SPECIAL PACKAGING INSTRUCTION

CODE ID	SPI NO. (TPO)
98747	F01-073-2313
	SHEET 1 OF 5

PART OR DRAWING NO.	NATIONAL STOCK NO.	CURRENT REV
2-21100-510	1560-01-073-2313 XE	A
ITEM NOMENCLATURE		ORIGINAL DATE
TIP, AIRCRAFT		13098

ILL. K. KNIGHTON
P.S. K. RESTORFF
CHK. R. TOMAC
AUTH. N. CORONADO

MILITARY PRESERVATION IAW MIL-STD-2073

SERVICEABLE METHOD: 10
UNSERVICEABLE METHOD: 10
QUP 001
ICQ 000
CLEANING & DRYING: IAW MIL-STD-2073
PRESERVATIVE: N/A

MARKING IAW MIL-STD-129

SPECIAL MARKINGS:
A) SPI NO. F01-073-2313
MARK THE SPI NUMBER ON THE IDENTIFICATION SIDE OF CONTAINER.
B) REUSABLE CONTAINER & DUNNAGE DO NOT DESTROY.

CLOSURE

LEVEL A: IAW: ASTM D6880
LEVEL B: IAW: ASTM D1974

PACKING AS SPECIFIED BELOW AND BILL OF MATERIALS

LEVEL	SPEC	STYLE	TYPE	CL	VRTY	GR	TR
A	ASTM D6880 (MOD)	4		2			B
B	ASTM D5118	FTC				V3c	

	LEVEL A	LEVEL B
GROSS CU FT	10.469	4.980
GROSS WT LBS	82	31
DESIGN FRAGILITY G	60	60

	LENGTH	WIDTH	DEPTH
CNTR I.D.			
LEVEL A:	51	32	5 3/4
LEVEL B:	49 1/2	30 1/2	5
CNTR O.D.			
LEVEL A:	54	33 1/2	10
LEVEL B:	50 5/8	31 5/8	5 3/8
ITEM DIM	45 1/8	26 3/8	2 1/4
ITEM WT.	12 LBS		

REVISIONS		
LTR	DESCRIPTION	DATE
A	UPDATED DIMENSIONS, ADDED DISTRIBUTION STATEMENT AND DESTRUCTION NOTICE	19133

DISTRIBUTION STATEMENT D: DISTRIBUTION AUTHORIZED TO DOD AND U.S. DOD CONTRACTORS ONLY, ADMINISTRATIVE OR OPERATIONAL USE, 06 MAY 2019. OTHER REQUESTS FOR THIS DOCUMENT SHALL BE REFERRED TO 406 SCMS/GULAA, (PACKAGING DIVISION), HILL AFB, UTAH 84056.

DESTRUCTION NOTICE: FOLLOW THE PROCEDURES IN DOD 5220.22-M, NATIONAL INDUSTRIAL SECURITY PROGRAM OPERATING MANUAL (NISPOM), SECTION 5-705, OR DOD 5200.1-R, INFORMATION SECURITY PROGRAM, CHAPTER VI. FOR UNCLASSIFIED, LIMITED DOCUMENTS, DESTROY BY ANY METHOD THAT WILL PREVENT DISCLOSURE OF CONTENTS OR RECONSTRUCTION OF THE DOCUMENT.

SPECIAL PACKAGING INSTRUCTION	CODE ID 98747	SPI NO. (TPO) F01-073-2313
ITEM NOMENCLATURE TIP, AIRCRAFT		SHEET 2 OF 5

P/N	QTY REQD	NOMENCLATURE OR DESCRIPTION	SIZE: (INCHES UNLESS SPECIFIED) TOLERANCES ON FRAC. ± 1/8, DECIMAL ± .10, ANGLES ± 1°	MATERIAL SPECIFICATION
-11	2	STRAPPING, STEEL (LVL A ONLY)	3/4 X 0.015 X AS REQUIRED	ASTM D3953 TYPE 1, RD, FIN. A
-10	A/R	TAPE, FILAMENT	3/4 X AS REQUIRED	ASTM D5330 TYPE I OR II
-9	A/R	TAPE, MASKING	1 X AS REQUIRED	ASTM D6123 TYPE I OR II 1
-8	A/R	WRAP	60 X 49	A-A-3174 TY. I, CL. 1, GR. A, FIN. 1 1
-7	1	CUSHIONING, END	26 X 4 1/2 X 2	A-A-59136 CLASS 1, GRADE A B
-6	1	CUSHIONING, END	26 X 17 X 2	A-A-59136 CLASS 1, GRADE A A
-5	1	CUSHIONING, SIDE	49 1/2 X 2 X 2	A-A-59136 CLASS 1, GRADE A
-4	2	CUSHIONING, TOP & BOTTOM	49 1/2 X 30 1/2 X 1	A-A-59136 CLASS 1, GRADE A
-3	2	PAD, TOP & BOTTOM	49 1/2 X 30 1/2 X 1/4	ASTM D4727 CF, DOM, DW, GRADE 200
-2	2	SKID	4 X 4 (NOM) X 33 3/8	ASTM D6199 CLASS 2
-1	2	LID, TOP & BOTTOM	52 1/2 X 33 1/2 X 3/8	A-A-55057 TYPE A

CAUTION NOTICES

NOTICE 1: ASSETS PACKAGED IN ACCORDANCE WITH PREVIOUS EDITIONS OF THIS SPI DO NOT REQUIRE REPACKAGING IF THE INTEGRITY OF THE SPI IS MAINTAINED.

NOTICE 2: SEE SPIRES FOR A COMPLETE LISTING OF NSN's ASSIGNED TO THIS SPI.

NOTICE 3: PACKAGING MATERIAL MAY BE SUBSTITUTED IF IT MEETS THE REQUIREMENTS OF MIL-STD-2073, PROVIDES EQUAL OR BETTER PROTECTION AND THERE IS NO INCREASED COST TO THE GOVERNMENT.

NOTICE 4: FOR LEVEL A PACKAGING REQUIREMENTS, LEVEL B PACKS SHALL BE OVERBOXED IN A LEVEL A SPECIFIED CONTAINER SHOWN ON PAGE 1 UNDER PACKAGING LEVEL A.

NOTICE 5: LEVEL A PROTECTION REQUIRED TO MEET THE MOST SEVERE WORLDWIDE SHIPMENT, HANDLING, AND STORAGE CONDITIONS. EXAMPLES OF SITUATIONS ARE: WAR RESERVE MATERIAL, MOBILIZATION, STRATEGIC AND THEATER DEPLOYMENT, OPEN STORAGE AND DECK LOADING. SECURITY ASSISTANCE ITEMS, INCLUDING FMS, ARE ESPECIALLY SUSCEPTIBLE TO DAMAGE DUE TO UNKNOWN AND UNFAVORABLE TRANSPORTATION, CLIMATIC, AND STORAGE CONDITIONS. PROVIDE LEVEL B PACKING UNLESS OTHERWISE DIRECTED BY THE PROCURING COUNTRY.

INTERNATIONAL STANDARDS FOR PHYTOSANITARY MEASURES
REVISION OF ISPM NO. 15
REVISION OF WOOD PACKAGING MATERIAL FOR INTERNATIONAL TRADE

THE FOLLOWING STATEMENT IS IN COMPLIANCE WITH THE UNITED NATIONS-IMPLEMENTED RESTRICTIONS ON WOOD PACKAGING MATERIAL (WPM). THIS REQUIREMENT IS SPECIFICALLY CONCERNED WITH INVASIVE SPECIES SUCH AS THE PINEWOOD NEMATODE. WPM IS DEFINED AS WOOD PALLETS, SKIDS, LOAD BOARDS, PALLET COLLARS, WOODEN BOXES, REELS, DUNNAGE, CRATES, FRAMES, AND CLEATS. THE STATEMENT BELOW CITES THE REQUIREMENTS IN DETAIL AND COVERS LUMBER FOR BUILDING CONTAINERS AND PALLETS USED FOR DELIVERIES, RESULTING IN SHIPMENTS WORLDWIDE (DIRECT, OR THROUGH AIR LOGISTICS CENTERS (ALC), CONTAINER CONSOLIDATION POINTS (CCP), OR OTHER BASES).

WOODEN LUMBER, WOODEN PALLET AND PACKAGING/CONTAINER STATEMENT:

ALL WOODEN LUMBER, WOODEN PALLETS, AND WOODEN CONTAINERS PRODUCED ENTIRELY OR IN PART OF WOOD PACKAGING MATERIAL (WPM) SHALL BE CONSTRUCTED FROM DEBARKED WOOD IN ADDITION TO THE APPLICATION OF HEAT-TREATED (HT) MATERIAL (HT TO 56 DEGREES CENTIGRADE OR 133 DEGREES FAHRENHEIT FOR 30 MINUTES). CERTIFICATION/MARKING IS REQUIRED BY AN ACCREDITED AGENCY RECOGNIZED BY THE AMERICAN LUMBER STANDARDS COMMITTEE (ALSC). FOR REFERENCE DOCUMENTATION, SEE LATEST REVISION OF "INTERNATIONAL STANDARDS FOR PHYTOSANITARY MEASURES (ISPM NO. 15), "REGULATION OF WOOD PACKAGING MATERIAL IN INTERNATIONAL TRADE."

NOTES

1. WRAP ITEM IN REF.-8 AND SECURE WITH REF.-9.

2. ILLUSTRATION IS FOR RIGHT HAND AND LEFT HAND WING TIPS.

SPECIAL PACKAGING INSTRUCTION	CODE ID 98747	SPI NO. (TPO) F01-073-2313
ITEM NOMENCLATURE TIP, AIRCRAFT		SHEET 4 OF 5

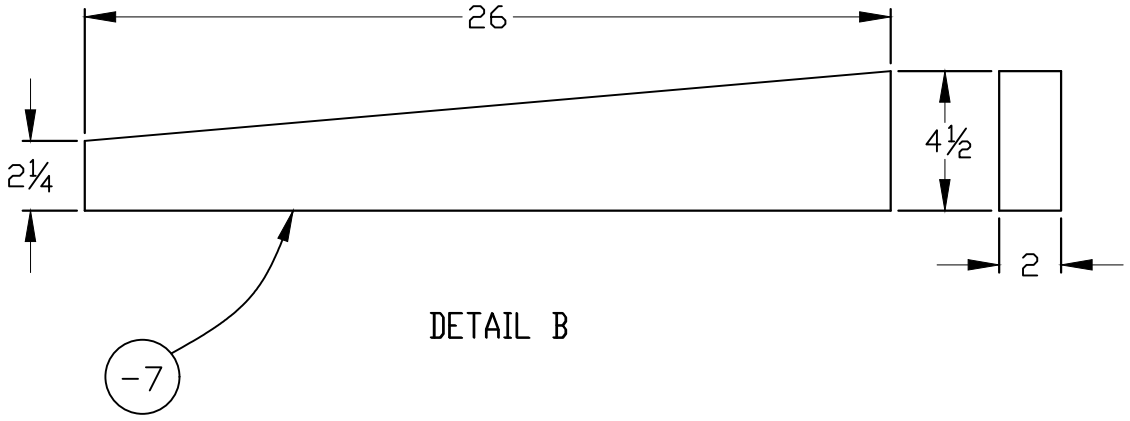

DETAIL B

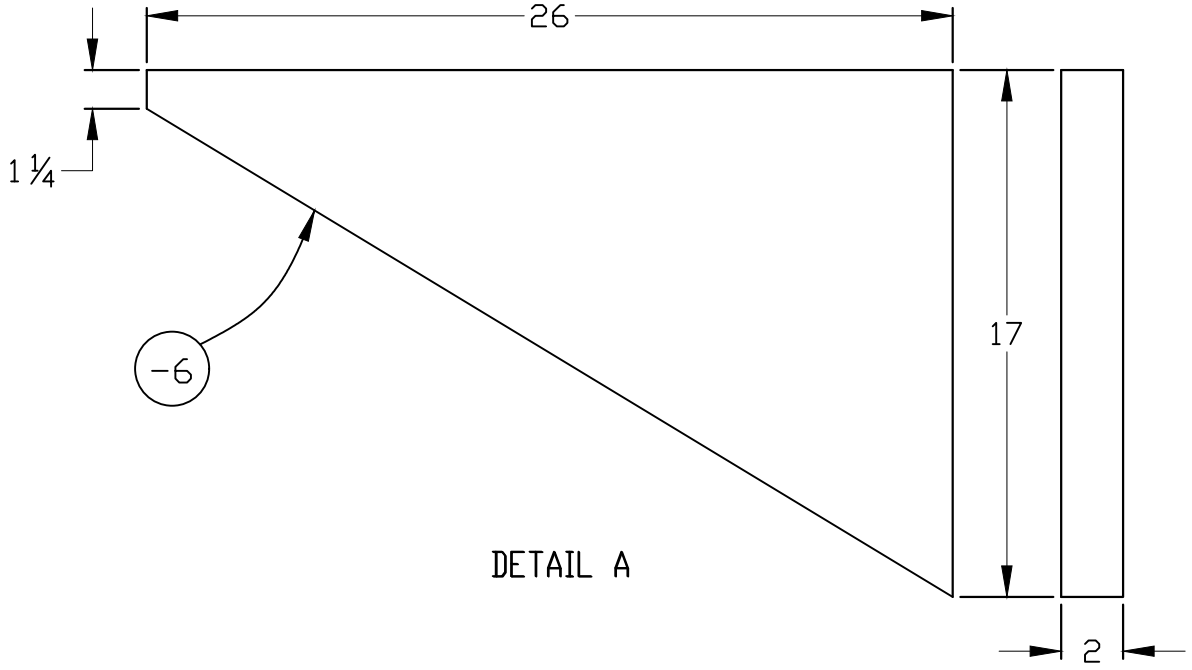

DETAIL A
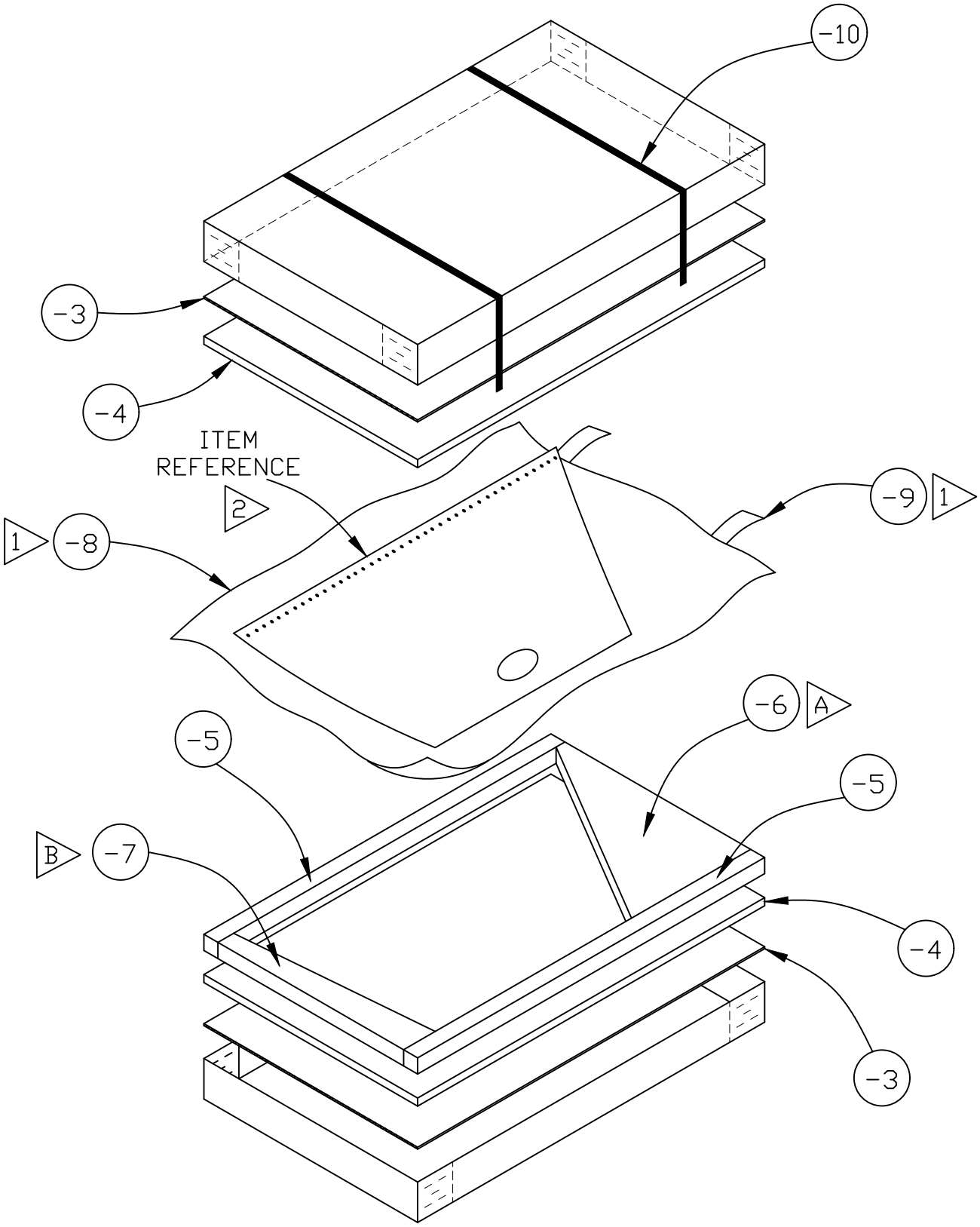
SPECIAL PACKAGING INSTRUCTION	CODE ID 98747	SPI NO. (TPO) F01-073-2313
ITEM NOMENCLATURE TIP, AIRCRAFT		SHEET 5 OF 5