NOT MEASUREMENT SENSITIVE

PD 77AESG-06-01A
29 June 2018

SUPERSEDING
PD 77AESG-06-01
10 July 2008

PURCHASE DESCRIPTION

BOOT, MAN'S, COMBAT, TEMPERATE WEATHER, AIR FORCE

This Purchase Description is approved for use by the Air Force and is available for use by all departments and agencies of the Department of Defense.

Prepared by
AFLCMC/WNU
1981 Monahan Way
Wright-Patterson AFB, OH 45433-7017

Comments, suggestions, or questions on this document should be addressed to
ASC/WNUV, Air Force Uniform Office Liaison at NSSC,
10 General Greene Ave., Natick Soldier Systems Center, Natick, MA 01760, or emailed to
donald.f.fleury.civ@email.mil.

AMSC N/A FSC 8430

DISTRIBUTION STATEMENT A: Approved for public release; distribution is unlimited.

1. SCOPE

1.1 Scope. This document covers the requirements for a boot, man's combat, temperate weather, Air Force to be worn by male personnel of the U. S. Air Force.

1.2 Classification. The boots shall be of the following sizes and types, as specified (see 6.2):

1.2.1 Sizes. The boot shall be in the following whole and half sizes and widths:
3 through 15 inclusive and whole size 16:
Widths N, R, W, XW, (B, D, EE, and EEEE). (Ex. Men's: 10R,).

1.2.2 Types.
Type I – Coyote 498
Type II – Air Force Sage Green 1641

2. APPLICABLE DOCUMENTS

2.1 General. The documents listed in this section are specified in sections 3 and 4 of this purchase description. This section does not include documents cited in other sections of this purchase description or recommended for additional information or as examples. While every effort has been made to ensure the completeness of this list, document users are cautioned that they must meet all specified requirements cited in sections 3 and 4 of this purchase description, whether or not they are listed.

2.2 Government documents.

2.2.1 Specifications, standards, and handbooks. The following specifications, standards, and handbooks form a part of this purchase description to the extent specified herein. Unless otherwise specified, the issues of these documents are those cited in the solicitation or contract.

COMMERCIAL ITEM DISCRIPTIONS

A-A-55093	Laces, Footwear

DEPARTMENT OF DEFENSE SPECIFICATIONS

MIL-C-41814	Counter, Footwear
MIL-DTL-32075	Label: For Clothing, Equipage, and Tentage (General Use)
MIL-PRF-3122	Leather, Cattlehide, for Footwear for Uppers and Gussets, Chrome Tanned Fatliquored
MIL-W-17337	Webbing, Textile, Woven Nylon

(Copies of these documents are available online at http://quicksearch.dla.mil.)

2.2.2 Other Government documents, drawings, and publications. The following other Government documents, drawings and publications form a part of this document to the extent specified herein. Unless otherwise specified, the issues are those cited in the solicitation or contract.

DRAWINGS

Defense Logistics Agency (DLA) Troop Support

2-1-1635 Speed Lace Assembly

(Copies of this document are available from the DLA Troop Support, 700 Robbins Avenue, Philadelphia, PA 19111-5096.)

ENVIRONMENTAL PROTECTION AGENCY

Regulations for the Enforcement of the Federal Insecticide, Fungicide and Rodenticide Act (40 CFR Part 162)

(Copies are available online at http://www.epa.gov.)

RULES AND REGULATIONS

ENVIRONMENTAL PROTECTION AGENCY (EPA)

Office of Pesticide Programs List of Chemicals Evaluated for Carcinogenic Potential

(Copies of this document available from lormand.mary-jean@epa.gov.)

2.3 Non-Government documents. The following other documents form a part of this document to the extent specified herein. Non-Government standards and other publications are normally available from the organizations that prepare or distribute the documents. These documents also may be available in or through libraries or other informational services. Unless otherwise specified, the issues of these documents are those cited in the solicitation or contract.

THE AMERICAN ASSOCIATION OF TEXTILE CHEMISTS AND COLORISTS (AATCC)

AATCC 22	Water Repellency: Spray Test
AATCC 127	Water Resistance: Hydrostatic Pressure Testing

(Copies of the AATCC Technical Manual are available online at http://www.aatcc.org.)

ASTM INTERNATIONAL

ASTM D297	Standard Test Methods for Rubber Products – Chemical Analysis
ASTM D412	Standard Test Methods for Vulcanized Rubber and Thermoplastic Elastomers – Tension
ASTM D471	Standard Test Method for Rubber Property – Effect of Liquids
ASTM D624	Standard Test Method for Tear Strength of Conventional Vulcanized Rubber and Thermoplastic Elastomers
ASTM D751	Standard Test Method for Coated Fabrics
ASTM D1052	Standard Test Method for Measuring Rubber Deterioration – Cut Growth Using Ross Flexing Apparatus

ASTM D1777	Standard Test Method for Thickness of Textile Materials
ASTM D2208	Standard Test Method for Breaking Strength of Leather by the Grab Method
ASTM D2240	Standard Test Method for Rubber Property – Durometer Hardness
ASTM D3273	Standard Test Method for Resistance to Growth of Mold on the Surface of Interior Coatings in an Environmental Chamber
ASTM D3574	Standard Test Methods for Flexible Cellular Materials – Slab, Bonded, and Molded Urethane Foams
ASTM D3575	Standard Test Methods for Flexible Cellular Materials Made from Olefin Polymers
ASTM D3776/ D3776M	Standard Test Method for Mass Per Unit Area (Weight) of Fabric
ASTM D3787	Standard Test Method for Bursting Strength of Textiles – Constant-Rate-of-Traverse (CRT) Ball Burst Test
ASTM D3886	Standard Test Method for Abrasion Resistance of Textile Fabrics (Inflated Diaphragm Apparatus)
ASTM D4786	Standard Test Method for Stitch Tear Strength, Single Hole
ASTM D4966	Standard Test Method for Abrasion Resistance of Textile Fabrics (Martindale Abrasion Tester Method)
ASTM D5963	Standard Test Method for Rubber Property-Abrasion Resistance (Footwear Abrader)
ASTM E96	Standard Test Methods for Water Vapor Transmission of Materials
ASTM F392	Standard Test Method for Flex Durability of Flexible Barrier Materials

(Copies of these documents are available online at http://www.astm.org.)

SATRA TECHNOLOGY CENTRE FOOTWEAR TECHNOLOGY TEST METHODS

SATRA STD 184H	Whole Shoe Flexing Machine (testing high leg boots)
SATRA STD 185/S or 185	Sole Adhesion Tester
SATRA TM2	Tensile Properties of Insole Materials
SATRA TM3	Flexing Index
SATRA TM31	Abrasion Resistance – Martindale Method
SATRA TM64	Compression Set – Constant Stress Method
SATRA TM77	Flexing Machine – Water Penetration Test
SATRA TM80	Transverse Tensile Strength of Sheet Materials
SATRA TM83	Measurement of The Area Shape Retention and Collapsing Load of Formed Toe Puff and Stiffener Materials
SATRA TM98	Dimensional Stability with Changes in Atmospheric Humidity
SATRA TM101	Surface Peel Strength of Inside Materials
SATRA TM144	Friction (Slip resistance) of Footwear and Floorings
SATRA TM223	Floor Marking by Solings or Top Pieces

(Applications for copies of SATRA Test Methods may be obtained online at

http://www.satra.co.uk)

AMERICAN NATIONAL STANDARDS INSTITUTE/AMERICAN SOCIETY FOR QUALITY CONTROL (ANSI/ASQ)

ANSI/ASQ Z1.4 Sampling Procedures and Tables for Inspection by Attributes

(Copies of this document are available online at http://www.asq.org.)

NATIONAL FIRE PROTECTION ASSOCIATION 1971 (NFPA 1971)

Standard on Protective Ensembles for Structural Firefighting and Proximity Fire Fighting (2007 Edition)

(Application for a copy of this document may be obtained online at http://www.nfpa.org.)

INFORMA HEALTHCARE (PUBLISHER)

Principles and Methods of Toxicology (fourth edition), 2001; Wallace Hayes (editor); Repeat Insult Patch Test, pp 1057 – 1060

(Copies of this document are available online at http://www.taylorandfrancis.com/.)

INTERNATIONAL ORGANIZATION FOR STANDARDIZATION (ISO)

ISO 11664-2 Colorimetry – Part 2: CIE (International Commission on Illumination) Standard Illuminants

(Copies of this document may be obtained online at http://www.iso.org/iso/home/standards.htm.)

2.4 Order of precedence. In the event of a conflict between the text of this purchase description and the references cited herein, the text of this purchase description takes precedence. Nothing in this purchase description, however, supersedes applicable laws and regulations unless a specific exemption has been obtained.

3. REQUIREMENTS

3.1 First article. When specified (see paragraph 6.3) samples shall be subjected to first article inspection in accordance with the contract or solicitation (see 4.2).

3.2 Recycled, recovered or environmentally preferable or bio-based material. Recycled, recovered, environmentally preferable, or bio-based materials should be used to the maximum extent possible, provided that the material meets or exceeds the operational and maintenance requirements, and promotes economically advantageous life cycle costs.

3.3 Boot design and construction. The boot shall be constructed of cattle-hide or equal (see 6.5) for the upper leather and shall have nylon quarters and a nylon gusset, a closed cell comfort collar, a backstay and an ankle reinforcement strap (see Figures 1 and

2). The boot shall weigh less than 2.5 pounds per boot for a Size 10 R. The outside leather areas shall be flesh out, the inside eyelet stays shall be grain out. The boot shall have a partial speed-lace closure system design, with “V” notch, and removable cushion inserts (see Figures 1 and 2). The boot shall be manufactured using direct molded sole (DMS), welt, stitch-down, or injected molded process and shall be capable of being resoled throughout its lifecycle. The color of the leather and all other components shall be a good match to the type color (1.2.1) selected. The color of the rubber sole, cushion midsole, solid midsole, and toe and heel caps shall be a good match to the type color (1.2.1) selected. The Air Force Sage Green 1641 standard sample for color shade and leather appearance shall be a swatch of cattle-hide leather matching the sage green present in the Air Force approved digital tiger-stripe camouflage print. The Coyote cattle-hide sample swatches shall match the established Coyote 498, Roll #3898 Leather, Color Chip #20150 and visible fabrics Coyote 498 Roll #3894 Cloth, Duck, Nylon 1000D shade color standards. All upper materials visible to the wearer shall be a good match the color of the leather. Component materials shall not vary in their color or appearance, and shall be non-toxic. Materials shall be free of non-removable spots, stains, or other foreign matter effecting appearance.

3.3.1 Upper leather. The leather shall be breathable, waterproof, flame resistant, flesh out drum dyed with type color selected (see 1.2.1) penetrating throughout the thickness of the hide. The leather for the vamps, outside counter-pockets, ankle reinforcements and inside eyelet stays shall conform to MIL-PRF-3122, Type I, Treatment A/B. The upper leathers shall have the following exceptions to MIL-PRF-3122:

a. The flesh surface shall be sueded as to produce a fine uniform nap.
b. The grain surface shall be lightly buffed to remove the surface of the grain only
c. The finish requirements for the leather shall not apply.
d. The thickness shall be as specified for the cut parts in Table IX.

3.3.2 Insoles. The insole shall meet the requirements specified in Table I.

Table I. Insole performance requirements.

Characteristics	Physical Requirements
Thickness, inches (min) (all constructions)	0.090
Fungal Resistance, rating scale level (0-10)	Level 10

Table I. Insole performance requirements – continued.

Characteristics	Physical Requirements
Wet Tensile, kgf/cm2 (min) Flexing Index, cycles (min)	70 3.7 (5000)
Abrasion Resistance Non-Woven board, revs(min) Dry Wet	 25,600 6400
Transverse Tensile-Dry, kgf/cm2 (min)	8
Dimensional Stability, % (max)	0.7
Peel Strength, kgf/cm2(Min)	0.5

3.3.3 Fabrics.

3.3.3.1 Bootie lining. The bootie lining shall be constructed from pattern pieces cut from waterproof three-layer laminate material.

3.3.3.1.1 Three-layer laminate. The three-layer laminate lining shall consist of a textile face, a waterproof film, and a tricot knit cloth. The package shall conform to the requirements in paragraphs 3.3.3.1.1.2, 3.3.3.1.1.3 and 3.3.3.1.1.4. The three-layer laminate shall conform to the requirements specified in Table II, when tested as specified in paragraph 4.4.1.

3.3.3.1.1.2 Face layer. The color of the face side shall be approximately gray herringbone or equal, based on Government approval. The face shall consist of a textile layer that meets the Martindale Abrasion and Burst Strength performance criteria listed in Table II, when tested as specified in paragraph 4.4.1.

3.3.3.1.1.3 Waterproof film. The waterproof film shall be polytetrafluorethylene, microporous.

3.3.3.1.1.4 Tricot knit. The tricot knit cloth shall be nylon. The weight shall be 1.0 (± .10) ounce per square yard. The color shall be natural.

3.3.3.2 Adhesive. The adhesive for laminating the layers together shall be such that the laminate cloth will meet the requirements of this specification. The adhesive shall have no adverse health hazard when used as intended.

3.3.3.3 Laminated cloth. The single layer package specified in 3.3.3.1.1.1 shall be laminated to one side of the waterproof film and the tricot knit cloth shall be laminated to the other side of the waterproof film. The cloth shall conform to the requirements specified in Table II, when tested as specified in 4.4.1.

Table II. Laminated Cloth Performance Requirements.

Characteristics	Requirements
Martindale Abrasion Fabric Only; Dry, revs/cycles (min)	153,600 revs per 9,600 cycles
Bursting Strength Fabric Only, lbf (min)	 125
Hydrostatic Resistance (psi) (min) Liner cloth (initial) At Seam After Synthetic Perspiration After Diesel Fuel Oil	 50 50 50 50
Water Permeability/ Resistance Liner cloth (initial) At Seam After Synthetic Perspiration After Diesel Fuel Oil	 no leakage no leakage no leakage no leakage
Abrasive Durability Back/leather side (cycles to leak)	 600 cycles; no leakage
Moisture Vapor Transmission Rate, (min) (MVTR) (g/m2/24 h) B method BW method	 640 4,000
Flex Durability, (min) Gelbo (cycles to leak) Wet (hrs to leak) Wet (hrs to delamination)	 3,000 cycles; no leakage 24 96

3.3.3.4 Binding tape. Binding tape shall be used on all exposed edges of the 1000 denier nylon material. The color shall be a good match to the type color selected (1.2.1) and shall be a good match to the leather of the standard sample (see 3.3). The binding tape shall be bound to the nylon fabric for the life of the item, and shall not affect footwear comfort or overall item performance.

3.3.4 Comfort top band. The comfort top band shall have a length equal to the circumference of the boot top, exclusive of the gusset/tongue, and shall provide the necessary padding for user comfort. The band width shall be 1 inch wide ± 1/4 inch of equal height around the top of the boot as shown in Figures 1 and 2. The padding shall not absorb liquids, shall not be susceptible to hydrolysis, shall have a compression set such that comfort is provided for the life of the item and shall not promote fungal or bacterial growth. The material for the exterior of the comfort top band shall match the requirements of 3.3.5.

3.3.5 Gusset and quarter side panels. The gusset and quarter side panels shall be 100% nylon 6.6 or equal; 2x2 basket weave; 140 filaments per inch of 1,000 denier in both

warp and filling direction; weighing 13.7 (± 1.3) oz/sq yd. The color shall be a good match to the type color selected (1.2.1) matching that of the standard sample (see 3.3). The material shall be fungal resistant, water resistant and backed with a polytetrafluorethylene, microporous membrane. The two-layer material shall conform to the physical requirements listed in Table III when tested as specified in paragraph 4.4.1. Tear strength of the material shall be such that normal use and wear does not cause undue damage to the quarter panels. The top of the backstay shall be folded over the quarter side panels, stitched and shall have a clean finished appearance. Construction of the end item shall be such that the seam strength between the 1000-denier nylon and all other components is acceptable for the life of the item.

TABLE III. Gusset and quarter side panel fabric requirements.

Characteristics	Requirement
Weight, oz/sq yd	13.7 (±1.3)
Water Repellency, grade	90, 90, 90r
Moisture Vapor Transmission, g/m²/24 h	Not less than 500
Tear Strength, lbs (min)	34

3.3.5.1 Spectral reflectance. The reflectance values for nylon gusset and quarter side panels shall meet the requirements listed below in Table IV and tested as specified in 4.4.2.

TABLE IV. Spectral reflectance requirements.

Wavelengths Nanometers	**Type Color Selected**	
	Min	**Max**
600	13	23
620	13	23
640	14	24
660	14	26
680	12	32

TABLE IV. Spectral reflectance requirements - continued.

Wavelengths Nanometers	Type Color Selected	
	Min	Max
700	18	38
720	20	42
740	24	44
760	26	46
780	29	52
800	34	57
820	36	62
840	38	63
860	40	64

3.3.6 Backstay tape. The backstay strap shall be cut from 1-inch wide nylon webbing conforming to MIL-W-17337, class 1 or 2. The webbing shall be a good match to the type color selected (1.2.1)

3.3.7 Box toe. The box toe material shall be a laminate of 0.020 (± 0.002) inch virgin ionomer resin (surlyn) sandwiched between two layers of non-woven polyester saturated with polystyrene. The total thickness shall be 0.056 (± 0.005) inch. The box toes shall be skived 3/8 (± 1/8) inch wide at the breast. A thermoplastic box toe may be used and shall conform to the performance requirements of Table V.

3.3.8 Counters. The boot shall be constructed such that the counters minimize “hot spots” or blisters to the user. The counter shall conform to fit the last used and fill the counter pocket area. The counters shall meet the requirements of MIL-C-41814. The requirement for single-hole tear strength is eliminated. As an alternative, counters manufactured from leather board need not meet the chemical requirements of MIL-C-41814 but must meet the fungicide requirements of MIL-PRF-3122. Skiving of the counters shall be in accordance with commercial practice.

3.3.8.1 Counters (alternate)/Box Toe (Alternate). An extruded thermoplastic film sandwiched between fusion bonded non-woven fabric made from a blend of synthetic fibers and impregnated with a styrene copolymer and coated on each side with a thermoplastic adhesive may be used. A thermoplastic counter may be used and shall conform to the requirements of Table V.

Table V. Counter requirements.

Characteristics	Requirement
Initial Collapsing Load (N)	130
Resilience (%) (% retention of initial collapsing load after ten collapses)	25

Table V. Counter requirements – continued.

Characteristics	Requirement
Moisture Resistance (%) (% retention of initial dry collapsing load after one hour immersion)	80
Area Shape Retention (%) Initial 10th collapse	 85 60

3.3.9 Shank. The steel or fiberglass shanks shall be bonded to the insole and shall conform to the shape of the last. The fiberglass shank (glass and resin area), when cured, shall be 5/8 (± 1/16) inch in width. The steel shank shall be constructed from 19 gauge, cold rolled carbon steel with a hardness ranging from 47 to 54 Rockwell C scale. The width of the steel shank shall be 5/8 (± 1/32) inch for boot sizes 3 through 6-1/2 (all widths), 7 through 8-1/2 N, and all R widths. For all other sizes and widths, the steel shank width shall be 1 (± 1/32) inch. The shank shall be made with two ribs for the 5/8 inch width and three ribs for the 1 inch width.

3.3.10 Eyelets and speed laces. There shall be a minimum of two pair of bottom eyelets, size AA at the base of the eyelet/speed lace assembly. (See Figures 1 & 2) The eyelets and speed laces shall be brass with a nylon subdued finish, and shall be a good match to the type color selected of the leather standard sample (see 3.3). The nylon subdued finish shall be durable enough to remain on the eyelets and speed laces for the life of the item. The eyelets and speed laces shall not rust, tarnish, or otherwise change the subdued finish color for the life of the item. Eyelet attachment shall be such that they remain permanently fixed to the upper. Adjustments shall be made such that all sizes allow users to easily use the speed lace system and that proper closure of the boot is achieved. Speed loops and eyelets shall be equally spaced on the eyelet stays to allow proper lacing and cinching of the boot for donning and doffing and shall have the same alignment between both rows.

3.3.11 Speed lace configuration and assembly. The speed lace assembly shall be in accordance with drawing 2-1-1635 and the subdued finish color shall last for the life of the boot. Eyelet and speed lace attachment shall be such that they remain permanently fixed to the upper. Adjustments shall be made such that all sizes allow users to easily utilize the speed lace system and proper closure of the item is achieved. Speed laces and eyelets shall be equally spaced on the eyelet stays to allow proper lacing and cinching of the boot for donning and doffing, and shall have the same alignment between both rows. The speed laces shall be placed in a position so they do not cause hot spots, blisters, or other irritation for the wearer.

3.3.12 Quarter foam. There shall be quarter foam, 3/16 (± 1/32) inch thick, located next to the bootie lining. The foam shall cover the counter area and extend upward to within two inches from the top of the boot.

3.3.13 Midsole. The midsole for use with stitch-down and welt constructions shall be 4 (- 1/2 to +1 iron), in the type color selected, oil resistant, and shall meet the requirements of Table VI. The DMS construction midsole (base sole) shall be 1/4 (±1/16) inch, measured from the top of welt line to the bottom of the midsole. The color shall be a good match to the boot type color selected of the leather standard sample (see 3.3).

3.3.14 Cushion midsole. The midsole shall provide the necessary stability, durability, and overall performance of the item and shall meet the requirements specified in 3.3.14.1. The color shall be a good match to type color selected (1.2.1) of the standard sample (see 3.3).

3.3.14.1 Cushioned midsole polyether polyurethane requirements. The requirements for the pure polyether polyurethane are based on testing done on slabs and are not actual midsoles. The requirements shall be as specified in Table VI, when tested as specified in Table XI.

Table VI. Polyether polyurethane physical requirements.

Characteristics	Minimum	Maximum
Density, gm/cc	0.40	0.60
Hardness (Shore A)	50	75
Tensile strength, kgf/cm^2	25	—
Elongation (%)	250	—
Tear strength, kg/cm Die T	3.7	—
Volume swell, % w/IRM Oil #3 (@ 24 h)	—	10
Compression Set, %	—	20
Ross flex (% @ cycles) (1 x 6 inch) @ -5oC	—	900 @ 150,000

3.3.15 Outsole. The outsole design shall be the Quabaug Vibram 360-Degree Lug Model 1340 design or an equal Government approved design with equivalent durability (see Figure 3). The color shall be a good match to the type color (1.2.1) selected. The outsole shall be a minimum of 18-iron (9.5mm) in thickness of solid rubber throughout, including any of the lugs, and meet the requirements of 3.3.15.1. The color of the Vibram identification plug shall be a good match to the type color selected, matching that of the standard sample (see 3.3).

3.3.15.1 Rubber compound requirements. The requirements for the rubber outer-soles are based on the testing performed on 0.250 or 0.070 gauge inch test slabs (in accordance with ASTM procedures) and are not actual soles. There may be some deviation on actual outer-soles or midsoles based on style thickness and curing parameters. The requirements shall be as specified in Table VII, when tested in accordance with paragraph 4.4.1.

Table VII. Rubber compound (outsole) requirements.

Characteristics	Outsole
DIN abrasion, max	180
Hardness (Shore A durometer)	57-67 A
Stitch Tear (Dry), lbs min	300
Stitch Tear (Fuel B), lbs min	50
Tear strength, Die C, lbs min	250
Ross flex, IRM Oil #3, (% max @ flexes)	250 @ 50,000
Volume swell, Fuel B (@ 46 h), % max	70
Non-marking	Pass
Tensile, lbs min	2,100
Elongation, % min	400
Cold Flex (@ -23°C) (% min @ flexes)	500 @ 7,500
Transitional Hardness (2 h @ -23°C)	Max change ± 10 point above
Slip Index, min	
Cold/Ice - Rough ice method	0.20
Quarry Tile, Wet	0.50

3.3.16 Bond strength. The bond achieved between any of the bottoming layers (midsole, cushion midsole, and outsole) to include the boot upper shall be permanently resistant to any delamination.

3.3.16.1 Entire sole to upper (DMS and including injection molded process). The bond strength (at the ball) shall not be less than 130 pounds. Test shall be performed on the end item as specified in paragraph 4.7.4. When 5 end items are tested, no more than one test item may fall below 130 pounds, and no values shall fall below 110 lbs.

3.3.16.1.1 Solid midsole to cushion midsole bond strength. The solid rubber midsole or base sole to cushion midsole bond strength shall be not less than 100 pounds when tested as specified in paragraph 4.7.1. The test shall be performed on the end item.

3.3.16.1.2 Outer-sole to cushion midsole bond strength. The outer-sole to cushion midsole strength shall not be less than 100 pounds when tested as specified in paragraph 4.7.1. The test shall be performed on the end item. When 5 end items are tested, no more than one test item may fall below 100 pounds. No recorded values shall fall below 80 pounds. The components of the sole shall be layered in such a manner that the specified bond strengths will be achieved regardless of the type of sole construction (i.e. 3 layer or injected molded process). If test results are less than specified due to failure of bond strength between layers, the end item shall fail.

3.3.16.2 Adhesion at toe (DMS). The bond strength at the toe area of the sole shall not be less than 50 pounds, with the exception that one specimen out of the five tested may

be below 50 pounds, but not less than 40 pounds. Testing shall be as specified in paragraph 4.7.5

3.3.17 Removable cushion insert. The removable cushion insert shall be a low-density polyurethane heel cup support made of a polyurethane system, black in color, and molded to a cloth, black, or the type color (1.2.1) selected. The fabric top cover shall meet the abrasion and bursting strength performance requirements in Table VIII. Cushioned inserts shall be properly mated to the item with the last used in the manufacturing of the item. Cushion inserts shall be mated, by size, to the correct size boots and shall be uniform. The removable cushion insert shall meet the following requirements when tested in accordance with Table VIII when tested in accordance with 4.7.4.

Table VIII. Removable cushion insert requirements.

Characteristics	Physical Requirements
Density, lbs/cu ft	16-20
Thickness (inches) Forward of the instep (min) Elsewhere (min)	 0.100 0.220
Foam Hardness, Shore 00	55-65
Tensile strength, psi	more than 80
Compression set (%) @ 25%	less than 5
Compression set (%) @ 50%	less than 5
Fabric Top Cover, (rev/cycles, min) Martindale Abrasion: Fabric Only; Dry	153,600 /9,600
Bursting Strength, lbf (min) Fabric Only	 125

3.3.18 Whole boot Moisture Vapor Transmission Rate (MVTR). The whole boot breathability shall not be less than 3.5 grams/hour when tested in accordance with paragraph 4.7.3. Three boots shall be tested. The average whole boot MVTR from the 3 boots tested shall be equal to or greater than 3.5 grams/hour.

3.3.19 Laces. The laces shall conform to Type III, class 1 of A-A-55093. The color shall be a good match to the leather standard (see 3.3) type color selected (1.2.1). The length of the laces shall be a minimum of 72 inches long for sizes 3 thru 6-1/2, 87 inches for sizes 7 thru 11, and 97 inches for sizes 11-1/2 thru 16.

3.3.20 Thermal protection. The boots shall be tested for flame, heat, and liquid penetration resistance as specified in paragraph 4.4.6.

3.3.20.1 Flame resistance. The boots shall meet the Flame Resistance Test Four requirements of NFPA 1971, Standard on Protective Ensemble for Structural Firefighting, 2007 Edition. The areas of the boot to be tested are in accordance with Figure 8-5.5.2 of NFPA 1971; however, a sixth area is added to include the nylon quarter side panels and the

results to be included in the test report. The requirement that the boot shall not melt or drip does not apply, although the boot shall not exhibit any burn-through (reference: Sections 7-10.1 and 8.5.5). The boot will be considered to have failed the burn-through test when burn-through is observed through all layers of the quarter panel and lining components. The rubber outsole is not subject to the flame resistance requirements.

3.3.20 2 Upper heat resistance. The boots shall meet the Thermal Conductive Heat Resistance Test One requirements of NFPA 1971, Standard on Protective Ensemble for Structural Firefighting, 2007 Edition (NFPA 1971, section 7-11).

3.3.20.3 Sole heat resistance. The boots shall meet the Thermal Conductive Heat Resistance Test Two requirements of the NFPA 1971, Standard on Protective Ensemble for Structural Firefighting, 2007 Edition (NFPA 1971, section 7-12).

3.3.20.4 Liquid penetration resistance. The boots shall meet the Liquid Penetration Resistance Test requirements of the NFPA 1971, Standard on Protective Ensemble for Structural Firefighting, 2007 Edition (NFPA 1971, section 7.10.4, and tested per section 8-28, specific testing to #4, surrogate gasoline fuel C, as defined in ASTM D471, standard test method for rubber properties, effect of liquids, using a 50% percent by volume of the toluene and iso-octane).

3.4 Design. The height of the finished boot, measured from the bottom of the heel tread to the top of the back of the boot, shall be 10 ± ½ inches on size 10 R and shall graduate up and down between sizes and widths. See para 4.4.6.

3.5 Lasts. The boots shall be made on a last specifically designed for men. The numerical size of the boot shall correspond with numerical size of the last used to produce the boot (i.e. a size 10R boot shall be produced on a size 10R last). Last design shall accommodate for the cushion insert that will be used with the men's end item.

3.6 Construction.

3.6.1 Cutting uppers. The leather shall conform to the requirements of MIL-PRF-3122 and the thickness specified in Table IX. With the exception of the eyelet stays, none of the upper parts shall be split or shaved. Vamps shall be cut from the bend area of the side leather. The inside eyelet stays shall be placed grain side exposed.

Table IX. Required thickness of leather uppers (ounces).

Part	Minimum	Maximum
Vamp	5	6
Outside Counter Pocket	4	6

Table IX. Required thickness of leather uppers (ounces) - continued.

Part	Minimum	Maximum
Eyelet stay	3	4
Ankle Reinforcement	4	6

3.6.2 Skiving. Skiving of upper leather parts is permitted. Skiving of the top edge of the outside counter-pocket shall not be permitted.

3.6.3 Boot finishing. Top finishing shall not be used.

3.7 Leakage. The finished boots shall be tested for leakage as specified in paragraph 4.7.2.

3.8 Marking, permanent identification. The Contractor shall permanently mark the correct size, width, and contract number (Example: 04-D-1234) on the inside of the gusset/tongue area. The marking may be in the form of a label and shall be done in accordance with acceptable commercial practices, and it shall not reduce footwear functionality. The boot shall contain a manufacturing tracking lot number and the wording “AF Safe to Fly” on the label. Unit packs will include NSN and UPC bar codes as specified in the contract. Each symbol must be human and scanner readable.

3.8.1 Instruction/label tag. The instruction/label tag shall be tied to the finished boots, and the print size shall be 1/8 (±1/32) inch. The instruction/label tag shall be printed using the data specified in Figure 4. Each item shall be individually bar-coded with a Type VIII, Class 17, label/tag of MIL-DTL-32075. The bar-coding element shall be a 13 digit national stock number (NSN). The bar-code type shall be a medium to high code density. It shall be located so that it is completely visible on the item when it is packaged as specified in the contract and in a manner that causes no damage to the item. As an option, a hang tag identifying the features of the boot is permitted.

3.9 Toxicity. The finished boot shall not present a health hazard and shall show compatibility with prolonged, direct skin contact when tested as specified in 4.4.3. If requirement can be demonstrated with historical use data, toxicity testing may not be required (see 6.3). Chemicals recognized by the Environmental Protection Agency (EPA) as human carcinogens shall not be used.

3.10 Workmanship. The finished boots shall conform to the quality of product established by this document. The occurrence of defects shall not exceed the contractor's own quality assurance standards or affect proper function or appearance of the boot.

4. VERIFICATION

4.1 Classification of inspections. The inspection requirements specified herein are classified as follows:

a. First article inspection (see 4.2).
b. Quality conformance inspection (see 4.4).

4.2 First article inspection. When a first article is required (see 3.1 and 6.3), it shall be as specified for compliance with design, construction, workmanship, and dimensional requirements. The presence of excessive defects, as specified in 4.4.5, or failure to pass any test shall be cause for rejection of the first article.

4.3 Component and material inspection. Components and materials shall be inspected in accordance with all the requirements of referenced specification, drawings, and standards unless otherwise excluded, amended modified or qualified in this purchase description.

4.3.1 Component testing. In addition to any testing required by 4.4.6, components listed in Table XI shall be tested for the characteristics noted. The lot shall be unacceptable if one or more sample units fail to meet any test requirement specified. The sampling plan for required component testing shall be as follows:

Table X. Sampling for required component testing.

Lot size (units)	Sample size
Less than 800	2
800 to 22,000	5
22,001 and above	8

4.4 Quality conformance inspection. Conformance inspection shall consist of all examinations and tests of this purchase description

4.4.1 Conformance inspection sampling. Unless otherwise specified, sampling for inspection shall be performed in accordance with ANSI/ASQC Z1.4.

Table XI. Component tests.

Material	Characteristic	Requirement	Test Method
Upper Leather	Water absorption, penetration, stain resistance	3.3.1	MIL-PRF-3122
Insoles	Thickness (all constructions)	3.3.2	ASTM D1777 17/
	Fungal resistance	3.3.2	ASTM D3273
	Wet tensile	3.3.2	SATRA TM2
	Flexing Index	3.3.2	SATRA TM3
	Abrasion Resistance		
	Non-Woven board (Wet)	3.3.2	SATRA TM31
	Non-Woven board (Dry)	3.3.2	SATRA TM31
	Transverse Tensile-Dry	3.3.2	SATRA TM80
	Dimensional Stability	3.3.2	SATRA TM98
	Peel Strength	3.3.2	SATRA TM101

Table XI. Component tests – continued.

Material	Characteristic	Requirement	Test Method
Face Layer Fabric	Martindale Abrasion Fabric Only; Dry	3.3.3.3	ASTM D4966 1/
	Bursting Strength Fabric Only	3.3.3.3	ASTM D3787
Three-layer laminate lining			
-Hydrostatic Resistance (psi)	Liner cloth (initial)	3.3.3.3	ASTM D751 2/
	At Seam	3.3.3.3	ASTM D751 3/
	After Synthetic Perspiration	3.3.3.3	ASTM D751 4/, 5/, 6/
	After Diesel Fuel Oil	3.3.3.3	ASTM D751 6/, 7/
-Water Permeability/ Resistance	Liner cloth (initial)	3.3.3.3	AATCC 127 8/
	At Seam	3.3.3.3	AATCC 127 8/, 9/
	After Synthetic Perspiration	3.3.3.3	AATCC 127 5/, 6/, 8/, 10/
	After Diesel Fuel Oil	3.3.3.3	AATCC 127 16/, 18/, 11/
-Abrasive Durability	Back/leather side (cycles to leak)	3.3.3.3	ASTM D3886 AATCC 127
-Moisture Vapor Transmission Rate (MVTR) ($g/m^2/24$ h)	B method	3.3.3.3	ASTM E96 13/
	BW method	3.3.3.3	ASTM E96 14/
-Flex Durability	Gelbo (cycles to leak)	3.3.3.3	ASTM F392; AATCC 127 8/,15/
	Wet (hrs to leak) and (hrs to delamination)	3.3.3.3	ASTM F392; AATCC 127 16/, 8/
Gusset and Quarter Side Panel	Weight	3.3.5	ASTM D3776
	Water repellency	3.3.5	AATCC 22
	Moisture Vapor Transmission	3.3.5	ASTM E96
	Tear Strength	3.3.5	ASTM D4786
	Spectral Reflectance	3.3.5.1	4.3.2
Counter	Range of characteristics (except no single-hole wet tear strength test)	3.3.8	MIL-C-41814

Table XI. Component tests – continued.

Material	Characteristic	Requirement	Test Method
Counter (Alternate)/ Box Toe (Alternate)	Initial Collapsing Load	3.3.8.1	SATRA TM83
	Resilience	3.3.8.1	SATRA TM83
	Moisture Resistance	3.3.8.1	SATRA TM83
	Area Shape Retention Initial and 10th collapse	3.3.8.1	SATRA TM83
Cushion Midsole	Density	3.3.14	ASTM D297
	Hardness (shore A)	3.3.14	ASTM D2240 23/
	Tensile strength	3.3.14	ASTM D3574 20/
	Elongation	3.3.14	ASTM D3574 20/
	Tear strength Die T	3.3.14	ASTM D3574 20/
	Volume swell w/IRM Oil #3 (@ 24 h)	3.3.14	ASTM D471 20/, 19/
	Compression set	3.3.14	SATRA TM64 22/
	Ross flex (1x6 inch) @ -5ºC	3.3.14	ASTM D1052 21/, 18/
Rubber Compound	DIN Abrasion	3.3.15	ASTM D5963
	Hardness (Shore A)	3.3.15	ASTM D2240
	Stitch Tear, Dry	3.3.15	ASTM D4786 25/
	Stitch Tear, (Fuel B)	3.3.15	ASTM D4786 25/
	Tear Strength, Die C	3.3.15	ASTM D624
	Ross flex, Oil #3	3.3.15	ASTM D1052 10/
	Volume swell, Fuel B (@ 46 h)	3.3.15	ASTM D471 19/, 24/
	Non-marking	3.3.15	SATRA TM223
	Tensile	3.3.15	ASTM D412
	Elongation	3.3.15	ASTM D412
	Cold Flex (@ -23°C)	3.3.15	ASTM D1052
	Transitional Hardness (2 h @ -23°C)	3.3.15	ASTM D2240
	Slip Index		
	Cold/Ice - Rough ice method	3.3.15	SATRA TM144
	Quarry Tile, Wet	3.3.15	SATRA TM144

Table XI. Component tests – continued.

Material	Characteristic	Requirement	Test Method
Removable Cushion Insert	Density	3.3.17	ASTM D3574
	Thickness	3.3.17	ASTM D1777 1/
	Foam hardness	3.3.17	ASTM D2240
	Tensile strength	3.3.17	ASTM D3574
	Compression set @ 25%	3.3.17	ASTM D3575
	Compression set @ 50%	3.3.17	ASTM D3575
	Fabric Top Cover		
	Fabric Only; Dry	3.3.17	ASTM D4966 2/
	Bursting Strength		
	Fabric Only	3.3.17	ASTM D3787
Box Toe	Thickness	3.3.7	ASTM D1777 17/

1/ As described in the test method; Martindale Tester; Pressure applied: 12 kPa; visually examine specimens after each 3200 cycles; Abradant changed after each 3200 cycles. Use Option 1 for evaluation; no hole appears.

2/ Determine hydrostatic resistance of 5 samples in accordance with ASTM D751 Procedure A1 with the face (foot side) of the liner cloth in contact with the water.

3/ Determine hydrostatic resistance of 5 samples containing sealed seams in accordance with ASTM D751 Procedure A1 with the face (foot side) of the liner cloth in contact with the water and the seam centrally located in the circular orifice.

4/ Test 5 samples, 4 inches by 4 inches in dimension, cut from the laminate material and exposed to contamination, synthetic perspiration (Footnote 5). Contaminate prior to leak testing by dispensing 2 ml of perspiration solution on both sides of the sample (see Footnote 6 for contamination procedure). Determine hydrostatic resistance in accordance with ASTM D751 Procedure A1 with the face (foot side) of the liner cloth in contact with the water.

5/ Synthetic perspiration shall be made up in a 500 ml glass beaker by combining 3.0 grams sodium chloride, 1.0 gram trypticase soy broth powder, 1.0 gram normal propylpropionate, and 0.5 grams of liquid lecithin. Add 500 ml of distilled water, add a magnetic stirring bar and cover beaker. Place the beaker on a combination hot plate/ magnetic stirring apparatus. While stirring, heat the solution to 50 degrees C until all ingredients are dissolved. Then, while stirring, cool solution to 35 degrees C.

6/ Dispense contaminate onto the center of a glass plate (4 inches by 4 inches by 0.25 inch thick.) Sample shall be placed face down on the plate and an additional contaminate dispensed on the backside. Place a second glass plate on the sample. Next, position a 4-pound weight on the center of the second glass plate. After 16 hours, remove the sample (do not rinse) and test immediately.

7/ Test 5 samples, 4 inches by 4 inches in dimension, cut from the laminate material and exposed to diesel fuel as follows: Contaminate prior to leak testing by dispensing 3 drops of diesel fuel onto both sides of the sample (see Footnote 6 for contamination procedure). Determine hydrostatic resistance in accordance with ASTM D751 Procedure A1 with the face (foot side) of the liner cloth in contact with the water.

8/ Determine water resistance of 5 samples in accordance with AATCC 127 with face/foot side towards water. Suter test conditions shall be .7 Psi (50 cm), for 5 minutes. Any observed water droplets in test area constitutes a failure.

9/ Determine water resistance of 5 samples containing sealed seams in accordance with AATCC 127 with the face (foot side) of the liner cloth in contact with the water and the seam centrally located in the circular orifice. Suter test conditions and inspection explained in Footnote 8.

10/ Test 5 samples, 4 inches by 4 inches dimension, cut from the laminate material and exposed to synthetic perspiration (Footnote 5.) Contaminate prior to leak testing by dispensing 2 ml of perspiration solution on both sides of the sample (see Footnote 6 for contamination procedure). Determine water resistance in accordance with AATCC 127 with the face (foot side) of the liner cloth in contact with the water. Suter test conditions and inspection explained in Footnote 8.

11/ Oil Test 5 samples, 4 inches by 4 inches in dimension, cut from the laminate material and exposed to diesel fuel as follows: Contaminate prior to leak testing by dispensing 3 drops of diesel fuel onto both sides of the sample (see Footnote 6 for contamination procedure.) Determine water resistance in accordance with AATCC 127 with the face (foot side) of the liner cloth in contact with the water. Suter test conditions and inspection explained in Footnote 8.

12/ Determine abrasion durability of the back side of 5 laminate samples in accordance with ASTM D3886. Non-contact pin diaphragm approved for use to decrease variability. The test is to be run for the specified number of cycles prior to testing for leakage. Leakage shall be determined in accordance with AATCC 127 (Footnote 8.)

13/ Determine MVTR in accordance with ASTM E96 method B with the back side of the test cloth facing the water. The free stream air velocity shall be 550 ($\pm$ 50) fpm as measured 2 inches above the specimen. The airflow shall be measured at least 2 inches from any other surface. The test shall be run for 24 hours and weight measurements shall be taken at only the start and the completion of the test. At the start of the 24-hour test period, the air gap between the water surface and the specimen shall be 0.75 ($\pm$ 0.06) inches.

14/ Determine MVTR in accordance with ASTM E96 method BW with the backside of the test cloth facing the water. The free stream air velocity shall be 550 ($\pm$ 50) fpm as measured 2 inches above the specimen. The airflow shall be measured at least 2 inches from any other surface. The specimen shall be sealed to the cup in any manner that prevents wicking or leaking of water out of the cup. The test shall be run for 2 hours and weight measurements shall be taken at only, the start and completion of the test.

15/ Test one sample, 8 inches by 12 inches, shall be conditioned and flexed in accordance with ASTM F392 except specimen shall not be aged, the short edges shall not be heat sealed or otherwise joined, and the specimen shall be flexed for the specified number of cycles. Two, 6 inch by 8 inch specimens shall be cut from the flexed sample and tested for leakage in accordance with AATCC 127 (see Footnote 8.)

16/ One sample, 14 inches by full width, shall be selected from a sample unit and tested for leakage after the required number of hours of continuous agitation. The specimen shall be agitated using the "normal," cycle in an automatic home laundering machine except that the washing machine shall be capable of continuous agitation. The water level shall be maintained at 16 (± 0.5) gallons and the water temperature shall be 32 (± 9 degrees C). Additional fabric shall be added to the specimen to create a load weight of 2 (± 0.2) pounds. Upon completion of the continuous agitation the specimen is to be air dried and then tested for leakage in accordance with AATCC 127 (Footnote 8.)

17/ A thickness gauge of the dead-weight type equipped with a dial graduated to read directly to 0.001 inches shall be used. The presser foot shall be circular, with a diameter of 1.1129 (±0.001) inches and with moving parts weighted to apply a total load of 0.60 (±0.03) pounds per square inch (psi) to the specimen. The anvil shall be not less than 1.129 inches in diameter. The presser foot and anvil surface shall be paned to within 0.001 inches and shall be parallel to each other to within 0.001 inches.

18/ Modified to include 2mm Texon board glued onto the specimen and conducted at -5 degrees C after conditioning for 2 hours.

19/ Tested at room temperature w/ ASTM Oil #3

20/ Thickness of test sample used shall equal 12.7mm (.5 inches) from test slabs or 6.0mm from actual cushioned midsoles.

21/ Thickness of test sample used shall equal 6.4mm (0.266 inches) from test slabs or 6.0mm from actual cushioned midsoles. Actual cushioned midsoles shall be used for verification testing only. However, all reports used for conformance purposes and submitted to the Government shall use test slabs.

22/ Thickness of test sample used shall equal 12.7mm (.5 inches) from test slabs or 19mm from actual cushioned midsoles. Actual cushioned midsoles shall be used for verification testing only. However, all reports used for conformance purposes and submitted to the Government shall use test slabs.

23/ Thickness of test slab shall be as stated in the respective ASTM method.

24/ At room temperature with ASTM slabs

25/ After 46 hours at room temperature

4.4.2 Spectral reflectance test. Spectral reflectance data shall be obtained from 600

to 860 nanometers (nm) on a spectrophotometer relative to the barium sulfate standard, the preferred white standard. Other white reference materials may be used provided they are calibrated to absolute white, e.g. magnesium oxide or Vitrolite tiles. The spectral band width shall be less than 26 nm at 860 nm. Reflectance measurements shall be made by either the monochromatic or polychromatic mode of operation. When the polychromatic mode of operation is used, the spectrophotometer shall operate with the specimen diffusely illuminated with the full emission of a continuous source that simulates either CIE Source A or CIE Source D65. Measurements shall be taken on a minimum of 2 different areas and the data averaged. The measured areas should be at least 6 inches away from the selvage. The specimen shall be viewed at an angle no greater than 10º from normal, with the specular component included. Photometric accuracy of the spectrophotometer shall be within 1 percent and wavelength accuracy within 2 nm. The diameter for standard aperture size used in the color measurement device shall be 1.0 to 1.25 inches. Any spectral reflectance value falling outside the limits at four or more of the wavelengths specified shall be considered a test failure.

4.4.3 Toxicity test. When required (see 3.9), an acute dermal irritation study and a skin sensitization study shall be conducted. When the results of the studies indicate the boot is not a sensitizer or irritant, a Repeat Insult Patch Test shall be performed in accordance with the Modified Draize Procedure.

4.4.4 In-process inspection. Inspection shall be made at any point or during any phase of manufacturing to determine whether operations or assemblies are accomplished as specified. The Government reserves the right to exclude from consideration for acceptance any material or service for which in-process inspection has indicated nonconformance.

4.4.4.1 In-process examination. The defects found during in-process examination shall be classified in accordance with 4.4.4.1.1, 4.4.4.1.2, and 4.4.4.1.3. The lot size shall be expressed in units of upper assemblies prepared for lasting. The sample unit shall be one completely fabricated upper assembly prepared for lasting.

4.4.4.1.1 Pre-fitting examination of cut parts. The cut parts shall be examined for the defects listed in Table XII before fitting. The lot size shall be expressed in units of cut parts. The sample unit shall be one cut part. Defects shall be major when seriously affecting serviceability or appearance, and as minor when affecting serviceability or appearance but not seriously.

Table XII. Cut parts defects.

Cut Part	Defect 1/
Upper leather	Not full grain
	Not grain side out
	Leather deeply snuffed; i.e., fiber structure damaged
	Grub or tick damage, scratches, brands, or bony leather
	Fat wrinkles or veins
	Stretchy vamp
	Thickness exceeding the maximum or less than the minimum specified off-stretch cut
	Slaughter cut
	Leather embossed
Quarter side panels	Not as specified
	Any hole, spot, stain, foreign matter, cut, tears, miss-weave, or color not as specified

1/ Defects shall be major when seriously affecting serviceability or appearance, and as minor when affecting serviceability or appearance but not acutely.

4.4.4.1.2 Examination of uppers after all fitting. The upper assemblies shall be examined for the defects listed in Table XIII. The lot shall be expressed in units of upper assemblies prepared for lasting. The sample unit shall be one completely fabricated upper assembly prepared for lasting.

NOTE: Conditions classified by an asterisk (*) in Tables XIII through XV shall be scored as major defects when seriously affecting serviceability or appearance, and as minor when affecting serviceability or appearance but not seriously. Appearance defects shall be scored only when the condition is plainly visible at a distance of 3 feet or more and it appreciably affects item appearance.

Table XIII. Examination of uppers after all fitting.

Examine	Defect	Classification	
		Major	Minor
Construction and workmanship	Any component missing or not specified type	101	
	Any component misplaced or not affixed as specified	*	
	Any cut, tear, hole, repair, or factory damage	*	
	Back seam malformed		201
	Thickness more than 1/2 ounce less than minimum specified	102	

Table XIII. Examination of uppers after all fitting - continued.

Examine	Defect	Classification	
		Major	Minor
Construction and workmanship - continued	Thickness less than specified minimum but not extending 1/2 ounce less		202
	Thickness more than maximum specified		203
	Off-stretch cut	*	
Lining	Torn, loose, or wrinkled	*	
	Not properly mated with upper	*	

4.4.4.1.3 In process examination of boot before bottom filling. The partially fabricated boots shall be examined for the defects listed in Table XIV. The lot size shall be expressed in units of partially fabricated boots. The sample unit shall be one partially constructed boot assembled to the point after lasting and attachment of shank, but before the application of the bottom filler.

Table XIV. Boot before bottom filling defects.

Examine	Defect	Classification	
		Major	Minor
Bottom of boot	Any component missing or not specified type	103	
	Shank not properly positioned or not fitting contour of boot bottom	104	
	Shank wrong size, malformed, or not securely attached	105	
	Upper damaged	*	
	Poor heel seat, side, or toe lasting	*	
	Inseam not properly trimmed		204
	Inseam stitches broken, two or more consecutive skipped inseam stitches, or inseam stitches cut or damaged during trimming operation not repaired	106	
	Not repaired as specified		205
	Inseam stitches not in insole rib		206
	End of counter not caught in inseam stitching	*	
Upper part of boot	Excessive roughing or scouring	*	

4.4.5 End item visual examination. The end items shall be examined for the defects listed in Table XV. The lot size shall be expressed in units of boots. The inspector shall check to see that cushion inserts are inserted in the boots. For the pairing examination, and when determining possible differences in outer-sole thickness, the pair shall be examined together. During the inspection for the defects listed in Table XV, the departures from specification requirements listed in the table shall be observed and recorded. Presence of

these departures shall not result in the rejection of the lot; however, the plant quality assurance and Government personnel reserve the right to establish and impose lot rejection criteria when either the severity or the presence of these departures warrants such a measure. This additional rejection criteria may be invoked at any time during the life of the contract when the Government judges this action to be in its best interest. Defects of pairing shall be classified as a single defect. Sampling for end item inspection shall be in accordance with General Inspection Level II, AQL 2.5 for Major defects, of American National Standard ANSI/ASQC ZI.4 or USA solicitation to define.

Table XV. End item visual defects.

Examine	Defect	Classification	
		Major	Minor
Pairing	Not properly mated; i.e., not right and left of same size	107	
	Variation in color, luster, or appearance	*	
	Variation of more than 1/4 inch in height of pair	108	
	Box toe malformed	*	
	Difference in outsole thickness between left and right boots:		
	more than 3/32 inch	109	
	more than 1/16 inch but not more than 3/32 inch		207
Cleanness	Any non-removable spot, stain, or foreign matter affecting appearance		208
Color and finish	Color not as specified	*	
	Finish streaky, chipped, or flaky on upper		209
Design	Not as specified	110	
Construction and workmanship (general)	Any cut, tear, hole, repair or damage	*	
	Any component or assembly omitted or misplaced, operation omitted, not properly performed	*	
Seams and Stitching (upper)	Open seam not repaired	111	
	Repair of open seam not as specified		210
NOTE: A seam shall be classified as open when one or more stitches joining a seam are broken or when two or more consecutive skipped or runoff stitches occur. On multiple stitched seams, a seam is considered open when one or both sides of the seam are open. When the above conditions occur on the inside of the boot, it shall be scored with an asterisk (*).			

Table XV. End item visual defects - continued.

Examine	Defect	Classification	
		Major	Minor
Seams and Stitching (upper) - continued	Tight tension resulting in puckering or cutting of the leather	*	
	Loose tension resulting in a loosely secured seam	*	
	Stitching omitted where required	*	
	Gauge of stitching irregular	*	
	Thread ends not trimmed throughout the boot		211
	Needle hole or needle chew	*	
Vamp stitching at outsole junction	One or more rows of defective stitching not repaired	112	
	Stitching repaired, but first stitch more than 1/4 inch from outsole junction	113	
	Repaired with one stitch in lieu of two or more stitches		212
Outsole and heel	Thickness not as specified	114	
	Edge scouring is irregular, affecting appearance		213
	Any malformation	*	
Eyelets/speed laces	Number of eyelets/speed laces not as specified	115	
	Not the same number of eyelets/speed laces in each row	116	
	Eyelets/speed laces not properly spaced within the row or misalignment between the rows to an extent interfering with proper lacing	*	
	Any eyelet/speed lace not securely clinched		214
Marking and instruction tag	Missing, incomplete, incorrect, not applied in the specified manner, misplaced, illegible, or not of specified size		215
Lining	Torn, loose, or wrinkled	*	
	Not properly mated with upper		216
Bar code label/tag	Bar code omitted or not readable by scanner; human-readable interpretation (HRI) omitted or illegible; bar code type not as specified; code density not as specified		217
Cushion insole (insert)	Missing, wrong size, or wrong side up	117	

4.4.6 End item testing. The finished boot shall be tested for the characteristics listed in Table XVI. The sample size for all tests except SATRA whole boot flex leakage, thermal insulation, MVTR, and liquid penetration resistance shall be five boots per lot. For

these tests, the sample size shall be three boots for each test per lot. Use swatches for thermal testing obtained from manufacturer or cannibalized boots. The number of determinations per sample unit for all tests shall be one. The lot size shall be no less than 800 pair. If passing test results are attained for the first and second lots, then a certificate of compliance will be submitted and considered acceptable for the SATRA leakage and liquid penetration, MVTR, NFPA Upper Heat Resistance and NFPA Sole Heat Resistance testing for all subsequent lots. Flame resistance is considered Government Acceptance Testing for the Expanded First Article and the first two production lots, after which a certificate of compliance shall apply. The Government reserves the right to draw samples from any production lot and perform any tests deemed necessary at any time during the term of the contract.

Table XVI. End item tests.

Characteristics	Requirements Paragraph	Test Method
Boot Weight	3.3	Commercial Standard
Boot Height	3.4	4.7.6
Bond strength		
Entire sole to upper only	3.3.16.1	4.7.4
Midsole to cushion midsole	3.3.16.1.1	4.7.1
Outsole to cushion midsole	3.3.16.2	4.7.1
Toe adhesion	3.3.16.2	4.7.5
Boot leakage	3.7	4.7.2
Whole Boot MVTR	3.3.18	ASTM E96 (4.7.3)
Thermal Protection		
Flame resistance	3.3.20.1	NFPA 1971, Sec 8.5
Upper heat resistance	3.3.20.2	NFPA 1971, Sec 8.7
Sole heat resistance	3.3.20.3	NFPA 1971, Sec 8.8
Liquid penetration	3.3.20.4	NFPA 1971, Sec 8-28

4.7 Methods of inspection.

4.7.1 Bond strength. Bond strength test of midsole to cushion midsole, and of outer-sole to cushion midsole. The specimen shall be a combined midsole-cushion/midsole-outsole unit which has aged at least 2 days. The midsole shall be separated from the cushion-midsole, and the outer-sole separated from the cushion-midsole, for a distance of approximately 2-1/2 inches each from the toe end of the specimen. Separate units may be used for each of the two tests.

4.7.1.1 Apparatus. A power-driven adhesion machine, or an approved testing device of equal performance, shall be used. The rate of travel of the power-actuated grip shall be 2 inches per minute. The machine shall be operated with a device for maintaining maximum load indication.

4.7.1.2 Procedure. The separate toe ends of the specimen shall be clamped in the jaws of the machine. The specimen shall extend outward at right angles to the direction of the application load. The machine shall be started, and the surface being tested (i.e. upper to base, base to midsole, or midsole to outsole) shall be pulled apart to a distance of not more than 4 1/2 inches from the toe. Upon attaining that degree of separation, the load indicated on the machine shall be read and recorded. If the required load is achieved (at any time during the pull test) the test is deemed as passing. The procedure shall be repeated for the cushion-midsole to midsole.

4.7.2 Boot leakage test. The boot leakage test shall be designed to indicate leakage by using water as a liquid medium through the boot by means of a whole shoe flex test (IAW SATRA PM 77, modified as indicated below) while the boot is submerged. The minimum standard for passing this test is 100,000 flexes. Each boot shall be preconditioned by flexing according to MTM 77, DRY with a foot form of steel shot for 100,000 flexes.

4.7.2.1 Apparatus. SATRA STD 184 whole shoe flexing apparatus or equal will be modified to allow the end item to be submerged to a depth of the mid-point between the third and fourth eyelet. The mechanism for flexing on any other apparatus must be exactly the same as the SATRA 184. The sides of the apparatus must be raised to alleviate splashing on the mechanism for flexing.

4.7.2.2 Procedure. Testing shall be according to MTM 77 at 140 ($\pm$10) flexes/minute and 35 degrees for each flex cycle. A modified SATRA STD 184 whole boot flex apparatus or equal must be used so that the water depth required can be achieved. The top of each item must be sealed appropriately so that the water splashing from the test does not enter through the top of the boot. Absorbent blotting paper will be “balled up” and placed within the boot upper so that any water ingress through the top or upper can be determined. A change in the color between the top and the bottom sections of the absorbent blotting paper will indicate water ingress. The steel shot foot-form shall be removed for testing in water. The end item shall be checked at 100,000 cycles for leakage, as indicated by a color change in the absorbent blotting paper within the boot.

4.7.2.3 Method of inspection. End items shall be evaluated in accordance with MTM 77, by checking for a change in color of the absorbent blotting paper that is “balled up” and placed within the boot upper. If water enters the top of the boot during the test, new absorbent blotting paper shall be inserted for the remainder of the test, unless the water has leaked to below the fourth eyelet. If water has definitely leaked through the top of the boot by splashing and reached to below the fourth eyelet, then the whole boot must be dried and the absorbent blotting paper replaced before the test is resumed. Water ingress into the boot by way of wicking up the boot upper (outside) and down into the boot lining (inside) will not be considered an item failure. If it cannot be determined if the water has entered through the top or upper of the boot, a new boot shall be requested and subjected to the test.

4.7.3 Whole boot breathability. The boot breathability test shall be designed to indicate the Moisture Vapor Transmission Rate (MVTR) through the boot by means of a difference in concentration of moisture vapor between the interior and the exterior

environment.

4.7.3.1 Apparatus.

a. The external test environment control system shall be capable of maintaining 23°C (±1°C) and 50 (±2) percent relative humidity throughout the test duration.

b. The weight scale shall be capable of determining the weight of boots filled with water within ±0.01 gram.

c. The water holding bag insert shall be flexible in order for it to be inserted into the boot and conform to the boot's interior contours; it shall be thin enough so that folds do not create air gaps. The water holding bag insert shall have an MVTR between 920-990 grams/meter2/24 hour. The water holding bag insert shall be waterproof so only moisture vapor, not water, contacts the interior of the boot. ASTM E 96 B, Standard Test Methods for Water Vapor Transmission of Materials, shall be used to determine acceptability (1/). The water holding bag insert shall be replaced and disposed of after five (5) uses.

d. The internal heater shall be capable of controlling the temperature of the water uniformly in the boot to 35°C (±1°C) as measured in the toe area of the boot.

e. The foot-form assembly used with the water circulating bath system shall have a boot plug oriented 12.5 centimeters (5 inches) as measured from the bottom of the plug surface to the inside sole in the heel area.

f. The boot plug shall be oval shaped measuring 3.0 by 2.5 inches and shall be impervious to both water and water vapor.

g. The top of the boot shall be sealed to create an impervious barrier to both liquid water and water vapor.

h. Boots should be laced to the top of the lacing system. Allow for 1 (±0.5) inch separation between lateral and medial eyelet stays, with possible exception of the eyelets at the top of boot and boot plug area. Maximize seal security at top of boot.

i. A stationary 6-inch diameter fan shall be used to create the air current past the boot.

j. The stationary fan shall be positioned perpendicular to the test surface and raised so the center of the fan is 5-inches from the test surface.

k. The air current origin shall be 15.5 inches from the back heel edge of the boot (D). Refer to Diagram 1.

l. The air current shall be 250 (±30) feet/minute at the heel edge of the boot (S). Measurement shall be taken without the boot assembly in place 2 inches up from the test surface at the fan center.

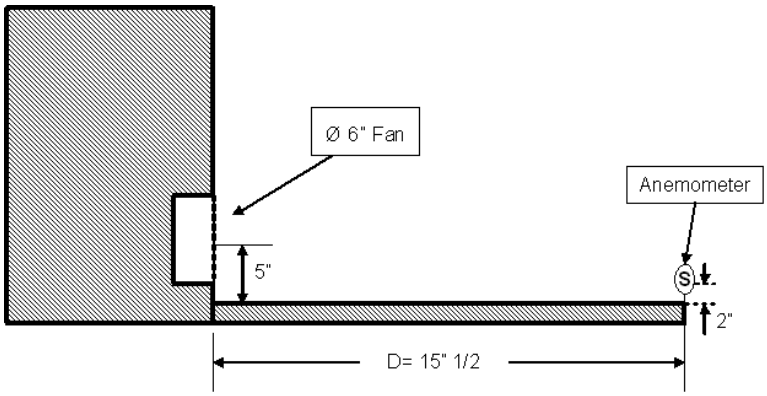

D = Distance from boot heel edge to fan interface
S = Wind speed at boot heel edge

DIAGRAM 1. Whole boot breathability bench-top set-up

1/ Determine MVTR in accordance with ASTM E96 method B with the knit side of the membrane facing the water. The free stream air velocity shall be 550 (± 50) feet per minute (fpm) as measured 2 inches above the specimen. The airflow shall be measured at least 2 inches from any other surface. The test shall be run for 24 hours and weight measurements shall be taken at only the start and completion of the test. At the start of the 24 hour test period, the air gap between the water surface and the specimen shall be 0.75 (± 0.06) inches.

4.7.3.2 Procedure.

a. Remove the removable cushion insert from the boot sample.

b. Weigh boot sample and record (this will be the unconditioned weight)

c. The boot shall be conditioned in the test environment for a minimum of 12 hours before testing.

d. Insert holding bag into boot opening and fill holding bag with preheated (35 ± 1°C) water to a height of 5 inches (12.5 centimeters) measuring inside from the boot's sole.

e. Insert the water heater and seal the boot's opening with a boot plug. The water should be in contact with the bottom of the boot plug.

f. Disconnect water circulating system and weigh boot assembly and record as Wi. The water volume in system shall be noted at the time of weighing.

g. After weighing reconnect water circulating system and maintain the temperature in boot at 35 (±1)º C for 6 hours (± 5 minutes).

h. After six hours, disconnect water circulating system and weigh the boot sample.

i. Record that weight as Wf and the test duration as Td.
j. Determine the whole boot MVTR using this equation:

$$MVTR = \frac{Wi - Wf}{Td}$$

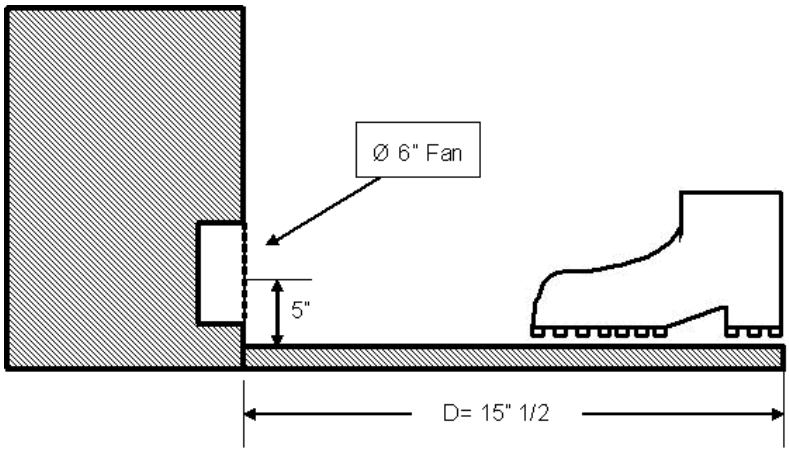

DIAGRAM 2. Whole Boot Breathability Bench-top Set-Up with Boot

k. If test is aborted for any reason, thoroughly dry boot to within 5 grams of original boot weight (Step b). Recondition boot sample in test environment for the required length as outlined, and begin test procedure again.

4.7.3.3 Method of inspection. Each boot shall be tested in accordance with the method described in 4.5.3.2 The average whole boot MVTR from the three boots tested shall be determined in grams/hour.

4.7.4 Entire outsole to upper test, for boots (DMS and including injection molded process only).

4.7.4.1 Adhesion at ball.

4.7.4.2 Apparatus. The apparatus for measuring the separation of the outsole from the upper shall be as described in ASTM D2208. The test specimen shall be legibly marked on each side at two points (2 inches from the tip of the toe and 4 inches from the tip of the toe). The entire outsole shall as specified in paragraphs 3.3.1, 3.3.2 and 3.3.3, then be separated from the upper to the 2 inch mark. The separation may be aided by any device or machine capable of withstanding the amount of force necessary to accomplish separation. After separation to the 2 inch mark is achieved, the toe cap of the boot may be crushed to facilitate mounting of the specimen in the tester. In event that the point of separation at the 2 inch mark is not between the upper and the outsole, the portion of the rubber outsole remaining adhered to the upper shall be separated manually (with the aid of a knife or other instrument) so as to show separation between leather and rubber outsole. Care should be taken in order to ensure that the leather is not cut.

4.7.4.3 Procedure. The apparatus for measuring outsole/upper separation shall be as described in test method ASTM D2208. The separated and crushed toe portion of the boot shall be gripped by one clamp in a manner such that the minimum effective jaw surface area applied shall be 1 inch by 1 inch. The jaw surface shall be centered approximately 1/2 inch to 1 inch from the tip of the toe. The other jaw surface shall hold

the overlay portion of the separated upper, and it shall not be less than 1 inch by 2 inches, with the long dimensions perpendicular to the pull of the machine. The machine shall be set in operation and the separation continued at a speed of 10 inches per minute until the outsole is separated from the upper to a point past the mark 4 inches from the tip. The maximum value attained during separation shall be taken as the bond strength.

4.7.5 Adhesion at toe (DMS only).

4.7.5.1 Specimen. The test specimen shall be a single finished boot of any size.

4.7.5.2 Procedure. The apparatus shall be the SATRA Sole Adhesion Tester STD 185/S or 185, equipped with toe piece 185/5, having an arc length of 22 mm, a radius of 1-1/4 inch, and a toe piece length of 12.7 mm. A description of such apparatus may be found in SATRA Test Method MTM 404 Adjust the height of the anvil to suit the sole thickness using the packing pieces provided. The forepart or the sole should be approximately horizontal or sloping slightly downward towards the toe. Check the zero of the load gauge and correct if necessary. Place the test boot without a last on the anvil of the adhesion tester so that the toe piece of the instrument is inserted in the feather line groove between the sole and upper. Grasp the boot firmly and press down on the back so that the load increases steadily. If possible, apply the load at such a rate that the test is completed in about 3 seconds. Push the boot against the pressure block when applying the load to prevent the toe of the boot from slipping out of engagement with the toe piece of the instrument. However, avoid digging the toe piece into the upper material excessively, as this may affect the result obtained. Slipping is less likely to occur if boots are tested before edge trimming. When the sole begins to separate from the upper (for a distance of approximately 1/8 inch [3 mm] in from the feather edge), read the load on the instrument. This is usually a maximum value, the load dropping as further separation takes place.

4.7.6 Boot height.

4.7.6.1 Procedure.

4.7.6.1.1 Place the boot upright on a flat surface.

4.7.6.1.2 Measure at the back of the heel, from the flat surface to the top of the back of the boot.

5. PACKAGING

5.1 Packaging. For acquisition purposes, the packaging requirements shall be as specified in the contract or order (see 6.2). When packaging of materiel is to be performed by DoD or in-house contractor personnel, these personnel need to contact the responsible packaging activity to ascertain packaging requirements. Packaging requirements are maintained by the Inventory Control Point’s packaging activities within the Military Service or Defense Agency or within the Military Service’s System Commands. Packaging data retrieval is available from the managing Military Department’s or Defense Agency’s automated packaging files, CD-ROM products, or by contacting the responsible packaging activity.

6. NOTES

(This section contains information of a general or explanatory nature that may be helpful, but is not mandatory.)

6.1 Intended use. The boots are intended for wear by U.S. military personnel.

6.2 Acquisition requirements. Acquisition documents should specify the following:

a. Title, number and date of this specification.
b. Types, classes and sizes required (see paragraph 1.2).
c. Quantity required.
d. The specific issue of individual documents referenced (see 2.2 and 2.3).
e. When first article inspection is required, (see paragraph 3.1).
f. Conformance inspection and Acceptable Quality Limits (AQL) (see 4.3).
g. Packaging requirements (see 5.1).
h. Toxicity Data

6.3 Certification. The certification for the boots shall be in accordance with the operating procedures of the USAF Optional Uniform Certification Procedures.

6.4 Standard shade, samples and purchase description. Request for standard shade samples and purchase descriptions should be addressed to the contracting activity issuing the invitation for bids.

6.5 Equal item. Prior to use of an “or equal” item, the Contractor shall submit the item with supporting data to the contracting officer for subsequent approval or disapproval by the responsible military agency. If deemed necessary, the Government reserves the right to test the boot in the field with the “or equal” component, or end item, at the Contractor’s expense prior to approval.

6.6 Subject term (key word) listing.

boots	footwear
leather	liner
waterproof	

6.7 International standardization agreements. This purchase description implements NATO STANAG 2333 Performance and Protective Properties of Combat Clothing. When amendment, revision, or cancellation of this purchase description is proposed, the preparing activity must coordinate the action with the U.S. National Point of Contact for the international standardization agreement, as identified in the ASSIST database at https://assist.dla.mil.

Figure 1 Medial (Inside) View Design Requirements

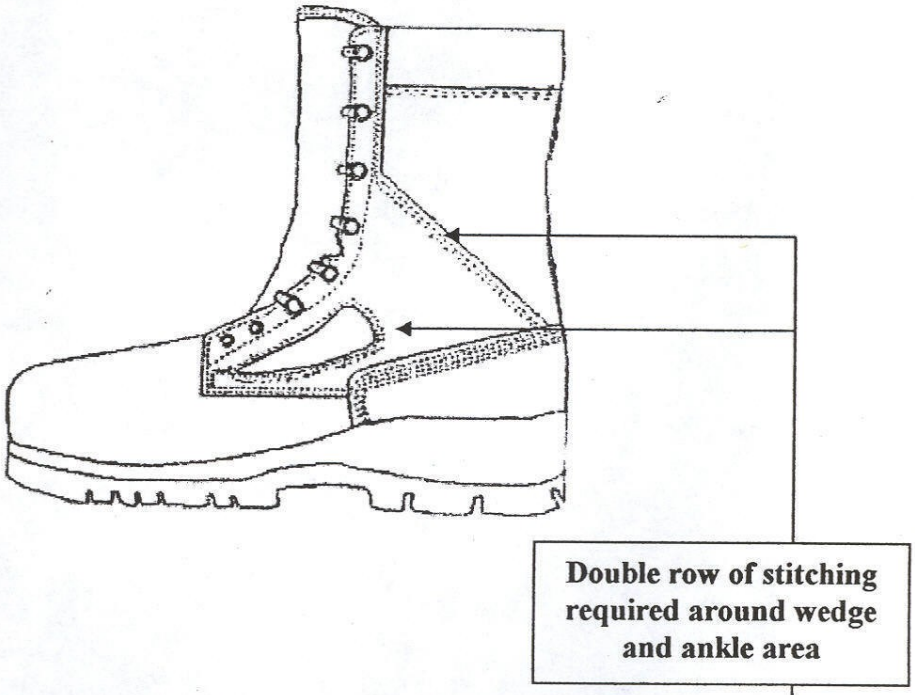

Figure 2 Lateral (Outside) View Design Requirements

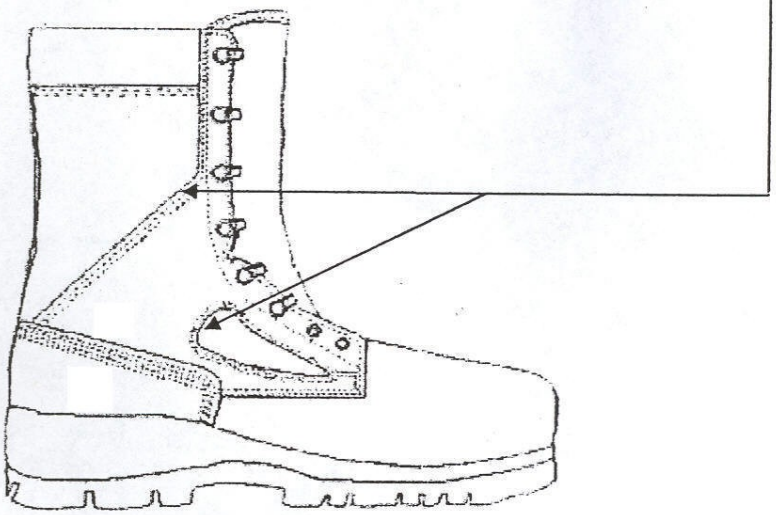

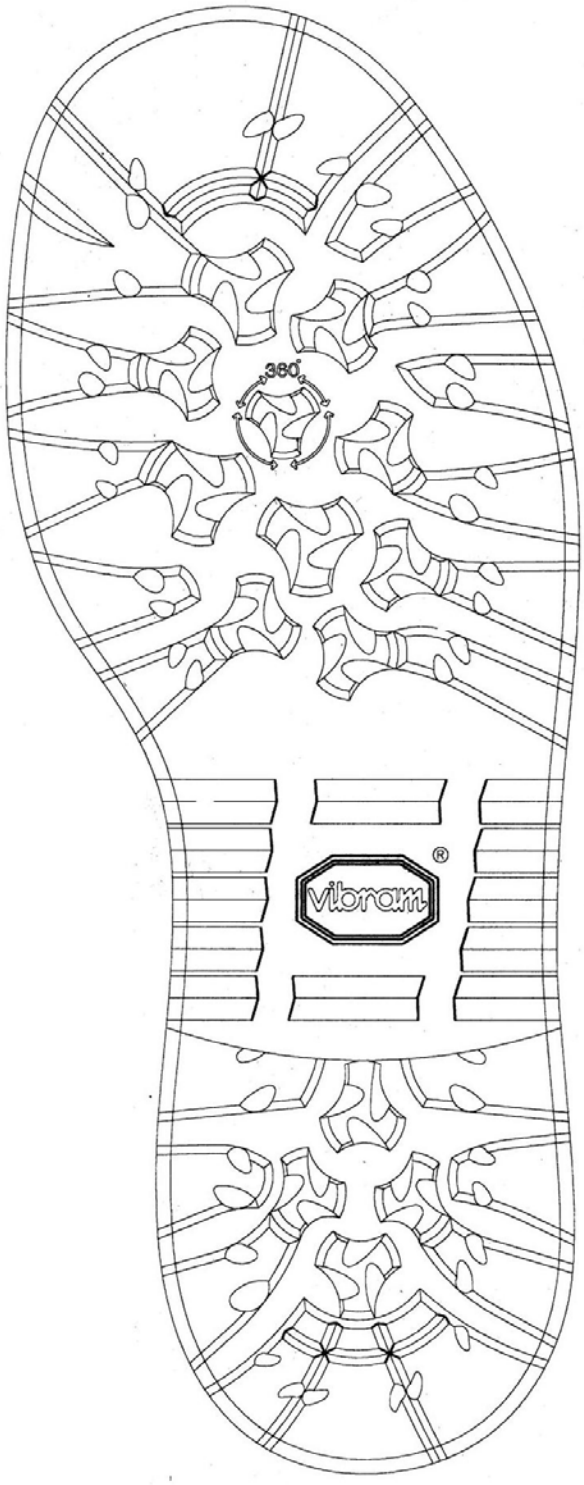

Figure 3. Outsole Pattern

Use and Care Instructions

Air Force Combat Boot
(Temperate Weather)

1. Wear with: 1 pair of socks, cushion sole, acrylic, polyester olefin or nylon/lycra blend or other depending on safety/uniform requirements; 1 pair of insole inserts if desired.

2. Sizes. These boots are supplied in whole and half sizes. In some instances, it may be necessary to select a slightly larger size than normally worn in order to allow for normal swelling of the feet and the use of insole inserts or cushioned socks.

3. Trousers should be bloused over the outside and below the comfort collar of the boot.

4. Break-in: DO NOT soak boots in water or bake in an oven to break-in. Boots should be worn-in gradually at first with ever-increasing walking or marching distances while remaining comfortable. If blistering occurs, check to make sure that boots are fitted properly and that you are wearing recommended socks.

5. Your Combat Boots are waterproof. However boots may become damp or wet due to excessive perspiration or water coming over the top of the boot. If boots become wet, empty excess water, change socks, and continue to wear while changing socks regularly. Boots will dry much faster when worn than if left to stand and dry. DO NOT expose boots to excessive heat to dry, including hair dryers, heating vents, stoves etc.

6. Your Combat Boot is designed for maximum performance in a field environment. Do not apply polish to your Combat Boots.

8. Your Combat Boots are designed to be easy to care for. The nylon quarter side panels of your boots are as strong as leather and will last if cared for properly. To clean your Combat Boots, brush with stiff nylon bristle brush to clean and then use warm water. Do not use soap to clean your boots. If additional, more stringent cleaning is necessary, only water-soluble cleaning products should be used as oil- or alcohol-based cleaning products may damage your boots.

9. Your Combat Boots come with a replaceable rubber outsole. Do not wear sole past rubber outsole into the softer midsole material or permanent damage to your boots will occur. The midsole is the soft cushioned material between the rubber lug outsole and the boot upper.

10. (Must include information on how/where the boots can get resoled or who to contact to receive information on resoling.)

Figure 4

CONCLUDING MATERIAL

CUSTODIAN:
Air Force – 11

PREPARING ACTIVITY:
Air Force Uniform Office (AFUO)
AFLCMC/WNU TAC
Area B, Building 63
1901 Tenth St.
Wright-Patterson Air Force Base, OH 45433-7605