TASK GROUP INSTRUCTION
AIM REV 20.11.4.0 (OCTOBER 2020)

TGI NO.:	COMPONENT NAME:	TYPE:	PHASE:	REPEAT:	CHANGE:
	FORCED DRAFT BLOWERS	AY	A	0	1

SHIP/HULL NO.:	SHIP/HULL NAME:	SYSTEM:	PROJ/WO NO:	CASREP CAT:
LCC-19	USS BLUE RIDGE		19P	

CU PHASE TITLE:
F/O – SA98081D FORCED DRAFT BLOWER VANE ACTUATOR 5-79-0-E

PREPARING ACTIVITY:

	CODE	PHONE	DATE
PREPARED BY: HIROSHI MATSUBAYASHI	232.	315-243-4509	17-MAR-2025
APPROVED BY: HIDEMI SENDA	232.	315-243-5616	18-MAR-2025
CONCURRED BY:	CODE	PHONE	DATE
CONCURRED BY:	CODE	PHONE	DATE
CONCURRED BY:	CODE	PHONE	DATE
CONCURRED BY:	CODE	PHONE	DATE

REASON FOR WORK/NEED FOR CHANGE:
Typo miss.

CHANGE INSTRUCTIONS:
CH-1: Revise paragraph 5.9. (05/30/2025)

SPECIAL REQUIREMENTS:

This work affects a fire zone boundary. Fabrication and/or staging of a non-flammable closure is required. CLEANLINESS FOR PIPING SYSTEM/EQUIPMENT LEVEL III.

WORK CERTIFICATION SIGNATURES

COMPLETION OF WORK REVIEW:	BADGE NO.:	SHOP/CODE:	PHONE:	DATE:

ACCEPTANCE OF COMPLETED WORK

PHYSICAL INSPECTION REQUIRED: ☐YES ☒NO	PHYSICAL INSPECTION COMPLETED:	BADGE NO.:	SHOP/CODE:	PHONE:	DATE:
RECORDS REVIEW:		BADGE NO.:	SHOP/CODE:	PHONE:	DATE:

3819P25001A01

LIST OF EFFECTIVE PAGES									
SHT NO.	CHG NO.	SHT NO.	CHG NO.	SHT NO.	CHG NO.	SHT NO.	CHG NO.	SHT NO.	CHG NO.
1-7									
J-1-2									
M1-7									

1. **SCOPE/PURPOSE**

1.1. Title: SA98081D Forced Draft Blower Vane Actuator, accomplish

1.2. Location of Work:

1.2.1. Blower Room (5-79-0-E)

1.2.2. Uptake Space (5-76-0-Q)

1.2.3. Fire Room (8-76-0-E)

1.2.4. Passage (2-64-0-L)

1.2.5. Oil Lab (5-83-1-Q)

1.2.6. Contractor Facility

1.3. Identification:

1.3.1. Quantity (One EA), 1A1 Main Forced Draft Blower (FDB)
Mfr: New Philadelphia Fun Co.
Mfr Id: 980A838
APL: 400060761

1.3.1.1. Quantity (One EA), Existing Double Acting Pneumatic Actuator Assembly
Size: 5X5 Inch
Model: 10035

1.3.1.2. Quantity (One EA), New Electric Viv Actuator Assembly
Mfr: Lowen Marine and Industrial
Mfr Id: 1601P-MC02
Model: Beck 11-159 with Digital Control Module (DCM-3)
Power: 120 VAC, Single-Phase 60 Hz
Operating Conditions: -40 DEG F TO 185 DEG F
Approx Weight: 50 LBS

1.3.2. Quantity (One EA), 1A2 Main Forced Draft Blower (FDB)
Mfr: New Philadelphia Fun Co.
Mfr Id: 980A838
APL: 400060761

1.3.2.1. Quantity (One EA), Existing Double Acting Pneumatic Actuator Assembly
Size: 5X5 Inch
Model: 10035

1.3.2.2. Quantity (One EA), New Electric Viv Actuator Assembly
Mfr: Lowen Marine and Industrial
Mfr Id: 1601P-MC02
Model: Beck 11-159 with Digital Control Module (DCM-3)
Power: 120 VAC, Single-Phase 60 Hz
Operating Conditions: -40 DEG F TO 185 DEG F
Approx Weight: 50 LBS

1.3.3. Quantity (One EA), 1B1 Main Forced Draft Blower (FDB)
Mfr: New Philadelphia Fun Co.
Mfr Id: 980A838
APL: 400060761

1.3.3.1. Quantity (One EA), Existing Double Acting Pneumatic Actuator Assembly
Size: 5X5 Inch
Model: 10035

1.3.3.2. Quantity (One EA), New Electric Viv Actuator Assembly
Mfr: Lowen Marine and Industrial
Mfr Id: 1601P-MC02
Model: Beck 11-159 with Digital Control Module (DCM-3)
Power: 120 VAC, Single-Phase 60 Hz
Operating Conditions: -40 DEG F TO 185 DEG F
Approx Weight: 50 LBS

1.3.4. Quantity (One EA), 1B2 Main Forced Draft Blower (FDB)
Mfr: New Philadelphia Fun Co.
Mfr Id: 980A838
APL: 400060761

1.3.4.1. Quantity (One EA), Existing Double Acting Pneumatic Actuator Assembly
Size: 5X5 Inch
Model: 10035

1.3.4.2. Quantity (One EA), New Electric Viv Actuator Assembly
Mfr: Lowen Marine and Industrial
Mfr Id: 1601P-MC02
Model: Beck 11-159 with Digital Control Module (DCM-3)
Power: 120 VAC, Single-Phase 60 Hz
Operating Conditions: -40 DEG F TO 185 DEG F
Approx Weight: 50 LBS

1.3.5. Quantity (4 EA), New Linkage Arm
Item No: F2
Material Spec: QQ-S-633, Steel
See Detail: 30-A of 2.3

1.3.6. Quantity (4 EA), New Spacer
Item No: F10
Material: Steel
Size: 5/8 Inch LG, 0.630 Inch ID X 1.000 Inch OD
See Detail: 28-E of 2.3

1.3.7. Quantity (8 AY), Control Air Piping for Main Forced Draft Blower 1A1, 1A2, 1B1 and 1B2 including Deck Sleeve, from Union Joint of Blower Actuation Unit
Size: 1/4 Inch O.D (0.250 Inch O.D X 0.030 Inch W.T) and 3/8 Inch O.D (0.375 Inch O.D X 0.032 Inch W.T)

Material: Copper
Specification: ASTM B68
Remarks: See 2.6 and Sheet 11 (DET 11A), 13 and 14 of 2.7 for detail

1.3.7.1. Quantity (4 AY), Control Signal Air Piping for Main Forced Draft Blower 1A1, 1A2, 1B1 and 1B2
Size: 1/4 Inch O.D (0.250 Inch O.D X 0.030 Inch W.T)
Material: Copper
Specification: ASTM B68

1.3.7.2. Quantity (2 AY), Supply Air Piping for Main Forced Draft Blower 1A1, 1A2, 1B1 and 1B2
Size: 3/8 Inch O.D (0.375 Inch O.D X 0.032 Inch W.T)
Material: Copper
Specification: ASTM B68

1.3.7.3. Quantity (2 AY), Lock Signal Air Piping for Main Forced Draft Blower 1A1, 1A2, 1B1 and 1B2
Size: 3/8 Inch O.D (0.375 Inch O.D X 0.032 Inch W.T)
Material: Copper
Specification: ASTM B68

1.3.7.4. Quantity (4 EA), Cap for Control Air Piping listed in 1.3.7.1
Size: 1/4 Inch O.D
Material: Brass

1.3.7.5. Quantity (4 EA), Cap for Control Air Piping listed in 1.3.7.2 and 1.3.7.3
Size: 3/8 Inch O.D
Material: Brass

1.3.8. Quantity (One EA), Power System
Remarks: See 2.10 for details

1.3.9. Quantity (One EA), Lighting System
Remarks: See 2.11 for details

1.3.10. Quantity (One EA), Interior Communication System
Remarks: See 2.12 for details

1.4. Security Classification: None.

1.5. Initial Condition:

1.5.1. Potential Asbestos Hazard.

1.5.2. Potential Lead Hazard.

1.5.3. Potential PCB Hazard.

1.6. Contractor work start date: 7/21/2026

1.7. Contractor work completion date: 11/21/2027

2. **REFERENCES:**

REF. NO.	DOCUMENT /DRAWING NUMBER	DOCUMENT/DRAWING TITLE	REV	CHG NO.	COPY REQ'D (Y/N)	SOURCE DOC (Y/N)	PARA	SEC	PG	CHP

REF. NO.	DOCUMENT /DRAWING NUMBER	DOCUMENT/DRAWING TITLE	REV	CHG NO.	COPY REQ'D (Y/N)	SOURCE DOC (Y/N)	PARA	SEC	PG	CHP
1	NSI FY25	Standard Items	-	ORG	N					
2	LI FY25	Local Standard Items	-	ORG	N					
3	DWG 204-8783650	FORCED DRAFT BLOWER VANE ACTUATOR REPLACEMENT BLOWER ROOM & FIRE ROOM	-		Y				ALL	
4	DWG 245-8783651	FORCED DRAFT BLOWERS EQUIPMENT ARRANGEMENT FDB ROOM & FIRE ROOM	-		Y				ALL	
5	DWG 104-2491048	5th Deck PLTG FR51-1/2 - FR102-1/4	M		Y				ALL	
6	DWG 513-8895001	CONTROL AIR PIPING REMOVAL INCID FORCE DRAFT BLOWER UPGRADE 4TH-1ST PLATF, FR 79	-		Y				ALL	
7	DWG 206-2492062	AGC19 COMBUSTION CONTROL PIPING ARR & L/M	B		Y				SEE NOTE	
8	DWG 113-8787308	FORCED DRAFT BLOWER VANE ACTUATOR FOUNDATION MODIFICATION	-		Y				ALL	
9	DWG 101-2491023	WEBS FR 77 1/2,79,81,83&84 1/2	H		Y				ALL	
10	DWG 302-8894389	POWER SYSTEM MODIFICATIONS INCIDENTAL TO FORCED DRAFT BLOWER FAN ACTUATOR	-		Y				ALL	
11	DWG 303-8894428	LIGHTING SYSTEM MODIFICATIONS INCID FORCED DRAFT BLOWER VANE ACTUATOR INSTALL	-		Y				ALL	
12	DWG 401-8895251	IC CIRCUITS 1BC & 2BC MODIFICATIONS FORCE DRAFT BLOWER VANE ACTUATOR	-		Y				ALL	
13	LAR SRFY-0035-25	NON-EXISTENT NSN FOR A PART OF LOCAL FDB VANE CONTROL ENCLOSURE	-		Y				ALL	
14	PDD 302-ELM-250213	SUPPLEMENTAL INFO FOR FAB & INSTL OF FDN FOR S/A 98081	-		Y				ALL	
15	MIL MIL-STD-2003	Electric Plant Installation Standard Methods for Surface Ships and Submarines	B		N					

2.1.

3. **APPENDICES:**

3.1. Appendix "J" TGI Job Summary Information Sheet
3.2. Appendix "M" TGI Material List
3.3. Appendix "D" Deficiency Form

4. **GENERAL REQUIREMENTS:**

4.1. Not Applicable.

5. **PROCEDURE:**

5.1. Pump out, clean and dry the bilge area located in 1.2.3 free from oil, debris, and other foreign matter.

5.2. Accomplish the inside machinist work of SCD 28081 for replacement of each actuator assembly in accordance with 2.3.

5.2.1. Fabricate each linkage arm listed in 1.3.5 and spacer listed in 1.3.6 in accordance with 2.3 except as Item No. F2 and F10.

5.2.2. Fabricate each linkage arm listed in 1.3.5 in accordance with Detail 30-A of 2.3.

5.2.2.1. Accomplish the requirements of 009-12 of 2.1, including Table One, Column(s) F, Lines One through 10.

5.2.3. Fabricate each spacer listed in 1.3.6 in accordance with Detail 28-E of 2.3.

5.3. Accomplish the outside machinist work of SCD 28081 for replacement of each actuator assembly in accordance with 2.3 and 2.4, using 2.5 for guidance.

5.3.1. Remove each pneumatic actuator assembly listed in 1.3.1.1, 1.3.2.1, 1.3.3.1 and 1.3.4.1 in accordance with 2.3 and 2.4.

5.3.1.1. Accomplish the requirements of 009-12 of 2.1, including Table 2, Column(s) A, Lines One through 7.

5.3.2. Accomplish the requirements of 009-25 of 2.1 for a local air hose test of each new weld of the watertight structural boundary. Allowable leakage: None.

5.3.3. Install each electric actuator assembly listed in 1.3.1.2, 1.3.2.2, 1.3.3.2 and 1.3.4.2 in accordance with 2.3 and 2.4.

5.3.3.1. Restore mating surfaces exposed by equipment removal. Repair by removing high spots, burrs, abrasions, and foreign matter, where removal can be accomplished by hand tools.

5.4. Accomplish the piping work of SCD 28081 to remove control air piping listed in 1.3.7 for replacement of each actuator assembly in accordance with 2.6, using 2.7 for guidance.

5.4.1. Accomplish the requirements of 009-95 of 2.1 for installation of each new mechanically attached fitting (MAF) listed in 1.3.7.4 and 1.3.7.5.

5.4.2. Accomplish the requirements of 009-12 of 2.1, including Table 2, Column(s) A, Lines One through 7.

5.4.3. Accomplish the requirements of 009-25 of 2.1 for a local air hose test of each new weld of the watertight structural boundary. Allowable leakage: None.

5.5. Accomplish the structural work of SCD 28081 for replacement of each actuator assembly in accordance with 2.8 and Enclosure-01, using 2.9 for guidance.

5.5.1. Accomplish the requirements of 009-12 of 2.1, including Table 2, Column(s) A, Lines One through 7.

5.6. Accomplish electrical removals, modifications and installations of the system listed in 1.3.8 through 1.3.10 in accordance with Enclosure-01, 2.4, 2.8, 2.10, 2.11, 2.12,.2.13 and 2.14.

5.6.1. Electrical installations must be in accordance with 2.15.

5.6.2. Accomplish the requirements of 009-12 of 2.1, including Table 2, Column(s) A, Lines One through 7.

5.7. Accomplish the requirements of 009-32 of 2.1 for new and disturbed surfaces.

5.8. Notes:

5.8.1. Planner: Code 232 H. Matsubayashi, 243-4509
Planner: Code 231B T.Ashina, 243-4370
Planner: Code 233 S.Ogawa, 090-6170-8579
Planner: Code 234 R.Saeki, 243-1109
Engineer: Code 260 H. Kudo, 243-7387
Engineer: Code 270 R. Oohashi, 243-4353

5.8.2. Work Integration Manager (WIM): Code 333 T. Yaginuma, 080-5419-0598

5.8.3. The order of the work steps are subject to change.

5.8.4. Cold and hot calibration for forced draft blower vane actuator will be covered by TGI Nos. 3819P25001C01 and 3819P25001C02 (SRF-JRMC TGI).

5.8.5. Provision of oily/chemical water barge will be coordinated by Project Team.

5.8.6. Work per this instruction involves cutting an access (or removal of a door) through a fire zone bulkhead, through the hull of the ship above the turn of the bilge, through ventilation components (ducting, plenums, etc.), or through any air-tight, fume-tight or watertight bulkheads normally used to control air flow in the event of a shipboard fire. A nonflammable closure is required in accordance with COMNAVSEASYSCOM MSG R 261400Z JUL 12. The closure, if not continuously in use, shall be staged near the access, readily visible and accessible, so that any emergency responder can install the closure to affect proper air flow onboard the ship.

5.8.7. WPC will copy the following sheets in 2.7
Sheet: 11, 13 and 14

5.8.8. JCN EXSA-ZC89 is related to this TGI.

5.9. Government Furnished Material (GFM):

5.9.1. SRF-JRMC will provide GFM listed in Appendix “M”.

5.10. SRF-JRMC will provide the following service work: (TGI No. 3819P25001S02)

5.10.1. [C740] Crane and crane rigging service.

5.10.2. [X99E] Utility service, electrical.

5.10.3. [X99M] Utility service, including low pressure air supply, water supply, and steam supply.

5.10.4. [C106.1] Provide safety inspection for SRF-JRMC employees.

5.10.5. [C106.2] Gas free inspection for SRF-JRMC employees.

5.10.6. [C133] QA inspection for (G) symbols.

5.10.7. [C260] Provide technical support.

APPENDIX "J"
TGI JOB SUMMARY INFORMATION SHEET

SYSTEM:	PLANT NO.:	COMPONENT NAME:	TYPE:	PHASE:	REPEAT:	CU PH VERSION:	CASREP CAT:
		FORCED DRAFT BLOWERS	AY	A	0	0	

CU PHASE TITLE:
F/O – SA98081D FORCED DRAFT BLOWER VANE ACTUATOR 5-79-0-E

PRIMARY COMPONENT:

COMPONENT UNIT LIST (FOR ASSEMBLIES):
#1A1 FDB BL #1B1 FDB BL #1A2 FDB BL #1B2 FDB BL LP AIR 5-79-0-E PP CMPT 5-79-0-E MS CMPT 8-76-0-E MS LP AIR 8-76-0-E PP (2-73-2)-4P-F C- (2-73-2)-1P-F C- (6-81-1)-1L-B4 LF CKT C-1B IC CKT C-2B IC (5-82-1)-1P-A C- (5-82-1)-1P-B C- (5-82-1)-1P-C C- (5-82-1)-1P-F C-

ATTACHMENT LIST:
1. ENCLOSURE-01 (3819P25001A01-Engrg Inst.pdf) saved on 13-MAR-2025 0000.

ZONE MANAGER:	ZONE:	COMPARTMENT:	LEVEL:	FRAME:	SIDE:
TAKAHASHI ,YASUHIKO					

JO:	KO:	TOTAL MAN HRS:	TOTAL MAT'L COST	TOTAL DURATION:	PLANNING ACCEPTANCE:
3819P25001	A01				

CU PHASE DESCRIPTION:
The purpose of this TGI is to accomplish the requirements of SA98081D forced draft blower vane actuator for each forced draft blower.
Location of Work:
Blower Room (5-79-0-E)
Uptake Space (5-76-0-Q)
Fire Room (8-76-0-E)
Passage (2-64-0-L)
Oil Lab (5-83-1-Q)
Contractor Facility

TASK NAME	SHOP	TSD/WC	TS	CREW#	MHRS	HIGH RAD HOURS	RC GRID#
5.1 SFTR, LBR							
5.2 IMCH, SFTR, WELD, QA							
5.3 OMCH, SFTR, WELD, PNTR, RGRS, QA, INSL							
5.4 PFTR, PNTR, RGRS, SFTR, WELD, QA							
5.5 SFTR,WELD, PNTR, RGRS, QA, IMCH							
5.6 ELEC, SFTR, WELD, INSL, PNTR, RGRS, QA, SMTL							
5.7 PNTR, QA							
Machinery Work CFM: MISC such as other consumable.							
Piping Work CFM: firewatch, lead analysis cost, paint material and MISC such as other consumable.							

TGI NO.:	FORCED DRAFT BLOWERS	AY	A	0
SHIP:	LCC-19	CHG/VER:		1/0

TASK NAME	SHOP	TSD/WC	TS	CREW#	MHRS	HIGH RAD HOURS	RC GRID#
Structural Work CFM: marine chemist, all paints, grits including disposal cost, thinner, fasteners, fire watch cost, lead analysis cost, asbestos sampler cost and analysis cost for compartment insulation, air compressor rental cost and fuel oil cost for air hose test, ---continue to below---							
---continued from above--- and misc such as temporary closure, electrodes, gases, enclosing/covering materials, and other consumable.							
Electrical Work CFM: cableway installation material, air compressor rental cost, fuel oil cost for air hose test, fabricate label plate and including miscellaneous material.							
Process Funding Document.							

APPENDIX "M"
TGI MATERIAL LIST

SYSTEM:	PLANT NO.:	COMPONENT NAME:	TYPE:	PHASE:	REPEAT:	CU PH VERSION:	CASREP CAT:
		FORCED DRAFT BLOWERS	AY	A	0	0	

CU PHASE TITLE:
F/O – SA98081D FORCED DRAFT BLOWER VANE ACTUATOR 5-79-0-E

MATERIAL REFERENCES

REF NO.	DOCUMENT/DRAWING NUMBER	DOCUMENT/DRAWING TITLE	REV
1	303-8894428		
2	302-8894389		
3	401-8895251		
4	113-8787308		
5	513-8895001		
6	204-8783650		
7	LAR SRFY0035-25		

JOB ORDER:	KEY OP:
3819P25001	A01

MATERIAL LIST

ITEM NO.	PC NO.	REF NO.	M / C	DESCRIPTION	STOCK NUMBER	GENERIC MATL TYPE	LVL	QA	HAZ MAT	DOC NO.	QTY REQD/ UNIT	QTY USED/ UNIT
001	1	1	M	CABLE,POWER,ELECTRI, ORDER FOR KTR ORIG: C-226 Y. TSUCHIYA 080-9350-1436	9B 6145 012019494 EY		NA	4	N	50135223	20/FT	
002	2	2	M	TRANSFORMER,POWER, ORDER FOR KTR ORIG: C-226 Y. TSUCHIYA 080-9350-1436	9B 5950 005480481		NA	4	N	50145003	3/EA	
003	3	2	M	PANEL,POWER DISTRIB, ORDER FOR KTR ORIG: C-226 Y. TSUCHIYA 080-9350-1436	3B 6110 015819912		NA	4	N	50135197	1/EA	

NOTES:

TGI NO.:	FORCED DRAFT BLOWERS	AY	A	0
SHIP:	LCC-19	CHG/VER:		1/0

MATERIAL LIST

ITEM NO.	PC NO.	REF NO.	M / C	DESCRIPTION	STOCK NUMBER	GENERIC MATL TYPE	LVL	QA	HAZ MAT	DOC NO.	QTY REQD/ UNIT	QTY USED/ UNIT
003	3	2	M	PANEL,POWER DISTRIB, ORDER FOR KTR ORIG: C-226 Y. TSUCHIYA 080-9350-1436	9B 6110 013798006		NA	4	N	51275066	1/EA	
004	4	2	M	CIRCUIT BREAKER, ORDER FOR KTR ORIG: C-226 Y. TSUCHIYA 080-9350-1436	9B 5925 002047494		NA	4	N	50135222	8/EA	
005	5	2	M	YOKE,CIR, ORDER FOR KTR ORIG: C-226 Y. TSUCHIYA 080-9350-1436	9B 5925 002020938		NA	4	N	50135249	4/EA	
006	6	2	M	CABLE,POWER,ELECTRI, ORDER FOR KTR ORIG: C-226 Y. TSUCHIYA 080-9350-1436	9B 6145 012028463		NA	4	N	50135202	150/FT	
007	7	2	M	CABLE,POWER,ELECTRI, ORDER FOR KTR ORIG: C-226 Y. TSUCHIYA 080-9350-1436	9B 6145 012019499		NA	4	N	50135204	180/FT	
008	8	2	M	CABLE,POWER,ELECTRI, ORDER FOR KTR ORIG: C-226 Y. TSUCHIYA 080-9350-1436	9B 6145 012023478		NA	4	N	50135205	20/FT	
009	1	3	M	JUNCTION BOX, ORDER FOR KTR ORIG: C-226 Y. TSUCHIYA 080-9350-1436	9B 5975 013189256		NA	4	N	50135221	1/EA	
010	2	3	M	RESISTOR,VARIABLE,W, ORDER FOR KTR ORIG: C-226 Y. TSUCHIYA 080-9350-1436	9B 5905 014246859		NA	4	N	50135220	4/EA	
011	3	3	M	TRANSMITTER SUBASSE, ORDER FOR KTR ORIG: C-226 Y. TSUCHIYA 080-9350-1436	9B 5895 014421010		NA	4	N	50135196	4/EA	
012	5	3	M	TERMINAL BOARD, ORDER FOR KTR ORIG: C-226 Y. TSUCHIYA 080-9350-1436	9B 5940 009836084		NA	4	N	50135219	4/EA	
013	6	3	M	WIRE,ELECTRICAL, ORDER FOR KTR ORIG: C-226 Y. TSUCHIYA 080-9350-1436	9B 6145 002754014		NA	4	N	50135218	20/FT	
014	7	3	M	CABLE,POWER,ELECTRI, ORDER FOR KTR ORIG: C-226 Y. TSUCHIYA 080-9350-1436	9B 6145 012053632		NA	4	N	50135208	350/FT	
015	8	3	M	PANEL,BLANK, ORDER FOR KTR ORIG: C-226 Y. TSUCHIYA 080-9350-1436	9B 5975 009520890		NA	4	N	50135217	1/EA	
016	9	3	M	SCREW,MACHINE, ORDER FOR KTR ORIG: C-226 Y. TSUCHIYA 080-9350-1436	9B 5305 000546672		NA	4	N	50135216	1/HD	
017	10	3	M	NUT,SELF-LOCKING,HE, ORDER FOR KTR ORIG: C-226 Y. TSUCHIYA 080-9350-1436	9B 5310 015313946		NA	4	N	50245345	16/EA	
017	10	3	M	NUT,SELF-LOCKING,HE, ORDER FOR KTR ORIG: C-226 Y. TSUCHIYA 080-9350-1436	9B 5310 015313946		NA	4	N	50135215	16/EA	

MATERIAL LIST

ITEM NO.	PC NO.	REF NO.	M / C	DESCRIPTION	STOCK NUMBER	GENERIC MATL TYPE	LVL	QA	HAZ MAT	DOC NO.	QTY REQD/ UNIT	QTY USED/ UNIT
018	11	3	M	WASHER,FLAT, ORDER FOR KTR ORIG: C-226 Y. TSUCHIYA 080-9350-1436	9B 5310 004803641		NA	4	N	50135214	16/EA	
019	12	3	M	STUFFING, ORDER FOR KTR ORIG: C-226 Y. TSUCHIYA 080-9350-1436	9B 5975 002964092		NA	4	N	50135250	8/EA	
020	13	3	M	PLUG,STUFFING TUBE, ORDER FOR KTR ORIG: C-226 Y. TSUCHIYA 080-9350-1436	9B 5975 002963863		NA	4	N	50135232	4/PG	
021	14	3	M	O-RING, ORDER FOR KTR ORIG: C-226 Y. TSUCHIYA 080-9350-1436	9B 5331 005798156		NA	4	N	50135251	8/EA	
022	1	4	M	PLATE,ME, ORDER FOR KTR ORIG: C-226 Y. TSUCHIYA 080-9350-1436	9B 9515 002336261		NA	4	N	50135252	1/PM	
023	2	4	M	PLATE,ME, ORDER FOR KTR ORIG: C-226 Y. TSUCHIYA 080-9350-1436	9B 9515 002336266		NA	4	N	50135254	1/PM	
024	3	4	M	PLATE,ME, 1 PLATE = 5FT X 2FT REQUIRED ORDER FOR KTR ORIG: C-226 Y. TSUCHIYA 080-9350-1436	9B 9515 002243086		NA	4	N	50135255	10/SF	
025	4	4	M	TUBE,METALLIC, ORDER FOR KTR ORIG: C-226 Y. TSUCHIYA 080-9350-1436	9B 4710 013058994		NA	4	N	50135231	1/EA	
026	5	4	M	PIPE,METALLIC, ORDER FOR KTR ORIG: C-226 Y. TSUCHIYA 080-9350-1436	9B 4710 002778712		NA	4	N	50135230	20/FT	
027	6	4	M	PIPE,METALLIC, ORDER FOR KTR ORIG: C-226 Y. TSUCHIYA 080-9350-1436	9B 4710 002778676		NA	4	N	50135200	10/FT	
028	7	4	M	SCREW,CAP,HEXAGON H, SCREW, CAP HEX, SPEC: MIL-DTL-1222, SIZE: 3/8"-16UNC-2A X 1-3/4"LG, MATL: STEEL GRADE 5, FINISH: ZINC COATING, ORDER FOR KTR ORIG: C-226 Y. TSUCHIYA 080-9350-1436	9B 5305 LL9801846		NA	4	N	50167456	16/EA	
029	8	4	M	NUT,SELF, NUT, SELF-LOCKING, HEX, NON-METALLIC INSERT, 250 DEG F, SPEC: NASM25027, MS17829Z6C, SIZE: 3/8"-16UNC-3B, MATL: STEEL, FINISH: ZINC-PLATE, DO NOT CROSS NSN 5310-01-358-7622 (CRES MATL), NSN: 5310-01-527-1539 (SMIC X6), ORDER FOR KTR ORIG: C-226 Y. TSUCHIYA 080-9350-1436	9B 5310 LL9005707		NA	4	N	50137605	16/EA	

MATERIAL LIST

ITEM NO.	PC NO.	REF NO.	M / C	DESCRIPTION	STOCK NUMBER	GENERIC MATL TYPE	LVL	QA	HAZ MAT	DOC NO.	QTY REQD/ UNIT	QTY USED/ UNIT
030	9	4	M	WASHER,FLAT, ORDER FOR KTR ORIG: C-226 Y. TSUCHIYA 080-9350-1436	9B 5310 015927556		NA	4	N	50135199	16/EA	
031	10	4	M	SCREW, HEX CAP, SCREW, HEX CAP, SPEC: MIL-DTL-1222, TYPE I, GRADE 5 SIZE: 5/16"-18UNC-2A X 1-1/2"LG, MATL: STEEL, FINISH: ZINC COATED, ORDER FOR KTR ORIG: C-226 Y. TSUCHIYA 080-9350-1436	9B 5305 LL9605928		NA	4	N	50167455	4/EA	
032	11	4	M	NUT, SELF-LOCKING, NUT, SELF-LOCKING, HEX, NON-METALLIC INSERT, 250 DEG F, SPEC: NASM25027, MS17829Z5C, SIZE: 5/16"-18UNC-3B, MATL: STEEL, FINISH: ZINC PLATE, DO NOT CROSS NSN: 5310-01-485-9220 (SMIC: X3) AND 5310-01-623-4029 (NOT ZINC), ORDER FOR KTR ORIG: C-226 Y. TSUCHIYA 080-9350-1436	9B 5310 LL4601673		NA	4	N	50167448	4/EA	
033	12	4	M	WASHER,FLAT, ORDER FOR KTR ORIG: C-226 Y. TSUCHIYA 080-9350-1436	9B 5310 012590296		NA	4	N	50135198	4/EA	
034	F1	5	M	CAP, TUBE FITTING CAP, TUBE OD: 1/4", FITTING TYPE: TWO FERRULE TUBE FITTING A-LOK, PRODUCT TYPE: COMPRESSION FITTINGS, MATL: BRASS, ORDER FOR KTR ORIG: C226 Y.TSUCHIYA 080-9350-1436	9B 4730 LL9311185		NA	4	N	50277471	8/EA	
035	F2	5	M	CAP, TUBE FITTING CAP, TUBE OD: 3/8", FITTING TYPE: TWO FERRULE TUBE FITTING A-LOK, PRODUCT TYPE: COMPRESSION FITTINGS, MATL: BRASS, ORDER FOR KTR ORIG: C-226 Y.TSUCHIYA 080-9350-1436	9B 4730 LL9311184		NA	4	N	50277468	4/EA	
036	F1	6	M	ACTUATOR,MECHANICAL, ORDER FOR KTR ORIG: C-226 Y. TSUCHIYA 080-9350-1436	3B 1680 016789889		NA	4	N	50165005	4/EA	

MATERIAL LIST

ITEM NO.	PC NO.	REF NO.	M / C	DESCRIPTION	STOCK NUMBER	GENERIC MATL TYPE	LVL	QA	HAZ MAT	DOC NO.	QTY REQD/ UNIT	QTY USED/ UNIT
037	F3	6	M	SETSCREW, SETSCREW, HEXAGON CUP-POINT THEADLESS, SPEC: ASME B18.3, ASTM F912, SIZE: 1/4"-20UNC-3A X 1/2" LG, LOCKING TYPE: THREAD LOCKER, THREAD LOCKER TYPE: NYLON PATCH, MATL: ALLOY STEEL, FINISH: BLECK-OXIDE, DO NOT CROSS NSN: 5305-01-534-2836(OBSOLETE),	9B 5305 LL9100955		NA	4	N	50917455	1/PG	
038	F4	6	M	BALL JOINT ROD, LUBRICATION-FREE BALL JOINT ROD END, SHANK THREAD SIZE: 1/2"-20, ID: 1/2", MAXIMUM BALL SWIVEL: 12 DEG, WIDTH: 1-5/16", THK: 5/8", SHANK CENTER LENGTH: 2-1/8", SHANK THREAD LENGTH: 1-1/16", SHANK THREAD DIRECTION: LEFT HAND, LOAD CAPACITY: 6450 LBS, MATL: CARBON STEEL, FINISH: ZINC PLATED	9B 3040 LL9100953		NA	4	N	50917453	4/EA	
039	F5	6	M	THREADED ROD, THREADED ROD, SIZE: 1/2"-20UNF-2A X 1 FT LG, TENSILE STRENGTH: 70000 PSI, THREAD DIRECTION: RIGHT HAND, THREADING: FULLY THREADED, MATL: 18-8 STAINLESS STEEL, ORDER FOR KTR ORIG: C-226 Y. TSUCHIYA 080-9350-1436	9B 5306 LL9100951		NA	4	N	50917451	4/EA	
040	F6	6	M	THREADED ROD, THREADED ROD, SIZE: 1/2"-20UNF-2A X 1FT LG, TENSILE STRENGTH: 70000 PSI, THREAD DIRECTION: LEFT HAND, THREADING: FULLY THREADED, MATL: 18-8 STAINLESS STEEL, ORDER FOR KTR ORIG: C-226 Y. TSUCHIYA 080-9350-1436	9B 5306 LL9100950		NA	4	N	50917450	4/EA	
041	F7	6	M	NUT,PLAIN,HEXAGON, ORDER FOR KTR ORIG: C-226 Y. TSUCHIYA 080-9350-1436	9B 5310 009895525		NA	4	N	50155187	16/EA	
042	F8	6	M	HEXAGON BAR, HEXAGON BAR, SPEC: ASTM A108 GRADE: 1215, WIDTH: 1", LENGTH: 1 FT, YIELD STRENGTH: 60000 PSI, FABRICATION: COLD WORKED, MATL: CARBON STEEL, ORDER FOR KTR ORIG: C226 Y. TSUCHIYA 080-9350-1436	9B 9510 LL9100952		NA	4	N	50917452	4/EA	

TGI NO.:	FORCED DRAFT BLOWERS	AY	A	0
SHIP:	LCC-19	CHG/VER:		1/0

MATERIAL LIST

ITEM NO.	PC NO.	REF NO.	M / C	DESCRIPTION	STOCK NUMBER	GENERIC MATL TYPE	LVL	QA	HAZ MAT	DOC NO.	QTY REQD/ UNIT	QTY USED/ UNIT
043	F9	6	M	SHOULDER SCREW, SHOULDER SCREW SELF-LOCKING, SPEC: ASME 18.3, ASTM A574, DRIVE STYLE: HEXAGON, SHOULDER DIA: 5/8", SHOULDER LENGTH: 1-1/4", THREAD SIZE: 1/2-13UNC-3A, THREAD LENGTH: 3/4", HEAD DIA: 7/8", THREAD LOCKER TYPE: NYLON PELLET ORDER FOR KTR ORIG: C226 Y. TSUCHIYA 080-9350-1436	9B 5305 LL9100954		NA	4	N	50917454	4/EA	
044	F11	6	M	BAR,METAL, ORDER FOR KTR ORIG: C-226 Y. TSUCHIYA 080-9350-1436	9B 9510 005419656		NA	4	N	50155221	1/FT	
045	F12	6	M	PLATE,ME, ORDER FOR KTR ORIG: C-226 Y. TSUCHIYA 080-9350-1436	9B 9515 002336269		NA	4	N	50155225	1/PM	
046	F13	6	M	SCREW,CAP,HEXAGON H, ORDER FOR KTR ORIG: C-226 Y. TSUCHIYA 080-9350-1436	9B 5305 012862636		NA	4	N	50155197	1/BX	
047	F14	6	M	NUT,PLAIN,HEXAGON, ORDER FOR KTR ORIG: C-226 Y. TSUCHIYA 080-9350-1436	9B 5310 012945273		NA	4	N	50155191	1/BX	
100			M	INSULATI, ORIG: C231B T. ASHINA 243-4370, ORDERED FOR KTR	9Q 5640 008096312		NA	4	N	50625117	3/EA	
101			M	INSULATI, ORIG: C231B T. ASHINA 243-4370, ORDERED FOR KTR	9Q 5640 008096315		NA	4	N	50625118	3/EA	
102			M	SOUND CO, ORIG: C231B T. ASHINA 243-4370, ORDERED FOR KTR	9Q 5640 007565866		NA	4	N	50625115	3/SH	
103			M	INSULATI, ORIG: C231B T. ASHINA 243-4370, ORDERED FOR KTR	9B 2510 016490178		NA	4	N	50625121	3/EA	
104			M	TAPE,TEX, ORIG: C231B T. ASHINA 243-4370, ORDERED FOR KTR	9B 8315 002671632		NA	4	N	50625120	1/RO	
105			M	TAPE,TEX, ORIG: C231B T. ASHINA 243-4370, ORDERED FOR KTR	9B 8315 002671633		NA	4	N	50625116	1/RO	
106			M	ADHESIVE, ORIG: C231B T. ASHINA 243-4370, ORDERED FOR KTR	9B 8040 002738708		NA	4	Y	50625114	1/GL	
107			M	ANGLE,STRUCTURAL, 2 EA X 10FT CONTINUOUS LENGTH ORIG: C231B T. ASHINA 243-4370, ORDERED FOR KTR	3B 9520 009545666		NA	4	N	50625110	20/FT	
108			M	PLATE,ME, 3FT X 1FT X 1PM ORIG: C231B T. ASHINA 243-4370, ORDERED FOR KTR	9B 9515 001533184		NA	4	N	50625112	3/SF	
109			M	ANGLE,ST, 2EA X 10FT CONTINUOUS LENGTH ORIG: C231B T. ASHINA 243-4370, ORDERED FOR KTR	9B 9520 002897013		NA	4	N	50625106	20/FT	

MATERIAL LIST

ITEM NO.	PC NO.	REF NO.	M / C	DESCRIPTION	STOCK NUMBER	GENERIC MATL TYPE	LVL	QA	HAZ MAT	DOC NO.	QTY REQD/ UNIT	QTY USED/ UNIT
300			M	STANDOFF,THREADED,S, ORDERED FOR CONTRACTOR ORIG: CODE 233 S.OGAWA 090-6170-8579	9B 5340 002829526		NA	4	N	50655066	1/HD	
301			M	NUT,PLAIN,HEXAGON, ORDERED FOR CONTRACTOR ORIG: CODE 233 S.OGAWA 090-6170-8579	9B 5310 009138881		NA	4	N	50655092	1/HD	
302			M	WASHER,LOCK, ORDERED FOR CONTRACTOR ORIG: CODE 233 S.OGAWA 090-6170-8579	9B 5310 001947356		NA	4	N	50655067	1/HD	
303		7	M	SWITCH,TOGGLE, ORDERED FOR CONTRACTOR ORIG: CODE 233 S.OGAWA 090-6170-8579	9B 5930 008522407		NA	4	N	50655032	4/EA	

FOUO

☐ NUCLEAR

APPENDIX "D"
DEFICIENCY FORM

☐ NON-NUCLEAR

1. SHIP/HULL NO.:	2a. DL or DR No. (Circle One)	2b. REVISION:	3a. COMPONENT NAME:	3b. TYPE:	3c. PHASE:	3d. REPEAT:
LCC-19			FORCED DRAFT BLOWERS	AY	A	0

4a. ICN:	4b. KEY OP:	5. LOC SPACE/LVL: FRAME: P/S/C:	6. CAUSED BY:
3819P25001	A01		

7. DESCRIPTION:

8. ORIGINATOR:	NAME:	BADGE:	SHOP/CODE:	DATE:	PHONE NO.:

9. CORRECTIVE ACTION:

10. EVALUATOR:	NAME:	BADGE:	SHOP/CODE:	DATE:	PHONE NO.:

FOR NON-NUCLEAR USE ONLY

11. RFD/RFW REQ'D ☐ LAR REQ'D ☐ ILS MOD REQ'D ☐

SRD/PLAN REV REQ'D ☐ DWG NO.: _____ S/A NO.: _____

12. ISOLATION SATISFACTORY:	SIGN:	BADGE:	SHOP/CODE:	DATE:	PHONE NO.:

13. SUBSAFE OQE RECORD? YES ☐ NO ☐	SIGN:	BADGE:	SHOP/CODE:	DATE:	PHONE NO.
14. CORRECTIVE ACTION COMPLETE:	SIGN:	BADGE:	SHOP/CODE:	DATE:	PHONE NO.
15. INSPECTION REQ'D? :YES ☐ NO ☐	INSPECTION COMPLETE/SIGN:	BADGE:	SHOP/CODE:	DATE:	PHONE NO.
16. RECORDS REVIEW COMPLETE (DR ONLY)	SIGN:	BADGE:	SHOP/CODE:	DATE:	PHONE NO.

DL's ISSUED (DR ONLY)								

☐ NUCLEAR **Deficiency Form Continuation Sheet** ☐ NON-NUCLEAR

1. SHIP/HULL NO.:	2a. DL or DR No. (Circle One)	2b. REVISION:	3a. COMPONENT NAME:	3b. TYPE:	3c. PHASE:	3d. REPEAT:
LCC-19			FORCED DRAFT BLOWERS	AY	A	0

LIST OF MATERIAL (QUANTITY FOR ONE SHIP)

ITEM NO	QTY REQD	DESCRIPTION	LAST NO. USED	PCS REQD	MATERIAL SPEC	MATL REQD	NSN/MFR PART NO.	APL/PN/ VIEW NO.	SOURCE	WEIGHT UNIT	WEIGHT TOTAL	REMARKS
1	8.9 SF	PLATE, 10.2# (1/4 THK)	6	37	ABS GR-A	STEEL DS	9B 9515-01-409-2741		IAF	10.2	90.8	NSN ORDERS 8' X 33'
2	5.1 SF	PLATE, 20.4# (1/2 THK)		4	ABS GR-A	STEEL DS	9B 9515-00-153-3241		IAF	20.4	104.0	NSN ORDERS 8' X 33'
3	5.2 SF	PLATE, 10.2# (1/4 THK)		4	ABS GR-DH36	STEEL HS	9B 9515-01-416-0552		IAF	10.2	53.0	NSN ORDERS 8' X 33'
4	3 FT	TUBING, SQUARE 2 X 2 X 1/4		1	ASTM-A-500 GR-B	STEEL	9B 4710-01-305-8994		IAF	5.41	16.2	NSN ORDERS 20' LENGTH
5	11.7 FT	PIPE, 4 NPS, SCHEDULE 40		4	ASTM A53 TYPE-S, GR-B	BLACK STEEL	9B 4710-00-277-8712		IAF	10.8	126.4	PLAIN ENDS
6	5.7 FT	PIPE, 2 NPS, SCHEDULE 80		4	ASTM A53 TYPE-S, GR-B	BLACK STEEL	9B 4710-00-277-8676		IAF	5.03	28.7	PLAIN ENDS
7	16 EA	SCREW, HEX, CAP 3/8-16UNC-2A X 1-3/4 LG			MIL-DTL-1222 TYPE-I, GR-5	ALLOY STEEL	9B 5305-01-286-2636 M1222RN6C228GFNZX		IAF	0.06	1.0	ZINC COATED
8	16 EA	NUT, HEX, SELF-LOCK 3/8-16UNC-3B			NASM17829	STEEL	9B 5310-01-358-7622 MS17829Z6C		IAF	-	-	ZINC PLATED
9	16 EA	WASHER, FLAT, PLAIN 0.438 ID X 1.000 OD X 0.084 THK			MS51412	STEEL	9B 5310-01-592-7556 MS51412-39		IAF	0.01	0.2	ZINC PLATED
10	4 EA	SCREW, HEX, CAP 5/16-18UNC-2A X 1-1/2 LG			MIL-DTL-1222 TYPE-I, GR-5	ALLOY STEEL	M1222RN5C224GFNZX		IAF	0.03	0.1	ZINC COATED
11	4 EA	NUT, HEX, SELF-LOCK 5/16-18UNC-3B			NASM17829	STEEL	9B 5310-01-623-4029 MS17829Z5C		IAF	-	-	ZINC PLATED DON'T USE NIIN 002453424
12	4 EA	WASHER, FLAT, PLAIN 0.375 ID X 0.875 OD X 0.083 THK			MS51412	STEEL	9B 5310-01-259-0296 MS51412-6		IAF	0.01	-	ZINC PLATED

LIST OF MATERIAL TO BE REMOVED (QUANTITY FOR ONE SHIP)

ITEM NO	QTY RMVD	DESCRIPTION	DISPOSITION SCRAP	DISPOSITION FWD	DISPOSITION RETAIN	AS BUILT REF	TYPE OF MATERIAL	NSN/MFR PART NO.	APL/PN/ VIEW NO.	UNIT HEAT (BTU/HR)	WEIGHT UNIT	WEIGHT TOTAL	REMARKS
R1	4 EA	TUBE PROTECTION COVERS	4				STEEL				14.68	58.7	
R2	1 EA	UNIFLEX FDB OPERATOR FDN	1			3	STEEL				113.3	113.3	
R3	1 EA	BATTLE LANTERN FDN	1				STEEL				4.4	4.4	

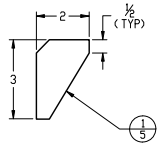

DETAIL 28-D
CHOCK DETAIL
SCALE: 6"=1'-0"
(28-A)

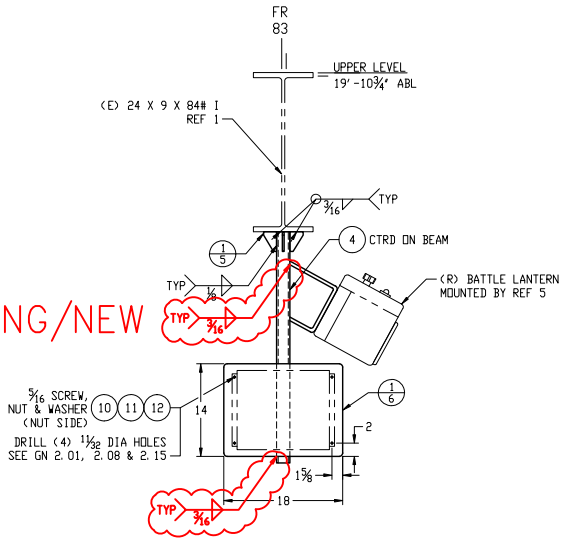

FWD

ELEVATION 30-A
STBD LKG OUTBD
SCALE: 1½"=1'-0"
(28-A)

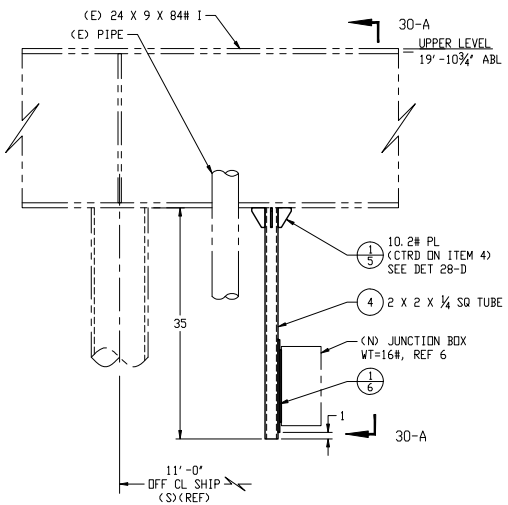

SECTION 28-A
STBD LKG AFT
SCALE: 1½"=1'-0"
(26-A)

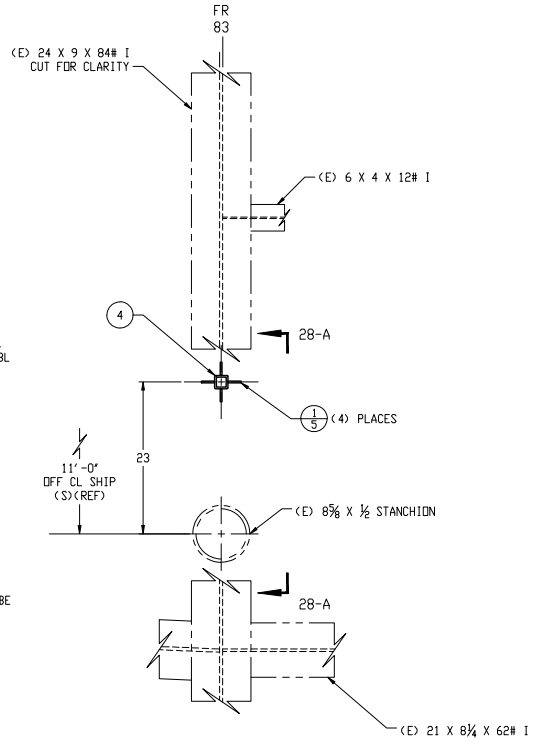

PLAN 26-A
INSTALLATION - UPPER LEVEL
FIRE ROOM (8-76-0-E)
SCALE: 1½"=1'-0"
(10-D)

FWD

DISTRIBUTION STATEMENT D: DISTRIBUTION AUTHORIZED TO DOD AND DOD CONTRACTORS ONLY; TO PROTECT CRITICAL TECHNOLOGY; FOR DATE USE THE APPROVED DATE OF THIS DOCUMENT. OTHER U.S. REQUESTS SHALL BE REFERRED TO THE APPROPRIATE HULL PLANNING YARD.

HULL NUMBER	SIZE	CAGE No.	WT GRP	NAVSEA DRAWING No.	REV
LCC19	F	53711	113	8787308	-
	SCALE: AS SHOWN		CODE/DEPT: 280.51	SHEET: 4	

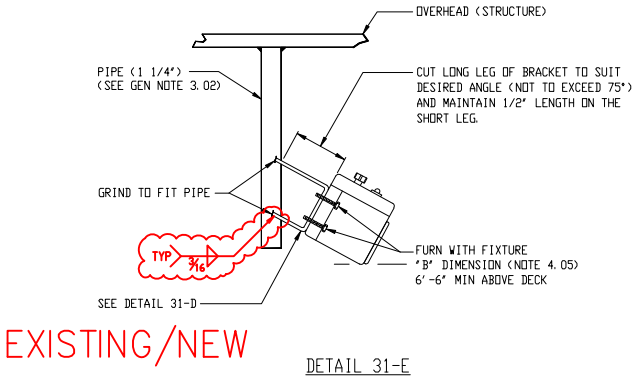

DETAIL 31-E

OVERHEAD MOUNTING DETAIL OF HANDLANTERN
(SYMBOL 101.3L)

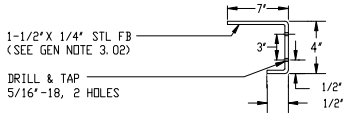

DETAIL 31-D

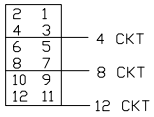

CIRCUIT LOCATION FOR PANELS
AND SWITCHED FUSE BOXES

LIST OF MATERIAL (QUANTITY FOR ONE SHIP)

ITEM NO.	QTY REQD	DESCRIPTION	SYMBOL	SYMBOL NUMBER	MATERIAL SPEC	MATL REQD	NSN/MFR PART NO.	APL/PN/ VIEW NO.	SOURCE	WEIGHT UNIT	WEIGHT TOTAL	REMARKS
1	10 FT	CABLE, TYPE LSDHOF-3, FLEXING, NON-WATERTIGHT		DHOF-3	MIL-DTL-24643/3		9B 6145-01-201-9494 M24643/3-10UN		IAF	0.101	1.0	SEE NOTE 4.12
2	1 EA	HAND LANTERN, LED, WT, 115V, WHITE, W/RELAY, RECHARGEABLE							R	10.5	10.5	RETAINED AS ITEM R1 SYM 101.3L

LIST OF MATERIAL TO BE REMOVED (QUANTITY FOR ONE SHIP)

ITEM NO	QTY RMVD	DESCRIPTION	DISPOSITION SCRAP	DISPOSITION FWD	DISPOSITION RETAIN	AS BUILT REF	TYPE OF MATERIAL	NSN/MFR PART NO.	APL/PN/ VIEW NO.	UNIT HEAT (BTU/HR)	WEIGHT UNIT	WEIGHT TOTAL	REMARKS
R1	1 EA	HAND LANTERN, LED, WT, 115V, WHITE, W/RELAY, RECHARGEABLE			1						10.5	10.5	RETAIN AS ITEM 2 SYM 101.3L

DISTRIBUTION STATEMENT D: DISTRIBUTION AUTHORIZED TO DOD AND DOD CONTRACTORS ONLY; TO PROTECT CRITICAL TECHNOLOGY; FOR DATE USE THE APPROVED DATE OF THIS DOCUMENT. OTHER U.S. REQUESTS SHALL BE REFERRED TO THE APPROPRIATE HULL PLANNING YARD.

HULL NUMBER	SIZE	CAGE NO.	WT GRP	NAVSEA DRAWING NO.	REV
LCC19	F	53711	303	8894428	-
	SCALE:NONE		CODE/DEPT:280.01	SHEET 4	