TASK GROUP INSTRUCTION
AIM REV 20.11.4.0 (OCTOBER 2020)

TGI NO.:	COMPONENT NAME:	TYPE:	PHASE:	REPEAT:	CHANGE:
	STRUCT 6-86-0-E	AY	A	0	1

SHIP/HULL NO.:	SHIP/HULL NAME:	SYSTEM:	PROJ/WO NO:	CASREP CAT:
LCC-19	USS BLUE RIDGE		19P	

CU PHASE TITLE:
F/O - REPAIR STRUCTURAL MEMBER IN 6-86-0-E

PREPARING ACTIVITY:

	CODE	PHONE	DATE
PREPARED BY: TOMOHIKO ANDO	231B	315-243-4372	09-APR-2025
APPROVED BY: RYOUTA TAKAGI	231B	315-243-4502	09-APR-2025
CONCURRED BY:			
CONCURRED BY:			
CONCURRED BY:			
CONCURRED BY:			

REASON FOR WORK/NEED FOR CHANGE:
Revising of QA Form 28 Enclosure-04-13 and Enclosure 04-14 is required.

CHANGE INSTRUCTIONS:
CH1: Revising of QA Form 28 Enclosure-04-13 and Enclosure 04-14. (4/17/2025)

SPECIAL REQUIREMENTS:

This work affects a fire zone boundary. Fabrication and/or staging of a non-flammable closure is required.

CLEANLINESS FOR PIPING SYSTEM/EQUIPMENT LEVEL II AND III

CLASS P-1 PIPING

CLASS P-2 PIPING

WORK CERTIFICATION SIGNATURES

COMPLETION OF WORK REVIEW:	BADGE NO.:	SHOP/CODE:	PHONE:	DATE:

ACCEPTANCE OF COMPLETED WORK

PHYSICAL INSPECTION REQUIRED: ☐YES ☒NO	PHYSICAL INSPECTION COMPLETED:	BADGE NO.:	SHOP/CODE:	PHONE:	DATE:
RECORDS REVIEW:		BADGE NO.:	SHOP/CODE:	PHONE:	DATE:

3819P123AGA01

FOUO: Public availability to be determined under 5 USC 552

LIST OF EFFECTIVE PAGES									
SHT NO.	CHG NO.	SHT NO.	CHG NO.	SHT NO.	CHG NO.	SHT NO.	CHG NO.	SHT NO.	CHG NO.
1-24		Map (1-10)							
J1-2		QA 20 (1-60)							
M1-13		QA 28 (1-17)							
Sketch (1)									

1. **SCOPE/PURPOSE**

1.1 Title: Structural Member in 8-86-0-E; repair

1.2 Location of Work:

1.2.1 Engine Room Enclosed Operating Station (6-86-0-E)

1.2.2 Engine Room (8-86-0-E)

1.2.3 Fire Room (8-76-0-E)

1.2.4 Waste Water Bilge Sump (9-87-2-W)

1.2.5 N2B Cryptology Office (3-81-1-Q)

1.3 Identification:

1.3.1 Quantity (2 EA), Fiber Optic (FO) Cable for Switchboard Control Unit (SCU)

Ckt: K-EMPCS-FO-NTWK-A(1) and K-EMPCS-FO-NTWK-A(4)

1.3.2 Quantity (9 EA), Stuffing Tube

Remarks: See 2.4 for detail

1.3.3 Quantity (6 EA) Multiple Cable Transit (MCT) Assembly

Remarks: See 2.4 for detail

1.3.4 Quantity (One EA), Round Multiple Cable Penetrator (RMCP) Assembly

Remarks: See 2.4 for detail

1.3.5 Quantity (One EA), Variable Spring Hanger Assembly

System: Aux Exhaust Piping
Hanger No.: 4S16
Pipe Size of Hanger: 6 Inch IPS
Type of Hanger Assembly: 3A
Cold Load: 546 LBS
Hot Load: 585 LBS
Remarks: See Sheet 4 (Zone 29-C) of 2.5 for detail

1.3.6 Quantity (One EA), Hose Connection of Potable Water Piping, connection of the water fountain with potable water piping located in 1.2.2

Piping Size: 3/8 Inch IPS (0.675 Inch OD x 0.065 Inch WT)
Piping Material: Copper
Piping Specification: MIL-T-24107
Connection: Hose Clamp
Remarks: See Sheet One (Zone 10-B) of 2.6 for detail

1.3.7 Quantity (3 FT), Main Steam Gage Piping including Deck Sleeve

Size: 1/4 Inch IPS (0.540 Inch OD x 0.119 Inch WT)
Material: Chromium Molybdenum (Cr-Mo) Steel
Specification: MIL-P-24691/2
Gage No.: G7
Piping Class: P-1
Remarks: See 2.7, 2.8, 2.12, 2.13, and Mapping Plan Enclosure-02 for detail

1.3.7.1 Quantity (One EA), Coupling

Size: 1/4 Inch IPS
Material: Cr-Mo Steel
Specification: ASTM A182 GR F11 / ASME B16.11
Type: Socket Weld, 3,000 PSI
Piping Class: P-1

1.3.7.2 Quantity (One EA), Reducing Coupling

Size: 1/4 Inch IPS x 1/4 Inch OD
Material: CRES 304L
Specification: QQ-S-763 / 803-1385850
Type: Socket Weld, 6,000 PSI
Piping Class: P-1

1.3.7.3 Quantity (One EA), Deck Sleeve

Size: 1/4 Inch IPS
Material: Carbon Steel
Specification: ASTM A106 GR-B / 803-1385866
Piping Class: P-1

1.3.8 Quantity (3 FT), Astern Steam Inlet Gage Piping including Deck Sleeve

Size: 1/4 Inch IPS (0.540 Inch OD x 0.119 Inch WT)
Material: Cr-Mo Steel
Specification: MIL-P-24691/2
Gage No.: G54
Piping Class: P-1
Remarks: See 2.7, 2.8, 2.12, and Mapping Plan Enclosure-02 for detail

1.3.8.1 Quantity (One EA), Coupling

Size: 1/4 Inch IPS
Material: Cr-Mo Steel
Specification: ASTM A182 GR F11 / ASME B16.11
Type: Socket Weld, 3,000 PSI

Piping Class: P-1

1.3.8.2 Quantity (One EA), Reducing Coupling

Size: 1/4 Inch IPS x 1/4 Inch OD
Material: CRES 304L
Specification: QQ-S-763 / 803-1385850
Type: Socket Weld, 6,000 PSI
Piping Class: P-1

1.3.8.3 Quantity (One EA), Deck Sleeve

Size: 1/4 Inch IPS
Material: Carbon Steel
Specification: ASTM A106 GR-B / 803-1385866
Piping Class: P-1

1.3.9 Quantity (3 FT), Ahead Turbine Steam Inlet Gage Piping including Deck Sleeve

Size: 1/4 Inch IPS (0.540 Inch OD x 0.119 Inch WT)
Material: Cr-Mo Steel
Specification: MIL-P-24691/2
Gage No.: G55
Piping Class: P-1
Remarks: See 2.7, 2.8, 2.12, and Mapping Plan Enclosure-02 for detail

1.3.9.1 Quantity (One EA), Coupling

Size: 1/4 Inch IPS
Material: Cr-Mo Steel
Specification: ASTM A182 GR F11 / ASME B16.11
Type: Socket Weld, 3,000 PSI
Piping Class: P-1

1.3.9.2 Quantity (One EA), Reducing Coupling

Size: 1/4 Inch IPS x 1/4 Inch OD
Material: CRES 304L
Specification: QQ-S-763 / 803-1385850
Type: Socket Weld, 6,000 PSI
Piping Class: P-1

1.3.9.3 Quantity (One EA), Deck Sleeve

Size: 1/4 Inch IPS
Material: Carbon Steel
Specification: ASTM A106 GR-B / 803-1385866
Piping Class: P-1

1.3.10 Quantity (3 FT), High Pressure (HP) Turbine 1ST Stage Steam Gage Piping including Deck Sleeve

Size: 1/4 Inch IPS (0.540 Inch OD x 0.119 Inch WT)
Material: Cr-Mo Steel
Specification: MIL-P-24691/2
Gage No.: G56
Piping Class: P-1

Remarks: See 2.7, 2.8, 2.12, and Mapping Plan Enclosure-02 for detail

1.3.10.1 Quantity (One EA), Coupling

Size: 1/4 Inch IPS
Material: Cr-Mo Steel
Specification: ASTM A182 GR F11 / ASME B16.11
Type: Socket Weld, 3,000 PSI
Piping Class: P-1

1.3.10.2 Quantity (One EA), Reducing Coupling

Size: 1/4 Inch IPS x 1/4 Inch OD
Material: CRES 304L
Specification: QQ-S-763 / 803-1385850
Type: Socket Weld, 6,000 PSI
Piping Class: P-1

1.3.10.3 Quantity (One EA), Deck Sleeve

Size: 1/4 Inch IPS
Material: Carbon Steel
Specification: ASTM A106 GR-B / 803-1385866
Piping Class: P-1

1.3.11 Quantity (3 FT), Low Pressure (LP) Turbine Steam Inlet Gage Piping including Deck Sleeve

Size: 1/4 Inch IPS (0.540 Inch OD x 0.119 Inch WT)
Material: Carbon Steel
Specification: ASTM A106 (Existing) / MIL-P-24691/1 (New)
Gage No.: G58
Piping Class: P-1
Remarks: See 2.7, 2.8, 2.15, and Mapping Plan Enclosure-02 for detail

1.3.11.1 Quantity (One EA), Coupling

Size: 1/4 Inch IPS
Material: Carbon Steel
Specification: ASTM A105 / ASME B16.11
Type: Socket Weld, 3,000 PSI
Piping Class: P-1

1.3.11.2 Quantity (One EA), Reducing Coupling

Size: 1/4 Inch IPS x 1/4 Inch OD
Material: CRES 304L
Specification: QQ-S-763 / 803-1385850
Type: Socket Weld, 6,000 PSI
Piping Class: P-1

1.3.11.3 Quantity (One EA), Deck Sleeve

Size: 1/4 Inch IPS
Material: Carbon Steel
Specification: ASTM A106 GR-B / 803-1385866
Piping Class: P-1

1.3.12 Quantity (3 FT), 600 PSI Aux Steam Gage Piping including Deck Sleeve

Size: 1/4 Inch IPS (0.540 Inch OD x 0.119 Inch WT)
Material: Carbon Steel
Specification: MIL-P-24691/1
Gage No.: G16
Piping Class: P-1
Remarks: See 2.7, 2.8, 2.16 through 2.18, and Mapping Plan Enclosure-02 for detail

1.3.12.1 Quantity (One EA), Coupling

Size: 1/4 Inch IPS
Material: Carbon Steel
Specification: ASTM A105 / ASME B16.11
Type: Socket Weld, 3,000 PSI
Piping Class: P-1

1.3.12.2 Quantity (One EA), Reducing Coupling

Size: 1/4 Inch IPS x 1/4 Inch OD
Material: CRES 304L
Specification: QQ-S-763 / 803-1385850
Type: Socket Weld, 6,000 PSI
Piping Class: P-1

1.3.12.3 Quantity (One EA), Deck Sleeve

Size: 1/4 Inch IPS
Material: Carbon Steel
Specification: ASTM A106 GR-B / 803-1385866
Piping Class: P-1

1.3.13 Quantity (3 FT), Main Condenser Circulating Pump Steam Inlet Gage Piping including Deck Sleeve

Size: 1/4 Inch IPS (0.540 Inch OD x 0.119 Inch WT)
Material: Carbon Steel
Specification: MIL-P-24691/1
Gage No.: G17
Piping Class: P-1
Remarks: See 2.7, 2.8, 2.16, 2.17, and Mapping Plan Enclosure-02 for detail

1.3.13.1 Quantity (2 EA), Coupling

Size: 1/4 Inch IPS
Material: Carbon Steel
Specification: ASTM A105 / ASME B16.11
Type: Socket Weld, 3,000 PSI
Piping Class: P-1

1.3.13.2 Quantity (One EA), Deck Sleeve

Size: 1/4 Inch IPS
Material: Carbon Steel
Specification: ASTM A106 GR-B / 803-1385866
Piping Class: P-1

1.3.14 Quantity (3 FT), Main Turbine Gland Seal Steam Gage Piping including Deck Sleeve

Size: 1/4 Inch IPS (0.540 Inch OD x 0.119 Inch WT)
Material: Cr-Mo Steel
Specification: MIL-P-24691/2
Gage No.: G71
Piping Class: P-1
Remarks: See 2.7, 2.8, 2.19, and Mapping Plan Enclosure-02 for detail

1.3.14.1 Quantity (One EA), Coupling

Size: 1/4 Inch IPS
Material: Cr-Mo Steel
Specification: ASTM A182 GR F11 / ASME B16.11
Type: Socket Weld, 3,000 PSI
Piping Class: P-1

1.3.14.2 Quantity (One EA), Reducing Coupling

Size: 1/4 Inch IPS x 1/4 Inch OD
Material: CRES 304L
Specification: QQ-S-763 / 803-1385850
Type: Socket Weld, 6,000 PSI
Piping Class: P-1

1.3.14.3 Quantity (One EA), Deck Sleeve

Size: 1/4 Inch IPS
Material: Carbon Steel
Specification: ASTM A106 GR-B / 803-1385866
Piping Class: P-1

1.3.15 Quantity (3 FT), 1A Boiler Main Feedwater Discharge Gage Piping including Deck Sleeve

Size: 1/4 Inch IPS (0.540 Inch OD x 0.119 Inch WT)
Material: Carbon Steel
Specification: MIL-P-24691/1
Gage No.: G114
Piping Class: P-1
Remarks: See 2.7, 2.8, 2.9, 2.20, 2.21, and Mapping Plan Enclosure-02 for detail

1.3.15.1 Quantity (One EA), Coupling

Size: 1/4 Inch IPS
Material: Carbon Steel
Specification: ASTM A105 / ASME B16.11
Type: Socket Weld, 3,000 PSI
Piping Class: P-1

1.3.15.2 Quantity (One EA), Reducing Coupling

Size: 1/4 Inch IPS x 1/4 Inch OD
Material: CRES 304L
Specification: QQ-S-763 / 803-1385850
Type: Socket Weld, 6,000 PSI

Piping Class: P-1

1.3.15.3 Quantity (One EA), Deck Sleeve

Size: 1/4 Inch IPS
Material: Carbon Steel
Specification: ASTM A106 GR-B / 803-1385866
Piping Class: P-1

1.3.16 Quantity (3 FT), 1B Boiler Main Feedwater Discharge Gage Piping including Deck Sleeve

Size: 1/4 Inch IPS (0.540 Inch OD x 0.119 Inch WT)
Material: Carbon Steel
Specification: MIL-P-24691/1
Gage No.: G114
Piping Class: P-1
Remarks: See 2.7, 2.8, 2.9, 2.20, 2.21, and Mapping Plan Enclosure-02 for detail

1.3.16.1 Quantity (One EA), Coupling

Size: 1/4 Inch IPS
Material: Carbon Steel
Specification: ASTM A105 / ASME B16.11
Type: Socket Weld, 3,000 PSI
Piping Class: P-1

1.3.16.2 Quantity (One EA), Reducing Coupling

Size: 1/4 Inch IPS x 1/4 Inch OD
Material: CRES 304L
Specification: QQ-S-763 / 803-1385850
Type: Socket Weld, 6,000 PSI
Piping Class: P-1

1.3.16.3 Quantity (One EA), Deck Sleeve

Size: 1/4 Inch IPS
Material: Carbon Steel
Specification: ASTM A106 GR-B / 803-1385866
Piping Class: P-1

1.3.17 Quantity (3 FT), Aux Exhaust Steam Gage Piping including Deck Sleeve

Size: 1/4 Inch IPS (0.540 Inch OD x 0.119 Inch WT)
Material: Carbon Steel
Specification: ASTM A106 (Existing) / MIL-P-24691/1 (New)
Gage No.: G48
Remarks: See 2.7, 2.8, 2.22, and 2.23 for detail

1.3.17.1 Quantity (One EA), Deck Sleeve

Size: 1/4 Inch IPS
Material: Carbon Steel
Specification: ASTM A106 GR-B / 803-1385866

1.3.18 Quantity (3 FT), LP Turbine 4TH Stage Steam Extraction Gage Piping including Deck Sleeve

Size: 1/4 Inch IPS (0.540 Inch OD x 0.119 Inch WT)
Material: Carbon Steel
Specification: ASTM A106 (Existing) / MIL-P-24691/1 (New)
Gage No.: G59
Remarks: See 2.7, 2.8, 2.22, and 2.23 for detail

1.3.18.1 Quantity (One EA), Deck Sleeve

Size: 1/4 Inch IPS
Material: Carbon Steel
Specification: ASTM A106 GR-B / 803-1385866

1.3.19 Quantity (3 FT), HP Turbine Exhaust Steam and 8TH Stage Extraction Gage Piping including Deck Sleeve

Size: 1/4 Inch IPS (0.540 Inch OD x 0.119 Inch WT)
Material: Carbon Steel
Specification: ASTM A106 (Existing) / MIL-P-24691/1 (New)
Gage No.: G57
Remarks: See 2.7, 2.8, 2.15, and 2.22 for detail

1.3.19.1 Quantity (One EA), Deck Sleeve

Size: 1/4 Inch IPS
Material: Carbon Steel
Specification: ASTM A106 GR-B / 803-1385866

1.3.20 Quantity (3 FT), 150 PSI Aux Steam Gage Piping including Deck Sleeve

Size: 1/4 Inch IPS (0.540 Inch OD x 0.119 Inch WT)
Material: Carbon Steel
Specification: ASTM A106 (Existing) / MIL-P-24691/1 (New)
Gage No.: G32
Remarks: See 2.7, 2.8, 2.24, and 2.25 for detail

1.3.20.1 Quantity (One EA), Deck Sleeve

Size: 1/4 Inch IPS
Material: Carbon Steel
Specification: ASTM A106 GR-B / 803-1385866

1.3.21 Quantity (3 FT), Main Condenser Circulating Pump Lube Oil Gage Piping including Deck Sleeve

Size: 1/4 Inch IPS (0.540 Inch OD x 0.119 Inch WT)
Material: Carbon Steel
Specification: ASTM A106 (Existing) / MIL-P-24691/1 (New)
Gage No.: G261
Remarks: See 2.7, 2.8, and 2.17 for detail

1.3.21.1 Quantity (One EA), Deck Sleeve

Size: 1/4 Inch IPS
Material: Carbon Steel
Specification: ASTM A106 GR-B / 803-1385866

1.3.22 Quantity (3 FT), Lube Oil Remote Turbine Bearing Gage Piping including Deck Sleeve

Size: 1/4 Inch IPS (0.540 Inch OD x 0.119 Inch WT)
Material: Carbon Steel
Specification: ASTM A106 (Existing) / MIL-P-24691/1 (New)
Gage No.: G260
Remarks: See 2.7, 2.8, and 2.26 for detail

1.3.22.1 Quantity (One EA), Deck Sleeve

Size: 1/4 Inch IPS
Material: Carbon Steel
Specification: ASTM A106 GR-B / 803-1385866

1.3.23 Quantity (3 FT), Lube Oil Service Pump 1B Discharge Gage Piping including Deck Sleeve

Size: 1/4 Inch IPS (0.540 Inch OD x 0.119 Inch WT)
Material: Carbon Steel
Specification: ASTM A106 (Existing) / MIL-P-24691/1 (New)
Gage No.: G253
Remarks: See 2.7, 2.8, 2.26, and 2.27 for detail

1.3.23.1 Quantity (One EA), Deck Sleeve

Size: 1/4 Inch IPS
Material: Carbon Steel
Specification: ASTM A106 GR-B / 803-1385866

1.3.24 Quantity (3 FT), Main Condenser Vacuum Gage Piping including Deck Sleeve

Size: 1/4 Inch IPS (0.540 Inch OD x 0.065 Inch WT)
Material: Copper (Existing) / Cu-Ni 90-10 (New)
Specification: MIL-T-24107 / MIL-T-16420
Gage No.: G49
Remarks: See 2.7, 2.8, and 2.29 for detail

1.3.24.1 Quantity (One EA), Deck Sleeve

Size: 1/4 Inch IPS
Material: Carbon Steel
Specification: ASTM A106 GR-B / 803-1385866

1.3.25 Quantity (3 FT), Main Condenser 1A Condensate Pump Discharge Gage Piping including Deck Sleeve

Size: 1/4 Inch IPS (0.540 Inch OD x 0.065 Inch WT)
Material: Copper (Existing) / Cu-Ni 90-10 (New)
Specification: MIL-T-24107 / MIL-T-16420
Gage No.: G130
Remarks: See 2.7, 2.8, and 2.29 for detail

1.3.25.1 Quantity (One EA), Deck Sleeve

Size: 1/4 Inch IPS
Material: Carbon Steel
Specification: ASTM A106 GR-B / 803-1385866

1.3.26 Quantity (3 FT), Main Condenser 1B Condensate Pump Discharge Gage Piping including Deck Sleeve

Size: 1/4 Inch IPS (0.540 Inch OD x 0.065 Inch WT)
Material: Copper (Existing) / Cu-Ni 90-10 (New)
Specification: MIL-T-24107 / MIL-T-16420
Gage No.: G130
Remarks: See 2.7, 2.8, and 2.29 for detail

1.3.26.1 Quantity (One EA), Deck Sleeve

Size: 1/4 Inch IPS
Material: Carbon Steel
Specification: ASTM A106 GR-B / 803-1385866

1.3.27 Quantity (3 FT), Control Air Gage Piping including Deck Sleeve

Size: 1/4 Inch IPS (0.540 Inch OD x 0.065 Inch WT)
Material: Copper (Existing) / Cu-Ni 90-10 (New)
Specification: MIL-T-24107 / MIL-T-16420
Gage No.: G294
Remarks: See 2.7, 2.8, and 2.30 for detail

1.3.27.1 Quantity (One EA), Deck Sleeve

Size: 1/4 Inch IPS
Material: Carbon Steel
Specification: ASTM A106 GR-B / 803-1385866

1.3.28 Quantity (3 FT), Aux Machinery Seawater Cooling Supply Gage Piping including Deck Sleeve

Size: 1/4 Inch IPS (0.540 Inch OD x 0.065 Inch WT)
Material: Cu-Ni 70-30
Specification: MIL-T-16420
Gage No.: G177
Remarks: See 2.7, 2.8, and 2.31 for detail

1.3.28.1 Quantity (One EA), Deck Sleeve

Size: 1/4 Inch IPS
Material: Carbon Steel
Specification: ASTM A106 GR-B / 803-1385866

1.3.29 Quantity (3 FT), Firemain Forward Gage Piping including Deck Sleeve

Size: 1/4 Inch IPS (0.540 Inch OD x 0.065 Inch WT)
Material: Cu-Ni 70-30
Specification: MIL-T-16420
Gage No.: G208
Remarks: See 2.7, 2.8, and 2.32 for detail

1.3.29.1 Quantity (One EA), Deck Sleeve

Size: 1/4 Inch IPS
Material: Carbon Steel
Specification: ASTM A106 GR-B / 803-1385866

1.3.30 Quantity (3 FT), Firemain After Gage Piping including Deck Sleeve

Size: 1/4 Inch IPS (0.540 Inch OD x 0.065 Inch WT)
Material: Cu-Ni 70-30
Specification: MIL-T-16420
Gage No.: G209
Remarks: See 2.7, 2.8, and 2.32 for detail

1.3.30.1 Quantity (One EA), Deck Sleeve

Size: 1/4 Inch IPS
Material: Carbon Steel
Specification: ASTM A106 GR-B / 803-1385866

1.3.31 Quantity (One EA), Stuffing Box Assembly for High Pressure (HP) Turbine First Stage Steam Thermometer

Thermometer Dial Size: 8-1/2 Inch
Thermometer Specification: MIL-T-19646
Thermometer Range: 400 - 1,200 Degrees Fahrenheit (F°)
Thermometer No.: T25
Material: CRES
Remarks: See 2.33 for detail

1.3.32 Quantity (One EA), Stuffing Box Assembly for HP Turbine Exhaust Steam Thermometer

Thermometer Dial Size: 4-1/2 Inch
Thermometer Specification: MIL-T-19646
Thermometer Range: 100 - 800 F°
Thermometer No.: T26
Material: CRES
Remarks: See 2.33 for detail

1.3.33 Quantity (One EA), Stuffing Box Assembly for Main Condenser Air Ejector Inlet Thermometer

Thermometer Dial Size: 4-1/2 Inch
Thermometer Specification: MIL-T-19646
Thermometer Range: 20 - 240 F°
Thermometer No.: T38
Material: CRES
Remarks: See 2.33 for detail

1.3.34 Quantity (One EA), Stuffing Box Assembly for Main Condenser Air Ejector Outlet Thermometer

Thermometer Dial Size: 4-1/2 Inch
Thermometer Specification: MIL-T-19646
Thermometer Range: 20 - 240 F°
Thermometer No.: T39
Material: CRES
Remarks: See 2.33 for detail

1.3.35 Quantity (60SF), Compartment Insulation on Inboard, Outboard, Forward, and Aft Bulkhead in 6-86-0-E, up to height of 15 inches from deck plating [Existing]

Material: Acoustic, Perforated, Fiber Glass, 2 Inches Thickness, MIL-DTL-32585, Type II, Form One, Facing C

1.3.36 Quantity (One Lot), Insulation Coaming in 6-86-0-E, Frames between 86 and 89, Port and Starboard (Stbd)

Material: Steel
Remarks: See 2.38 for detail

1.3.37 Quantity (One Lot), Structural Member in 6-86-0-E and 8-86-0-E

1.3.37.1 Quantity (One Lot), Bulkhead Plate in 6-86-0-E, Frames between 86 and 89, Port and Stbd

Material: OS, MIL-S-22698 GR-A, 7.65 LBs Plate
Remarks: See 2.39 for material and detail

1.3.37.2 Quantity (One Lot), Deck Plate in 6-86-0-E, Frames between 86 and 89, Port and Stbd

Material: OS, MIL-S-22698 GR-A, 10.2 LBs Plate
Remarks: See 2.39 for detail

1.3.37.3 Quantity (One Lot), Vertical Stiffener on Bulkhead Plating in 8-86-0-E, Frames between 86 and 89, Port and Stbd

Material: OS, MIL-S-22698 GR-A, 5 Inches x 4 Inches x 5.75 LBs T
Remarks: See 2.39 for detail

1.3.37.4 Quantity (15 EA), Sole Plate on Vertical Stiffener on Bulkhead Plating in 8-86-0-E, Frames between 86 and 89, Port and Stbd

Material: OS, MIL-S-22698 GR-A, 10.2 LBs Plate
Remarks: See Sheet 6 Detail 6-B of 2.39 and Sheet 15A Detail 15A-F of 2.40 for detail

1.3.38 Quantity (One EA), Leg of Control Console Assembly in 6-86-0-E

Material: OS, MIL-S-22698 GR-A, 2 Inches x 2 Inches x 3/16 Inch Thickness, Angle
Butt Joint Design: B2S.1 of MIL-STD-22
Remarks: See Sheet 3 Elevation of 2.41 for detail and Sketch Enclosure-01 for location detail

1.3.39 Quantity (One EA), Sole Plate on Leg of Control Console Assembly in 6-86-0-E

Material: OS, MIL-S-22698 GR-A, 7.65 LBs Plate
Remarks: See Sheet 3 Elevation and Section 3-C of 2.41 for detail and Sketch Enclosure-01 for location detail

1.3.40 Quantity (38 SF), Compartment Insulation on Inboard, Outboard, Forward, and Aft Bulkhead in 6-86-0-E, up to height of 9 inches from 6 inches above from deck plating

Material: Acoustic, Perforated, Fiber Glass, 2 Inches Thickness, MIL-DTL-32585, Type II, Form One, Facing C
Remarks: See 2.37 and Note 4 of 2.38 for detail

1.4 Security Classification: None.

1.5 Initial Condition:

1.5.1 Potential Asbestos Hazard.

1.5.2 Potential Lead Hazard.

1.5.3 DFS No.: LCC-19-1001-2025.

1.6 Contractor work start date: 7/21/2026

1.7 Contractor work completion date: 11/21/2027

2. **REFERENCES:**

REF. NO.	DOCUMENT /DRAWING NUMBER	DOCUMENT/DRAWING TITLE	REV	CHG NO.	COPY REQ'D (Y/N)	SOURCE DOC (Y/N)	PARA	SEC	PG	CHP
1	NSI FY-26	NAVSEA Standard Items	-	1	N					
2	LI FY-26	Local Standard Items	-	ORG	N					
3	DWG 301-8283431	60 HZ System Control MODS Electrical Installation	-		Y				2,9,26	
4	PDD 300-ELM-250241	INSTL OF CBL PEN ON DECK IN ENG RM ENCL OPER STA 6-86-0-E	-		Y				ALL	
5	DWG 514-8516910	SCD 10990 - AUX STM AND AUX EXH INSUL AND HANGER MODS FIRE ROOM & ENGINE ROOM	-		Y				4	
6	DWG 509-2492873	POTABLE WATER SYS-FIRE & ENG RMS-PLAN	G		Y				ALL	
7	PDD 206-ELM-250122	MISC GAGE PP IN ENCLOSED OPERATING STA, REPL OF	-		Y				ALL	
8	DWG 206-2492067	AGC19 GAGE PIPING E.R ARRGT & DETS	B		Y				ALL	
9	DWG 206-2492066	GAGE PIPING - F.R. ARRGT	C		Y				ALL	
10	DWG 845-2492606	LIST OF GAGES	C		N					
11	MIL MIL-STD-1627	Bending of Pipe or Tube for Ship Piping Systems	C		N					
12	DWG 207-8685198	MAIN STEAM SYSTEM DIAGRAM SELECTED RECORD DRAWING	-		Y				2,6	
13	DWG 207-2492074	MAIN STEAM PIPING - PLAN	E		Y				ALL	
14	DWG 207-2492076	Main Steam Piping - SECT	E		Y				ALL	
15	DWG 514-2492513	MN TURBINE DRAIN PIPING DIAGRAM	B		Y				ALL	
16	DWG 514-8685199	600 LB AUXILIARY STEAM SYSTEM DIAGRAM SELECTED RECORD DRAWING	-		Y				2,5	
17	DWG 998R0666	25" VERTICAL PROPELLER MAIN COND CIRCULATING PUMP OUTLINE (TURBINE DRIVE)	B		Y				ALL	
18	DWG 514-2492517	600LB H.P AUX STM-PLAN	D		Y				ALL	
19	DWG 514-8685208	GLAND SEAL & EXHAUST SYSTEM DIAGRAM	-		Y				2,4	
20	DWG 208-8685203	FEEDWATER SYSTEM DAIGRAM SELECTED RECORD DRAWING	-		Y				3,13	
21	DWG 208-2492086	Feed SUCT & DISCH & TRANS Piping -Plan	H		Y				ALL	
22	DWG 514-8685201	AUX EXH & ESC ST SYSTEM DIAGRAM SELECTED RECORD DRAWING	-		Y				2,3,8	
23	DWG 514-2492525	AGC19 AUX EXH TURB EXTRACTION & ATM ESC PIPING-PLAN	E		Y				ALL	
24	DWG 514-2492509	150 LB AUX Steam DIAG	D		Y				ALL	
25	DWG 514-2492521	150LB AUX Steam-Plan	F		Y				ALL	

REF. NO.	DOCUMENT /DRAWING NUMBER	DOCUMENT/DRAWING TITLE	REV	CHG NO.	COPY REQ'D (Y/N)	SOURCE DOC (Y/N)	PARA	SEC	PG	CHP
26	DWG 211-8685206	LUBE OIL SERVICE SYSTEM DIAGRAM SELECTED RECORD DRAWING	-		Y				3,10	
27	DWG 211-8506850	MAIN ENGINE LUBE OIL SYSTEM SLOP & ELOP REPLACEMENT ENGINE ROOM	C		Y				8	
28	TM S9086-HK-STM-010/CH-241	Propulsion Reduction Gears, Couplings, Clutches, and Associated Components	4		N					
29	DWG 208-8685205	CNDS VENTS AND DRAINS DIAG	-		Y				4,8	
30	DWG 513-8577728	LOW PRESSURE, HIGH PRESSURE, VITAL, DRY AND CONTROL AIR DIAGRAM	-		Y				19, 21	
31	DWG 209-2492112	AUX MACH SW COOLING SYS-MN & AUX COND CIRC SYS-DIAG	E		Y				ALL	
32	DWG 506-2492800	FIRE & FLUSHING SYS DIAG- 4TH & 5 TH DK	E		Y				ALL	
33	PDD 206-ELM-250242	STFG BOX ASSY OF CAPILLARY TUBING FOR TEMP GAGE, INSTL OF	-		Y				ALL	
34	DWG 845-2492607	LIST OF THERMOMETERS	D		N					
35	DWG 696E502	INSTRUMENTATION OUTLINE	D		N					
36	TM S9086-CJ-STM-010/CH-075	Fasteners	7		N					
37	DWG 804-5773931	Insulation for Compartments, Acoustic and Thermal Installation Details	A		N					
38	PDD 607-ELM-250207	REMOVAL PLAN OF INSULATION COAMING IN ENGRM ENCL OPN STA (6-86-0-E)	-		Y				ALL	
39	PDD 114-ELM-250208	RPR OF CORRODED BOTTOM PLTG IN ENG RM ENCL OPN STA (6-86-0-E)	-		Y				ALL	
40	DWG 114-2491176	STRUCTURAL DETAILS	AE		Y				15A	
41	DWG 245-2492147	MN. PROP. CONTROL CONSOLE ARR. DETS. & L/M	B		Y				3	
42	PDD 114-ELM-250081	TEMP RPR OF CRSN HOLES IN BOTTOM PLTG IN ENG RM ENCL OPER STA (6-86-0-E)	-		Y				ALL	

3. **APPENDICES:**

3.1 Appendix "J" TGI Job Summary Information Sheet
3.2 Appendix "M" TGI Material List
3.3 Appendix "D" Deficiency Form

4. **GENERAL REQUIREMENTS:**

4.1 Not Applicable.

5. **PROCEDURE:**

5.1 Pump out, clean and dry the bilge area located in 1.2.2 and 1.2.3 free from oil, debris, and other foreign matter.

5.2 Accomplish the requirements of disconnection and connection for each cable listed in 1.3.1, using Sheets 2, 9 and 26 of 2.3 for guidance.

5.2.1 Accomplish the requirements of 009-123 of 2.1 for fiber optic component of the system.

5.3 Remove existing and install new each stuffing tube listed in 1.3.2, MCT assembly listed in 1.3.3, and RMCP assembly listed in 1.3.4 in accordance with 2.4.

5.3.1 Fabricate each new MCT assembly listed in 1.3.3, and RMCP assembly listed in 1.3.4.

5.3.2 Accomplish the requirements of 009-012 of 2.1, including Table 2, Column(s) A, Lines One through 7.

5.3.3 Accomplish the requirements of 009-025 of 2.1 for a local air hose test of each new weld of each stuffing tube listed in 1.3.2, MCT assembly listed in 1.3.3 and RMCP assembly listed in 1.3.4. Allowable leakage: None.

5.4 Disconnect mechanically existing and reconnect each spring hanger assembly listed in 1.3.5 for supporting of structural work, using 2.5 for guidance.

5.5 Disconnect mechanically existing and reconnect each connection of potable water piping on water fountain listed in 1.3.6 for supporting of structural work, using 2.6 for guidance.

5.5.1 Accomplish the requirements of 009-087 of 2.1 for each potable water piping.

5.5.1.1 Accomplish the requirements of 009-009 of 2.1 for chlorination and bacteriological tests. Analysis and testing conducted by a qualified Japanese laboratory (accredited by ISO 17025 or equal) are authorized by the SUPERVISOR.

5.5.1.2 Record results of chlorination and bacteriological test on a Laboratory Analysis Record(s) and DD Form 686, and submit one legible copy, in hard copy or approved transferrable media, of completed record(s) and form(s) to the SUPERVISOR.

5.6 Remove existing, assemble, and install new each main steam system gage piping including deck sleeve listed in 1.3.7 and 1.3.8 in accordance with 2.7, using 2.8, 2.10, 2.12 through 2.14, and Enclosure-02 for guidance.

5.6.1 Bend each new pipe in accordance with 2.11.

5.6.2 Accomplish the requirements of 009-012 of 2.1, including Table One, Column(s) A, Lines One through 10.

5.6.2.1 Accomplish nondestructive testing in accordance with Lines 13, including liquid penetrant testing accomplished to satisfy operational pressure test option.

5.6.2.2 Accomplish the requirements of 009-009 of 2.1.

5.6.2.3 Accomplish the requirements of 099-911YO of 2.2, using QA Form 20 Enclosure-03-1 through Enclosure-03-12. Each joint identification number must be in accordance with Sheet One and 2 of Mapping Plan Enclosure-02.

5.6.3 Accomplish the requirements of 009-071 of 2.1 for hydrostatic test, using feedwater at 986 PSIG, for each new and disturbed main steam gage piping systems.

5.6.3.1 Document shop hydrostatic test results on QA Form 28 Enclosure-04-1.

5.6.4 Accomplish following non-destructive testing (NDT) inspection, PJ-1 and PJ-1A of Mapping Plan Enclosure-02, for Class P-1 main steam system gage piping listed in 1.3.7 and 1.3.8.

5.6.4.1 Accomplish 5X visual test on root layer of each Class P-1 onboard weld joint in accordance with Notes 7.1 of 2.7. The accept or reject criteria must be in accordance with Notes 7.1 of 2.7.

(I)(G) “NDT INSPECTION”

5.6.4.2 Accomplish visual test and liquid penetrant test on final layer of each Class P-1 onboard weld joint in accordance with Notes 7.1 of 2.7. The accept or reject criteria must be in accordance with Notes 7.1 of 2.7.

(I)(G) “NDT INSPECTION”

5.6.5 Accomplish the requirements of 009-012 of 2.1, including Table 2, Column(s) A, Lines One through 7.

5.6.6 Accomplish the requirements of 009-025 of 2.1 for the local air hose test of each new weld of each watertight/airtight structural boundary. Allowable leakage: None.

5.7 Remove existing, assemble, and install new each main turbine drain system gage piping including deck sleeve listed in 1.3.9 through 1.3.11 in accordance with 2.7, using 2.8, 2.10, 2.12, 2.15 and Enclosure-02 for guidance.

5.7.1 Bend each new pipe in accordance with 2.11.

5.7.2 Accomplish the requirements of 009-012 of 2.1, including Table One, Column(s) A, Lines One through 10.

5.7.2.1 Accomplish nondestructive testing in accordance with Lines 13, including liquid penetrant testing accomplished to satisfy operational pressure test option.

5.7.2.2 Accomplish the requirements of 009-009 of 2.1.

5.7.2.3 Accomplish the requirements of 099-911YO of 2.2, using QA Form 20 Enclosure-03-13 through Enclosure-03-30. Each joint identification number must be in accordance with Sheet 3 through 5 of Mapping Plan Enclosure-02.

5.7.3 Accomplish the requirements of 009-071 of 2.1 for hydrostatic test, using feedwater at 986 PSIG, for each new and disturbed main turbine drain system gage piping listed in 1.3.9.

5.7.3.1 Document shop hydrostatic test results on QA Form 28 Enclosure-04-2.

5.7.4 Accomplish the requirements of 009-071 of 2.1 for hydrostatic test, using feedwater at 562 PSIG, for each new and disturbed main turbine drain system gage piping listed in 1.3.10.

5.7.4.1 Document shop hydrostatic test results on QA Form 28 Enclosure-04-3.

5.7.5 Accomplish the requirements of 009-071 of 2.1 for hydrostatic test, using feedwater at 81 PSIG, for each new and disturbed main turbine drain system gage piping listed in 1.3.11.

5.7.5.1 Document shop hydrostatic test results on QA Form 28 Enclosure-04-4.

5.7.6 Accomplish following non-destructive testing (NDT) inspection, PJ-1B and PJ-1C of Mapping Plan Enclosure-02, for Class P-1 main turbine drain system gage piping listed in 1.3.9 and 1.3.10.

5.7.6.1 Accomplish 5X visual test on root layer of each Class P-1 onboard weld joint in accordance with Notes 7.1 of 2.7. The accept or reject criteria must be in accordance with Notes 7.1 of 2.7.

(I)(G) “NDT INSPECTION”

5.7.6.2 Accomplish visual test and liquid penetrant test on final layer of each Class P-1 onboard weld joint in accordance with Notes 7.1 of 2.7. The accept or reject criteria must be in accordance with Notes 7.1 of 2.7.

(I)(G) “NDT INSPECTION”

5.7.7 Accomplish the requirements of 009-012 of 2.1, including Table 2, Column(s) A, Lines One through 7.

5.7.8 Accomplish the requirements of 009-025 of 2.1 for the local air hose test of each new weld of each watertight/airtight structural boundary. Allowable leakage: None.

5.8 Remove existing, assemble, and install new each 600 psi aux steam system gage piping including deck sleeve listed in 1.3.12 and 1.3.13 in accordance with 2.7, using 2.8, 2.10, 2.16 through 2.18, and Enclosure-02 for guidance.

5.8.1 Bend each new pipe in accordance with 2.11.

5.8.2 Accomplish the requirements of 009-012 of 2.1, including Table One, Column(s) A, Lines One through 10.

5.8.2.1 Accomplish nondestructive testing in accordance with Lines 13, including liquid penetrant testing accomplished to satisfy operational pressure test option.

5.8.2.2 Accomplish the requirements of 009-009 of 2.1.

5.8.2.3 Accomplish the requirements of 099-911YO of 2.2, using QA Form 20 Enclosure-03-31 through Enclosure-03-42. Each joint identification number must be in accordance with Sheet 6 and 7 of Mapping Plan Enclosure-02.

5.8.3 Accomplish the requirements of 009-071 of 2.1 for hydrostatic test, using feedwater at 986 PSIG, for each new and disturbed 600 psi aux steam gage piping systems.

5.8.3.1 Document shop hydrostatic test results on QA Form 28 Enclosure-04-5.

5.8.4 Accomplish the requirements of 009-012 of 2.1, including Table 2, Column(s) A, Lines One through 7.

5.8.5 Accomplish the requirements of 009-025 of 2.1 for the local air hose test of each new weld of each watertight/airtight structural boundary. Allowable leakage: None.

5.9 Remove existing, assemble, and install new each main turbine gland seal steam gage piping including deck sleeve listed in 1.3.14 in accordance with 2.7, using 2.8, 2.10, 2.19, and Enclosure-02 for guidance.

5.9.1 Bend each new pipe in accordance with 2.11.

5.9.2 Accomplish the requirements of 009-012 of 2.1, including Table One, Column(s) A, Lines One through 10.

5.9.2.1 Accomplish nondestructive testing in accordance with Lines 13, including liquid penetrant testing accomplished to satisfy operational pressure test option.

5.9.2.2 Accomplish the requirements of 009-009 of 2.1.

5.9.2.3 Accomplish the requirements of 099-911YO of 2.2, using QA Form 20 Enclosure-03-43 through Enclosure-03-48. Each joint identification number must be in accordance with Sheet 8 of Mapping Plan Enclosure-02.

5.9.3 Accomplish the requirements of 009-071 of 2.1 for hydrostatic test, using feedwater at 50 PSIG, for each new and disturbed main turbine gland seal steam gage piping systems.

5.9.3.1 Document shop hydrostatic test results on QA Form 28 Enclosure-04-6.

5.9.4 Accomplish following non-destructive testing (NDT) inspection, PJ-1G of Mapping Plan Enclosure-02, for Class P-1 main turbine gland seal steam gage piping listed in 1.3.14.

5.9.4.1 Accomplish 5X visual test on root layer of each Class P-1 onboard weld joint in accordance with Notes 7.1 of 2.7. The accept or reject criteria must be in accordance with Notes 7.1 of 2.7.

(I)(G) “NDT INSPECTION”

5.9.4.2 Accomplish visual test and liquid penetrant test on final layer of each Class P-1 onboard weld joint in accordance with Notes 7.1 of 2.7. The accept or reject criteria must be in accordance with Notes 7.1 of 2.7.

(I)(G) “NDT INSPECTION”

5.9.5 Accomplish the requirements of 009-012 of 2.1, including Table 2, Column(s) A, Lines One through 7.

5.9.6 Accomplish the requirements of 009-025 of 2.1 for the local air hose test of each new weld of each watertight/airtight structural boundary. Allowable leakage: None.

5.10 Remove existing, assemble, and install new each main feedwater system gage piping including deck sleeve listed in 1.3.15 and 1.3.16 in accordance with 2.7, using 2.8, 2.9, 2.10, 2.20, 2.21, and Enclosure-02 for guidance.

5.10.1 Bend each new pipe in accordance with 2.11.

5.10.2 Accomplish the requirements of 009-012 of 2.1, including Table One, Column(s) A, Lines One through 10.

5.10.2.1 Accomplish nondestructive testing in accordance with Lines 13, including liquid penetrant testing accomplished to satisfy operational pressure test option.

5.10.2.2 Accomplish the requirements of 009-009 of 2.1.

5.10.2.3 Accomplish the requirements of 099-911YO of 2.2, using QA Form 20 Enclosure-03-49 through Enclosure-03-60. Each joint identification number must be in accordance with Sheet 9 and 10 of Mapping Plan Enclosure-02.

5.10.3 Accomplish the requirements of 009-071 of 2.1 for hydrostatic test, using feedwater at 1,560 PSIG, for each new and disturbed main feedwater gage piping systems.

5.10.3.1 Document shop hydrostatic test results on QA Form 28 Enclosure-04-7.

5.10.4 Accomplish the requirements of 009-012 of 2.1, including Table 2, Column(s) A, Lines One through 7.

5.10.5 Accomplish the requirements of 009-025 of 2.1 for the local air hose test of each new weld of each watertight/airtight structural boundary. Allowable leakage: None.

5.11 Remove existing, assemble, and install new each aux exhaust steam system gage piping including deck sleeve listed in 1.3.17 through 1.3.19 in accordance with 2.7, using 2.8, 2.10, 2.15, 2.22, and 2.23 for guidance.

5.11.1 Bend each new pipe in accordance with 2.11.

5.11.2 Accomplish the requirements of 009-012 of 2.1, including Table One, Column(s) A, Lines One through 10.

5.11.2.1 Accomplish nondestructive testing in accordance with Lines 13 for liquid penetrant testing accomplished to satisfy operational pressure test option.

5.11.3 Accomplish the requirements of 009-071 of 2.1 for hydrostatic test, using feedwater at 68 PSIG, for each new and disturbed aux exhaust steam system gage piping listed in 1.3.17 and 1.3.18.

5.11.3.1 Document shop hydrostatic test results on QA Form 28 Enclosure-04-8.

5.11.4 Accomplish the requirements of 009-071 of 2.1 for hydrostatic test, using feedwater at 81 PSIG, for each new and disturbed aux exhaust steam system gage piping listed in 1.3.19.

5.11.4.1 Document shop hydrostatic test results on QA Form 28 Enclosure-04-9.

5.11.5 Accomplish the requirements of 009-012 of 2.1, including Table 2, Column(s) A, Lines One through 7.

5.11.6 Accomplish the requirements of 009-025 of 2.1 for the local air hose test of each new weld of each watertight/airtight structural boundary. Allowable leakage: None.

5.12 Remove existing, assemble, and install new each 150 psi aux steam gage piping including deck sleeve listed in 1.3.20 in accordance with 2.7, using 2.8, 2.10, 2.24, and 2.25 for guidance.

5.12.1 Bend each new pipe in accordance with 2.11.

5.12.2 Accomplish the requirements of 009-012 of 2.1, including Table One, Column(s) A, Lines One through 10.

5.12.2.1 Accomplish nondestructive testing in accordance with Lines 13 for liquid penetrant testing accomplished to satisfy operational pressure test option.

5.12.3 Accomplish the requirements of 009-071 of 2.1 for hydrostatic test, using feedwater at 237 PSIG, for each new and disturbed 150 psi aux steam gage piping systems.

5.12.3.1 Document shop hydrostatic test results on QA Form 28 Enclosure-04-10.

5.12.4 Accomplish the requirements of 009-012 of 2.1, including Table 2, Column(s) A, Lines One through 7.

5.12.5 Accomplish the requirements of 009-025 of 2.1 for the local air hose test of each new weld of each watertight/airtight structural boundary. Allowable leakage: None.

5.13 Remove existing, assemble, and install new each main circulating pump lube oil gage piping including deck sleeve listed in 1.3.21 in accordance with 2.7, using 2.8, 2.10, and 2.17 for guidance.

5.13.1 Bend each new pipe in accordance with 2.11.

5.13.2 Accomplish the requirements of 009-012 of 2.1, including Table One, Column(s) A, Lines One through 10.

5.13.3 Accomplish the requirements of 009-071 of 2.1 for hydrostatic test, using clean, fresh water at 68 PSIG, for each new and disturbed main circulating pump lube oil gage piping systems.

5.13.3.1 Document shop hydrostatic test results on QA Form 28 Enclosure-04-11.

5.13.4 Accomplish the requirements of 009-012 of 2.1, including Table 2, Column(s) A, Lines One through 7.

5.13.5 Accomplish the requirements of 009-025 of 2.1 for the local air hose test of each new weld of each watertight/airtight structural boundary. Allowable leakage: None.

5.14 Remove existing, assemble, and install new each lube oil system gage piping including deck sleeve listed in 1.3.22 and 1.3.23 in accordance with 2.7, using 2.8, 2.10, 2.26 through 2.28 for guidance.

5.14.1 Accomplish the requirements of 009-057 of 2.1 for protection of the reduction gear.

5.14.2 Accomplish the requirements of 099-906YO of 2.2.

5.14.2.1 Accomplish the requirements of 009-009 of 2.1.

5.14.3 Bend each new pipe in accordance with 2.11.

5.14.4 Accomplish the requirements of 009-012 of 2.1, including Table One, Column(s) A, Lines One through 10.

5.14.5 Accomplish the requirements of 009-071 of 2.1 for hydrostatic test, using clean, fresh water at 88 PSIG, for each new and disturbed lube oil gage piping systems.

5.14.5.1 Document shop hydrostatic test results on QA Form 28 Enclosure-04-12.

5.14.6 Accomplish the requirements of 009-012 of 2.1, including Table 2, Column(s) A, Lines One through 7.

5.14.7 Accomplish the requirements of 009-025 of 2.1 for the local air hose test of each new weld of each watertight/airtight structural boundary. Allowable leakage: None.

5.15 Remove existing, assemble, and install new each condensate system gage piping including deck sleeve listed in 1.3.24 through 1.3.26 in accordance with 2.7, using 2.8, 2.10, and 2.29 for guidance.

5.15.1 Bend each new pipe in accordance with 2.11.

5.15.2 Accomplish the requirements of 009-012 of 2.1, including Table One, Column(s) A, Lines One through 10.

5.15.3 Accomplish the requirements of 009-071 of 2.1 for hydrostatic test, using clean, fresh water at 68 PSIG, for each new and disturbed condensate system gage piping listed in 1.3.24.

5.15.3.1 Document shop hydrostatic test results on QA Form 28 Enclosure-04-13.

5.15.4 Accomplish the requirements of 009-071 of 2.1 for hydrostatic test, using feedwater at 117 PSIG, for each new and disturbed condensate system gage piping listed in 1.3.25 and 1.3.26.

5.15.4.1 Document shop hydrostatic test results on QA Form 28 Enclosure-04-14.

5.15.5 Accomplish the requirements of 009-012 of 2.1, including Table 2, Column(s) A, Lines One through 7.

5.15.6 Accomplish the requirements of 009-025 of 2.1 for the local air hose test of each new weld of each watertight/airtight structural boundary. Allowable leakage: None.

5.16 Remove existing, assemble, and install new each control air gage piping including deck sleeve listed in 1.3.27 in accordance with 2.7, using 2.8, 2.10, and 2.30 for guidance.

5.16.1 Bend each new pipe in accordance with 2.11.

5.16.2 Accomplish the requirements of 009-012 of 2.1, including Table One, Column(s) A, Lines One through 10.

5.16.3 Accomplish the requirements of 009-071 of 2.1 for hydrostatic test, using clean, fresh water at 203 PSIG, for each new and disturbed control air gage piping systems.

5.16.3.1 Document shop hydrostatic test results on QA Form 28 Enclosure-04-15.

5.16.4 Accomplish the requirements of 009-012 of 2.1, including Table 2, Column(s) A, Lines One through 7.

5.16.5 Accomplish the requirements of 009-025 of 2.1 for the local air hose test of each new weld of each watertight/airtight structural boundary. Allowable leakage: None.

5.17 Remove existing, assemble, and install new each aux seawater cooling gage piping including deck sleeve listed in 1.3.28 in accordance with 2.7, using 2.8, 2.10, and 2.31 for guidance.

5.17.1 Bend each new pipe in accordance with 2.11.

5.17.2 Accomplish the requirements of 009-012 of 2.1, including Table One, Column(s) A, Lines One through 10.

5.17.3 Accomplish the requirements of 009-071 of 2.1 for hydrostatic test, using clean, fresh water at 68 PSIG, for each new and disturbed aux seawater cooling gage piping systems.

5.17.3.1 Document shop hydrostatic test results on QA Form 28 Enclosure-04-16.

5.17.4 Accomplish the requirements of 009-012 of 2.1, including Table 2, Column(s) A, Lines One through 7.

5.17.5 Accomplish the requirements of 009-025 of 2.1 for the local air hose test of each new weld of each watertight/airtight structural boundary. Allowable leakage: None.

5.18 Remove existing, assemble, and install new each firemain system gage piping including deck sleeve listed in 1.3.29 and 1.3.30 in accordance with 2.7, using 2.8, 2.10, and 2.32 for guidance.

5.18.1 Bend each new pipe in accordance with 2.11.

5.18.2 Accomplish the requirements of 009-012 of 2.1, including Table One, Column(s) A, Lines One through 10.

5.18.3 Accomplish the requirements of 009-071 of 2.1 for hydrostatic test, using clean, fresh water at 243 PSIG, for each new and disturbed firemain gage piping systems.

5.18.3.1 Document shop hydrostatic test results on QA Form 28 Enclosure-04-17.

5.18.4 Accomplish the requirements of 009-012 of 2.1, including Table 2, Column(s) A, Lines One through 7.

5.18.5 Accomplish the requirements of 009-025 of 2.1 for the local air hose test of each new weld of each watertight/airtight structural boundary. Allowable leakage: None.

5.19 Fabricate, and install new each stuffing box assembly listed in 1.3.31 through 1.3.34 in accordance with 2.33, using 2.34 and 2.35 for guidance.

5.19.1 Measure and dimension check each thread area of each new part of stuffing box assembly in accordance with Paragraph 075-2.3.2.5.3 of 2.36, and System 21 gage of ASME B1.3-2007.

5.19.2 Accomplish visual inspection for the thread area of each new part of stuffing box assembly in accordance with ASTM F812.

(V) “VISUAL INSPECTION”

Sign: _____ Print: _____ Date: _____

5.19.3 Accomplish the requirements of 009-012 of 2.1, including Table 2, Column(s) D, Lines One through 7.

5.19.4 Accomplish the requirements of 009-025 of 2.1 for the local air hose test of each new stuffing box on each watertight/airtight structural boundary. Allowable leakage: None.

5.20 Remove each existing compartment insulation listed in 1.3.35 in accordance with 2.37, using 2.38 for guidance.

5.21 Remove each existing insulation coaming listed in 1.3.36 in accordance with 2.38.

5.22 Remove existing, fabricate and install new each structural member, leg, and sole plate listed in 1.3.37 through 1.3.39 in accordance with 2.39 through 2.41.

5.22.1 Remove existing temporary doubler plate, using 2.42 for guidance.

5.22.2 Accomplish the requirements of 009-012 of 2.1, including Table 2, Column(s) A, Lines One through 7.

5.22.3 Accomplish the requirements of 009-025 of 2.1 for a local air hose test of each new weld of each bulkhead plate and deck plate listed in 1.3.37.1 and 1.3.37.2. Allowable leakage: None.

5.23 Accomplish the requirements of 009-011 of 2.1 to install each new compartment insulation listed in 1.3.40 in accordance with 2.37 and 2.38.

5.23.1 Accomplish the requirements of 009-032 of 2.1 for top surface where new insulation is installed.

5.24 Accomplish the requirements of 009-032 of 2.1 for each new and disturbed surface.

5.25 Notes:

5.25.1 Planner: Code 231B T. Ando, 243-4372
Planner: Code 232 K. Suzuki, 243-2490
Planner: Code 233.1 K. Uchimura, 080-9350-1432
Planner: Code 233.2 H. Kosaka, 080-9350-1454
Planner: Code 234 S. Ito, 243-4297
Planner: Code 234 T. Tsunoi, 243-4204
Engineer: Code 250 K. Matsunari, 243-5816
Engineer: Code 260 T. Uno, 243-5085
Engineer: Code 260 R. Suzuki, 243-4587
Engineer: Code 270 R. Oohashi, 243-4353

5.25.2 Work Integration Manager (WIM): Code 333 T. Yaginuma, 080-5419-0598

5.25.3 This TGI clears DFS LCC-19-1071-2024 in its entirety.

5.25.4 Opening, initial cleaning, and closing of each space listed in 1.2.4 will be covered by TGI No. 3819P12319A01 (KTR TGI).

5.25.5 Calibration of spring hanger assembly will be covered by TGI No. 3819P123AGC01 (SRF-JRMC TGI).

5.25.6 Work per this instruction involves cutting an access (or removal of a door) through a fire zone bulkhead, through the hull of the ship above the turn of the bilge, through ventilation components (ducting, plenums, etc.), or through any air-tight, fume-tight or watertight bulkheads normally used to control air flow in the event of a shipboard fire. A nonflammable closure is required in accordance with COMNAVSEASYSCOM MSG R 261400Z JUL 12. The closure, if not continuously in use, shall be staged near the access, readily visible and accessible, so that any emergency responder can install the closure to affect proper air flow onboard the ship.

5.25.7 Provision of oily/chemical water barge will be coordinated by Project Team.

5.25.8 JCN EM01-L261 is related to this TGI.

5.26 Government Furnished Material (GFM):

5.26.1 SRF-JRMC will provide GFM listed in Appendix “M”.

5.26.2 SRF-JRMC will provide the following material when requested by Contractor via SRF-JRMC WIM, Code 333.

One LB of Welding Rod (ER80S-B2L) (This Level-1 material will be provided for non-level use)

5.27 SRF-JRMC will provide the following service work: (TGI No. 3819P123AGS02).

5.27.1 [C740] Crane and crane rigging service.

5.27.2 [X99E] Utility service, electrical.

5.27.3 [X99M] Utilities service, including low pressure air supply, water supply, and steam supply.

5.27.4 [C106.1] Safety inspection for SRF-JRMC employees.

5.27.5 [C106.2] Gas free inspection for SRF-JRMC employees.

5.27.6 [C133] QA inspection for (G) symbol(s), and prepare for material providing.

5.27.7 [C135] QA inspection for (G) symbol(s).

5.27.8 [X26W] Material procurement service for 5.26.2.

APPENDIX "J"
TGI JOB SUMMARY INFORMATION SHEET

SYSTEM:	PLANT NO.:	COMPONENT NAME:	TYPE:	PHASE:	REPEAT:	CU PH VERSION:	CASREP CAT:
		STRUCT 6-86-0-E	AY	A	0	1	

CU PHASE TITLE:
F/O - REPAIR STRUCTURAL MEMBER IN 6-86-0-E

PRIMARY COMPONENT:

COMPONENT UNIT LIST (FOR ASSEMBLIES):
CMPT 6-86-0-E MS9-87-2-W TK CMPT 8-86-0-E MSMN STM 8-86-0-E PP GLD SL 8-86-0-E PP 1MN COND CIRC PUMP PU SW 8-86-0-E PP MAIN CONDENSER CN MN TURB DRN 8-86-0-E PP AUX STM PP 8-86-0-E PP FM 8-86-0-E PP LP AIR 8-86-0-E PP AUX EXH 8-86-0-E HG MN FEED 8-86-0-E PP LO 8-86-0-E PP AUX EXH 8-86-0-E PP CNDS 8-86-0-E PP POTW 6-86-0-E PPCMPT 8-86-0-E WW CMPT 6-86-0-E WW K-EMPCS-FO-NTWK-A(1) C- K-EMPCS-FO-NTWK-A(4) C-

ATTACHMENT LIST:
1. ENCLOSURE-01 (3819P123AGA01-Sketch.pdf) saved on 05-APR-2025 0000.
2. ENCLOSURE-02 (3819P123AGA01-Map.pdf) saved on 05-APR-2025 0000.
3. ENCLOSURE-03 (3819P123AGA01-QA20.docx) saved on 05-APR-2025 0000.
4. ENCLOSURE-04 (3819P123AGA01-QA28.docx) saved on 17-APR-2025 0000.

ZONE MANAGER:	ZONE:	COMPARTMENT:	LEVEL:	FRAME:	SIDE:
YAGINUMA ,TAKEHIDE					

JO:	KO:	TOTAL MAN HRS:	TOTAL MAT'L COST	TOTAL DURATION:	PLANNING ACCEPTANCE:
3819P123AG	A01				

CU PHASE DESCRIPTION:
The purpose of this TGI is to repair structural member in 6-86-0-E.

Location of Work:
Engine Room Enclosed Operating Station (6-86-0-E)
Engine Room (8-86-0-E)
Fire Room (8-76-0-E)
Waste Water Bilge Sump (9-87-2-W)
N2B Cryptology Office (3-81-1-Q)

TASK NAME	SHOP	TSD/WC	TS	CREW#	MHRS	HIGH RAD HOURS	RC GRID#
5.1 SFTR HRs, LBR HRs	22	KE	PC				
5.2 ELEC HRs	22	KE	PC				
5.3 ELEC HRs, ELEX HRs, SFTR HRs, WELD HRs, PNTR HRs, QA HRs	22	KE	PC				
5.4 PFTR HRs, RGRS HRs	22	KE	PC				
5.5 PFTR HRs, QA HRs	22	KE	PC				
5.6 PFTR HRs, WELD HRs, PNTR HRs, RGRS HRs, QA HRs	22	KE	PC				
5.7 PFTR HRs, WELD HRs, RGRS HRs, PNTR HRs, QA HRs	22	KE	PC				
5.8 PFTR HRs, WELD HRs, PNTR HRs, RGRS HRs, QA HRs	22	KE	PC				
5.9 PFTR HRs, WELD HRs, PNTR HRs, RGRS HRs, QA HRs	22	KE	PC				

TASK NAME	SHOP	TSD/WC	TS	CREW#	MHRS	HIGH RAD HOURS	RC GRID#
5.10 PFTR HRs, WELD HRs, PNTR HRs, RGRS HRs, QA HRs	22	KE	PC				
5.11 PFTR HRs, WELD HRs, PNTR HRs, RGRS HRs, QA HRs	22	KE	PC				
5.12 PFTR HRs, WELD HRs, RGRS HRs, PNTR HRs, QA HRs	22	KE	PC				
5.13 PFTR HRs, WELD HRs, PNTR HRs, RGRS HRs, QA HRs	22	KE	PC				
5.14 PFTR HRs WELD HRs, PNTR HRs, RGRS HRs, QA HRs	22	KE	PC				
5.15 PFTR HRs, WELD HRs, PNTR HRs, RGRS HRs, QA HRs	22	KE	PC				
5.16 PFTR HRs, WELD HRs, PNTR HRs, RGRS HRs, QA HRs	22	KE	PC				
5.17 PFTR HRs, WELD HRs, PNTR HRs, RGRS HRs, QA HRs	22	KE	PC				
5.18 PFTR HRs, WELD HRs, PNTR HRs, RGRS HRs, QA HRS	22	KE	PC				
5.19 PFTR HRs WELD HRs, IMCH HRs, PNTR HRs, RGRS HRs, QA HRS	22	KE	PC				
5.20 INSL HRs	22	KE	PC				
5.21 SFTR HRs, WELD HRs, PNTR HRs	22	KE	PC				
5.22 SFTR HRs, WELD HRs, SMTL HRs RGRS HRs, INSL HRs, CARP HRs, PNTR HRs, OMCH HRs, BLRM: HRs, ELEC HRs, PFTR HRs, IMCH HRs QA HRs	22	KE	PC				
5.23 INSL HRs, PNTR HRs QA HRs	22	KE	PC				
5.24 PNTR HRs, QA HRs	22	KE	PC				
Structure Work CFM for all paints, thinner, grits including disposal cost, asbestos sampler cost and analysis cost for compartment insulation, duct insulation, and deck covering, air compressor rental cost and fuel oil cost for air hose test, ---continue to below---	22	MQ	CS				
---continued to from above--- marine chemist, adhesive and pin for compartment insulation, lead analysis cost, firewatch cost, fasteners, and misc such as electrode, gases, temporary covering and closure material, and other consumable.	22	MQ	CS				
Machinery Work CFM for misc such as fastener, plastic sheets/ bags, paint and other consumable.	22	MQ	CS				
Electrical Work CFM for air compressor rental cost, fuel oil cost, asbestos sample and analysis cost, banding material, fasteners, insulation tape, plastic bags, rope, and other consumable.	22	MQ	CS				
Electronics Work CFM for cable banding, blanking material including misc material.	22	MQ	CS				
Piping Work CFM for fire watches cost, tank watches cost, disinfection/bacteriological analysis cost, lead sampling/analysis cost, air compressor rental cost and fuel oil cost, NDT inspection cost, paints, pipe hanger ---continue to below---	22	MQ	CS				
---continued to from above--- fastener/liner cost, misc such as plastic bag/sheet, covering and closure material, tapes, welding/brazing rods, electrodes, gases, blade saw, grinding disc, and other consumable.	22	MQ	CS				
Boiler and lagging Work CFM for asbestos sampler and analysis cost, covering material, wire, fasteners, tyvek suit, painting material and other consumable material (MISC).	22	MQ	CS				
Process Funding Document.	10	CT	OM				
Version-1: revise QA Form 28 Enclosure-04-13 and Enclosure 04-14. C231B R. Takagi, 4/17/2025, -/-/N		V-01					

APPENDIX "M"
TGI MATERIAL LIST

SYSTEM:	PLANT NO.:	COMPONENT NAME:	TYPE:	PHASE:	REPEAT:	CU PH VERSION:	CASREP CAT:
		STRUCT 6-86-0-E	AY	A	0	1	

CU PHASE TITLE:
F/O - REPAIR STRUCTURAL MEMBER IN 6-86-0-E

MATERIAL REFERENCES

REF NO.	DOCUMENT/DRAWING NUMBER	DOCUMENT/DRAWING TITLE	REV
1	300-ELM-250241		
2	ELM-250122		
3	ELM-250242		

JOB ORDER:	KEY OP:
3819P123AG	A01

MATERIAL LIST

ITEM NO.	PC NO.	REF NO.	M / C	DESCRIPTION	STOCK NUMBER	GENERIC MATL TYPE	LVL	QA	HAZ MAT	DOC NO.	QTY REQD/ UNIT	QTY USED/ UNIT
001			M	PLATE,ME, ORIG: C231B, T. ANDO 243-4372 ORDERED FOR KTR QTY: 50SF 5 FT X 10 FT X 1 PM	9B 9515 002375333		NA	4	N	50865129	50/SF	
002			M	PLATE,ME, ORIG: C231B, T. ANDO 243-4372 ORDERED FOR KTR QTY: 300 SF 5 FT X 20 FT X 3 PM	9B 9515 001533184		NA	4	N	50865130	300/SF	

NOTES:

MATERIAL LIST

ITEM NO.	PC NO.	REF NO.	M / C	DESCRIPTION	STOCK NUMBER	GENERIC MATL TYPE	LVL	QA	HAZ MAT	DOC NO.	QTY REQD/ UNIT	QTY USED/ UNIT
003			M	BEAM, T-SHAPE, BEAM, T-SHAPE, SIZE: 5" X 4" X 5.75#, MATL: STEEL MILS22698 GR-A, ASTM A36, ORIG: C231B, T. ANDO 243-4372 ORDERED FOR KTR QTY: 20 LF 2 EA X 10FT CONTINUES LENGTH	LL9303598		NA	4	N		20/FT	
004			M	ANGLE,STRUCTURAL, ORIG: C231B, T. ANDO 243-4372 ORDERED FOR KTR	9B 9520 002774912		NA	4	N	50865172	10/FT	
005			M	MATTING,FLOOR, ORIG: C231B, T. ANDO 243-4372 ORDERED FOR KTR	9Q 7220 010249040		NA	4	N	50865132	1/RO	
006			M	INSULATI, ORIG: C231B, T. ANDO 243-4372 ORDERED FOR KTR	9Q 5640 008096312		NA	4	N	50865123	30/EA	
007			M	INSULATI, ORIG: C231B, T. ANDO 243-4372 ORDERED FOR KTR	9Q 5640 008096315		NA	4	N	50865111	50/EA	
008			M	SOUND CO, ORIG: C231B, T. ANDO 243-4372 ORDERED FOR KTR	9Q 5640 007565866		NA	4	N	50865124	15/SH	
009			M	TAPE,TEX, ORIG: C231B, T. ANDO 243-4372 ORDERED FOR KTR	9B 8315 002671632		NA	4	N	50865113	2/RO	
010			M	TAPE,TEX, ORIG: C231B, T. ANDO 243-4372 ORDERED FOR KTR	9B 8315 002671633		NA	4	N	50865125	2/RO	
011			M	TAPE,TEX, ORIG: C231B, T. ANDO 243-4372 ORDERED FOR KTR	9B 8315 002671630		NA	4	N	50865090	2/RO	
012			M	ADHESIVE, ORIG: C231B, T. ANDO 243-4372 ORDERED FOR KTR	9B 8040 002738708		NA	4	Y	50865077	2/GL	
013			M	ADHESIVE, ORIG: C231B, T. ANDO 243-4372 ORDERED FOR KTR	9B 8040 005508835		NA	4	Y	50865051	1/GL	
014			M	CAP,SNAP, ORIG: C231B, T. ANDO 243-4372 ORDERED FOR KTR	9B 5325 007377648		NA	4	N	50865126	400/EA	
200			M	GASKET SHEET, ORIG: C232 K. SUZUKI 243-2490 ORDERED FOR KTR GASKET SHEET, BRAND: GRAFOIL, GRADE GHR, 0.002"THK CRES 316, FLAT, ADHESIVELY BONDED TO EACH SIDE, SIZE: 39.4" X 39.4" X 0.062"THK, REMARKS: REQUIRED SPECIAL WOOD CRATE PACKAGING WITH CARDBOARD INSERTS TO PREVENT SHIPPING DAMAGE.	9B 5330 LL9308901		NA	4	N	51047441	4/SH	

MATERIAL LIST

ITEM NO.	PC NO.	REF NO.	M / C	DESCRIPTION	STOCK NUMBER	GENERIC MATL TYPE	LVL	QA	HAZ MAT	DOC NO.	QTY REQD/ UNIT	QTY USED/ UNIT
300	1	1	M	STUFFING TUBE, STL, , STUFFING TUBE. SWAGE. STEEL, SIZE B, 11"LG, COMPLETE WITH GLAND NUT AND GLAND RING, MIL-S-24235/18, RT&D# 0B1SC. ORDER FOR KTR ORIG: C226 K.YAMAMI, 080-9350-1447	9B 5975 LL9302508		NA	4	N	51047446	7/EA	
301	2	1	M	STUFFING TUBE, STUFFING TUBE, SWAGE, COMPLETE WITH GLAND NUT AND GLAND RING, SPEC: MIL-S-24235/18, SIZE D, LENGTH: 11", MATL: STEEL, ORDER FOR KTR ORIG: C226 K.YAMAMI, 080-9350-1447	9B 5975 LL4726371		NA	4	N	51047449	1/EA	
302	3	1	M	STUFFING TUBE, STL, , STUFFING TUBE ASSY, STEEL, FOR DECK, SIZE G, 11"LG. COMPLETE WITH GLAND NUT AND GLAND RING, RT&D# 0G1SC, MIL-S-24235/18, M24235/18-067. ORDER FOR KTR ORIG: C226 K.YAMAMI, 080-9350-1447	9B 5975 LL9004265		NA	4	N	51047445	1/EA	
303	4	1	M	FRAME, MALTI CABLE, FRAME, MALTI CABLE TRANSIT (MCT), FRAME SIZE: RGS-6X2, OVERALL SIZE: 271 MM W X 238 MM H X 60 MM D, MATL: STEEL, ORDER FOR KTR ORIG: C226 K.YAMAMI, 080-9350-1447			NA	4	N		1/EA	
304	5	1	M	FRAME, MALTI CABLE, FRAME, MALTI CABLE TRANSIT (MCT), FRAME SIZE: RGS-6, OVERALL SIZE: 140.5 MM W X 238 MM H X 60 MM D, MATL: STEEL, ORDER FOR KTR ORIG: C226 K.YAMAMI, 080-9350-1447	LL9100281		NA	4	N		5/EA	
305	6	1	M	FRAME, PROTECTOR, FRAME, PROTECTOR, MCT, 6"DIA X 3.2"DEPTH, MATL: LYCRON, STAINLESS STEEL, LYCRON FRAME WITH OPEN SIDES, PACKING AREA 3.54" X 3.54" ORDER FOR KTR ORIG: C226 K.YAMAMI, 080-9350-1447	LL6826688		NA	4	N		1/EA	
306	7	1	M	SHEET,METAL, ORDER FOR KTR ORIG: C226 K.YAMAMI, 080-9350-1447	9B 9515 002388617		NA	4	N	51015107	1/PM	
307	8	1	M	PLATE,METAL, ORDER FOR KTR ORIG: C226 K.YAMAMI, 080-9350-1447	9B 9515 002336263		NA	4	N	51015088	1/PM	

MATERIAL LIST

ITEM NO.	PC NO.	REF NO.	M / C	DESCRIPTION	STOCK NUMBER	GENERIC MATL TYPE	LVL	QA	HAZ MAT	DOC NO.	QTY REQD/ UNIT	QTY USED/ UNIT
308	9	1	M	PIPE,METALLIC, ORDER FOR KTR ORIG: C226 K.YAMAMI, 080-9350-1447	9B 4710 002778714		NA	4	N	51015151	1/FT	
309	10	1	M	HARDWARE KIT, ORDER FOR KTR ORIG: C226 K.YAMAMI, 080-9350-1447	9B 5340 016073284		NA	4	N	51015121	7/EA	
310	11	1	M	PROTECTOR,ELECTRICAL, ORDER FOR KTR ORIG: C226 K.YAMAMI, 080-9350-1447	9B 5975 010345537		NA	4	N	51015103	5/PR	
311	12	1	M	BLOCK,INSERT, INSERT BLOCK FOR MCT, SIZE: 20 MM X 20 MM X 60 MM LG, APPRICABLE CABLE DIA: 5.5 - 6.5 MM, MATL: LYCRON, DO NOT CROSS NSN: 5975-01034-5539(NO MANAGEMENT DATA) ORDER FOR KTR ORIG: C226 K.YAMAMI, 080-9350-1447	LL9311096		NA	4	N		5/EA	
312	13	1	M	PROTECTOR,ELECTRICAL, ORDER FOR KTR ORIG: C226 K.YAMAMI, 080-9350-1447	9B 5975 010345540		NA	4	N	51015094	10/PR	
313	14	1	M	PROTECTOR,ELECTRICAL, ORDER FOR KTR ORIG: C226 K.YAMAMI, 080-9350-1447	9B 5975 010345541		NA	4	N	51015120	30/PR	
314	15	1	M	BLOCK,INSERT, BLOCK, INSERT, MCT, MODULE, OVERALL SIZE: 20 MM X 20 MM X 60 MM LG, APPRICABLE CABLE DIA: 8.5 - 9.5 MM, MATL: LYCRON ORDER FOR KTR ORIG: C226 K.YAMAMI, 080-9350-1447	LL9813310		NA	4	N		25/EA	
315	16	1	M	PROTECTOR,ELECTRICAL, ORDER FOR KTR ORIG: C226 K.YAMAMI, 080-9350-1447	9B 5975 010339616		NA	4	N	51015111	40/PR	
316	17	1	M	PROTECTOR,ELECTRICAL, ORDER FOR KTR ORIG: C226 K.YAMAMI, 080-9350-1447	9B 5975 010339617		NA	4	N	51015131	15/PR	
317	18	1	M	PROTECTOR,ELECTRICAL, ORDER FOR KTR ORIG: C226 K.YAMAMI, 080-9350-1447	9B 5975 010339618		NA	4	N	51015123	5/PR	
318	19	1	M	PROTECTOR,ELECTRICAL, ORDER FOR KTR ORIG: C226 K.YAMAMI, 080-9350-1447	9B 5975 010339619		NA	4	N	51015137	30/PR	
319	20	1	M	PROTECTOR,ELECTRICAL, ORDER FOR KTR ORIG: C226 K.YAMAMI, 080-9350-1447	9B 5975 010340423		NA	4	N	51015132	5/EA	

MATERIAL LIST

ITEM NO.	PC NO.	REF NO.	M / C	DESCRIPTION	STOCK NUMBER	GENERIC MATL TYPE	LVL	QA	HAZ MAT	DOC NO.	QTY REQD/ UNIT	QTY USED/ UNIT
320	21	1	M	BLOCK,SPECIAL,CABLE, ORDER FOR KTR ORIG: C226 K.YAMAMI, 080-9350-1447	9B 5975 013876253		NA	4	N	51015141	5/EA	
321	22	1	M	BLOCK,SPECIAL,CABLE , ORDER FOR KTR ORIG: C226 K.YAMAMI, 080-9350-1447	9B 5975 013876259		NA	4	N	51015114	5/EA	
322	23	1	M	PROTECTOR,ELECTRICAL, ORDER FOR KTR ORIG: C226 K.YAMAMI, 080-9350-1447	9B 5975 010345533		NA	4	N	51015150	10/PR	
323	24	1	M	PROTECTOR,ELECTRICAL, INSERT BLOCK FOR MCT, SIZE: 30 MM X 30 MM X 60 MM LG, APPRICABLE CABLE DIA: 18.5 - 19.5 MM, MATL: LYCRON, ORDER FOR KTR ORIG: C226 K.YAMAMI, 080-9350-1447			NA	4	N		5/EA	
324	25	1	M	PROTECTOR,ELECTRICAL, ORDER FOR KTR ORIG: C226 K.YAMAMI, 080-9350-1447	9B 5975 010345530		NA	4	N	51015086	5/PR	
325	26	1	M	PROTECTOR,ELECTRICAL, ORDER FOR KTR ORIG: C226 K.YAMAMI, 080-9350-1447	9B 5975 010340425		NA	4	N	51015152	5/PR	
326	27	1	M	PROTECTOR,ELECTRICAL, ORDER FOR KTR ORIG: C226 K.YAMAMI, 080-9350-1447	9B 5975 010339620		NA	4	N	51015153	5/PR	
327	28	1	M	BLOCK,INSERT, ORDER FOR KTR ORIG: C226 K.YAMAMI, 080-9350-1447	9B 5975 010345625		NA	4	N	51015128	10/EA	
328	29	1	M	SPACER,CABLE, ORDER FOR KTR ORIG: C226 K.YAMAMI, 080-9350-1447	9B 5975 010356937		NA	4	N	51015165	200/EA	
329	30	1	M	BLOCK,INSERT, ORDER FOR KTR ORIG: C226 K.YAMAMI, 080-9350-1447	9B 5975 010345623		NA	4	N	51015133	20/EA	
330	31	1	M	INSERT,FILLER, ORDER FOR KTR ORIG: C226 K.YAMAMI, 080-9350-1447	9B 5975 013876288		NA	4	N	51015100	30/EA	
331	32	1	M	STAYPLATE,ROXKIT, ORDER FOR KTR ORIG: C226 K.YAMAMI, 080-9350-1447	9B 5975 013876291		NA	4	N	51015124	20/EA	
400	P-1	2	M	PIPE,METALLIC, THIS LEVEL-1 MATERIAL IS ORDERED FOR NON-LEVEL USE. PROVIDE ONE CONTINUOUS LENGTH 20 FT. DO NOT PROVIDE SEPARATELY. ORDERED FOR KTR C234 S.ITO 243-4297	1H 4710 013649574 S1		I	1	N	50865175	20/FT	

MATERIAL LIST

ITEM NO.	PC NO.	REF NO.	M / C	DESCRIPTION	STOCK NUMBER	GENERIC MATL TYPE	LVL	QA	HAZ MAT	DOC NO.	QTY REQD/ UNIT	QTY USED/ UNIT
401	P-2	2	M	TUBE,METALLIC, PROVIDE ONE CONTINUOUS LENGTH 24 FT. DO NOT PROVIDE SEPARATELY. ORDERED FOR KTR C234 S.ITO 243-4297	9B 4710 006406481		NA	4	N	50865147	24/FT	
402	P-2	2	M	TUBE,METALLIC, PROVIDE ONE CONTINUOUS LENGTH 24 FT. DO NOT PROVIDE SEPARATELY. ORDERED FOR KTR C234 S.ITO 243-4297	9B 4710 006406481		NA	4	N	50865148	24/FT	
403	P-3	2	M	TUBE,METALLIC, PROVIDE ONE CONTINUOUS LENGTH 15 FT. DO NOT PROVIDE SEPARATELY. ORDERED FOR KTR C234 S.ITO 243-4297	9B 4710 002774653		NA	4	N	50865176	15/FT	
404	P-4	2	M	TUBE,METALLIC, PROVIDE ONE CONTINUOUS LENGTH 12 FT. DO NOT PROVIDE SEPARATELY. ORDERED FOR KTR C234 S.ITO 243-4297	9B 4710 000871470		NA	4	N	50865140	12/FT	
405	F-1	2	M	COUPLING,TUBE, THIS LEVEL-1 MATERIAL IS ORDERED FOR NON-LEVEL USE. ORDERED FOR KTR C234 S.ITO 243-4297	1H 4730 010294122 S1		I	1	N	50865146	5/EA	
406	F-2	2	M	COUPLING,PIPE, ORDERED FOR KTR C234 S.ITO 243-4297	9B 4730 008227655		NA	4	N	50865099	14/EA	
407	F-3	2	M	COUPLING,TUBE, ORDERED FOR KTR C234 S.ITO 243-4297	9B 4730 014635868		NA	4	N	50865101	4/PG	
408	F-4	2	M	COUPLING, ORDERED FOR KTR C234 S.ITO 243-4297	9C 4730 LL4462249		NA	4	N	50867444	3/EA	
409	F-5	2	M	COUPLING, COUPLING, 1/4 INCH IPS X 1/4 INCH OD, SW, 6,000PSI, CRES 304L, 803-1385850 SHEET 5 FIG 15. ORDERED FOR KTR C234 S.ITO 243-4297	9B 4730 LL4457967		NA	4	N	50917461	9/EA	
410	F-6	2	M	COUPLING, COUPLING, 1/4 INCH IPS X 1/4 INCH OD, DIRECT SOCKETWELD/BRAZE COUPLING (PIPE X TUBE), CNA 70-30, 6,000PSI CPV CAT 107 ORDERED FOR KTR C234 S.ITO 243-4297	9B 4730 LL4752043		NA	4	N	50917465	7/EA	
411	F-7	2	M	ELBOW,PIPE, ORDERED FOR KTR C234 S.ITO 243-4297	9B 4730 014637030		NA	4	N	50865055	4/EA	
412	F-8	2	M	SLEEVE,BULKHEAD AND, ORDERED FOR KTR C234 S.ITO 243-4297	9B 2040 002730683		NA	4	N	50865103	24/EA	
420			M	GAKSET S, ORDERED FOR KTR C234 S.ITO 243-4297	9B 5330 LL9005127		NA	4	N	50867445	4/SH	

MATERIAL LIST

ITEM NO.	PC NO.	REF NO.	M / C	DESCRIPTION	STOCK NUMBER	GENERIC MATL TYPE	LVL	QA	HAZ MAT	DOC NO.	QTY REQD/ UNIT	QTY USED/ UNIT
421			M	GASKET SHEET, GASKET, OIL RESISTANT, SPEC: ASTM D2000. (FORMER GARLOCK STYLE 361), THICKNESS: 1/8" , SIZE: 36"W X 50FT LG, MATL: RUBBER, SYNTHETIC, 55-65 DUROMETER, SMOOTH FINISH, 2000 TENSILE PSI, 250PSI ORDERED FOR KTR C234 S.ITO 243-4297	9B 5330 LL9001144		NA	4	N	50917490	1/RO	
422			M	RUBBER SHEET,SOLID,, ORDERED FOR KTR C234 S.ITO 243-4297	9B 5330 014905014		NA	4	N	50865177	1/RO	
423			M	RUBBER SHEET,SOLID,, ORDERED FOR KTR C234 S.ITO 243-4297	9B 5330 014909769		NA	4	N	50865145	1/RO	
424			M	GASKET,SPIRAL WOUND, ORDERED FOR KTR C234 S.ITO 243-4297	9B 5330 013387910		NA	4	N	50865178	3/EA	
425			M	GASKET,SPIRAL WOUND, ORDERED FOR KTR C234 S.ITO 243-4297	9B 5330 013387823		NA	4	N	50865106	5/EA	
426			M	STRAINER ELEMENT,SE, ORDERED FOR KTR C234 S.ITO 243-4297	9B 4730 004321293		NA	4	N	50865144	3/EA	
427			M	GASKET,SPIRAL WOUND, ORDERED FOR KTR C234 S.ITO 243-4297	9B 5330 013882138		NA	4	N	50865179	1/EA	
428			M	COUPLING,TUBE, ORDERED FOR KTR C234 S.ITO 243-4297	9B 4730 014635857		NA	4	N	50865108	1/EA	
429			M	COUPLING,TUBE, ORDERED FOR KTR C234 S.ITO 243-4297	9B 4730 014635873		NA	4	N	50865112	1/EA	
430			M	COUPLING,PIPE, ORDERED FOR KTR C234 S.ITO 243-4297	9B 4730 005425104		NA	4	N	50865114	2/EA	
431			M	SLEEVE,, ORDERED FOR KTR C234 S.ITO 243-4297	9C 4730 LL4742596		NA	4	N	50867446	4/EA	
432			M	COUPLING,TUBE, ORDERED FOR KTR C234 S.ITO 243-4297	9B 4730 007225471		NA	4	N	50865117	4/PG	
433			M	COUPLING,TUBE, ORDERED FOR KTR C234 S.ITO 243-4297	9B 4730 007225467		NA	4	N	50865059	1/FV	
434			M	SLEEVE,, ORDERED FOR KTR C234 S.ITO 243-4297	9C 4730 LL4903762		NA	4	N	50867447	4/EA	
435			M	GASKET MATERIAL,SHE, ORDERED FOR KTR C234 S.ITO 243-4297	9B 5330 015287656		NA	4	N	50865115	1/SH	
436			M	GASKET,SPIRAL WOUND, ORDERED FOR KTR C234 S.ITO 243-4297	9B 5330 013387835		NA	4	N	50865116	3/EA	
437			M	FIBER SHEET,GASKET, ORDERED FOR KTR C234 S.ITO 243-4297	9B 5330 012880775		NA	4	Y	50865139	1/SH	
438			M	COUPLING,PIPE, ORDERED FOR KTR C234 S.ITO 243-4297	9B 4730 011060796		NA	4	N	50865180	2/EA	

MATERIAL LIST

ITEM NO.	PC NO.	REF NO.	M / C	DESCRIPTION	STOCK NUMBER	GENERIC MATL TYPE	LVL	QA	HAZ MAT	DOC NO.	QTY REQD/ UNIT	QTY USED/ UNIT
439			M	BACKING RING, BACKING RING, SIZE: 12 INCH IPS, WIDTH: 1 INCH, CARBON STEEL, SCH 20, MIL-STD-22. ORDERED FOR KTR C234 S.ITO 243-4297	9B 4730 LL9311313		NA	4	N	50917468	3/EA	
440			M	BACKING RING, PIPE HANGER, TYPE-1 SIZE: 1-1/2"IPS X 15"LG. MATL: STEEL, LINER WITH RUBBER MIL-R-6855 CLASS II 60 DUROMETER. DWG: 810-4714432 PREMIER COPPER P/N: PH431300 ORDERED FOR KTR C234 S.ITO 243-4297	9B 4730 LL9304921		NA	4	N	51057614	4/EA	
441			M	COUPLING,PIPE, ORDERED FOR KTR C234 S.ITO 243-4297	9B 4730 011854331		NA	4	N	50865063	2/EA	
442			M	COUPLING,PIPE, ORDERED FOR KTR C234 S.ITO 243-4297	9B 4730 008227655		NA	4	N	50865069	2/EA	
443			M	COUPLING,TUBE, ORDERED FOR KTR C234 S.ITO 243-4297	9B 4730 007225471		NA	4	N	50865105	2/PG	
444			M	COUPLING,TUBE, ORDERED FOR KTR C234 S.ITO 243-4297	9B 4730 007225467		NA	4	N	50865107	2/FV	
445			M	COUPLING,TUBE, ORDERED FOR KTR C234 S.ITO 243-4297	9B 4730 014635857		NA	4	N	50865073	2/EA	
446			M	SLEEVE,, ORDERED FOR KTR C234 S.ITO 243-4297	9C 4730 LL4742596		NA	4	N	50867448	3/EA	
447			M	COUPLING,TUBE, ORDERED FOR KTR C234 S.ITO 243-4297	9B 4730 014635873		NA	4	N	50865075	3/EA	
448			M	BACKING, ORDERED FOR KTR C234 S.ITO 243-4297	9C 4730 LL4558781		NA	4	N	50867449	2/EA	
449			M	BACKING, ORDERED FOR KTR C234 S.ITO 243-4297	9C 4730 LL4558777		NA	4	N	50867450	4/EA	
450			M	COUPLING,TUBE, ORDERED FOR KTR C234 S.ITO 243-4297	9B 4730 014635878		NA	4	N	50865078	5/EA	
451			M	SLEEVE,, ORDERED FOR KTR C234 S.ITO 243-4297	9C 4730 LL4903762		NA	4	N	50867451	2/EA	
452			M	TUBE,METALLIC, ORDERED FOR KTR C234 S.ITO 243-4297	9B 4710 002898004		NA	4	N	50865135	5/FT	
453			M	DECK SLEEVE, SLEEVE, WELDED BULKHEAD OR DECK SLEEVES, FOR PIPING 1-1/4 INCH IPS, SIZE: 2.000 INCH OD X 0.166 INCH THK X 1.668 INCH ID, IAW: AGC19 WELDED BHD OR DK SLEEVES FOR IPS PIPING 545-2492627, TYPE D, ASTM A500, GRADE A, CARBON STEEL ORDERED FOR KTR C234 S.ITO 243-4297	9B 4730 LL9308347		NA	4	N	51057615	1/EA	
454			M	COUPLING,TUBE, ORDERED FOR KTR C234 S.ITO 243-4297	9B 4730 014635857		NA	4	N	50865109	2/EA	

MATERIAL LIST

ITEM NO.	PC NO.	REF NO.	M / C	DESCRIPTION	STOCK NUMBER	GENERIC MATL TYPE	LVL	QA	HAZ MAT	DOC NO.	QTY REQD/ UNIT	QTY USED/ UNIT
455			M	COUPLING,PIPE, ORDERED FOR KTR C234 S.ITO 243-4297	9B 4730 011963902		NA	4	N	50865143	2/EA	
456			M	COUPLING,PIPE, ORDERED FOR KTR C234 S.ITO 243-4297	9B 4730 011854331		NA	4	N	50865080	2/EA	
457			M	BACKING RING, BACKING RING, SIZE: 2 INCH IPS, 3/4 INCH WIDE, CARBON STEEL, SCH 40, MIL-STD-22D ORDERED FOR KTR C234 S.ITO 243-4297	9B 4730 LL9304381		NA	4	N	50887408	2/EA	
460	1-1,2	3	M	PLATE,METAL, ORDERED FOR KTR C234 S.ITO 243-4297	9B 9515 002044573		NA	4	N	50865138	1/PM	
461	1-3	3	M	BAR,METAL, PROVIDE ONE CONTINUOUS LENGTH 5FT. DO NOT PROVIDE SEPARATELY. ORDERED FOR KTR C234 S.ITO 243-4297	9B 9510 000759623		NA	4	N	50865136	5/FT	
462	2	3	M	BAR,METAL, PROVIDE ONE CONTINUOUS LENGTH 5FT. DO NOT PROVIDE SEPARATELY. ORDERED FOR KTR C234 S.ITO 243-4297	9B 9510 001890598		NA	4	N	50865151	5/FT	
463	3	3	M	STUD, CONT THREAD, STUD, CONT THRD, 3/8-16UNC-2A X 1-1/2 INCH LG, CRES, COLD WORKED GRADE 316, NO LOCKING ELEMENT, NO COATING ORDERED FOR KTR C234 S.ITO 243-4297	9B 5307 LL6877582		NA	4	N	50917499	24/EA	
464	4	3	M	STUD, STUD, 1/4-20UNC-2A X 2 INCH LG, CRES 316, MIL-DTL-1222, TYPE IV, CONTINUOUS THREAD ORDERED FOR KTR C234 S.ITO 243-4297	9B 5304 LL9812504		NA	4	N	50917496	8/EA	
465	5	3	M	SCREW,CAP,HEXAGON H, ORDERED FOR KTR C234 S.ITO 243-4297	9B 5305 002078253		NA	4	N	50865118	8/EA	
466	6	3	M	SCREW,CAP,HEXAGON H, ORDERED FOR KTR C234 S.ITO 243-4297	9B 5305 000213620		NA	4	N	50865085	8/PG	
467	7	3	M	NUT,SELF-LOCKING,HE, ORDERED FOR KTR C234 S.ITO 243-4297	9B 5310 009146028		NA	4	N	50865150	24/EA	
468	8	3	M	NUT,SELF-LOCKING,HE, ORDERED FOR KTR C234 S.ITO 243-4297	9B 5310 009291807		NA	4	N	50865087	24/EA	
469	9	3	M	WASHER,FLAT, ORDERED FOR KTR C234 S.ITO 243-4297	9B 5310 009032612		NA	4	N	50865142	24/EA	
470	10	3	M	WASHER,FLAT, ORDERED FOR KTR C234 S.ITO 243-4297	9B 5310 007633925		NA	4	N	50865149	1/HD	
471	11	3	M	PACKING MATERIAL, ORDERED FOR KTR C234 S.ITO 243-4297	9B 5330 010115050		NA	4	N	50865134	1/RO	
472	12	3	M	RUBBER SHEET,SOLID,, ORDERED FOR KTR C234 S.ITO 243-4297	9B 5330 014905071		NA	4	N	50865119	1/SH	

MATERIAL LIST

ITEM NO.	PC NO.	REF NO.	M / C	DESCRIPTION	STOCK NUMBER	GENERIC MATL TYPE	LVL	QA	HAZ MAT	DOC NO.	QTY REQD/ UNIT	QTY USED/ UNIT
473	13	3	M	RUBBER SHEET SOLID, ORDERED FOR KTR C234 S.ITO 243-4297	9B 5330 014905051		NA	4	N	50865133	1/SH	
500			M	CLOTH,PLAIN WEAVE, H/W GLASS CLOTH, 5 FT X 150 FT LONG PER ROLL, COLOR IS WHITE, ORDERED FOR KTR ORIG: C234 T. TSUNOI, 070-7787-2058	9B 8305 001487364		NA	4	N	50865127	1/RO	
501			M	CEMENT,INSULATION,H, CEMENT, 45LB/BG, ORDERED FOR KTR ORIG: C234 T. TSUNOI, 070-7787-2058	9Q 5640 002264540		NA	4	Y	50865041	5/BG	
502			M	INSULATION SLEEVING, 2"IPS X 1-1/2"THK ORDERED FOR KTR ORIG: C234 T. TSUNOI, 070-7787-2058	9Q 5640 010420967		NA	4	N	50865153	2/EA	
503			M	SILICA PIPE COVER,, SILICA PIPE COVER, SIZE: 2" IPS X 2" THK, 3 FT LONG PER EACH, 8 EA/BOX, NON-ASBESTOS ORDERED FOR KTR ORIG: C234 T. TSUNOI, 070-7787-2058	9Q 5640 LL6995230		NA	4	N	50887407	8/EA	
504			M	INSULATION SLEEVING,, INSULATION SLEEVING, THERMAL, 2 INCH IPS, 3 INCH THK, 3 FT ORDERED FOR KTR ORIG: C234 T. TSUNOI, 070-7787-2058	9Q 5640 002012615		NA	4	N	50865137	7/EA	
505			M	INSULATI, INSULATION, FIBROUS GLASS, THERMAL, BLANKET WITHOUT BINDER, UNFACED, SIZE: 5FT W X 45FT L X 1"THK, MIL-DTL-32585, TYPE I, FORM 3, NSN: 5640-00-173-6591 (NSN MISTAKENLY INDICATES FACING D, BUT CORRECT ITEM IN THIS NSN IS UNFACED.) ORDERED FOR KTR ORIG: C234 T. TSUNOI, 070-7787-2058	9Q 5640 LL9607458		NA	4	N	50867400	1/RO	
506			M	INSULATION SLEEVING, SILICA 6 INCH IPS X 3-1/2 INCH THK ORDERED FOR KTR ORIG: C234 T. TSUNOI, 070-7787-2058	9Q 5640 005513476		NA	4	N	50865152	5/EA	

MATERIAL LIST

ITEM NO.	PC NO.	REF NO.	M / C	DESCRIPTION	STOCK NUMBER	GENERIC MATL TYPE	LVL	QA	HAZ MAT	DOC NO.	QTY REQD/ UNIT	QTY USED/ UNIT
507			M	INSULATION SHEET, INSULATION, FLAT SHEET, BRAND: K-FLEX ECO, SPECIFICATION COMPLIANCE: EB 4013, FOR SIZE: 36"W X 48"L X 3/4" THK, MATL: NON-HALOGEN, **GSA ADVANTAGE AVAILABLE** 8SH/BOX. ORDERED FOR KTR ORIG: C234 T. TSUNOI, 070-7787-2058	9B 5640 LL9607854		NA	4	N	50867401	8/SH	
508			M	CLOTH,PLAIN WEAVE, CLOTH WEIGHT: 8.50 OUNCES PER SQUARE YARD PLUS OR MINUS 0.10 (10%) OUNCES PER SQUARE YARD; LENGTH: 50 YARDS PLUS OR MINUS 5 YARDS; WIDTH: 60 INCHES PLUS OR MINUS 1 INCH COLOR: NATURAL BOTH SIDES ORDERED FOR KTR ORIG: C234 T. TSUNOI, 070-7787-2058	9B 8305 001487363		NA	4	N	50865120	1/RO	
509			M	INSULATION, PIPE, INSULATION, PIPE, BRAND: K-FLEX ECO, SPECIFICATION COMPLIANCE: EB 4013, FOR SIZE: 3/4" IPS, SIZE: 1-1/8" ID X 3/4" THK X 6FT LG, UI: EA/6 FT(ONE CONTINUOUS LENGTH REQUIRED), MATL: NON-HALOGEN, **GSA ADVANTAGE ITEM** ORDERED FOR KTR ORIG: C234 T. TSUNOI, 070-7787-2058	9B 5640 LL9607842		NA	4	N	50867402	6/EA	
510			M	INSULATION PIPE, INSULATION, PIPE, BRAND: K-FLEX ECO, SPECIFICATION COMPLIANCE: EB 4013, FOR SIZE: 2" IPS, SIZE: 2-3/8" ID X 3/4" THK X 6 FT LG, UI: EA/6 FT(ONE CONTINUOUS LENGTH REQUIRED), MATL: NON-HALOGEN, 8 EA/BOX. ORDERED FOR KTR ORIG: C234 T. TSUNOI, 070-7787-2058	9B 5970 LL9607844		NA	4	N	50867403	2/EA	
511			M	ADHESIVE, ADHESIVE FOR CLOTH, ORDERED FOR KTR ORIG: C234 T. TSUNOI, 070-7787-2058	9B 8040 002738708		NA	4	Y	50865083	4/GL	
512			M	ADHESIVE, ADHESHIVE ORDERED FOR KTR ORIG: C234 T. TSUNOI, 070-7787-2058	9B 8040 008419773		NA	4	Y	50865043	5/PT	

MATERIAL LIST

ITEM NO.	PC NO.	REF NO.	M / C	DESCRIPTION	STOCK NUMBER	GENERIC MATL TYPE	LVL	QA	HAZ MAT	DOC NO.	QTY REQD/ UNIT	QTY USED/ UNIT
513			M	SEALING COMPOUND, VAPOR BARRIER COATING FOR INSULATED REFRIGERANT AND CHILLED WATER LINES ORDERED FOR KTR ORIG: C234 T. TSUNOI, 070-7787-2058	9B 8030 001742588		NA	4	Y	50865067	1/GL	
514			M	GASKET,SPIRAL WOUND, GASKET, SPIRAL 4" #150 ORDERED FOR KTR ORIG: C234 T. TSUNOI, 070-7787-2058	9B 5330 013387835		NA	4	N	50865121	3/EA	
515			M	GASKET GRAPH-LOCK, COLOR: BLACK, ASTM F38,F36,F152., 0.002" 316SS FOIL INSERTED, TEMP: -240C~3000C, 2000PSI MAX, SIZE: 60"W X 60"W X 1/8"THK, NAVSEA GSO 2004, SERVICE ENGINEERING (ISE) ADVISORY NO. 011-04 MIL-DTL-24696/GASKET ORDERED FOR KTR ORIG: C234 T. TSUNOI, 070-7787-2058	9B 5330 LL4571948		NA	4	N	50917489	1/SH	
516			M	GASKET, GARLOCK BLUE GARD 3200 50"X50"X 1/8" ORDERED FOR KTR ORIG: C234 T. TSUNOI, 070-7787-2058	9B 5330 013865379		NA	4	N	50865122	2/SH	
517			M	INSULATION SLEEVING, KEICAL ACE SUPER SILICA, 1/2" X 1-1/4"THK(30MM) X 2'LENGTH(610MM), TOMBO, 35EA/BOX. ORDERED FOR KTR ORIG: C234 T. TSUNOI, 070-7787-2058	9Q 5640 LL4465715		NA	4	N	50867806	8/EA	
518			M	INSULATION SLEEVING, KEICAL ACE SUPER SILICA, 3/4" IPS X 1-1/4" THK X 2FT LONG, 30EA/BOX. ORDERED FOR KTR ORIG: C234 T. TSUNOI, 070-7787-2058	9Q 5640 LL4470572		NA	4	N	50917803	5/EA	
519			M	INSULATION SLEEVING, SILICA PIPE COVER SIZE:1" IPS X 2-1/2" THK, 3 FT LONG PER EACH ORDERED FOR KTR ORIG: C234 T. TSUNOI, 070-7787-2058	9Q 5640 002695982		NA	4	N	50865131	3/EA	
520			M	INSULATION SLEEVING, SIZE: 1-1/4"IPS X 2-1/2"THK, 3 FEET LONG PER EACH ORDERED FOR KTR ORIG: C234 T. TSUNOI, 070-7787-2058	9Q 5640 002078241		NA	4	N	50865141	5/EA	

MATERIAL LIST

ITEM NO.	PC NO.	REF NO.	M / C	DESCRIPTION	STOCK NUMBER	GENERIC MATL TYPE	LVL	QA	HAZ MAT	DOC NO.	QTY REQD/ UNIT	QTY USED/ UNIT
521			M	INSULATION SLEEVING, INSULATION SLEEVING, THERMAL, SILICA PIPE COVER, SIZE: 4"IPS X 2-1/2"THK X 36" LG, NON-ASBESTOS, SPEC: MIL-PRF-2781, TYPE I, QPL-2781, 6EA/BOX. ORDERED FOR KTR ORIG: C234 T. TSUNOI, 070-7787-2058	9Q 5640 LL6995227		NA	4	N	50947607	1/BX	
522			M	KEICAL A, KEICAL ACE SUPER SILICA, TOMBO, SIZE: 1" X 1-1/4"THK (30MM) X 2'LENGTH (610MM), 28EA/BOX. *MUST BE ORDERED IN MULTIPLES OF 28EA* **** EQUAL TO INDUSTRIAL INSULATION GROUP(DESIGNATED MFR BY QPL-2781) MODEL# THERMO-12 GOLD, BUT IT DOES NOT HAVE 1/4"INCREMENTS THICKNESS ****	9Q 5640 LL4465714		NA	4	N	50917806	3/EA	
523			M	SILICA PIPE COVER, SILICA PIPE COVER, 1-1/4"IPS X 1-1/4"THK (30MM)SILICA PIPE COVER, NON ASBESTOS EACH / 2FT LG ORDERED FOR KTR ORIG: C234 T. TSUNOI, 070-7787-2058	9Q 5640 LL4609849		NA	4	N	50917805	5/EA	
524			M	CHIKIN NET,, CHIKIN NET, WIRE MESH, HEXAGONAL WIRE NETTING GALVANIZED STEEL,1RLL=30METER, ORDERED FOR KTR ORIG: C234 T. TSUNOI, 070-7787-2058	9Q 5670 LL4651079		NA	4	N	50867807	1/RL	

FOUO

☐ NUCLEAR

APPENDIX "D"
DEFICIENCY FORM

☐ NON-NUCLEAR

1. SHIP/HULL NO.:	2a. DL or DR No. (Circle One)	2b. REVISION:	3a. COMPONENT NAME:	3b. TYPE:	3c. PHASE:	3d. REPEAT:
LCC-19			STRUCT 6-86-0-E	AY	A	0

4a. ICN:	4b. KEY OP:	5. LOC SPACE/LVL: FRAME: P/S/C:	6. CAUSED BY:
3819P123AG	A01		

7. DESCRIPTION:

8. ORIGINATOR:	NAME:	BADGE:	SHOP/CODE:	DATE:	PHONE NO.:

9. CORRECTIVE ACTION:

10. EVALUATOR:	NAME:	BADGE:	SHOP/CODE:	DATE:	PHONE NO.:

FOR NON-NUCLEAR USE ONLY

11. RFD/RFW REQ'D ☐ LAR REQ'D ☐ ILS MOD REQ'D ☐

SRD/PLAN REV REQ'D ☐ DWG NO.: _____ S/A NO.: _____

12. ISOLATION SATISFACTORY:	SIGN:	BADGE:	SHOP/CODE:	DATE:	PHONE NO.:
13. SUBSAFE OQE RECORD? YES ☐ NO ☐	SIGN:	BADGE:	SHOP/CODE:	DATE:	PHONE NO.
14. CORRECTIVE ACTION COMPLETE:	SIGN:	BADGE:	SHOP/CODE:	DATE:	PHONE NO.
15. INSPECTION REQ'D? :YES ☐ NO ☐	INSPECTION COMPLETE/SIGN:	BADGE:	SHOP/CODE:	DATE:	PHONE NO.
16. RECORDS REVIEW COMPLETE (DR ONLY)	SIGN:	BADGE:	SHOP/CODE:	DATE:	PHONE NO.

DL's ISSUED (DR ONLY)								

☐ NUCLEAR

Deficiency Form Continuation Sheet

☐ NON-NUCLEAR

1. SHIP/HULL NO.:	2a. DL or DR No. (Circle One)	2b. REVISION:	3a. COMPONENT NAME:	3b. TYPE:	3c. PHASE:	3d. REPEAT:
LCC-19			STRUCT 6-86-0-E	AY	A	0

Location of Work

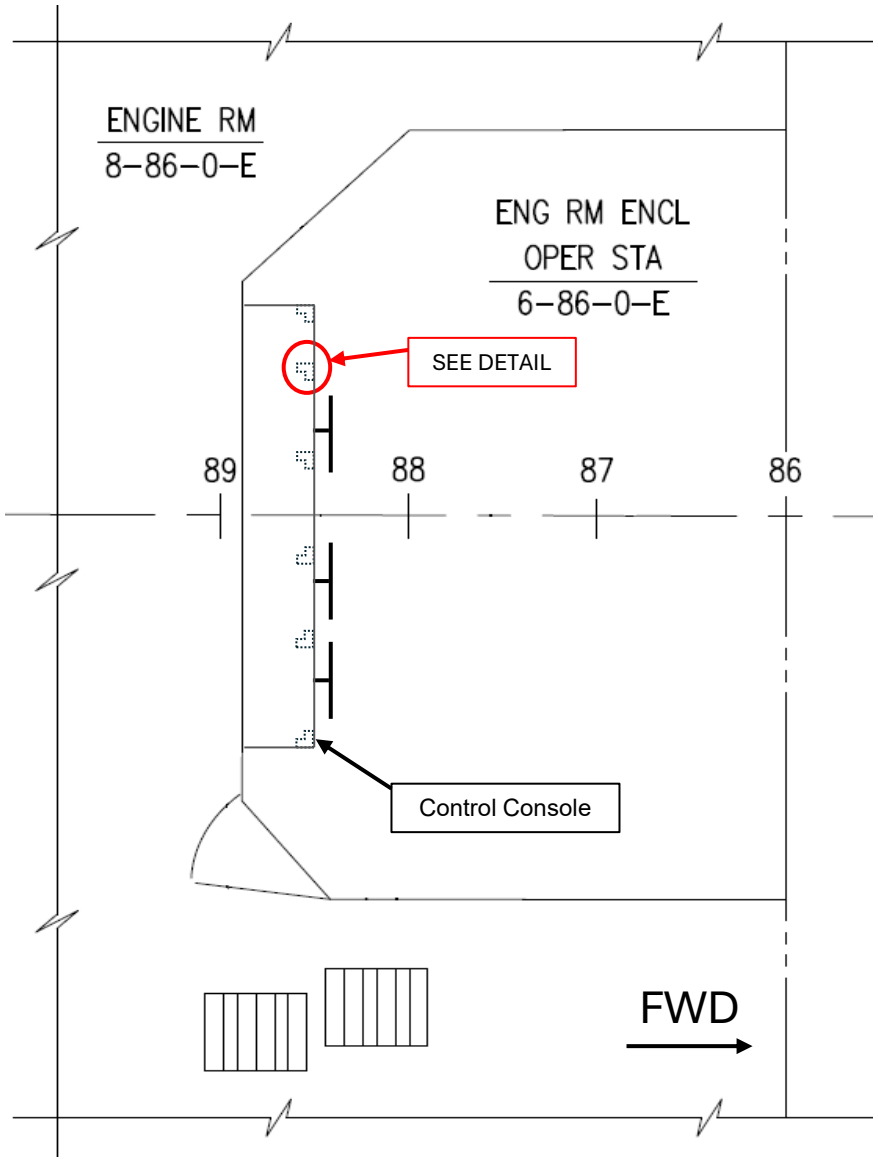

3819P123AGA01

SKETCH
ENCLOSURE-01

ENCLOSED OPERATING ST
6-86-0-E

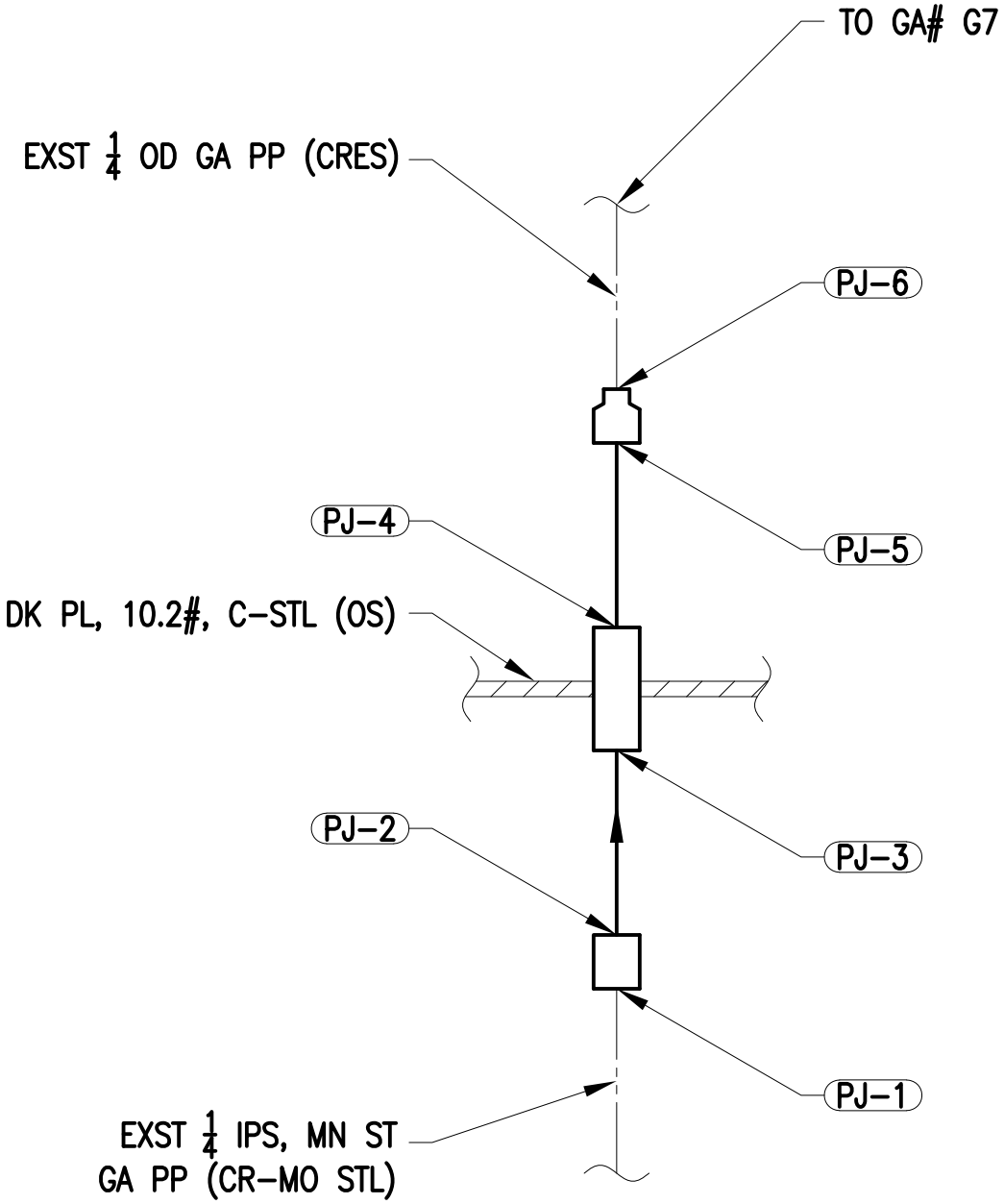

MAPPING PLAN

ENCLOSED OPERATING ST
6-86-0-E

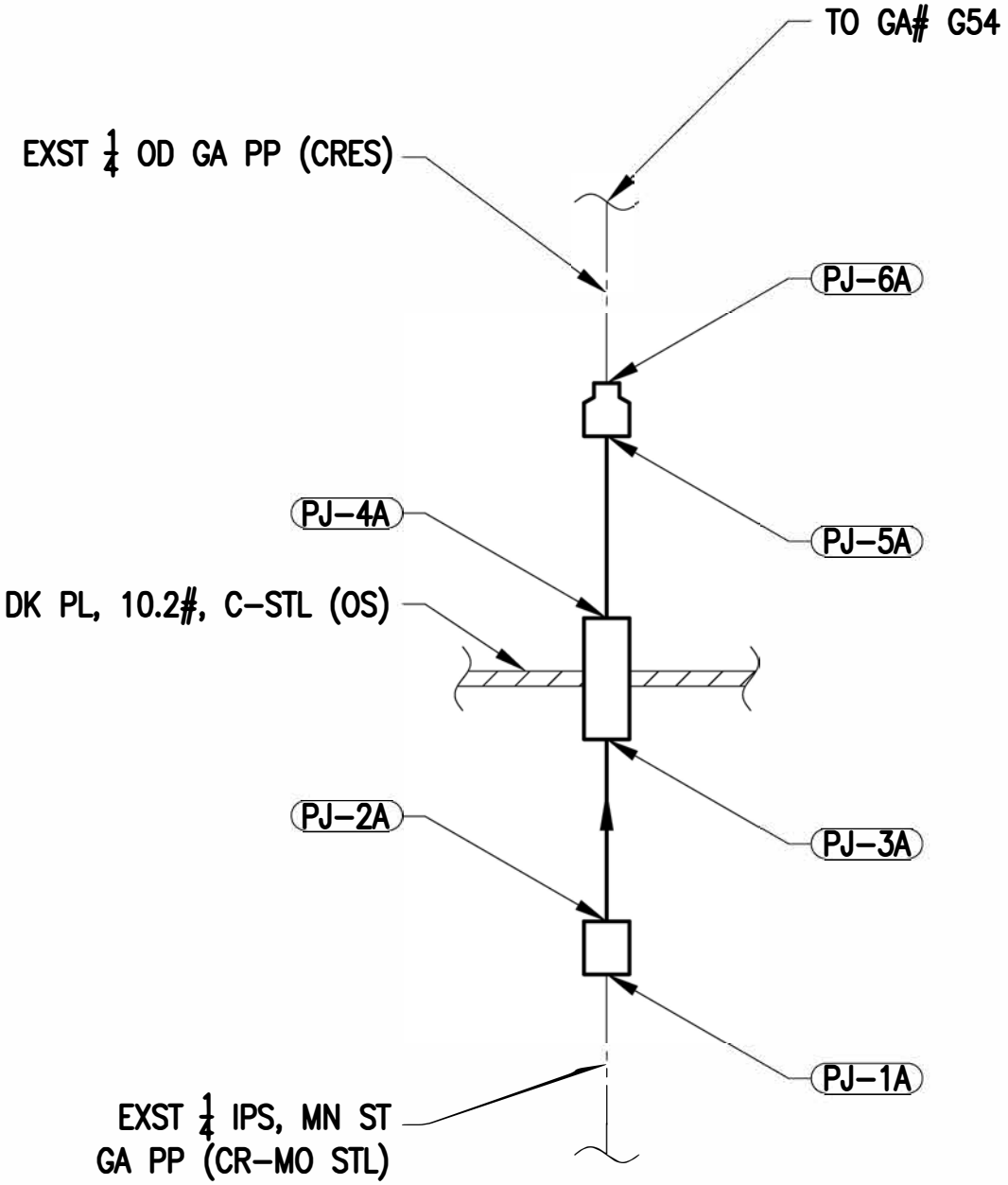

MAPPING PLAN

ENCLOSED OPERATING ST
6-86-0-E

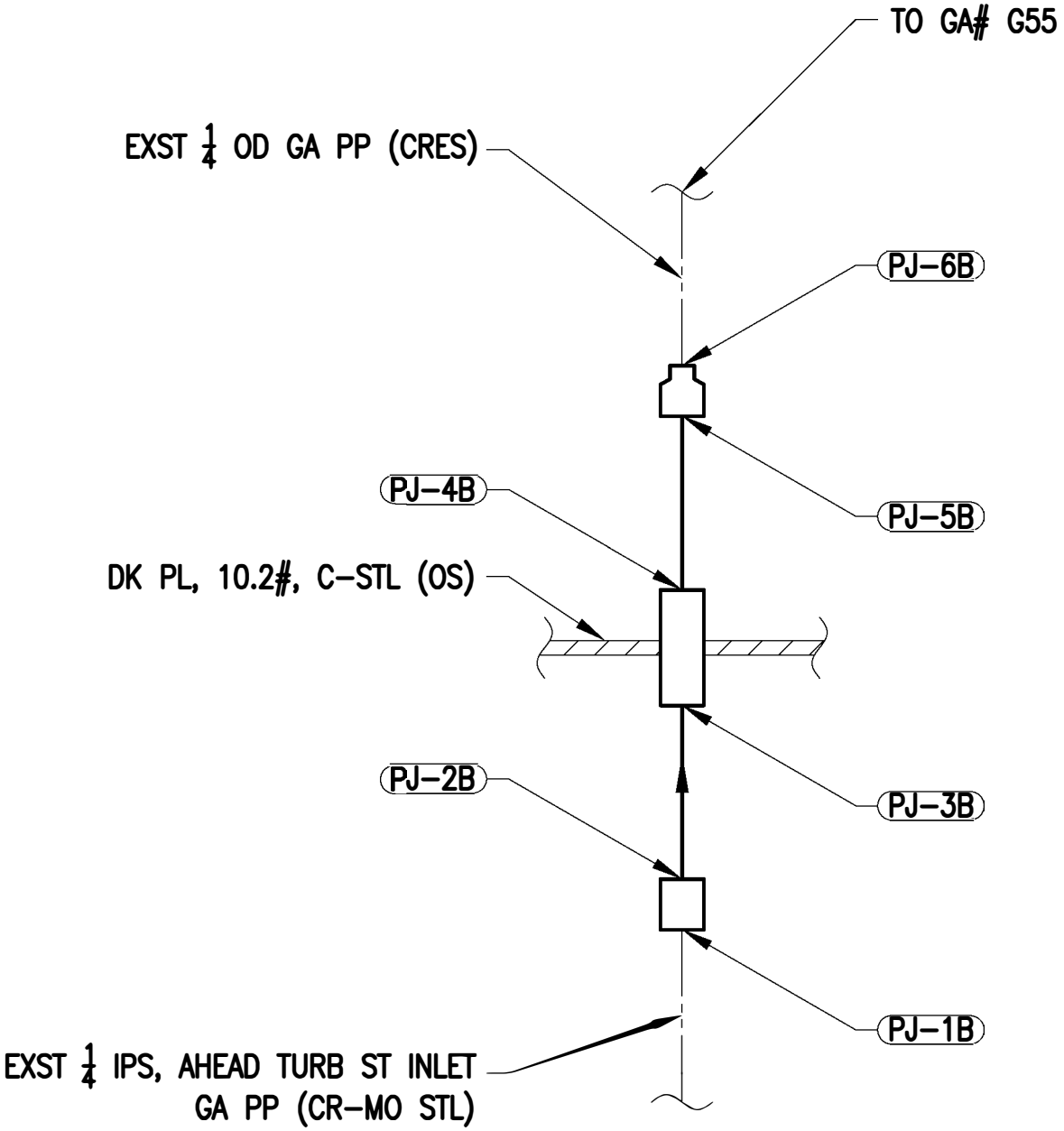

MAPPING PLAN

ENCLOSED OPERATING ST
6-86-0-E

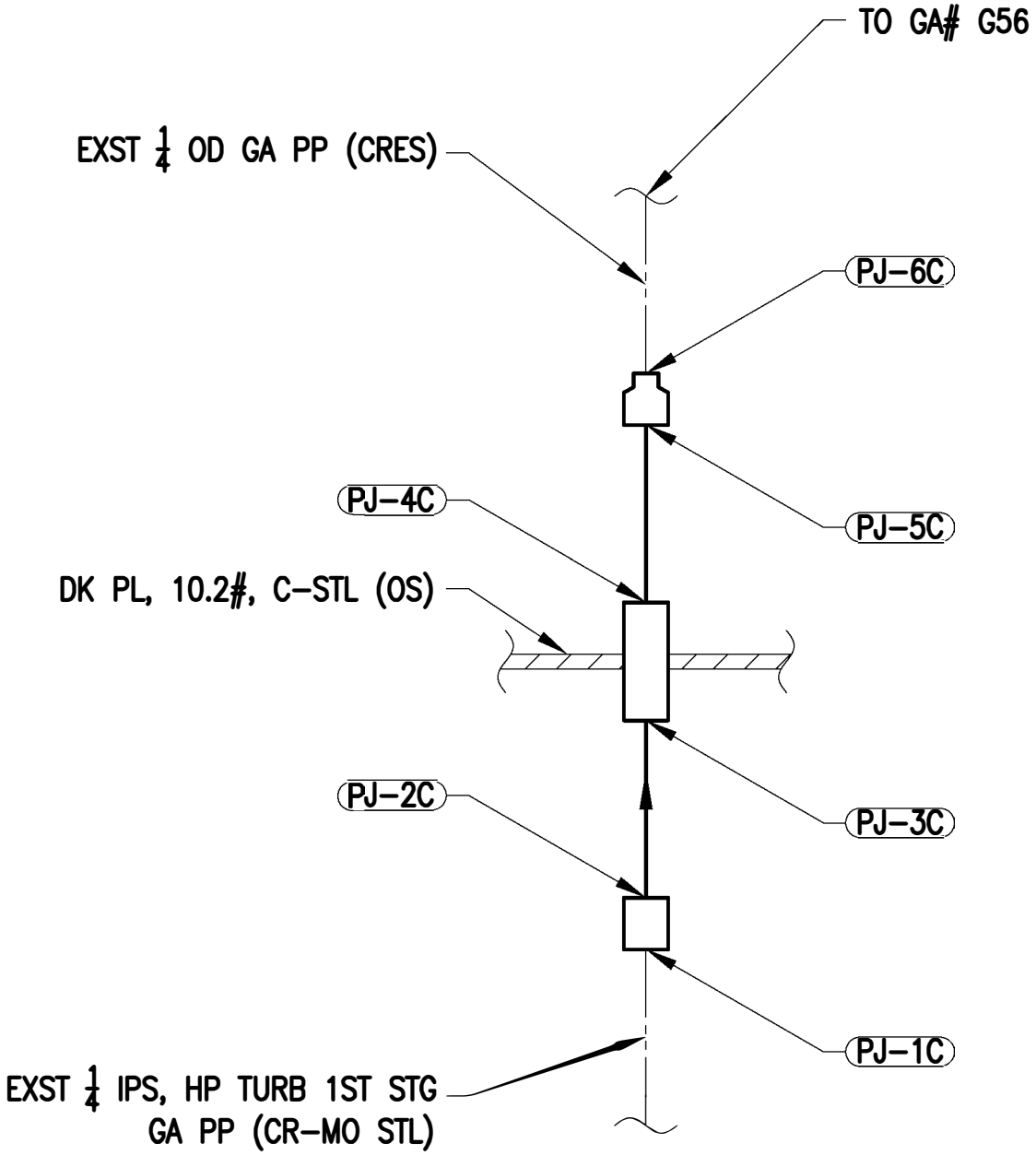

MAPPING PLAN

ENCLOSED OPERATING ST
6-86-0-E

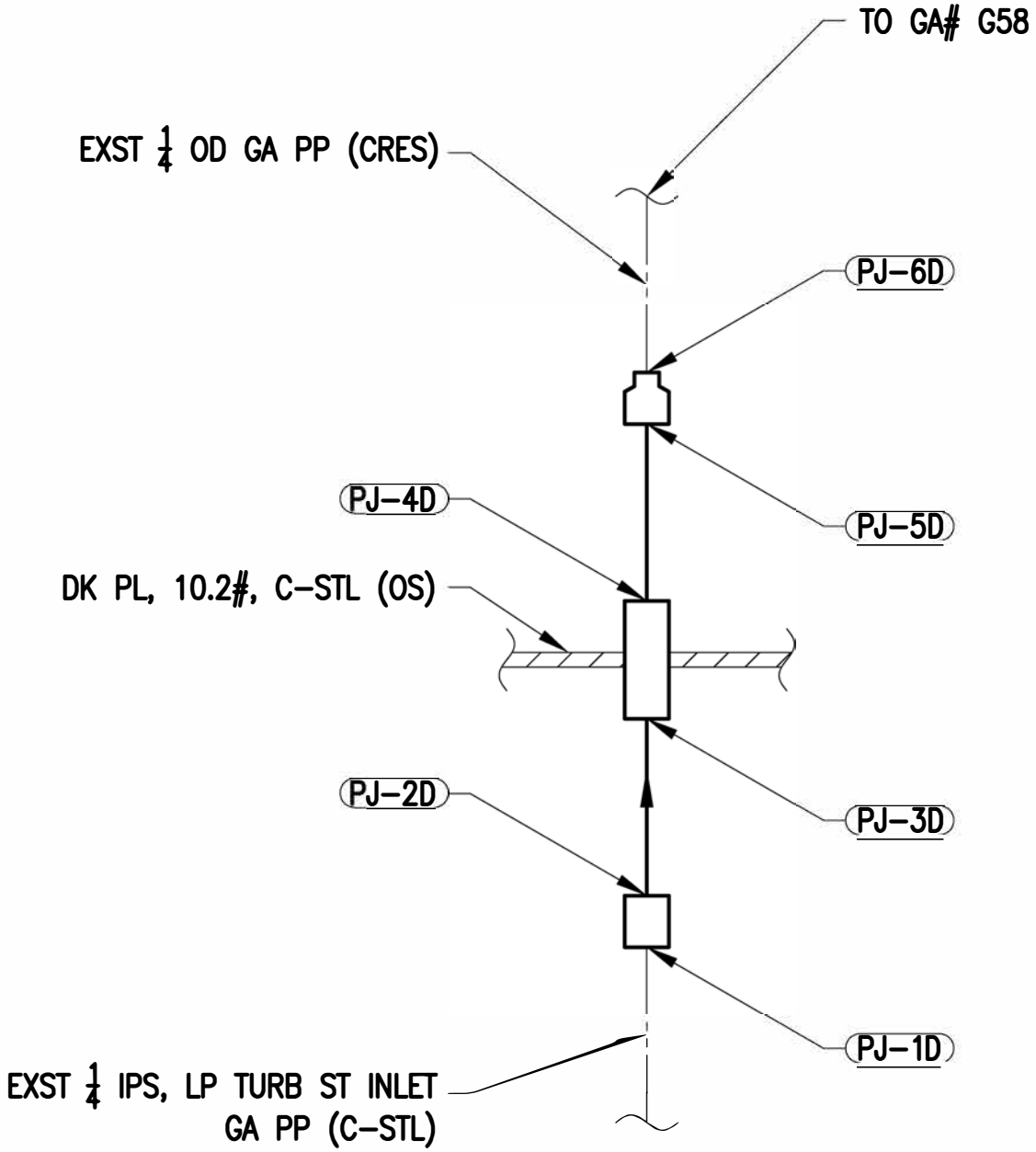

MAPPING PLAN

ENCLOSED OPERATING ST
6-86-0-E

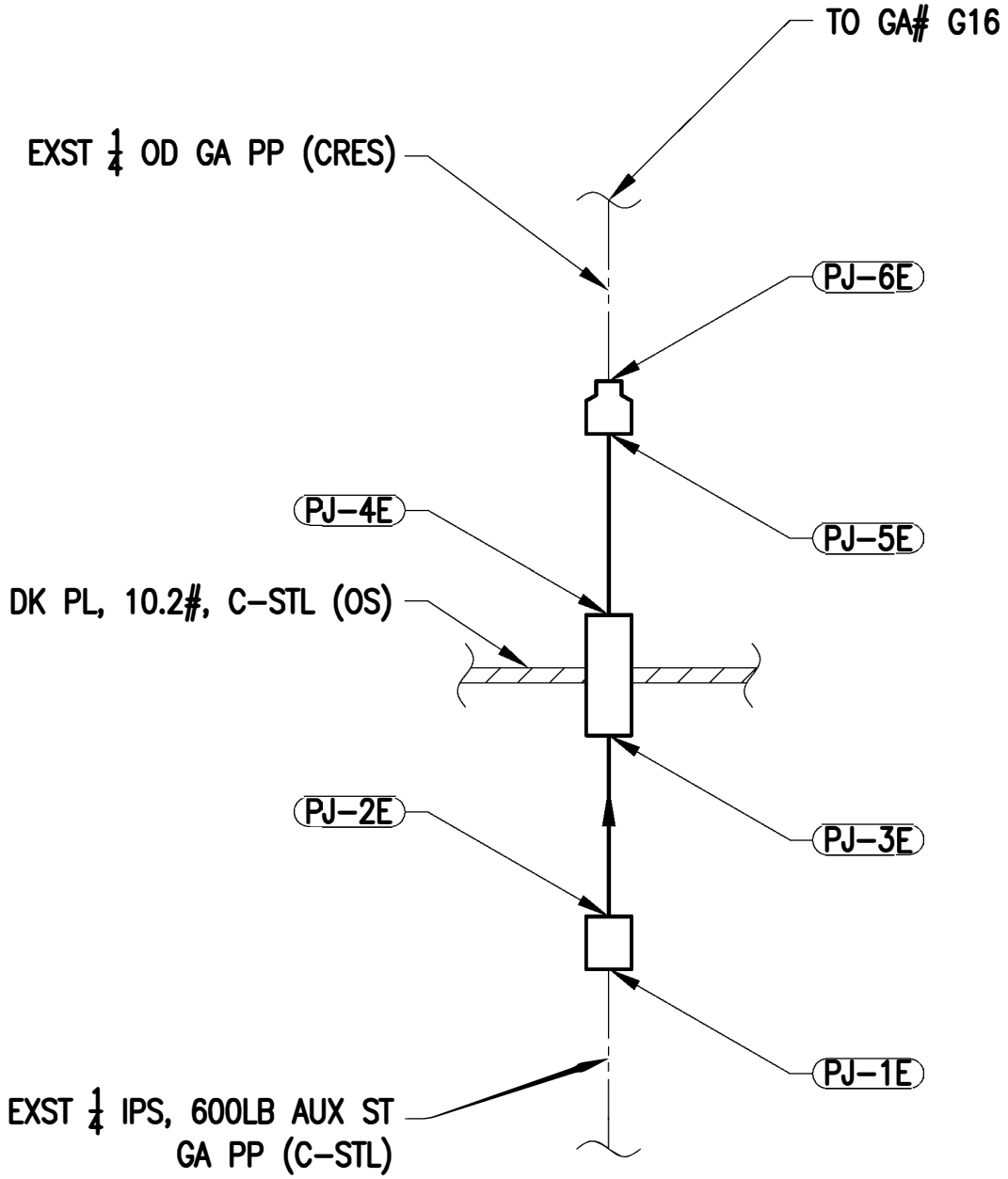

MAPPING PLAN

ENCLOSED OPERATING ST
6-86-0-E

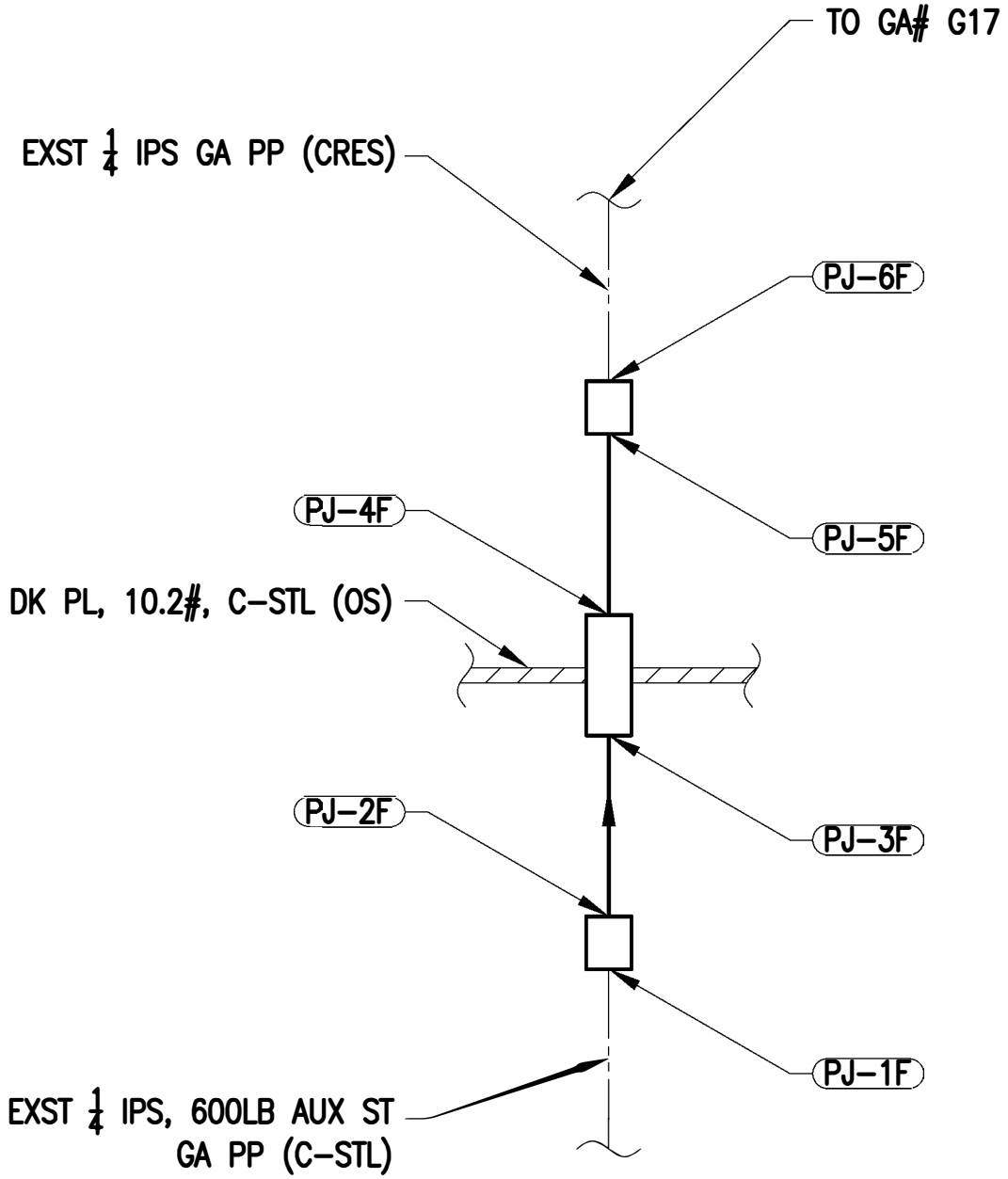

MAPPING PLAN

ENCLOSED OPERATING ST
6-86-0-E

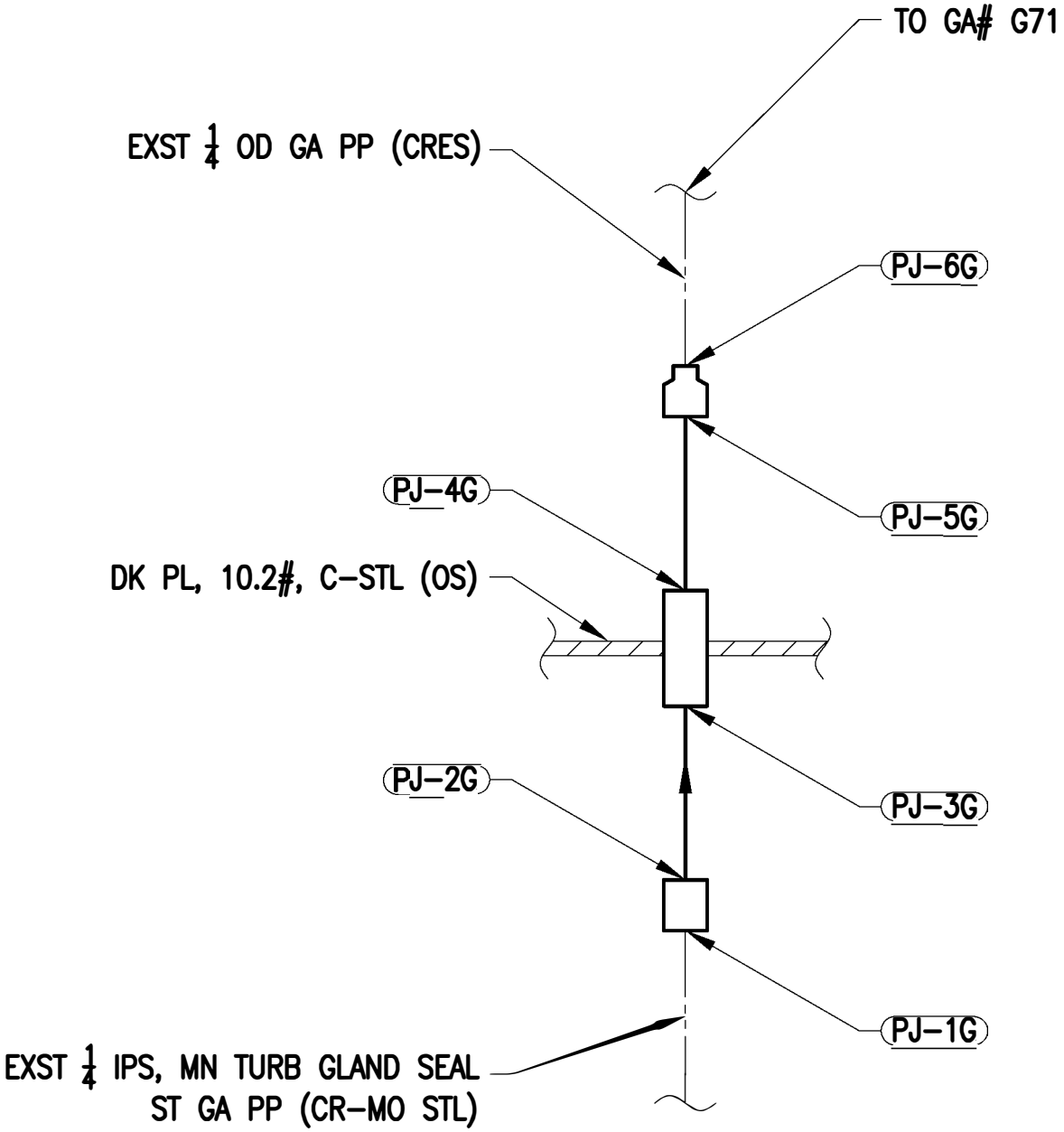

MAPPING PLAN

ENCLOSED OPERATING ST
6-86-0-E

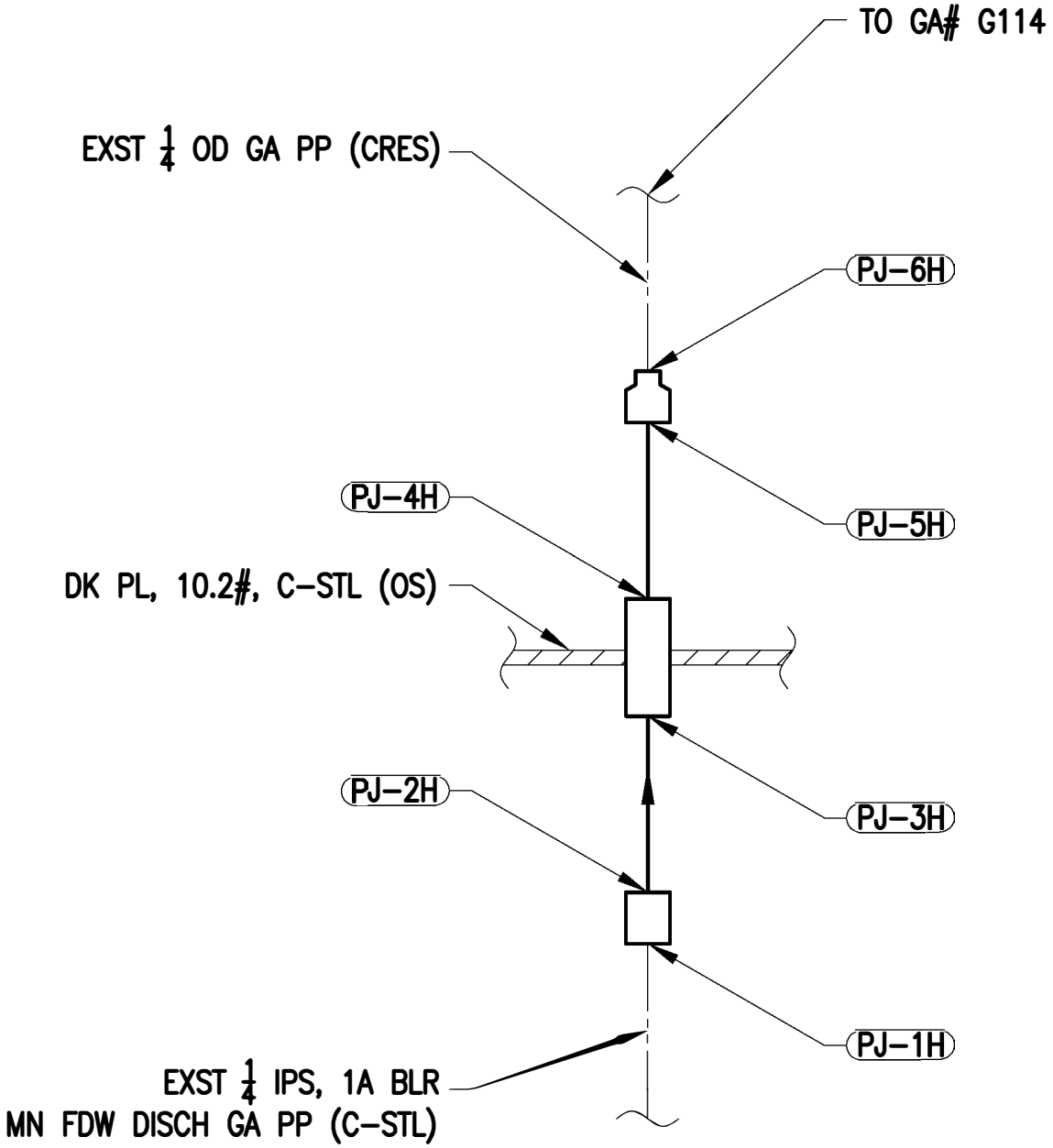

MAPPING PLAN

ENCLOSED OPERATING ST
6-86-0-E

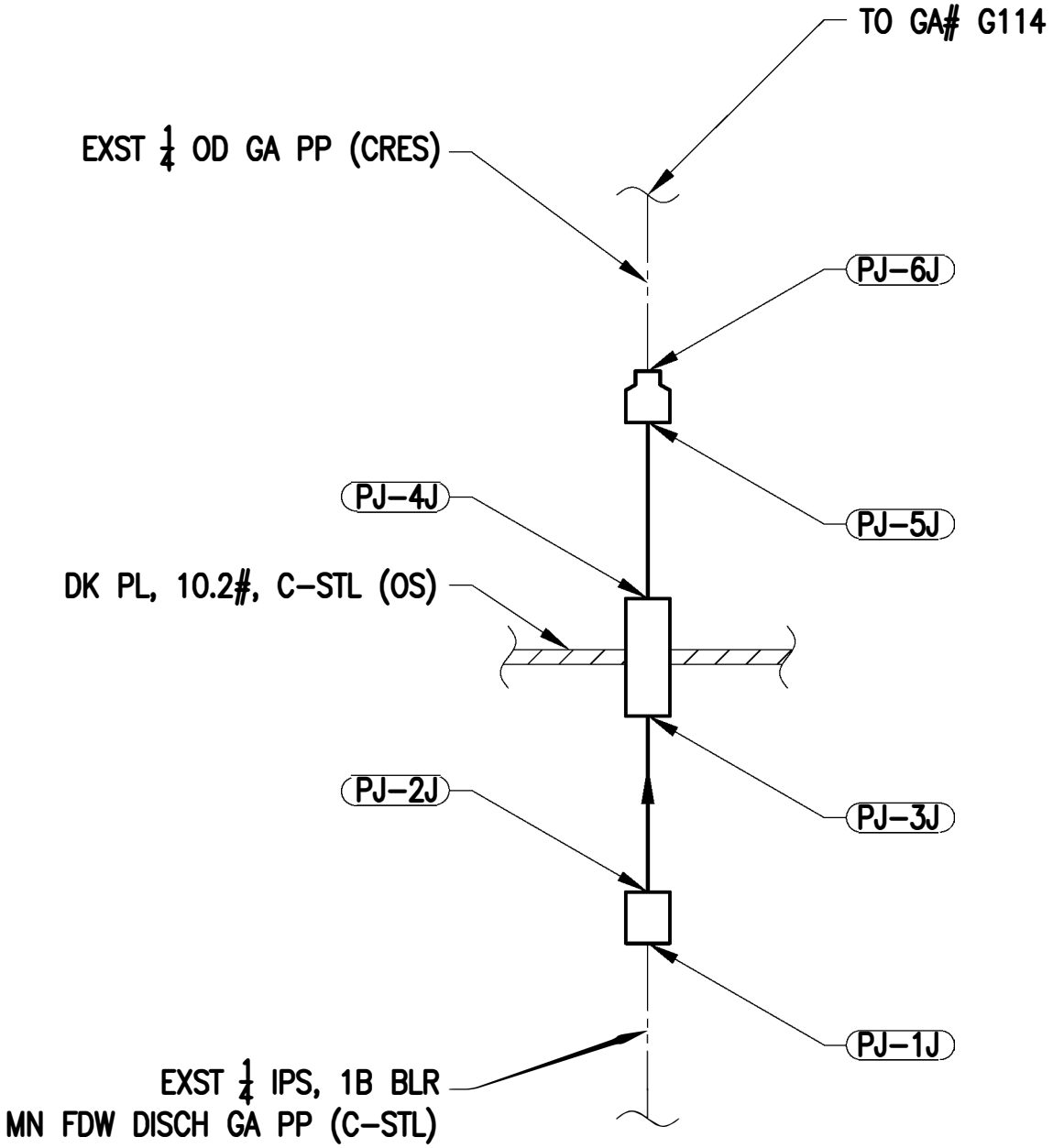

MAPPING PLAN

WELDING IN PROCESS CONTROL/NONDESTRUCTIVE TEST RECORD
QA FORM 20 (FRONT)
When the form is used for production welding, the blocks marked with a ◆ must be completed by the planner.

◆1. PAGE 1 OF 2

◆2. SHIP USS BLUE RIDGE HULL NO. LCC19	◆3. JCN EM01-L261	◆4. CWP/REC SER. NO. N/A	◆5. LWC KTR	◆6. DATE 5 Apr 2025
◆7. SYSTEM Main Steam System	◆8. COMPONENT Main Steam Gage Piping	◆9. DWG NO. Mapping Plan Enclosure-02	◆10. CWP STEP NO. 5.6.2.3	
◆11. JOINT ID PJ-1	◆12. JOINT DESIGN P-14	13. INST LOCATION: [ ] STBD COMPT: [ ] C/L FR: [ ] PORT	14. WELDED LOCATION: [ ] SHOP [ ] FIELD	

BASE MATERIAL DATA

15. COMP DATA	16. MATERIAL	17. SIZE	18. THICKNESS	19. MATL SPEC	20. MIC NO.
COMPONENT A:					
COMPONENT B:					
21. [ ] SEAL RING [ ] BACK RING/STRIP	22. MATERIAL	23. SIZE	24. THICKNESS	25. MATL SPEC	26. MIC NO.

WELDING MATERIAL SPECIFICATIONS AND DATA

27. TYPE OF FILLER(S)	28. SIZE	29. MATL	30. MIL-SPEC	31. MIC NO.

WELD HISTORY

◆32. WELDING STANDARD: S9074-AR-GIB-010A/278	33. WELDING PROCEDURE:	34. DATA SHEET	35. POSITION: [ ] VERT [ ] FLAT [ ] FIXED [ ] 45 DEG [ ] HORZ [ ] OVHD [ ] ROLLED	
36. ACCESSIBILITY: [ ] 12"OR LESS [ ] UNRESTRICTED	37. PREHEAT TEMP	38. PREHEAT METHOD	39. POST HEAT. TEMP REQD: START TIME: STOP TIME:	
40. PURGE GAS:	41. FLOW RATE	42. SHIELD GAS	43. FLOW RATE	44. CUP SIZE / 45. TUNGSTEN SIZE

46. WELD LAYER	47. PROCESS	48. QUAL EXP DATE	49. AMPS	50. INTERPASS TEMP	51. WELDER SIGNATURE	52. DATE

53. INSPECTION DATA CONTAINED ON REVERSE OF THIS PAGE
REMARKS:

94. FINAL DISPOSITION: [ ] ACCEPT [ ] REJECT	95. NDT SUPERVISOR DATE

THE PERSON DESIGNATED TO SIGN FOR AN ACTION VERIFIES, BASED ON PERSONAL OBSERVATION OR CERTIFIED RECORDS, AND CERTIFIES BY THEIR SIGNATURE THAT THE ACTION HAS BEEN PERFORMED IN ACCORDANCE WITH THE SPECIFIED REQUIREMENTS.

WELDING IN PROCESS CONTROL/NONDESTRUCTIVE TEST RECORD
QA FORM 20 (BACK)

NDT INSPECTION DATA

54. INSPECTION STANDARD	55. WELD CLASS	56. ACCEPTANCE STANDARD	57. ACCEPT CLASS

58. WELD PREP	59. INSP METHOD	60. ACCEPT/REJECT	61. NDT INSPECTOR SIGNATURE	62. DATE
COMPONENT A		[ ] ACCEPT [ ] REJECT		
COMPONENT B		[ ] ACCEPT [ ] REJECT		
63. JOINT FITUP		[ ] ACCEPT [ ] REJECT		

64. INSP LAYER	65. INSP METHOD	66. INSP PROC NO	67. ACCEPT/REJECT	68. NDT INSPECTOR SIGNATURE	69. DATE
			[ ] ACCEPT [ ] REJECT		
			[ ] ACCEPT [ ] REJECT		
			[ ] ACCEPT [ ] REJECT		
			[ ] ACCEPT [ ] REJECT		
			[ ] ACCEPT [ ] REJECT		

70. NDT INSPECTION DATA REPAIR NO._____ Defect: L W D

71. Repair Method: Excavation: L W D

72. INSP LAYER	73. INSP METHOD	74. INSP PROC NO.	75. ACCEPT/REJECT	76. NDT INSPECTOR SIGNATURE	77. DATE
			[ ] ACCEPT [ ] REJECT		
			[ ] ACCEPT [ ] REJECT		

78. NDT INSPECTION DATA REPAIR NO._____ Defect: L W D

79. Repair Method: Excavation: L W D

80. INSP LAYER	81. INSP METHOD	82. INSP PROC NO.	83. ACCEPT/REJECT	84. NDT INSPECTOR SIGNATURE	85. DATE
			[ ] ACCEPT [ ] REJECT		
			[ ] ACCEPT [ ] REJECT		

86. NDT INSPECTION DATA REPAIR NO._____ Defect: L W D

87. Repair Method: Excavation: L W D

88. INSP LAYER	89. INSP METHOD	90. INSP PROC NO.	91. ACCEPT/REJECT	92. NDT INSPECTOR SIGNATURE	93. DATE
			[ ] ACCEPT [ ] REJECT		
			[ ] ACCEPT [ ] REJECT		

53. REMARKS (Continued):

THE PERSON DESIGNATED TO SIGN FOR AN ACTION VERIFIES, BASED ON PERSONAL OBSERVATION OR CERTIFIED RECORDS, AND CERTIFIES BY THEIR SIGNATURE THAT THE ACTION HAS BEEN PERFORMED IN ACCORDANCE WITH THE SPECIFIED REQUIREMENTS.

WELDING IN PROCESS CONTROL/NONDESTRUCTIVE TEST RECORD
QA FORM 20 (FRONT)
When the form is used for production welding, the blocks marked with a ◆ must be completed by the planner.

◆1. PAGE 1 OF 2

◆2. SHIP USS BLUE RIDGE HULL NO. LCC19	◆3. JCN EM01-L261	◆4. CWP/REC SER. NO. N/A	◆5. LWC KTR	◆6. DATE 5 Apr 2025
◆7. SYSTEM Main Steam System	◆8. COMPONENT Main Steam Gage Piping	◆9. DWG NO. Mapping Plan Enclosure-02	◆10. CWP STEP NO. 5.6.2.3	
◆11. JOINT ID PJ-2	◆12. JOINT DESIGN P-14	13. INST LOCATION: [ ] STBD COMPT: [ ] C/L FR: [ ] PORT	14. WELDED LOCATION: [ ] SHOP [ ] FIELD	

BASE MATERIAL DATA

15. COMP DATA	16. MATERIAL	17. SIZE	18. THICKNESS	19. MATL SPEC	20. MIC NO.
COMPONENT A:					
COMPONENT B:					
21. [ ] SEAL RING [ ] BACK RING/STRIP	22. MATERIAL	23. SIZE	24. THICKNESS	25. MATL SPEC	26. MIC NO.

WELDING MATERIAL SPECIFICATIONS AND DATA

27. TYPE OF FILLER(S)	28. SIZE	29. MATL	30. MIL-SPEC	31. MIC NO.

WELD HISTORY

◆32. WELDING STANDARD: S9074-AR-GIB-010A/278	33. WELDING PROCEDURE:	34. DATA SHEET	35. POSITION: [ ] VERT [ ] FLAT [ ] FIXED [ ] 45 DEG [ ] HORZ [ ] OVHD [ ] ROLLED	
36. ACCESSIBILITY: [ ] 12"OR LESS [ ] UNRESTRICTED	37. PREHEAT TEMP	38. PREHEAT METHOD	39. POST HEAT. TEMP REQD: START TIME: STOP TIME:	
40. PURGE GAS:	41. FLOW RATE	42. SHIELD GAS	43. FLOW RATE	44. CUP SIZE / 45. TUNGSTEN SIZE

46. WELD LAYER	47. PROCESS	48. QUAL EXP DATE	49. AMPS	50. INTERPASS TEMP	51. WELDER SIGNATURE	52. DATE

53. INSPECTION DATA CONTAINED ON REVERSE OF THIS PAGE
REMARKS:

94. FINAL DISPOSITION: [ ] ACCEPT [ ] REJECT	95. NDT SUPERVISOR DATE

THE PERSON DESIGNATED TO SIGN FOR AN ACTION VERIFIES, BASED ON PERSONAL OBSERVATION OR CERTIFIED RECORDS, AND CERTIFIES BY THEIR SIGNATURE THAT THE ACTION HAS BEEN PERFORMED IN ACCORDANCE WITH THE SPECIFIED REQUIREMENTS.

WELDING IN PROCESS CONTROL/NONDESTRUCTIVE TEST RECORD
QA FORM 20 (BACK)

NDT INSPECTION DATA

54. INSPECTION STANDARD	55. WELD CLASS	56. ACCEPTANCE STANDARD	57. ACCEPT CLASS

58. WELD PREP	59. INSP METHOD	60. ACCEPT/REJECT	61. NDT INSPECTOR SIGNATURE	62. DATE
COMPONENT A		[ ] ACCEPT [ ] REJECT		
COMPONENT B		[ ] ACCEPT [ ] REJECT		
63. JOINT FITUP		[ ] ACCEPT [ ] REJECT		

64. INSP LAYER	65. INSP METHOD	66. INSP PROC NO	67. ACCEPT/REJECT	68. NDT INSPECTOR SIGNATURE	69. DATE
			[ ] ACCEPT [ ] REJECT		
			[ ] ACCEPT [ ] REJECT		
			[ ] ACCEPT [ ] REJECT		
			[ ] ACCEPT [ ] REJECT		
			[ ] ACCEPT [ ] REJECT		

70. NDT INSPECTION DATA REPAIR NO._____ Defect: L W D

71. Repair Method: Excavation: L W D

72. INSP LAYER	73. INSP METHOD	74. INSP PROC NO.	75. ACCEPT/REJECT	76. NDT INSPECTOR SIGNATURE	77. DATE
			[ ] ACCEPT [ ] REJECT		
			[ ] ACCEPT [ ] REJECT		

78. NDT INSPECTION DATA REPAIR NO._____ Defect: L W D

79. Repair Method: Excavation: L W D

80. INSP LAYER	81. INSP METHOD	82. INSP PROC NO.	83. ACCEPT/REJECT	84. NDT INSPECTOR SIGNATURE	85. DATE
			[ ] ACCEPT [ ] REJECT		
			[ ] ACCEPT [ ] REJECT		

86. NDT INSPECTION DATA REPAIR NO._____ Defect: L W D

87. Repair Method: Excavation: L W D

88. INSP LAYER	89. INSP METHOD	90. INSP PROC NO.	91. ACCEPT/REJECT	92. NDT INSPECTOR SIGNATURE	93. DATE
			[ ] ACCEPT [ ] REJECT		
			[ ] ACCEPT [ ] REJECT		

53. REMARKS (Continued):

THE PERSON DESIGNATED TO SIGN FOR AN ACTION VERIFIES, BASED ON PERSONAL OBSERVATION OR CERTIFIED RECORDS, AND CERTIFIES BY THEIR SIGNATURE THAT THE ACTION HAS BEEN PERFORMED IN ACCORDANCE WITH THE SPECIFIED REQUIREMENTS.

WELDING IN PROCESS CONTROL/NONDESTRUCTIVE TEST RECORD
QA FORM 20 (FRONT)
When the form is used for production welding, the blocks marked with a ◆ must be completed by the planner.

◆1. PAGE 1 OF 2

◆2. SHIP USS BLUE RIDGE HULL NO. LCC19	◆3. JCN EM01-L261	◆4. CWP/REC SER. NO. N/A	◆5. LWC KTR	◆6. DATE 5 Apr 2025
◆7. SYSTEM Main Steam System	◆8. COMPONENT Main Steam Gage Piping	◆9. DWG NO. Mapping Plan Enclosure-02	◆10. CWP STEP NO. 5.6.2.3	
◆11. JOINT ID PJ-3	◆12. JOINT DESIGN P-17	13. INST LOCATION: [ ] STBD COMPT: [ ] C/L FR: [ ] PORT	14. WELDED LOCATION: [ ] SHOP [ ] FIELD	

BASE MATERIAL DATA

15. COMP DATA	16. MATERIAL	17. SIZE	18. THICKNESS	19. MATL SPEC	20. MIC NO.
COMPONENT A:					
COMPONENT B:					
21. [ ] SEAL RING [ ] BACK RING/STRIP	22. MATERIAL	23. SIZE	24. THICKNESS	25. MATL SPEC	26. MIC NO.

WELDING MATERIAL SPECIFICATIONS AND DATA

27. TYPE OF FILLER(S)	28. SIZE	29. MATL	30. MIL-SPEC	31. MIC NO.

WELD HISTORY

◆32. WELDING STANDARD: S9074-AR-GIB-010A/278	33. WELDING PROCEDURE:	34. DATA SHEET	35. POSITION: [ ] VERT [ ] FLAT [ ] FIXED [ ] 45 DEG [ ] HORZ [ ] OVHD [ ] ROLLED	
36. ACCESSIBILITY: [ ] 12"OR LESS [ ] UNRESTRICTED	37. PREHEAT TEMP	38. PREHEAT METHOD	39. POST HEAT. TEMP REQD: START TIME: STOP TIME:	
40. PURGE GAS:	41. FLOW RATE	42. SHIELD GAS	43. FLOW RATE	44. CUP SIZE / 45. TUNGSTEN SIZE

46. WELD LAYER	47. PROCESS	48. QUAL EXP DATE	49. AMPS	50. INTERPASS TEMP	51. WELDER SIGNATURE	52. DATE

53. INSPECTION DATA CONTAINED ON REVERSE OF THIS PAGE
REMARKS:

94. FINAL DISPOSITION: [ ] ACCEPT [ ] REJECT	95. NDT SUPERVISOR DATE

THE PERSON DESIGNATED TO SIGN FOR AN ACTION VERIFIES, BASED ON PERSONAL OBSERVATION OR CERTIFIED RECORDS, AND CERTIFIES BY THEIR SIGNATURE THAT THE ACTION HAS BEEN PERFORMED IN ACCORDANCE WITH THE SPECIFIED REQUIREMENTS.

WELDING IN PROCESS CONTROL/NONDESTRUCTIVE TEST RECORD
QA FORM 20 (BACK)

NDT INSPECTION DATA

54. INSPECTION STANDARD	55. WELD CLASS	56. ACCEPTANCE STANDARD	57. ACCEPT CLASS

58. WELD PREP	59. INSP METHOD	60. ACCEPT/REJECT	61. NDT INSPECTOR SIGNATURE	62. DATE
COMPONENT A		[ ] ACCEPT [ ] REJECT		
COMPONENT B		[ ] ACCEPT [ ] REJECT		
63. JOINT FITUP		[ ] ACCEPT [ ] REJECT		

64. INSP LAYER	65. INSP METHOD	66. INSP PROC NO	67. ACCEPT/REJECT	68. NDT INSPECTOR SIGNATURE	69. DATE
			[ ] ACCEPT [ ] REJECT		
			[ ] ACCEPT [ ] REJECT		
			[ ] ACCEPT [ ] REJECT		
			[ ] ACCEPT [ ] REJECT		
			[ ] ACCEPT [ ] REJECT		

70. NDT INSPECTION DATA REPAIR NO._____ Defect: L W D

71. Repair Method: Excavation: L W D

72. INSP LAYER	73. INSP METHOD	74. INSP PROC NO.	75. ACCEPT/REJECT	76. NDT INSPECTOR SIGNATURE	77. DATE
			[ ] ACCEPT [ ] REJECT		
			[ ] ACCEPT [ ] REJECT		

78. NDT INSPECTION DATA REPAIR NO._____ Defect: L W D

79. Repair Method: Excavation: L W D

80. INSP LAYER	81. INSP METHOD	82. INSP PROC NO.	83. ACCEPT/REJECT	84. NDT INSPECTOR SIGNATURE	85. DATE
			[ ] ACCEPT [ ] REJECT		
			[ ] ACCEPT [ ] REJECT		

86. NDT INSPECTION DATA REPAIR NO._____ Defect: L W D

87. Repair Method: Excavation: L W D

88. INSP LAYER	89. INSP METHOD	90. INSP PROC NO.	91. ACCEPT/REJECT	92. NDT INSPECTOR SIGNATURE	93. DATE
			[ ] ACCEPT [ ] REJECT		
			[ ] ACCEPT [ ] REJECT		

53. REMARKS (Continued):

THE PERSON DESIGNATED TO SIGN FOR AN ACTION VERIFIES, BASED ON PERSONAL OBSERVATION OR CERTIFIED RECORDS, AND CERTIFIES BY THEIR SIGNATURE THAT THE ACTION HAS BEEN PERFORMED IN ACCORDANCE WITH THE SPECIFIED REQUIREMENTS.

WELDING IN PROCESS CONTROL/NONDESTRUCTIVE TEST RECORD
QA FORM 20 (FRONT)
When the form is used for production welding, the blocks marked with a ◆ must be completed by the planner.

◆1. PAGE 1 OF 2

◆2. SHIP USS BLUE RIDGE HULL NO. LCC19	◆3. JCN EM01-L261	◆4. CWP/REC SER. NO. N/A	◆5. LWC KTR	◆6. DATE 5 Apr 2025
◆7. SYSTEM Main Steam System	◆8. COMPONENT Main Steam Gage Piping	◆9. DWG NO. Mapping Plan Enclosure-02	◆10. CWP STEP NO. 5.6.2.3	
◆11. JOINT ID PJ-4	◆12. JOINT DESIGN P-17	13. INST LOCATION: [ ] STBD COMPT: [ ] C/L FR: [ ] PORT	14. WELDED LOCATION: [ ] SHOP [ ] FIELD	

BASE MATERIAL DATA

15. COMP DATA	16. MATERIAL	17. SIZE	18. THICKNESS	19. MATL SPEC	20. MIC NO.
COMPONENT A:					
COMPONENT B:					
21. [ ] SEAL RING [ ] BACK RING/STRIP	22. MATERIAL	23. SIZE	24. THICKNESS	25. MATL SPEC	26. MIC NO.

WELDING MATERIAL SPECIFICATIONS AND DATA

27. TYPE OF FILLER(S)	28. SIZE	29. MATL	30. MIL-SPEC	31. MIC NO.

WELD HISTORY

◆32. WELDING STANDARD: S9074-AR-GIB-010A/278	33. WELDING PROCEDURE:	34. DATA SHEET	35. POSITION: [ ] VERT [ ] FLAT [ ] FIXED [ ] 45 DEG [ ] HORZ [ ] OVHD [ ] ROLLED	
36. ACCESSIBILITY: [ ] 12"OR LESS [ ] UNRESTRICTED	37. PREHEAT TEMP	38. PREHEAT METHOD	39. POST HEAT. TEMP REQD: START TIME: STOP TIME:	
40. PURGE GAS:	41. FLOW RATE	42. SHIELD GAS	43. FLOW RATE	44. CUP SIZE / 45. TUNGSTEN SIZE

46. WELD LAYER	47. PROCESS	48. QUAL EXP DATE	49. AMPS	50. INTERPASS TEMP	51. WELDER SIGNATURE	52. DATE

53. INSPECTION DATA CONTAINED ON REVERSE OF THIS PAGE
REMARKS:

94. FINAL DISPOSITION: [ ] ACCEPT [ ] REJECT	95. NDT SUPERVISOR DATE

THE PERSON DESIGNATED TO SIGN FOR AN ACTION VERIFIES, BASED ON PERSONAL OBSERVATION OR CERTIFIED RECORDS, AND CERTIFIES BY THEIR SIGNATURE THAT THE ACTION HAS BEEN PERFORMED IN ACCORDANCE WITH THE SPECIFIED REQUIREMENTS.

WELDING IN PROCESS CONTROL/NONDESTRUCTIVE TEST RECORD
QA FORM 20 (BACK)

NDT INSPECTION DATA

54. INSPECTION STANDARD	55. WELD CLASS	56. ACCEPTANCE STANDARD	57. ACCEPT CLASS

58. WELD PREP	59. INSP METHOD	60. ACCEPT/REJECT	61. NDT INSPECTOR SIGNATURE	62. DATE
COMPONENT A		[ ] ACCEPT [ ] REJECT		
COMPONENT B		[ ] ACCEPT [ ] REJECT		
63. JOINT FITUP		[ ] ACCEPT [ ] REJECT		

64. INSP LAYER	65. INSP METHOD	66. INSP PROC NO	67. ACCEPT/REJECT	68. NDT INSPECTOR SIGNATURE	69. DATE
			[ ] ACCEPT [ ] REJECT		
			[ ] ACCEPT [ ] REJECT		
			[ ] ACCEPT [ ] REJECT		
			[ ] ACCEPT [ ] REJECT		
			[ ] ACCEPT [ ] REJECT		

70. NDT INSPECTION DATA REPAIR NO._____ Defect: L W D

71. Repair Method: Excavation: L W D

72. INSP LAYER	73. INSP METHOD	74. INSP PROC NO.	75. ACCEPT/REJECT	76. NDT INSPECTOR SIGNATURE	77. DATE
			[ ] ACCEPT [ ] REJECT		
			[ ] ACCEPT [ ] REJECT		

78. NDT INSPECTION DATA REPAIR NO._____ Defect: L W D

79. Repair Method: Excavation: L W D

80. INSP LAYER	81. INSP METHOD	82. INSP PROC NO.	83. ACCEPT/REJECT	84. NDT INSPECTOR SIGNATURE	85. DATE
			[ ] ACCEPT [ ] REJECT		
			[ ] ACCEPT [ ] REJECT		

86. NDT INSPECTION DATA REPAIR NO._____ Defect: L W D

87. Repair Method: Excavation: L W D

88. INSP LAYER	89. INSP METHOD	90. INSP PROC NO.	91. ACCEPT/REJECT	92. NDT INSPECTOR SIGNATURE	93. DATE
			[ ] ACCEPT [ ] REJECT		
			[ ] ACCEPT [ ] REJECT		

53. REMARKS (Continued):

THE PERSON DESIGNATED TO SIGN FOR AN ACTION VERIFIES, BASED ON PERSONAL OBSERVATION OR CERTIFIED RECORDS, AND CERTIFIES BY THEIR SIGNATURE THAT THE ACTION HAS BEEN PERFORMED IN ACCORDANCE WITH THE SPECIFIED REQUIREMENTS.

WELDING IN PROCESS CONTROL/NONDESTRUCTIVE TEST RECORD
QA FORM 20 (FRONT)
When the form is used for production welding, the blocks marked with a ◆ must be completed by the planner.

◆1. PAGE 1 OF 2

◆2. SHIP USS BLUE RIDGE HULL NO. LCC19	◆3. JCN EM01-L261	◆4. CWP/REC SER. NO. N/A	◆5. LWC KTR	◆6. DATE 5 Apr 2025
◆7. SYSTEM Main Steam System	◆8. COMPONENT Main Steam Gage Piping	◆9. DWG NO. Mapping Plan Enclosure-02	◆10. CWP STEP NO. 5.6.2.3	
◆11. JOINT ID PJ-5	◆12. JOINT DESIGN P-14	13. INST LOCATION: [ ] STBD COMPT: [ ] C/L FR: [ ] PORT	14. WELDED LOCATION: [ ] SHOP [ ] FIELD	

BASE MATERIAL DATA

15. COMP DATA	16. MATERIAL	17. SIZE	18. THICKNESS	19. MATL SPEC	20. MIC NO.
COMPONENT A:					
COMPONENT B:					
21. [ ] SEAL RING [ ] BACK RING/STRIP	22. MATERIAL	23. SIZE	24. THICKNESS	25. MATL SPEC	26. MIC NO.

WELDING MATERIAL SPECIFICATIONS AND DATA

27. TYPE OF FILLER(S)	28. SIZE	29. MATL	30. MIL-SPEC	31. MIC NO.

WELD HISTORY

◆32. WELDING STANDARD: S9074-AR-GIB-010A/278	33. WELDING PROCEDURE:	34. DATA SHEET	35. POSITION: [ ] VERT [ ] FLAT [ ] FIXED [ ] 45 DEG [ ] HORZ [ ] OVHD [ ] ROLLED	
36. ACCESSIBILITY: [ ] 12"OR LESS [ ] UNRESTRICTED	37. PREHEAT TEMP	38. PREHEAT METHOD	39. POST HEAT. TEMP REQD: START TIME: STOP TIME:	
40. PURGE GAS:	41. FLOW RATE	42. SHIELD GAS	43. FLOW RATE	44. CUP SIZE / 45. TUNGSTEN SIZE

46. WELD LAYER	47. PROCESS	48. QUAL EXP DATE	49. AMPS	50. INTERPASS TEMP	51. WELDER SIGNATURE	52. DATE

53. INSPECTION DATA CONTAINED ON REVERSE OF THIS PAGE
REMARKS:

94. FINAL DISPOSITION: [ ] ACCEPT [ ] REJECT	95. NDT SUPERVISOR DATE

THE PERSON DESIGNATED TO SIGN FOR AN ACTION VERIFIES, BASED ON PERSONAL OBSERVATION OR CERTIFIED RECORDS, AND CERTIFIES BY THEIR SIGNATURE THAT THE ACTION HAS BEEN PERFORMED IN ACCORDANCE WITH THE SPECIFIED REQUIREMENTS.

WELDING IN PROCESS CONTROL/NONDESTRUCTIVE TEST RECORD
QA FORM 20 (BACK)

NDT INSPECTION DATA

54. INSPECTION STANDARD	55. WELD CLASS	56. ACCEPTANCE STANDARD	57. ACCEPT CLASS

58. WELD PREP	59. INSP METHOD	60. ACCEPT/REJECT	61. NDT INSPECTOR SIGNATURE	62. DATE
COMPONENT A		[ ] ACCEPT [ ] REJECT		
COMPONENT B		[ ] ACCEPT [ ] REJECT		
63. JOINT FITUP		[ ] ACCEPT [ ] REJECT		

64. INSP LAYER	65. INSP METHOD	66. INSP PROC NO	67. ACCEPT/REJECT	68. NDT INSPECTOR SIGNATURE	69. DATE
			[ ] ACCEPT [ ] REJECT		
			[ ] ACCEPT [ ] REJECT		
			[ ] ACCEPT [ ] REJECT		
			[ ] ACCEPT [ ] REJECT		
			[ ] ACCEPT [ ] REJECT		

70. NDT INSPECTION DATA REPAIR NO._____ Defect: L W D

71. Repair Method: Excavation: L W D

72. INSP LAYER	73. INSP METHOD	74. INSP PROC NO.	75. ACCEPT/REJECT	76. NDT INSPECTOR SIGNATURE	77. DATE
			[ ] ACCEPT [ ] REJECT		
			[ ] ACCEPT [ ] REJECT		

78. NDT INSPECTION DATA REPAIR NO._____ Defect: L W D

79. Repair Method: Excavation: L W D

80. INSP LAYER	81. INSP METHOD	82. INSP PROC NO.	83. ACCEPT/REJECT	84. NDT INSPECTOR SIGNATURE	85. DATE
			[ ] ACCEPT [ ] REJECT		
			[ ] ACCEPT [ ] REJECT		

86. NDT INSPECTION DATA REPAIR NO._____ Defect: L W D

87. Repair Method: Excavation: L W D

88. INSP LAYER	89. INSP METHOD	90. INSP PROC NO.	91. ACCEPT/REJECT	92. NDT INSPECTOR SIGNATURE	93. DATE
			[ ] ACCEPT [ ] REJECT		
			[ ] ACCEPT [ ] REJECT		

53. REMARKS (Continued):

THE PERSON DESIGNATED TO SIGN FOR AN ACTION VERIFIES, BASED ON PERSONAL OBSERVATION OR CERTIFIED RECORDS, AND CERTIFIES BY THEIR SIGNATURE THAT THE ACTION HAS BEEN PERFORMED IN ACCORDANCE WITH THE SPECIFIED REQUIREMENTS.

WELDING IN PROCESS CONTROL/NONDESTRUCTIVE TEST RECORD
QA FORM 20 (FRONT)
When the form is used for production welding, the blocks marked with a ◆ must be completed by the planner.

◆1. PAGE 1 OF 2

◆2. SHIP USS BLUE RIDGE HULL NO. LCC19	◆3. JCN EM01-L261	◆4. CWP/REC SER. NO. N/A	◆5. LWC KTR	◆6. DATE 5 Apr 2025
◆7. SYSTEM Main Steam System	◆8. COMPONENT Main Steam Gage Piping	◆9. DWG NO. Mapping Plan Enclosure-02	◆10. CWP STEP NO. 5.6.2.3	
◆11. JOINT ID PJ-6	◆12. JOINT DESIGN P-14	13. INST LOCATION: [ ] STBD COMPT: [ ] C/L FR: [ ] PORT	14. WELDED LOCATION: [ ] SHOP [ ] FIELD	

BASE MATERIAL DATA

15. COMP DATA	16. MATERIAL	17. SIZE	18. THICKNESS	19. MATL SPEC	20. MIC NO.
COMPONENT A:					
COMPONENT B:					
21. [ ] SEAL RING [ ] BACK RING/STRIP	22. MATERIAL	23. SIZE	24. THICKNESS	25. MATL SPEC	26. MIC NO.

WELDING MATERIAL SPECIFICATIONS AND DATA

27. TYPE OF FILLER(S)	28. SIZE	29. MATL	30. MIL-SPEC	31. MIC NO.

WELD HISTORY

◆32. WELDING STANDARD: S9074-AR-GIB-010A/278	33. WELDING PROCEDURE:	34. DATA SHEET	35. POSITION: [ ] VERT [ ] FLAT [ ] FIXED [ ] 45 DEG [ ] HORZ [ ] OVHD [ ] ROLLED	
36. ACCESSIBILITY: [ ] 12"OR LESS [ ] UNRESTRICTED	37. PREHEAT TEMP	38. PREHEAT METHOD	39. POST HEAT. TEMP REQD: START TIME: STOP TIME:	
40. PURGE GAS:	41. FLOW RATE	42. SHIELD GAS	43. FLOW RATE	44. CUP SIZE / 45. TUNGSTEN SIZE

46. WELD LAYER	47. PROCESS	48. QUAL EXP DATE	49. AMPS	50. INTERPASS TEMP	51. WELDER SIGNATURE	52. DATE

53. INSPECTION DATA CONTAINED ON REVERSE OF THIS PAGE
REMARKS:

94. FINAL DISPOSITION: [ ] ACCEPT [ ] REJECT	95. NDT SUPERVISOR DATE

THE PERSON DESIGNATED TO SIGN FOR AN ACTION VERIFIES, BASED ON PERSONAL OBSERVATION OR CERTIFIED RECORDS, AND CERTIFIES BY THEIR SIGNATURE THAT THE ACTION HAS BEEN PERFORMED IN ACCORDANCE WITH THE SPECIFIED REQUIREMENTS.

WELDING IN PROCESS CONTROL/NONDESTRUCTIVE TEST RECORD
QA FORM 20 (BACK)

NDT INSPECTION DATA

54. INSPECTION STANDARD	55. WELD CLASS	56. ACCEPTANCE STANDARD	57. ACCEPT CLASS

58. WELD PREP	59. INSP METHOD	60. ACCEPT/REJECT	61. NDT INSPECTOR SIGNATURE	62. DATE
COMPONENT A		[ ] ACCEPT [ ] REJECT		
COMPONENT B		[ ] ACCEPT [ ] REJECT		
63. JOINT FITUP		[ ] ACCEPT [ ] REJECT		

64. INSP LAYER	65. INSP METHOD	66. INSP PROC NO	67. ACCEPT/REJECT	68. NDT INSPECTOR SIGNATURE	69. DATE
			[ ] ACCEPT [ ] REJECT		
			[ ] ACCEPT [ ] REJECT		
			[ ] ACCEPT [ ] REJECT		
			[ ] ACCEPT [ ] REJECT		
			[ ] ACCEPT [ ] REJECT		

70. NDT INSPECTION DATA REPAIR NO._____ Defect: L W D

71. Repair Method: Excavation: L W D

72. INSP LAYER	73. INSP METHOD	74. INSP PROC NO.	75. ACCEPT/REJECT	76. NDT INSPECTOR SIGNATURE	77. DATE
			[ ] ACCEPT [ ] REJECT		
			[ ] ACCEPT [ ] REJECT		

78. NDT INSPECTION DATA REPAIR NO._____ Defect: L W D

79. Repair Method: Excavation: L W D

80. INSP LAYER	81. INSP METHOD	82. INSP PROC NO.	83. ACCEPT/REJECT	84. NDT INSPECTOR SIGNATURE	85. DATE
			[ ] ACCEPT [ ] REJECT		
			[ ] ACCEPT [ ] REJECT		

86. NDT INSPECTION DATA REPAIR NO._____ Defect: L W D

87. Repair Method: Excavation: L W D

88. INSP LAYER	89. INSP METHOD	90. INSP PROC NO.	91. ACCEPT/REJECT	92. NDT INSPECTOR SIGNATURE	93. DATE
			[ ] ACCEPT [ ] REJECT		
			[ ] ACCEPT [ ] REJECT		

53. REMARKS (Continued):

THE PERSON DESIGNATED TO SIGN FOR AN ACTION VERIFIES, BASED ON PERSONAL OBSERVATION OR CERTIFIED RECORDS, AND CERTIFIES BY THEIR SIGNATURE THAT THE ACTION HAS BEEN PERFORMED IN ACCORDANCE WITH THE SPECIFIED REQUIREMENTS.

WELDING IN PROCESS CONTROL/NONDESTRUCTIVE TEST RECORD
QA FORM 20 (FRONT)
When the form is used for production welding, the blocks marked with a ◆ must be completed by the planner.

◆1. PAGE 1 OF 2

◆2. SHIP USS BLUE RIDGE HULL NO. LCC19	◆3. JCN EM01-L261	◆4. CWP/REC SER. NO. N/A	◆5. LWC KTR	◆6. DATE 5 Apr 2025
◆7. SYSTEM Main Steam System	◆8. COMPONENT Astern Steam Inlet Gage Piping	◆9. DWG NO. Mapping Plan Enclosure-02	◆10. CWP STEP NO. 5.6.2.3	
◆11. JOINT ID PJ-1A	◆12. JOINT DESIGN P-14	13. INST LOCATION: [ ] STBD COMPT: [ ] C/L FR: [ ] PORT	14. WELDED LOCATION: [ ] SHOP [ ] FIELD	

BASE MATERIAL DATA

15. COMP DATA	16. MATERIAL	17. SIZE	18. THICKNESS	19. MATL SPEC	20. MIC NO.
COMPONENT A:					
COMPONENT B:					
21. [ ] SEAL RING [ ] BACK RING/STRIP	22. MATERIAL	23. SIZE	24. THICKNESS	25. MATL SPEC	26. MIC NO.

WELDING MATERIAL SPECIFICATIONS AND DATA

27. TYPE OF FILLER(S)	28. SIZE	29. MATL	30. MIL-SPEC	31. MIC NO.

WELD HISTORY

◆32. WELDING STANDARD: S9074-AR-GIB-010A/278	33. WELDING PROCEDURE:	34. DATA SHEET	35. POSITION: [ ] VERT [ ] FLAT [ ] FIXED [ ] 45 DEG [ ] HORZ [ ] OVHD [ ] ROLLED	
36. ACCESSIBILITY: [ ] 12"OR LESS [ ] UNRESTRICTED	37. PREHEAT TEMP	38. PREHEAT METHOD	39. POST HEAT. TEMP REQD: START TIME: STOP TIME:	
40. PURGE GAS:	41. FLOW RATE	42. SHIELD GAS	43. FLOW RATE	44. CUP SIZE / 45. TUNGSTEN SIZE

46. WELD LAYER	47. PROCESS	48. QUAL EXP DATE	49. AMPS	50. INTERPASS TEMP	51. WELDER SIGNATURE	52. DATE

53. INSPECTION DATA CONTAINED ON REVERSE OF THIS PAGE
REMARKS:

94. FINAL DISPOSITION: [ ] ACCEPT [ ] REJECT	95. NDT SUPERVISOR DATE

THE PERSON DESIGNATED TO SIGN FOR AN ACTION VERIFIES, BASED ON PERSONAL OBSERVATION OR CERTIFIED RECORDS, AND CERTIFIES BY THEIR SIGNATURE THAT THE ACTION HAS BEEN PERFORMED IN ACCORDANCE WITH THE SPECIFIED REQUIREMENTS.

WELDING IN PROCESS CONTROL/NONDESTRUCTIVE TEST RECORD
QA FORM 20 (BACK)

NDT INSPECTION DATA

54. INSPECTION STANDARD	55. WELD CLASS	56. ACCEPTANCE STANDARD	57. ACCEPT CLASS

58. WELD PREP	59. INSP METHOD	60. ACCEPT/REJECT	61. NDT INSPECTOR SIGNATURE	62. DATE
COMPONENT A		[ ] ACCEPT [ ] REJECT		
COMPONENT B		[ ] ACCEPT [ ] REJECT		
63. JOINT FITUP		[ ] ACCEPT [ ] REJECT		

64. INSP LAYER	65. INSP METHOD	66. INSP PROC NO	67. ACCEPT/REJECT	68. NDT INSPECTOR SIGNATURE	69. DATE
			[ ] ACCEPT [ ] REJECT		
			[ ] ACCEPT [ ] REJECT		
			[ ] ACCEPT [ ] REJECT		
			[ ] ACCEPT [ ] REJECT		
			[ ] ACCEPT [ ] REJECT		

70. NDT INSPECTION DATA REPAIR NO._____ Defect: L W D

71. Repair Method: Excavation: L W D

72. INSP LAYER	73. INSP METHOD	74. INSP PROC NO.	75. ACCEPT/REJECT	76. NDT INSPECTOR SIGNATURE	77. DATE
			[ ] ACCEPT [ ] REJECT		
			[ ] ACCEPT [ ] REJECT		

78. NDT INSPECTION DATA REPAIR NO._____ Defect: L W D

79. Repair Method: Excavation: L W D

80. INSP LAYER	81. INSP METHOD	82. INSP PROC NO.	83. ACCEPT/REJECT	84. NDT INSPECTOR SIGNATURE	85. DATE
			[ ] ACCEPT [ ] REJECT		
			[ ] ACCEPT [ ] REJECT		

86. NDT INSPECTION DATA REPAIR NO._____ Defect: L W D

87. Repair Method: Excavation: L W D

88. INSP LAYER	89. INSP METHOD	90. INSP PROC NO.	91. ACCEPT/REJECT	92. NDT INSPECTOR SIGNATURE	93. DATE
			[ ] ACCEPT [ ] REJECT		
			[ ] ACCEPT [ ] REJECT		

53. REMARKS (Continued):

THE PERSON DESIGNATED TO SIGN FOR AN ACTION VERIFIES, BASED ON PERSONAL OBSERVATION OR CERTIFIED RECORDS, AND CERTIFIES BY THEIR SIGNATURE THAT THE ACTION HAS BEEN PERFORMED IN ACCORDANCE WITH THE SPECIFIED REQUIREMENTS.

WELDING IN PROCESS CONTROL/NONDESTRUCTIVE TEST RECORD
QA FORM 20 (FRONT)
When the form is used for production welding, the blocks marked with a ◆ must be completed by the planner.

◆1. PAGE 1 OF 2

◆2. SHIP USS BLUE RIDGE HULL NO. LCC19	◆3. JCN EM01-L261	◆4. CWP/REC SER. NO. N/A	◆5. LWC KTR	◆6. DATE 5 Apr 2025
◆7. SYSTEM Main Steam System	◆8. COMPONENT Astern Steam Inlet Gage Piping	◆9. DWG NO. Mapping Plan Enclosure-02	◆10. CWP STEP NO. 5.6.2.3	
◆11. JOINT ID PJ-2A	◆12. JOINT DESIGN P-14	13. INST LOCATION: [ ] STBD COMPT: [ ] C/L FR: [ ] PORT	14. WELDED LOCATION: [ ] SHOP [ ] FIELD	

BASE MATERIAL DATA

15. COMP DATA	16. MATERIAL	17. SIZE	18. THICKNESS	19. MATL SPEC	20. MIC NO.
COMPONENT A:					
COMPONENT B:					
21. [ ] SEAL RING [ ] BACK RING/STRIP	22. MATERIAL	23. SIZE	24. THICKNESS	25. MATL SPEC	26. MIC NO.

WELDING MATERIAL SPECIFICATIONS AND DATA

27. TYPE OF FILLER(S)	28. SIZE	29. MATL	30. MIL-SPEC	31. MIC NO.

WELD HISTORY

◆32. WELDING STANDARD: S9074-AR-GIB-010A/278	33. WELDING PROCEDURE:	34. DATA SHEET	35. POSITION: [ ] VERT [ ] FLAT [ ] FIXED [ ] 45 DEG [ ] HORZ [ ] OVHD [ ] ROLLED	
36. ACCESSIBILITY: [ ] 12"OR LESS [ ] UNRESTRICTED	37. PREHEAT TEMP	38. PREHEAT METHOD	39. POST HEAT. TEMP REQD: START TIME: STOP TIME:	
40. PURGE GAS:	41. FLOW RATE	42. SHIELD GAS	43. FLOW RATE	44. CUP SIZE / 45. TUNGSTEN SIZE

46. WELD LAYER	47. PROCESS	48. QUAL EXP DATE	49. AMPS	50. INTERPASS TEMP	51. WELDER SIGNATURE	52. DATE

53. INSPECTION DATA CONTAINED ON REVERSE OF THIS PAGE
REMARKS:

94. FINAL DISPOSITION: [ ] ACCEPT [ ] REJECT	95. NDT SUPERVISOR DATE

THE PERSON DESIGNATED TO SIGN FOR AN ACTION VERIFIES, BASED ON PERSONAL OBSERVATION OR CERTIFIED RECORDS, AND CERTIFIES BY THEIR SIGNATURE THAT THE ACTION HAS BEEN PERFORMED IN ACCORDANCE WITH THE SPECIFIED REQUIREMENTS.

WELDING IN PROCESS CONTROL/NONDESTRUCTIVE TEST RECORD
QA FORM 20 (BACK)

NDT INSPECTION DATA

54. INSPECTION STANDARD	55. WELD CLASS	56. ACCEPTANCE STANDARD	57. ACCEPT CLASS

58. WELD PREP	59. INSP METHOD	60. ACCEPT/REJECT	61. NDT INSPECTOR SIGNATURE	62. DATE
COMPONENT A		[ ] ACCEPT [ ] REJECT		
COMPONENT B		[ ] ACCEPT [ ] REJECT		
63. JOINT FITUP		[ ] ACCEPT [ ] REJECT		

64. INSP LAYER	65. INSP METHOD	66. INSP PROC NO	67. ACCEPT/REJECT	68. NDT INSPECTOR SIGNATURE	69. DATE
			[ ] ACCEPT [ ] REJECT		
			[ ] ACCEPT [ ] REJECT		
			[ ] ACCEPT [ ] REJECT		
			[ ] ACCEPT [ ] REJECT		
			[ ] ACCEPT [ ] REJECT		

70. NDT INSPECTION DATA REPAIR NO._____ Defect: L W D

71. Repair Method: Excavation: L W D

72. INSP LAYER	73. INSP METHOD	74. INSP PROC NO.	75. ACCEPT/REJECT	76. NDT INSPECTOR SIGNATURE	77. DATE
			[ ] ACCEPT [ ] REJECT		
			[ ] ACCEPT [ ] REJECT		

78. NDT INSPECTION DATA REPAIR NO._____ Defect: L W D

79. Repair Method: Excavation: L W D

80. INSP LAYER	81. INSP METHOD	82. INSP PROC NO.	83. ACCEPT/REJECT	84. NDT INSPECTOR SIGNATURE	85. DATE
			[ ] ACCEPT [ ] REJECT		
			[ ] ACCEPT [ ] REJECT		

86. NDT INSPECTION DATA REPAIR NO._____ Defect: L W D

87. Repair Method: Excavation: L W D

88. INSP LAYER	89. INSP METHOD	90. INSP PROC NO.	91. ACCEPT/REJECT	92. NDT INSPECTOR SIGNATURE	93. DATE
			[ ] ACCEPT [ ] REJECT		
			[ ] ACCEPT [ ] REJECT		

53. REMARKS (Continued):

THE PERSON DESIGNATED TO SIGN FOR AN ACTION VERIFIES, BASED ON PERSONAL OBSERVATION OR CERTIFIED RECORDS, AND CERTIFIES BY THEIR SIGNATURE THAT THE ACTION HAS BEEN PERFORMED IN ACCORDANCE WITH THE SPECIFIED REQUIREMENTS.

WELDING IN PROCESS CONTROL/NONDESTRUCTIVE TEST RECORD
QA FORM 20 (FRONT)
When the form is used for production welding, the blocks marked with a ◆ must be completed by the planner.

◆1. PAGE 1 OF 2

◆2. SHIP USS BLUE RIDGE HULL NO. LCC19	◆3. JCN EM01-L261	◆4. CWP/REC SER. NO. N/A	◆5. LWC KTR	◆6. DATE 5 Apr 2025
◆7. SYSTEM Main Steam System	◆8. COMPONENT Astern Steam Inlet Gage Piping	◆9. DWG NO. Mapping Plan Enclosure-02	◆10. CWP STEP NO. 5.6.2.3	
◆11. JOINT ID PJ-3A	◆12. JOINT DESIGN P-17	13. INST LOCATION: [ ] STBD COMPT: [ ] C/L FR: [ ] PORT	14. WELDED LOCATION: [ ] SHOP [ ] FIELD	

BASE MATERIAL DATA

15. COMP DATA	16. MATERIAL	17. SIZE	18. THICKNESS	19. MATL SPEC	20. MIC NO.
COMPONENT A:					
COMPONENT B:					
21. [ ] SEAL RING [ ] BACK RING/STRIP	22. MATERIAL	23. SIZE	24. THICKNESS	25. MATL SPEC	26. MIC NO.

WELDING MATERIAL SPECIFICATIONS AND DATA

27. TYPE OF FILLER(S)	28. SIZE	29. MATL	30. MIL-SPEC	31. MIC NO.

WELD HISTORY

◆32. WELDING STANDARD: S9074-AR-GIB-010A/278	33. WELDING PROCEDURE:	34. DATA SHEET	35. POSITION: [ ] VERT [ ] FLAT [ ] FIXED [ ] 45 DEG [ ] HORZ [ ] OVHD [ ] ROLLED	
36. ACCESSIBILITY: [ ] 12"OR LESS [ ] UNRESTRICTED	37. PREHEAT TEMP	38. PREHEAT METHOD	39. POST HEAT. TEMP REQD: START TIME: STOP TIME:	
40. PURGE GAS:	41. FLOW RATE	42. SHIELD GAS	43. FLOW RATE	44. CUP SIZE / 45. TUNGSTEN SIZE

46. WELD LAYER	47. PROCESS	48. QUAL EXP DATE	49. AMPS	50. INTERPASS TEMP	51. WELDER SIGNATURE	52. DATE

53. INSPECTION DATA CONTAINED ON REVERSE OF THIS PAGE
REMARKS:

94. FINAL DISPOSITION: [ ] ACCEPT [ ] REJECT	95. NDT SUPERVISOR	DATE

THE PERSON DESIGNATED TO SIGN FOR AN ACTION VERIFIES, BASED ON PERSONAL OBSERVATION OR CERTIFIED RECORDS, AND CERTIFIES BY THEIR SIGNATURE THAT THE ACTION HAS BEEN PERFORMED IN ACCORDANCE WITH THE SPECIFIED REQUIREMENTS.

WELDING IN PROCESS CONTROL/NONDESTRUCTIVE TEST RECORD
QA FORM 20 (BACK)

NDT INSPECTION DATA

54. INSPECTION STANDARD	55. WELD CLASS	56. ACCEPTANCE STANDARD	57. ACCEPT CLASS

58. WELD PREP	59. INSP METHOD	60. ACCEPT/REJECT	61. NDT INSPECTOR SIGNATURE	62. DATE
COMPONENT A		[ ] ACCEPT [ ] REJECT		
COMPONENT B		[ ] ACCEPT [ ] REJECT		
63. JOINT FITUP		[ ] ACCEPT [ ] REJECT		

64. INSP LAYER	65. INSP METHOD	66. INSP PROC NO	67. ACCEPT/REJECT	68. NDT INSPECTOR SIGNATURE	69. DATE
			[ ] ACCEPT [ ] REJECT		
			[ ] ACCEPT [ ] REJECT		
			[ ] ACCEPT [ ] REJECT		
			[ ] ACCEPT [ ] REJECT		
			[ ] ACCEPT [ ] REJECT		

70. NDT INSPECTION DATA REPAIR NO._____ Defect: L W D

71. Repair Method: Excavation: L W D

72. INSP LAYER	73. INSP METHOD	74. INSP PROC NO.	75. ACCEPT/REJECT	76. NDT INSPECTOR SIGNATURE	77. DATE
			[ ] ACCEPT [ ] REJECT		
			[ ] ACCEPT [ ] REJECT		

78. NDT INSPECTION DATA REPAIR NO._____ Defect: L W D

79. Repair Method: Excavation: L W D

80. INSP LAYER	81. INSP METHOD	82. INSP PROC NO.	83. ACCEPT/REJECT	84. NDT INSPECTOR SIGNATURE	85. DATE
			[ ] ACCEPT [ ] REJECT		
			[ ] ACCEPT [ ] REJECT		

86. NDT INSPECTION DATA REPAIR NO._____ Defect: L W D

87. Repair Method: Excavation: L W D

88. INSP LAYER	89. INSP METHOD	90. INSP PROC NO.	91. ACCEPT/REJECT	92. NDT INSPECTOR SIGNATURE	93. DATE
			[ ] ACCEPT [ ] REJECT		
			[ ] ACCEPT [ ] REJECT		

53. REMARKS (Continued):

THE PERSON DESIGNATED TO SIGN FOR AN ACTION VERIFIES, BASED ON PERSONAL OBSERVATION OR CERTIFIED RECORDS, AND CERTIFIES BY THEIR SIGNATURE THAT THE ACTION HAS BEEN PERFORMED IN ACCORDANCE WITH THE SPECIFIED REQUIREMENTS.

WELDING IN PROCESS CONTROL/NONDESTRUCTIVE TEST RECORD
QA FORM 20 (FRONT)
When the form is used for production welding, the blocks marked with a ◆ must be completed by the planner.

◆1. PAGE 1 OF 2

◆2. SHIP USS BLUE RIDGE HULL NO. LCC19	◆3. JCN EM01-L261	◆4. CWP/REC SER. NO. N/A	◆5. LWC KTR	◆6. DATE 5 Apr 2025
◆7. SYSTEM Main Steam System	◆8. COMPONENT Astern Steam Inlet Gage Piping	◆9. DWG NO. Mapping Plan Enclosure-02	◆10. CWP STEP NO. 5.6.2.3	
◆11. JOINT ID PJ-4A	◆12. JOINT DESIGN P-17	13. INST LOCATION: [ ] STBD COMPT: [ ] C/L FR: [ ] PORT	14. WELDED LOCATION: [ ] SHOP [ ] FIELD	

BASE MATERIAL DATA

15. COMP DATA	16. MATERIAL	17. SIZE	18. THICKNESS	19. MATL SPEC	20. MIC NO.
COMPONENT A:					
COMPONENT B:					
21. [ ] SEAL RING [ ] BACK RING/STRIP	22. MATERIAL	23. SIZE	24. THICKNESS	25. MATL SPEC	26. MIC NO.

WELDING MATERIAL SPECIFICATIONS AND DATA

27. TYPE OF FILLER(S)	28. SIZE	29. MATL	30. MIL-SPEC	31. MIC NO.

WELD HISTORY

◆32. WELDING STANDARD: S9074-AR-GIB-010A/278	33. WELDING PROCEDURE:	34. DATA SHEET	35. POSITION: [ ] VERT [ ] FLAT [ ] FIXED [ ] 45 DEG [ ] HORZ [ ] OVHD [ ] ROLLED	
36. ACCESSIBILITY: [ ] 12"OR LESS [ ] UNRESTRICTED	37. PREHEAT TEMP	38. PREHEAT METHOD	39. POST HEAT. TEMP REQD: START TIME: STOP TIME:	
40. PURGE GAS:	41. FLOW RATE	42. SHIELD GAS	43. FLOW RATE	44. CUP SIZE / 45. TUNGSTEN SIZE

46. WELD LAYER	47. PROCESS	48. QUAL EXP DATE	49. AMPS	50. INTERPASS TEMP	51. WELDER SIGNATURE	52. DATE

53. INSPECTION DATA CONTAINED ON REVERSE OF THIS PAGE
REMARKS:

94. FINAL DISPOSITION: [ ] ACCEPT [ ] REJECT	95. NDT SUPERVISOR DATE

THE PERSON DESIGNATED TO SIGN FOR AN ACTION VERIFIES, BASED ON PERSONAL OBSERVATION OR CERTIFIED RECORDS, AND CERTIFIES BY THEIR SIGNATURE THAT THE ACTION HAS BEEN PERFORMED IN ACCORDANCE WITH THE SPECIFIED REQUIREMENTS.

WELDING IN PROCESS CONTROL/NONDESTRUCTIVE TEST RECORD
QA FORM 20 (BACK)

NDT INSPECTION DATA

54. INSPECTION STANDARD	55. WELD CLASS	56. ACCEPTANCE STANDARD	57. ACCEPT CLASS

58. WELD PREP	59. INSP METHOD	60. ACCEPT/REJECT	61. NDT INSPECTOR SIGNATURE	62. DATE
COMPONENT A		[ ] ACCEPT [ ] REJECT		
COMPONENT B		[ ] ACCEPT [ ] REJECT		
63. JOINT FITUP		[ ] ACCEPT [ ] REJECT		

64. INSP LAYER	65. INSP METHOD	66. INSP PROC NO	67. ACCEPT/REJECT	68. NDT INSPECTOR SIGNATURE	69. DATE
			[ ] ACCEPT [ ] REJECT		
			[ ] ACCEPT [ ] REJECT		
			[ ] ACCEPT [ ] REJECT		
			[ ] ACCEPT [ ] REJECT		
			[ ] ACCEPT [ ] REJECT		

70. NDT INSPECTION DATA REPAIR NO._____ Defect: L W D

71. Repair Method: Excavation: L W D

72. INSP LAYER	73. INSP METHOD	74. INSP PROC NO.	75. ACCEPT/REJECT	76. NDT INSPECTOR SIGNATURE	77. DATE
			[ ] ACCEPT [ ] REJECT		
			[ ] ACCEPT [ ] REJECT		

78. NDT INSPECTION DATA REPAIR NO._____ Defect: L W D

79. Repair Method: Excavation: L W D

80. INSP LAYER	81. INSP METHOD	82. INSP PROC NO.	83. ACCEPT/REJECT	84. NDT INSPECTOR SIGNATURE	85. DATE
			[ ] ACCEPT [ ] REJECT		
			[ ] ACCEPT [ ] REJECT		

86. NDT INSPECTION DATA REPAIR NO._____ Defect: L W D

87. Repair Method: Excavation: L W D

88. INSP LAYER	89. INSP METHOD	90. INSP PROC NO.	91. ACCEPT/REJECT	92. NDT INSPECTOR SIGNATURE	93. DATE
			[ ] ACCEPT [ ] REJECT		
			[ ] ACCEPT [ ] REJECT		

53. REMARKS (Continued):

THE PERSON DESIGNATED TO SIGN FOR AN ACTION VERIFIES, BASED ON PERSONAL OBSERVATION OR CERTIFIED RECORDS, AND CERTIFIES BY THEIR SIGNATURE THAT THE ACTION HAS BEEN PERFORMED IN ACCORDANCE WITH THE SPECIFIED REQUIREMENTS.

WELDING IN PROCESS CONTROL/NONDESTRUCTIVE TEST RECORD
QA FORM 20 (FRONT)
When the form is used for production welding, the blocks marked with a ◆ must be completed by the planner.

◆1. PAGE 1 OF 2

◆2. SHIP USS BLUE RIDGE HULL NO. LCC19	◆3. JCN EM01-L261	◆4. CWP/REC SER. NO. N/A	◆5. LWC KTR	◆6. DATE 5 Apr 2025
◆7. SYSTEM Main Steam System	◆8. COMPONENT Astern Steam Inlet Gage Piping	◆9. DWG NO. Mapping Plan Enclosure-02	◆10. CWP STEP NO. 5.6.2.3	
◆11. JOINT ID PJ-5A	◆12. JOINT DESIGN P-14	13. INST LOCATION: [ ] STBD COMPT: [ ] C/L FR: [ ] PORT	14. WELDED LOCATION: [ ] SHOP [ ] FIELD	

BASE MATERIAL DATA

15. COMP DATA	16. MATERIAL	17. SIZE	18. THICKNESS	19. MATL SPEC	20. MIC NO.
COMPONENT A:					
COMPONENT B:					
21. [ ] SEAL RING [ ] BACK RING/STRIP	22. MATERIAL	23. SIZE	24. THICKNESS	25. MATL SPEC	26. MIC NO.

WELDING MATERIAL SPECIFICATIONS AND DATA

27. TYPE OF FILLER(S)	28. SIZE	29. MATL	30. MIL-SPEC	31. MIC NO.

WELD HISTORY

◆32. WELDING STANDARD: S9074-AR-GIB-010A/278	33. WELDING PROCEDURE:	34. DATA SHEET	35. POSITION: [ ] VERT [ ] FLAT [ ] FIXED [ ] 45 DEG [ ] HORZ [ ] OVHD [ ] ROLLED	
36. ACCESSIBILITY: [ ] 12"OR LESS [ ] UNRESTRICTED	37. PREHEAT TEMP	38. PREHEAT METHOD	39. POST HEAT. TEMP REQD: START TIME: STOP TIME:	
40. PURGE GAS:	41. FLOW RATE	42. SHIELD GAS	43. FLOW RATE	44. CUP SIZE / 45. TUNGSTEN SIZE

46. WELD LAYER	47. PROCESS	48. QUAL EXP DATE	49. AMPS	50. INTERPASS TEMP	51. WELDER SIGNATURE	52. DATE

53. INSPECTION DATA CONTAINED ON REVERSE OF THIS PAGE
REMARKS:

94. FINAL DISPOSITION: [ ] ACCEPT [ ] REJECT	95. NDT SUPERVISOR DATE

THE PERSON DESIGNATED TO SIGN FOR AN ACTION VERIFIES, BASED ON PERSONAL OBSERVATION OR CERTIFIED RECORDS, AND CERTIFIES BY THEIR SIGNATURE THAT THE ACTION HAS BEEN PERFORMED IN ACCORDANCE WITH THE SPECIFIED REQUIREMENTS.

WELDING IN PROCESS CONTROL/NONDESTRUCTIVE TEST RECORD
QA FORM 20 (BACK)

NDT INSPECTION DATA

54. INSPECTION STANDARD	55. WELD CLASS	56. ACCEPTANCE STANDARD	57. ACCEPT CLASS

58. WELD PREP	59. INSP METHOD	60. ACCEPT/REJECT	61. NDT INSPECTOR SIGNATURE	62. DATE
COMPONENT A		[ ] ACCEPT [ ] REJECT		
COMPONENT B		[ ] ACCEPT [ ] REJECT		
63. JOINT FITUP		[ ] ACCEPT [ ] REJECT		

64. INSP LAYER	65. INSP METHOD	66. INSP PROC NO	67. ACCEPT/REJECT	68. NDT INSPECTOR SIGNATURE	69. DATE
			[ ] ACCEPT [ ] REJECT		
			[ ] ACCEPT [ ] REJECT		
			[ ] ACCEPT [ ] REJECT		
			[ ] ACCEPT [ ] REJECT		
			[ ] ACCEPT [ ] REJECT		

70. NDT INSPECTION DATA REPAIR NO._____ Defect: L W D

71. Repair Method: Excavation: L W D

72. INSP LAYER	73. INSP METHOD	74. INSP PROC NO.	75. ACCEPT/REJECT	76. NDT INSPECTOR SIGNATURE	77. DATE
			[ ] ACCEPT [ ] REJECT		
			[ ] ACCEPT [ ] REJECT		

78. NDT INSPECTION DATA REPAIR NO._____ Defect: L W D

79. Repair Method: Excavation: L W D

80. INSP LAYER	81. INSP METHOD	82. INSP PROC NO.	83. ACCEPT/REJECT	84. NDT INSPECTOR SIGNATURE	85. DATE
			[ ] ACCEPT [ ] REJECT		
			[ ] ACCEPT [ ] REJECT		

86. NDT INSPECTION DATA REPAIR NO._____ Defect: L W D

87. Repair Method: Excavation: L W D

88. INSP LAYER	89. INSP METHOD	90. INSP PROC NO.	91. ACCEPT/REJECT	92. NDT INSPECTOR SIGNATURE	93. DATE
			[ ] ACCEPT [ ] REJECT		
			[ ] ACCEPT [ ] REJECT		

53. REMARKS (Continued):

THE PERSON DESIGNATED TO SIGN FOR AN ACTION VERIFIES, BASED ON PERSONAL OBSERVATION OR CERTIFIED RECORDS, AND CERTIFIES BY THEIR SIGNATURE THAT THE ACTION HAS BEEN PERFORMED IN ACCORDANCE WITH THE SPECIFIED REQUIREMENTS.

WELDING IN PROCESS CONTROL/NONDESTRUCTIVE TEST RECORD
QA FORM 20 (FRONT)
When the form is used for production welding, the blocks marked with a ◆ must be completed by the planner.

◆1. PAGE 1 OF 2

◆2. SHIP USS BLUE RIDGE HULL NO. LCC19	◆3. JCN EM01-L261	◆4. CWP/REC SER. NO. N/A	◆5. LWC KTR	◆6. DATE 5 Apr 2025
◆7. SYSTEM Main Steam System	◆8. COMPONENT Astern Steam Inlet Gage Piping	◆9. DWG NO. Mapping Plan Enclosure-02	◆10. CWP STEP NO. 5.6.2.3	
◆11. JOINT ID PJ-6A	◆12. JOINT DESIGN P-14	13. INST LOCATION: [ ] STBD COMPT: [ ] C/L FR: [ ] PORT	14. WELDED LOCATION: [ ] SHOP [ ] FIELD	

BASE MATERIAL DATA

15. COMP DATA	16. MATERIAL	17. SIZE	18. THICKNESS	19. MATL SPEC	20. MIC NO.
COMPONENT A:					
COMPONENT B:					
21. [ ] SEAL RING [ ] BACK RING/STRIP	22. MATERIAL	23. SIZE	24. THICKNESS	25. MATL SPEC	26. MIC NO.

WELDING MATERIAL SPECIFICATIONS AND DATA

27. TYPE OF FILLER(S)	28. SIZE	29. MATL	30. MIL-SPEC	31. MIC NO.

WELD HISTORY

◆32. WELDING STANDARD: S9074-AR-GIB-010A/278	33. WELDING PROCEDURE:	34. DATA SHEET	35. POSITION: [ ] VERT [ ] FLAT [ ] FIXED [ ] 45 DEG [ ] HORZ [ ] OVHD [ ] ROLLED	
36. ACCESSIBILITY: [ ] 12"OR LESS [ ] UNRESTRICTED	37. PREHEAT TEMP	38. PREHEAT METHOD	39. POST HEAT. TEMP REQD: START TIME: STOP TIME:	
40. PURGE GAS:	41. FLOW RATE	42. SHIELD GAS	43. FLOW RATE	44. CUP SIZE / 45. TUNGSTEN SIZE

46. WELD LAYER	47. PROCESS	48. QUAL EXP DATE	49. AMPS	50. INTERPASS TEMP	51. WELDER SIGNATURE	52. DATE

53. INSPECTION DATA CONTAINED ON REVERSE OF THIS PAGE
REMARKS:

94. FINAL DISPOSITION: [ ] ACCEPT [ ] REJECT	95. NDT SUPERVISOR DATE

THE PERSON DESIGNATED TO SIGN FOR AN ACTION VERIFIES, BASED ON PERSONAL OBSERVATION OR CERTIFIED RECORDS, AND CERTIFIES BY THEIR SIGNATURE THAT THE ACTION HAS BEEN PERFORMED IN ACCORDANCE WITH THE SPECIFIED REQUIREMENTS.

WELDING IN PROCESS CONTROL/NONDESTRUCTIVE TEST RECORD
QA FORM 20 (BACK)

NDT INSPECTION DATA

54. INSPECTION STANDARD	55. WELD CLASS	56. ACCEPTANCE STANDARD	57. ACCEPT CLASS

58. WELD PREP	59. INSP METHOD	60. ACCEPT/REJECT	61. NDT INSPECTOR SIGNATURE	62. DATE
COMPONENT A		[ ] ACCEPT [ ] REJECT		
COMPONENT B		[ ] ACCEPT [ ] REJECT		
63. JOINT FITUP		[ ] ACCEPT [ ] REJECT		

64. INSP LAYER	65. INSP METHOD	66. INSP PROC NO	67. ACCEPT/REJECT	68. NDT INSPECTOR SIGNATURE	69. DATE
			[ ] ACCEPT [ ] REJECT		
			[ ] ACCEPT [ ] REJECT		
			[ ] ACCEPT [ ] REJECT		
			[ ] ACCEPT [ ] REJECT		
			[ ] ACCEPT [ ] REJECT		

70. NDT INSPECTION DATA REPAIR NO._____ Defect: L W D

71. Repair Method: Excavation: L W D

72. INSP LAYER	73. INSP METHOD	74. INSP PROC NO.	75. ACCEPT/REJECT	76. NDT INSPECTOR SIGNATURE	77. DATE
			[ ] ACCEPT [ ] REJECT		
			[ ] ACCEPT [ ] REJECT		

78. NDT INSPECTION DATA REPAIR NO._____ Defect: L W D

79. Repair Method: Excavation: L W D

80. INSP LAYER	81. INSP METHOD	82. INSP PROC NO.	83. ACCEPT/REJECT	84. NDT INSPECTOR SIGNATURE	85. DATE
			[ ] ACCEPT [ ] REJECT		
			[ ] ACCEPT [ ] REJECT		

86. NDT INSPECTION DATA REPAIR NO._____ Defect: L W D

87. Repair Method: Excavation: L W D

88. INSP LAYER	89. INSP METHOD	90. INSP PROC NO.	91. ACCEPT/REJECT	92. NDT INSPECTOR SIGNATURE	93. DATE
			[ ] ACCEPT [ ] REJECT		
			[ ] ACCEPT [ ] REJECT		

53. REMARKS (Continued):

THE PERSON DESIGNATED TO SIGN FOR AN ACTION VERIFIES, BASED ON PERSONAL OBSERVATION OR CERTIFIED RECORDS, AND CERTIFIES BY THEIR SIGNATURE THAT THE ACTION HAS BEEN PERFORMED IN ACCORDANCE WITH THE SPECIFIED REQUIREMENTS.

WELDING IN PROCESS CONTROL/NONDESTRUCTIVE TEST RECORD
QA FORM 20 (FRONT)
When the form is used for production welding, the blocks marked with a ◆ must be completed by the planner.

◆1. PAGE 1 OF 2

◆2. SHIP USS BLUE RIDGE HULL NO. LCC19	◆3. JCN EM01-L261	◆4. CWP/REC SER. NO. N/A	◆5. LWC KTR	◆6. DATE 5 Apr 2025
◆7. SYSTEM Main Turbine Drain System	◆8. COMPONENT Ahead Turbine Steam Inlet Gage Piping	◆9. DWG NO. Mapping Plan Enclosure-02	◆10. CWP STEP NO. 5.7.2.3	
◆11. JOINT ID PJ-1B	◆12. JOINT DESIGN P-14	13. INST LOCATION: [ ] STBD COMPT: [ ] C/L FR: [ ] PORT	14. WELDED LOCATION: [ ] SHOP [ ] FIELD	

BASE MATERIAL DATA

15. COMP DATA	16. MATERIAL	17. SIZE	18. THICKNESS	19. MATL SPEC	20. MIC NO.
COMPONENT A:					
COMPONENT B:					
21. [ ] SEAL RING [ ] BACK RING/STRIP	22. MATERIAL	23. SIZE	24. THICKNESS	25. MATL SPEC	26. MIC NO.

WELDING MATERIAL SPECIFICATIONS AND DATA

27. TYPE OF FILLER(S)	28. SIZE	29. MATL	30. MIL-SPEC	31. MIC NO.

WELD HISTORY

◆32. WELDING STANDARD: S9074-AR-GIB-010A/278	33. WELDING PROCEDURE:	34. DATA SHEET	35. POSITION: [ ] VERT [ ] HORZ [ ] FLAT [ ] OVHD [ ] FIXED [ ] ROLLED [ ] 45 DEG	
36. ACCESSIBILITY: [ ] 12"OR LESS [ ] UNRESTRICTED	37. PREHEAT TEMP	38. PREHEAT METHOD	39. POST HEAT. TEMP REQD: START TIME: STOP TIME:	
40. PURGE GAS:	41. FLOW RATE	42. SHIELD GAS	43. FLOW RATE	44. CUP SIZE / 45. TUNGSTEN SIZE

46. WELD LAYER	47. PROCESS	48. QUAL EXP DATE	49. AMPS	50. INTERPASS TEMP	51. WELDER SIGNATURE	52. DATE

53. INSPECTION DATA CONTAINED ON REVERSE OF THIS PAGE
REMARKS:

94. FINAL DISPOSITION: [ ] ACCEPT [ ] REJECT	95. NDT SUPERVISOR	DATE

THE PERSON DESIGNATED TO SIGN FOR AN ACTION VERIFIES, BASED ON PERSONAL OBSERVATION OR CERTIFIED RECORDS, AND CERTIFIES BY THEIR SIGNATURE THAT THE ACTION HAS BEEN PERFORMED IN ACCORDANCE WITH THE SPECIFIED REQUIREMENTS.

WELDING IN PROCESS CONTROL/NONDESTRUCTIVE TEST RECORD
QA FORM 20 (BACK)

NDT INSPECTION DATA

54. INSPECTION STANDARD	55. WELD CLASS	56. ACCEPTANCE STANDARD	57. ACCEPT CLASS

58. WELD PREP	59. INSP METHOD	60. ACCEPT/REJECT	61. NDT INSPECTOR SIGNATURE	62. DATE
COMPONENT A		[ ] ACCEPT [ ] REJECT		
COMPONENT B		[ ] ACCEPT [ ] REJECT		
63. JOINT FITUP		[ ] ACCEPT [ ] REJECT		

64. INSP LAYER	65. INSP METHOD	66. INSP PROC NO	67. ACCEPT/REJECT	68. NDT INSPECTOR SIGNATURE	69. DATE
			[ ] ACCEPT [ ] REJECT		
			[ ] ACCEPT [ ] REJECT		
			[ ] ACCEPT [ ] REJECT		
			[ ] ACCEPT [ ] REJECT		
			[ ] ACCEPT [ ] REJECT		

70. NDT INSPECTION DATA REPAIR NO._____ Defect: L W D

71. Repair Method: Excavation: L W D

72. INSP LAYER	73. INSP METHOD	74. INSP PROC NO.	75. ACCEPT/REJECT	76. NDT INSPECTOR SIGNATURE	77. DATE
			[ ] ACCEPT [ ] REJECT		
			[ ] ACCEPT [ ] REJECT		

78. NDT INSPECTION DATA REPAIR NO._____ Defect: L W D

79. Repair Method: Excavation: L W D

80. INSP LAYER	81. INSP METHOD	82. INSP PROC NO.	83. ACCEPT/REJECT	84. NDT INSPECTOR SIGNATURE	85. DATE
			[ ] ACCEPT [ ] REJECT		
			[ ] ACCEPT [ ] REJECT		

86. NDT INSPECTION DATA REPAIR NO._____ Defect: L W D

87. Repair Method: Excavation: L W D

88. INSP LAYER	89. INSP METHOD	90. INSP PROC NO.	91. ACCEPT/REJECT	92. NDT INSPECTOR SIGNATURE	93. DATE
			[ ] ACCEPT [ ] REJECT		
			[ ] ACCEPT [ ] REJECT		

53. REMARKS (Continued):

THE PERSON DESIGNATED TO SIGN FOR AN ACTION VERIFIES, BASED ON PERSONAL OBSERVATION OR CERTIFIED RECORDS, AND CERTIFIES BY THEIR SIGNATURE THAT THE ACTION HAS BEEN PERFORMED IN ACCORDANCE WITH THE SPECIFIED REQUIREMENTS.

WELDING IN PROCESS CONTROL/NONDESTRUCTIVE TEST RECORD
QA FORM 20 (FRONT)
When the form is used for production welding, the blocks marked with a ◆ must be completed by the planner.

◆1. PAGE 1 OF 2

◆2. SHIP USS BLUE RIDGE HULL NO. LCC19	◆3. JCN EM01-L261	◆4. CWP/REC SER. NO. N/A	◆5. LWC KTR	◆6. DATE 5 Apr 2025
◆7. SYSTEM Main Turbine Drain System	◆8. COMPONENT Ahead Turbine Steam Inlet Gage Piping	◆9. DWG NO. Mapping Plan Enclosure-02	◆10. CWP STEP NO. 5.7.2.3	
◆11. JOINT ID PJ-2B	◆12. JOINT DESIGN P-14	13. INST LOCATION: [ ] STBD COMPT: [ ] C/L FR: [ ] PORT	14. WELDED LOCATION: [ ] SHOP [ ] FIELD	

BASE MATERIAL DATA

15. COMP DATA	16. MATERIAL	17. SIZE	18. THICKNESS	19. MATL SPEC	20. MIC NO.
COMPONENT A:					
COMPONENT B:					
21. [ ] SEAL RING [ ] BACK RING/STRIP	22. MATERIAL	23. SIZE	24. THICKNESS	25. MATL SPEC	26. MIC NO.

WELDING MATERIAL SPECIFICATIONS AND DATA

27. TYPE OF FILLER(S)	28. SIZE	29. MATL	30. MIL-SPEC	31. MIC NO.

WELD HISTORY

◆32. WELDING STANDARD: S9074-AR-GIB-010A/278	33. WELDING PROCEDURE:	34. DATA SHEET	35. POSITION: [ ] VERT [ ] HORZ [ ] FLAT [ ] OVHD [ ] FIXED [ ] ROLLED [ ] 45 DEG	
36. ACCESSIBILITY: [ ] 12"OR LESS [ ] UNRESTRICTED	37. PREHEAT TEMP	38. PREHEAT METHOD	39. POST HEAT. TEMP REQD: START TIME: STOP TIME:	
40. PURGE GAS:	41. FLOW RATE	42. SHIELD GAS	43. FLOW RATE	44. CUP SIZE / 45. TUNGSTEN SIZE

46. WELD LAYER	47. PROCESS	48. QUAL EXP DATE	49. AMPS	50. INTERPASS TEMP	51. WELDER SIGNATURE	52. DATE

53. INSPECTION DATA CONTAINED ON REVERSE OF THIS PAGE
REMARKS:

94. FINAL DISPOSITION: [ ] ACCEPT [ ] REJECT	95. NDT SUPERVISOR	DATE

THE PERSON DESIGNATED TO SIGN FOR AN ACTION VERIFIES, BASED ON PERSONAL OBSERVATION OR CERTIFIED RECORDS, AND CERTIFIES BY THEIR SIGNATURE THAT THE ACTION HAS BEEN PERFORMED IN ACCORDANCE WITH THE SPECIFIED REQUIREMENTS.

WELDING IN PROCESS CONTROL/NONDESTRUCTIVE TEST RECORD
QA FORM 20 (BACK)

NDT INSPECTION DATA

54. INSPECTION STANDARD	55. WELD CLASS	56. ACCEPTANCE STANDARD	57. ACCEPT CLASS

58. WELD PREP	59. INSP METHOD	60. ACCEPT/REJECT	61. NDT INSPECTOR SIGNATURE	62. DATE
COMPONENT A		[ ] ACCEPT [ ] REJECT		
COMPONENT B		[ ] ACCEPT [ ] REJECT		
63. JOINT FITUP		[ ] ACCEPT [ ] REJECT		

64. INSP LAYER	65. INSP METHOD	66. INSP PROC NO	67. ACCEPT/REJECT	68. NDT INSPECTOR SIGNATURE	69. DATE
			[ ] ACCEPT [ ] REJECT		
			[ ] ACCEPT [ ] REJECT		
			[ ] ACCEPT [ ] REJECT		
			[ ] ACCEPT [ ] REJECT		
			[ ] ACCEPT [ ] REJECT		

70. NDT INSPECTION DATA REPAIR NO._____ Defect: L W D

71. Repair Method: Excavation: L W D

72. INSP LAYER	73. INSP METHOD	74. INSP PROC NO.	75. ACCEPT/REJECT	76. NDT INSPECTOR SIGNATURE	77. DATE
			[ ] ACCEPT [ ] REJECT		
			[ ] ACCEPT [ ] REJECT		

78. NDT INSPECTION DATA REPAIR NO._____ Defect: L W D

79. Repair Method: Excavation: L W D

80. INSP LAYER	81. INSP METHOD	82. INSP PROC NO.	83. ACCEPT/REJECT	84. NDT INSPECTOR SIGNATURE	85. DATE
			[ ] ACCEPT [ ] REJECT		
			[ ] ACCEPT [ ] REJECT		

86. NDT INSPECTION DATA REPAIR NO._____ Defect: L W D

87. Repair Method: Excavation: L W D

88. INSP LAYER	89. INSP METHOD	90. INSP PROC NO.	91. ACCEPT/REJECT	92. NDT INSPECTOR SIGNATURE	93. DATE
			[ ] ACCEPT [ ] REJECT		
			[ ] ACCEPT [ ] REJECT		

53. REMARKS (Continued):

THE PERSON DESIGNATED TO SIGN FOR AN ACTION VERIFIES, BASED ON PERSONAL OBSERVATION OR CERTIFIED RECORDS, AND CERTIFIES BY THEIR SIGNATURE THAT THE ACTION HAS BEEN PERFORMED IN ACCORDANCE WITH THE SPECIFIED REQUIREMENTS.

WELDING IN PROCESS CONTROL/NONDESTRUCTIVE TEST RECORD
QA FORM 20 (FRONT)
When the form is used for production welding, the blocks marked with a ◆ must be completed by the planner.

◆1. PAGE 1 OF 2

◆2. SHIP USS BLUE RIDGE HULL NO. LCC19	◆3. JCN EM01-L261	◆4. CWP/REC SER. NO. N/A	◆5. LWC KTR	◆6. DATE 5 Apr 2025
◆7. SYSTEM Main Turbine Drain System	◆8. COMPONENT Ahead Turbine Steam Inlet Gage Piping	◆9. DWG NO. Mapping Plan Enclosure-02	◆10. CWP STEP NO. 5.7.2.3	
◆11. JOINT ID PJ-3B	◆12. JOINT DESIGN P-17	13. INST LOCATION: [ ] STBD COMPT: [ ] C/L FR: [ ] PORT	14. WELDED LOCATION: [ ] SHOP [ ] FIELD	

BASE MATERIAL DATA

15. COMP DATA	16. MATERIAL	17. SIZE	18. THICKNESS	19. MATL SPEC	20. MIC NO.
COMPONENT A:					
COMPONENT B:					
21. [ ] SEAL RING [ ] BACK RING/STRIP	22. MATERIAL	23. SIZE	24. THICKNESS	25. MATL SPEC	26. MIC NO.

WELDING MATERIAL SPECIFICATIONS AND DATA

27. TYPE OF FILLER(S)	28. SIZE	29. MATL	30. MIL-SPEC	31. MIC NO.

WELD HISTORY

◆32. WELDING STANDARD: S9074-AR-GIB-010A/278	33. WELDING PROCEDURE:	34. DATA SHEET	35. POSITION: [ ] VERT [ ] HORZ [ ] FLAT [ ] OVHD [ ] FIXED [ ] ROLLED [ ] 45 DEG	
36. ACCESSIBILITY: [ ] 12"OR LESS [ ] UNRESTRICTED	37. PREHEAT TEMP	38. PREHEAT METHOD	39. POST HEAT. TEMP REQD: START TIME: STOP TIME:	
40. PURGE GAS:	41. FLOW RATE	42. SHIELD GAS	43. FLOW RATE	44. CUP SIZE / 45. TUNGSTEN SIZE

46. WELD LAYER	47. PROCESS	48. QUAL EXP DATE	49. AMPS	50. INTERPASS TEMP	51. WELDER SIGNATURE	52. DATE

53. INSPECTION DATA CONTAINED ON REVERSE OF THIS PAGE
REMARKS:

94. FINAL DISPOSITION: [ ] ACCEPT [ ] REJECT	95. NDT SUPERVISOR	DATE

THE PERSON DESIGNATED TO SIGN FOR AN ACTION VERIFIES, BASED ON PERSONAL OBSERVATION OR CERTIFIED RECORDS, AND CERTIFIES BY THEIR SIGNATURE THAT THE ACTION HAS BEEN PERFORMED IN ACCORDANCE WITH THE SPECIFIED REQUIREMENTS.

WELDING IN PROCESS CONTROL/NONDESTRUCTIVE TEST RECORD
QA FORM 20 (BACK)

NDT INSPECTION DATA

54. INSPECTION STANDARD	55. WELD CLASS	56. ACCEPTANCE STANDARD	57. ACCEPT CLASS

58. WELD PREP	59. INSP METHOD	60. ACCEPT/REJECT	61. NDT INSPECTOR SIGNATURE	62. DATE
COMPONENT A		[ ] ACCEPT [ ] REJECT		
COMPONENT B		[ ] ACCEPT [ ] REJECT		
63. JOINT FITUP		[ ] ACCEPT [ ] REJECT		

64. INSP LAYER	65. INSP METHOD	66. INSP PROC NO	67. ACCEPT/REJECT	68. NDT INSPECTOR SIGNATURE	69. DATE
			[ ] ACCEPT [ ] REJECT		
			[ ] ACCEPT [ ] REJECT		
			[ ] ACCEPT [ ] REJECT		
			[ ] ACCEPT [ ] REJECT		
			[ ] ACCEPT [ ] REJECT		

70. NDT INSPECTION DATA REPAIR NO._____ Defect: L W D

71. Repair Method: Excavation: L W D

72. INSP LAYER	73. INSP METHOD	74. INSP PROC NO.	75. ACCEPT/REJECT	76. NDT INSPECTOR SIGNATURE	77. DATE
			[ ] ACCEPT [ ] REJECT		
			[ ] ACCEPT [ ] REJECT		

78. NDT INSPECTION DATA REPAIR NO._____ Defect: L W D

79. Repair Method: Excavation: L W D

80. INSP LAYER	81. INSP METHOD	82. INSP PROC NO.	83. ACCEPT/REJECT	84. NDT INSPECTOR SIGNATURE	85. DATE
			[ ] ACCEPT [ ] REJECT		
			[ ] ACCEPT [ ] REJECT		

86. NDT INSPECTION DATA REPAIR NO._____ Defect: L W D

87. Repair Method: Excavation: L W D

88. INSP LAYER	89. INSP METHOD	90. INSP PROC NO.	91. ACCEPT/REJECT	92. NDT INSPECTOR SIGNATURE	93. DATE
			[ ] ACCEPT [ ] REJECT		
			[ ] ACCEPT [ ] REJECT		

53. REMARKS (Continued):

THE PERSON DESIGNATED TO SIGN FOR AN ACTION VERIFIES, BASED ON PERSONAL OBSERVATION OR CERTIFIED RECORDS, AND CERTIFIES BY THEIR SIGNATURE THAT THE ACTION HAS BEEN PERFORMED IN ACCORDANCE WITH THE SPECIFIED REQUIREMENTS.

WELDING IN PROCESS CONTROL/NONDESTRUCTIVE TEST RECORD
QA FORM 20 (FRONT)
When the form is used for production welding, the blocks marked with a ◆ must be completed by the planner.

◆1. PAGE 1 OF 2

◆2. SHIP USS BLUE RIDGE HULL NO. LCC19	◆3. JCN EM01-L261	◆4. CWP/REC SER. NO. N/A	◆5. LWC KTR	◆6. DATE 5 Apr 2025
◆7. SYSTEM Main Turbine Drain System	◆8. COMPONENT Ahead Turbine Steam Inlet Gage Piping	◆9. DWG NO. Mapping Plan Enclosure-02	◆10. CWP STEP NO. 5.7.2.3	

◆11. JOINT ID PJ-4B	◆12. JOINT DESIGN P-17	13. INST LOCATION: [ ] STBD COMPT: [ ] C/L FR: [ ] PORT	14. WELDED LOCATION: [ ] SHOP [ ] FIELD

BASE MATERIAL DATA

15. COMP DATA	16. MATERIAL	17. SIZE	18. THICKNESS	19. MATL SPEC	20. MIC NO.
COMPONENT A:					
COMPONENT B:					
21. [ ] SEAL RING [ ] BACK RING/STRIP	22. MATERIAL	23. SIZE	24. THICKNESS	25. MATL SPEC	26. MIC NO.

WELDING MATERIAL SPECIFICATIONS AND DATA

27. TYPE OF FILLER(S)	28. SIZE	29. MATL	30. MIL-SPEC	31. MIC NO.

WELD HISTORY

◆32. WELDING STANDARD: S9074-AR-GIB-010A/278	33. WELDING PROCEDURE:	34. DATA SHEET	35. POSITION: [ ] VERT [ ] FLAT [ ] FIXED [ ] 45 DEG [ ] HORZ [ ] OVHD [ ] ROLLED
36. ACCESSIBILITY: [ ] 12"OR LESS [ ] UNRESTRICTED	37. PREHEAT TEMP	38. PREHEAT METHOD	39. POST HEAT. START TIME: TEMP REQD: STOP TIME:

40. PURGE GAS:	41. FLOW RATE	42. SHIELD GAS	43. FLOW RATE	44. CUP SIZE	45. TUNGSTEN SIZE

46. WELD LAYER	47. PROCESS	48. QUAL EXP DATE	49. AMPS	50. INTERPASS TEMP	51. WELDER SIGNATURE	52. DATE

53. INSPECTION DATA CONTAINED ON REVERSE OF THIS PAGE
REMARKS:

94. FINAL DISPOSITION: [ ] ACCEPT [ ] REJECT	95. NDT SUPERVISOR	DATE

THE PERSON DESIGNATED TO SIGN FOR AN ACTION VERIFIES, BASED ON PERSONAL OBSERVATION OR CERTIFIED RECORDS, AND CERTIFIES BY THEIR SIGNATURE THAT THE ACTION HAS BEEN PERFORMED IN ACCORDANCE WITH THE SPECIFIED REQUIREMENTS.

WELDING IN PROCESS CONTROL/NONDESTRUCTIVE TEST RECORD
QA FORM 20 (BACK)

NDT INSPECTION DATA

54. INSPECTION STANDARD	55. WELD CLASS	56. ACCEPTANCE STANDARD	57. ACCEPT CLASS

58. WELD PREP	59. INSP METHOD	60. ACCEPT/REJECT	61. NDT INSPECTOR SIGNATURE	62. DATE
COMPONENT A		[ ] ACCEPT [ ] REJECT		
COMPONENT B		[ ] ACCEPT [ ] REJECT		
63. JOINT FITUP		[ ] ACCEPT [ ] REJECT		

64. INSP LAYER	65. INSP METHOD	66. INSP PROC NO	67. ACCEPT/REJECT	68. NDT INSPECTOR SIGNATURE	69. DATE
			[ ] ACCEPT [ ] REJECT		
			[ ] ACCEPT [ ] REJECT		
			[ ] ACCEPT [ ] REJECT		
			[ ] ACCEPT [ ] REJECT		
			[ ] ACCEPT [ ] REJECT		

70. NDT INSPECTION DATA REPAIR NO._____ Defect: L W D

71. Repair Method: Excavation: L W D

72. INSP LAYER	73. INSP METHOD	74. INSP PROC NO.	75. ACCEPT/REJECT	76. NDT INSPECTOR SIGNATURE	77. DATE
			[ ] ACCEPT [ ] REJECT		
			[ ] ACCEPT [ ] REJECT		

78. NDT INSPECTION DATA REPAIR NO._____ Defect: L W D

79. Repair Method: Excavation: L W D

80. INSP LAYER	81. INSP METHOD	82. INSP PROC NO.	83. ACCEPT/REJECT	84. NDT INSPECTOR SIGNATURE	85. DATE
			[ ] ACCEPT [ ] REJECT		
			[ ] ACCEPT [ ] REJECT		

86. NDT INSPECTION DATA REPAIR NO._____ Defect: L W D

87. Repair Method: Excavation: L W D

88. INSP LAYER	89. INSP METHOD	90. INSP PROC NO.	91. ACCEPT/REJECT	92. NDT INSPECTOR SIGNATURE	93. DATE
			[ ] ACCEPT [ ] REJECT		
			[ ] ACCEPT [ ] REJECT		

53. REMARKS (Continued):

THE PERSON DESIGNATED TO SIGN FOR AN ACTION VERIFIES, BASED ON PERSONAL OBSERVATION OR CERTIFIED RECORDS, AND CERTIFIES BY THEIR SIGNATURE THAT THE ACTION HAS BEEN PERFORMED IN ACCORDANCE WITH THE SPECIFIED REQUIREMENTS.

WELDING IN PROCESS CONTROL/NONDESTRUCTIVE TEST RECORD
QA FORM 20 (FRONT)
When the form is used for production welding, the blocks marked with a ◆ must be completed by the planner.

◆1. PAGE 1 OF 2

◆2. SHIP USS BLUE RIDGE HULL NO. LCC19	◆3. JCN EM01-L261	◆4. CWP/REC SER. NO. N/A	◆5. LWC KTR	◆6. DATE 5 Apr 2025
◆7. SYSTEM Main Turbine Drain System	◆8. COMPONENT Ahead Turbine Steam Inlet Gage Piping	◆9. DWG NO. Mapping Plan Enclosure-02	◆10. CWP STEP NO. 5.7.2.3	

◆11. JOINT ID PJ-5B	◆12. JOINT DESIGN P-14	13. INST LOCATION: [ ] STBD COMPT: [ ] C/L FR: [ ] PORT	14. WELDED LOCATION: [ ] SHOP [ ] FIELD

BASE MATERIAL DATA

15. COMP DATA	16. MATERIAL	17. SIZE	18. THICKNESS	19. MATL SPEC	20. MIC NO.
COMPONENT A:					
COMPONENT B:					
21. [ ] SEAL RING [ ] BACK RING/STRIP	22. MATERIAL	23. SIZE	24. THICKNESS	25. MATL SPEC	26. MIC NO.

WELDING MATERIAL SPECIFICATIONS AND DATA

27. TYPE OF FILLER(S)	28. SIZE	29. MATL	30. MIL-SPEC	31. MIC NO.

WELD HISTORY

◆32. WELDING STANDARD: S9074-AR-GIB-010A/278	33. WELDING PROCEDURE:	34. DATA SHEET	35. POSITION: [ ] VERT [ ] FLAT [ ] FIXED [ ] 45 DEG [ ] HORZ [ ] OVHD [ ] ROLLED
36. ACCESSIBILITY: [ ] 12"OR LESS [ ] UNRESTRICTED	37. PREHEAT TEMP	38. PREHEAT METHOD	39. POST HEAT. START TIME: TEMP REQD: STOP TIME:

40. PURGE GAS:	41. FLOW RATE	42. SHIELD GAS	43. FLOW RATE	44. CUP SIZE	45. TUNGSTEN SIZE

46. WELD LAYER	47. PROCESS	48. QUAL EXP DATE	49. AMPS	50. INTERPASS TEMP	51. WELDER SIGNATURE	52. DATE

53. INSPECTION DATA CONTAINED ON REVERSE OF THIS PAGE
REMARKS:

94. FINAL DISPOSITION: [ ] ACCEPT [ ] REJECT	95. NDT SUPERVISOR	DATE

THE PERSON DESIGNATED TO SIGN FOR AN ACTION VERIFIES, BASED ON PERSONAL OBSERVATION OR CERTIFIED RECORDS, AND CERTIFIES BY THEIR SIGNATURE THAT THE ACTION HAS BEEN PERFORMED IN ACCORDANCE WITH THE SPECIFIED REQUIREMENTS.

WELDING IN PROCESS CONTROL/NONDESTRUCTIVE TEST RECORD
QA FORM 20 (BACK)

NDT INSPECTION DATA

54. INSPECTION STANDARD	55. WELD CLASS	56. ACCEPTANCE STANDARD	57. ACCEPT CLASS

58. WELD PREP	59. INSP METHOD	60. ACCEPT/REJECT	61. NDT INSPECTOR SIGNATURE	62. DATE
COMPONENT A		[ ] ACCEPT [ ] REJECT		
COMPONENT B		[ ] ACCEPT [ ] REJECT		
63. JOINT FITUP		[ ] ACCEPT [ ] REJECT		

64. INSP LAYER	65. INSP METHOD	66. INSP PROC NO	67. ACCEPT/REJECT	68. NDT INSPECTOR SIGNATURE	69. DATE
			[ ] ACCEPT [ ] REJECT		
			[ ] ACCEPT [ ] REJECT		
			[ ] ACCEPT [ ] REJECT		
			[ ] ACCEPT [ ] REJECT		
			[ ] ACCEPT [ ] REJECT		

70. NDT INSPECTION DATA REPAIR NO._____ Defect: L W D

71. Repair Method: Excavation: L W D

72. INSP LAYER	73. INSP METHOD	74. INSP PROC NO.	75. ACCEPT/REJECT	76. NDT INSPECTOR SIGNATURE	77. DATE
			[ ] ACCEPT [ ] REJECT		
			[ ] ACCEPT [ ] REJECT		

78. NDT INSPECTION DATA REPAIR NO._____ Defect: L W D

79. Repair Method: Excavation: L W D

80. INSP LAYER	81. INSP METHOD	82. INSP PROC NO.	83. ACCEPT/REJECT	84. NDT INSPECTOR SIGNATURE	85. DATE
			[ ] ACCEPT [ ] REJECT		
			[ ] ACCEPT [ ] REJECT		

86. NDT INSPECTION DATA REPAIR NO._____ Defect: L W D

87. Repair Method: Excavation: L W D

88. INSP LAYER	89. INSP METHOD	90. INSP PROC NO.	91. ACCEPT/REJECT	92. NDT INSPECTOR SIGNATURE	93. DATE
			[ ] ACCEPT [ ] REJECT		
			[ ] ACCEPT [ ] REJECT		

53. REMARKS (Continued):

THE PERSON DESIGNATED TO SIGN FOR AN ACTION VERIFIES, BASED ON PERSONAL OBSERVATION OR CERTIFIED RECORDS, AND CERTIFIES BY THEIR SIGNATURE THAT THE ACTION HAS BEEN PERFORMED IN ACCORDANCE WITH THE SPECIFIED REQUIREMENTS.

WELDING IN PROCESS CONTROL/NONDESTRUCTIVE TEST RECORD
QA FORM 20 (FRONT)
When the form is used for production welding, the blocks marked with a ◆ must be completed by the planner.

◆1. PAGE 1 OF 2

◆2. SHIP USS BLUE RIDGE HULL NO. LCC19	◆3. JCN EM01-L261	◆4. CWP/REC SER. NO. N/A	◆5. LWC KTR	◆6. DATE 5 Apr 2025
◆7. SYSTEM Main Turbine Drain System	◆8. COMPONENT Ahead Turbine Steam Inlet Gage Piping	◆9. DWG NO. Mapping Plan Enclosure-02	◆10. CWP STEP NO. 5.7.2.3	

◆11. JOINT ID PJ-6B	◆12. JOINT DESIGN P-14	13. INST LOCATION: [ ] STBD COMPT: [ ] C/L FR: [ ] PORT	14. WELDED LOCATION: [ ] SHOP [ ] FIELD

BASE MATERIAL DATA

15. COMP DATA	16. MATERIAL	17. SIZE	18. THICKNESS	19. MATL SPEC	20. MIC NO.
COMPONENT A:					
COMPONENT B:					
21. [ ] SEAL RING [ ] BACK RING/STRIP	22. MATERIAL	23. SIZE	24. THICKNESS	25. MATL SPEC	26. MIC NO.

WELDING MATERIAL SPECIFICATIONS AND DATA

27. TYPE OF FILLER(S)	28. SIZE	29. MATL	30. MIL-SPEC	31. MIC NO.

WELD HISTORY

◆32. WELDING STANDARD: S9074-AR-GIB-010A/278	33. WELDING PROCEDURE:	34. DATA SHEET	35. POSITION: [ ] VERT [ ] FLAT [ ] FIXED [ ] 45 DEG [ ] HORZ [ ] OVHD [ ] ROLLED
36. ACCESSIBILITY: [ ] 12"OR LESS [ ] UNRESTRICTED	37. PREHEAT TEMP	38. PREHEAT METHOD	39. POST HEAT. START TIME: TEMP REQD: STOP TIME:

40. PURGE GAS:	41. FLOW RATE	42. SHIELD GAS	43. FLOW RATE	44. CUP SIZE	45. TUNGSTEN SIZE

46. WELD LAYER	47. PROCESS	48. QUAL EXP DATE	49. AMPS	50. INTERPASS TEMP	51. WELDER SIGNATURE	52. DATE

53. INSPECTION DATA CONTAINED ON REVERSE OF THIS PAGE
REMARKS:

94. FINAL DISPOSITION: [ ] ACCEPT [ ] REJECT	95. NDT SUPERVISOR	DATE

THE PERSON DESIGNATED TO SIGN FOR AN ACTION VERIFIES, BASED ON PERSONAL OBSERVATION OR CERTIFIED RECORDS, AND CERTIFIES BY THEIR SIGNATURE THAT THE ACTION HAS BEEN PERFORMED IN ACCORDANCE WITH THE SPECIFIED REQUIREMENTS.

WELDING IN PROCESS CONTROL/NONDESTRUCTIVE TEST RECORD
QA FORM 20 (BACK)

NDT INSPECTION DATA

54. INSPECTION STANDARD	55. WELD CLASS	56. ACCEPTANCE STANDARD	57. ACCEPT CLASS

58. WELD PREP	59. INSP METHOD	60. ACCEPT/REJECT	61. NDT INSPECTOR SIGNATURE	62. DATE
COMPONENT A		[ ] ACCEPT [ ] REJECT		
COMPONENT B		[ ] ACCEPT [ ] REJECT		
63. JOINT FITUP		[ ] ACCEPT [ ] REJECT		

64. INSP LAYER	65. INSP METHOD	66. INSP PROC NO	67. ACCEPT/REJECT	68. NDT INSPECTOR SIGNATURE	69. DATE
			[ ] ACCEPT [ ] REJECT		
			[ ] ACCEPT [ ] REJECT		
			[ ] ACCEPT [ ] REJECT		
			[ ] ACCEPT [ ] REJECT		
			[ ] ACCEPT [ ] REJECT		

70. NDT INSPECTION DATA REPAIR NO._____ Defect: L W D

71. Repair Method: Excavation: L W D

72. INSP LAYER	73. INSP METHOD	74. INSP PROC NO.	75. ACCEPT/REJECT	76. NDT INSPECTOR SIGNATURE	77. DATE
			[ ] ACCEPT [ ] REJECT		
			[ ] ACCEPT [ ] REJECT		

78. NDT INSPECTION DATA REPAIR NO._____ Defect: L W D

79. Repair Method: Excavation: L W D

80. INSP LAYER	81. INSP METHOD	82. INSP PROC NO.	83. ACCEPT/REJECT	84. NDT INSPECTOR SIGNATURE	85. DATE
			[ ] ACCEPT [ ] REJECT		
			[ ] ACCEPT [ ] REJECT		

86. NDT INSPECTION DATA REPAIR NO._____ Defect: L W D

87. Repair Method: Excavation: L W D

88. INSP LAYER	89. INSP METHOD	90. INSP PROC NO.	91. ACCEPT/REJECT	92. NDT INSPECTOR SIGNATURE	93. DATE
			[ ] ACCEPT [ ] REJECT		
			[ ] ACCEPT [ ] REJECT		

53. REMARKS (Continued):

THE PERSON DESIGNATED TO SIGN FOR AN ACTION VERIFIES, BASED ON PERSONAL OBSERVATION OR CERTIFIED RECORDS, AND CERTIFIES BY THEIR SIGNATURE THAT THE ACTION HAS BEEN PERFORMED IN ACCORDANCE WITH THE SPECIFIED REQUIREMENTS.

WELDING IN PROCESS CONTROL/NONDESTRUCTIVE TEST RECORD
QA FORM 20 (FRONT)
When the form is used for production welding, the blocks marked with a ◆ must be completed by the planner.

◆1. PAGE 1 OF 2

◆2. SHIP USS BLUE RIDGE HULL NO. LCC19	◆3. JCN EM01-L261	◆4. CWP/REC SER. NO. N/A	◆5. LWC KTR	◆6. DATE 5 Apr 2025
◆7. SYSTEM Main Turbine Drain System	◆8. COMPONENT HP Turbine 1ST Stage Steam Gage Piping	◆9. DWG NO. Mapping Plan Enclosure-02	◆10. CWP STEP NO. 5.7.2.3	
◆11. JOINT ID PJ-1C	◆12. JOINT DESIGN P-14	13. INST LOCATION: [ ] STBD COMPT: [ ] C/L FR: [ ] PORT	14. WELDED LOCATION: [ ] SHOP [ ] FIELD	

BASE MATERIAL DATA

15. COMP DATA	16. MATERIAL	17. SIZE	18. THICKNESS	19. MATL SPEC	20. MIC NO.
COMPONENT A:					
COMPONENT B:					
21. [ ] SEAL RING [ ] BACK RING/STRIP	22. MATERIAL	23. SIZE	24. THICKNESS	25. MATL SPEC	26. MIC NO.

WELDING MATERIAL SPECIFICATIONS AND DATA

27. TYPE OF FILLER(S)	28. SIZE	29. MATL	30. MIL-SPEC	31. MIC NO.

WELD HISTORY

◆32. WELDING STANDARD: S9074-AR-GIB-010A/278	33. WELDING PROCEDURE:	34. DATA SHEET	35. POSITION: [ ] VERT [ ] HORZ [ ] FLAT [ ] OVHD [ ] FIXED [ ] ROLLED [ ] 45 DEG	
36. ACCESSIBILITY: [ ] 12"OR LESS [ ] UNRESTRICTED	37. PREHEAT TEMP	38. PREHEAT METHOD	39. POST HEAT. TEMP REQD: START TIME: STOP TIME:	
40. PURGE GAS:	41. FLOW RATE	42. SHIELD GAS	43. FLOW RATE	44. CUP SIZE / 45. TUNGSTEN SIZE

46. WELD LAYER	47. PROCESS	48. QUAL EXP DATE	49. AMPS	50. INTERPASS TEMP	51. WELDER SIGNATURE	52. DATE

53. INSPECTION DATA CONTAINED ON REVERSE OF THIS PAGE
REMARKS:

94. FINAL DISPOSITION: [ ] ACCEPT [ ] REJECT	95. NDT SUPERVISOR	DATE

THE PERSON DESIGNATED TO SIGN FOR AN ACTION VERIFIES, BASED ON PERSONAL OBSERVATION OR CERTIFIED RECORDS, AND CERTIFIES BY THEIR SIGNATURE THAT THE ACTION HAS BEEN PERFORMED IN ACCORDANCE WITH THE SPECIFIED REQUIREMENTS.

WELDING IN PROCESS CONTROL/NONDESTRUCTIVE TEST RECORD
QA FORM 20 (BACK)

NDT INSPECTION DATA

54. INSPECTION STANDARD	55. WELD CLASS	56. ACCEPTANCE STANDARD	57. ACCEPT CLASS

58. WELD PREP	59. INSP METHOD	60. ACCEPT/REJECT	61. NDT INSPECTOR SIGNATURE	62. DATE
COMPONENT A		[ ] ACCEPT [ ] REJECT		
COMPONENT B		[ ] ACCEPT [ ] REJECT		
63. JOINT FITUP		[ ] ACCEPT [ ] REJECT		

64. INSP LAYER	65. INSP METHOD	66. INSP PROC NO	67. ACCEPT/REJECT	68. NDT INSPECTOR SIGNATURE	69. DATE
			[ ] ACCEPT [ ] REJECT		
			[ ] ACCEPT [ ] REJECT		
			[ ] ACCEPT [ ] REJECT		
			[ ] ACCEPT [ ] REJECT		
			[ ] ACCEPT [ ] REJECT		

70. NDT INSPECTION DATA REPAIR NO._____ Defect: L W D

71. Repair Method: Excavation: L W D

72. INSP LAYER	73. INSP METHOD	74. INSP PROC NO.	75. ACCEPT/REJECT	76. NDT INSPECTOR SIGNATURE	77. DATE
			[ ] ACCEPT [ ] REJECT		
			[ ] ACCEPT [ ] REJECT		

78. NDT INSPECTION DATA REPAIR NO._____ Defect: L W D

79. Repair Method: Excavation: L W D

80. INSP LAYER	81. INSP METHOD	82. INSP PROC NO.	83. ACCEPT/REJECT	84. NDT INSPECTOR SIGNATURE	85. DATE
			[ ] ACCEPT [ ] REJECT		
			[ ] ACCEPT [ ] REJECT		

86. NDT INSPECTION DATA REPAIR NO._____ Defect: L W D

87. Repair Method: Excavation: L W D

88. INSP LAYER	89. INSP METHOD	90. INSP PROC NO.	91. ACCEPT/REJECT	92. NDT INSPECTOR SIGNATURE	93. DATE
			[ ] ACCEPT [ ] REJECT		
			[ ] ACCEPT [ ] REJECT		

53. REMARKS (Continued):

THE PERSON DESIGNATED TO SIGN FOR AN ACTION VERIFIES, BASED ON PERSONAL OBSERVATION OR CERTIFIED RECORDS, AND CERTIFIES BY THEIR SIGNATURE THAT THE ACTION HAS BEEN PERFORMED IN ACCORDANCE WITH THE SPECIFIED REQUIREMENTS.

WELDING IN PROCESS CONTROL/NONDESTRUCTIVE TEST RECORD
QA FORM 20 (FRONT)
When the form is used for production welding, the blocks marked with a ◆ must be completed by the planner.

◆1. PAGE 1 OF 2

◆2. SHIP USS BLUE RIDGE HULL NO. LCC19	◆3. JCN EM01-L261	◆4. CWP/REC SER. NO. N/A	◆5. LWC KTR	◆6. DATE 5 Apr 2025
◆7. SYSTEM Main Turbine Drain System	◆8. COMPONENT HP Turbine 1ST Stage Steam Gage Piping	◆9. DWG NO. Mapping Plan Enclosure-02	◆10. CWP STEP NO. 5.7.2.3	
◆11. JOINT ID PJ-2C	◆12. JOINT DESIGN P-14	13. INST LOCATION: [ ] STBD COMPT: [ ] C/L FR: [ ] PORT	14. WELDED LOCATION: [ ] SHOP [ ] FIELD	

BASE MATERIAL DATA

15. COMP DATA	16. MATERIAL	17. SIZE	18. THICKNESS	19. MATL SPEC	20. MIC NO.
COMPONENT A:					
COMPONENT B:					
21. [ ] SEAL RING [ ] BACK RING/STRIP	22. MATERIAL	23. SIZE	24. THICKNESS	25. MATL SPEC	26. MIC NO.

WELDING MATERIAL SPECIFICATIONS AND DATA

27. TYPE OF FILLER(S)	28. SIZE	29. MATL	30. MIL-SPEC	31. MIC NO.

WELD HISTORY

◆32. WELDING STANDARD: S9074-AR-GIB-010A/278	33. WELDING PROCEDURE:	34. DATA SHEET	35. POSITION: [ ] VERT [ ] HORZ [ ] FLAT [ ] OVHD [ ] FIXED [ ] ROLLED [ ] 45 DEG	
36. ACCESSIBILITY: [ ] 12"OR LESS [ ] UNRESTRICTED	37. PREHEAT TEMP	38. PREHEAT METHOD	39. POST HEAT. TEMP REQD: START TIME: STOP TIME:	
40. PURGE GAS:	41. FLOW RATE	42. SHIELD GAS	43. FLOW RATE	44. CUP SIZE / 45. TUNGSTEN SIZE

46. WELD LAYER	47. PROCESS	48. QUAL EXP DATE	49. AMPS	50. INTERPASS TEMP	51. WELDER SIGNATURE	52. DATE

53. INSPECTION DATA CONTAINED ON REVERSE OF THIS PAGE
REMARKS:

94. FINAL DISPOSITION: [ ] ACCEPT [ ] REJECT	95. NDT SUPERVISOR	DATE

THE PERSON DESIGNATED TO SIGN FOR AN ACTION VERIFIES, BASED ON PERSONAL OBSERVATION OR CERTIFIED RECORDS, AND CERTIFIES BY THEIR SIGNATURE THAT THE ACTION HAS BEEN PERFORMED IN ACCORDANCE WITH THE SPECIFIED REQUIREMENTS.

WELDING IN PROCESS CONTROL/NONDESTRUCTIVE TEST RECORD
QA FORM 20 (BACK)

NDT INSPECTION DATA

54. INSPECTION STANDARD	55. WELD CLASS	56. ACCEPTANCE STANDARD	57. ACCEPT CLASS

58. WELD PREP	59. INSP METHOD	60. ACCEPT/REJECT	61. NDT INSPECTOR SIGNATURE	62. DATE
COMPONENT A		[ ] ACCEPT [ ] REJECT		
COMPONENT B		[ ] ACCEPT [ ] REJECT		
63. JOINT FITUP		[ ] ACCEPT [ ] REJECT		

64. INSP LAYER	65. INSP METHOD	66. INSP PROC NO	67. ACCEPT/REJECT	68. NDT INSPECTOR SIGNATURE	69. DATE
			[ ] ACCEPT [ ] REJECT		
			[ ] ACCEPT [ ] REJECT		
			[ ] ACCEPT [ ] REJECT		
			[ ] ACCEPT [ ] REJECT		
			[ ] ACCEPT [ ] REJECT		

70. NDT INSPECTION DATA REPAIR NO._____ Defect: L W D

71. Repair Method: Excavation: L W D

72. INSP LAYER	73. INSP METHOD	74. INSP PROC NO.	75. ACCEPT/REJECT	76. NDT INSPECTOR SIGNATURE	77. DATE
			[ ] ACCEPT [ ] REJECT		
			[ ] ACCEPT [ ] REJECT		

78. NDT INSPECTION DATA REPAIR NO._____ Defect: L W D

79. Repair Method: Excavation: L W D

80. INSP LAYER	81. INSP METHOD	82. INSP PROC NO.	83. ACCEPT/REJECT	84. NDT INSPECTOR SIGNATURE	85. DATE
			[ ] ACCEPT [ ] REJECT		
			[ ] ACCEPT [ ] REJECT		

86. NDT INSPECTION DATA REPAIR NO._____ Defect: L W D

87. Repair Method: Excavation: L W D

88. INSP LAYER	89. INSP METHOD	90. INSP PROC NO.	91. ACCEPT/REJECT	92. NDT INSPECTOR SIGNATURE	93. DATE
			[ ] ACCEPT [ ] REJECT		
			[ ] ACCEPT [ ] REJECT		

53. REMARKS (Continued):

THE PERSON DESIGNATED TO SIGN FOR AN ACTION VERIFIES, BASED ON PERSONAL OBSERVATION OR CERTIFIED RECORDS, AND CERTIFIES BY THEIR SIGNATURE THAT THE ACTION HAS BEEN PERFORMED IN ACCORDANCE WITH THE SPECIFIED REQUIREMENTS.

WELDING IN PROCESS CONTROL/NONDESTRUCTIVE TEST RECORD
QA FORM 20 (FRONT)
When the form is used for production welding, the blocks marked with a ◆ must be completed by the planner.

◆1. PAGE 1 OF 2

◆2. SHIP USS BLUE RIDGE HULL NO. LCC19	◆3. JCN EM01-L261	◆4. CWP/REC SER. NO. N/A	◆5. LWC KTR	◆6. DATE 5 Apr 2025
◆7. SYSTEM Main Turbine Drain System	◆8. COMPONENT HP Turbine 1ST Stage Steam Gage Piping	◆9. DWG NO. Mapping Plan Enclosure-02	◆10. CWP STEP NO. 5.7.2.3	
◆11. JOINT ID PJ-3C	◆12. JOINT DESIGN P-17	13. INST LOCATION: [ ] STBD COMPT: [ ] C/L FR: [ ] PORT	14. WELDED LOCATION: [ ] SHOP [ ] FIELD	

BASE MATERIAL DATA

15. COMP DATA	16. MATERIAL	17. SIZE	18. THICKNESS	19. MATL SPEC	20. MIC NO.
COMPONENT A:					
COMPONENT B:					
21. [ ] SEAL RING [ ] BACK RING/STRIP	22. MATERIAL	23. SIZE	24. THICKNESS	25. MATL SPEC	26. MIC NO.

WELDING MATERIAL SPECIFICATIONS AND DATA

27. TYPE OF FILLER(S)	28. SIZE	29. MATL	30. MIL-SPEC	31. MIC NO.

WELD HISTORY

◆32. WELDING STANDARD: S9074-AR-GIB-010A/278	33. WELDING PROCEDURE:	34. DATA SHEET	35. POSITION: [ ] VERT [ ] HORZ [ ] FLAT [ ] OVHD [ ] FIXED [ ] ROLLED [ ] 45 DEG	
36. ACCESSIBILITY: [ ] 12"OR LESS [ ] UNRESTRICTED	37. PREHEAT TEMP	38. PREHEAT METHOD	39. POST HEAT. TEMP REQD: START TIME: STOP TIME:	
40. PURGE GAS:	41. FLOW RATE	42. SHIELD GAS	43. FLOW RATE	44. CUP SIZE / 45. TUNGSTEN SIZE

46. WELD LAYER	47. PROCESS	48. QUAL EXP DATE	49. AMPS	50. INTERPASS TEMP	51. WELDER SIGNATURE	52. DATE

53. INSPECTION DATA CONTAINED ON REVERSE OF THIS PAGE
REMARKS:

94. FINAL DISPOSITION: [ ] ACCEPT [ ] REJECT	95. NDT SUPERVISOR	DATE

THE PERSON DESIGNATED TO SIGN FOR AN ACTION VERIFIES, BASED ON PERSONAL OBSERVATION OR CERTIFIED RECORDS, AND CERTIFIES BY THEIR SIGNATURE THAT THE ACTION HAS BEEN PERFORMED IN ACCORDANCE WITH THE SPECIFIED REQUIREMENTS.

WELDING IN PROCESS CONTROL/NONDESTRUCTIVE TEST RECORD
QA FORM 20 (BACK) PAGE 2 OF 2

NDT INSPECTION DATA

54. INSPECTION STANDARD	55. WELD CLASS	56. ACCEPTANCE STANDARD	57. ACCEPT CLASS

58. WELD PREP	59. INSP METHOD	60. ACCEPT/REJECT	61. NDT INSPECTOR SIGNATURE	62. DATE
COMPONENT A		[ ] ACCEPT [ ] REJECT		
COMPONENT B		[ ] ACCEPT [ ] REJECT		
63. JOINT FITUP		[ ] ACCEPT [ ] REJECT		

64. INSP LAYER	65. INSP METHOD	66. INSP PROC NO	67. ACCEPT/REJECT	68. NDT INSPECTOR SIGNATURE	69. DATE
			[ ] ACCEPT [ ] REJECT		
			[ ] ACCEPT [ ] REJECT		
			[ ] ACCEPT [ ] REJECT		
			[ ] ACCEPT [ ] REJECT		
			[ ] ACCEPT [ ] REJECT		

70. NDT INSPECTION DATA REPAIR NO._____ Defect: L W D

71. Repair Method: Excavation: L W D

72. INSP LAYER	73. INSP METHOD	74. INSP PROC NO.	75. ACCEPT/REJECT	76. NDT INSPECTOR SIGNATURE	77. DATE
			[ ] ACCEPT [ ] REJECT		
			[ ] ACCEPT [ ] REJECT		

78. NDT INSPECTION DATA REPAIR NO._____ Defect: L W D

79. Repair Method: Excavation: L W D

80. INSP LAYER	81. INSP METHOD	82. INSP PROC NO.	83. ACCEPT/REJECT	84. NDT INSPECTOR SIGNATURE	85. DATE
			[ ] ACCEPT [ ] REJECT		
			[ ] ACCEPT [ ] REJECT		

86. NDT INSPECTION DATA REPAIR NO._____ Defect: L W D

87. Repair Method: Excavation: L W D

88. INSP LAYER	89. INSP METHOD	90. INSP PROC NO.	91. ACCEPT/REJECT	92. NDT INSPECTOR SIGNATURE	93. DATE
			[ ] ACCEPT [ ] REJECT		
			[ ] ACCEPT [ ] REJECT		

53. REMARKS (Continued):

THE PERSON DESIGNATED TO SIGN FOR AN ACTION VERIFIES, BASED ON PERSONAL OBSERVATION OR CERTIFIED RECORDS, AND CERTIFIES BY THEIR SIGNATURE THAT THE ACTION HAS BEEN PERFORMED IN ACCORDANCE WITH THE SPECIFIED REQUIREMENTS.

WELDING IN PROCESS CONTROL/NONDESTRUCTIVE TEST RECORD
QA FORM 20 (FRONT)
When the form is used for production welding, the blocks marked with a ◆ must be completed by the planner.

◆1. PAGE 1 OF 2

◆2. SHIP USS BLUE RIDGE HULL NO. LCC19	◆3. JCN EM01-L261	◆4. CWP/REC SER. NO. N/A	◆5. LWC KTR	◆6. DATE 5 Apr 2025
◆7. SYSTEM Main Turbine Drain System	◆8. COMPONENT HP Turbine 1ST Stage Steam Gage Piping	◆9. DWG NO. Mapping Plan Enclosure-02	◆10. CWP STEP NO. 5.7.2.3	
◆11. JOINT ID PJ-4C	◆12. JOINT DESIGN P-17	13. INST LOCATION: [ ] STBD COMPT: [ ] C/L FR: [ ] PORT	14. WELDED LOCATION: [ ] SHOP [ ] FIELD	

BASE MATERIAL DATA

15. COMP DATA	16. MATERIAL	17. SIZE	18. THICKNESS	19. MATL SPEC	20. MIC NO.
COMPONENT A:					
COMPONENT B:					
21. [ ] SEAL RING [ ] BACK RING/STRIP	22. MATERIAL	23. SIZE	24. THICKNESS	25. MATL SPEC	26. MIC NO.

WELDING MATERIAL SPECIFICATIONS AND DATA

27. TYPE OF FILLER(S)	28. SIZE	29. MATL	30. MIL-SPEC	31. MIC NO.

WELD HISTORY

◆32. WELDING STANDARD: S9074-AR-GIB-010A/278	33. WELDING PROCEDURE:	34. DATA SHEET	35. POSITION: [ ] VERT [ ] HORZ [ ] FLAT [ ] OVHD [ ] FIXED [ ] ROLLED [ ] 45 DEG	
36. ACCESSIBILITY: [ ] 12"OR LESS [ ] UNRESTRICTED	37. PREHEAT TEMP	38. PREHEAT METHOD	39. POST HEAT. TEMP REQD: START TIME: STOP TIME:	
40. PURGE GAS:	41. FLOW RATE	42. SHIELD GAS	43. FLOW RATE	44. CUP SIZE / 45. TUNGSTEN SIZE

46. WELD LAYER	47. PROCESS	48. QUAL EXP DATE	49. AMPS	50. INTERPASS TEMP	51. WELDER SIGNATURE	52. DATE

53. INSPECTION DATA CONTAINED ON REVERSE OF THIS PAGE
REMARKS:

94. FINAL DISPOSITION: [ ] ACCEPT [ ] REJECT	95. NDT SUPERVISOR	DATE

THE PERSON DESIGNATED TO SIGN FOR AN ACTION VERIFIES, BASED ON PERSONAL OBSERVATION OR CERTIFIED RECORDS, AND CERTIFIES BY THEIR SIGNATURE THAT THE ACTION HAS BEEN PERFORMED IN ACCORDANCE WITH THE SPECIFIED REQUIREMENTS.

WELDING IN PROCESS CONTROL/NONDESTRUCTIVE TEST RECORD
QA FORM 20 (BACK)

NDT INSPECTION DATA

54. INSPECTION STANDARD	55. WELD CLASS	56. ACCEPTANCE STANDARD	57. ACCEPT CLASS

58. WELD PREP	59. INSP METHOD	60. ACCEPT/REJECT	61. NDT INSPECTOR SIGNATURE	62. DATE
COMPONENT A		[ ] ACCEPT [ ] REJECT		
COMPONENT B		[ ] ACCEPT [ ] REJECT		
63. JOINT FITUP		[ ] ACCEPT [ ] REJECT		

64. INSP LAYER	65. INSP METHOD	66. INSP PROC NO	67. ACCEPT/REJECT	68. NDT INSPECTOR SIGNATURE	69. DATE
			[ ] ACCEPT [ ] REJECT		
			[ ] ACCEPT [ ] REJECT		
			[ ] ACCEPT [ ] REJECT		
			[ ] ACCEPT [ ] REJECT		
			[ ] ACCEPT [ ] REJECT		

70. NDT INSPECTION DATA REPAIR NO._____ Defect: L W D

71. Repair Method: Excavation: L W D

72. INSP LAYER	73. INSP METHOD	74. INSP PROC NO.	75. ACCEPT/REJECT	76. NDT INSPECTOR SIGNATURE	77. DATE
			[ ] ACCEPT [ ] REJECT		
			[ ] ACCEPT [ ] REJECT		

78. NDT INSPECTION DATA REPAIR NO._____ Defect: L W D

79. Repair Method: Excavation: L W D

80. INSP LAYER	81. INSP METHOD	82. INSP PROC NO.	83. ACCEPT/REJECT	84. NDT INSPECTOR SIGNATURE	85. DATE
			[ ] ACCEPT [ ] REJECT		
			[ ] ACCEPT [ ] REJECT		

86. NDT INSPECTION DATA REPAIR NO._____ Defect: L W D

87. Repair Method: Excavation: L W D

88. INSP LAYER	89. INSP METHOD	90. INSP PROC NO.	91. ACCEPT/REJECT	92. NDT INSPECTOR SIGNATURE	93. DATE
			[ ] ACCEPT [ ] REJECT		
			[ ] ACCEPT [ ] REJECT		

53. REMARKS (Continued):

THE PERSON DESIGNATED TO SIGN FOR AN ACTION VERIFIES, BASED ON PERSONAL OBSERVATION OR CERTIFIED RECORDS, AND CERTIFIES BY THEIR SIGNATURE THAT THE ACTION HAS BEEN PERFORMED IN ACCORDANCE WITH THE SPECIFIED REQUIREMENTS.

WELDING IN PROCESS CONTROL/NONDESTRUCTIVE TEST RECORD
QA FORM 20 (FRONT)
When the form is used for production welding, the blocks marked with a ◆ must be completed by the planner.

◆1. PAGE 1 OF 2

◆2. SHIP USS BLUE RIDGE HULL NO. LCC19	◆3. JCN EM01-L261	◆4. CWP/REC SER. NO. N/A	◆5. LWC KTR	◆6. DATE 5 Apr 2025
◆7. SYSTEM Main Turbine Drain System	◆8. COMPONENT HP Turbine 1ST Stage Steam Gage Piping	◆9. DWG NO. Mapping Plan Enclosure-02	◆10. CWP STEP NO. 5.7.2.3	
◆11. JOINT ID PJ-5C	◆12. JOINT DESIGN P-14	13. INST LOCATION: [ ] STBD COMPT: [ ] C/L FR: [ ] PORT	14. WELDED LOCATION: [ ] SHOP [ ] FIELD	

BASE MATERIAL DATA

15. COMP DATA	16. MATERIAL	17. SIZE	18. THICKNESS	19. MATL SPEC	20. MIC NO.
COMPONENT A:					
COMPONENT B:					
21. [ ] SEAL RING [ ] BACK RING/STRIP	22. MATERIAL	23. SIZE	24. THICKNESS	25. MATL SPEC	26. MIC NO.

WELDING MATERIAL SPECIFICATIONS AND DATA

27. TYPE OF FILLER(S)	28. SIZE	29. MATL	30. MIL-SPEC	31. MIC NO.

WELD HISTORY

◆32. WELDING STANDARD: S9074-AR-GIB-010A/278	33. WELDING PROCEDURE:	34. DATA SHEET	35. POSITION: [ ] VERT [ ] HORZ [ ] FLAT [ ] OVHD [ ] FIXED [ ] ROLLED [ ] 45 DEG	
36. ACCESSIBILITY: [ ] 12"OR LESS [ ] UNRESTRICTED	37. PREHEAT TEMP	38. PREHEAT METHOD	39. POST HEAT. TEMP REQD: START TIME: STOP TIME:	
40. PURGE GAS:	41. FLOW RATE	42. SHIELD GAS	43. FLOW RATE	44. CUP SIZE / 45. TUNGSTEN SIZE

46. WELD LAYER	47. PROCESS	48. QUAL EXP DATE	49. AMPS	50. INTERPASS TEMP	51. WELDER SIGNATURE	52. DATE

53. INSPECTION DATA CONTAINED ON REVERSE OF THIS PAGE
REMARKS:

94. FINAL DISPOSITION: [ ] ACCEPT [ ] REJECT	95. NDT SUPERVISOR	DATE

THE PERSON DESIGNATED TO SIGN FOR AN ACTION VERIFIES, BASED ON PERSONAL OBSERVATION OR CERTIFIED RECORDS, AND CERTIFIES BY THEIR SIGNATURE THAT THE ACTION HAS BEEN PERFORMED IN ACCORDANCE WITH THE SPECIFIED REQUIREMENTS.

WELDING IN PROCESS CONTROL/NONDESTRUCTIVE TEST RECORD
QA FORM 20 (BACK)

NDT INSPECTION DATA

54. INSPECTION STANDARD	55. WELD CLASS	56. ACCEPTANCE STANDARD	57. ACCEPT CLASS

58. WELD PREP	59. INSP METHOD	60. ACCEPT/REJECT	61. NDT INSPECTOR SIGNATURE	62. DATE
COMPONENT A		[ ] ACCEPT [ ] REJECT		
COMPONENT B		[ ] ACCEPT [ ] REJECT		
63. JOINT FITUP		[ ] ACCEPT [ ] REJECT		

64. INSP LAYER	65. INSP METHOD	66. INSP PROC NO	67. ACCEPT/REJECT	68. NDT INSPECTOR SIGNATURE	69. DATE
			[ ] ACCEPT [ ] REJECT		
			[ ] ACCEPT [ ] REJECT		
			[ ] ACCEPT [ ] REJECT		
			[ ] ACCEPT [ ] REJECT		
			[ ] ACCEPT [ ] REJECT		

70. NDT INSPECTION DATA REPAIR NO._____ Defect: L W D

71. Repair Method: Excavation: L W D

72. INSP LAYER	73. INSP METHOD	74. INSP PROC NO.	75. ACCEPT/REJECT	76. NDT INSPECTOR SIGNATURE	77. DATE
			[ ] ACCEPT [ ] REJECT		
			[ ] ACCEPT [ ] REJECT		

78. NDT INSPECTION DATA REPAIR NO._____ Defect: L W D

79. Repair Method: Excavation: L W D

80. INSP LAYER	81. INSP METHOD	82. INSP PROC NO.	83. ACCEPT/REJECT	84. NDT INSPECTOR SIGNATURE	85. DATE
			[ ] ACCEPT [ ] REJECT		
			[ ] ACCEPT [ ] REJECT		

86. NDT INSPECTION DATA REPAIR NO._____ Defect: L W D

87. Repair Method: Excavation: L W D

88. INSP LAYER	89. INSP METHOD	90. INSP PROC NO.	91. ACCEPT/REJECT	92. NDT INSPECTOR SIGNATURE	93. DATE
			[ ] ACCEPT [ ] REJECT		
			[ ] ACCEPT [ ] REJECT		

53. REMARKS (Continued):

THE PERSON DESIGNATED TO SIGN FOR AN ACTION VERIFIES, BASED ON PERSONAL OBSERVATION OR CERTIFIED RECORDS, AND CERTIFIES BY THEIR SIGNATURE THAT THE ACTION HAS BEEN PERFORMED IN ACCORDANCE WITH THE SPECIFIED REQUIREMENTS.

WELDING IN PROCESS CONTROL/NONDESTRUCTIVE TEST RECORD
QA FORM 20 (FRONT)
When the form is used for production welding, the blocks marked with a ◆ must be completed by the planner.

◆1. PAGE 1 OF 2

◆2. SHIP USS BLUE RIDGE HULL NO. LCC19	◆3. JCN EM01-L261	◆4. CWP/REC SER. NO. N/A	◆5. LWC KTR	◆6. DATE 5 Apr 2025
◆7. SYSTEM Main Turbine Drain System	◆8. COMPONENT HP Turbine 1ST Stage Steam Gage Piping	◆9. DWG NO. Mapping Plan Enclosure-02	◆10. CWP STEP NO. 5.7.2.3	
◆11. JOINT ID PJ-6C	◆12. JOINT DESIGN P-14	13. INST LOCATION: [ ] STBD COMPT: [ ] C/L FR: [ ] PORT	14. WELDED LOCATION: [ ] SHOP [ ] FIELD	

BASE MATERIAL DATA

15. COMP DATA	16. MATERIAL	17. SIZE	18. THICKNESS	19. MATL SPEC	20. MIC NO.
COMPONENT A:					
COMPONENT B:					
21. [ ] SEAL RING [ ] BACK RING/STRIP	22. MATERIAL	23. SIZE	24. THICKNESS	25. MATL SPEC	26. MIC NO.

WELDING MATERIAL SPECIFICATIONS AND DATA

27. TYPE OF FILLER(S)	28. SIZE	29. MATL	30. MIL-SPEC	31. MIC NO.

WELD HISTORY

◆32. WELDING STANDARD: S9074-AR-GIB-010A/278	33. WELDING PROCEDURE:	34. DATA SHEET	35. POSITION: [ ] VERT [ ] HORZ [ ] FLAT [ ] OVHD [ ] FIXED [ ] ROLLED [ ] 45 DEG	
36. ACCESSIBILITY: [ ] 12"OR LESS [ ] UNRESTRICTED	37. PREHEAT TEMP	38. PREHEAT METHOD	39. POST HEAT. TEMP REQD: START TIME: STOP TIME:	
40. PURGE GAS:	41. FLOW RATE	42. SHIELD GAS	43. FLOW RATE	44. CUP SIZE / 45. TUNGSTEN SIZE

46. WELD LAYER	47. PROCESS	48. QUAL EXP DATE	49. AMPS	50. INTERPASS TEMP	51. WELDER SIGNATURE	52. DATE

53. INSPECTION DATA CONTAINED ON REVERSE OF THIS PAGE
REMARKS:

94. FINAL DISPOSITION: [ ] ACCEPT [ ] REJECT	95. NDT SUPERVISOR DATE

THE PERSON DESIGNATED TO SIGN FOR AN ACTION VERIFIES, BASED ON PERSONAL OBSERVATION OR CERTIFIED RECORDS, AND CERTIFIES BY THEIR SIGNATURE THAT THE ACTION HAS BEEN PERFORMED IN ACCORDANCE WITH THE SPECIFIED REQUIREMENTS.

WELDING IN PROCESS CONTROL/NONDESTRUCTIVE TEST RECORD
QA FORM 20 (BACK)

NDT INSPECTION DATA

54. INSPECTION STANDARD	55. WELD CLASS	56. ACCEPTANCE STANDARD	57. ACCEPT CLASS

58. WELD PREP	59. INSP METHOD	60. ACCEPT/REJECT	61. NDT INSPECTOR SIGNATURE	62. DATE
COMPONENT A		[ ] ACCEPT [ ] REJECT		
COMPONENT B		[ ] ACCEPT [ ] REJECT		
63. JOINT FITUP		[ ] ACCEPT [ ] REJECT		

64. INSP LAYER	65. INSP METHOD	66. INSP PROC NO	67. ACCEPT/REJECT	68. NDT INSPECTOR SIGNATURE	69. DATE
			[ ] ACCEPT [ ] REJECT		
			[ ] ACCEPT [ ] REJECT		
			[ ] ACCEPT [ ] REJECT		
			[ ] ACCEPT [ ] REJECT		
			[ ] ACCEPT [ ] REJECT		

70. NDT INSPECTION DATA REPAIR NO._____ Defect: L W D

71. Repair Method: Excavation: L W D

72. INSP LAYER	73. INSP METHOD	74. INSP PROC NO.	75. ACCEPT/REJECT	76. NDT INSPECTOR SIGNATURE	77. DATE
			[ ] ACCEPT [ ] REJECT		
			[ ] ACCEPT [ ] REJECT		

78. NDT INSPECTION DATA REPAIR NO._____ Defect: L W D

79. Repair Method: Excavation: L W D

80. INSP LAYER	81. INSP METHOD	82. INSP PROC NO.	83. ACCEPT/REJECT	84. NDT INSPECTOR SIGNATURE	85. DATE
			[ ] ACCEPT [ ] REJECT		
			[ ] ACCEPT [ ] REJECT		

86. NDT INSPECTION DATA REPAIR NO._____ Defect: L W D

87. Repair Method: Excavation: L W D

88. INSP LAYER	89. INSP METHOD	90. INSP PROC NO.	91. ACCEPT/REJECT	92. NDT INSPECTOR SIGNATURE	93. DATE
			[ ] ACCEPT [ ] REJECT		
			[ ] ACCEPT [ ] REJECT		

53. REMARKS (Continued):

THE PERSON DESIGNATED TO SIGN FOR AN ACTION VERIFIES, BASED ON PERSONAL OBSERVATION OR CERTIFIED RECORDS, AND CERTIFIES BY THEIR SIGNATURE THAT THE ACTION HAS BEEN PERFORMED IN ACCORDANCE WITH THE SPECIFIED REQUIREMENTS.

WELDING IN PROCESS CONTROL/NONDESTRUCTIVE TEST RECORD
QA FORM 20 (FRONT)
When the form is used for production welding, the blocks marked with a ◆ must be completed by the planner.

◆1. PAGE 1 OF 2

◆2. SHIP USS BLUE RIDGE HULL NO. LCC19	◆3. JCN EM01-L261	◆4. CWP/REC SER. NO. N/A	◆5. LWC KTR	◆6. DATE 5 Apr 2025
◆7. SYSTEM Main Turbine Drain System	◆8. COMPONENT LP Turbine Steam Inlet Gage Piping	◆9. DWG NO. Mapping Plan Enclosure-02	◆10. CWP STEP NO. 5.7.2.3	
◆11. JOINT ID PJ-1D	◆12. JOINT DESIGN P-14	13. INST LOCATION: [ ] STBD COMPT: [ ] C/L FR: [ ] PORT	14. WELDED LOCATION: [ ] SHOP [ ] FIELD	

BASE MATERIAL DATA

15. COMP DATA	16. MATERIAL	17. SIZE	18. THICKNESS	19. MATL SPEC	20. MIC NO.
COMPONENT A:					
COMPONENT B:					
21. [ ] SEAL RING [ ] BACK RING/STRIP	22. MATERIAL	23. SIZE	24. THICKNESS	25. MATL SPEC	26. MIC NO.

WELDING MATERIAL SPECIFICATIONS AND DATA

27. TYPE OF FILLER(S)	28. SIZE	29. MATL	30. MIL-SPEC	31. MIC NO.

WELD HISTORY

◆32. WELDING STANDARD: S9074-AR-GIB-010A/278	33. WELDING PROCEDURE:	34. DATA SHEET	35. POSITION: [ ] VERT [ ] HORZ [ ] FLAT [ ] OVHD [ ] FIXED [ ] ROLLED [ ] 45 DEG	
36. ACCESSIBILITY: [ ] 12"OR LESS [ ] UNRESTRICTED	37. PREHEAT TEMP	38. PREHEAT METHOD	39. POST HEAT. TEMP REQD: START TIME: STOP TIME:	
40. PURGE GAS:	41. FLOW RATE	42. SHIELD GAS	43. FLOW RATE	44. CUP SIZE / 45. TUNGSTEN SIZE

46. WELD LAYER	47. PROCESS	48. QUAL EXP DATE	49. AMPS	50. INTERPASS TEMP	51. WELDER SIGNATURE	52. DATE

53. INSPECTION DATA CONTAINED ON REVERSE OF THIS PAGE
REMARKS:

94. FINAL DISPOSITION: [ ] ACCEPT [ ] REJECT	95. NDT SUPERVISOR	DATE

THE PERSON DESIGNATED TO SIGN FOR AN ACTION VERIFIES, BASED ON PERSONAL OBSERVATION OR CERTIFIED RECORDS, AND CERTIFIES BY THEIR SIGNATURE THAT THE ACTION HAS BEEN PERFORMED IN ACCORDANCE WITH THE SPECIFIED REQUIREMENTS.

WELDING IN PROCESS CONTROL/NONDESTRUCTIVE TEST RECORD
QA FORM 20 (BACK)

NDT INSPECTION DATA

54. INSPECTION STANDARD	55. WELD CLASS	56. ACCEPTANCE STANDARD	57. ACCEPT CLASS

58. WELD PREP	59. INSP METHOD	60. ACCEPT/REJECT	61. NDT INSPECTOR SIGNATURE	62. DATE
COMPONENT A		[ ] ACCEPT [ ] REJECT		
COMPONENT B		[ ] ACCEPT [ ] REJECT		
63. JOINT FITUP		[ ] ACCEPT [ ] REJECT		

64. INSP LAYER	65. INSP METHOD	66. INSP PROC NO	67. ACCEPT/REJECT	68. NDT INSPECTOR SIGNATURE	69. DATE
			[ ] ACCEPT [ ] REJECT		
			[ ] ACCEPT [ ] REJECT		
			[ ] ACCEPT [ ] REJECT		
			[ ] ACCEPT [ ] REJECT		
			[ ] ACCEPT [ ] REJECT		

70. NDT INSPECTION DATA REPAIR NO._____ Defect: L W D

71. Repair Method: Excavation: L W D

72. INSP LAYER	73. INSP METHOD	74. INSP PROC NO.	75. ACCEPT/REJECT	76. NDT INSPECTOR SIGNATURE	77. DATE
			[ ] ACCEPT [ ] REJECT		
			[ ] ACCEPT [ ] REJECT		

78. NDT INSPECTION DATA REPAIR NO._____ Defect: L W D

79. Repair Method: Excavation: L W D

80. INSP LAYER	81. INSP METHOD	82. INSP PROC NO.	83. ACCEPT/REJECT	84. NDT INSPECTOR SIGNATURE	85. DATE
			[ ] ACCEPT [ ] REJECT		
			[ ] ACCEPT [ ] REJECT		

86. NDT INSPECTION DATA REPAIR NO._____ Defect: L W D

87. Repair Method: Excavation: L W D

88. INSP LAYER	89. INSP METHOD	90. INSP PROC NO.	91. ACCEPT/REJECT	92. NDT INSPECTOR SIGNATURE	93. DATE
			[ ] ACCEPT [ ] REJECT		
			[ ] ACCEPT [ ] REJECT		

53. REMARKS (Continued):

THE PERSON DESIGNATED TO SIGN FOR AN ACTION VERIFIES, BASED ON PERSONAL OBSERVATION OR CERTIFIED RECORDS, AND CERTIFIES BY THEIR SIGNATURE THAT THE ACTION HAS BEEN PERFORMED IN ACCORDANCE WITH THE SPECIFIED REQUIREMENTS.

WELDING IN PROCESS CONTROL/NONDESTRUCTIVE TEST RECORD
QA FORM 20 (FRONT)
When the form is used for production welding, the blocks marked with a ◆ must be completed by the planner.

◆1. PAGE 1 OF 2

◆2. SHIP USS BLUE RIDGE HULL NO. LCC19	◆3. JCN EM01-L261	◆4. CWP/REC SER. NO. N/A	◆5. LWC KTR	◆6. DATE 5 Apr 2025
◆7. SYSTEM Main Turbine Drain System	◆8. COMPONENT LP Turbine Steam Inlet Gage Piping	◆9. DWG NO. Mapping Plan Enclosure-02	◆10. CWP STEP NO. 5.7.2.3	

◆11. JOINT ID PJ-2D	◆12. JOINT DESIGN P-14	13. INST LOCATION: [ ] STBD COMPT: [ ] C/L FR: [ ] PORT	14. WELDED LOCATION: [ ] SHOP [ ] FIELD

BASE MATERIAL DATA

15. COMP DATA	16. MATERIAL	17. SIZE	18. THICKNESS	19. MATL SPEC	20. MIC NO.
COMPONENT A:					
COMPONENT B:					
21. [ ] SEAL RING [ ] BACK RING/STRIP	22. MATERIAL	23. SIZE	24. THICKNESS	25. MATL SPEC	26. MIC NO.

WELDING MATERIAL SPECIFICATIONS AND DATA

27. TYPE OF FILLER(S)	28. SIZE	29. MATL	30. MIL-SPEC	31. MIC NO.

WELD HISTORY

◆32. WELDING STANDARD: S9074-AR-GIB-010A/278	33. WELDING PROCEDURE:	34. DATA SHEET	35. POSITION: [ ] VERT [ ] FLAT [ ] FIXED [ ] 45 DEG [ ] HORZ [ ] OVHD [ ] ROLLED	
36. ACCESSIBILITY: [ ] 12"OR LESS [ ] UNRESTRICTED	37. PREHEAT TEMP	38. PREHEAT METHOD	39. POST HEAT. START TIME: TEMP REQD: STOP TIME:	

40. PURGE GAS:	41. FLOW RATE	42. SHIELD GAS	43. FLOW RATE	44. CUP SIZE	45. TUNGSTEN SIZE

46. WELD LAYER	47. PROCESS	48. QUAL EXP DATE	49. AMPS	50. INTERPASS TEMP	51. WELDER SIGNATURE	52. DATE

53. INSPECTION DATA CONTAINED ON REVERSE OF THIS PAGE
REMARKS:

94. FINAL DISPOSITION: [ ] ACCEPT [ ] REJECT	95. NDT SUPERVISOR	DATE

THE PERSON DESIGNATED TO SIGN FOR AN ACTION VERIFIES, BASED ON PERSONAL OBSERVATION OR CERTIFIED RECORDS, AND CERTIFIES BY THEIR SIGNATURE THAT THE ACTION HAS BEEN PERFORMED IN ACCORDANCE WITH THE SPECIFIED REQUIREMENTS.

WELDING IN PROCESS CONTROL/NONDESTRUCTIVE TEST RECORD
QA FORM 20 (BACK)

NDT INSPECTION DATA

54. INSPECTION STANDARD	55. WELD CLASS	56. ACCEPTANCE STANDARD	57. ACCEPT CLASS

58. WELD PREP	59. INSP METHOD	60. ACCEPT/REJECT	61. NDT INSPECTOR SIGNATURE	62. DATE
COMPONENT A		[ ] ACCEPT [ ] REJECT		
COMPONENT B		[ ] ACCEPT [ ] REJECT		
63. JOINT FITUP		[ ] ACCEPT [ ] REJECT		

64. INSP LAYER	65. INSP METHOD	66. INSP PROC NO	67. ACCEPT/REJECT	68. NDT INSPECTOR SIGNATURE	69. DATE
			[ ] ACCEPT [ ] REJECT		
			[ ] ACCEPT [ ] REJECT		
			[ ] ACCEPT [ ] REJECT		
			[ ] ACCEPT [ ] REJECT		
			[ ] ACCEPT [ ] REJECT		

70. NDT INSPECTION DATA REPAIR NO._____ Defect: L W D

71. Repair Method: Excavation: L W D

72. INSP LAYER	73. INSP METHOD	74. INSP PROC NO.	75. ACCEPT/REJECT	76. NDT INSPECTOR SIGNATURE	77. DATE
			[ ] ACCEPT [ ] REJECT		
			[ ] ACCEPT [ ] REJECT		

78. NDT INSPECTION DATA REPAIR NO._____ Defect: L W D

79. Repair Method: Excavation: L W D

80. INSP LAYER	81. INSP METHOD	82. INSP PROC NO.	83. ACCEPT/REJECT	84. NDT INSPECTOR SIGNATURE	85. DATE
			[ ] ACCEPT [ ] REJECT		
			[ ] ACCEPT [ ] REJECT		

86. NDT INSPECTION DATA REPAIR NO._____ Defect: L W D

87. Repair Method: Excavation: L W D

88. INSP LAYER	89. INSP METHOD	90. INSP PROC NO.	91. ACCEPT/REJECT	92. NDT INSPECTOR SIGNATURE	93. DATE
			[ ] ACCEPT [ ] REJECT		
			[ ] ACCEPT [ ] REJECT		

53. REMARKS (Continued):

THE PERSON DESIGNATED TO SIGN FOR AN ACTION VERIFIES, BASED ON PERSONAL OBSERVATION OR CERTIFIED RECORDS, AND CERTIFIES BY THEIR SIGNATURE THAT THE ACTION HAS BEEN PERFORMED IN ACCORDANCE WITH THE SPECIFIED REQUIREMENTS.

WELDING IN PROCESS CONTROL/NONDESTRUCTIVE TEST RECORD
QA FORM 20 (FRONT)
When the form is used for production welding, the blocks marked with a ◆ must be completed by the planner.

◆1. PAGE 1 OF 2

◆2. SHIP USS BLUE RIDGE HULL NO. LCC19	◆3. JCN EM01-L261	◆4. CWP/REC SER. NO. N/A	◆5. LWC KTR	◆6. DATE 5 Apr 2025
◆7. SYSTEM Main Turbine Drain System	◆8. COMPONENT LP Turbine Steam Inlet Gage Piping	◆9. DWG NO. Mapping Plan Enclosure-02	◆10. CWP STEP NO. 5.7.2.3	
◆11. JOINT ID PJ-3D	◆12. JOINT DESIGN P-17	13. INST LOCATION: [ ] STBD COMPT: [ ] C/L FR: [ ] PORT	14. WELDED LOCATION: [ ] SHOP [ ] FIELD	

BASE MATERIAL DATA

15. COMP DATA	16. MATERIAL	17. SIZE	18. THICKNESS	19. MATL SPEC	20. MIC NO.
COMPONENT A:					
COMPONENT B:					
21. [ ] SEAL RING [ ] BACK RING/STRIP	22. MATERIAL	23. SIZE	24. THICKNESS	25. MATL SPEC	26. MIC NO.

WELDING MATERIAL SPECIFICATIONS AND DATA

27. TYPE OF FILLER(S)	28. SIZE	29. MATL	30. MIL-SPEC	31. MIC NO.

WELD HISTORY

◆32. WELDING STANDARD: S9074-AR-GIB-010A/278	33. WELDING PROCEDURE:	34. DATA SHEET	35. POSITION: [ ] VERT [ ] HORZ [ ] FLAT [ ] OVHD [ ] FIXED [ ] ROLLED [ ] 45 DEG	
36. ACCESSIBILITY: [ ] 12"OR LESS [ ] UNRESTRICTED	37. PREHEAT TEMP	38. PREHEAT METHOD	39. POST HEAT. TEMP REQD: START TIME: STOP TIME:	
40. PURGE GAS:	41. FLOW RATE	42. SHIELD GAS	43. FLOW RATE	44. CUP SIZE / 45. TUNGSTEN SIZE

46. WELD LAYER	47. PROCESS	48. QUAL EXP DATE	49. AMPS	50. INTERPASS TEMP	51. WELDER SIGNATURE	52. DATE

53. INSPECTION DATA CONTAINED ON REVERSE OF THIS PAGE
REMARKS:

94. FINAL DISPOSITION: [ ] ACCEPT [ ] REJECT	95. NDT SUPERVISOR	DATE

THE PERSON DESIGNATED TO SIGN FOR AN ACTION VERIFIES, BASED ON PERSONAL OBSERVATION OR CERTIFIED RECORDS, AND CERTIFIES BY THEIR SIGNATURE THAT THE ACTION HAS BEEN PERFORMED IN ACCORDANCE WITH THE SPECIFIED REQUIREMENTS.

WELDING IN PROCESS CONTROL/NONDESTRUCTIVE TEST RECORD
QA FORM 20 (BACK)

NDT INSPECTION DATA

54. INSPECTION STANDARD	55. WELD CLASS	56. ACCEPTANCE STANDARD	57. ACCEPT CLASS

58. WELD PREP	59. INSP METHOD	60. ACCEPT/REJECT	61. NDT INSPECTOR SIGNATURE	62. DATE
COMPONENT A		[ ] ACCEPT [ ] REJECT		
COMPONENT B		[ ] ACCEPT [ ] REJECT		
63. JOINT FITUP		[ ] ACCEPT [ ] REJECT		

64. INSP LAYER	65. INSP METHOD	66. INSP PROC NO	67. ACCEPT/REJECT	68. NDT INSPECTOR SIGNATURE	69. DATE
			[ ] ACCEPT [ ] REJECT		
			[ ] ACCEPT [ ] REJECT		
			[ ] ACCEPT [ ] REJECT		
			[ ] ACCEPT [ ] REJECT		
			[ ] ACCEPT [ ] REJECT		

70. NDT INSPECTION DATA REPAIR NO._____ Defect: L W D

71. Repair Method: Excavation: L W D

72. INSP LAYER	73. INSP METHOD	74. INSP PROC NO.	75. ACCEPT/REJECT	76. NDT INSPECTOR SIGNATURE	77. DATE
			[ ] ACCEPT [ ] REJECT		
			[ ] ACCEPT [ ] REJECT		

78. NDT INSPECTION DATA REPAIR NO._____ Defect: L W D

79. Repair Method: Excavation: L W D

80. INSP LAYER	81. INSP METHOD	82. INSP PROC NO.	83. ACCEPT/REJECT	84. NDT INSPECTOR SIGNATURE	85. DATE
			[ ] ACCEPT [ ] REJECT		
			[ ] ACCEPT [ ] REJECT		

86. NDT INSPECTION DATA REPAIR NO._____ Defect: L W D

87. Repair Method: Excavation: L W D

88. INSP LAYER	89. INSP METHOD	90. INSP PROC NO.	91. ACCEPT/REJECT	92. NDT INSPECTOR SIGNATURE	93. DATE
			[ ] ACCEPT [ ] REJECT		
			[ ] ACCEPT [ ] REJECT		

53. REMARKS (Continued):

THE PERSON DESIGNATED TO SIGN FOR AN ACTION VERIFIES, BASED ON PERSONAL OBSERVATION OR CERTIFIED RECORDS, AND CERTIFIES BY THEIR SIGNATURE THAT THE ACTION HAS BEEN PERFORMED IN ACCORDANCE WITH THE SPECIFIED REQUIREMENTS.

WELDING IN PROCESS CONTROL/NONDESTRUCTIVE TEST RECORD
QA FORM 20 (FRONT)
When the form is used for production welding, the blocks marked with a ◆ must be completed by the planner.

◆1. PAGE 1 OF 2

◆2. SHIP USS BLUE RIDGE HULL NO. LCC19	◆3. JCN EM01-L261	◆4. CWP/REC SER. NO. N/A	◆5. LWC KTR	◆6. DATE 5 Apr 2025
◆7. SYSTEM Main Turbine Drain System	◆8. COMPONENT LP Turbine Steam Inlet Gage Piping	◆9. DWG NO. Mapping Plan Enclosure-02	◆10. CWP STEP NO. 5.7.2.3	

◆11. JOINT ID PJ-4D	◆12. JOINT DESIGN P-17	13. INST LOCATION: [ ] STBD COMPT: [ ] C/L FR: [ ] PORT	14. WELDED LOCATION: [ ] SHOP [ ] FIELD

BASE MATERIAL DATA

15. COMP DATA	16. MATERIAL	17. SIZE	18. THICKNESS	19. MATL SPEC	20. MIC NO.
COMPONENT A:					
COMPONENT B:					
21. [ ] SEAL RING [ ] BACK RING/STRIP	22. MATERIAL	23. SIZE	24. THICKNESS	25. MATL SPEC	26. MIC NO.

WELDING MATERIAL SPECIFICATIONS AND DATA

27. TYPE OF FILLER(S)	28. SIZE	29. MATL	30. MIL-SPEC	31. MIC NO.

WELD HISTORY

◆32. WELDING STANDARD: S9074-AR-GIB-010A/278	33. WELDING PROCEDURE:	34. DATA SHEET	35. POSITION: [ ] VERT [ ] FLAT [ ] FIXED [ ] 45 DEG [ ] HORZ [ ] OVHD [ ] ROLLED	
36. ACCESSIBILITY: [ ] 12"OR LESS [ ] UNRESTRICTED	37. PREHEAT TEMP	38. PREHEAT METHOD	39. POST HEAT. START TIME: TEMP REQD: STOP TIME:	

40. PURGE GAS:	41. FLOW RATE	42. SHIELD GAS	43. FLOW RATE	44. CUP SIZE	45. TUNGSTEN SIZE

46. WELD LAYER	47. PROCESS	48. QUAL EXP DATE	49. AMPS	50. INTERPASS TEMP	51. WELDER SIGNATURE	52. DATE

53. INSPECTION DATA CONTAINED ON REVERSE OF THIS PAGE
REMARKS:

94. FINAL DISPOSITION: [ ] ACCEPT [ ] REJECT	95. NDT SUPERVISOR	DATE

THE PERSON DESIGNATED TO SIGN FOR AN ACTION VERIFIES, BASED ON PERSONAL OBSERVATION OR CERTIFIED RECORDS, AND CERTIFIES BY THEIR SIGNATURE THAT THE ACTION HAS BEEN PERFORMED IN ACCORDANCE WITH THE SPECIFIED REQUIREMENTS.

WELDING IN PROCESS CONTROL/NONDESTRUCTIVE TEST RECORD
QA FORM 20 (BACK)

NDT INSPECTION DATA

54. INSPECTION STANDARD	55. WELD CLASS	56. ACCEPTANCE STANDARD	57. ACCEPT CLASS

58. WELD PREP	59. INSP METHOD	60. ACCEPT/REJECT	61. NDT INSPECTOR SIGNATURE	62. DATE
COMPONENT A		[ ] ACCEPT [ ] REJECT		
COMPONENT B		[ ] ACCEPT [ ] REJECT		
63. JOINT FITUP		[ ] ACCEPT [ ] REJECT		

64. INSP LAYER	65. INSP METHOD	66. INSP PROC NO	67. ACCEPT/REJECT	68. NDT INSPECTOR SIGNATURE	69. DATE
			[ ] ACCEPT [ ] REJECT		
			[ ] ACCEPT [ ] REJECT		
			[ ] ACCEPT [ ] REJECT		
			[ ] ACCEPT [ ] REJECT		
			[ ] ACCEPT [ ] REJECT		

70. NDT INSPECTION DATA REPAIR NO._____ Defect: L W D

71. Repair Method: Excavation: L W D

72. INSP LAYER	73. INSP METHOD	74. INSP PROC NO.	75. ACCEPT/REJECT	76. NDT INSPECTOR SIGNATURE	77. DATE
			[ ] ACCEPT [ ] REJECT		
			[ ] ACCEPT [ ] REJECT		

78. NDT INSPECTION DATA REPAIR NO._____ Defect: L W D

79. Repair Method: Excavation: L W D

80. INSP LAYER	81. INSP METHOD	82. INSP PROC NO.	83. ACCEPT/REJECT	84. NDT INSPECTOR SIGNATURE	85. DATE
			[ ] ACCEPT [ ] REJECT		
			[ ] ACCEPT [ ] REJECT		

86. NDT INSPECTION DATA REPAIR NO._____ Defect: L W D

87. Repair Method: Excavation: L W D

88. INSP LAYER	89. INSP METHOD	90. INSP PROC NO.	91. ACCEPT/REJECT	92. NDT INSPECTOR SIGNATURE	93. DATE
			[ ] ACCEPT [ ] REJECT		
			[ ] ACCEPT [ ] REJECT		

53. REMARKS (Continued):

THE PERSON DESIGNATED TO SIGN FOR AN ACTION VERIFIES, BASED ON PERSONAL OBSERVATION OR CERTIFIED RECORDS, AND CERTIFIES BY THEIR SIGNATURE THAT THE ACTION HAS BEEN PERFORMED IN ACCORDANCE WITH THE SPECIFIED REQUIREMENTS.

WELDING IN PROCESS CONTROL/NONDESTRUCTIVE TEST RECORD
QA FORM 20 (FRONT)
When the form is used for production welding, the blocks marked with a ◆ must be completed by the planner.

◆1. PAGE 1 OF 2

◆2. SHIP USS BLUE RIDGE HULL NO. LCC19	◆3. JCN EM01-L261	◆4. CWP/REC SER. NO. N/A	◆5. LWC KTR	◆6. DATE 5 Apr 2025
◆7. SYSTEM Main Turbine Drain System	◆8. COMPONENT LP Turbine Steam Inlet Gage Piping	◆9. DWG NO. Mapping Plan Enclosure-02	◆10. CWP STEP NO. 5.7.2.3	

◆11. JOINT ID PJ-5D	◆12. JOINT DESIGN P-14	13. INST LOCATION: [ ] STBD COMPT: [ ] C/L FR: [ ] PORT	14. WELDED LOCATION: [ ] SHOP [ ] FIELD

BASE MATERIAL DATA

15. COMP DATA	16. MATERIAL	17. SIZE	18. THICKNESS	19. MATL SPEC	20. MIC NO.
COMPONENT A:					
COMPONENT B:					
21. [ ] SEAL RING [ ] BACK RING/STRIP	22. MATERIAL	23. SIZE	24. THICKNESS	25. MATL SPEC	26. MIC NO.

WELDING MATERIAL SPECIFICATIONS AND DATA

27. TYPE OF FILLER(S)	28. SIZE	29. MATL	30. MIL-SPEC	31. MIC NO.

WELD HISTORY

◆32. WELDING STANDARD: S9074-AR-GIB-010A/278	33. WELDING PROCEDURE:	34. DATA SHEET	35. POSITION: [ ] VERT [ ] FLAT [ ] FIXED [ ] 45 DEG [ ] HORZ [ ] OVHD [ ] ROLLED
36. ACCESSIBILITY: [ ] 12"OR LESS [ ] UNRESTRICTED	37. PREHEAT TEMP	38. PREHEAT METHOD	39. POST HEAT. START TIME: TEMP REQD: STOP TIME:

40. PURGE GAS:	41. FLOW RATE	42. SHIELD GAS	43. FLOW RATE	44. CUP SIZE	45. TUNGSTEN SIZE

46. WELD LAYER	47. PROCESS	48. QUAL EXP DATE	49. AMPS	50. INTERPASS TEMP	51. WELDER SIGNATURE	52. DATE

53. INSPECTION DATA CONTAINED ON REVERSE OF THIS PAGE
REMARKS:

94. FINAL DISPOSITION: [ ] ACCEPT [ ] REJECT	95. NDT SUPERVISOR	DATE

THE PERSON DESIGNATED TO SIGN FOR AN ACTION VERIFIES, BASED ON PERSONAL OBSERVATION OR CERTIFIED RECORDS, AND CERTIFIES BY THEIR SIGNATURE THAT THE ACTION HAS BEEN PERFORMED IN ACCORDANCE WITH THE SPECIFIED REQUIREMENTS.

WELDING IN PROCESS CONTROL/NONDESTRUCTIVE TEST RECORD
QA FORM 20 (BACK)

NDT INSPECTION DATA

54. INSPECTION STANDARD	55. WELD CLASS	56. ACCEPTANCE STANDARD	57. ACCEPT CLASS

58. WELD PREP	59. INSP METHOD	60. ACCEPT/REJECT	61. NDT INSPECTOR SIGNATURE	62. DATE
COMPONENT A		[ ] ACCEPT [ ] REJECT		
COMPONENT B		[ ] ACCEPT [ ] REJECT		
63. JOINT FITUP		[ ] ACCEPT [ ] REJECT		

64. INSP LAYER	65. INSP METHOD	66. INSP PROC NO	67. ACCEPT/REJECT	68. NDT INSPECTOR SIGNATURE	69. DATE
			[ ] ACCEPT [ ] REJECT		
			[ ] ACCEPT [ ] REJECT		
			[ ] ACCEPT [ ] REJECT		
			[ ] ACCEPT [ ] REJECT		
			[ ] ACCEPT [ ] REJECT		

70. NDT INSPECTION DATA REPAIR NO._____ Defect: L W D

71. Repair Method: Excavation: L W D

72. INSP LAYER	73. INSP METHOD	74. INSP PROC NO.	75. ACCEPT/REJECT	76. NDT INSPECTOR SIGNATURE	77. DATE
			[ ] ACCEPT [ ] REJECT		
			[ ] ACCEPT [ ] REJECT		

78. NDT INSPECTION DATA REPAIR NO._____ Defect: L W D

79. Repair Method: Excavation: L W D

80. INSP LAYER	81. INSP METHOD	82. INSP PROC NO.	83. ACCEPT/REJECT	84. NDT INSPECTOR SIGNATURE	85. DATE
			[ ] ACCEPT [ ] REJECT		
			[ ] ACCEPT [ ] REJECT		

86. NDT INSPECTION DATA REPAIR NO._____ Defect: L W D

87. Repair Method: Excavation: L W D

88. INSP LAYER	89. INSP METHOD	90. INSP PROC NO.	91. ACCEPT/REJECT	92. NDT INSPECTOR SIGNATURE	93. DATE
			[ ] ACCEPT [ ] REJECT		
			[ ] ACCEPT [ ] REJECT		

53. REMARKS (Continued):

THE PERSON DESIGNATED TO SIGN FOR AN ACTION VERIFIES, BASED ON PERSONAL OBSERVATION OR CERTIFIED RECORDS, AND CERTIFIES BY THEIR SIGNATURE THAT THE ACTION HAS BEEN PERFORMED IN ACCORDANCE WITH THE SPECIFIED REQUIREMENTS.

WELDING IN PROCESS CONTROL/NONDESTRUCTIVE TEST RECORD
QA FORM 20 (FRONT)
When the form is used for production welding, the blocks marked with a ◆ must be completed by the planner.

◆1. PAGE 1 OF 2

◆2. SHIP USS BLUE RIDGE HULL NO. LCC19	◆3. JCN EM01-L261	◆4. CWP/REC SER. NO. N/A	◆5. LWC KTR	◆6. DATE 5 Apr 2025
◆7. SYSTEM Main Turbine Drain System	◆8. COMPONENT LP Turbine Steam Inlet Gage Piping	◆9. DWG NO. Mapping Plan Enclosure-02	◆10. CWP STEP NO. 5.7.2.3	
◆11. JOINT ID PJ-6D	◆12. JOINT DESIGN P-14	13. INST LOCATION: [ ] STBD COMPT: [ ] C/L FR: [ ] PORT	14. WELDED LOCATION: [ ] SHOP [ ] FIELD	

BASE MATERIAL DATA

15. COMP DATA	16. MATERIAL	17. SIZE	18. THICKNESS	19. MATL SPEC	20. MIC NO.
COMPONENT A:					
COMPONENT B:					
21. [ ] SEAL RING [ ] BACK RING/STRIP	22. MATERIAL	23. SIZE	24. THICKNESS	25. MATL SPEC	26. MIC NO.

WELDING MATERIAL SPECIFICATIONS AND DATA

27. TYPE OF FILLER(S)	28. SIZE	29. MATL	30. MIL-SPEC	31. MIC NO.

WELD HISTORY

◆32. WELDING STANDARD: S9074-AR-GIB-010A/278	33. WELDING PROCEDURE:	34. DATA SHEET	35. POSITION: [ ] VERT [ ] HORZ [ ] FLAT [ ] OVHD [ ] FIXED [ ] ROLLED [ ] 45 DEG	
36. ACCESSIBILITY: [ ] 12"OR LESS [ ] UNRESTRICTED	37. PREHEAT TEMP	38. PREHEAT METHOD	39. POST HEAT. TEMP REQD: START TIME: STOP TIME:	
40. PURGE GAS:	41. FLOW RATE	42. SHIELD GAS	43. FLOW RATE	44. CUP SIZE / 45. TUNGSTEN SIZE

46. WELD LAYER	47. PROCESS	48. QUAL EXP DATE	49. AMPS	50. INTERPASS TEMP	51. WELDER SIGNATURE	52. DATE

53. INSPECTION DATA CONTAINED ON REVERSE OF THIS PAGE
REMARKS:

94. FINAL DISPOSITION: [ ] ACCEPT [ ] REJECT	95. NDT SUPERVISOR	DATE

THE PERSON DESIGNATED TO SIGN FOR AN ACTION VERIFIES, BASED ON PERSONAL OBSERVATION OR CERTIFIED RECORDS, AND CERTIFIES BY THEIR SIGNATURE THAT THE ACTION HAS BEEN PERFORMED IN ACCORDANCE WITH THE SPECIFIED REQUIREMENTS.

WELDING IN PROCESS CONTROL/NONDESTRUCTIVE TEST RECORD
QA FORM 20 (BACK)

NDT INSPECTION DATA

54. INSPECTION STANDARD	55. WELD CLASS	56. ACCEPTANCE STANDARD	57. ACCEPT CLASS

58. WELD PREP	59. INSP METHOD	60. ACCEPT/REJECT	61. NDT INSPECTOR SIGNATURE	62. DATE
COMPONENT A		[ ] ACCEPT [ ] REJECT		
COMPONENT B		[ ] ACCEPT [ ] REJECT		
63. JOINT FITUP		[ ] ACCEPT [ ] REJECT		

64. INSP LAYER	65. INSP METHOD	66. INSP PROC NO	67. ACCEPT/REJECT	68. NDT INSPECTOR SIGNATURE	69. DATE
			[ ] ACCEPT [ ] REJECT		
			[ ] ACCEPT [ ] REJECT		
			[ ] ACCEPT [ ] REJECT		
			[ ] ACCEPT [ ] REJECT		
			[ ] ACCEPT [ ] REJECT		

70. NDT INSPECTION DATA REPAIR NO._____ Defect: L W D

71. Repair Method: Excavation: L W D

72. INSP LAYER	73. INSP METHOD	74. INSP PROC NO.	75. ACCEPT/REJECT	76. NDT INSPECTOR SIGNATURE	77. DATE
			[ ] ACCEPT [ ] REJECT		
			[ ] ACCEPT [ ] REJECT		

78. NDT INSPECTION DATA REPAIR NO._____ Defect: L W D

79. Repair Method: Excavation: L W D

80. INSP LAYER	81. INSP METHOD	82. INSP PROC NO.	83. ACCEPT/REJECT	84. NDT INSPECTOR SIGNATURE	85. DATE
			[ ] ACCEPT [ ] REJECT		
			[ ] ACCEPT [ ] REJECT		

86. NDT INSPECTION DATA REPAIR NO._____ Defect: L W D

87. Repair Method: Excavation: L W D

88. INSP LAYER	89. INSP METHOD	90. INSP PROC NO.	91. ACCEPT/REJECT	92. NDT INSPECTOR SIGNATURE	93. DATE
			[ ] ACCEPT [ ] REJECT		
			[ ] ACCEPT [ ] REJECT		

53. REMARKS (Continued):

THE PERSON DESIGNATED TO SIGN FOR AN ACTION VERIFIES, BASED ON PERSONAL OBSERVATION OR CERTIFIED RECORDS, AND CERTIFIES BY THEIR SIGNATURE THAT THE ACTION HAS BEEN PERFORMED IN ACCORDANCE WITH THE SPECIFIED REQUIREMENTS.

WELDING IN PROCESS CONTROL/NONDESTRUCTIVE TEST RECORD
QA FORM 20 (FRONT)
When the form is used for production welding, the blocks marked with a ◆ must be completed by the planner.

◆1. PAGE 1 OF 2

◆2. SHIP USS BLUE RIDGE HULL NO. LCC19	◆3. JCN EM01-L261	◆4. CWP/REC SER. NO. N/A	◆5. LWC KTR	◆6. DATE 5 Apr 2025
◆7. SYSTEM 600 PSI Aux Steam System	◆8. COMPONENT 600 PSI Aux Steam Gage Piping	◆9. DWG NO. Mapping Plan Enclosure-02	◆10. CWP STEP NO. 5.8.2.3	
◆11. JOINT ID PJ-1E	◆12. JOINT DESIGN P-14	13. INST LOCATION: [ ] STBD COMPT: [ ] C/L FR: [ ] PORT	14. WELDED LOCATION: [ ] SHOP [ ] FIELD	

BASE MATERIAL DATA

15. COMP DATA	16. MATERIAL	17. SIZE	18. THICKNESS	19. MATL SPEC	20. MIC NO.
COMPONENT A:					
COMPONENT B:					
21. [ ] SEAL RING [ ] BACK RING/STRIP	22. MATERIAL	23. SIZE	24. THICKNESS	25. MATL SPEC	26. MIC NO.

WELDING MATERIAL SPECIFICATIONS AND DATA

27. TYPE OF FILLER(S)	28. SIZE	29. MATL	30. MIL-SPEC	31. MIC NO.

WELD HISTORY

◆32. WELDING STANDARD: S9074-AR-GIB-010A/278	33. WELDING PROCEDURE:	34. DATA SHEET	35. POSITION: [ ] VERT [ ] HORZ [ ] FLAT [ ] OVHD [ ] FIXED [ ] ROLLED [ ] 45 DEG		
36. ACCESSIBILITY: [ ] 12"OR LESS [ ] UNRESTRICTED	37. PREHEAT TEMP	38. PREHEAT METHOD	39. POST HEAT. TEMP REQD: START TIME: STOP TIME:		
40. PURGE GAS:	41. FLOW RATE	42. SHIELD GAS	43. FLOW RATE	44. CUP SIZE	45. TUNGSTEN SIZE

46. WELD LAYER	47. PROCESS	48. QUAL EXP DATE	49. AMPS	50. INTERPASS TEMP	51. WELDER SIGNATURE	52. DATE

53. INSPECTION DATA CONTAINED ON REVERSE OF THIS PAGE
REMARKS:

94. FINAL DISPOSITION: [ ] ACCEPT [ ] REJECT	95. NDT SUPERVISOR	DATE

THE PERSON DESIGNATED TO SIGN FOR AN ACTION VERIFIES, BASED ON PERSONAL OBSERVATION OR CERTIFIED RECORDS, AND CERTIFIES BY THEIR SIGNATURE THAT THE ACTION HAS BEEN PERFORMED IN ACCORDANCE WITH THE SPECIFIED REQUIREMENTS.

WELDING IN PROCESS CONTROL/NONDESTRUCTIVE TEST RECORD
QA FORM 20 (BACK)

NDT INSPECTION DATA

54. INSPECTION STANDARD	55. WELD CLASS	56. ACCEPTANCE STANDARD	57. ACCEPT CLASS

58. WELD PREP	59. INSP METHOD	60. ACCEPT/REJECT	61. NDT INSPECTOR SIGNATURE	62. DATE
COMPONENT A		[ ] ACCEPT [ ] REJECT		
COMPONENT B		[ ] ACCEPT [ ] REJECT		
63. JOINT FITUP		[ ] ACCEPT [ ] REJECT		

64. INSP LAYER	65. INSP METHOD	66. INSP PROC NO	67. ACCEPT/REJECT	68. NDT INSPECTOR SIGNATURE	69. DATE
			[ ] ACCEPT [ ] REJECT		
			[ ] ACCEPT [ ] REJECT		
			[ ] ACCEPT [ ] REJECT		
			[ ] ACCEPT [ ] REJECT		
			[ ] ACCEPT [ ] REJECT		

70. NDT INSPECTION DATA REPAIR NO._____ Defect: L W D

71. Repair Method: Excavation: L W D

72. INSP LAYER	73. INSP METHOD	74. INSP PROC NO.	75. ACCEPT/REJECT	76. NDT INSPECTOR SIGNATURE	77. DATE
			[ ] ACCEPT [ ] REJECT		
			[ ] ACCEPT [ ] REJECT		

78. NDT INSPECTION DATA REPAIR NO._____ Defect: L W D

79. Repair Method: Excavation: L W D

80. INSP LAYER	81. INSP METHOD	82. INSP PROC NO.	83. ACCEPT/REJECT	84. NDT INSPECTOR SIGNATURE	85. DATE
			[ ] ACCEPT [ ] REJECT		
			[ ] ACCEPT [ ] REJECT		

86. NDT INSPECTION DATA REPAIR NO._____ Defect: L W D

87. Repair Method: Excavation: L W D

88. INSP LAYER	89. INSP METHOD	90. INSP PROC NO.	91. ACCEPT/REJECT	92. NDT INSPECTOR SIGNATURE	93. DATE
			[ ] ACCEPT [ ] REJECT		
			[ ] ACCEPT [ ] REJECT		

53. REMARKS (Continued):

THE PERSON DESIGNATED TO SIGN FOR AN ACTION VERIFIES, BASED ON PERSONAL OBSERVATION OR CERTIFIED RECORDS, AND CERTIFIES BY THEIR SIGNATURE THAT THE ACTION HAS BEEN PERFORMED IN ACCORDANCE WITH THE SPECIFIED REQUIREMENTS.

WELDING IN PROCESS CONTROL/NONDESTRUCTIVE TEST RECORD
QA FORM 20 (FRONT)
When the form is used for production welding, the blocks marked with a ◆ must be completed by the planner.

◆1. PAGE 1 OF 2

◆2. SHIP USS BLUE RIDGE HULL NO. LCC19	◆3. JCN EM01-L261	◆4. CWP/REC SER. NO. N/A	◆5. LWC KTR	◆6. DATE 5 Apr 2025
◆7. SYSTEM 600 PSI Aux Steam System	◆8. COMPONENT 600 PSI Aux Steam Gage Piping	◆9. DWG NO. Mapping Plan Enclosure-02	◆10. CWP STEP NO. 5.8.2.3	
◆11. JOINT ID PJ-2E	◆12. JOINT DESIGN P-14	13. INST LOCATION: [ ] STBD COMPT: [ ] C/L FR: [ ] PORT	14. WELDED LOCATION: [ ] SHOP [ ] FIELD	

BASE MATERIAL DATA

15. COMP DATA	16. MATERIAL	17. SIZE	18. THICKNESS	19. MATL SPEC	20. MIC NO.
COMPONENT A:					
COMPONENT B:					
21. [ ] SEAL RING [ ] BACK RING/STRIP	22. MATERIAL	23. SIZE	24. THICKNESS	25. MATL SPEC	26. MIC NO.

WELDING MATERIAL SPECIFICATIONS AND DATA

27. TYPE OF FILLER(S)	28. SIZE	29. MATL	30. MIL-SPEC	31. MIC NO.

WELD HISTORY

◆32. WELDING STANDARD: S9074-AR-GIB-010A/278	33. WELDING PROCEDURE:	34. DATA SHEET	35. POSITION: [ ] VERT [ ] HORZ [ ] FLAT [ ] OVHD [ ] FIXED [ ] ROLLED [ ] 45 DEG	
36. ACCESSIBILITY: [ ] 12"OR LESS [ ] UNRESTRICTED	37. PREHEAT TEMP	38. PREHEAT METHOD	39. POST HEAT. TEMP REQD: START TIME: STOP TIME:	
40. PURGE GAS:	41. FLOW RATE	42. SHIELD GAS	43. FLOW RATE	44. CUP SIZE / 45. TUNGSTEN SIZE

46. WELD LAYER	47. PROCESS	48. QUAL EXP DATE	49. AMPS	50. INTERPASS TEMP	51. WELDER SIGNATURE	52. DATE

53. INSPECTION DATA CONTAINED ON REVERSE OF THIS PAGE
REMARKS:

94. FINAL DISPOSITION: [ ] ACCEPT [ ] REJECT	95. NDT SUPERVISOR DATE

THE PERSON DESIGNATED TO SIGN FOR AN ACTION VERIFIES, BASED ON PERSONAL OBSERVATION OR CERTIFIED RECORDS, AND CERTIFIES BY THEIR SIGNATURE THAT THE ACTION HAS BEEN PERFORMED IN ACCORDANCE WITH THE SPECIFIED REQUIREMENTS.

WELDING IN PROCESS CONTROL/NONDESTRUCTIVE TEST RECORD
QA FORM 20 (BACK)

NDT INSPECTION DATA

54. INSPECTION STANDARD	55. WELD CLASS	56. ACCEPTANCE STANDARD	57. ACCEPT CLASS

58. WELD PREP	59. INSP METHOD	60. ACCEPT/REJECT	61. NDT INSPECTOR SIGNATURE	62. DATE
COMPONENT A		[ ] ACCEPT [ ] REJECT		
COMPONENT B		[ ] ACCEPT [ ] REJECT		
63. JOINT FITUP		[ ] ACCEPT [ ] REJECT		

64. INSP LAYER	65. INSP METHOD	66. INSP PROC NO	67. ACCEPT/REJECT	68. NDT INSPECTOR SIGNATURE	69. DATE
			[ ] ACCEPT [ ] REJECT		
			[ ] ACCEPT [ ] REJECT		
			[ ] ACCEPT [ ] REJECT		
			[ ] ACCEPT [ ] REJECT		
			[ ] ACCEPT [ ] REJECT		

70. NDT INSPECTION DATA REPAIR NO._____ Defect: L W D

71. Repair Method: Excavation: L W D

72. INSP LAYER	73. INSP METHOD	74. INSP PROC NO.	75. ACCEPT/REJECT	76. NDT INSPECTOR SIGNATURE	77. DATE
			[ ] ACCEPT [ ] REJECT		
			[ ] ACCEPT [ ] REJECT		

78. NDT INSPECTION DATA REPAIR NO._____ Defect: L W D

79. Repair Method: Excavation: L W D

80. INSP LAYER	81. INSP METHOD	82. INSP PROC NO.	83. ACCEPT/REJECT	84. NDT INSPECTOR SIGNATURE	85. DATE
			[ ] ACCEPT [ ] REJECT		
			[ ] ACCEPT [ ] REJECT		

86. NDT INSPECTION DATA REPAIR NO._____ Defect: L W D

87. Repair Method: Excavation: L W D

88. INSP LAYER	89. INSP METHOD	90. INSP PROC NO.	91. ACCEPT/REJECT	92. NDT INSPECTOR SIGNATURE	93. DATE
			[ ] ACCEPT [ ] REJECT		
			[ ] ACCEPT [ ] REJECT		

53. REMARKS (Continued):

THE PERSON DESIGNATED TO SIGN FOR AN ACTION VERIFIES, BASED ON PERSONAL OBSERVATION OR CERTIFIED RECORDS, AND CERTIFIES BY THEIR SIGNATURE THAT THE ACTION HAS BEEN PERFORMED IN ACCORDANCE WITH THE SPECIFIED REQUIREMENTS.

WELDING IN PROCESS CONTROL/NONDESTRUCTIVE TEST RECORD
QA FORM 20 (FRONT)
When the form is used for production welding, the blocks marked with a ◆ must be completed by the planner.

◆1. PAGE 1 OF 2

◆2. SHIP USS BLUE RIDGE HULL NO. LCC19	◆3. JCN EM01-L261	◆4. CWP/REC SER. NO. N/A	◆5. LWC KTR	◆6. DATE 5 Apr 2025
◆7. SYSTEM 600 PSI Aux Steam System	◆8. COMPONENT 600 PSI Aux Steam Gage Piping	◆9. DWG NO. Mapping Plan Enclosure-02	◆10. CWP STEP NO. 5.8.2.3	
◆11. JOINT ID PJ-3E	◆12. JOINT DESIGN P-17	13. INST LOCATION: [ ] STBD COMPT: [ ] C/L FR: [ ] PORT	14. WELDED LOCATION: [ ] SHOP [ ] FIELD	

BASE MATERIAL DATA

15. COMP DATA	16. MATERIAL	17. SIZE	18. THICKNESS	19. MATL SPEC	20. MIC NO.
COMPONENT A:					
COMPONENT B:					
21. [ ] SEAL RING [ ] BACK RING/STRIP	22. MATERIAL	23. SIZE	24. THICKNESS	25. MATL SPEC	26. MIC NO.

WELDING MATERIAL SPECIFICATIONS AND DATA

27. TYPE OF FILLER(S)	28. SIZE	29. MATL	30. MIL-SPEC	31. MIC NO.

WELD HISTORY

◆32. WELDING STANDARD: S9074-AR-GIB-010A/278	33. WELDING PROCEDURE:	34. DATA SHEET	35. POSITION: [ ] VERT [ ] FLAT [ ] FIXED [ ] 45 DEG [ ] HORZ [ ] OVHD [ ] ROLLED	
36. ACCESSIBILITY: [ ] 12"OR LESS [ ] UNRESTRICTED	37. PREHEAT TEMP	38. PREHEAT METHOD	39. POST HEAT. TEMP REQD: START TIME: STOP TIME:	
40. PURGE GAS:	41. FLOW RATE	42. SHIELD GAS	43. FLOW RATE	44. CUP SIZE / 45. TUNGSTEN SIZE

46. WELD LAYER	47. PROCESS	48. QUAL EXP DATE	49. AMPS	50. INTERPASS TEMP	51. WELDER SIGNATURE	52. DATE

53. INSPECTION DATA CONTAINED ON REVERSE OF THIS PAGE
REMARKS:

94. FINAL DISPOSITION: [ ] ACCEPT [ ] REJECT	95. NDT SUPERVISOR DATE

THE PERSON DESIGNATED TO SIGN FOR AN ACTION VERIFIES, BASED ON PERSONAL OBSERVATION OR CERTIFIED RECORDS, AND CERTIFIES BY THEIR SIGNATURE THAT THE ACTION HAS BEEN PERFORMED IN ACCORDANCE WITH THE SPECIFIED REQUIREMENTS.

WELDING IN PROCESS CONTROL/NONDESTRUCTIVE TEST RECORD
QA FORM 20 (BACK)

NDT INSPECTION DATA

54. INSPECTION STANDARD	55. WELD CLASS	56. ACCEPTANCE STANDARD	57. ACCEPT CLASS

58. WELD PREP	59. INSP METHOD	60. ACCEPT/REJECT	61. NDT INSPECTOR SIGNATURE	62. DATE
COMPONENT A		[ ] ACCEPT [ ] REJECT		
COMPONENT B		[ ] ACCEPT [ ] REJECT		
63. JOINT FITUP		[ ] ACCEPT [ ] REJECT		

64. INSP LAYER	65. INSP METHOD	66. INSP PROC NO	67. ACCEPT/REJECT	68. NDT INSPECTOR SIGNATURE	69. DATE
			[ ] ACCEPT [ ] REJECT		
			[ ] ACCEPT [ ] REJECT		
			[ ] ACCEPT [ ] REJECT		
			[ ] ACCEPT [ ] REJECT		
			[ ] ACCEPT [ ] REJECT		

70. NDT INSPECTION DATA REPAIR NO._____ Defect: L W D

71. Repair Method: Excavation: L W D

72. INSP LAYER	73. INSP METHOD	74. INSP PROC NO.	75. ACCEPT/REJECT	76. NDT INSPECTOR SIGNATURE	77. DATE
			[ ] ACCEPT [ ] REJECT		
			[ ] ACCEPT [ ] REJECT		

78. NDT INSPECTION DATA REPAIR NO._____ Defect: L W D

79. Repair Method: Excavation: L W D

80. INSP LAYER	81. INSP METHOD	82. INSP PROC NO.	83. ACCEPT/REJECT	84. NDT INSPECTOR SIGNATURE	85. DATE
			[ ] ACCEPT [ ] REJECT		
			[ ] ACCEPT [ ] REJECT		

86. NDT INSPECTION DATA REPAIR NO._____ Defect: L W D

87. Repair Method: Excavation: L W D

88. INSP LAYER	89. INSP METHOD	90. INSP PROC NO.	91. ACCEPT/REJECT	92. NDT INSPECTOR SIGNATURE	93. DATE
			[ ] ACCEPT [ ] REJECT		
			[ ] ACCEPT [ ] REJECT		

53. REMARKS (Continued):

THE PERSON DESIGNATED TO SIGN FOR AN ACTION VERIFIES, BASED ON PERSONAL OBSERVATION OR CERTIFIED RECORDS, AND CERTIFIES BY THEIR SIGNATURE THAT THE ACTION HAS BEEN PERFORMED IN ACCORDANCE WITH THE SPECIFIED REQUIREMENTS.

WELDING IN PROCESS CONTROL/NONDESTRUCTIVE TEST RECORD
QA FORM 20 (FRONT)
When the form is used for production welding, the blocks marked with a ◆ must be completed by the planner.

◆1. PAGE 1 OF 2

◆2. SHIP USS BLUE RIDGE HULL NO. LCC19	◆3. JCN EM01-L261	◆4. CWP/REC SER. NO. N/A	◆5. LWC KTR	◆6. DATE 5 Apr 2025
◆7. SYSTEM 600 PSI Aux Steam System	◆8. COMPONENT 600 PSI Aux Steam Gage Piping	◆9. DWG NO. Mapping Plan Enclosure-02	◆10. CWP STEP NO. 5.8.2.3	
◆11. JOINT ID PJ-4E	◆12. JOINT DESIGN P-17	13. INST LOCATION: [ ] STBD COMPT: [ ] C/L FR: [ ] PORT	14. WELDED LOCATION: [ ] SHOP [ ] FIELD	

BASE MATERIAL DATA

15. COMP DATA	16. MATERIAL	17. SIZE	18. THICKNESS	19. MATL SPEC	20. MIC NO.
COMPONENT A:					
COMPONENT B:					
21. [ ] SEAL RING [ ] BACK RING/STRIP	22. MATERIAL	23. SIZE	24. THICKNESS	25. MATL SPEC	26. MIC NO.

WELDING MATERIAL SPECIFICATIONS AND DATA

27. TYPE OF FILLER(S)	28. SIZE	29. MATL	30. MIL-SPEC	31. MIC NO.

WELD HISTORY

◆32. WELDING STANDARD: S9074-AR-GIB-010A/278	33. WELDING PROCEDURE:	34. DATA SHEET	35. POSITION: [ ] VERT [ ] HORZ [ ] FLAT [ ] OVHD [ ] FIXED [ ] ROLLED [ ] 45 DEG		
36. ACCESSIBILITY: [ ] 12"OR LESS [ ] UNRESTRICTED	37. PREHEAT TEMP	38. PREHEAT METHOD	39. POST HEAT. TEMP REQD: START TIME: STOP TIME:		
40. PURGE GAS:	41. FLOW RATE	42. SHIELD GAS	43. FLOW RATE	44. CUP SIZE	45. TUNGSTEN SIZE

46. WELD LAYER	47. PROCESS	48. QUAL EXP DATE	49. AMPS	50. INTERPASS TEMP	51. WELDER SIGNATURE	52. DATE

53. INSPECTION DATA CONTAINED ON REVERSE OF THIS PAGE
REMARKS:

94. FINAL DISPOSITION: [ ] ACCEPT [ ] REJECT	95. NDT SUPERVISOR	DATE

THE PERSON DESIGNATED TO SIGN FOR AN ACTION VERIFIES, BASED ON PERSONAL OBSERVATION OR CERTIFIED RECORDS, AND CERTIFIES BY THEIR SIGNATURE THAT THE ACTION HAS BEEN PERFORMED IN ACCORDANCE WITH THE SPECIFIED REQUIREMENTS.

WELDING IN PROCESS CONTROL/NONDESTRUCTIVE TEST RECORD
QA FORM 20 (BACK)

NDT INSPECTION DATA

54. INSPECTION STANDARD	55. WELD CLASS	56. ACCEPTANCE STANDARD	57. ACCEPT CLASS

58. WELD PREP	59. INSP METHOD	60. ACCEPT/REJECT	61. NDT INSPECTOR SIGNATURE	62. DATE
COMPONENT A		[ ] ACCEPT [ ] REJECT		
COMPONENT B		[ ] ACCEPT [ ] REJECT		
63. JOINT FITUP		[ ] ACCEPT [ ] REJECT		

64. INSP LAYER	65. INSP METHOD	66. INSP PROC NO	67. ACCEPT/REJECT	68. NDT INSPECTOR SIGNATURE	69. DATE
			[ ] ACCEPT [ ] REJECT		
			[ ] ACCEPT [ ] REJECT		
			[ ] ACCEPT [ ] REJECT		
			[ ] ACCEPT [ ] REJECT		
			[ ] ACCEPT [ ] REJECT		

70. NDT INSPECTION DATA REPAIR NO._____ Defect: L W D

71. Repair Method: Excavation: L W D

72. INSP LAYER	73. INSP METHOD	74. INSP PROC NO.	75. ACCEPT/REJECT	76. NDT INSPECTOR SIGNATURE	77. DATE
			[ ] ACCEPT [ ] REJECT		
			[ ] ACCEPT [ ] REJECT		

78. NDT INSPECTION DATA REPAIR NO._____ Defect: L W D

79. Repair Method: Excavation: L W D

80. INSP LAYER	81. INSP METHOD	82. INSP PROC NO.	83. ACCEPT/REJECT	84. NDT INSPECTOR SIGNATURE	85. DATE
			[ ] ACCEPT [ ] REJECT		
			[ ] ACCEPT [ ] REJECT		

86. NDT INSPECTION DATA REPAIR NO._____ Defect: L W D

87. Repair Method: Excavation: L W D

88. INSP LAYER	89. INSP METHOD	90. INSP PROC NO.	91. ACCEPT/REJECT	92. NDT INSPECTOR SIGNATURE	93. DATE
			[ ] ACCEPT [ ] REJECT		
			[ ] ACCEPT [ ] REJECT		

53. REMARKS (Continued):

THE PERSON DESIGNATED TO SIGN FOR AN ACTION VERIFIES, BASED ON PERSONAL OBSERVATION OR CERTIFIED RECORDS, AND CERTIFIES BY THEIR SIGNATURE THAT THE ACTION HAS BEEN PERFORMED IN ACCORDANCE WITH THE SPECIFIED REQUIREMENTS.

WELDING IN PROCESS CONTROL/NONDESTRUCTIVE TEST RECORD
QA FORM 20 (FRONT)
When the form is used for production welding, the blocks marked with a ◆ must be completed by the planner.

◆1. PAGE 1 OF 2

◆2. SHIP USS BLUE RIDGE HULL NO. LCC19	◆3. JCN EM01-L261	◆4. CWP/REC SER. NO. N/A	◆5. LWC KTR	◆6. DATE 5 Apr 2025
◆7. SYSTEM 600 PSI Aux Steam System	◆8. COMPONENT 600 PSI Aux Steam Gage Piping	◆9. DWG NO. Mapping Plan Enclosure-02	◆10. CWP STEP NO. 5.8.2.3	
◆11. JOINT ID PJ-5E	◆12. JOINT DESIGN P-14	13. INST LOCATION: [ ] STBD COMPT: [ ] C/L FR: [ ] PORT	14. WELDED LOCATION: [ ] SHOP [ ] FIELD	

BASE MATERIAL DATA

15. COMP DATA	16. MATERIAL	17. SIZE	18. THICKNESS	19. MATL SPEC	20. MIC NO.
COMPONENT A:					
COMPONENT B:					
21. [ ] SEAL RING [ ] BACK RING/STRIP	22. MATERIAL	23. SIZE	24. THICKNESS	25. MATL SPEC	26. MIC NO.

WELDING MATERIAL SPECIFICATIONS AND DATA

27. TYPE OF FILLER(S)	28. SIZE	29. MATL	30. MIL-SPEC	31. MIC NO.

WELD HISTORY

◆32. WELDING STANDARD: S9074-AR-GIB-010A/278	33. WELDING PROCEDURE:	34. DATA SHEET	35. POSITION: [ ] VERT [ ] HORZ [ ] FLAT [ ] OVHD [ ] FIXED [ ] ROLLED [ ] 45 DEG	
36. ACCESSIBILITY: [ ] 12"OR LESS [ ] UNRESTRICTED	37. PREHEAT TEMP	38. PREHEAT METHOD	39. POST HEAT. TEMP REQD: START TIME: STOP TIME:	
40. PURGE GAS:	41. FLOW RATE	42. SHIELD GAS	43. FLOW RATE	44. CUP SIZE / 45. TUNGSTEN SIZE

46. WELD LAYER	47. PROCESS	48. QUAL EXP DATE	49. AMPS	50. INTERPASS TEMP	51. WELDER SIGNATURE	52. DATE

53. INSPECTION DATA CONTAINED ON REVERSE OF THIS PAGE
REMARKS:

94. FINAL DISPOSITION: [ ] ACCEPT [ ] REJECT	95. NDT SUPERVISOR DATE

THE PERSON DESIGNATED TO SIGN FOR AN ACTION VERIFIES, BASED ON PERSONAL OBSERVATION OR CERTIFIED RECORDS, AND CERTIFIES BY THEIR SIGNATURE THAT THE ACTION HAS BEEN PERFORMED IN ACCORDANCE WITH THE SPECIFIED REQUIREMENTS.

WELDING IN PROCESS CONTROL/NONDESTRUCTIVE TEST RECORD
QA FORM 20 (BACK)

NDT INSPECTION DATA

54. INSPECTION STANDARD	55. WELD CLASS	56. ACCEPTANCE STANDARD	57. ACCEPT CLASS

58. WELD PREP	59. INSP METHOD	60. ACCEPT/REJECT	61. NDT INSPECTOR SIGNATURE	62. DATE
COMPONENT A		[ ] ACCEPT [ ] REJECT		
COMPONENT B		[ ] ACCEPT [ ] REJECT		
63. JOINT FITUP		[ ] ACCEPT [ ] REJECT		

64. INSP LAYER	65. INSP METHOD	66. INSP PROC NO	67. ACCEPT/REJECT	68. NDT INSPECTOR SIGNATURE	69. DATE
			[ ] ACCEPT [ ] REJECT		
			[ ] ACCEPT [ ] REJECT		
			[ ] ACCEPT [ ] REJECT		
			[ ] ACCEPT [ ] REJECT		
			[ ] ACCEPT [ ] REJECT		

70. NDT INSPECTION DATA REPAIR NO._____ Defect: L W D

71. Repair Method: Excavation: L W D

72. INSP LAYER	73. INSP METHOD	74. INSP PROC NO.	75. ACCEPT/REJECT	76. NDT INSPECTOR SIGNATURE	77. DATE
			[ ] ACCEPT [ ] REJECT		
			[ ] ACCEPT [ ] REJECT		

78. NDT INSPECTION DATA REPAIR NO._____ Defect: L W D

79. Repair Method: Excavation: L W D

80. INSP LAYER	81. INSP METHOD	82. INSP PROC NO.	83. ACCEPT/REJECT	84. NDT INSPECTOR SIGNATURE	85. DATE
			[ ] ACCEPT [ ] REJECT		
			[ ] ACCEPT [ ] REJECT		

86. NDT INSPECTION DATA REPAIR NO._____ Defect: L W D

87. Repair Method: Excavation: L W D

88. INSP LAYER	89. INSP METHOD	90. INSP PROC NO.	91. ACCEPT/REJECT	92. NDT INSPECTOR SIGNATURE	93. DATE
			[ ] ACCEPT [ ] REJECT		
			[ ] ACCEPT [ ] REJECT		

53. REMARKS (Continued):

THE PERSON DESIGNATED TO SIGN FOR AN ACTION VERIFIES, BASED ON PERSONAL OBSERVATION OR CERTIFIED RECORDS, AND CERTIFIES BY THEIR SIGNATURE THAT THE ACTION HAS BEEN PERFORMED IN ACCORDANCE WITH THE SPECIFIED REQUIREMENTS.

WELDING IN PROCESS CONTROL/NONDESTRUCTIVE TEST RECORD
QA FORM 20 (FRONT)
When the form is used for production welding, the blocks marked with a ◆ must be completed by the planner.

◆1. PAGE 1 OF 2

◆2. SHIP USS BLUE RIDGE HULL NO. LCC19	◆3. JCN EM01-L261	◆4. CWP/REC SER. NO. N/A	◆5. LWC KTR	◆6. DATE 5 Apr 2025
◆7. SYSTEM 600 PSI Aux Steam System	◆8. COMPONENT 600 PSI Aux Steam Gage Piping	◆9. DWG NO. Mapping Plan Enclosure-02	◆10. CWP STEP NO. 5.8.2.3	
◆11. JOINT ID PJ-6E	◆12. JOINT DESIGN P-14	13. INST LOCATION: [ ] STBD COMPT: [ ] C/L FR: [ ] PORT	14. WELDED LOCATION: [ ] SHOP [ ] FIELD	

BASE MATERIAL DATA

15. COMP DATA	16. MATERIAL	17. SIZE	18. THICKNESS	19. MATL SPEC	20. MIC NO.
COMPONENT A:					
COMPONENT B:					
21. [ ] SEAL RING [ ] BACK RING/STRIP	22. MATERIAL	23. SIZE	24. THICKNESS	25. MATL SPEC	26. MIC NO.

WELDING MATERIAL SPECIFICATIONS AND DATA

27. TYPE OF FILLER(S)	28. SIZE	29. MATL	30. MIL-SPEC	31. MIC NO.

WELD HISTORY

◆32. WELDING STANDARD: S9074-AR-GIB-010A/278	33. WELDING PROCEDURE:	34. DATA SHEET	35. POSITION: [ ] VERT [ ] HORZ [ ] FLAT [ ] OVHD [ ] FIXED [ ] ROLLED [ ] 45 DEG		
36. ACCESSIBILITY: [ ] 12"OR LESS [ ] UNRESTRICTED	37. PREHEAT TEMP	38. PREHEAT METHOD	39. POST HEAT. TEMP REQD: START TIME: STOP TIME:		
40. PURGE GAS:	41. FLOW RATE	42. SHIELD GAS	43. FLOW RATE	44. CUP SIZE	45. TUNGSTEN SIZE

46. WELD LAYER	47. PROCESS	48. QUAL EXP DATE	49. AMPS	50. INTERPASS TEMP	51. WELDER SIGNATURE	52. DATE

53. INSPECTION DATA CONTAINED ON REVERSE OF THIS PAGE
REMARKS:

94. FINAL DISPOSITION: [ ] ACCEPT [ ] REJECT	95. NDT SUPERVISOR	DATE

THE PERSON DESIGNATED TO SIGN FOR AN ACTION VERIFIES, BASED ON PERSONAL OBSERVATION OR CERTIFIED RECORDS, AND CERTIFIES BY THEIR SIGNATURE THAT THE ACTION HAS BEEN PERFORMED IN ACCORDANCE WITH THE SPECIFIED REQUIREMENTS.

WELDING IN PROCESS CONTROL/NONDESTRUCTIVE TEST RECORD
QA FORM 20 (BACK)

NDT INSPECTION DATA

54. INSPECTION STANDARD	55. WELD CLASS	56. ACCEPTANCE STANDARD	57. ACCEPT CLASS

58. WELD PREP	59. INSP METHOD	60. ACCEPT/REJECT	61. NDT INSPECTOR SIGNATURE	62. DATE
COMPONENT A		[ ] ACCEPT [ ] REJECT		
COMPONENT B		[ ] ACCEPT [ ] REJECT		
63. JOINT FITUP		[ ] ACCEPT [ ] REJECT		

64. INSP LAYER	65. INSP METHOD	66. INSP PROC NO	67. ACCEPT/REJECT	68. NDT INSPECTOR SIGNATURE	69. DATE
			[ ] ACCEPT [ ] REJECT		
			[ ] ACCEPT [ ] REJECT		
			[ ] ACCEPT [ ] REJECT		
			[ ] ACCEPT [ ] REJECT		
			[ ] ACCEPT [ ] REJECT		

70. NDT INSPECTION DATA REPAIR NO._____ Defect: L W D

71. Repair Method: Excavation: L W D

72. INSP LAYER	73. INSP METHOD	74. INSP PROC NO.	75. ACCEPT/REJECT	76. NDT INSPECTOR SIGNATURE	77. DATE
			[ ] ACCEPT [ ] REJECT		
			[ ] ACCEPT [ ] REJECT		

78. NDT INSPECTION DATA REPAIR NO._____ Defect: L W D

79. Repair Method: Excavation: L W D

80. INSP LAYER	81. INSP METHOD	82. INSP PROC NO.	83. ACCEPT/REJECT	84. NDT INSPECTOR SIGNATURE	85. DATE
			[ ] ACCEPT [ ] REJECT		
			[ ] ACCEPT [ ] REJECT		

86. NDT INSPECTION DATA REPAIR NO._____ Defect: L W D

87. Repair Method: Excavation: L W D

88. INSP LAYER	89. INSP METHOD	90. INSP PROC NO.	91. ACCEPT/REJECT	92. NDT INSPECTOR SIGNATURE	93. DATE
			[ ] ACCEPT [ ] REJECT		
			[ ] ACCEPT [ ] REJECT		

53. REMARKS (Continued):

THE PERSON DESIGNATED TO SIGN FOR AN ACTION VERIFIES, BASED ON PERSONAL OBSERVATION OR CERTIFIED RECORDS, AND CERTIFIES BY THEIR SIGNATURE THAT THE ACTION HAS BEEN PERFORMED IN ACCORDANCE WITH THE SPECIFIED REQUIREMENTS.

WELDING IN PROCESS CONTROL/NONDESTRUCTIVE TEST RECORD
QA FORM 20 (FRONT)
When the form is used for production welding, the blocks marked with a ◆ must be completed by the planner.

◆1. PAGE 1 OF 2

◆2. SHIP USS BLUE RIDGE HULL NO. LCC19	◆3. JCN EM01-L261	◆4. CWP/REC SER. NO. N/A	◆5. LWC KTR	◆6. DATE 5 Apr 2025
◆7. SYSTEM 600 PSI Aux Steam System	◆8. COMPONENT MN COND CIRC PMP Steam Inlet Gage Piping	◆9. DWG NO. Mapping Plan Enclosure-02	◆10. CWP STEP NO. 5.8.2.3	
◆11. JOINT ID PJ-1F	◆12. JOINT DESIGN P-14	13. INST LOCATION: [ ] STBD COMPT: [ ] C/L FR: [ ] PORT	14. WELDED LOCATION: [ ] SHOP [ ] FIELD	

BASE MATERIAL DATA

15. COMP DATA	16. MATERIAL	17. SIZE	18. THICKNESS	19. MATL SPEC	20. MIC NO.
COMPONENT A:					
COMPONENT B:					
21. [ ] SEAL RING [ ] BACK RING/STRIP	22. MATERIAL	23. SIZE	24. THICKNESS	25. MATL SPEC	26. MIC NO.

WELDING MATERIAL SPECIFICATIONS AND DATA

27. TYPE OF FILLER(S)	28. SIZE	29. MATL	30. MIL-SPEC	31. MIC NO.

WELD HISTORY

◆32. WELDING STANDARD: S9074-AR-GIB-010A/278	33. WELDING PROCEDURE:	34. DATA SHEET	35. POSITION: [ ] VERT [ ] HORZ [ ] FLAT [ ] OVHD [ ] FIXED [ ] ROLLED [ ] 45 DEG	
36. ACCESSIBILITY: [ ] 12"OR LESS [ ] UNRESTRICTED	37. PREHEAT TEMP	38. PREHEAT METHOD	39. POST HEAT. TEMP REQD: START TIME: STOP TIME:	
40. PURGE GAS:	41. FLOW RATE	42. SHIELD GAS	43. FLOW RATE	44. CUP SIZE / 45. TUNGSTEN SIZE

46. WELD LAYER	47. PROCESS	48. QUAL EXP DATE	49. AMPS	50. INTERPASS TEMP	51. WELDER SIGNATURE	52. DATE

53. INSPECTION DATA CONTAINED ON REVERSE OF THIS PAGE
REMARKS:

94. FINAL DISPOSITION: [ ] ACCEPT [ ] REJECT	95. NDT SUPERVISOR	DATE

THE PERSON DESIGNATED TO SIGN FOR AN ACTION VERIFIES, BASED ON PERSONAL OBSERVATION OR CERTIFIED RECORDS, AND CERTIFIES BY THEIR SIGNATURE THAT THE ACTION HAS BEEN PERFORMED IN ACCORDANCE WITH THE SPECIFIED REQUIREMENTS.

WELDING IN PROCESS CONTROL/NONDESTRUCTIVE TEST RECORD
QA FORM 20 (BACK)

NDT INSPECTION DATA

54. INSPECTION STANDARD	55. WELD CLASS	56. ACCEPTANCE STANDARD	57. ACCEPT CLASS

58. WELD PREP	59. INSP METHOD	60. ACCEPT/REJECT	61. NDT INSPECTOR SIGNATURE	62. DATE
COMPONENT A		[ ] ACCEPT [ ] REJECT		
COMPONENT B		[ ] ACCEPT [ ] REJECT		
63. JOINT FITUP		[ ] ACCEPT [ ] REJECT		

64. INSP LAYER	65. INSP METHOD	66. INSP PROC NO	67. ACCEPT/REJECT	68. NDT INSPECTOR SIGNATURE	69. DATE
			[ ] ACCEPT [ ] REJECT		
			[ ] ACCEPT [ ] REJECT		
			[ ] ACCEPT [ ] REJECT		
			[ ] ACCEPT [ ] REJECT		
			[ ] ACCEPT [ ] REJECT		

70. NDT INSPECTION DATA REPAIR NO._____ Defect: L W D

71. Repair Method: Excavation: L W D

72. INSP LAYER	73. INSP METHOD	74. INSP PROC NO.	75. ACCEPT/REJECT	76. NDT INSPECTOR SIGNATURE	77. DATE
			[ ] ACCEPT [ ] REJECT		
			[ ] ACCEPT [ ] REJECT		

78. NDT INSPECTION DATA REPAIR NO._____ Defect: L W D

79. Repair Method: Excavation: L W D

80. INSP LAYER	81. INSP METHOD	82. INSP PROC NO.	83. ACCEPT/REJECT	84. NDT INSPECTOR SIGNATURE	85. DATE
			[ ] ACCEPT [ ] REJECT		
			[ ] ACCEPT [ ] REJECT		

86. NDT INSPECTION DATA REPAIR NO._____ Defect: L W D

87. Repair Method: Excavation: L W D

88. INSP LAYER	89. INSP METHOD	90. INSP PROC NO.	91. ACCEPT/REJECT	92. NDT INSPECTOR SIGNATURE	93. DATE
			[ ] ACCEPT [ ] REJECT		
			[ ] ACCEPT [ ] REJECT		

53. REMARKS (Continued):

THE PERSON DESIGNATED TO SIGN FOR AN ACTION VERIFIES, BASED ON PERSONAL OBSERVATION OR CERTIFIED RECORDS, AND CERTIFIES BY THEIR SIGNATURE THAT THE ACTION HAS BEEN PERFORMED IN ACCORDANCE WITH THE SPECIFIED REQUIREMENTS.

WELDING IN PROCESS CONTROL/NONDESTRUCTIVE TEST RECORD
QA FORM 20 (FRONT)
When the form is used for production welding, the blocks marked with a ◆ must be completed by the planner.

◆1. PAGE 1 OF 2

◆2. SHIP USS BLUE RIDGE HULL NO. LCC19	◆3. JCN EM01-L261	◆4. CWP/REC SER. NO. N/A	◆5. LWC KTR	◆6. DATE 5 Apr 2025
◆7. SYSTEM 600 PSI Aux Steam System	◆8. COMPONENT MN COND CIRC PMP Steam Inlet Gage Piping	◆9. DWG NO. Mapping Plan Enclosure-02	◆10. CWP STEP NO. 5.8.2.3	
◆11. JOINT ID PJ-2F	◆12. JOINT DESIGN P-14	13. INST LOCATION: [ ] STBD COMPT: [ ] C/L FR: [ ] PORT	14. WELDED LOCATION: [ ] SHOP [ ] FIELD	

BASE MATERIAL DATA

15. COMP DATA	16. MATERIAL	17. SIZE	18. THICKNESS	19. MATL SPEC	20. MIC NO.
COMPONENT A:					
COMPONENT B:					
21. [ ] SEAL RING [ ] BACK RING/STRIP	22. MATERIAL	23. SIZE	24. THICKNESS	25. MATL SPEC	26. MIC NO.

WELDING MATERIAL SPECIFICATIONS AND DATA

27. TYPE OF FILLER(S)	28. SIZE	29. MATL	30. MIL-SPEC	31. MIC NO.

WELD HISTORY

◆32. WELDING STANDARD: S9074-AR-GIB-010A/278	33. WELDING PROCEDURE:	34. DATA SHEET	35. POSITION: [ ] VERT [ ] HORZ [ ] FLAT [ ] OVHD [ ] FIXED [ ] ROLLED [ ] 45 DEG	
36. ACCESSIBILITY: [ ] 12"OR LESS [ ] UNRESTRICTED	37. PREHEAT TEMP	38. PREHEAT METHOD	39. POST HEAT. TEMP REQD: START TIME: STOP TIME:	
40. PURGE GAS:	41. FLOW RATE	42. SHIELD GAS	43. FLOW RATE	44. CUP SIZE / 45. TUNGSTEN SIZE

46. WELD LAYER	47. PROCESS	48. QUAL EXP DATE	49. AMPS	50. INTERPASS TEMP	51. WELDER SIGNATURE	52. DATE

53. INSPECTION DATA CONTAINED ON REVERSE OF THIS PAGE
REMARKS:

94. FINAL DISPOSITION: [ ] ACCEPT [ ] REJECT	95. NDT SUPERVISOR	DATE

THE PERSON DESIGNATED TO SIGN FOR AN ACTION VERIFIES, BASED ON PERSONAL OBSERVATION OR CERTIFIED RECORDS, AND CERTIFIES BY THEIR SIGNATURE THAT THE ACTION HAS BEEN PERFORMED IN ACCORDANCE WITH THE SPECIFIED REQUIREMENTS.

WELDING IN PROCESS CONTROL/NONDESTRUCTIVE TEST RECORD
QA FORM 20 (BACK)

NDT INSPECTION DATA

54. INSPECTION STANDARD	55. WELD CLASS	56. ACCEPTANCE STANDARD	57. ACCEPT CLASS

58. WELD PREP	59. INSP METHOD	60. ACCEPT/REJECT	61. NDT INSPECTOR SIGNATURE	62. DATE
COMPONENT A		[ ] ACCEPT [ ] REJECT		
COMPONENT B		[ ] ACCEPT [ ] REJECT		
63. JOINT FITUP		[ ] ACCEPT [ ] REJECT		

64. INSP LAYER	65. INSP METHOD	66. INSP PROC NO	67. ACCEPT/REJECT	68. NDT INSPECTOR SIGNATURE	69. DATE
			[ ] ACCEPT [ ] REJECT		
			[ ] ACCEPT [ ] REJECT		
			[ ] ACCEPT [ ] REJECT		
			[ ] ACCEPT [ ] REJECT		
			[ ] ACCEPT [ ] REJECT		

70. NDT INSPECTION DATA REPAIR NO._____ Defect: L W D

71. Repair Method: Excavation: L W D

72. INSP LAYER	73. INSP METHOD	74. INSP PROC NO.	75. ACCEPT/REJECT	76. NDT INSPECTOR SIGNATURE	77. DATE
			[ ] ACCEPT [ ] REJECT		
			[ ] ACCEPT [ ] REJECT		

78. NDT INSPECTION DATA REPAIR NO._____ Defect: L W D

79. Repair Method: Excavation: L W D

80. INSP LAYER	81. INSP METHOD	82. INSP PROC NO.	83. ACCEPT/REJECT	84. NDT INSPECTOR SIGNATURE	85. DATE
			[ ] ACCEPT [ ] REJECT		
			[ ] ACCEPT [ ] REJECT		

86. NDT INSPECTION DATA REPAIR NO._____ Defect: L W D

87. Repair Method: Excavation: L W D

88. INSP LAYER	89. INSP METHOD	90. INSP PROC NO.	91. ACCEPT/REJECT	92. NDT INSPECTOR SIGNATURE	93. DATE
			[ ] ACCEPT [ ] REJECT		
			[ ] ACCEPT [ ] REJECT		

53. REMARKS (Continued):

THE PERSON DESIGNATED TO SIGN FOR AN ACTION VERIFIES, BASED ON PERSONAL OBSERVATION OR CERTIFIED RECORDS, AND CERTIFIES BY THEIR SIGNATURE THAT THE ACTION HAS BEEN PERFORMED IN ACCORDANCE WITH THE SPECIFIED REQUIREMENTS.

WELDING IN PROCESS CONTROL/NONDESTRUCTIVE TEST RECORD
QA FORM 20 (FRONT)
When the form is used for production welding, the blocks marked with a ◆ must be completed by the planner.

◆1. PAGE 1 OF 2

◆2. SHIP USS BLUE RIDGE HULL NO. LCC19	◆3. JCN EM01-L261	◆4. CWP/REC SER. NO. N/A	◆5. LWC KTR	◆6. DATE 5 Apr 2025
◆7. SYSTEM 600 PSI Aux Steam System	◆8. COMPONENT MN COND CIRC PMP Steam Inlet Gage Piping	◆9. DWG NO. Mapping Plan Enclosure-02	◆10. CWP STEP NO. 5.8.2.3	
◆11. JOINT ID PJ-3F	◆12. JOINT DESIGN P-17	13. INST LOCATION: [ ] STBD COMPT: [ ] C/L FR: [ ] PORT	14. WELDED LOCATION: [ ] SHOP [ ] FIELD	

BASE MATERIAL DATA

15. COMP DATA	16. MATERIAL	17. SIZE	18. THICKNESS	19. MATL SPEC	20. MIC NO.
COMPONENT A:					
COMPONENT B:					
21. [ ] SEAL RING [ ] BACK RING/STRIP	22. MATERIAL	23. SIZE	24. THICKNESS	25. MATL SPEC	26. MIC NO.

WELDING MATERIAL SPECIFICATIONS AND DATA

27. TYPE OF FILLER(S)	28. SIZE	29. MATL	30. MIL-SPEC	31. MIC NO.

WELD HISTORY

◆32. WELDING STANDARD: S9074-AR-GIB-010A/278	33. WELDING PROCEDURE:	34. DATA SHEET	35. POSITION: [ ] VERT [ ] FLAT [ ] FIXED [ ] 45 DEG [ ] HORZ [ ] OVHD [ ] ROLLED	
36. ACCESSIBILITY: [ ] 12"OR LESS [ ] UNRESTRICTED	37. PREHEAT TEMP	38. PREHEAT METHOD	39. POST HEAT. TEMP REQD: START TIME: STOP TIME:	

40. PURGE GAS:	41. FLOW RATE	42. SHIELD GAS	43. FLOW RATE	44. CUP SIZE	45. TUNGSTEN SIZE

46. WELD LAYER	47. PROCESS	48. QUAL EXP DATE	49. AMPS	50. INTERPASS TEMP	51. WELDER SIGNATURE	52. DATE

53. INSPECTION DATA CONTAINED ON REVERSE OF THIS PAGE
REMARKS:

94. FINAL DISPOSITION: [ ] ACCEPT [ ] REJECT	95. NDT SUPERVISOR	DATE

THE PERSON DESIGNATED TO SIGN FOR AN ACTION VERIFIES, BASED ON PERSONAL OBSERVATION OR CERTIFIED RECORDS, AND CERTIFIES BY THEIR SIGNATURE THAT THE ACTION HAS BEEN PERFORMED IN ACCORDANCE WITH THE SPECIFIED REQUIREMENTS.

WELDING IN PROCESS CONTROL/NONDESTRUCTIVE TEST RECORD
QA FORM 20 (BACK)

NDT INSPECTION DATA

54. INSPECTION STANDARD	55. WELD CLASS	56. ACCEPTANCE STANDARD	57. ACCEPT CLASS

58. WELD PREP	59. INSP METHOD	60. ACCEPT/REJECT	61. NDT INSPECTOR SIGNATURE	62. DATE
COMPONENT A		[ ] ACCEPT [ ] REJECT		
COMPONENT B		[ ] ACCEPT [ ] REJECT		
63. JOINT FITUP		[ ] ACCEPT [ ] REJECT		

64. INSP LAYER	65. INSP METHOD	66. INSP PROC NO	67. ACCEPT/REJECT	68. NDT INSPECTOR SIGNATURE	69. DATE
			[ ] ACCEPT [ ] REJECT		
			[ ] ACCEPT [ ] REJECT		
			[ ] ACCEPT [ ] REJECT		
			[ ] ACCEPT [ ] REJECT		
			[ ] ACCEPT [ ] REJECT		

70. NDT INSPECTION DATA REPAIR NO._____ Defect: L W D

71. Repair Method: Excavation: L W D

72. INSP LAYER	73. INSP METHOD	74. INSP PROC NO.	75. ACCEPT/REJECT	76. NDT INSPECTOR SIGNATURE	77. DATE
			[ ] ACCEPT [ ] REJECT		
			[ ] ACCEPT [ ] REJECT		

78. NDT INSPECTION DATA REPAIR NO._____ Defect: L W D

79. Repair Method: Excavation: L W D

80. INSP LAYER	81. INSP METHOD	82. INSP PROC NO.	83. ACCEPT/REJECT	84. NDT INSPECTOR SIGNATURE	85. DATE
			[ ] ACCEPT [ ] REJECT		
			[ ] ACCEPT [ ] REJECT		

86. NDT INSPECTION DATA REPAIR NO._____ Defect: L W D

87. Repair Method: Excavation: L W D

88. INSP LAYER	89. INSP METHOD	90. INSP PROC NO.	91. ACCEPT/REJECT	92. NDT INSPECTOR SIGNATURE	93. DATE
			[ ] ACCEPT [ ] REJECT		
			[ ] ACCEPT [ ] REJECT		

53. REMARKS (Continued):

THE PERSON DESIGNATED TO SIGN FOR AN ACTION VERIFIES, BASED ON PERSONAL OBSERVATION OR CERTIFIED RECORDS, AND CERTIFIES BY THEIR SIGNATURE THAT THE ACTION HAS BEEN PERFORMED IN ACCORDANCE WITH THE SPECIFIED REQUIREMENTS.

WELDING IN PROCESS CONTROL/NONDESTRUCTIVE TEST RECORD
QA FORM 20 (FRONT)
When the form is used for production welding, the blocks marked with a ◆ must be completed by the planner.

◆1. PAGE 1 OF 2

◆2. SHIP USS BLUE RIDGE HULL NO. LCC19	◆3. JCN EM01-L261	◆4. CWP/REC SER. NO. N/A	◆5. LWC KTR	◆6. DATE 5 Apr 2025
◆7. SYSTEM 600 PSI Aux Steam System	◆8. COMPONENT MN COND CIRC PMP Steam Inlet Gage Piping	◆9. DWG NO. Mapping Plan Enclosure-02	◆10. CWP STEP NO. 5.8.2.3	
◆11. JOINT ID PJ-4F	◆12. JOINT DESIGN P-17	13. INST LOCATION: [ ] STBD COMPT: [ ] C/L FR: [ ] PORT	14. WELDED LOCATION: [ ] SHOP [ ] FIELD	

BASE MATERIAL DATA

15. COMP DATA	16. MATERIAL	17. SIZE	18. THICKNESS	19. MATL SPEC	20. MIC NO.
COMPONENT A:					
COMPONENT B:					
21. [ ] SEAL RING [ ] BACK RING/STRIP	22. MATERIAL	23. SIZE	24. THICKNESS	25. MATL SPEC	26. MIC NO.

WELDING MATERIAL SPECIFICATIONS AND DATA

27. TYPE OF FILLER(S)	28. SIZE	29. MATL	30. MIL-SPEC	31. MIC NO.

WELD HISTORY

◆32. WELDING STANDARD: S9074-AR-GIB-010A/278	33. WELDING PROCEDURE:	34. DATA SHEET	35. POSITION: [ ] VERT [ ] HORZ [ ] FLAT [ ] OVHD [ ] FIXED [ ] ROLLED [ ] 45 DEG	
36. ACCESSIBILITY: [ ] 12"OR LESS [ ] UNRESTRICTED	37. PREHEAT TEMP	38. PREHEAT METHOD	39. POST HEAT. TEMP REQD: START TIME: STOP TIME:	
40. PURGE GAS:	41. FLOW RATE	42. SHIELD GAS	43. FLOW RATE	44. CUP SIZE / 45. TUNGSTEN SIZE

46. WELD LAYER	47. PROCESS	48. QUAL EXP DATE	49. AMPS	50. INTERPASS TEMP	51. WELDER SIGNATURE	52. DATE

53. INSPECTION DATA CONTAINED ON REVERSE OF THIS PAGE
REMARKS:

94. FINAL DISPOSITION: [ ] ACCEPT [ ] REJECT	95. NDT SUPERVISOR	DATE

THE PERSON DESIGNATED TO SIGN FOR AN ACTION VERIFIES, BASED ON PERSONAL OBSERVATION OR CERTIFIED RECORDS, AND CERTIFIES BY THEIR SIGNATURE THAT THE ACTION HAS BEEN PERFORMED IN ACCORDANCE WITH THE SPECIFIED REQUIREMENTS.

WELDING IN PROCESS CONTROL/NONDESTRUCTIVE TEST RECORD
QA FORM 20 (BACK)

NDT INSPECTION DATA

54. INSPECTION STANDARD	55. WELD CLASS	56. ACCEPTANCE STANDARD	57. ACCEPT CLASS

58. WELD PREP	59. INSP METHOD	60. ACCEPT/REJECT	61. NDT INSPECTOR SIGNATURE	62. DATE
COMPONENT A		[ ] ACCEPT [ ] REJECT		
COMPONENT B		[ ] ACCEPT [ ] REJECT		
63. JOINT FITUP		[ ] ACCEPT [ ] REJECT		

64. INSP LAYER	65. INSP METHOD	66. INSP PROC NO	67. ACCEPT/REJECT	68. NDT INSPECTOR SIGNATURE	69. DATE
			[ ] ACCEPT [ ] REJECT		
			[ ] ACCEPT [ ] REJECT		
			[ ] ACCEPT [ ] REJECT		
			[ ] ACCEPT [ ] REJECT		
			[ ] ACCEPT [ ] REJECT		

70. NDT INSPECTION DATA REPAIR NO._____ Defect: L W D

71. Repair Method: Excavation: L W D

72. INSP LAYER	73. INSP METHOD	74. INSP PROC NO.	75. ACCEPT/REJECT	76. NDT INSPECTOR SIGNATURE	77. DATE
			[ ] ACCEPT [ ] REJECT		
			[ ] ACCEPT [ ] REJECT		

78. NDT INSPECTION DATA REPAIR NO._____ Defect: L W D

79. Repair Method: Excavation: L W D

80. INSP LAYER	81. INSP METHOD	82. INSP PROC NO.	83. ACCEPT/REJECT	84. NDT INSPECTOR SIGNATURE	85. DATE
			[ ] ACCEPT [ ] REJECT		
			[ ] ACCEPT [ ] REJECT		

86. NDT INSPECTION DATA REPAIR NO._____ Defect: L W D

87. Repair Method: Excavation: L W D

88. INSP LAYER	89. INSP METHOD	90. INSP PROC NO.	91. ACCEPT/REJECT	92. NDT INSPECTOR SIGNATURE	93. DATE
			[ ] ACCEPT [ ] REJECT		
			[ ] ACCEPT [ ] REJECT		

53. REMARKS (Continued):

THE PERSON DESIGNATED TO SIGN FOR AN ACTION VERIFIES, BASED ON PERSONAL OBSERVATION OR CERTIFIED RECORDS, AND CERTIFIES BY THEIR SIGNATURE THAT THE ACTION HAS BEEN PERFORMED IN ACCORDANCE WITH THE SPECIFIED REQUIREMENTS.

WELDING IN PROCESS CONTROL/NONDESTRUCTIVE TEST RECORD
QA FORM 20 (FRONT)
When the form is used for production welding, the blocks marked with a ◆ must be completed by the planner.

◆1. PAGE 1 OF 2

◆2. SHIP USS BLUE RIDGE HULL NO. LCC19	◆3. JCN EM01-L261	◆4. CWP/REC SER. NO. N/A	◆5. LWC KTR	◆6. DATE 5 Apr 2025
◆7. SYSTEM 600 PSI Aux Steam System	◆8. COMPONENT MN COND CIRC PMP Steam Inlet Gage Piping	◆9. DWG NO. Mapping Plan Enclosure-02	◆10. CWP STEP NO. 5.8.2.3	
◆11. JOINT ID PJ-5F	◆12. JOINT DESIGN P-14	13. INST LOCATION: [ ] STBD COMPT: [ ] C/L FR: [ ] PORT	14. WELDED LOCATION: [ ] SHOP [ ] FIELD	

BASE MATERIAL DATA

15. COMP DATA	16. MATERIAL	17. SIZE	18. THICKNESS	19. MATL SPEC	20. MIC NO.
COMPONENT A:					
COMPONENT B:					
21. [ ] SEAL RING [ ] BACK RING/STRIP	22. MATERIAL	23. SIZE	24. THICKNESS	25. MATL SPEC	26. MIC NO.

WELDING MATERIAL SPECIFICATIONS AND DATA

27. TYPE OF FILLER(S)	28. SIZE	29. MATL	30. MIL-SPEC	31. MIC NO.

WELD HISTORY

◆32. WELDING STANDARD: S9074-AR-GIB-010A/278	33. WELDING PROCEDURE:	34. DATA SHEET	35. POSITION: [ ] VERT [ ] HORZ [ ] FLAT [ ] OVHD [ ] FIXED [ ] ROLLED [ ] 45 DEG	
36. ACCESSIBILITY: [ ] 12"OR LESS [ ] UNRESTRICTED	37. PREHEAT TEMP	38. PREHEAT METHOD	39. POST HEAT. TEMP REQD: START TIME: STOP TIME:	
40. PURGE GAS:	41. FLOW RATE	42. SHIELD GAS	43. FLOW RATE	44. CUP SIZE / 45. TUNGSTEN SIZE

46. WELD LAYER	47. PROCESS	48. QUAL EXP DATE	49. AMPS	50. INTERPASS TEMP	51. WELDER SIGNATURE	52. DATE

53. INSPECTION DATA CONTAINED ON REVERSE OF THIS PAGE
REMARKS:

94. FINAL DISPOSITION: [ ] ACCEPT [ ] REJECT	95. NDT SUPERVISOR	DATE

THE PERSON DESIGNATED TO SIGN FOR AN ACTION VERIFIES, BASED ON PERSONAL OBSERVATION OR CERTIFIED RECORDS, AND CERTIFIES BY THEIR SIGNATURE THAT THE ACTION HAS BEEN PERFORMED IN ACCORDANCE WITH THE SPECIFIED REQUIREMENTS.

WELDING IN PROCESS CONTROL/NONDESTRUCTIVE TEST RECORD
QA FORM 20 (BACK)

NDT INSPECTION DATA

54. INSPECTION STANDARD	55. WELD CLASS	56. ACCEPTANCE STANDARD	57. ACCEPT CLASS

58. WELD PREP	59. INSP METHOD	60. ACCEPT/REJECT	61. NDT INSPECTOR SIGNATURE	62. DATE
COMPONENT A		[ ] ACCEPT [ ] REJECT		
COMPONENT B		[ ] ACCEPT [ ] REJECT		
63. JOINT FITUP		[ ] ACCEPT [ ] REJECT		

64. INSP LAYER	65. INSP METHOD	66. INSP PROC NO	67. ACCEPT/REJECT	68. NDT INSPECTOR SIGNATURE	69. DATE
			[ ] ACCEPT [ ] REJECT		
			[ ] ACCEPT [ ] REJECT		
			[ ] ACCEPT [ ] REJECT		
			[ ] ACCEPT [ ] REJECT		
			[ ] ACCEPT [ ] REJECT		

70. NDT INSPECTION DATA REPAIR NO._____ Defect: L W D

71. Repair Method: Excavation: L W D

72. INSP LAYER	73. INSP METHOD	74. INSP PROC NO.	75. ACCEPT/REJECT	76. NDT INSPECTOR SIGNATURE	77. DATE
			[ ] ACCEPT [ ] REJECT		
			[ ] ACCEPT [ ] REJECT		

78. NDT INSPECTION DATA REPAIR NO._____ Defect: L W D

79. Repair Method: Excavation: L W D

80. INSP LAYER	81. INSP METHOD	82. INSP PROC NO.	83. ACCEPT/REJECT	84. NDT INSPECTOR SIGNATURE	85. DATE
			[ ] ACCEPT [ ] REJECT		
			[ ] ACCEPT [ ] REJECT		

86. NDT INSPECTION DATA REPAIR NO._____ Defect: L W D

87. Repair Method: Excavation: L W D

88. INSP LAYER	89. INSP METHOD	90. INSP PROC NO.	91. ACCEPT/REJECT	92. NDT INSPECTOR SIGNATURE	93. DATE
			[ ] ACCEPT [ ] REJECT		
			[ ] ACCEPT [ ] REJECT		

53. REMARKS (Continued):

THE PERSON DESIGNATED TO SIGN FOR AN ACTION VERIFIES, BASED ON PERSONAL OBSERVATION OR CERTIFIED RECORDS, AND CERTIFIES BY THEIR SIGNATURE THAT THE ACTION HAS BEEN PERFORMED IN ACCORDANCE WITH THE SPECIFIED REQUIREMENTS.

WELDING IN PROCESS CONTROL/NONDESTRUCTIVE TEST RECORD
QA FORM 20 (FRONT)
When the form is used for production welding, the blocks marked with a ◆ must be completed by the planner.

◆1. PAGE 1 OF 2

◆2. SHIP USS BLUE RIDGE HULL NO. LCC19	◆3. JCN EM01-L261	◆4. CWP/REC SER. NO. N/A	◆5. LWC KTR	◆6. DATE 5 Apr 2025
◆7. SYSTEM 600 PSI Aux Steam System	◆8. COMPONENT MN COND CIRC PMP Steam Inlet Gage Piping	◆9. DWG NO. Mapping Plan Enclosure-02	◆10. CWP STEP NO. 5.8.2.3	
◆11. JOINT ID PJ-6F	◆12. JOINT DESIGN P-14	13. INST LOCATION: [ ] STBD COMPT: [ ] C/L FR: [ ] PORT	14. WELDED LOCATION: [ ] SHOP [ ] FIELD	

BASE MATERIAL DATA

15. COMP DATA	16. MATERIAL	17. SIZE	18. THICKNESS	19. MATL SPEC	20. MIC NO.
COMPONENT A:					
COMPONENT B:					
21. [ ] SEAL RING [ ] BACK RING/STRIP	22. MATERIAL	23. SIZE	24. THICKNESS	25. MATL SPEC	26. MIC NO.

WELDING MATERIAL SPECIFICATIONS AND DATA

27. TYPE OF FILLER(S)	28. SIZE	29. MATL	30. MIL-SPEC	31. MIC NO.

WELD HISTORY

◆32. WELDING STANDARD: S9074-AR-GIB-010A/278	33. WELDING PROCEDURE:	34. DATA SHEET	35. POSITION: [ ] VERT [ ] HORZ [ ] FLAT [ ] OVHD [ ] FIXED [ ] ROLLED [ ] 45 DEG	
36. ACCESSIBILITY: [ ] 12"OR LESS [ ] UNRESTRICTED	37. PREHEAT TEMP	38. PREHEAT METHOD	39. POST HEAT. TEMP REQD: START TIME: STOP TIME:	
40. PURGE GAS:	41. FLOW RATE	42. SHIELD GAS	43. FLOW RATE	44. CUP SIZE / 45. TUNGSTEN SIZE

46. WELD LAYER	47. PROCESS	48. QUAL EXP DATE	49. AMPS	50. INTERPASS TEMP	51. WELDER SIGNATURE	52. DATE

53. INSPECTION DATA CONTAINED ON REVERSE OF THIS PAGE
REMARKS:

94. FINAL DISPOSITION: [ ] ACCEPT [ ] REJECT	95. NDT SUPERVISOR	DATE

THE PERSON DESIGNATED TO SIGN FOR AN ACTION VERIFIES, BASED ON PERSONAL OBSERVATION OR CERTIFIED RECORDS, AND CERTIFIES BY THEIR SIGNATURE THAT THE ACTION HAS BEEN PERFORMED IN ACCORDANCE WITH THE SPECIFIED REQUIREMENTS.

WELDING IN PROCESS CONTROL/NONDESTRUCTIVE TEST RECORD
QA FORM 20 (BACK)

NDT INSPECTION DATA

54. INSPECTION STANDARD	55. WELD CLASS	56. ACCEPTANCE STANDARD	57. ACCEPT CLASS

58. WELD PREP	59. INSP METHOD	60. ACCEPT/REJECT	61. NDT INSPECTOR SIGNATURE	62. DATE
COMPONENT A		[ ] ACCEPT [ ] REJECT		
COMPONENT B		[ ] ACCEPT [ ] REJECT		
63. JOINT FITUP		[ ] ACCEPT [ ] REJECT		

64. INSP LAYER	65. INSP METHOD	66. INSP PROC NO	67. ACCEPT/REJECT	68. NDT INSPECTOR SIGNATURE	69. DATE
			[ ] ACCEPT [ ] REJECT		
			[ ] ACCEPT [ ] REJECT		
			[ ] ACCEPT [ ] REJECT		
			[ ] ACCEPT [ ] REJECT		
			[ ] ACCEPT [ ] REJECT		

70. NDT INSPECTION DATA REPAIR NO._____ Defect: L W D

71. Repair Method: Excavation: L W D

72. INSP LAYER	73. INSP METHOD	74. INSP PROC NO.	75. ACCEPT/REJECT	76. NDT INSPECTOR SIGNATURE	77. DATE
			[ ] ACCEPT [ ] REJECT		
			[ ] ACCEPT [ ] REJECT		

78. NDT INSPECTION DATA REPAIR NO._____ Defect: L W D

79. Repair Method: Excavation: L W D

80. INSP LAYER	81. INSP METHOD	82. INSP PROC NO.	83. ACCEPT/REJECT	84. NDT INSPECTOR SIGNATURE	85. DATE
			[ ] ACCEPT [ ] REJECT		
			[ ] ACCEPT [ ] REJECT		

86. NDT INSPECTION DATA REPAIR NO._____ Defect: L W D

87. Repair Method: Excavation: L W D

88. INSP LAYER	89. INSP METHOD	90. INSP PROC NO.	91. ACCEPT/REJECT	92. NDT INSPECTOR SIGNATURE	93. DATE
			[ ] ACCEPT [ ] REJECT		
			[ ] ACCEPT [ ] REJECT		

53. REMARKS (Continued):

THE PERSON DESIGNATED TO SIGN FOR AN ACTION VERIFIES, BASED ON PERSONAL OBSERVATION OR CERTIFIED RECORDS, AND CERTIFIES BY THEIR SIGNATURE THAT THE ACTION HAS BEEN PERFORMED IN ACCORDANCE WITH THE SPECIFIED REQUIREMENTS.

WELDING IN PROCESS CONTROL/NONDESTRUCTIVE TEST RECORD
QA FORM 20 (FRONT)
When the form is used for production welding, the blocks marked with a ◆ must be completed by the planner.

◆1. PAGE 1 OF 2

◆2. SHIP USS BLUE RIDGE HULL NO. LCC19	◆3. JCN EM01-L261	◆4. CWP/REC SER. NO. N/A	◆5. LWC KTR	◆6. DATE 5 Apr 2025
◆7. SYSTEM Main Turbine Gland Seal Steam System	◆8. COMPONENT Main Turbine Gland Seal Steam Gage Piping	◆9. DWG NO. Mapping Plan Enclosure-02	◆10. CWP STEP NO. 5.9.2.3	
◆11. JOINT ID PJ-1G	◆12. JOINT DESIGN P-14	13. INST LOCATION: [ ] STBD COMPT: [ ] C/L FR: [ ] PORT	14. WELDED LOCATION: [ ] SHOP [ ] FIELD	

BASE MATERIAL DATA

15. COMP DATA	16. MATERIAL	17. SIZE	18. THICKNESS	19. MATL SPEC	20. MIC NO.
COMPONENT A:					
COMPONENT B:					
21. [ ] SEAL RING [ ] BACK RING/STRIP	22. MATERIAL	23. SIZE	24. THICKNESS	25. MATL SPEC	26. MIC NO.

WELDING MATERIAL SPECIFICATIONS AND DATA

27. TYPE OF FILLER(S)	28. SIZE	29. MATL	30. MIL-SPEC	31. MIC NO.

WELD HISTORY

◆32. WELDING STANDARD: S9074-AR-GIB-010A/278	33. WELDING PROCEDURE:	34. DATA SHEET	35. POSITION: [ ] VERT [ ] HORZ [ ] FLAT [ ] OVHD [ ] FIXED [ ] ROLLED [ ] 45 DEG		
36. ACCESSIBILITY: [ ] 12"OR LESS [ ] UNRESTRICTED	37. PREHEAT TEMP	38. PREHEAT METHOD	39. POST HEAT. TEMP REQD: START TIME: STOP TIME:		
40. PURGE GAS:	41. FLOW RATE	42. SHIELD GAS	43. FLOW RATE	44. CUP SIZE	45. TUNGSTEN SIZE

46. WELD LAYER	47. PROCESS	48. QUAL EXP DATE	49. AMPS	50. INTERPASS TEMP	51. WELDER SIGNATURE	52. DATE

53. INSPECTION DATA CONTAINED ON REVERSE OF THIS PAGE
REMARKS:

94. FINAL DISPOSITION: [ ] ACCEPT [ ] REJECT	95. NDT SUPERVISOR	DATE

THE PERSON DESIGNATED TO SIGN FOR AN ACTION VERIFIES, BASED ON PERSONAL OBSERVATION OR CERTIFIED RECORDS, AND CERTIFIES BY THEIR SIGNATURE THAT THE ACTION HAS BEEN PERFORMED IN ACCORDANCE WITH THE SPECIFIED REQUIREMENTS.

WELDING IN PROCESS CONTROL/NONDESTRUCTIVE TEST RECORD
QA FORM 20 (BACK)

NDT INSPECTION DATA

54. INSPECTION STANDARD	55. WELD CLASS	56. ACCEPTANCE STANDARD	57. ACCEPT CLASS

58. WELD PREP	59. INSP METHOD	60. ACCEPT/REJECT	61. NDT INSPECTOR SIGNATURE	62. DATE
COMPONENT A		[ ] ACCEPT [ ] REJECT		
COMPONENT B		[ ] ACCEPT [ ] REJECT		
63. JOINT FITUP		[ ] ACCEPT [ ] REJECT		

64. INSP LAYER	65. INSP METHOD	66. INSP PROC NO	67. ACCEPT/REJECT	68. NDT INSPECTOR SIGNATURE	69. DATE
			[ ] ACCEPT [ ] REJECT		
			[ ] ACCEPT [ ] REJECT		
			[ ] ACCEPT [ ] REJECT		
			[ ] ACCEPT [ ] REJECT		
			[ ] ACCEPT [ ] REJECT		

70. NDT INSPECTION DATA REPAIR NO._____ Defect: L W D

71. Repair Method: Excavation: L W D

72. INSP LAYER	73. INSP METHOD	74. INSP PROC NO.	75. ACCEPT/REJECT	76. NDT INSPECTOR SIGNATURE	77. DATE
			[ ] ACCEPT [ ] REJECT		
			[ ] ACCEPT [ ] REJECT		

78. NDT INSPECTION DATA REPAIR NO._____ Defect: L W D

79. Repair Method: Excavation: L W D

80. INSP LAYER	81. INSP METHOD	82. INSP PROC NO.	83. ACCEPT/REJECT	84. NDT INSPECTOR SIGNATURE	85. DATE
			[ ] ACCEPT [ ] REJECT		
			[ ] ACCEPT [ ] REJECT		

86. NDT INSPECTION DATA REPAIR NO._____ Defect: L W D

87. Repair Method: Excavation: L W D

88. INSP LAYER	89. INSP METHOD	90. INSP PROC NO.	91. ACCEPT/REJECT	92. NDT INSPECTOR SIGNATURE	93. DATE
			[ ] ACCEPT [ ] REJECT		
			[ ] ACCEPT [ ] REJECT		

53. REMARKS (Continued):

THE PERSON DESIGNATED TO SIGN FOR AN ACTION VERIFIES, BASED ON PERSONAL OBSERVATION OR CERTIFIED RECORDS, AND CERTIFIES BY THEIR SIGNATURE THAT THE ACTION HAS BEEN PERFORMED IN ACCORDANCE WITH THE SPECIFIED REQUIREMENTS.

WELDING IN PROCESS CONTROL/NONDESTRUCTIVE TEST RECORD
QA FORM 20 (FRONT)
When the form is used for production welding, the blocks marked with a ◆ must be completed by the planner.

◆1. PAGE 1 OF 2

◆2. SHIP USS BLUE RIDGE HULL NO. LCC19	◆3. JCN EM01-L261	◆4. CWP/REC SER. NO. N/A	◆5. LWC KTR	◆6. DATE 5 Apr 2025
◆7. SYSTEM Main Turbine Gland Seal Steam System	◆8. COMPONENT Main Turbine Gland Seal Steam Gage Piping	◆9. DWG NO. Mapping Plan Enclosure-02	◆10. CWP STEP NO. 5.9.2.3	
◆11. JOINT ID PJ-2G	◆12. JOINT DESIGN P-14	13. INST LOCATION: [ ] STBD COMPT: [ ] C/L FR: [ ] PORT	14. WELDED LOCATION: [ ] SHOP [ ] FIELD	

BASE MATERIAL DATA

15. COMP DATA	16. MATERIAL	17. SIZE	18. THICKNESS	19. MATL SPEC	20. MIC NO.
COMPONENT A:					
COMPONENT B:					
21. [ ] SEAL RING [ ] BACK RING/STRIP	22. MATERIAL	23. SIZE	24. THICKNESS	25. MATL SPEC	26. MIC NO.

WELDING MATERIAL SPECIFICATIONS AND DATA

27. TYPE OF FILLER(S)	28. SIZE	29. MATL	30. MIL-SPEC	31. MIC NO.

WELD HISTORY

◆32. WELDING STANDARD: S9074-AR-GIB-010A/278	33. WELDING PROCEDURE:	34. DATA SHEET	35. POSITION: [ ] VERT [ ] HORZ [ ] FLAT [ ] OVHD [ ] FIXED [ ] ROLLED [ ] 45 DEG		
36. ACCESSIBILITY: [ ] 12"OR LESS [ ] UNRESTRICTED	37. PREHEAT TEMP	38. PREHEAT METHOD	39. POST HEAT. TEMP REQD: START TIME: STOP TIME:		
40. PURGE GAS:	41. FLOW RATE	42. SHIELD GAS	43. FLOW RATE	44. CUP SIZE	45. TUNGSTEN SIZE

46. WELD LAYER	47. PROCESS	48. QUAL EXP DATE	49. AMPS	50. INTERPASS TEMP	51. WELDER SIGNATURE	52. DATE

53. INSPECTION DATA CONTAINED ON REVERSE OF THIS PAGE
REMARKS:

94. FINAL DISPOSITION: [ ] ACCEPT [ ] REJECT	95. NDT SUPERVISOR	DATE

THE PERSON DESIGNATED TO SIGN FOR AN ACTION VERIFIES, BASED ON PERSONAL OBSERVATION OR CERTIFIED RECORDS, AND CERTIFIES BY THEIR SIGNATURE THAT THE ACTION HAS BEEN PERFORMED IN ACCORDANCE WITH THE SPECIFIED REQUIREMENTS.

WELDING IN PROCESS CONTROL/NONDESTRUCTIVE TEST RECORD
QA FORM 20 (BACK)

NDT INSPECTION DATA

54. INSPECTION STANDARD	55. WELD CLASS	56. ACCEPTANCE STANDARD	57. ACCEPT CLASS

58. WELD PREP	59. INSP METHOD	60. ACCEPT/REJECT	61. NDT INSPECTOR SIGNATURE	62. DATE
COMPONENT A		[ ] ACCEPT [ ] REJECT		
COMPONENT B		[ ] ACCEPT [ ] REJECT		
63. JOINT FITUP		[ ] ACCEPT [ ] REJECT		

64. INSP LAYER	65. INSP METHOD	66. INSP PROC NO	67. ACCEPT/REJECT	68. NDT INSPECTOR SIGNATURE	69. DATE
			[ ] ACCEPT [ ] REJECT		
			[ ] ACCEPT [ ] REJECT		
			[ ] ACCEPT [ ] REJECT		
			[ ] ACCEPT [ ] REJECT		
			[ ] ACCEPT [ ] REJECT		

70. NDT INSPECTION DATA REPAIR NO._____ Defect: L W D

71. Repair Method: Excavation: L W D

72. INSP LAYER	73. INSP METHOD	74. INSP PROC NO.	75. ACCEPT/REJECT	76. NDT INSPECTOR SIGNATURE	77. DATE
			[ ] ACCEPT [ ] REJECT		
			[ ] ACCEPT [ ] REJECT		

78. NDT INSPECTION DATA REPAIR NO._____ Defect: L W D

79. Repair Method: Excavation: L W D

80. INSP LAYER	81. INSP METHOD	82. INSP PROC NO.	83. ACCEPT/REJECT	84. NDT INSPECTOR SIGNATURE	85. DATE
			[ ] ACCEPT [ ] REJECT		
			[ ] ACCEPT [ ] REJECT		

86. NDT INSPECTION DATA REPAIR NO._____ Defect: L W D

87. Repair Method: Excavation: L W D

88. INSP LAYER	89. INSP METHOD	90. INSP PROC NO.	91. ACCEPT/REJECT	92. NDT INSPECTOR SIGNATURE	93. DATE
			[ ] ACCEPT [ ] REJECT		
			[ ] ACCEPT [ ] REJECT		

53. REMARKS (Continued):

THE PERSON DESIGNATED TO SIGN FOR AN ACTION VERIFIES, BASED ON PERSONAL OBSERVATION OR CERTIFIED RECORDS, AND CERTIFIES BY THEIR SIGNATURE THAT THE ACTION HAS BEEN PERFORMED IN ACCORDANCE WITH THE SPECIFIED REQUIREMENTS.

WELDING IN PROCESS CONTROL/NONDESTRUCTIVE TEST RECORD
QA FORM 20 (FRONT)
When the form is used for production welding, the blocks marked with a ◆ must be completed by the planner.

◆1. PAGE 1 OF 2

◆2. SHIP USS BLUE RIDGE HULL NO. LCC19	◆3. JCN EM01-L261	◆4. CWP/REC SER. NO. N/A	◆5. LWC KTR	◆6. DATE 5 Apr 2025
◆7. SYSTEM Main Turbine Gland Seal Steam System	◆8. COMPONENT Main Turbine Gland Seal Steam Gage Piping	◆9. DWG NO. Mapping Plan Enclosure-02	◆10. CWP STEP NO. 5.9.2.3	
◆11. JOINT ID PJ-3G	◆12. JOINT DESIGN P-17	13. INST LOCATION: [ ] STBD COMPT: [ ] C/L FR: [ ] PORT	14. WELDED LOCATION: [ ] SHOP [ ] FIELD	

BASE MATERIAL DATA

15. COMP DATA	16. MATERIAL	17. SIZE	18. THICKNESS	19. MATL SPEC	20. MIC NO.
COMPONENT A:					
COMPONENT B:					
21. [ ] SEAL RING [ ] BACK RING/STRIP	22. MATERIAL	23. SIZE	24. THICKNESS	25. MATL SPEC	26. MIC NO.

WELDING MATERIAL SPECIFICATIONS AND DATA

27. TYPE OF FILLER(S)	28. SIZE	29. MATL	30. MIL-SPEC	31. MIC NO.

WELD HISTORY

◆32. WELDING STANDARD: S9074-AR-GIB-010A/278	33. WELDING PROCEDURE:	34. DATA SHEET	35. POSITION: [ ] VERT [ ] HORZ [ ] FLAT [ ] OVHD [ ] FIXED [ ] ROLLED [ ] 45 DEG		
36. ACCESSIBILITY: [ ] 12"OR LESS [ ] UNRESTRICTED	37. PREHEAT TEMP	38. PREHEAT METHOD	39. POST HEAT. TEMP REQD: START TIME: STOP TIME:		
40. PURGE GAS:	41. FLOW RATE	42. SHIELD GAS	43. FLOW RATE	44. CUP SIZE	45. TUNGSTEN SIZE

46. WELD LAYER	47. PROCESS	48. QUAL EXP DATE	49. AMPS	50. INTERPASS TEMP	51. WELDER SIGNATURE	52. DATE

53. INSPECTION DATA CONTAINED ON REVERSE OF THIS PAGE
REMARKS:

94. FINAL DISPOSITION: [ ] ACCEPT [ ] REJECT	95. NDT SUPERVISOR	DATE

THE PERSON DESIGNATED TO SIGN FOR AN ACTION VERIFIES, BASED ON PERSONAL OBSERVATION OR CERTIFIED RECORDS, AND CERTIFIES BY THEIR SIGNATURE THAT THE ACTION HAS BEEN PERFORMED IN ACCORDANCE WITH THE SPECIFIED REQUIREMENTS.

WELDING IN PROCESS CONTROL/NONDESTRUCTIVE TEST RECORD
QA FORM 20 (BACK)

NDT INSPECTION DATA

54. INSPECTION STANDARD	55. WELD CLASS	56. ACCEPTANCE STANDARD	57. ACCEPT CLASS

58. WELD PREP	59. INSP METHOD	60. ACCEPT/REJECT	61. NDT INSPECTOR SIGNATURE	62. DATE
COMPONENT A		[ ] ACCEPT [ ] REJECT		
COMPONENT B		[ ] ACCEPT [ ] REJECT		
63. JOINT FITUP		[ ] ACCEPT [ ] REJECT		

64. INSP LAYER	65. INSP METHOD	66. INSP PROC NO	67. ACCEPT/REJECT	68. NDT INSPECTOR SIGNATURE	69. DATE
			[ ] ACCEPT [ ] REJECT		
			[ ] ACCEPT [ ] REJECT		
			[ ] ACCEPT [ ] REJECT		
			[ ] ACCEPT [ ] REJECT		
			[ ] ACCEPT [ ] REJECT		

70. NDT INSPECTION DATA REPAIR NO._____ Defect: L W D

71. Repair Method: Excavation: L W D

72. INSP LAYER	73. INSP METHOD	74. INSP PROC NO.	75. ACCEPT/REJECT	76. NDT INSPECTOR SIGNATURE	77. DATE
			[ ] ACCEPT [ ] REJECT		
			[ ] ACCEPT [ ] REJECT		

78. NDT INSPECTION DATA REPAIR NO._____ Defect: L W D

79. Repair Method: Excavation: L W D

80. INSP LAYER	81. INSP METHOD	82. INSP PROC NO.	83. ACCEPT/REJECT	84. NDT INSPECTOR SIGNATURE	85. DATE
			[ ] ACCEPT [ ] REJECT		
			[ ] ACCEPT [ ] REJECT		

86. NDT INSPECTION DATA REPAIR NO._____ Defect: L W D

87. Repair Method: Excavation: L W D

88. INSP LAYER	89. INSP METHOD	90. INSP PROC NO.	91. ACCEPT/REJECT	92. NDT INSPECTOR SIGNATURE	93. DATE
			[ ] ACCEPT [ ] REJECT		
			[ ] ACCEPT [ ] REJECT		

53. REMARKS (Continued):

THE PERSON DESIGNATED TO SIGN FOR AN ACTION VERIFIES, BASED ON PERSONAL OBSERVATION OR CERTIFIED RECORDS, AND CERTIFIES BY THEIR SIGNATURE THAT THE ACTION HAS BEEN PERFORMED IN ACCORDANCE WITH THE SPECIFIED REQUIREMENTS.

WELDING IN PROCESS CONTROL/NONDESTRUCTIVE TEST RECORD
QA FORM 20 (FRONT)
When the form is used for production welding, the blocks marked with a ◆ must be completed by the planner.

◆1. PAGE 1 OF 2

◆2. SHIP USS BLUE RIDGE HULL NO. LCC19	◆3. JCN EM01-L261	◆4. CWP/REC SER. NO. N/A	◆5. LWC KTR	◆6. DATE 5 Apr 2025
◆7. SYSTEM Main Turbine Gland Seal Steam System	◆8. COMPONENT Main Turbine Gland Seal Steam Gage Piping	◆9. DWG NO. Mapping Plan Enclosure-02	◆10. CWP STEP NO. 5.9.2.3	
◆11. JOINT ID PJ-4G	◆12. JOINT DESIGN P-17	13. INST LOCATION: [ ] STBD COMPT: [ ] C/L FR: [ ] PORT	14. WELDED LOCATION: [ ] SHOP [ ] FIELD	

BASE MATERIAL DATA

15. COMP DATA	16. MATERIAL	17. SIZE	18. THICKNESS	19. MATL SPEC	20. MIC NO.
COMPONENT A:					
COMPONENT B:					
21. [ ] SEAL RING [ ] BACK RING/STRIP	22. MATERIAL	23. SIZE	24. THICKNESS	25. MATL SPEC	26. MIC NO.

WELDING MATERIAL SPECIFICATIONS AND DATA

27. TYPE OF FILLER(S)	28. SIZE	29. MATL	30. MIL-SPEC	31. MIC NO.

WELD HISTORY

◆32. WELDING STANDARD: S9074-AR-GIB-010A/278	33. WELDING PROCEDURE:	34. DATA SHEET	35. POSITION: [ ] VERT [ ] HORZ [ ] FLAT [ ] OVHD [ ] FIXED [ ] ROLLED [ ] 45 DEG		
36. ACCESSIBILITY: [ ] 12"OR LESS [ ] UNRESTRICTED	37. PREHEAT TEMP	38. PREHEAT METHOD	39. POST HEAT. TEMP REQD: START TIME: STOP TIME:		
40. PURGE GAS:	41. FLOW RATE	42. SHIELD GAS	43. FLOW RATE	44. CUP SIZE	45. TUNGSTEN SIZE

46. WELD LAYER	47. PROCESS	48. QUAL EXP DATE	49. AMPS	50. INTERPASS TEMP	51. WELDER SIGNATURE	52. DATE

53. INSPECTION DATA CONTAINED ON REVERSE OF THIS PAGE
REMARKS:

94. FINAL DISPOSITION: [ ] ACCEPT [ ] REJECT	95. NDT SUPERVISOR	DATE

THE PERSON DESIGNATED TO SIGN FOR AN ACTION VERIFIES, BASED ON PERSONAL OBSERVATION OR CERTIFIED RECORDS, AND CERTIFIES BY THEIR SIGNATURE THAT THE ACTION HAS BEEN PERFORMED IN ACCORDANCE WITH THE SPECIFIED REQUIREMENTS.

WELDING IN PROCESS CONTROL/NONDESTRUCTIVE TEST RECORD
QA FORM 20 (BACK)

NDT INSPECTION DATA

54. INSPECTION STANDARD	55. WELD CLASS	56. ACCEPTANCE STANDARD	57. ACCEPT CLASS

58. WELD PREP	59. INSP METHOD	60. ACCEPT/REJECT	61. NDT INSPECTOR SIGNATURE	62. DATE
COMPONENT A		[ ] ACCEPT [ ] REJECT		
COMPONENT B		[ ] ACCEPT [ ] REJECT		
63. JOINT FITUP		[ ] ACCEPT [ ] REJECT		

64. INSP LAYER	65. INSP METHOD	66. INSP PROC NO	67. ACCEPT/REJECT	68. NDT INSPECTOR SIGNATURE	69. DATE
			[ ] ACCEPT [ ] REJECT		
			[ ] ACCEPT [ ] REJECT		
			[ ] ACCEPT [ ] REJECT		
			[ ] ACCEPT [ ] REJECT		
			[ ] ACCEPT [ ] REJECT		

70. NDT INSPECTION DATA REPAIR NO._____ Defect: L W D

71. Repair Method: Excavation: L W D

72. INSP LAYER	73. INSP METHOD	74. INSP PROC NO.	75. ACCEPT/REJECT	76. NDT INSPECTOR SIGNATURE	77. DATE
			[ ] ACCEPT [ ] REJECT		
			[ ] ACCEPT [ ] REJECT		

78. NDT INSPECTION DATA REPAIR NO._____ Defect: L W D

79. Repair Method: Excavation: L W D

80. INSP LAYER	81. INSP METHOD	82. INSP PROC NO.	83. ACCEPT/REJECT	84. NDT INSPECTOR SIGNATURE	85. DATE
			[ ] ACCEPT [ ] REJECT		
			[ ] ACCEPT [ ] REJECT		

86. NDT INSPECTION DATA REPAIR NO._____ Defect: L W D

87. Repair Method: Excavation: L W D

88. INSP LAYER	89. INSP METHOD	90. INSP PROC NO.	91. ACCEPT/REJECT	92. NDT INSPECTOR SIGNATURE	93. DATE
			[ ] ACCEPT [ ] REJECT		
			[ ] ACCEPT [ ] REJECT		

53. REMARKS (Continued):

THE PERSON DESIGNATED TO SIGN FOR AN ACTION VERIFIES, BASED ON PERSONAL OBSERVATION OR CERTIFIED RECORDS, AND CERTIFIES BY THEIR SIGNATURE THAT THE ACTION HAS BEEN PERFORMED IN ACCORDANCE WITH THE SPECIFIED REQUIREMENTS.

WELDING IN PROCESS CONTROL/NONDESTRUCTIVE TEST RECORD
QA FORM 20 (FRONT)
When the form is used for production welding, the blocks marked with a ◆ must be completed by the planner.

◆1. PAGE 1 OF 2

◆2. SHIP USS BLUE RIDGE HULL NO. LCC19	◆3. JCN EM01-L261	◆4. CWP/REC SER. NO. N/A	◆5. LWC KTR	◆6. DATE 5 Apr 2025
◆7. SYSTEM Main Turbine Gland Seal Steam System	◆8. COMPONENT Main Turbine Gland Seal Steam Gage Piping	◆9. DWG NO. Mapping Plan Enclosure-02	◆10. CWP STEP NO. 5.9.2.3	
◆11. JOINT ID PJ-5G	◆12. JOINT DESIGN P-14	13. INST LOCATION: [ ] STBD COMPT: [ ] C/L FR: [ ] PORT	14. WELDED LOCATION: [ ] SHOP [ ] FIELD	

BASE MATERIAL DATA

15. COMP DATA	16. MATERIAL	17. SIZE	18. THICKNESS	19. MATL SPEC	20. MIC NO.
COMPONENT A:					
COMPONENT B:					
21. [ ] SEAL RING [ ] BACK RING/STRIP	22. MATERIAL	23. SIZE	24. THICKNESS	25. MATL SPEC	26. MIC NO.

WELDING MATERIAL SPECIFICATIONS AND DATA

27. TYPE OF FILLER(S)	28. SIZE	29. MATL	30. MIL-SPEC	31. MIC NO.

WELD HISTORY

◆32. WELDING STANDARD: S9074-AR-GIB-010A/278	33. WELDING PROCEDURE:	34. DATA SHEET	35. POSITION: [ ] VERT [ ] FLAT [ ] FIXED [ ] 45 DEG [ ] HORZ [ ] OVHD [ ] ROLLED	
36. ACCESSIBILITY: [ ] 12"OR LESS [ ] UNRESTRICTED	37. PREHEAT TEMP	38. PREHEAT METHOD	39. POST HEAT. TEMP REQD: START TIME: STOP TIME:	
40. PURGE GAS:	41. FLOW RATE	42. SHIELD GAS	43. FLOW RATE	44. CUP SIZE / 45. TUNGSTEN SIZE

46. WELD LAYER	47. PROCESS	48. QUAL EXP DATE	49. AMPS	50. INTERPASS TEMP	51. WELDER SIGNATURE	52. DATE

53. INSPECTION DATA CONTAINED ON REVERSE OF THIS PAGE
REMARKS:

94. FINAL DISPOSITION: [ ] ACCEPT [ ] REJECT	95. NDT SUPERVISOR DATE

THE PERSON DESIGNATED TO SIGN FOR AN ACTION VERIFIES, BASED ON PERSONAL OBSERVATION OR CERTIFIED RECORDS, AND CERTIFIES BY THEIR SIGNATURE THAT THE ACTION HAS BEEN PERFORMED IN ACCORDANCE WITH THE SPECIFIED REQUIREMENTS.

WELDING IN PROCESS CONTROL/NONDESTRUCTIVE TEST RECORD
QA FORM 20 (BACK)

NDT INSPECTION DATA

54. INSPECTION STANDARD	55. WELD CLASS	56. ACCEPTANCE STANDARD	57. ACCEPT CLASS

58. WELD PREP	59. INSP METHOD	60. ACCEPT/REJECT	61. NDT INSPECTOR SIGNATURE	62. DATE
COMPONENT A		[ ] ACCEPT [ ] REJECT		
COMPONENT B		[ ] ACCEPT [ ] REJECT		
63. JOINT FITUP		[ ] ACCEPT [ ] REJECT		

64. INSP LAYER	65. INSP METHOD	66. INSP PROC NO	67. ACCEPT/REJECT	68. NDT INSPECTOR SIGNATURE	69. DATE
			[ ] ACCEPT [ ] REJECT		
			[ ] ACCEPT [ ] REJECT		
			[ ] ACCEPT [ ] REJECT		
			[ ] ACCEPT [ ] REJECT		
			[ ] ACCEPT [ ] REJECT		

70. NDT INSPECTION DATA REPAIR NO._____ Defect: L W D

71. Repair Method: Excavation: L W D

72. INSP LAYER	73. INSP METHOD	74. INSP PROC NO.	75. ACCEPT/REJECT	76. NDT INSPECTOR SIGNATURE	77. DATE
			[ ] ACCEPT [ ] REJECT		
			[ ] ACCEPT [ ] REJECT		

78. NDT INSPECTION DATA REPAIR NO._____ Defect: L W D

79. Repair Method: Excavation: L W D

80. INSP LAYER	81. INSP METHOD	82. INSP PROC NO.	83. ACCEPT/REJECT	84. NDT INSPECTOR SIGNATURE	85. DATE
			[ ] ACCEPT [ ] REJECT		
			[ ] ACCEPT [ ] REJECT		

86. NDT INSPECTION DATA REPAIR NO._____ Defect: L W D

87. Repair Method: Excavation: L W D

88. INSP LAYER	89. INSP METHOD	90. INSP PROC NO.	91. ACCEPT/REJECT	92. NDT INSPECTOR SIGNATURE	93. DATE
			[ ] ACCEPT [ ] REJECT		
			[ ] ACCEPT [ ] REJECT		

53. REMARKS (Continued):

THE PERSON DESIGNATED TO SIGN FOR AN ACTION VERIFIES, BASED ON PERSONAL OBSERVATION OR CERTIFIED RECORDS, AND CERTIFIES BY THEIR SIGNATURE THAT THE ACTION HAS BEEN PERFORMED IN ACCORDANCE WITH THE SPECIFIED REQUIREMENTS.

WELDING IN PROCESS CONTROL/NONDESTRUCTIVE TEST RECORD
QA FORM 20 (FRONT)
When the form is used for production welding, the blocks marked with a ◆ must be completed by the planner.

◆1. PAGE 1 OF 2

◆2. SHIP USS BLUE RIDGE HULL NO. LCC19	◆3. JCN EM01-L261	◆4. CWP/REC SER. NO. N/A	◆5. LWC KTR	◆6. DATE 5 Apr 2025
◆7. SYSTEM Main Turbine Gland Seal Steam System	◆8. COMPONENT Main Turbine Gland Seal Steam Gage Piping	◆9. DWG NO. Mapping Plan Enclosure-02	◆10. CWP STEP NO. 5.9.2.3	
◆11. JOINT ID PJ-6G	◆12. JOINT DESIGN P-14	13. INST LOCATION: [ ] STBD COMPT: [ ] C/L FR: [ ] PORT	14. WELDED LOCATION: [ ] SHOP [ ] FIELD	

BASE MATERIAL DATA

15. COMP DATA	16. MATERIAL	17. SIZE	18. THICKNESS	19. MATL SPEC	20. MIC NO.
COMPONENT A:					
COMPONENT B:					
21. [ ] SEAL RING [ ] BACK RING/STRIP	22. MATERIAL	23. SIZE	24. THICKNESS	25. MATL SPEC	26. MIC NO.

WELDING MATERIAL SPECIFICATIONS AND DATA

27. TYPE OF FILLER(S)	28. SIZE	29. MATL	30. MIL-SPEC	31. MIC NO.

WELD HISTORY

◆32. WELDING STANDARD: S9074-AR-GIB-010A/278	33. WELDING PROCEDURE:	34. DATA SHEET	35. POSITION: [ ] VERT [ ] HORZ [ ] FLAT [ ] OVHD [ ] FIXED [ ] ROLLED [ ] 45 DEG		
36. ACCESSIBILITY: [ ] 12"OR LESS [ ] UNRESTRICTED	37. PREHEAT TEMP	38. PREHEAT METHOD	39. POST HEAT. TEMP REQD: START TIME: STOP TIME:		
40. PURGE GAS:	41. FLOW RATE	42. SHIELD GAS	43. FLOW RATE	44. CUP SIZE	45. TUNGSTEN SIZE

46. WELD LAYER	47. PROCESS	48. QUAL EXP DATE	49. AMPS	50. INTERPASS TEMP	51. WELDER SIGNATURE	52. DATE

53. INSPECTION DATA CONTAINED ON REVERSE OF THIS PAGE
REMARKS:

94. FINAL DISPOSITION: [ ] ACCEPT [ ] REJECT	95. NDT SUPERVISOR DATE

THE PERSON DESIGNATED TO SIGN FOR AN ACTION VERIFIES, BASED ON PERSONAL OBSERVATION OR CERTIFIED RECORDS, AND CERTIFIES BY THEIR SIGNATURE THAT THE ACTION HAS BEEN PERFORMED IN ACCORDANCE WITH THE SPECIFIED REQUIREMENTS.

WELDING IN PROCESS CONTROL/NONDESTRUCTIVE TEST RECORD
QA FORM 20 (BACK) PAGE 2 OF 2

NDT INSPECTION DATA

54. INSPECTION STANDARD	55. WELD CLASS	56. ACCEPTANCE STANDARD	57. ACCEPT CLASS

58. WELD PREP	59. INSP METHOD	60. ACCEPT/REJECT	61. NDT INSPECTOR SIGNATURE	62. DATE
COMPONENT A		[ ] ACCEPT [ ] REJECT		
COMPONENT B		[ ] ACCEPT [ ] REJECT		
63. JOINT FITUP		[ ] ACCEPT [ ] REJECT		

64. INSP LAYER	65. INSP METHOD	66. INSP PROC NO	67. ACCEPT/REJECT	68. NDT INSPECTOR SIGNATURE	69. DATE
			[ ] ACCEPT [ ] REJECT		
			[ ] ACCEPT [ ] REJECT		
			[ ] ACCEPT [ ] REJECT		
			[ ] ACCEPT [ ] REJECT		
			[ ] ACCEPT [ ] REJECT		

70. NDT INSPECTION DATA REPAIR NO._____ Defect: L W D

71. Repair Method: Excavation: L W D

72. INSP LAYER	73. INSP METHOD	74. INSP PROC NO.	75. ACCEPT/REJECT	76. NDT INSPECTOR SIGNATURE	77. DATE
			[ ] ACCEPT [ ] REJECT		
			[ ] ACCEPT [ ] REJECT		

78. NDT INSPECTION DATA REPAIR NO._____ Defect: L W D

79. Repair Method: Excavation: L W D

80. INSP LAYER	81. INSP METHOD	82. INSP PROC NO.	83. ACCEPT/REJECT	84. NDT INSPECTOR SIGNATURE	85. DATE
			[ ] ACCEPT [ ] REJECT		
			[ ] ACCEPT [ ] REJECT		

86. NDT INSPECTION DATA REPAIR NO._____ Defect: L W D

87. Repair Method: Excavation: L W D

88. INSP LAYER	89. INSP METHOD	90. INSP PROC NO.	91. ACCEPT/REJECT	92. NDT INSPECTOR SIGNATURE	93. DATE
			[ ] ACCEPT [ ] REJECT		
			[ ] ACCEPT [ ] REJECT		

53. REMARKS (Continued):

THE PERSON DESIGNATED TO SIGN FOR AN ACTION VERIFIES, BASED ON PERSONAL OBSERVATION OR CERTIFIED RECORDS, AND CERTIFIES BY THEIR SIGNATURE THAT THE ACTION HAS BEEN PERFORMED IN ACCORDANCE WITH THE SPECIFIED REQUIREMENTS.

WELDING IN PROCESS CONTROL/NONDESTRUCTIVE TEST RECORD
QA FORM 20 (FRONT)
When the form is used for production welding, the blocks marked with a ◆ must be completed by the planner.

◆1. PAGE 1 OF 2

◆2. SHIP USS BLUE RIDGE HULL NO. LCC19	◆3. JCN EM01-L261	◆4. CWP/REC SER. NO. N/A	◆5. LWC KTR	◆6. DATE 5 Apr 2025
◆7. SYSTEM Main Feedwater System	◆8. COMPONENT 1A Boiler Main Feedwater Discharge Gage Piping	◆9. DWG NO. Mapping Plan Enclosure-02	◆10. CWP STEP NO. 5.10.2.3	

◆11. JOINT ID PJ-1H	◆12. JOINT DESIGN P-14	13. INST LOCATION: [ ] STBD COMPT: [ ] C/L FR: [ ] PORT	14. WELDED LOCATION: [ ] SHOP [ ] FIELD

BASE MATERIAL DATA

15. COMP DATA	16. MATERIAL	17. SIZE	18. THICKNESS	19. MATL SPEC	20. MIC NO.
COMPONENT A:					
COMPONENT B:					
21. [ ] SEAL RING [ ] BACK RING/STRIP	22. MATERIAL	23. SIZE	24. THICKNESS	25. MATL SPEC	26. MIC NO.

WELDING MATERIAL SPECIFICATIONS AND DATA

27. TYPE OF FILLER(S)	28. SIZE	29. MATL	30. MIL-SPEC	31. MIC NO.

WELD HISTORY

◆32. WELDING STANDARD: S9074-AR-GIB-010A/278	33. WELDING PROCEDURE:	34. DATA SHEET	35. POSITION: [ ] VERT [ ] FLAT [ ] FIXED [ ] 45 DEG [ ] HORZ [ ] OVHD [ ] ROLLED

36. ACCESSIBILITY: [ ] 12"OR LESS [ ] UNRESTRICTED	37. PREHEAT TEMP	38. PREHEAT METHOD	39. POST HEAT. START TIME: TEMP REQD: STOP TIME:

40. PURGE GAS:	41. FLOW RATE	42. SHIELD GAS	43. FLOW RATE	44. CUP SIZE	45. TUNGSTEN SIZE

46. WELD LAYER	47. PROCESS	48. QUAL EXP DATE	49. AMPS	50. INTERPASS TEMP	51. WELDER SIGNATURE	52. DATE

53. INSPECTION DATA CONTAINED ON REVERSE OF THIS PAGE
REMARKS:

94. FINAL DISPOSITION: [ ] ACCEPT [ ] REJECT	95. NDT SUPERVISOR	DATE

THE PERSON DESIGNATED TO SIGN FOR AN ACTION VERIFIES, BASED ON PERSONAL OBSERVATION OR CERTIFIED RECORDS, AND CERTIFIES BY THEIR SIGNATURE THAT THE ACTION HAS BEEN PERFORMED IN ACCORDANCE WITH THE SPECIFIED REQUIREMENTS.

WELDING IN PROCESS CONTROL/NONDESTRUCTIVE TEST RECORD
QA FORM 20 (BACK)

NDT INSPECTION DATA

54. INSPECTION STANDARD	55. WELD CLASS	56. ACCEPTANCE STANDARD	57. ACCEPT CLASS

58. WELD PREP	59. INSP METHOD	60. ACCEPT/REJECT	61. NDT INSPECTOR SIGNATURE	62. DATE
COMPONENT A		[ ] ACCEPT [ ] REJECT		
COMPONENT B		[ ] ACCEPT [ ] REJECT		
63. JOINT FITUP		[ ] ACCEPT [ ] REJECT		

64. INSP LAYER	65. INSP METHOD	66. INSP PROC NO	67. ACCEPT/REJECT	68. NDT INSPECTOR SIGNATURE	69. DATE
			[ ] ACCEPT [ ] REJECT		
			[ ] ACCEPT [ ] REJECT		
			[ ] ACCEPT [ ] REJECT		
			[ ] ACCEPT [ ] REJECT		
			[ ] ACCEPT [ ] REJECT		

70. NDT INSPECTION DATA REPAIR NO._____ Defect: L W D

71. Repair Method: Excavation: L W D

72. INSP LAYER	73. INSP METHOD	74. INSP PROC NO.	75. ACCEPT/REJECT	76. NDT INSPECTOR SIGNATURE	77. DATE
			[ ] ACCEPT [ ] REJECT		
			[ ] ACCEPT [ ] REJECT		

78. NDT INSPECTION DATA REPAIR NO._____ Defect: L W D

79. Repair Method: Excavation: L W D

80. INSP LAYER	81. INSP METHOD	82. INSP PROC NO.	83. ACCEPT/REJECT	84. NDT INSPECTOR SIGNATURE	85. DATE
			[ ] ACCEPT [ ] REJECT		
			[ ] ACCEPT [ ] REJECT		

86. NDT INSPECTION DATA REPAIR NO._____ Defect: L W D

87. Repair Method: Excavation: L W D

88. INSP LAYER	89. INSP METHOD	90. INSP PROC NO.	91. ACCEPT/REJECT	92. NDT INSPECTOR SIGNATURE	93. DATE
			[ ] ACCEPT [ ] REJECT		
			[ ] ACCEPT [ ] REJECT		

53. REMARKS (Continued):

THE PERSON DESIGNATED TO SIGN FOR AN ACTION VERIFIES, BASED ON PERSONAL OBSERVATION OR CERTIFIED RECORDS, AND CERTIFIES BY THEIR SIGNATURE THAT THE ACTION HAS BEEN PERFORMED IN ACCORDANCE WITH THE SPECIFIED REQUIREMENTS.

WELDING IN PROCESS CONTROL/NONDESTRUCTIVE TEST RECORD
QA FORM 20 (FRONT)
When the form is used for production welding, the blocks marked with a ◆ must be completed by the planner.

◆1. PAGE 1 OF 2

◆2. SHIP USS BLUE RIDGE HULL NO. LCC19	◆3. JCN EM01-L261	◆4. CWP/REC SER. NO. N/A	◆5. LWC KTR	◆6. DATE 5 Apr 2025
◆7. SYSTEM Main Feedwater System	◆8. COMPONENT 1A Boiler Main Feedwater Discharge Gage Piping	◆9. DWG NO. Mapping Plan Enclosure-02	◆10. CWP STEP NO. 5.10.2.3	
◆11. JOINT ID PJ-2H	◆12. JOINT DESIGN P-14	13. INST LOCATION: [ ] STBD COMPT: [ ] C/L FR: [ ] PORT	14. WELDED LOCATION: [ ] SHOP [ ] FIELD	

BASE MATERIAL DATA

15. COMP DATA	16. MATERIAL	17. SIZE	18. THICKNESS	19. MATL SPEC	20. MIC NO.
COMPONENT A:					
COMPONENT B:					
21. [ ] SEAL RING [ ] BACK RING/STRIP	22. MATERIAL	23. SIZE	24. THICKNESS	25. MATL SPEC	26. MIC NO.

WELDING MATERIAL SPECIFICATIONS AND DATA

27. TYPE OF FILLER(S)	28. SIZE	29. MATL	30. MIL-SPEC	31. MIC NO.

WELD HISTORY

◆32. WELDING STANDARD: S9074-AR-GIB-010A/278	33. WELDING PROCEDURE:	34. DATA SHEET	35. POSITION: [ ] VERT [ ] HORZ [ ] FLAT [ ] OVHD [ ] FIXED [ ] ROLLED [ ] 45 DEG	
36. ACCESSIBILITY: [ ] 12"OR LESS [ ] UNRESTRICTED	37. PREHEAT TEMP	38. PREHEAT METHOD	39. POST HEAT. TEMP REQD: START TIME: STOP TIME:	
40. PURGE GAS:	41. FLOW RATE	42. SHIELD GAS	43. FLOW RATE	44. CUP SIZE / 45. TUNGSTEN SIZE

46. WELD LAYER	47. PROCESS	48. QUAL EXP DATE	49. AMPS	50. INTERPASS TEMP	51. WELDER SIGNATURE	52. DATE

53. INSPECTION DATA CONTAINED ON REVERSE OF THIS PAGE
REMARKS:

94. FINAL DISPOSITION: [ ] ACCEPT [ ] REJECT	95. NDT SUPERVISOR	DATE

THE PERSON DESIGNATED TO SIGN FOR AN ACTION VERIFIES, BASED ON PERSONAL OBSERVATION OR CERTIFIED RECORDS, AND CERTIFIES BY THEIR SIGNATURE THAT THE ACTION HAS BEEN PERFORMED IN ACCORDANCE WITH THE SPECIFIED REQUIREMENTS.

WELDING IN PROCESS CONTROL/NONDESTRUCTIVE TEST RECORD
QA FORM 20 (BACK)

NDT INSPECTION DATA

54. INSPECTION STANDARD	55. WELD CLASS	56. ACCEPTANCE STANDARD	57. ACCEPT CLASS

58. WELD PREP	59. INSP METHOD	60. ACCEPT/REJECT	61. NDT INSPECTOR SIGNATURE	62. DATE
COMPONENT A		[ ] ACCEPT [ ] REJECT		
COMPONENT B		[ ] ACCEPT [ ] REJECT		
63. JOINT FITUP		[ ] ACCEPT [ ] REJECT		

64. INSP LAYER	65. INSP METHOD	66. INSP PROC NO	67. ACCEPT/REJECT	68. NDT INSPECTOR SIGNATURE	69. DATE
			[ ] ACCEPT [ ] REJECT		
			[ ] ACCEPT [ ] REJECT		
			[ ] ACCEPT [ ] REJECT		
			[ ] ACCEPT [ ] REJECT		
			[ ] ACCEPT [ ] REJECT		

70. NDT INSPECTION DATA REPAIR NO._____ Defect: L W D

71. Repair Method: Excavation: L W D

72. INSP LAYER	73. INSP METHOD	74. INSP PROC NO.	75. ACCEPT/REJECT	76. NDT INSPECTOR SIGNATURE	77. DATE
			[ ] ACCEPT [ ] REJECT		
			[ ] ACCEPT [ ] REJECT		

78. NDT INSPECTION DATA REPAIR NO._____ Defect: L W D

79. Repair Method: Excavation: L W D

80. INSP LAYER	81. INSP METHOD	82. INSP PROC NO.	83. ACCEPT/REJECT	84. NDT INSPECTOR SIGNATURE	85. DATE
			[ ] ACCEPT [ ] REJECT		
			[ ] ACCEPT [ ] REJECT		

86. NDT INSPECTION DATA REPAIR NO._____ Defect: L W D

87. Repair Method: Excavation: L W D

88. INSP LAYER	89. INSP METHOD	90. INSP PROC NO.	91. ACCEPT/REJECT	92. NDT INSPECTOR SIGNATURE	93. DATE
			[ ] ACCEPT [ ] REJECT		
			[ ] ACCEPT [ ] REJECT		

53. REMARKS (Continued):

THE PERSON DESIGNATED TO SIGN FOR AN ACTION VERIFIES, BASED ON PERSONAL OBSERVATION OR CERTIFIED RECORDS, AND CERTIFIES BY THEIR SIGNATURE THAT THE ACTION HAS BEEN PERFORMED IN ACCORDANCE WITH THE SPECIFIED REQUIREMENTS.

WELDING IN PROCESS CONTROL/NONDESTRUCTIVE TEST RECORD
QA FORM 20 (FRONT)
When the form is used for production welding, the blocks marked with a ◆ must be completed by the planner.

◆1. PAGE 1 OF 2

◆2. SHIP USS BLUE RIDGE HULL NO. LCC19	◆3. JCN EM01-L261	◆4. CWP/REC SER. NO. N/A	◆5. LWC KTR	◆6. DATE 5 Apr 2025
◆7. SYSTEM Main Feedwater System	◆8. COMPONENT 1A Boiler Main Feedwater Discharge Gage Piping	◆9. DWG NO. Mapping Plan Enclosure-02	◆10. CWP STEP NO. 5.10.2.3	
◆11. JOINT ID PJ-3H	◆12. JOINT DESIGN P-17	13. INST LOCATION: [ ] STBD COMPT: [ ] C/L FR: [ ] PORT	14. WELDED LOCATION: [ ] SHOP [ ] FIELD	

BASE MATERIAL DATA

15. COMP DATA	16. MATERIAL	17. SIZE	18. THICKNESS	19. MATL SPEC	20. MIC NO.
COMPONENT A:					
COMPONENT B:					
21. [ ] SEAL RING [ ] BACK RING/STRIP	22. MATERIAL	23. SIZE	24. THICKNESS	25. MATL SPEC	26. MIC NO.

WELDING MATERIAL SPECIFICATIONS AND DATA

27. TYPE OF FILLER(S)	28. SIZE	29. MATL	30. MIL-SPEC	31. MIC NO.

WELD HISTORY

◆32. WELDING STANDARD: S9074-AR-GIB-010A/278	33. WELDING PROCEDURE:	34. DATA SHEET	35. POSITION: [ ] VERT [ ] HORZ [ ] FLAT [ ] OVHD [ ] FIXED [ ] ROLLED [ ] 45 DEG	
36. ACCESSIBILITY: [ ] 12"OR LESS [ ] UNRESTRICTED	37. PREHEAT TEMP	38. PREHEAT METHOD	39. POST HEAT. TEMP REQD: START TIME: STOP TIME:	
40. PURGE GAS:	41. FLOW RATE	42. SHIELD GAS	43. FLOW RATE	44. CUP SIZE / 45. TUNGSTEN SIZE

46. WELD LAYER	47. PROCESS	48. QUAL EXP DATE	49. AMPS	50. INTERPASS TEMP	51. WELDER SIGNATURE	52. DATE

53. INSPECTION DATA CONTAINED ON REVERSE OF THIS PAGE
REMARKS:

94. FINAL DISPOSITION: [ ] ACCEPT [ ] REJECT	95. NDT SUPERVISOR	DATE

THE PERSON DESIGNATED TO SIGN FOR AN ACTION VERIFIES, BASED ON PERSONAL OBSERVATION OR CERTIFIED RECORDS, AND CERTIFIES BY THEIR SIGNATURE THAT THE ACTION HAS BEEN PERFORMED IN ACCORDANCE WITH THE SPECIFIED REQUIREMENTS.

WELDING IN PROCESS CONTROL/NONDESTRUCTIVE TEST RECORD
QA FORM 20 (BACK)

NDT INSPECTION DATA

54. INSPECTION STANDARD	55. WELD CLASS	56. ACCEPTANCE STANDARD	57. ACCEPT CLASS

58. WELD PREP	59. INSP METHOD	60. ACCEPT/REJECT	61. NDT INSPECTOR SIGNATURE	62. DATE
COMPONENT A		[ ] ACCEPT [ ] REJECT		
COMPONENT B		[ ] ACCEPT [ ] REJECT		
63. JOINT FITUP		[ ] ACCEPT [ ] REJECT		

64. INSP LAYER	65. INSP METHOD	66. INSP PROC NO	67. ACCEPT/REJECT	68. NDT INSPECTOR SIGNATURE	69. DATE
			[ ] ACCEPT [ ] REJECT		
			[ ] ACCEPT [ ] REJECT		
			[ ] ACCEPT [ ] REJECT		
			[ ] ACCEPT [ ] REJECT		
			[ ] ACCEPT [ ] REJECT		

70. NDT INSPECTION DATA REPAIR NO._____ Defect: L W D

71. Repair Method: Excavation: L W D

72. INSP LAYER	73. INSP METHOD	74. INSP PROC NO.	75. ACCEPT/REJECT	76. NDT INSPECTOR SIGNATURE	77. DATE
			[ ] ACCEPT [ ] REJECT		
			[ ] ACCEPT [ ] REJECT		

78. NDT INSPECTION DATA REPAIR NO._____ Defect: L W D

79. Repair Method: Excavation: L W D

80. INSP LAYER	81. INSP METHOD	82. INSP PROC NO.	83. ACCEPT/REJECT	84. NDT INSPECTOR SIGNATURE	85. DATE
			[ ] ACCEPT [ ] REJECT		
			[ ] ACCEPT [ ] REJECT		

86. NDT INSPECTION DATA REPAIR NO._____ Defect: L W D

87. Repair Method: Excavation: L W D

88. INSP LAYER	89. INSP METHOD	90. INSP PROC NO.	91. ACCEPT/REJECT	92. NDT INSPECTOR SIGNATURE	93. DATE
			[ ] ACCEPT [ ] REJECT		
			[ ] ACCEPT [ ] REJECT		

53. REMARKS (Continued):

THE PERSON DESIGNATED TO SIGN FOR AN ACTION VERIFIES, BASED ON PERSONAL OBSERVATION OR CERTIFIED RECORDS, AND CERTIFIES BY THEIR SIGNATURE THAT THE ACTION HAS BEEN PERFORMED IN ACCORDANCE WITH THE SPECIFIED REQUIREMENTS.

WELDING IN PROCESS CONTROL/NONDESTRUCTIVE TEST RECORD
QA FORM 20 (FRONT)
When the form is used for production welding, the blocks marked with a ◆ must be completed by the planner.

◆1. PAGE 1 OF 2

◆2. SHIP USS BLUE RIDGE HULL NO. LCC19	◆3. JCN EM01-L261	◆4. CWP/REC SER. NO. N/A	◆5. LWC KTR	◆6. DATE 5 Apr 2025
◆7. SYSTEM Main Feedwater System	◆8. COMPONENT 1A Boiler Main Feedwater Discharge Gage Piping	◆9. DWG NO. Mapping Plan Enclosure-02	◆10. CWP STEP NO. 5.10.2.3	
◆11. JOINT ID PJ-4H	◆12. JOINT DESIGN P-17	13. INST LOCATION: [ ] STBD COMPT: [ ] C/L FR: [ ] PORT	14. WELDED LOCATION: [ ] SHOP [ ] FIELD	

BASE MATERIAL DATA

15. COMP DATA	16. MATERIAL	17. SIZE	18. THICKNESS	19. MATL SPEC	20. MIC NO.
COMPONENT A:					
COMPONENT B:					
21. [ ] SEAL RING [ ] BACK RING/STRIP	22. MATERIAL	23. SIZE	24. THICKNESS	25. MATL SPEC	26. MIC NO.

WELDING MATERIAL SPECIFICATIONS AND DATA

27. TYPE OF FILLER(S)	28. SIZE	29. MATL	30. MIL-SPEC	31. MIC NO.

WELD HISTORY

◆32. WELDING STANDARD: S9074-AR-GIB-010A/278	33. WELDING PROCEDURE:	34. DATA SHEET	35. POSITION: [ ] VERT [ ] HORZ [ ] FLAT [ ] OVHD [ ] FIXED [ ] ROLLED [ ] 45 DEG	
36. ACCESSIBILITY: [ ] 12"OR LESS [ ] UNRESTRICTED	37. PREHEAT TEMP	38. PREHEAT METHOD	39. POST HEAT. TEMP REQD: START TIME: STOP TIME:	
40. PURGE GAS:	41. FLOW RATE	42. SHIELD GAS	43. FLOW RATE	44. CUP SIZE / 45. TUNGSTEN SIZE

46. WELD LAYER	47. PROCESS	48. QUAL EXP DATE	49. AMPS	50. INTERPASS TEMP	51. WELDER SIGNATURE	52. DATE

53. INSPECTION DATA CONTAINED ON REVERSE OF THIS PAGE
REMARKS:

94. FINAL DISPOSITION: [ ] ACCEPT [ ] REJECT	95. NDT SUPERVISOR	DATE

THE PERSON DESIGNATED TO SIGN FOR AN ACTION VERIFIES, BASED ON PERSONAL OBSERVATION OR CERTIFIED RECORDS, AND CERTIFIES BY THEIR SIGNATURE THAT THE ACTION HAS BEEN PERFORMED IN ACCORDANCE WITH THE SPECIFIED REQUIREMENTS.

WELDING IN PROCESS CONTROL/NONDESTRUCTIVE TEST RECORD
QA FORM 20 (BACK)

NDT INSPECTION DATA

54. INSPECTION STANDARD	55. WELD CLASS	56. ACCEPTANCE STANDARD	57. ACCEPT CLASS

58. WELD PREP	59. INSP METHOD	60. ACCEPT/REJECT	61. NDT INSPECTOR SIGNATURE	62. DATE
COMPONENT A		[ ] ACCEPT [ ] REJECT		
COMPONENT B		[ ] ACCEPT [ ] REJECT		
63. JOINT FITUP		[ ] ACCEPT [ ] REJECT		

64. INSP LAYER	65. INSP METHOD	66. INSP PROC NO	67. ACCEPT/REJECT	68. NDT INSPECTOR SIGNATURE	69. DATE
			[ ] ACCEPT [ ] REJECT		
			[ ] ACCEPT [ ] REJECT		
			[ ] ACCEPT [ ] REJECT		
			[ ] ACCEPT [ ] REJECT		
			[ ] ACCEPT [ ] REJECT		

70. NDT INSPECTION DATA REPAIR NO._____ Defect: L W D

71. Repair Method: Excavation: L W D

72. INSP LAYER	73. INSP METHOD	74. INSP PROC NO.	75. ACCEPT/REJECT	76. NDT INSPECTOR SIGNATURE	77. DATE
			[ ] ACCEPT [ ] REJECT		
			[ ] ACCEPT [ ] REJECT		

78. NDT INSPECTION DATA REPAIR NO._____ Defect: L W D

79. Repair Method: Excavation: L W D

80. INSP LAYER	81. INSP METHOD	82. INSP PROC NO.	83. ACCEPT/REJECT	84. NDT INSPECTOR SIGNATURE	85. DATE
			[ ] ACCEPT [ ] REJECT		
			[ ] ACCEPT [ ] REJECT		

86. NDT INSPECTION DATA REPAIR NO._____ Defect: L W D

87. Repair Method: Excavation: L W D

88. INSP LAYER	89. INSP METHOD	90. INSP PROC NO.	91. ACCEPT/REJECT	92. NDT INSPECTOR SIGNATURE	93. DATE
			[ ] ACCEPT [ ] REJECT		
			[ ] ACCEPT [ ] REJECT		

53. REMARKS (Continued):

THE PERSON DESIGNATED TO SIGN FOR AN ACTION VERIFIES, BASED ON PERSONAL OBSERVATION OR CERTIFIED RECORDS, AND CERTIFIES BY THEIR SIGNATURE THAT THE ACTION HAS BEEN PERFORMED IN ACCORDANCE WITH THE SPECIFIED REQUIREMENTS.

WELDING IN PROCESS CONTROL/NONDESTRUCTIVE TEST RECORD
QA FORM 20 (FRONT)
When the form is used for production welding, the blocks marked with a ◆ must be completed by the planner.

◆1. PAGE 1 OF 2

◆2. SHIP USS BLUE RIDGE HULL NO. LCC19	◆3. JCN EM01-L261	◆4. CWP/REC SER. NO. N/A	◆5. LWC KTR	◆6. DATE 5 Apr 2025
◆7. SYSTEM Main Feedwater System	◆8. COMPONENT 1A Boiler Main Feedwater Discharge Gage Piping	◆9. DWG NO. Mapping Plan Enclosure-02	◆10. CWP STEP NO. 5.10.2.3	
◆11. JOINT ID PJ-5H	◆12. JOINT DESIGN P-14	13. INST LOCATION: [ ] STBD COMPT: [ ] C/L FR: [ ] PORT	14. WELDED LOCATION: [ ] SHOP [ ] FIELD	

BASE MATERIAL DATA

15. COMP DATA	16. MATERIAL	17. SIZE	18. THICKNESS	19. MATL SPEC	20. MIC NO.
COMPONENT A:					
COMPONENT B:					
21. [ ] SEAL RING [ ] BACK RING/STRIP	22. MATERIAL	23. SIZE	24. THICKNESS	25. MATL SPEC	26. MIC NO.

WELDING MATERIAL SPECIFICATIONS AND DATA

27. TYPE OF FILLER(S)	28. SIZE	29. MATL	30. MIL-SPEC	31. MIC NO.

WELD HISTORY

◆32. WELDING STANDARD: S9074-AR-GIB-010A/278	33. WELDING PROCEDURE:	34. DATA SHEET	35. POSITION: [ ] VERT [ ] HORZ [ ] FLAT [ ] OVHD [ ] FIXED [ ] ROLLED [ ] 45 DEG	
36. ACCESSIBILITY: [ ] 12"OR LESS [ ] UNRESTRICTED	37. PREHEAT TEMP	38. PREHEAT METHOD	39. POST HEAT. TEMP REQD: START TIME: STOP TIME:	
40. PURGE GAS:	41. FLOW RATE	42. SHIELD GAS	43. FLOW RATE	44. CUP SIZE / 45. TUNGSTEN SIZE

46. WELD LAYER	47. PROCESS	48. QUAL EXP DATE	49. AMPS	50. INTERPASS TEMP	51. WELDER SIGNATURE	52. DATE

53. INSPECTION DATA CONTAINED ON REVERSE OF THIS PAGE
REMARKS:

94. FINAL DISPOSITION: [ ] ACCEPT [ ] REJECT	95. NDT SUPERVISOR	DATE

THE PERSON DESIGNATED TO SIGN FOR AN ACTION VERIFIES, BASED ON PERSONAL OBSERVATION OR CERTIFIED RECORDS, AND CERTIFIES BY THEIR SIGNATURE THAT THE ACTION HAS BEEN PERFORMED IN ACCORDANCE WITH THE SPECIFIED REQUIREMENTS.

WELDING IN PROCESS CONTROL/NONDESTRUCTIVE TEST RECORD
QA FORM 20 (BACK)

NDT INSPECTION DATA

54. INSPECTION STANDARD	55. WELD CLASS	56. ACCEPTANCE STANDARD	57. ACCEPT CLASS

58. WELD PREP	59. INSP METHOD	60. ACCEPT/REJECT	61. NDT INSPECTOR SIGNATURE	62. DATE
COMPONENT A		[ ] ACCEPT [ ] REJECT		
COMPONENT B		[ ] ACCEPT [ ] REJECT		
63. JOINT FITUP		[ ] ACCEPT [ ] REJECT		

64. INSP LAYER	65. INSP METHOD	66. INSP PROC NO	67. ACCEPT/REJECT	68. NDT INSPECTOR SIGNATURE	69. DATE
			[ ] ACCEPT [ ] REJECT		
			[ ] ACCEPT [ ] REJECT		
			[ ] ACCEPT [ ] REJECT		
			[ ] ACCEPT [ ] REJECT		
			[ ] ACCEPT [ ] REJECT		

70. NDT INSPECTION DATA REPAIR NO._____ Defect: L W D

71. Repair Method: Excavation: L W D

72. INSP LAYER	73. INSP METHOD	74. INSP PROC NO.	75. ACCEPT/REJECT	76. NDT INSPECTOR SIGNATURE	77. DATE
			[ ] ACCEPT [ ] REJECT		
			[ ] ACCEPT [ ] REJECT		

78. NDT INSPECTION DATA REPAIR NO._____ Defect: L W D

79. Repair Method: Excavation: L W D

80. INSP LAYER	81. INSP METHOD	82. INSP PROC NO.	83. ACCEPT/REJECT	84. NDT INSPECTOR SIGNATURE	85. DATE
			[ ] ACCEPT [ ] REJECT		
			[ ] ACCEPT [ ] REJECT		

86. NDT INSPECTION DATA REPAIR NO._____ Defect: L W D

87. Repair Method: Excavation: L W D

88. INSP LAYER	89. INSP METHOD	90. INSP PROC NO.	91. ACCEPT/REJECT	92. NDT INSPECTOR SIGNATURE	93. DATE
			[ ] ACCEPT [ ] REJECT		
			[ ] ACCEPT [ ] REJECT		

53. REMARKS (Continued):

THE PERSON DESIGNATED TO SIGN FOR AN ACTION VERIFIES, BASED ON PERSONAL OBSERVATION OR CERTIFIED RECORDS, AND CERTIFIES BY THEIR SIGNATURE THAT THE ACTION HAS BEEN PERFORMED IN ACCORDANCE WITH THE SPECIFIED REQUIREMENTS.

WELDING IN PROCESS CONTROL/NONDESTRUCTIVE TEST RECORD
QA FORM 20 (FRONT)
When the form is used for production welding, the blocks marked with a ◆ must be completed by the planner.

◆1. PAGE 1 OF 2

◆2. SHIP USS BLUE RIDGE HULL NO. LCC19	◆3. JCN EM01-L261	◆4. CWP/REC SER. NO. N/A	◆5. LWC KTR	◆6. DATE 5 Apr 2025
◆7. SYSTEM Main Feedwater System	◆8. COMPONENT 1A Boiler Main Feedwater Discharge Gage Piping	◆9. DWG NO. Mapping Plan Enclosure-02	◆10. CWP STEP NO. 5.10.2.3	
◆11. JOINT ID PJ-6H	◆12. JOINT DESIGN P-14	13. INST LOCATION: [ ] STBD COMPT: [ ] C/L FR: [ ] PORT	14. WELDED LOCATION: [ ] SHOP [ ] FIELD	

BASE MATERIAL DATA

15. COMP DATA	16. MATERIAL	17. SIZE	18. THICKNESS	19. MATL SPEC	20. MIC NO.
COMPONENT A:					
COMPONENT B:					
21. [ ] SEAL RING [ ] BACK RING/STRIP	22. MATERIAL	23. SIZE	24. THICKNESS	25. MATL SPEC	26. MIC NO.

WELDING MATERIAL SPECIFICATIONS AND DATA

27. TYPE OF FILLER(S)	28. SIZE	29. MATL	30. MIL-SPEC	31. MIC NO.

WELD HISTORY

◆32. WELDING STANDARD: S9074-AR-GIB-010A/278	33. WELDING PROCEDURE:	34. DATA SHEET	35. POSITION: [ ] VERT [ ] FLAT [ ] FIXED [ ] 45 DEG [ ] HORZ [ ] OVHD [ ] ROLLED	
36. ACCESSIBILITY: [ ] 12"OR LESS [ ] UNRESTRICTED	37. PREHEAT TEMP	38. PREHEAT METHOD	39. POST HEAT. TEMP REQD: START TIME: STOP TIME:	

40. PURGE GAS:	41. FLOW RATE	42. SHIELD GAS	43. FLOW RATE	44. CUP SIZE	45. TUNGSTEN SIZE

46. WELD LAYER	47. PROCESS	48. QUAL EXP DATE	49. AMPS	50. INTERPASS TEMP	51. WELDER SIGNATURE	52. DATE

53. INSPECTION DATA CONTAINED ON REVERSE OF THIS PAGE
REMARKS:

94. FINAL DISPOSITION: [ ] ACCEPT [ ] REJECT	95. NDT SUPERVISOR	DATE

THE PERSON DESIGNATED TO SIGN FOR AN ACTION VERIFIES, BASED ON PERSONAL OBSERVATION OR CERTIFIED RECORDS, AND CERTIFIES BY THEIR SIGNATURE THAT THE ACTION HAS BEEN PERFORMED IN ACCORDANCE WITH THE SPECIFIED REQUIREMENTS.

WELDING IN PROCESS CONTROL/NONDESTRUCTIVE TEST RECORD
QA FORM 20 (BACK)

NDT INSPECTION DATA

54. INSPECTION STANDARD	55. WELD CLASS	56. ACCEPTANCE STANDARD	57. ACCEPT CLASS

58. WELD PREP	59. INSP METHOD	60. ACCEPT/REJECT	61. NDT INSPECTOR SIGNATURE	62. DATE
COMPONENT A		[ ] ACCEPT [ ] REJECT		
COMPONENT B		[ ] ACCEPT [ ] REJECT		
63. JOINT FITUP		[ ] ACCEPT [ ] REJECT		

64. INSP LAYER	65. INSP METHOD	66. INSP PROC NO	67. ACCEPT/REJECT	68. NDT INSPECTOR SIGNATURE	69. DATE
			[ ] ACCEPT [ ] REJECT		
			[ ] ACCEPT [ ] REJECT		
			[ ] ACCEPT [ ] REJECT		
			[ ] ACCEPT [ ] REJECT		
			[ ] ACCEPT [ ] REJECT		

70. NDT INSPECTION DATA REPAIR NO._____ Defect: L W D

71. Repair Method: Excavation: L W D

72. INSP LAYER	73. INSP METHOD	74. INSP PROC NO.	75. ACCEPT/REJECT	76. NDT INSPECTOR SIGNATURE	77. DATE
			[ ] ACCEPT [ ] REJECT		
			[ ] ACCEPT [ ] REJECT		

78. NDT INSPECTION DATA REPAIR NO._____ Defect: L W D

79. Repair Method: Excavation: L W D

80. INSP LAYER	81. INSP METHOD	82. INSP PROC NO.	83. ACCEPT/REJECT	84. NDT INSPECTOR SIGNATURE	85. DATE
			[ ] ACCEPT [ ] REJECT		
			[ ] ACCEPT [ ] REJECT		

86. NDT INSPECTION DATA REPAIR NO._____ Defect: L W D

87. Repair Method: Excavation: L W D

88. INSP LAYER	89. INSP METHOD	90. INSP PROC NO.	91. ACCEPT/REJECT	92. NDT INSPECTOR SIGNATURE	93. DATE
			[ ] ACCEPT [ ] REJECT		
			[ ] ACCEPT [ ] REJECT		

53. REMARKS (Continued):

THE PERSON DESIGNATED TO SIGN FOR AN ACTION VERIFIES, BASED ON PERSONAL OBSERVATION OR CERTIFIED RECORDS, AND CERTIFIES BY THEIR SIGNATURE THAT THE ACTION HAS BEEN PERFORMED IN ACCORDANCE WITH THE SPECIFIED REQUIREMENTS.

WELDING IN PROCESS CONTROL/NONDESTRUCTIVE TEST RECORD
QA FORM 20 (FRONT)
When the form is used for production welding, the blocks marked with a ◆ must be completed by the planner.

◆1. PAGE 1 OF 2

◆2. SHIP USS BLUE RIDGE HULL NO. LCC19	◆3. JCN EM01-L261	◆4. CWP/REC SER. NO. N/A	◆5. LWC KTR	◆6. DATE 5 Apr 2025
◆7. SYSTEM Main Feedwater System	◆8. COMPONENT 1B Boiler Main Feedwater Discharge Gage Piping	◆9. DWG NO. Mapping Plan Enclosure-02	◆10. CWP STEP NO. 5.10.2.3	
◆11. JOINT ID PJ-1J	◆12. JOINT DESIGN P-14	13. INST LOCATION: [ ] STBD COMPT: [ ] C/L FR: [ ] PORT	14. WELDED LOCATION: [ ] SHOP [ ] FIELD	

BASE MATERIAL DATA

15. COMP DATA	16. MATERIAL	17. SIZE	18. THICKNESS	19. MATL SPEC	20. MIC NO.
COMPONENT A:					
COMPONENT B:					
21. [ ] SEAL RING [ ] BACK RING/STRIP	22. MATERIAL	23. SIZE	24. THICKNESS	25. MATL SPEC	26. MIC NO.

WELDING MATERIAL SPECIFICATIONS AND DATA

27. TYPE OF FILLER(S)	28. SIZE	29. MATL	30. MIL-SPEC	31. MIC NO.

WELD HISTORY

◆32. WELDING STANDARD: S9074-AR-GIB-010A/278	33. WELDING PROCEDURE:	34. DATA SHEET	35. POSITION: [ ] VERT [ ] HORZ [ ] FLAT [ ] OVHD [ ] FIXED [ ] ROLLED [ ] 45 DEG	
36. ACCESSIBILITY: [ ] 12"OR LESS [ ] UNRESTRICTED	37. PREHEAT TEMP	38. PREHEAT METHOD	39. POST HEAT. TEMP REQD: START TIME: STOP TIME:	
40. PURGE GAS:	41. FLOW RATE	42. SHIELD GAS	43. FLOW RATE	44. CUP SIZE / 45. TUNGSTEN SIZE

46. WELD LAYER	47. PROCESS	48. QUAL EXP DATE	49. AMPS	50. INTERPASS TEMP	51. WELDER SIGNATURE	52. DATE

53. INSPECTION DATA CONTAINED ON REVERSE OF THIS PAGE
REMARKS:

94. FINAL DISPOSITION: [ ] ACCEPT [ ] REJECT	95. NDT SUPERVISOR	DATE

THE PERSON DESIGNATED TO SIGN FOR AN ACTION VERIFIES, BASED ON PERSONAL OBSERVATION OR CERTIFIED RECORDS, AND CERTIFIES BY THEIR SIGNATURE THAT THE ACTION HAS BEEN PERFORMED IN ACCORDANCE WITH THE SPECIFIED REQUIREMENTS.

WELDING IN PROCESS CONTROL/NONDESTRUCTIVE TEST RECORD
QA FORM 20 (BACK)

NDT INSPECTION DATA

54. INSPECTION STANDARD	55. WELD CLASS	56. ACCEPTANCE STANDARD	57. ACCEPT CLASS

58. WELD PREP	59. INSP METHOD	60. ACCEPT/REJECT	61. NDT INSPECTOR SIGNATURE	62. DATE
COMPONENT A		[ ] ACCEPT [ ] REJECT		
COMPONENT B		[ ] ACCEPT [ ] REJECT		
63. JOINT FITUP		[ ] ACCEPT [ ] REJECT		

64. INSP LAYER	65. INSP METHOD	66. INSP PROC NO	67. ACCEPT/REJECT	68. NDT INSPECTOR SIGNATURE	69. DATE
			[ ] ACCEPT [ ] REJECT		
			[ ] ACCEPT [ ] REJECT		
			[ ] ACCEPT [ ] REJECT		
			[ ] ACCEPT [ ] REJECT		
			[ ] ACCEPT [ ] REJECT		

70. NDT INSPECTION DATA REPAIR NO._____ Defect: L W D

71. Repair Method: Excavation: L W D

72. INSP LAYER	73. INSP METHOD	74. INSP PROC NO.	75. ACCEPT/REJECT	76. NDT INSPECTOR SIGNATURE	77. DATE
			[ ] ACCEPT [ ] REJECT		
			[ ] ACCEPT [ ] REJECT		

78. NDT INSPECTION DATA REPAIR NO._____ Defect: L W D

79. Repair Method: Excavation: L W D

80. INSP LAYER	81. INSP METHOD	82. INSP PROC NO.	83. ACCEPT/REJECT	84. NDT INSPECTOR SIGNATURE	85. DATE
			[ ] ACCEPT [ ] REJECT		
			[ ] ACCEPT [ ] REJECT		

86. NDT INSPECTION DATA REPAIR NO._____ Defect: L W D

87. Repair Method: Excavation: L W D

88. INSP LAYER	89. INSP METHOD	90. INSP PROC NO.	91. ACCEPT/REJECT	92. NDT INSPECTOR SIGNATURE	93. DATE
			[ ] ACCEPT [ ] REJECT		
			[ ] ACCEPT [ ] REJECT		

53. REMARKS (Continued):

THE PERSON DESIGNATED TO SIGN FOR AN ACTION VERIFIES, BASED ON PERSONAL OBSERVATION OR CERTIFIED RECORDS, AND CERTIFIES BY THEIR SIGNATURE THAT THE ACTION HAS BEEN PERFORMED IN ACCORDANCE WITH THE SPECIFIED REQUIREMENTS.

WELDING IN PROCESS CONTROL/NONDESTRUCTIVE TEST RECORD
QA FORM 20 (FRONT)
When the form is used for production welding, the blocks marked with a ◆ must be completed by the planner.

◆1. PAGE 1 OF 2

◆2. SHIP USS BLUE RIDGE HULL NO. LCC19	◆3. JCN EM01-L261	◆4. CWP/REC SER. NO. N/A	◆5. LWC KTR	◆6. DATE 5 Apr 2025
◆7. SYSTEM Main Feedwater System	◆8. COMPONENT 1B Boiler Main Feedwater Discharge Gage Piping	◆9. DWG NO. Mapping Plan Enclosure-02	◆10. CWP STEP NO. 5.10.2.3	
◆11. JOINT ID PJ-2J	◆12. JOINT DESIGN P-14	13. INST LOCATION: [ ] STBD COMPT: [ ] C/L FR: [ ] PORT	14. WELDED LOCATION: [ ] SHOP [ ] FIELD	

BASE MATERIAL DATA

15. COMP DATA	16. MATERIAL	17. SIZE	18. THICKNESS	19. MATL SPEC	20. MIC NO.
COMPONENT A:					
COMPONENT B:					
21. [ ] SEAL RING [ ] BACK RING/STRIP	22. MATERIAL	23. SIZE	24. THICKNESS	25. MATL SPEC	26. MIC NO.

WELDING MATERIAL SPECIFICATIONS AND DATA

27. TYPE OF FILLER(S)	28. SIZE	29. MATL	30. MIL-SPEC	31. MIC NO.

WELD HISTORY

◆32. WELDING STANDARD: S9074-AR-GIB-010A/278	33. WELDING PROCEDURE:	34. DATA SHEET	35. POSITION: [ ] VERT [ ] HORZ [ ] FLAT [ ] OVHD [ ] FIXED [ ] ROLLED [ ] 45 DEG	
36. ACCESSIBILITY: [ ] 12"OR LESS [ ] UNRESTRICTED	37. PREHEAT TEMP	38. PREHEAT METHOD	39. POST HEAT. TEMP REQD: START TIME: STOP TIME:	
40. PURGE GAS:	41. FLOW RATE	42. SHIELD GAS	43. FLOW RATE	44. CUP SIZE / 45. TUNGSTEN SIZE

46. WELD LAYER	47. PROCESS	48. QUAL EXP DATE	49. AMPS	50. INTERPASS TEMP	51. WELDER SIGNATURE	52. DATE

53. INSPECTION DATA CONTAINED ON REVERSE OF THIS PAGE
REMARKS:

94. FINAL DISPOSITION: [ ] ACCEPT [ ] REJECT	95. NDT SUPERVISOR	DATE

THE PERSON DESIGNATED TO SIGN FOR AN ACTION VERIFIES, BASED ON PERSONAL OBSERVATION OR CERTIFIED RECORDS, AND CERTIFIES BY THEIR SIGNATURE THAT THE ACTION HAS BEEN PERFORMED IN ACCORDANCE WITH THE SPECIFIED REQUIREMENTS.

WELDING IN PROCESS CONTROL/NONDESTRUCTIVE TEST RECORD
QA FORM 20 (BACK)

NDT INSPECTION DATA

54. INSPECTION STANDARD	55. WELD CLASS	56. ACCEPTANCE STANDARD	57. ACCEPT CLASS

58. WELD PREP	59. INSP METHOD	60. ACCEPT/REJECT	61. NDT INSPECTOR SIGNATURE	62. DATE
COMPONENT A		[ ] ACCEPT [ ] REJECT		
COMPONENT B		[ ] ACCEPT [ ] REJECT		
63. JOINT FITUP		[ ] ACCEPT [ ] REJECT		

64. INSP LAYER	65. INSP METHOD	66. INSP PROC NO	67. ACCEPT/REJECT	68. NDT INSPECTOR SIGNATURE	69. DATE
			[ ] ACCEPT [ ] REJECT		
			[ ] ACCEPT [ ] REJECT		
			[ ] ACCEPT [ ] REJECT		
			[ ] ACCEPT [ ] REJECT		
			[ ] ACCEPT [ ] REJECT		

70. NDT INSPECTION DATA REPAIR NO._____ Defect: L W D

71. Repair Method: Excavation: L W D

72. INSP LAYER	73. INSP METHOD	74. INSP PROC NO.	75. ACCEPT/REJECT	76. NDT INSPECTOR SIGNATURE	77. DATE
			[ ] ACCEPT [ ] REJECT		
			[ ] ACCEPT [ ] REJECT		

78. NDT INSPECTION DATA REPAIR NO._____ Defect: L W D

79. Repair Method: Excavation: L W D

80. INSP LAYER	81. INSP METHOD	82. INSP PROC NO.	83. ACCEPT/REJECT	84. NDT INSPECTOR SIGNATURE	85. DATE
			[ ] ACCEPT [ ] REJECT		
			[ ] ACCEPT [ ] REJECT		

86. NDT INSPECTION DATA REPAIR NO._____ Defect: L W D

87. Repair Method: Excavation: L W D

88. INSP LAYER	89. INSP METHOD	90. INSP PROC NO.	91. ACCEPT/REJECT	92. NDT INSPECTOR SIGNATURE	93. DATE
			[ ] ACCEPT [ ] REJECT		
			[ ] ACCEPT [ ] REJECT		

53. REMARKS (Continued):

THE PERSON DESIGNATED TO SIGN FOR AN ACTION VERIFIES, BASED ON PERSONAL OBSERVATION OR CERTIFIED RECORDS, AND CERTIFIES BY THEIR SIGNATURE THAT THE ACTION HAS BEEN PERFORMED IN ACCORDANCE WITH THE SPECIFIED REQUIREMENTS.

WELDING IN PROCESS CONTROL/NONDESTRUCTIVE TEST RECORD
QA FORM 20 (FRONT)
When the form is used for production welding, the blocks marked with a ◆ must be completed by the planner.

◆1. PAGE 1 OF 2

◆2. SHIP USS BLUE RIDGE HULL NO. LCC19	◆3. JCN EM01-L261	◆4. CWP/REC SER. NO. N/A	◆5. LWC KTR	◆6. DATE 5 Apr 2025
◆7. SYSTEM Main Feedwater System	◆8. COMPONENT 1B Boiler Main Feedwater Discharge Gage Piping	◆9. DWG NO. Mapping Plan Enclosure-02	◆10. CWP STEP NO. 5.10.2.3	
◆11. JOINT ID PJ-3J	◆12. JOINT DESIGN P-17	13. INST LOCATION: [ ] STBD COMPT: [ ] C/L FR: [ ] PORT	14. WELDED LOCATION: [ ] SHOP [ ] FIELD	

BASE MATERIAL DATA

15. COMP DATA	16. MATERIAL	17. SIZE	18. THICKNESS	19. MATL SPEC	20. MIC NO.
COMPONENT A:					
COMPONENT B:					
21. [ ] SEAL RING [ ] BACK RING/STRIP	22. MATERIAL	23. SIZE	24. THICKNESS	25. MATL SPEC	26. MIC NO.

WELDING MATERIAL SPECIFICATIONS AND DATA

27. TYPE OF FILLER(S)	28. SIZE	29. MATL	30. MIL-SPEC	31. MIC NO.

WELD HISTORY

◆32. WELDING STANDARD: S9074-AR-GIB-010A/278	33. WELDING PROCEDURE:	34. DATA SHEET	35. POSITION: [ ] VERT [ ] HORZ [ ] FLAT [ ] OVHD [ ] FIXED [ ] ROLLED [ ] 45 DEG	
36. ACCESSIBILITY: [ ] 12"OR LESS [ ] UNRESTRICTED	37. PREHEAT TEMP	38. PREHEAT METHOD	39. POST HEAT. TEMP REQD: START TIME: STOP TIME:	
40. PURGE GAS:	41. FLOW RATE	42. SHIELD GAS	43. FLOW RATE	44. CUP SIZE / 45. TUNGSTEN SIZE

46. WELD LAYER	47. PROCESS	48. QUAL EXP DATE	49. AMPS	50. INTERPASS TEMP	51. WELDER SIGNATURE	52. DATE

53. INSPECTION DATA CONTAINED ON REVERSE OF THIS PAGE
REMARKS:

94. FINAL DISPOSITION: [ ] ACCEPT [ ] REJECT	95. NDT SUPERVISOR	DATE

THE PERSON DESIGNATED TO SIGN FOR AN ACTION VERIFIES, BASED ON PERSONAL OBSERVATION OR CERTIFIED RECORDS, AND CERTIFIES BY THEIR SIGNATURE THAT THE ACTION HAS BEEN PERFORMED IN ACCORDANCE WITH THE SPECIFIED REQUIREMENTS.

WELDING IN PROCESS CONTROL/NONDESTRUCTIVE TEST RECORD
QA FORM 20 (BACK)

NDT INSPECTION DATA

54. INSPECTION STANDARD	55. WELD CLASS	56. ACCEPTANCE STANDARD	57. ACCEPT CLASS

58. WELD PREP	59. INSP METHOD	60. ACCEPT/REJECT	61. NDT INSPECTOR SIGNATURE	62. DATE
COMPONENT A		[ ] ACCEPT [ ] REJECT		
COMPONENT B		[ ] ACCEPT [ ] REJECT		
63. JOINT FITUP		[ ] ACCEPT [ ] REJECT		

64. INSP LAYER	65. INSP METHOD	66. INSP PROC NO	67. ACCEPT/REJECT	68. NDT INSPECTOR SIGNATURE	69. DATE
			[ ] ACCEPT [ ] REJECT		
			[ ] ACCEPT [ ] REJECT		
			[ ] ACCEPT [ ] REJECT		
			[ ] ACCEPT [ ] REJECT		
			[ ] ACCEPT [ ] REJECT		

70. NDT INSPECTION DATA REPAIR NO._____ Defect: L W D

71. Repair Method: Excavation: L W D

72. INSP LAYER	73. INSP METHOD	74. INSP PROC NO.	75. ACCEPT/REJECT	76. NDT INSPECTOR SIGNATURE	77. DATE
			[ ] ACCEPT [ ] REJECT		
			[ ] ACCEPT [ ] REJECT		

78. NDT INSPECTION DATA REPAIR NO._____ Defect: L W D

79. Repair Method: Excavation: L W D

80. INSP LAYER	81. INSP METHOD	82. INSP PROC NO.	83. ACCEPT/REJECT	84. NDT INSPECTOR SIGNATURE	85. DATE
			[ ] ACCEPT [ ] REJECT		
			[ ] ACCEPT [ ] REJECT		

86. NDT INSPECTION DATA REPAIR NO._____ Defect: L W D

87. Repair Method: Excavation: L W D

88. INSP LAYER	89. INSP METHOD	90. INSP PROC NO.	91. ACCEPT/REJECT	92. NDT INSPECTOR SIGNATURE	93. DATE
			[ ] ACCEPT [ ] REJECT		
			[ ] ACCEPT [ ] REJECT		

53. REMARKS (Continued):

THE PERSON DESIGNATED TO SIGN FOR AN ACTION VERIFIES, BASED ON PERSONAL OBSERVATION OR CERTIFIED RECORDS, AND CERTIFIES BY THEIR SIGNATURE THAT THE ACTION HAS BEEN PERFORMED IN ACCORDANCE WITH THE SPECIFIED REQUIREMENTS.

WELDING IN PROCESS CONTROL/NONDESTRUCTIVE TEST RECORD
QA FORM 20 (FRONT)
When the form is used for production welding, the blocks marked with a ◆ must be completed by the planner.

◆1. PAGE 1 OF 2

◆2. SHIP USS BLUE RIDGE HULL NO. LCC19	◆3. JCN EM01-L261	◆4. CWP/REC SER. NO. N/A	◆5. LWC KTR	◆6. DATE 5 Apr 2025
◆7. SYSTEM Main Feedwater System	◆8. COMPONENT 1B Boiler Main Feedwater Discharge Gage Piping	◆9. DWG NO. Mapping Plan Enclosure-02	◆10. CWP STEP NO. 5.10.2.3	
◆11. JOINT ID PJ-4J	◆12. JOINT DESIGN P-17	13. INST LOCATION: [ ] STBD COMPT: [ ] C/L FR: [ ] PORT	14. WELDED LOCATION: [ ] SHOP [ ] FIELD	

BASE MATERIAL DATA

15. COMP DATA	16. MATERIAL	17. SIZE	18. THICKNESS	19. MATL SPEC	20. MIC NO.
COMPONENT A:					
COMPONENT B:					
21. [ ] SEAL RING [ ] BACK RING/STRIP	22. MATERIAL	23. SIZE	24. THICKNESS	25. MATL SPEC	26. MIC NO.

WELDING MATERIAL SPECIFICATIONS AND DATA

27. TYPE OF FILLER(S)	28. SIZE	29. MATL	30. MIL-SPEC	31. MIC NO.

WELD HISTORY

◆32. WELDING STANDARD: S9074-AR-GIB-010A/278	33. WELDING PROCEDURE:	34. DATA SHEET	35. POSITION: [ ] VERT [ ] HORZ [ ] FLAT [ ] OVHD [ ] FIXED [ ] ROLLED [ ] 45 DEG	
36. ACCESSIBILITY: [ ] 12"OR LESS [ ] UNRESTRICTED	37. PREHEAT TEMP	38. PREHEAT METHOD	39. POST HEAT. TEMP REQD: START TIME: STOP TIME:	
40. PURGE GAS:	41. FLOW RATE	42. SHIELD GAS	43. FLOW RATE	44. CUP SIZE / 45. TUNGSTEN SIZE

46. WELD LAYER	47. PROCESS	48. QUAL EXP DATE	49. AMPS	50. INTERPASS TEMP	51. WELDER SIGNATURE	52. DATE

53. INSPECTION DATA CONTAINED ON REVERSE OF THIS PAGE
REMARKS:

94. FINAL DISPOSITION: [ ] ACCEPT [ ] REJECT	95. NDT SUPERVISOR	DATE

THE PERSON DESIGNATED TO SIGN FOR AN ACTION VERIFIES, BASED ON PERSONAL OBSERVATION OR CERTIFIED RECORDS, AND CERTIFIES BY THEIR SIGNATURE THAT THE ACTION HAS BEEN PERFORMED IN ACCORDANCE WITH THE SPECIFIED REQUIREMENTS.

WELDING IN PROCESS CONTROL/NONDESTRUCTIVE TEST RECORD
QA FORM 20 (BACK)

NDT INSPECTION DATA

54. INSPECTION STANDARD	55. WELD CLASS	56. ACCEPTANCE STANDARD	57. ACCEPT CLASS

58. WELD PREP	59. INSP METHOD	60. ACCEPT/REJECT	61. NDT INSPECTOR SIGNATURE	62. DATE
COMPONENT A		[ ] ACCEPT [ ] REJECT		
COMPONENT B		[ ] ACCEPT [ ] REJECT		
63. JOINT FITUP		[ ] ACCEPT [ ] REJECT		

64. INSP LAYER	65. INSP METHOD	66. INSP PROC NO	67. ACCEPT/REJECT	68. NDT INSPECTOR SIGNATURE	69. DATE
			[ ] ACCEPT [ ] REJECT		
			[ ] ACCEPT [ ] REJECT		
			[ ] ACCEPT [ ] REJECT		
			[ ] ACCEPT [ ] REJECT		
			[ ] ACCEPT [ ] REJECT		

70. NDT INSPECTION DATA REPAIR NO._____ Defect: L W D

71. Repair Method: Excavation: L W D

72. INSP LAYER	73. INSP METHOD	74. INSP PROC NO.	75. ACCEPT/REJECT	76. NDT INSPECTOR SIGNATURE	77. DATE
			[ ] ACCEPT [ ] REJECT		
			[ ] ACCEPT [ ] REJECT		

78. NDT INSPECTION DATA REPAIR NO._____ Defect: L W D

79. Repair Method: Excavation: L W D

80. INSP LAYER	81. INSP METHOD	82. INSP PROC NO.	83. ACCEPT/REJECT	84. NDT INSPECTOR SIGNATURE	85. DATE
			[ ] ACCEPT [ ] REJECT		
			[ ] ACCEPT [ ] REJECT		

86. NDT INSPECTION DATA REPAIR NO._____ Defect: L W D

87. Repair Method: Excavation: L W D

88. INSP LAYER	89. INSP METHOD	90. INSP PROC NO.	91. ACCEPT/REJECT	92. NDT INSPECTOR SIGNATURE	93. DATE
			[ ] ACCEPT [ ] REJECT		
			[ ] ACCEPT [ ] REJECT		

53. REMARKS (Continued):

THE PERSON DESIGNATED TO SIGN FOR AN ACTION VERIFIES, BASED ON PERSONAL OBSERVATION OR CERTIFIED RECORDS, AND CERTIFIES BY THEIR SIGNATURE THAT THE ACTION HAS BEEN PERFORMED IN ACCORDANCE WITH THE SPECIFIED REQUIREMENTS.

WELDING IN PROCESS CONTROL/NONDESTRUCTIVE TEST RECORD
QA FORM 20 (FRONT)
When the form is used for production welding, the blocks marked with a ◆ must be completed by the planner.

◆1. PAGE 1 OF 2

◆2. SHIP USS BLUE RIDGE HULL NO. LCC19	◆3. JCN EM01-L261	◆4. CWP/REC SER. NO. N/A	◆5. LWC KTR	◆6. DATE 5 Apr 2025
◆7. SYSTEM Main Feedwater System	◆8. COMPONENT 1B Boiler Main Feedwater Discharge Gage Piping	◆9. DWG NO. Mapping Plan Enclosure-02	◆10. CWP STEP NO. 5.10.2.3	
◆11. JOINT ID PJ-5J	◆12. JOINT DESIGN P-14	13. INST LOCATION: [ ] STBD COMPT: [ ] C/L FR: [ ] PORT	14. WELDED LOCATION: [ ] SHOP [ ] FIELD	

BASE MATERIAL DATA

15. COMP DATA	16. MATERIAL	17. SIZE	18. THICKNESS	19. MATL SPEC	20. MIC NO.
COMPONENT A:					
COMPONENT B:					
21. [ ] SEAL RING [ ] BACK RING/STRIP	22. MATERIAL	23. SIZE	24. THICKNESS	25. MATL SPEC	26. MIC NO.

WELDING MATERIAL SPECIFICATIONS AND DATA

27. TYPE OF FILLER(S)	28. SIZE	29. MATL	30. MIL-SPEC	31. MIC NO.

WELD HISTORY

◆32. WELDING STANDARD: S9074-AR-GIB-010A/278	33. WELDING PROCEDURE:	34. DATA SHEET	35. POSITION: [ ] VERT [ ] HORZ [ ] FLAT [ ] OVHD [ ] FIXED [ ] ROLLED [ ] 45 DEG	
36. ACCESSIBILITY: [ ] 12"OR LESS [ ] UNRESTRICTED	37. PREHEAT TEMP	38. PREHEAT METHOD	39. POST HEAT. TEMP REQD: START TIME: STOP TIME:	
40. PURGE GAS:	41. FLOW RATE	42. SHIELD GAS	43. FLOW RATE	44. CUP SIZE / 45. TUNGSTEN SIZE

46. WELD LAYER	47. PROCESS	48. QUAL EXP DATE	49. AMPS	50. INTERPASS TEMP	51. WELDER SIGNATURE	52. DATE

53. INSPECTION DATA CONTAINED ON REVERSE OF THIS PAGE
REMARKS:

94. FINAL DISPOSITION: [ ] ACCEPT [ ] REJECT	95. NDT SUPERVISOR	DATE

THE PERSON DESIGNATED TO SIGN FOR AN ACTION VERIFIES, BASED ON PERSONAL OBSERVATION OR CERTIFIED RECORDS, AND CERTIFIES BY THEIR SIGNATURE THAT THE ACTION HAS BEEN PERFORMED IN ACCORDANCE WITH THE SPECIFIED REQUIREMENTS.

WELDING IN PROCESS CONTROL/NONDESTRUCTIVE TEST RECORD
QA FORM 20 (BACK)

NDT INSPECTION DATA

54. INSPECTION STANDARD	55. WELD CLASS	56. ACCEPTANCE STANDARD	57. ACCEPT CLASS

58. WELD PREP	59. INSP METHOD	60. ACCEPT/REJECT	61. NDT INSPECTOR SIGNATURE	62. DATE
COMPONENT A		[ ] ACCEPT [ ] REJECT		
COMPONENT B		[ ] ACCEPT [ ] REJECT		
63. JOINT FITUP		[ ] ACCEPT [ ] REJECT		

64. INSP LAYER	65. INSP METHOD	66. INSP PROC NO	67. ACCEPT/REJECT	68. NDT INSPECTOR SIGNATURE	69. DATE
			[ ] ACCEPT [ ] REJECT		
			[ ] ACCEPT [ ] REJECT		
			[ ] ACCEPT [ ] REJECT		
			[ ] ACCEPT [ ] REJECT		
			[ ] ACCEPT [ ] REJECT		

70. NDT INSPECTION DATA REPAIR NO._____ Defect: L W D

71. Repair Method: Excavation: L W D

72. INSP LAYER	73. INSP METHOD	74. INSP PROC NO.	75. ACCEPT/REJECT	76. NDT INSPECTOR SIGNATURE	77. DATE
			[ ] ACCEPT [ ] REJECT		
			[ ] ACCEPT [ ] REJECT		

78. NDT INSPECTION DATA REPAIR NO._____ Defect: L W D

79. Repair Method: Excavation: L W D

80. INSP LAYER	81. INSP METHOD	82. INSP PROC NO.	83. ACCEPT/REJECT	84. NDT INSPECTOR SIGNATURE	85. DATE
			[ ] ACCEPT [ ] REJECT		
			[ ] ACCEPT [ ] REJECT		

86. NDT INSPECTION DATA REPAIR NO._____ Defect: L W D

87. Repair Method: Excavation: L W D

88. INSP LAYER	89. INSP METHOD	90. INSP PROC NO.	91. ACCEPT/REJECT	92. NDT INSPECTOR SIGNATURE	93. DATE
			[ ] ACCEPT [ ] REJECT		
			[ ] ACCEPT [ ] REJECT		

53. REMARKS (Continued):

THE PERSON DESIGNATED TO SIGN FOR AN ACTION VERIFIES, BASED ON PERSONAL OBSERVATION OR CERTIFIED RECORDS, AND CERTIFIES BY THEIR SIGNATURE THAT THE ACTION HAS BEEN PERFORMED IN ACCORDANCE WITH THE SPECIFIED REQUIREMENTS.

WELDING IN PROCESS CONTROL/NONDESTRUCTIVE TEST RECORD
QA FORM 20 (FRONT)
When the form is used for production welding, the blocks marked with a ◆ must be completed by the planner.

◆1. PAGE 1 OF 2

◆2. SHIP USS BLUE RIDGE HULL NO. LCC19	◆3. JCN EM01-L261	◆4. CWP/REC SER. NO. N/A	◆5. LWC KTR	◆6. DATE 5 Apr 2025
◆7. SYSTEM Main Feedwater System	◆8. COMPONENT 1B Boiler Main Feedwater Discharge Gage Piping	◆9. DWG NO. Mapping Plan Enclosure-02	◆10. CWP STEP NO. 5.10.2.3	
◆11. JOINT ID PJ-6J	◆12. JOINT DESIGN P-14	13. INST LOCATION: [ ] STBD COMPT: [ ] C/L FR: [ ] PORT	14. WELDED LOCATION: [ ] SHOP [ ] FIELD	

BASE MATERIAL DATA

15. COMP DATA	16. MATERIAL	17. SIZE	18. THICKNESS	19. MATL SPEC	20. MIC NO.
COMPONENT A:					
COMPONENT B:					
21. [ ] SEAL RING [ ] BACK RING/STRIP	22. MATERIAL	23. SIZE	24. THICKNESS	25. MATL SPEC	26. MIC NO.

WELDING MATERIAL SPECIFICATIONS AND DATA

27. TYPE OF FILLER(S)	28. SIZE	29. MATL	30. MIL-SPEC	31. MIC NO.

WELD HISTORY

◆32. WELDING STANDARD: S9074-AR-GIB-010A/278	33. WELDING PROCEDURE:	34. DATA SHEET	35. POSITION: [ ] VERT [ ] HORZ [ ] FLAT [ ] OVHD [ ] FIXED [ ] ROLLED [ ] 45 DEG	
36. ACCESSIBILITY: [ ] 12"OR LESS [ ] UNRESTRICTED	37. PREHEAT TEMP	38. PREHEAT METHOD	39. POST HEAT. TEMP REQD: START TIME: STOP TIME:	
40. PURGE GAS:	41. FLOW RATE	42. SHIELD GAS	43. FLOW RATE	44. CUP SIZE / 45. TUNGSTEN SIZE

46. WELD LAYER	47. PROCESS	48. QUAL EXP DATE	49. AMPS	50. INTERPASS TEMP	51. WELDER SIGNATURE	52. DATE

53. INSPECTION DATA CONTAINED ON REVERSE OF THIS PAGE
REMARKS:

94. FINAL DISPOSITION: [ ] ACCEPT [ ] REJECT	95. NDT SUPERVISOR	DATE

THE PERSON DESIGNATED TO SIGN FOR AN ACTION VERIFIES, BASED ON PERSONAL OBSERVATION OR CERTIFIED RECORDS, AND CERTIFIES BY THEIR SIGNATURE THAT THE ACTION HAS BEEN PERFORMED IN ACCORDANCE WITH THE SPECIFIED REQUIREMENTS.

WELDING IN PROCESS CONTROL/NONDESTRUCTIVE TEST RECORD
QA FORM 20 (BACK)

NDT INSPECTION DATA

54. INSPECTION STANDARD	55. WELD CLASS	56. ACCEPTANCE STANDARD	57. ACCEPT CLASS

58. WELD PREP	59. INSP METHOD	60. ACCEPT/REJECT	61. NDT INSPECTOR SIGNATURE	62. DATE
COMPONENT A		[ ] ACCEPT [ ] REJECT		
COMPONENT B		[ ] ACCEPT [ ] REJECT		
63. JOINT FITUP		[ ] ACCEPT [ ] REJECT		

64. INSP LAYER	65. INSP METHOD	66. INSP PROC NO	67. ACCEPT/REJECT	68. NDT INSPECTOR SIGNATURE	69. DATE
			[ ] ACCEPT [ ] REJECT		
			[ ] ACCEPT [ ] REJECT		
			[ ] ACCEPT [ ] REJECT		
			[ ] ACCEPT [ ] REJECT		
			[ ] ACCEPT [ ] REJECT		

70. NDT INSPECTION DATA REPAIR NO._____ Defect: L W D

71. Repair Method: Excavation: L W D

72. INSP LAYER	73. INSP METHOD	74. INSP PROC NO.	75. ACCEPT/REJECT	76. NDT INSPECTOR SIGNATURE	77. DATE
			[ ] ACCEPT [ ] REJECT		
			[ ] ACCEPT [ ] REJECT		

78. NDT INSPECTION DATA REPAIR NO._____ Defect: L W D

79. Repair Method: Excavation: L W D

80. INSP LAYER	81. INSP METHOD	82. INSP PROC NO.	83. ACCEPT/REJECT	84. NDT INSPECTOR SIGNATURE	85. DATE
			[ ] ACCEPT [ ] REJECT		
			[ ] ACCEPT [ ] REJECT		

86. NDT INSPECTION DATA REPAIR NO._____ Defect: L W D

87. Repair Method: Excavation: L W D

88. INSP LAYER	89. INSP METHOD	90. INSP PROC NO.	91. ACCEPT/REJECT	92. NDT INSPECTOR SIGNATURE	93. DATE
			[ ] ACCEPT [ ] REJECT		
			[ ] ACCEPT [ ] REJECT		

53. REMARKS (Continued):

THE PERSON DESIGNATED TO SIGN FOR AN ACTION VERIFIES, BASED ON PERSONAL OBSERVATION OR CERTIFIED RECORDS, AND CERTIFIES BY THEIR SIGNATURE THAT THE ACTION HAS BEEN PERFORMED IN ACCORDANCE WITH THE SPECIFIED REQUIREMENTS.

SHOP TEST RECORD

QA FORM 28 Planning must fill in blocks identified by a ♦ prior to issuing

♦1. SHIP	HULL NO.	♦2. JCN	♦3. LWC/SHOP	♦4. CWP/REC SER NO.	5. SYSTEM/COMPONENT/ROTATABLE POOL SER NO.
USS BLUE RIDGE	LCC19	EM01-L261	KTR	N/A	MAIN STEAM SYSTEM GAGE PIPING

♦6. REFERENCES: TEST REF (E.G., MS, TECH MAN) & OTHER REFS (E.G., VLV DWG)		7. TEST GAGE RANGE /INSTRUMENT USED	SERIAL NO.	CAL DUE DATE	8. RELIEF VLV SET POINT
A.	S9086-RK-STM-010/CH-505 Rev. 6				
B.	206-ELM-250122 Rev. "-"				
C.					
D.					

9. TEST REQUIREMENTS & RESULTS

TEST TYPE KEY	**H** = STRENGTH AND POROSITY/ELEVATED PRESSURE TEST	**J** = MECHANICAL JOINT TIGHTNESS	**ST** = SEAT TIGHTNESS	**OP** = OPERATIONAL	**O** = OTHER (SPECIFY): _____

♦ TEST TYPE (SEE KEY)	♦ PARAGRAPH DESCRIBING VALVE POSITION AND POINT OF ENTRY	♦ REF LTR	GAGE USED (LTR FROM BLK 7)	♦ REQUIRED MEDIUM	MEDIUM USED	♦ REQUIRED PRESSURE	ACTUAL PRESSURE	♦ MINIMUM DURATION	ACTUAL DURATION	♦ ALLOWED LEAKAGE	ACTUAL LEAKAGE	SAT/UNSAT	SIGNATURE, BADGE NO. & DATE
H	5.6.3 for 1.3.7	A,B		Feed Water		986 PSIG		30 minutes		None			
H	5.6.3 for 1.3.8	A,B		Feed Water		986 PSIG		30 minutes		None			

10. REMARKS. (CRAFTSMAN/QAI SUBMIT A DF TO RESOLVE UNSAT DATA)

11. QA INSPECTOR/SHOP SUPERVISOR SIGNATURE/BADGE NO. (RECORD REVIEWED FOR FINAL ACCEPTANCE)	DATE	12. QAS SIGNATURE/BADGE NO. (RECORD HAS BEEN REVIEWED FOR COMPLETENESS)	DATE

SHOP TEST RECORD

QA FORM 28 Planning must fill in blocks identified by a ♦ prior to issuing

♦1. SHIP	HULL NO.	♦2. JCN	♦3. LWC/SHOP	♦4. CWP/REC SER NO.	5. SYSTEM/COMPONENT/ROTATABLE POOL SER NO.
USS BLUE RIDGE	LCC19	EM01-L261	KTR	N/A	MAIN TURBINE DRAIN SYSTEM GAGE PIPING

♦6. REFERENCES: TEST REF (E.G., MS, TECH MAN) & OTHER REFS (E.G., VLV DWG)		7. TEST GAGE RANGE /INSTRUMENT USED	SERIAL NO.	CAL DUE DATE	8. RELIEF VLV SET POINT
A.	S9086-RK-STM-010/CH-505 Rev. 6				
B.	206-ELM-250122 Rev. "-"				
C.					
D.					

9. TEST REQUIREMENTS & RESULTS

TEST TYPE KEY	**H** = STRENGTH AND POROSITY/ELEVATED PRESSURE TEST	**J** = MECHANICAL JOINT TIGHTNESS	**ST** = SEAT TIGHTNESS	**OP** = OPERATIONAL	**O** = OTHER (SPECIFY): _____

♦ TEST TYPE (SEE KEY)	♦ PARAGRAPH DESCRIBING VALVE POSITION AND POINT OF ENTRY	♦ REF LTR	GAGE USED (LTR FROM BLK 7)	♦ REQUIRED MEDIUM	MEDIUM USED	♦ REQUIRED PRESSURE	ACTUAL PRESSURE	♦ MINIMUM DURATION	ACTUAL DURATION	♦ ALLOWED LEAKAGE	ACTUAL LEAKAGE	SAT/UNSAT	SIGNATURE, BADGE NO. & DATE
H	5.7.3 for 1.3.9	A,B		Feed Water		986 PSIG		30 minutes		None			

10. REMARKS. (CRAFTSMAN/QAI SUBMIT A DF TO RESOLVE UNSAT DATA)

11. QA INSPECTOR/SHOP SUPERVISOR SIGNATURE/BADGE NO. (RECORD REVIEWED FOR FINAL ACCEPTANCE)	DATE	12. QAS SIGNATURE/BADGE NO. (RECORD HAS BEEN REVIEWED FOR COMPLETENESS)	DATE

SHOP TEST RECORD

Page 1 of 1

QA FORM 28 Planning must fill in blocks identified by a ♦ prior to issuing

♦1. SHIP	HULL NO.	♦2. JCN	♦3. LWC/SHOP	♦4. CWP/REC SER NO.	5. SYSTEM/COMPONENT/ROTATABLE POOL SER NO.
USS BLUE RIDGE	LCC19	EM01-L261	KTR	N/A	MAIN TURBINE DRAIN SYSTEM GAGE PIPING

♦6. REFERENCES: TEST REF (E.G., MS, TECH MAN) & OTHER REFS (E.G., VLV DWG)		7. TEST GAGE RANGE /INSTRUMENT USED	SERIAL NO.	CAL DUE DATE	8. RELIEF VLV SET POINT
A.	S9086-RK-STM-010/CH-505 Rev. 6				
B.	206-ELM-250122 Rev. "-"				
C.					
D.					

9. TEST REQUIREMENTS & RESULTS

TEST TYPE KEY	**H** = STRENGTH AND POROSITY/ELEVATED PRESSURE TEST	**J** = MECHANICAL JOINT TIGHTNESS	**ST** = SEAT TIGHTNESS	**OP** = OPERATIONAL	**O** = OTHER (SPECIFY): _____

♦ TEST TYPE (SEE KEY)	♦ PARAGRAPH DESCRIBING VALVE POSITION AND POINT OF ENTRY	♦ REF LTR	GAGE USED (LTR FROM BLK 7)	♦ REQUIRED MEDIUM	MEDIUM USED	♦ REQUIRED PRESSURE	ACTUAL PRESSURE	♦ MINIMUM DURATION	ACTUAL DURATION	♦ ALLOWED LEAKAGE	ACTUAL LEAKAGE	SAT/UNSAT	SIGNATURE, BADGE NO. & DATE
H	5.7.4 for 1.3.10	A,B		Feed Water		562 PSIG		30 minutes		None			

10. REMARKS. (CRAFTSMAN/QAI SUBMIT A DF TO RESOLVE UNSAT DATA)

11. QA INSPECTOR/SHOP SUPERVISOR SIGNATURE/BADGE NO. (RECORD REVIEWED FOR FINAL ACCEPTANCE)	DATE	12. QAS SIGNATURE/BADGE NO. (RECORD HAS BEEN REVIEWED FOR COMPLETENESS)	DATE

SHOP TEST RECORD

QA FORM 28 Planning must fill in blocks identified by a ♦ prior to issuing

♦1. SHIP	HULL NO.	♦2. JCN	♦3. LWC/SHOP	♦4. CWP/REC SER NO.	5. SYSTEM/COMPONENT/ROTATABLE POOL SER NO.
USS BLUE RIDGE	LCC19	EM01-L261	KTR	N/A	MAIN TURBINE DRAIN SYSTEM GAGE PIPING

♦6. REFERENCES: TEST REF (E.G., MS, TECH MAN) & OTHER REFS (E.G., VLV DWG)		7. TEST GAGE RANGE /INSTRUMENT USED	SERIAL NO.	CAL DUE DATE	8. RELIEF VLV SET POINT
A.	S9086-RK-STM-010/CH-505 Rev. 6				
B.	206-ELM-250122 Rev. "-"				
C.					
D.					

9. TEST REQUIREMENTS & RESULTS

TEST TYPE KEY	**H** = STRENGTH AND POROSITY/ELEVATED PRESSURE TEST	**J** = MECHANICAL JOINT TIGHTNESS	**ST** = SEAT TIGHTNESS	**OP** = OPERATIONAL	**O** = OTHER (SPECIFY): _____

♦ TEST TYPE (SEE KEY)	♦ PARAGRAPH DESCRIBING VALVE POSITION AND POINT OF ENTRY	♦ REF LTR	GAGE USED (LTR FROM BLK 7)	♦ REQUIRED MEDIUM	MEDIUM USED	♦ REQUIRED PRESSURE	ACTUAL PRESSURE	♦ MINIMUM DURATION	ACTUAL DURATION	♦ ALLOWED LEAKAGE	ACTUAL LEAKAGE	SAT/UNSAT	SIGNATURE, BADGE NO. & DATE
H	5.7.5 for 1.3.11	A,B		Feed Water		81 PSIG		30 minutes		None			

10. REMARKS. (CRAFTSMAN/QAI SUBMIT A DF TO RESOLVE UNSAT DATA)

11. QA INSPECTOR/SHOP SUPERVISOR SIGNATURE/BADGE NO. (RECORD REVIEWED FOR FINAL ACCEPTANCE)	DATE	12. QAS SIGNATURE/BADGE NO. (RECORD HAS BEEN REVIEWED FOR COMPLETENESS)	DATE

SHOP TEST RECORD

Page 1 of 1

QA FORM 28 Planning must fill in blocks identified by a ♦ prior to issuing

♦1. SHIP	HULL NO.	♦2. JCN	♦3. LWC/SHOP	♦4. CWP/REC SER NO.	5. SYSTEM/COMPONENT/ROTATABLE POOL SER NO.
USS BLUE RIDGE	LCC19	EM01-L261	KTR	N/A	600PSI AUX STEAM SYSTEM GAGE PIPING

	♦6. REFERENCES: TEST REF (E.G., MS, TECH MAN) & OTHER REFS (E.G., VLV DWG)	7. TEST GAGE RANGE /INSTRUMENT USED	SERIAL NO.	CAL DUE DATE	8. RELIEF VLV SET POINT
A.	S9086-RK-STM-010/CH-505 Rev. 6				
B.	206-ELM-250122 Rev. "-"				
C.					
D.					

9. TEST REQUIREMENTS & RESULTS

TEST TYPE KEY | **H** = STRENGTH AND POROSITY/ELEVATED PRESSURE TEST | **J** = MECHANICAL JOINT TIGHTNESS | **ST** = SEAT TIGHTNESS | **OP** = OPERATIONAL | **O** = OTHER (SPECIFY): _____

♦ TEST TYPE (SEE KEY)	♦ PARAGRAPH DESCRIBING VALVE POSITION AND POINT OF ENTRY	♦ REF LTR	GAGE USED (LTR FROM BLK 7)	♦ REQUIRED MEDIUM	MEDIUM USED	♦ REQUIRED PRESSURE	ACTUAL PRESSURE	♦ MINIMUM DURATION	ACTUAL DURATION	♦ ALLOWED LEAKAGE	ACTUAL LEAKAGE	SAT/UNSAT	SIGNATURE, BADGE NO. & DATE
H	5.8.3 for 1.3.12	A,B		Feed Water		986 PSIG		30 minutes		None			
H	5.8.3 for 1.3.13	A,B		Feed Water		986 PSIG		30 minutes		None			

10. REMARKS. (CRAFTSMAN/QAI SUBMIT A DF TO RESOLVE UNSAT DATA)

11. QA INSPECTOR/SHOP SUPERVISOR SIGNATURE/BADGE NO. (RECORD REVIEWED FOR FINAL ACCEPTANCE)	DATE	12. QAS SIGNATURE/BADGE NO. (RECORD HAS BEEN REVIEWED FOR COMPLETENESS)	DATE

SHOP TEST RECORD

QA FORM 28 Planning must fill in blocks identified by a ♦ prior to issuing

♦1. SHIP	HULL NO.	♦2. JCN	♦3. LWC/SHOP	♦4. CWP/REC SER NO.	5. SYSTEM/COMPONENT/ROTATABLE POOL SER NO.
USS BLUE RIDGE	LCC19	EM01-L261	KTR	N/A	MAIN TURBINE GLAND SEAL STEAM GAGE PIPING

	♦6. REFERENCES: TEST REF (E.G., MS, TECH MAN) & OTHER REFS (E.G., VLV DWG)	7. TEST GAGE RANGE /INSTRUMENT USED	SERIAL NO.	CAL DUE DATE	8. RELIEF VLV SET POINT
A.	S9086-RK-STM-010/CH-505 Rev. 6				
B.	206-ELM-250122 Rev. "-"				
C.					
D.					

9. TEST REQUIREMENTS & RESULTS

TEST TYPE KEY	**H** = STRENGTH AND POROSITY/ELEVATED PRESSURE TEST	**J** = MECHANICAL JOINT TIGHTNESS	**ST** = SEAT TIGHTNESS	**OP** = OPERATIONAL	**O** = OTHER (SPECIFY): _____

♦ TEST TYPE (SEE KEY)	♦ PARAGRAPH DESCRIBING VALVE POSITION AND POINT OF ENTRY	♦ REF LTR	GAGE USED (LTR FROM BLK 7)	♦ REQUIRED MEDIUM	MEDIUM USED	♦ REQUIRED PRESSURE	ACTUAL PRESSURE	♦ MINIMUM DURATION	ACTUAL DURATION	♦ ALLOWED LEAKAGE	ACTUAL LEAKAGE	SAT/UNSAT	SIGNATURE, BADGE NO. & DATE
H	5.9.3 for 1.3.14	A,B		Feed Water		50 PSIG		30 minutes		None			

10. REMARKS. (CRAFTSMAN/QAI SUBMIT A DF TO RESOLVE UNSAT DATA)

11. QA INSPECTOR/SHOP SUPERVISOR SIGNATURE/BADGE NO. (RECORD REVIEWED FOR FINAL ACCEPTANCE)	DATE	12. QAS SIGNATURE/BADGE NO. (RECORD HAS BEEN REVIEWED FOR COMPLETENESS)	DATE

SHOP TEST RECORD

Page 1 of 1

QA FORM 28 Planning must fill in blocks identified by a ♦ prior to issuing

♦1. SHIP	HULL NO.	♦2. JCN	♦3. LWC/SHOP	♦4. CWP/REC SER NO.	5. SYSTEM/COMPONENT/ROTATABLE POOL SER NO.
USS BLUE RIDGE	LCC19	EM01-L261	KTR	N/A	MAIN FEEDWATER SYSTEM GAGE PIPING

♦6. REFERENCES: TEST REF (E.G., MS, TECH MAN) & OTHER REFS (E.G., VLV DWG)		7. TEST GAGE RANGE /INSTRUMENT USED	SERIAL NO.	CAL DUE DATE	8. RELIEF VLV SET POINT
A.	S9086-RK-STM-010/CH-505 Rev. 6				
B.	206-ELM-250122 Rev. "-"				
C.					
D.					

9. TEST REQUIREMENTS & RESULTS

TEST TYPE KEY	**H** = STRENGTH AND POROSITY/ELEVATED PRESSURE TEST	**J** = MECHANICAL JOINT TIGHTNESS	**ST** = SEAT TIGHTNESS	**OP** = OPERATIONAL	**O** = OTHER (SPECIFY): _____

♦ TEST TYPE (SEE KEY)	♦ PARAGRAPH DESCRIBING VALVE POSITION AND POINT OF ENTRY	♦ REF LTR	GAGE USED (LTR FROM BLK 7)	♦ REQUIRED MEDIUM	MEDIUM USED	♦ REQUIRED PRESSURE	ACTUAL PRESSURE	♦ MINIMUM DURATION	ACTUAL DURATION	♦ ALLOWED LEAKAGE	ACTUAL LEAKAGE	SAT/UNSAT	SIGNATURE, BADGE NO. & DATE
H	5.10.3 for 1.3.15	A,B		Feed Water		1,560 PSIG		30 minutes		None			
H	5.10.3 for 1.3.16	A,B		Feed Water		1,560 PSIG		30 minutes		None			

10. REMARKS. (CRAFTSMAN/QAI SUBMIT A DF TO RESOLVE UNSAT DATA)

11. QA INSPECTOR/SHOP SUPERVISOR SIGNATURE/BADGE NO. (RECORD REVIEWED FOR FINAL ACCEPTANCE)	DATE	12. QAS SIGNATURE/BADGE NO. (RECORD HAS BEEN REVIEWED FOR COMPLETENESS)	DATE

SHOP TEST RECORD

QA FORM 28 Planning must fill in blocks identified by a ♦ prior to issuing

♦1. SHIP	HULL NO.	♦2. JCN	♦3. LWC/SHOP	♦4. CWP/REC SER NO.	5. SYSTEM/COMPONENT/ROTATABLE POOL SER NO.
USS BLUE RIDGE	LCC19	EM01-L261	KTR	N/A	AUX EXHAUST STEAM SYSTEM GAGE PIPING

♦6. REFERENCES: TEST REF (E.G., MS, TECH MAN) & OTHER REFS (E.G., VLV DWG)		7. TEST GAGE RANGE /INSTRUMENT USED	SERIAL NO.	CAL DUE DATE	8. RELIEF VLV SET POINT
A.	S9086-RK-STM-010/CH-505 Rev. 6				
B.	206-ELM-250122 Rev. "-"				
C.					
D.					

9. TEST REQUIREMENTS & RESULTS

TEST TYPE KEY	**H** = STRENGTH AND POROSITY/ELEVATED PRESSURE TEST	**J** = MECHANICAL JOINT TIGHTNESS	**ST** = SEAT TIGHTNESS	**OP** = OPERATIONAL	**O** = OTHER (SPECIFY): _____

♦ TEST TYPE (SEE KEY)	♦ PARAGRAPH DESCRIBING VALVE POSITION AND POINT OF ENTRY	♦ REF LTR	GAGE USED (LTR FROM BLK 7)	♦ REQUIRED MEDIUM	MEDIUM USED	♦ REQUIRED PRESSURE	ACTUAL PRESSURE	♦ MINIMUM DURATION	ACTUAL DURATION	♦ ALLOWED LEAKAGE	ACTUAL LEAKAGE	SAT/UNSAT	SIGNATURE, BADGE NO. & DATE
H	5.11.3 for 1.3.17	A,B		Feed Water		68 PSIG		30 minutes		None			
H	5.11.3 for 1.3.18	A,B		Feed Water		68 PSIG		30 minutes		None			

10. REMARKS. (CRAFTSMAN/QAI SUBMIT A DF TO RESOLVE UNSAT DATA)

11. QA INSPECTOR/SHOP SUPERVISOR SIGNATURE/BADGE NO. (RECORD REVIEWED FOR FINAL ACCEPTANCE)	DATE	12. QAS SIGNATURE/BADGE NO. (RECORD HAS BEEN REVIEWED FOR COMPLETENESS)	DATE

SHOP TEST RECORD

Page 1 of 1

QA FORM 28 Planning must fill in blocks identified by a ♦ prior to issuing

♦1. SHIP	HULL NO.	♦2. JCN	♦3. LWC/SHOP	♦4. CWP/REC SER NO.	5. SYSTEM/COMPONENT/ROTATABLE POOL SER NO.
USS BLUE RIDGE	LCC19	EM01-L261	KTR	N/A	AUX EXHAUST STEAM SYSTEM GAGE PIPING

	♦6. REFERENCES: TEST REF (E.G., MS, TECH MAN) & OTHER REFS (E.G., VLV DWG)	7. TEST GAGE RANGE /INSTRUMENT USED	SERIAL NO.	CAL DUE DATE	8. RELIEF VLV SET POINT
A.	S9086-RK-STM-010/CH-505 Rev. 6				
B.	206-ELM-250122 Rev. "-"				
C.					
D.					

9. TEST REQUIREMENTS & RESULTS

TEST TYPE KEY	**H** = STRENGTH AND POROSITY/ELEVATED PRESSURE TEST	**J** = MECHANICAL JOINT TIGHTNESS	**ST** = SEAT TIGHTNESS	**OP** = OPERATIONAL	**O** = OTHER (SPECIFY): _____

♦ TEST TYPE (SEE KEY)	♦ PARAGRAPH DESCRIBING VALVE POSITION AND POINT OF ENTRY	♦ REF LTR	GAGE USED (LTR FROM BLK 7)	♦ REQUIRED MEDIUM	MEDIUM USED	♦ REQUIRED PRESSURE	ACTUAL PRESSURE	♦ MINIMUM DURATION	ACTUAL DURATION	♦ ALLOWED LEAKAGE	ACTUAL LEAKAGE	SAT/UNSAT	SIGNATURE, BADGE NO. & DATE
H	5.11.4 for 1.3.19	A,B		Feed Water		81 PSIG		30 minutes		None			

10. REMARKS. (CRAFTSMAN/QAI SUBMIT A DF TO RESOLVE UNSAT DATA)

11. QA INSPECTOR/SHOP SUPERVISOR SIGNATURE/BADGE NO. (RECORD REVIEWED FOR FINAL ACCEPTANCE)	DATE	12. QAS SIGNATURE/BADGE NO. (RECORD HAS BEEN REVIEWED FOR COMPLETENESS)	DATE

SHOP TEST RECORD

QA FORM 28 Planning must fill in blocks identified by a ♦ prior to issuing

♦1. SHIP	HULL NO.	♦2. JCN	♦3. LWC/SHOP	♦4. CWP/REC SER NO.	5. SYSTEM/COMPONENT/ROTATABLE POOL SER NO.
USS BLUE RIDGE	LCC19	EM01-L261	KTR	N/A	150PSI AUX STEAM SYSTEM GAGE PIPING

♦6. REFERENCES: TEST REF (E.G., MS, TECH MAN) & OTHER REFS (E.G., VLV DWG)		7. TEST GAGE RANGE /INSTRUMENT USED	SERIAL NO.	CAL DUE DATE	8. RELIEF VLV SET POINT
A.	S9086-RK-STM-010/CH-505 Rev. 6				
B.	206-ELM-250122 Rev. "-"				
C.					
D.					

9. TEST REQUIREMENTS & RESULTS

TEST TYPE KEY	**H** = STRENGTH AND POROSITY/ELEVATED PRESSURE TEST	**J** = MECHANICAL JOINT TIGHTNESS	**ST** = SEAT TIGHTNESS	**OP** = OPERATIONAL	**O** = OTHER (SPECIFY): _____

♦ TEST TYPE (SEE KEY)	♦ PARAGRAPH DESCRIBING VALVE POSITION AND POINT OF ENTRY	♦ REF LTR	GAGE USED (LTR FROM BLK 7)	♦ REQUIRED MEDIUM	MEDIUM USED	♦ REQUIRED PRESSURE	ACTUAL PRESSURE	♦ MINIMUM DURATION	ACTUAL DURATION	♦ ALLOWED LEAKAGE	ACTUAL LEAKAGE	SAT/UNSAT	SIGNATURE, BADGE NO. & DATE
H	5.12.3 for 1.3.20	A,B		Feed Water		237 PSIG		30 minutes		None			

10. REMARKS. (CRAFTSMAN/QAI SUBMIT A DF TO RESOLVE UNSAT DATA)

11. QA INSPECTOR/SHOP SUPERVISOR SIGNATURE/BADGE NO. (RECORD REVIEWED FOR FINAL ACCEPTANCE)	DATE	12. QAS SIGNATURE/BADGE NO. (RECORD HAS BEEN REVIEWED FOR COMPLETENESS)	DATE

SHOP TEST RECORD

Page 1 of 1

QA FORM 28 Planning must fill in blocks identified by a ♦ prior to issuing

♦1. SHIP	HULL NO.	♦2. JCN	♦3. LWC/SHOP	♦4. CWP/REC SER NO.	5. SYSTEM/COMPONENT/ROTATABLE POOL SER NO.
USS BLUE RIDGE	LCC19	EM01-L261	KTR	N/A	MAIN CIRC PMP LO SYSTEM GAGE PIPING

	♦6. REFERENCES: TEST REF (E.G., MS, TECH MAN) & OTHER REFS (E.G., VLV DWG)	7. TEST GAGE RANGE /INSTRUMENT USED	SERIAL NO.	CAL DUE DATE	8. RELIEF VLV SET POINT
A.	S9086-RK-STM-010/CH-505 Rev. 6				
B.	206-ELM-250122 Rev. "-"				
C.					
D.					

9. TEST REQUIREMENTS & RESULTS

TEST TYPE KEY	**H** = STRENGTH AND POROSITY/ELEVATED PRESSURE TEST	**J** = MECHANICAL JOINT TIGHTNESS	**ST** = SEAT TIGHTNESS	**OP** = OPERATIONAL	**O** = OTHER (SPECIFY): _____

♦ TEST TYPE (SEE KEY)	♦ PARAGRAPH DESCRIBING VALVE POSITION AND POINT OF ENTRY	♦ REF LTR	GAGE USED (LTR FROM BLK 7)	♦ REQUIRED MEDIUM	MEDIUM USED	♦ REQUIRED PRESSURE	ACTUAL PRESSURE	♦ MINIMUM DURATION	ACTUAL DURATION	♦ ALLOWED LEAKAGE	ACTUAL LEAKAGE	SAT/UNSAT	SIGNATURE, BADGE NO. & DATE
H	5.13.3 for 1.3.21	A,B		Clean Fresh Water		68 PSIG		30 minutes		None			

10. REMARKS. (CRAFTSMAN/QAI SUBMIT A DF TO RESOLVE UNSAT DATA)

11. QA INSPECTOR/SHOP SUPERVISOR SIGNATURE/BADGE NO. (RECORD REVIEWED FOR FINAL ACCEPTANCE)	DATE	12. QAS SIGNATURE/BADGE NO. (RECORD HAS BEEN REVIEWED FOR COMPLETENESS)	DATE

SHOP TEST RECORD

QA FORM 28 Planning must fill in blocks identified by a ♦ prior to issuing

♦1. SHIP	HULL NO.	♦2. JCN	♦3. LWC/SHOP	♦4. CWP/REC SER NO.	5. SYSTEM/COMPONENT/ROTATABLE POOL SER NO.
USS BLUE RIDGE	LCC19	EM01-L261	KTR	N/A	LUBE OIL SYSTEM GAGE PIPING

♦6. REFERENCES: TEST REF (E.G., MS, TECH MAN) & OTHER REFS (E.G., VLV DWG)		7. TEST GAGE RANGE /INSTRUMENT USED	SERIAL NO.	CAL DUE DATE	8. RELIEF VLV SET POINT
A.	S9086-RK-STM-010/CH-505 Rev. 6				
B.	206-ELM-250122 Rev. "-"				
C.					
D.					

9. TEST REQUIREMENTS & RESULTS

TEST TYPE KEY	**H** = STRENGTH AND POROSITY/ELEVATED PRESSURE TEST	**J** = MECHANICAL JOINT TIGHTNESS	**ST** = SEAT TIGHTNESS	**OP** = OPERATIONAL	**O** = OTHER (SPECIFY): _____

♦ TEST TYPE (SEE KEY)	♦ PARAGRAPH DESCRIBING VALVE POSITION AND POINT OF ENTRY	♦ REF LTR	GAGE USED (LTR FROM BLK 7)	♦ REQUIRED MEDIUM	MEDIUM USED	♦ REQUIRED PRESSURE	ACTUAL PRESSURE	♦ MINIMUM DURATION	ACTUAL DURATION	♦ ALLOWED LEAKAGE	ACTUAL LEAKAGE	SAT/UNSAT	SIGNATURE, BADGE NO. & DATE
H	5.14.5 for 1.3.22	A,B		Clean Fresh Water		88 PSIG		30 minutes		None			
H	5.14.5 for 1.3.23	A,B		Clean Fresh Water		88 PSIG		30 minutes		None			

10. REMARKS. (CRAFTSMAN/QAI SUBMIT A DF TO RESOLVE UNSAT DATA)

11. QA INSPECTOR/SHOP SUPERVISOR SIGNATURE/BADGE NO. (RECORD REVIEWED FOR FINAL ACCEPTANCE)	DATE	12. QAS SIGNATURE/BADGE NO. (RECORD HAS BEEN REVIEWED FOR COMPLETENESS)	DATE

SHOP TEST RECORD

Page 1 of 1

QA FORM 28 Planning must fill in blocks identified by a ♦ prior to issuing

♦1. SHIP	HULL NO.	♦2. JCN	♦3. LWC/SHOP	♦4. CWP/REC SER NO.	5. SYSTEM/COMPONENT/ROTATABLE POOL SER NO.
USS BLUE RIDGE	LCC19	EM01-L261	KTR	N/A	CONDENSATE SYSTEM GAGE PIPING

	♦6. REFERENCES: TEST REF (E.G., MS, TECH MAN) & OTHER REFS (E.G., VLV DWG)	7. TEST GAGE RANGE /INSTRUMENT USED	SERIAL NO.	CAL DUE DATE	8. RELIEF VLV SET POINT
A.	S9086-RK-STM-010/CH-505 Rev. 6				
B.	206-ELM-250122 Rev. "-"				
C.					
D.					

9. TEST REQUIREMENTS & RESULTS

TEST TYPE KEY	**H** = STRENGTH AND POROSITY/ELEVATED PRESSURE TEST	**J** = MECHANICAL JOINT TIGHTNESS	**ST** = SEAT TIGHTNESS	**OP** = OPERATIONAL	**O** = OTHER (SPECIFY): _____

♦ TEST TYPE (SEE KEY)	♦ PARAGRAPH DESCRIBING VALVE POSITION AND POINT OF ENTRY	♦ REF LTR	GAGE USED (LTR FROM BLK 7)	♦ REQUIRED MEDIUM	MEDIUM USED	♦ REQUIRED PRESSURE	ACTUAL PRESSURE	♦ MINIMUM DURATION	ACTUAL DURATION	♦ ALLOWED LEAKAGE	ACTUAL LEAKAGE	SAT/UNSAT	SIGNATURE, BADGE NO. & DATE
H	5.15.3 for 1.3.24	A,B		Clean Fresh Water		68 PSIG		30 minutes		None			

10. REMARKS. (CRAFTSMAN/QAI SUBMIT A DF TO RESOLVE UNSAT DATA)

11. QA INSPECTOR/SHOP SUPERVISOR SIGNATURE/BADGE NO. (RECORD REVIEWED FOR FINAL ACCEPTANCE)	DATE	12. QAS SIGNATURE/BADGE NO. (RECORD HAS BEEN REVIEWED FOR COMPLETENESS)	DATE

SHOP TEST RECORD

Page 1 of 1

QA FORM 28 Planning must fill in blocks identified by a ♦ prior to issuing

♦1. SHIP	HULL NO.	♦2. JCN	♦3. LWC/SHOP	♦4. CWP/REC SER NO.	5. SYSTEM/COMPONENT/ROTATABLE POOL SER NO.
USS BLUE RIDGE	LCC19	EM01-L261	KTR	N/A	CONDENSATE SYSTEM GAGE PIPING

♦6. REFERENCES: TEST REF (E.G., MS, TECH MAN) & OTHER REFS (E.G., VLV DWG)		7. TEST GAGE RANGE /INSTRUMENT USED	SERIAL NO.	CAL DUE DATE	8. RELIEF VLV SET POINT
A.	S9086-RK-STM-010/CH-505 Rev. 6				
B.	206-ELM-250122 Rev. "-"				
C.					
D.					

9. TEST REQUIREMENTS & RESULTS

TEST TYPE KEY	**H** = STRENGTH AND POROSITY/ELEVATED PRESSURE TEST	**J** = MECHANICAL JOINT TIGHTNESS	**ST** = SEAT TIGHTNESS	**OP** = OPERATIONAL	**O** = OTHER (SPECIFY): _____

♦ TEST TYPE (SEE KEY)	♦ PARAGRAPH DESCRIBING VALVE POSITION AND POINT OF ENTRY	♦ REF LTR	GAGE USED (LTR FROM BLK 7)	♦ REQUIRED MEDIUM	MEDIUM USED	♦ REQUIRED PRESSURE	ACTUAL PRESSURE	♦ MINIMUM DURATION	ACTUAL DURATION	♦ ALLOWED LEAKAGE	ACTUAL LEAKAGE	SAT/UNSAT	SIGNATURE, BADGE NO. & DATE
H	5.15.4 for 1.3.25	A,B		Feed Water		117 PSIG		30 minutes		None			
H	5.15.4 for 1.3.26	A,B		Feed Water		117 PSIG		30 minutes		None			

10. REMARKS. (CRAFTSMAN/QAI SUBMIT A DF TO RESOLVE UNSAT DATA)

11. QA INSPECTOR/SHOP SUPERVISOR SIGNATURE/BADGE NO. (RECORD REVIEWED FOR FINAL ACCEPTANCE)	DATE	12. QAS SIGNATURE/BADGE NO. (RECORD HAS BEEN REVIEWED FOR COMPLETENESS)	DATE

SHOP TEST RECORD

Page 1 of 1

QA FORM 28 Planning must fill in blocks identified by a ♦ prior to issuing

♦1. SHIP	HULL NO.	♦2. JCN	♦3. LWC/SHOP	♦4. CWP/REC SER NO.	5. SYSTEM/COMPONENT/ROTATABLE POOL SER NO.
USS BLUE RIDGE	LCC19	EM01-L261	KTR	N/A	CONTROL AIR SYSTEM GAGE PIPING

	♦6. REFERENCES: TEST REF (E.G., MS, TECH MAN) & OTHER REFS (E.G., VLV DWG)	7. TEST GAGE RANGE /INSTRUMENT USED	SERIAL NO.	CAL DUE DATE	8. RELIEF VLV SET POINT
A.	S9086-RK-STM-010/CH-505 Rev. 6				
B.	206-ELM-250122 Rev. "-"				
C.					
D.					

9. TEST REQUIREMENTS & RESULTS

TEST TYPE KEY	**H** = STRENGTH AND POROSITY/ELEVATED PRESSURE TEST	**J** = MECHANICAL JOINT TIGHTNESS	**ST** = SEAT TIGHTNESS	**OP** = OPERATIONAL	**O** = OTHER (SPECIFY): _____

♦ TEST TYPE (SEE KEY)	♦ PARAGRAPH DESCRIBING VALVE POSITION AND POINT OF ENTRY	♦ REF LTR	GAGE USED (LTR FROM BLK 7)	♦ REQUIRED MEDIUM	MEDIUM USED	♦ REQUIRED PRESSURE	ACTUAL PRESSURE	♦ MINIMUM DURATION	ACTUAL DURATION	♦ ALLOWED LEAKAGE	ACTUAL LEAKAGE	SAT/UNSAT	SIGNATURE, BADGE NO. & DATE
H	5.16.3 for 1.3.27	A,B		Clean Fresh Water		203 PSIG		30 minutes		None			

10. REMARKS. (CRAFTSMAN/QAI SUBMIT A DF TO RESOLVE UNSAT DATA)

11. QA INSPECTOR/SHOP SUPERVISOR SIGNATURE/BADGE NO. (RECORD REVIEWED FOR FINAL ACCEPTANCE)	DATE	12. QAS SIGNATURE/BADGE NO. (RECORD HAS BEEN REVIEWED FOR COMPLETENESS)	DATE

SHOP TEST RECORD

Page 1 of 1

QA FORM 28 Planning must fill in blocks identified by a ♦ prior to issuing

♦1. SHIP	HULL NO.	♦2. JCN	♦3. LWC/SHOP	♦4. CWP/REC SER NO.	5. SYSTEM/COMPONENT/ROTATABLE POOL SER NO.
USS BLUE RIDGE	LCC19	EM01-L261	KTR	N/A	AUX SEAWATER CLG SYSTEM GAGE PIPING

♦6. REFERENCES: TEST REF (E.G., MS, TECH MAN) & OTHER REFS (E.G., VLV DWG)		7. TEST GAGE RANGE /INSTRUMENT USED	SERIAL NO.	CAL DUE DATE	8. RELIEF VLV SET POINT
A.	S9086-RK-STM-010/CH-505 Rev. 6				
B.	206-ELM-250122 Rev. "-"				
C.					
D.					

9. TEST REQUIREMENTS & RESULTS

TEST TYPE KEY	**H** = STRENGTH AND POROSITY/ELEVATED PRESSURE TEST	**J** = MECHANICAL JOINT TIGHTNESS	**ST** = SEAT TIGHTNESS	**OP** = OPERATIONAL	**O** = OTHER (SPECIFY): _____

♦ TEST TYPE (SEE KEY)	♦ PARAGRAPH DESCRIBING VALVE POSITION AND POINT OF ENTRY	♦ REF LTR	GAGE USED (LTR FROM BLK 7)	♦ REQUIRED MEDIUM	MEDIUM USED	♦ REQUIRED PRESSURE	ACTUAL PRESSURE	♦ MINIMUM DURATION	ACTUAL DURATION	♦ ALLOWED LEAKAGE	ACTUAL LEAKAGE	SAT/UNSAT	SIGNATURE, BADGE NO. & DATE
H	5.17.3 for 1.3.28	A,B		Clean Fresh Water		68 PSIG		30 minutes		None			

10. REMARKS. (CRAFTSMAN/QAI SUBMIT A DF TO RESOLVE UNSAT DATA)

11. QA INSPECTOR/SHOP SUPERVISOR SIGNATURE/BADGE NO. (RECORD REVIEWED FOR FINAL ACCEPTANCE)	DATE	12. QAS SIGNATURE/BADGE NO. (RECORD HAS BEEN REVIEWED FOR COMPLETENESS)	DATE

SHOP TEST RECORD

Page 1 of 1

QA FORM 28 Planning must fill in blocks identified by a ♦ prior to issuing

♦1. SHIP	HULL NO.	♦2. JCN	♦3. LWC/SHOP	♦4. CWP/REC SER NO.	5. SYSTEM/COMPONENT/ROTATABLE POOL SER NO.
USS BLUE RIDGE	LCC19	EM01-L261	KTR	N/A	FIREMAIN SYSTEM GAGE PIPING

♦6. REFERENCES: TEST REF (E.G., MS, TECH MAN) & OTHER REFS (E.G., VLV DWG)		7. TEST GAGE RANGE /INSTRUMENT USED	SERIAL NO.	CAL DUE DATE	8. RELIEF VLV SET POINT
A.	S9086-RK-STM-010/CH-505 Rev. 6				
B.	206-ELM-250122 Rev. "-"				
C.					
D.					

9. TEST REQUIREMENTS & RESULTS

TEST TYPE KEY	**H** = STRENGTH AND POROSITY/ELEVATED PRESSURE TEST	**J** = MECHANICAL JOINT TIGHTNESS	**ST** = SEAT TIGHTNESS	**OP** = OPERATIONAL	**O** = OTHER (SPECIFY): _____

♦ TEST TYPE (SEE KEY)	♦ PARAGRAPH DESCRIBING VALVE POSITION AND POINT OF ENTRY	♦ REF LTR	GAGE USED (LTR FROM BLK 7)	♦ REQUIRED MEDIUM	MEDIUM USED	♦ REQUIRED PRESSURE	ACTUAL PRESSURE	♦ MINIMUM DURATION	ACTUAL DURATION	♦ ALLOWED LEAKAGE	ACTUAL LEAKAGE	SAT/UNSAT	SIGNATURE, BADGE NO. & DATE
H	5.18.3 for 1.3.29	A,B		Clean Fresh Water		243 PSIG		30 minutes		None			
H	5.18.3 for 1.3.30	A,B		Clean Fresh Water		243 PSIG		30 minutes		None			

10. REMARKS. (CRAFTSMAN/QAI SUBMIT A DF TO RESOLVE UNSAT DATA)

11. QA INSPECTOR/SHOP SUPERVISOR SIGNATURE/BADGE NO. (RECORD REVIEWED FOR FINAL ACCEPTANCE)	DATE	12. QAS SIGNATURE/BADGE NO. (RECORD HAS BEEN REVIEWED FOR COMPLETENESS)	DATE