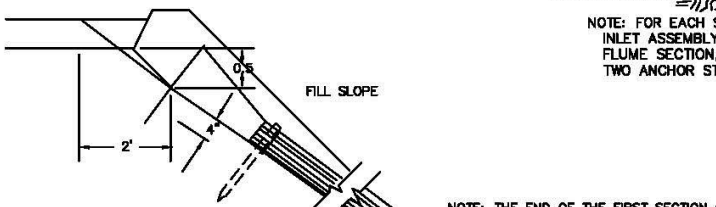

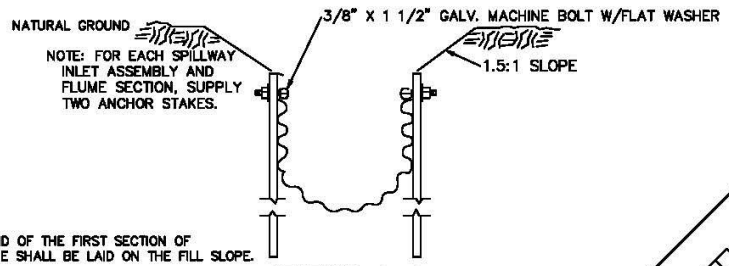

SECTION A–A

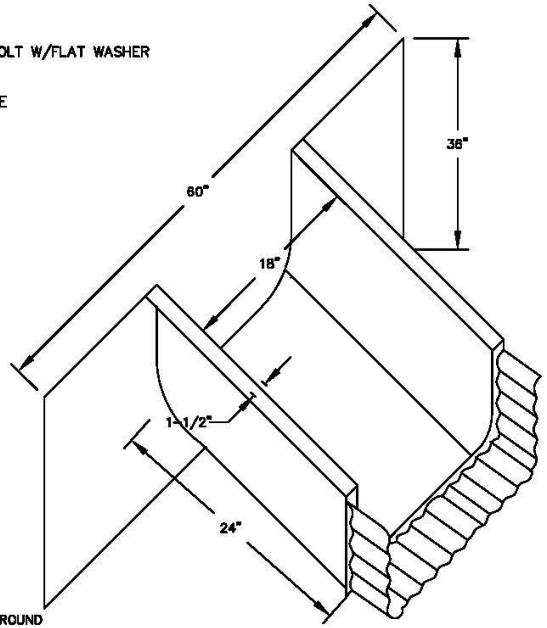

SPILLWAY INLET ASSEMBLY
CLEVELAND HALF–ROUND

NOTE: THE END OF THE FIRST SECTION OF FLUME SHALL BE LAID ON THE FILL SLOPE.

SECTION B–B

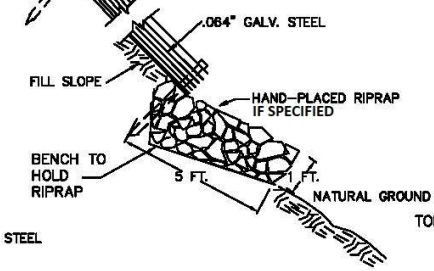

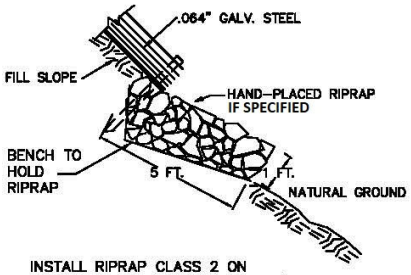

INSTALL RIPRAP CLASS 2 ON OVERSIDE DRAINS (APPROX 1 C.Y.)

RIPRAP INSTALLATION
IF SPECIFIED IN ESTIMATE

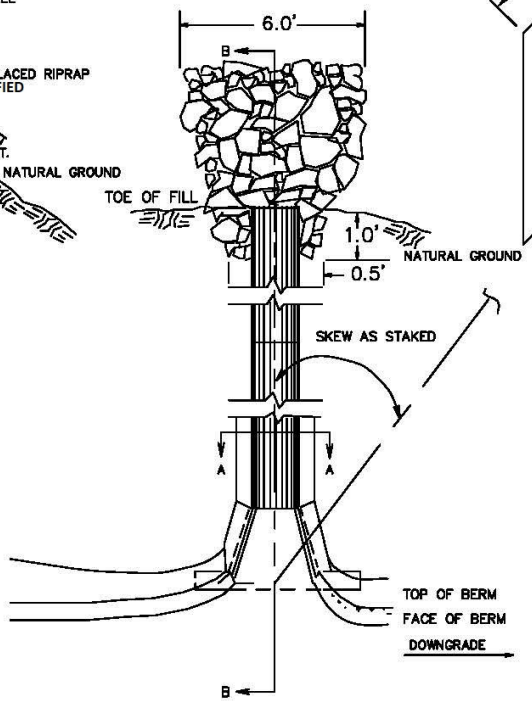

NOTE: CLEARING FOR SIA & FLUME SHALL BE 2 FT. MINIMUM, TO EACH SIDE OF STRUCTURE. CLEARING ABOVE STRUCTURE SHALL BE 4 FT. MINIMUM.

CLEAN SIA, WRITTEN ON DRAWINGS INCLUDES FLUME.

NOTE: ANCHOR STAKE ALLOWANCE INCLUDES 1 GALV. MACHINE BOLT W/NUT AND FLAT WASHER. SOME EXISTING SPILLWAY INLETS & FLUMES ARE 1/2 ROUND TYPE.

ANCHOR STAKES
4FT-6 FT LONG HEAVY DUTY STEEL GREEN PAINTED T-POST.
3/8"X1-1/2" GALV. MACHINE BOLT W/NUT AND FLAT WASHER.

U.S. DEPARTMENT OF AGRICULTURE
FOREST SERVICE — REGION FIVE
NATIONAL FOREST

CONSTRUCTION DETAILS

OVERSIDE DRAIN INSTALLATION

ACTUAL OVERSIDE DRAIN TYPE MAY VARY

SCALE: NONE
DWR. NO. 840-2 | SHEET 2 OF 2