FOR INFORMATION ONLY

THE JAMES LEFFEL & CO.

Manufactures of

HYDRAULIC TURBINES

1978 Commerce Circle—Springfield, Ohio USA 45504-2012

Phone (937) 322-0116 Telefax (937) 322-0467

OPERATION and MAINTNANCE MANUAL

for

JOHN DAY DAM SOUTH FISH TURBINE- UNIT 3

JOHN DAY DAM

RUFUS, OREGON

CONTRACT: W9127N-10-C-0029

US ARMY CORPS OF ENGINEERS,

PORTLAND DISTRICT, PORTLAND, OREGON

LEFFEL UNIT W3036-3

REFURBISHMENT PROJECT R-120627

THE JAMES LEFFEL & CO.

Manufactures of

HYDRAULIC TURBINES

1978 Commerce Circle—Springfield, Ohio USA 45504-2012

Phone (937) 322-0116 Telefax (937) 322-0467

MAIN CONTENTS

Section 1 Description of Refurbishment

Section 2 Operation

Section 3 Maintenance

Section 4 Paint and Coating Products

Section 5 Parts Catalog

Section 6 Spare Parts List

Section 7 Refurbishment Drawings

Section 8 Re-installation Data

Section 9 Original O&M Manuals

Section 10 Operator Notes

THE JAMES LEFFEL & CO.

Manufactures of

HYDRAULIC TURBINES

1978 Commerce Circle—Springfield, Ohio USA 45504-2012

Phone (937) 322-0116 Telefax (937) 322-0467

SECTION 1

THE JAMES LEFFEL & CO.

Manufactures of

HYDRAULIC TURBINES

1978 Commerce Circle—Springfield, Ohio USA 45504-2012

Phone (937) 322-0116 Telefax (937) 322-0467

SECTION 1

OUTLINE DESCRIPTION of REFURBISHMENT

TURBINE

The Leffel turbine was refurbished according to this contract W9127N-10-C-0029 including the incorporation into the turbine of new rough and pre-machined parts originally provided by The James Leffel & Co. under 2002 contract DACW57-02-P-0050, a few newly manufactured and procured components under this contract, and additional work brought on by as-found conditions.

In general, the turbine refurbishment included replacement of all wear and rotating parts to include runner, shaft, wicket gates, links, and linkage pins. The bottom ring was replaced new in stainless, the head cover was fitted with a stainless facing plate and bronze thrust plate, the spiral case was true-up machined on working surfaces, and a new packing box was provided. The pivot junctions in the wicket gate operating mechanism was converted to a grease-free design with the old grease lube system abandoned.

All existing components refurbished for re-use were first cleaned and inspected per the specification and to the extent required to assure the components were acceptable for the planned refurbishment.

All carbon steel, ductile iron, and cast iron components were prepared and painted in accordance to spec section 09 97 02.00 26 with MIL-DTL-24441D, Type III Expoxy Polymide. The paint manufacture was Sherwin Williams and product data is provided later in this manual.

Outside of converting the gate mechanism lube system to a "greaseless" system, the refurbishment did not change the operation of the turbine.

PUMP

The pump was refurbished according to modifications to the contract including the incorporation into the pump new rough machined parts provided by the government, a few newly manufactured and procured components under this contract, and additional work brought on by as-found conditions.

In general, the pump refurbishment included replacement of the lower pump shaft, true-up machining of the upper pump shaft, true-up machining of the upper and lower bearing mounting flanges and spigot bores on the cover plate and diffuser, and true-up machining of the diffuser extension cone. The propeller itself had its blade tips built up with weld and re-machined a proper clearance (nominally 1/8" radial clearance) to the pit liner. In addition the propeller center bores were true-up machined for proper fit (0.004-0.006" clearance) to the new lower shaft. The upper and lower bearings were fitted with greaseless bearing liners and the shafts existing stainless bearing journals were replaced with spares provided by the government that were originally supplied by Worthington Pump.

All existing components refurbished for re-use were first cleaned and inspected per the specification and to the extent required to assure the components were acceptable for the planned refurbishment.

All carbon steel components were prepared and coated in accordance to spec section 48 13 13.12 26 with Enecon CL + AC coating. The Enecon CL + AC product data is provided later in this manual.

The refurbishment did not change the operation of the pump.

REFURBISHMENT DRAWINGS

The refurbishment drawing section of this O&M lists the refurbishment drawings for both the turbine and pump. These drawings provide a thorough representation of the refurbishment work of which reduced copies are included in the refurbishment drawings section. **It should be noted these drawings generally only address the refurbishment work, therefore the original drawings should be consulted as need for further clarification and information.**

THE JAMES LEFFEL & CO.

Manufactures of

HYDRAULIC TURBINES

1978 Commerce Circle—Springfield, Ohio USA 45504-2012

Phone (937) 322-0116 Telefax (937) 322-0467

SECTION 2

THE JAMES LEFFEL & CO.
Manufactures of
HYDRAULIC TURBINES
1978 Commerce Circle—Springfield, Ohio USA 45504-2012
Phone (937) 322-0116 Telefax (937) 322-0467

SECTION 2

OPERATION

As the work performed under this refurbishment contract did not alter or add to the original operation of the turbine or pump, refer to the "Original O&M" section of this manual for operating information in the original turbine O & M and original pump O & M.

Areas in the manuals dealing with grease lubrication can be ignored and have been crossed out in the original O & M's.

THE JAMES LEFFEL & CO.

Manufactures of

HYDRAULIC TURBINES

1978 Commerce Circle—Springfield, Ohio USA 45504-2012

Phone (937) 322-0116 Telefax (937) 322-0467

SECTION 3

THE JAMES LEFFEL & CO.

Manufactures of

HYDRAULIC TURBINES

1978 Commerce Circle—Springfield, Ohio USA 45504-2012

Phone (937) 322-0116 Telefax (937) 322-0467

SECTION 3

MAINTENANCE

TURBINE MAINTENANCE and CONTROL

To keep a Francis turbine and related equipment in satisfactory function, a certain amount of maintenance and inspection must be regularly performed.

Continuous condition control and monitoring are of great importance. This will provide opportunities to take action at an early stage and thereby limit the extent of possible damage to a minimum. Changes in sound characteristics during unit operation may indicate developing malfunctions.

A maintenance plan should be established as per the outline provided on the following page.

MAINTENANCE SCHEDULE
FRANCIS TURBINE

	FREQUENCY			
ACTIVITY	**1 month**	**6 months**	**1 yr**	**2 yrs**
I TURBINE AND PUMP				
- Routine Inspection	**X**			
- RPM Shutdown Curve			**X**	
- Wicket Gate Leakage Check			**X**	
- Shaft Run Out		**X**		
II ROTATING PARTS				
- Runner			**X**	
III WATER CHANNELS				
- Spiral Casing			**X**	
- Draft Tube				**X**
IV WICKET GATE MECHANISM				
- Upper and Lower Cover Guide Surfaces				**X**
- Wicket Gates			**X**	
- Wicket Gate Bearings	**X**			
- Wicket Gate Stems, Arms, Links		**X**		
- Gate Operating Ring		**X**		
V SEAL RINGS				**X**
VI SHAFT MAIN SEAL		**X**		
VII BEARINGS			**X**	

I TURBINE and PUMP

Routine Inspection

Visual inspect the complete turbine and pump. Look for possible leakages and inspect bolted connections. Drain pumps, if any, from upper cover should be inspected and level switches should be tested.

RPM Shutdown Curve

The RPM shutdown curve should be drawn from nominal RPM to standstill. The RPM should be recorded with a selected equal-time intervals from the time of wicket gates closing to standstill of the unit. Record the instance of turbine shut-off valve is in closed position. Comparison to previous tests should be made and studied to alert of possible issues

Leakage Control, Wicket Gates

Record the RPM (if any) with the turbine with shut-off valve open and the wicket gates closed. Increased RPM indicate more leakage caused by a wicket gate(s) out of position due to slippage, damage, or foreign object.

Unit rotation in this condition might be created by one or more of the following:

- -foreign object wedged between two gates when the wickets gates are closed
- -improper squeeze on wicket gates due to wear, damage, or looseness in the linkages (Design squeeze is 1/16")
- -broken component in the wicket gate linkage
- -in proper operation or bleed-off of the wicket gate operator cylinder
- -wear of the surfaces of head and bottom cover opposite the ends of the wicket gates
- -erosion of the wicket gates end faces

Shaft Run-Out

Record the shaft run-out by means of dial indicator instrument against the shaft at the exposed area between the turbine/gearbox and between the gearbox/pump. Record the run out at different loads on the unit. The run out experienced during commissioning at steady load will be used for comparing the TIR value. In the event this is increased to above 4/1000” at all times of steady load, this condition should be investigated. Conditions that might impact this, uneven wear of the seal rings or an object caught in the runner.

II ROTATING PARTS

Runner and Propeller

Visual inspection of the runner and propeller is required in order to record possible cavitation and erosion damages as well as cracks in buckets near hub and/or band. At inlet and particularly at discharge edges of buckets, dye penetrant inspection should be performed. Any cracking, wear, cavitation or erosion should be recorded.

Any suspect findings in the above inspections should give cause for further investigation and possible corrective actions.

III WATER CHANNELS

Inspection of the water channels, including inlet pieces, spiral casing draft tube, and pump pit should look for abnormities, foreign objects, paint and coat degradation, and erosion/cavitation.

For painted surfaces in general, possible wear to the paint should be cleaned and the area repainted as part of the annual maintenance.

IV WICKET GATE MECHANISM

Upper and Lower Covers, Guide Surfaces

A portion of the guide surfaces can be inspected from the spiral casing. Possible wear should be recorded for later comparison. A more thorough inspection of the guide surfaces can be made with open wicket gates.

CAUTION!

The wicket gate operator should be disconnected or locked out during any inspection through or between the wicket gates.

This inspection is to determine possible wear from sand or other suspended matter. Possible waviness can be measured with a straight edge and a set of feeler gauges.

Wicket Gates

Visual inspection of surfaces. This inspection should look for abnormities including blow marks from foreign objects on the inside (runner side) of the wicket gates,.

The front-rear/heal-toe clearances between the wicket gates and head cover and bottom ring should be checked using feeler gauges.

The gap between wicket gates at squeeze gate (gate closure) should be checked using feeler gauges.

CAUTION!

The wicket gate operator should be disconnected or locked out during the above inspections.

The results of the above checks should be compared to the re-commissioning measurements and retained as comparison of future checks.

Any suspect findings in the above inspections should give cause for further investigation and possible corrective actions.

Wicket Gate Bushings and Packing

There are three wicket gate bushings. The outer one is located in the wicket gate stem support housing, the middle one is located in the head cover, and the lower (or rear) is located in the bottom ring. Wear can be checked for visually, by feeler gauges, and/or by checking shake.

Wicket gate packing is made up of braided packing three rings and a bronze packing gland. Gland should be adjusted (tightened or loosened) as need to allow a minor amount of leakage.

Any suspect findings in the above inspections should give cause for further investigation and possible corrective actions.

Wicket Gate Levers, Links, Pins

Check connections between wicket gate stems, arms, links and pins for abnormal operation, slop, or lack of movement.

CAUTION!

DO NOT insert hands into this mechanism when operating as this can cause severe bodily injury.

Observe operation and use extra lighting for closer scrutiny.

Gate Operating Ring, Connecting Rods, and Rocker Arm

Check the connection between the gate operating ring and connecting rods/gate links, between the connecting rods and rocker arm, and between the rocker arm and operator lever arm and operator linkages.

Pay special attention to the pins, retaining clips, and nuts.

Inspect the wicket gate mechanism pre-stressing (squeeze). Again, this should be in the 1/16" range.

V RUNNER SEAL RINGS

Front and Rear Seal Rings

The unit is provided with bronze static seal rings at the runner crown and runner band. The design radial clearance at both locations is 0.020" Wear can be assessed by measurement of the clearance between the runner and stationary seal rings.

Additional the position of the runner between the covers can be checks. The design here is that the runner crown and bottom plate is set inside the seals 1/16".

This check should be carried out as given in the inspection schedule. Increased clearance or mis-position will cause loss of water; therefore, this should be weighed against replacement cost.

Access is made from spiral case side with the wicket gates fully open.

CAUTION!

The wicket gate operator should be disconnected or locked out during the above inspections.

VIII BEARINGS

Turbine Bearings

There are two turbine bearings. The bearing closest to the turbine is a combined radial/thrust bearing, known as the Inboard Bearing [I.B.] The other bearing is a radial bearing, known as the Outboard Bearing [O.B.]

Both bearings are babbitt-oil lubricated-water cooled type.

Inboard Bearing

The I.B. lubrication is provided by the a pump with the oil being circulated through an through an oil cooler. Reference original drawing 50712 for Water Piping and drawing 51701 for Oil Piping.

The I.B. includes a Kingsbury adjustable shoe 6-seqment thrust bearing. Reference Kingsbury drawing 27-13-1/2-13E of which a copy is provided at the end of this section. manual.

Clearances:

Radial:	0.008/0.010" diametrically
Thrust:	0.02" total laterally

Outboard Bearing

The O.B. lubrication is provided by oil rings bring oil up on the shaft and bearing by oil rings from a reservoir inside the bearing housing. The bearing is cooled by water following through a water jacket in the lower portion of the housing. Reference original drawing 50712 for Water Piping.

Additional references:

For additional maintenance information reference the following:

-Original Leffel Turbine O&M (See Original O & M Section of this manual)
-Original Worthington Pump O&M (See Original O & M Section of this manual)
-Original Leffel drawing 50604 (Inboard Bearing)
-Original Leffel drawing 50580 (Outboard Bearing

PART NO.	REQ. FOR ONE BRG.	NAME
1	12	SHOE (BABBITT FACED)
2	12	SHOE SUPPORT (IN SHOE)
3	2	BASE RING (IN HALVES)
4	2	BASE RING KEY
5	2	BASE RING KEY SCREW
6	12	UPPER LEVELING PLATE
7	12	LOWER LEVELING PLATE
8	12	LEVELING PLATE SET SCREW
9	12	LEVELING PLATE DOWEL

NOTE:- PROVIDE ABOUT .018" FOR TOTAL END PLAY.

COLLAR FACES MUST BE FLAT AND SQUARE WITH SHAFT AXIS. FINISH VERY SMOOTH (16 RMS) BY LAPPING OR OTHERWISE

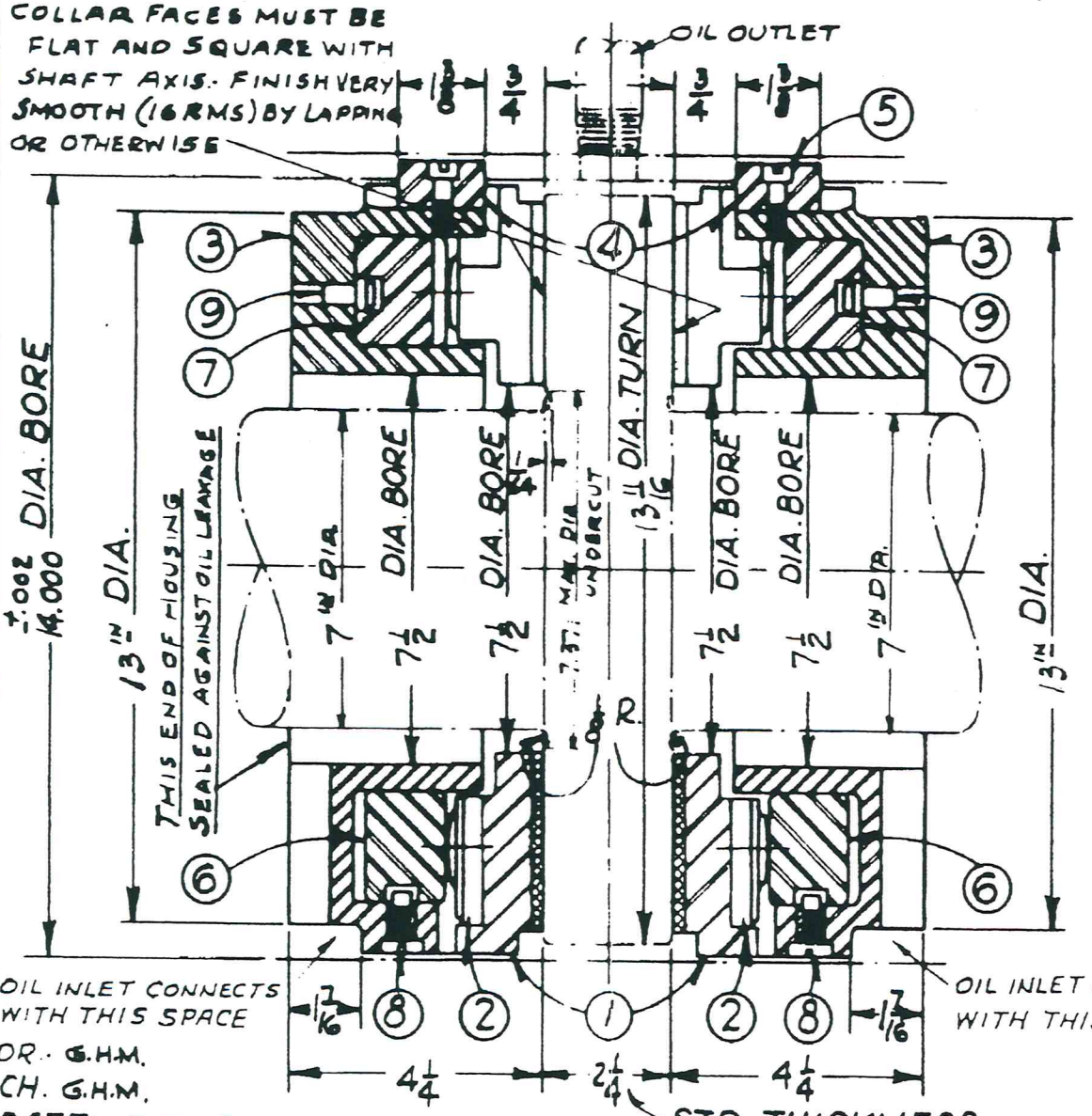

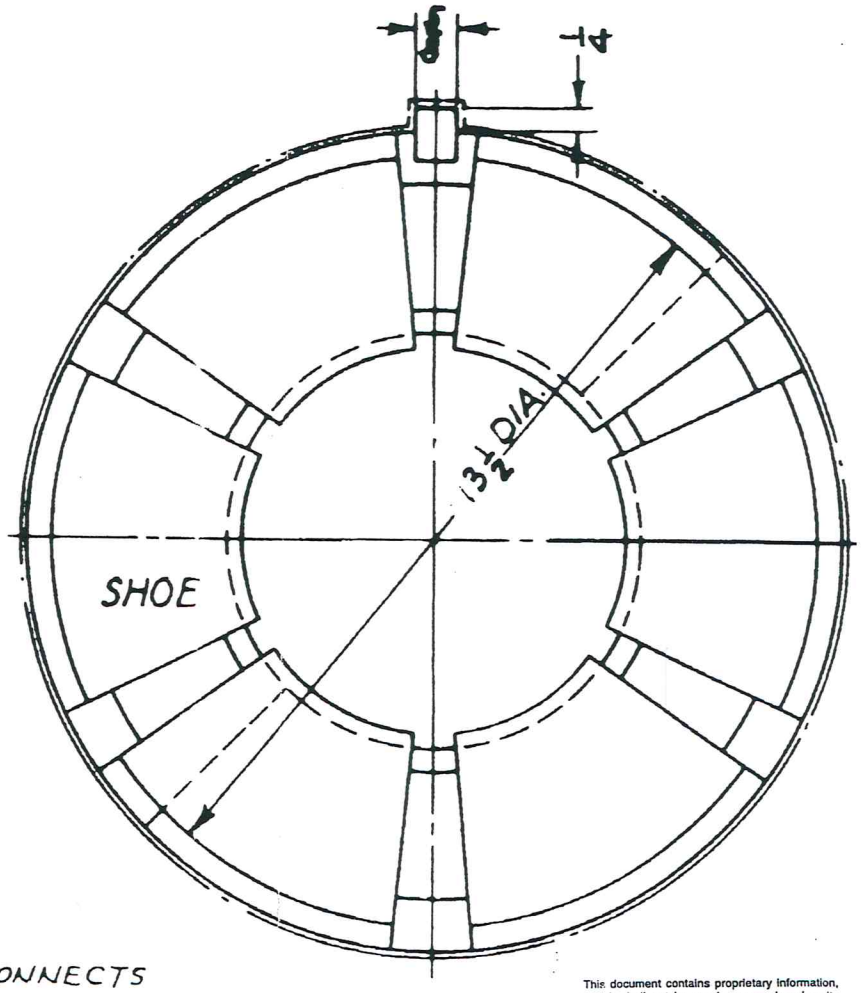

This document contains proprietary information, and it shall not be used or reproduced or its contents disclosed, in whole or in part, without the prior written consent of The James Leffel & Co.

DR. G.H.M.
CH. G.H.M.
DATE:- 2-17-65

JJ-13½ BEARING

SPEC. BORE SHOES AND BASE RINGS

PART LIST AND DIMENSIONS

KINGSBURY MACHINE WORKS, INC. PHILADELPHIA, PA.

No. 27-13½-13E

THE JAMES LEFFEL & CO.

Manufactures of

HYDRAULIC TURBINES

1978 Commerce Circle—Springfield, Ohio USA 45504-2012

Phone (937) 322-0116 Telefax (937) 322-0467

SECTION 4

THE JAMES LEFFEL & CO.

Manufactures of

HYDRAULIC TURBINES

1978 Commerce Circle—Springfield, Ohio USA 45504-2012

Phone (937) 322-0116 Telefax (937) 322-0467

SECTION 4

PAINTING and COATING PRODUCTS

The turbine and pump was painted per their respective specifications s noted in "Description of Refurbishment" section. Following are the products used for painting and coating:

Turbine Paint	
Sherwin Williams N10-30 Series	2 pages
Pump Coating	
Enecon CeramAlloy CL + AC	2 pages

Protective & Marine Coatings

MIL-DTL-24441D, TYPE III
EPOXY POLYAMIDE

N10-350 Series

Revised 7/10

Product Information

9.32

Product Description

MIL-24441, Type III is a low VOC epoxy polyamide system, formulated for immersion service and to protect surfaces from environmental attack. For use where air pollution regulations for marine coatings are restricted to a maximum of 340 g/L or 2.8 lb/gal.

Product Characteristics

Finish: Low sheen

Colors:
Primer: 150 Green
Finishes: 151 Haze Gray, 152 White, 153 Dark Gray, 154 Dark Gray, 155 Dark Gray, 156 Matte Red

Volume Solids:
Primer:
Formula 150 Green 59.2 ± 1%
Finish:
Formula 151 Haze Gray 58.6 ± 1%
Formula 152 White 58.1 ± 1%
Formula 153 Dark Gray Ro 1.8 58.5 ± 1%
Formula 154 Dark Gray Ro 3.6 58.4 ± 1%
Formula 155 Dark Gray Ro 6 58.4 ± 1%
Formula 156 Matte Red 61.0 ± 1%

VOC (EPA Method 24): <340 g/l; 2.8 lb/gal, maximum, mixed

Mix Ratio: 1:1 by volume

Recommended Spreading Rate per coat:

	Primer Min.	Primer Max.	Topcoats Min.	Topcoats Max.
Wet mils (microns)	**5.0** 125	**6.0** 150	**3.5** 88	**5.0** 125
Dry mils (microns)	**3.0** 75	**4.0** 100	**2.0** 50	**3.0** 75
~Coverage sq ft/gal (m^2/L)	**236** 5.8	**315** 7.7	**310** 7.6	**464** 11.4
Theoretical coverage **sq ft/gal** (m^2/L) @ 1 mil/25 micron dft	**928** (22.7)			

NOTE: Brush or roll application may require multiple coats to achieve maximum film thickness and uniformity of appearance.

Drying Schedule @ 5.0 mils wet (125 microns):

	35-40°F (1.6-4.5°C)	41-60°F (4.5-16°C)	61-80°F (16-27°C) *50% RH*	81-100°F (27-38°C)
Dry to touch:	12 hours	8 hours	6 hours	4 hours
To recoat:				
minimum (epoxy):	24 hours	18 hours	12 hours	8 hours
minimum (non-epoxy)*:	12 hours	8 hours	6 hours	4 hours
maximum:	14 days	12 days	10 days	7 days
Cure to service:	6 days	5 days	4 days	64 hours

*An anti-foulant topcoat must be applied before the previous epoxy topcoat has hardened and while the epoxy is in a slightly tacky condition. This overcoat period is mainly dependent on the existing environmental conditions. If the epoxy is not tacky, an additional coat of epoxy must be applied to provide the required tacky condition.

Pot Life: 5 hours at 77°F/25°C, 50% RH

Sweat-in-Time: @ 35-60°F (1.6-16°C): 2 hours
@ 61-70°F (16-21°C): 1-1.5 hours
@ 71-90°F (21-32°C): 30 minutes - 1 hour
@ >90°F (>32°C): none

Product Characteristics (Cont'd)

Shelf Life: 36 months, unopened
Store indoors at 40°F (4.5°C) to 100°F (38°C)

Flash Point: 100°F (38°C), PMCC, mixed

Reducer/Clean Up: Reducer #130, R7K130

Recommended Uses

For use over prepared substrates such as steel and aluminum in industrial and marine environments where a hard, durable, chemical resistant coating is desired.
- Marine vessels: bilges, tanks, and underwater hulls
- Off shore platforms

For use where air pollution regulations for marine coatings are restricted to a maximum of 340 g/L or 2.8 lb/gal.

Performance Characteristics

Complies with Military Specification MIL-DTL-24441, Type III and is listed on NAVSEA QPL-24441

Color	Product/Rex Number
Primer:	
Green - 150, Part A	N10G350
Hardener for Primer 150, Part B	N10V350
Finishes:	
Haze Gray - 151, Part A	N10A351
White - 152, Part A	N10W352
Dark Gray - Ro 1.8 153, Part A	N10A353
Dark Gray - Ro 3.6 154, Part A	N10A354
Dark Gray Ro 6 155, Part A	N10A355
Hardener for 151-155, Part B	N10V351
Red - 156, Part A	N10R356
Hardener for 156, Part B	N10V356

continued on back

Protective & Marine Coatings

MIL-DTL-24441D, TYPE III
EPOXY POLYAMIDE

N10-350 SERIES

PRODUCT INFORMATION

9.32

RECOMMENDED SYSTEMS

		Dry Film Thickness / ct. Mils	(Microns)
Steel:			
1 ct.	MIL-24441, Type III Primer	3.0-4.0	(75-100)
2 cts.	MIL-24441, Type III Epoxy	2.0-3.0	(50-75)
Steel, non-immersion (exterior):			
1 ct.	MIL-24441, Type III Epoxy	3.0-4.0	(75-100)
2 cts.	MIL-PRF-24635	1.5-2.5	(40-63)
Steel:			
1 ct.	MIL-24441, Type III Primer (Formula 150 only)	2.0-4.0	(50-100)
1 ct.	MIL-24441, Type III (No. 156)	2.0-4.0	(50-100)
1 ct.	MIL-24441, Type III (No. 152)	2.0-4.0	(50-100)
Total system to be 8.0 mils (200 microns) minimum, 12.0 mils (300 microns) maximum.			
Aluminum:			
1 ct.	MIL-24441, Type III Primer (Formula 150 only)	3.0-4.0	(75-100)
2 cts.	MIL-24441, Type III Epoxy	2.0-3.0	(50-75)

The systems listed above are representative of the product's use, other systems may be appropriate.

SURFACE PREPARATION

Surface must be clean, dry, and in sound condition. Remove all oil, dust, grease, dirt, loose rust, and other foreign material to ensure adequate adhesion.

Refer to product Application Bulletin for detailed surface preparation information.

Minimum recommended surface preparation:

Iron & Steel
- Atmospheric: SSPC-SP6/NACE 3, 2.0 mil (50 micron) profile
- Immersion: SSPC-SP10/NACE 2, 1.0-3.0 mil (25-75 micron) profile

Aluminum: SSPC-SP7 or Power Wire Brush

Surface Preparation Standards

	Condition of Surface	ISO 8501-1 BS7079:A1	Swedish Std. SIS055900	SSPC	NACE
White Metal		Sa 3	Sa 3	SP 5	1
Near White Metal		Sa 2.5	Sa 2.5	SP 10	2
Commercial Blast		Sa 2	Sa 2	SP 6	3
Brush-Off Blast		Sa 1	Sa 1	SP 7	4
Hand Tool Cleaning	Rusted	C St 2	C St 2	SP 2	-
	Pitted & Rusted	D St 2	D St 2	SP 2	-
Power Tool Cleaning	Rusted	C St 3	C St 3	SP 3	-
	Pitted & Rusted	D St 3	D St 3	SP 3	-

TINTING

Do not tint.

APPLICATION CONDITIONS

Temperature:
- air and surface: 35°F (1.6°C) minimum, 100°F (38°C) maximum
- material: 60°F (16°C) minimum
  At least 5°F (2.8°C) above dew point

Relative humidity: 85% maximum

Refer to product Application Bulletin for detailed application information.

ORDERING INFORMATION

Packaging: 1 gallon (3.78L) and 5 gallon (18.9L) containers

~Weight: ~10.3 - 11.5 ± 0.2 lb/gal ; 1.2 - 1.4 Kg/L mixed, depending on color

SAFETY PRECAUTIONS

Refer to the MSDS sheet before use.

Published technical data and instructions are subject to change without notice. Contact your Sherwin-Williams representative for additional technical data and instructions.

WARRANTY

The Sherwin-Williams Company warrants our products to be free of manufacturing defects in accord with applicable Sherwin-Williams quality control procedures. Liability for products proven defective, if any, is limited to replacement of the defective product or the refund of the purchase price paid for the defective product as determined by Sherwin-Williams. NO OTHER WARRANTY OR GUARANTEE OF ANY KIND IS MADE BY SHERWIN-WILLIAMS, EXPRESSED OR IMPLIED, STATUTORY, BY OPERATION OF LAW OR OTHERWISE, INCLUDING MERCHANTABILITY AND FITNESS FOR A PARTICULAR PURPOSE.

DISCLAIMER

The information and recommendations set forth in this Product Data Sheet are based upon tests conducted by or on behalf of The Sherwin-Williams Company. Such information and recommendations set forth herein are subject to change and pertain to the product offered at the time of publication. Consult your Sherwin-Williams representative to obtain the most recent Product Data Information and Application Bulletin.

Revolutionary products . . .

. . . for rebuilding, resurfacing and protecting all types of fluid flow machinery, equipment and structures.

METALCLAD

CeramAlloy™ CL+AC

(Advanced Composite)

Outstanding erosion/corrosion resistance!

Repairs Damaged Equipment — Protects New Components.

The Most Advanced Polymer Composite Coating System Available!

Apply by Brush, Roller or Flexible Applicator

Requires No Heat

Unlimited Shelf Life

100% Solids

Safe & Simple To Use

High Performance Polymer Composite for resurfacing and protecting all types of fluid flow equipment from aggressive erosion and corrosion damage.

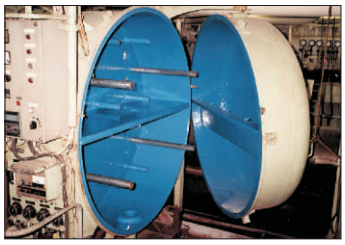

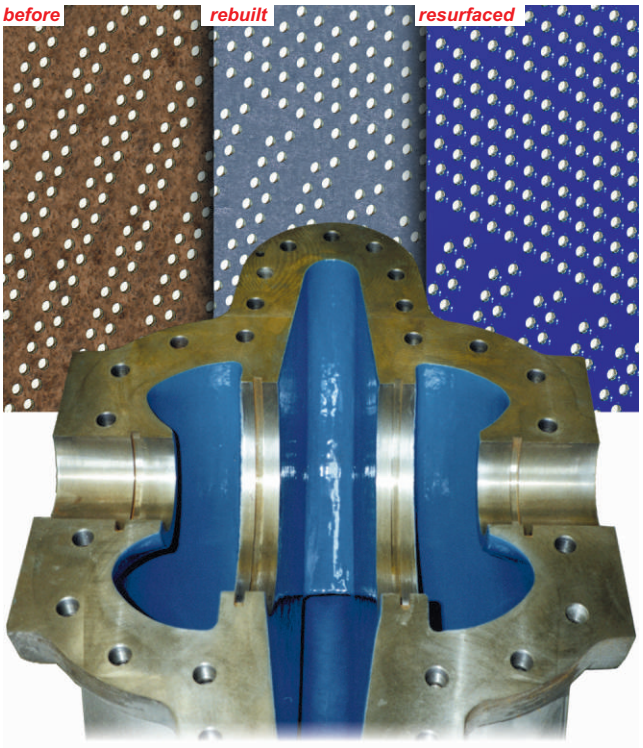

METALCLAD CeramAlloy™ CL+AC is a two component, 100% solids, liquid polymer composite used for repairing, resurfacing and coating components to provide outstanding fluid flow erosion and corrosion resistance.

When mixed, **METALCLAD CeramAlloy™ CL+AC** is a viscous liquid. CL+AC cures to a hard, ceramic-like material with an extremely smooth surface finish.

Heat Exchanger Tube Sheets & Water Boxes, Pumps, Valves & Pipework, Housings & Tanks, Cooling Towers, etc.

ENECON® Corporation
The Fluid Flow Systems Specialists.
www.enecon.com
Toll Free: 888-4-ENECON
Tel: 516 349 0022 · Fax: 516 349 5522
Email: info@enecon.com
6 Platinum Court · Medford, NY 11763-2251

METALCLAD CeramAlloy™ CL+AC

Technical Data

Volume capacity per kg.	36 in^3 / 592 cc
Mixed density	0.061 lbs per in^3 / 1.69 gm per cc
Coverage rate per kg. @ 12 - 15 mils	14 - 16 ft^2 / 1.4 m^2
Shelf life	Indefinite
Volume solids	100%

Mixing ratio	Base	Activator
By volume	3.3	1
By weight	6	1

Cure Times

Ambient Temperature		Working Life	Machining Light Load	Full Mechanical	Chemical Immersion
41°F	5°C	4 hrs	48 hrs	96 hrs	10 days
59°F	15°C	2 hrs	24 hrs	48 hrs	5 days
77°F	25°C	1 hr	12 hrs	24 hrs	3 days
86°F	30°C	40 min	8 hrs	20 hrs	2 days

Physical Properties

	Typical Values		Test Method
Compressive strength	13,500 psi	945 kg/cm^2	ASTM D-695
Flexural strength	8,000 psi	560 kg/cm^2	ASTM D-790
Izod impact strength	1.3 ft lbs/in	0.69 j/cm	ASTM D-256
Hardness - Shore D	85		ASTM D-2240
Tensile Shear Adhesion			
Steel	4000 psi	280 kg/cm^2	ASTM D-1002
Aluminum	2500 psi	175 kg/cm^2	ASTM D-1002
Copper	3000 psi	210 kg/cm^2	ASTM D-1002
Stainless steel	4100 psi	287 kg/cm^2	ASTM D-1002
Surface resistivity	1 x 10^{15} ohms		ASTM D-257
Volume resistivity	1 x 10^{15} ohm/cm		ASTM D-257
Dielectric constant	7.5		ASTM D-150
Dielectric strength	652 volts/mil		ASTM D-115
Breakdown voltage	6.1 Kv		ASTM D-115

Chemical Resistance

Acetic acid (0-10%)	EX	Methyl alcohol	G
Acetic acid (10-20%)	G	Methyl ethyl ketone	G
Acetone	G	Nitric acid (0-10%)	EX
Aviation fuel	EX	Nitric acid (10-20%)	G
Butyl alcohol	EX	Phosphoric acid (0-5%)	EX
Calcium chloride	EX	Phosphoric acid (5-10%)	G
Crude oil	EX	Potassium chloride	EX
Diesel fuel	EX	Propyl alcohol	EX
Ethyl alcohol	G	Sodium chloride	EX
Gasoline	EX	Sodium hydroxide	EX
Heptane	EX	Sulfuric acid (0-10%)	EX
Hydrochloric acid (0-10%)	EX	Sulfuric acid (10-20%)	G
Hydrochloric acid (10-20%)	G	Toluene	G
Kerosene	EX	Xylene	EX

EX - Suitable for most applications including immersion.
G - Suitable for intermittent contact, splashes, etc.

Your Local ENECON® Fluid Flow Systems Specialist

Printed in the USA
February, 2010

Using CeramAlloy™ CL+AC

Surface Preparation - METALCLAD CeramAlloy™ CL+AC should be applied only to clean, dry and well roughened surfaces.

1. Remove all loose material and surface contamination and clean with a suitable solvent which leaves no residue on the surface after evaporation such as acetone, MEK, isopropyl alcohol, etc.
2. Clean/roughen surface by abrasive blasting.
3. If necessary, apply moderate heat and/or allow the component(s) to 'leach' to remove ingrained contaminants.
4. Thoroughly roughen surfaces by abrasive blasting to achieve a 'white metal' degree of cleanliness and an anchor pattern of 3 mils.

Please note: In situations where adhesion is not desired, such as when making molds and patterns or to ease future disassembly, apply a suitable release agent (mold release compound, paste wax, etc.) to the appropriate surfaces.

Mixing & Application - For your convenience, the METALCLAD CeramAlloy™ CL+AC Base and Activator have been supplied in precisely measured quantities. Simply pour the entire contents of the Activator container into the Base container and, using a spatula, putty knife or other appropriate tool, mix thoroughly until the CeramAlloy™ CL+AC reaches a uniform, streak-free color. Apply the mixed material to the prepared surface using a stiff-bristled brush, applicator or roller. As a guide, an even thickness of approximately 12-15 mils per coat should be obtained. A minimum two coat application is required. Overcoating should ideally be performed when the previously applied coat is just surface tacky; and certainly within 8 hours of the previous coat.

Health & Safety - Every effort is made to insure that ENECON® products are as simple and safe to use as possible. Normal industry standards and practices for housekeeping, cleanliness and personal protection should be observed.

Please refer to the detailed MATERIAL SAFETY DATA SHEETS (MSDS) supplied with the material (also available on request) for more information.

Cleaning Equipment - Wipe excess material from tools immediately. Use acetone, MEK, isopropyl alcohol or similar solvent as needed.

Technical Support - The ENECON® engineering team is always available to provide technical support and assistance. For guidance on difficult application procedures or for answers to simple questions, call your local ENECON® Fluid Flow Systems Specialist or the ENECON® Engineering Center.

All information contained herein is based on long term testing in our laboratories as well as practical field experience and is believed to be reliable and accurate. No condition or warranty is given covering the results from use of our products in any particular case, whether the purpose is disclosed or not, and we cannot accept liability if the desired results are not obtained.

Copyright © 2010 by ENECON® Corporation. All rights reserved. No part of this work may be reproduced or used in any form or by any means - graphic, electronic or mechanical including photocopying, recording, taping or information storage and retrieval systems - without written permission of ENECON® Corporation.

THE JAMES LEFFEL & CO.

Manufactures of

HYDRAULIC TURBINES

1978 Commerce Circle—Springfield, Ohio USA 45504-2012

Phone (937) 322-0116 Telefax (937) 322-0467

SECTION 5

THE JAMES LEFFEL & CO.

Manufactures of

HYDRAULIC TURBINES

1978 Commerce Circle—Springfield, Ohio USA 45504-2012

Phone (937) 322-0116 Telefax (937) 322-0467

SECTION 5

PARTS CATALOG

The following catalog data is provided:

Turbine Inboard Bearing Oil Cooler
Tate Andale Oil Cooler B-2 Type 202..... 6 pages

Turbine Inboard Bearing Oil Pump
Roper 17F5 SPEC 0 Pump..... 3 pages

Turbine Inboard Bearing Oil Pump Motor
Baldor-Reliance CL3504 Motor..... 10 pages

Greaseless Bearings
Trelleborg (Orkot) Engineering Manual..... 28 pages

Tate Andale

Type 202 Oil Coolers

for maximum heat removing performance and efficiency

The Tate Andale Type 202 Oil Cooler is a superior unit providing optimum oil cooling capability and economy plus maximum ease of maintenance. These unique oil coolers enable the tube bundle to be easily removed for servicing without breaking any of the piping connections.

Availability of a full range of body sizes and baffle arrangements assures you of the ideal oil cooler for your specific requirements. Further details on Tate Andale Type 202 Oil Coolers are given on the reverse side. We welcome your most critical evaluation of these performance-proven coolers.

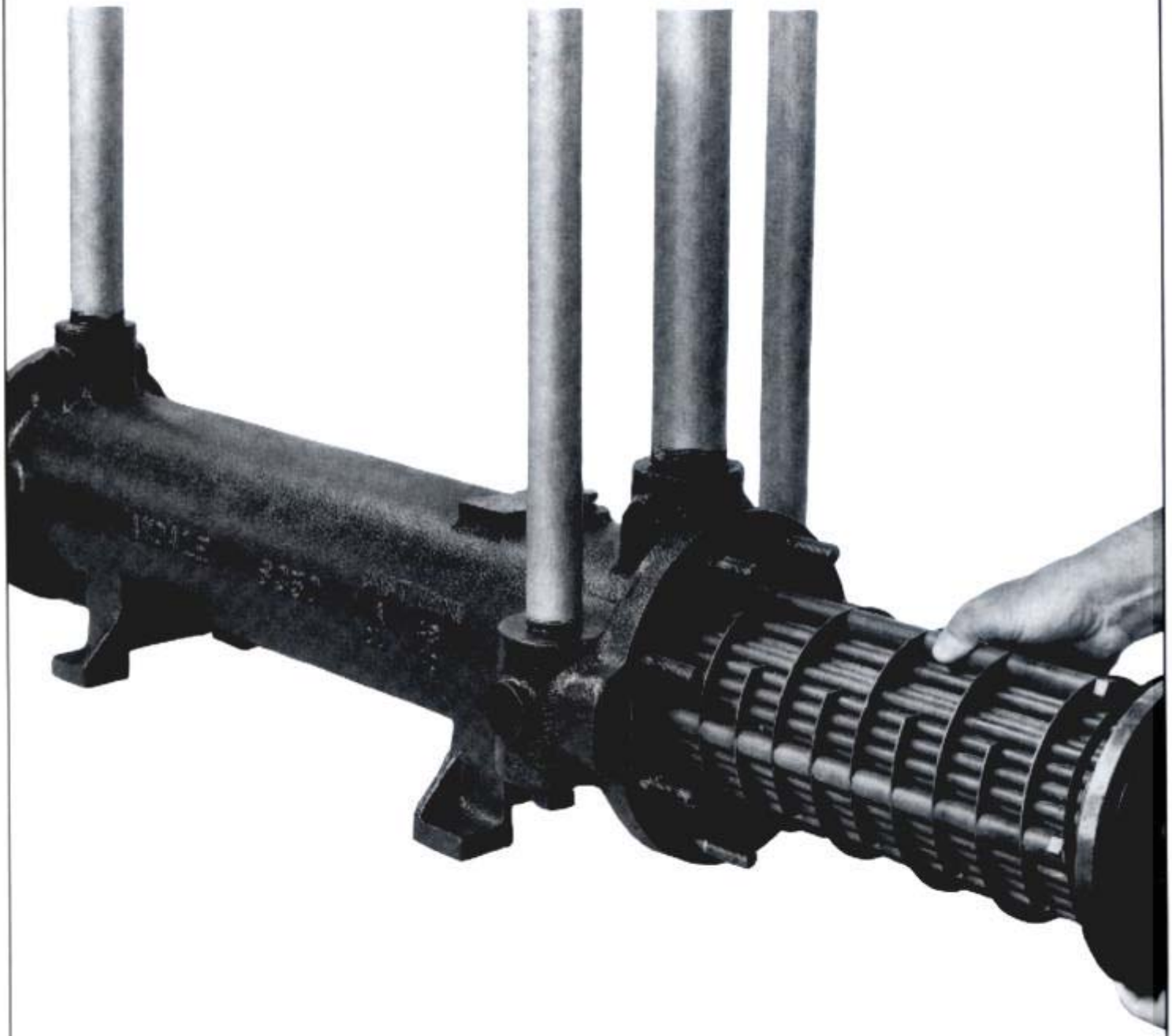

B-25003140 Tate Andale Oil Cooler
B-2 Type 202

For maximum oil cooling efficiency at pressures to 125 psig and fluid temperatures to 200°F., Tate Andale offers a complete range of Type 202 Oil Coolers. These rugged units feature Tate Andale's exceptional cooler design which permits the tube bundle to be removed for servicing while all piping connections—both water and oil—remain intact. This unique feature assures ease of maintenance without lengthy downtime. In addition, Tate Andale Type 202 Oil Coolers can be inspected for leakage without disassembling the unit since all gasketed or packed joints are visible.

The water normally flows through the tubes and the oil flows through the shell (around the tubes) with the baffles directing the oil back and forth across the tubes.The baffle spacing is carefully selected to assure optimum oil velocity for efficient heat transfer.

Superior Design and Construction

The Type 202 Oil Cooler has an externally packed floating tube sheet with synthetic rubber "O" rings held in the counterbore of the shell by a stud bolted adjustable gland. The "O" rings seal the clearance between the shell and the floating tube sheet and permit the bundle assembly to expand and contract freely with changes in temperature and without any oil leakage. This design affords positive protection against intermixing of the oil and water through the packing. If packing leakage should occur, it will take place externally and not into the water.

These Tate Andale coolers have 3/8" O.D. x 18 BWG seamless, cold drawn tubes in a machined bundle. If desired, Type 202 units can be furnished with 5/8" O.D. tubing. The tube ends are expanded into carefully-machined aluminum bronze tube sheets and tested to 1½ times the working pressure to assure leakproof operation.

Every type 202 component is precision machined to assure years of troublefree performance and exact replaceability of parts if ever required.

A Selection of Materials

Highest quality materials to standard specifications are used throughout Type 202 Oil Coolers. Generally, these Tate Andale coolers feature cast iron pressure parts with bronze internal components. For example, a cooler using fresh water as the cooling medium employs cast iron shell and heads, copper tubes with aluminum bronze tube sheets and brass baffles. For salt or brackish water, tubes of admiralty metal or 90/10 copper-nickel are suggested. All-bronze construction is available for special applications. The type of water to be used and/or tube material preference should be specified.

Application Versatility

Although these coolers are designed primarily for oil cooler application, the exceptional performance they provide has extended their use to other services, as well. Type 202 units have been widely used as water-to-water heat exchangers, and have been employed in chemical applications with equally effective operation.

A Full Range of Sizes and Baffle Arrangements

Tate Andale offers Type 202 Oil Coolers in a wide range of sizes, with lengths from 20" to 92". (For smaller units, see Bulletin 281 on Type 202 Compact Oil Coolers). Each cooler is available with any one of several baffle arrangements to assure that your oil cooling requirements will be most effectively met.

The table below lists only a part of the complete Type 202 line. The lettered units and the numbered models—the larger frame coolers—are built on order to standard specifications.

Regardless of your oil cooling requirements, there is a Tate Andale Type 202 Oil Cooler that meets those needs. We invite your further inquiry.

Typical Performance

Oil (shell side)	—	Viscosity 500 SSU at 100°F. Enters Cooler at 145°F. Pressure Loss 10 psi
Water (tube side)	—	Enters Cooler at 85°F.

Cooler Size	Approx. Overall Dimensions Inches Length	Height	Width	Water GPM	Oil GPM	Oil Temp. from Cooler Deg. F.	Heat Extraction BTU/Hr.
B	20	9	11	8	6	126	23,000
F	28	9	11	10	13	129	43,000
K	37	11	12	15	40	134	91,000
M	45	11	12	20	54	134	123,000
R	45	12	14	25	68	134	160,000
50	50	14	24	Please consult Tate Andale with your performance requirements so that the proper recommendation can be made.			
57	77	20	34				
64	92	40	56				

Oil Coolers (with tubes 3/8" O.D. 18 BWG) Permanent Pipe-Connection Type 202

A Bolted Assemblage; Five Standard Parts; a Tube Bundle and Four Castings

Tube Bundle: A permanent assembly; Tubes 3/8" o.d., 18 bwg, round, straight, seamless cold-drawn copper; passed through holes drilled in turned brass Baffles; ends expanded into holes drilled in aluminum-bronze Tube Sheets.

Shell: Cast iron; bored throughout to a standard diameter 1/32" larger than the standard turned diameter of Baffles. Heads (water circuit): Cast iron. Gland: (which establishes oil seal at floating end) is a bronze casting.

The Coolers of This Group are designed for the use of FRESH water as a cooling medium.

The Thirty Coolers of this Series

Size is indicated by LETTER.
Baffle Spacing indicated by NUMBER.

B15	B1	B2	B25	B3
F15	F1	F2	F25	F3
H15	H1	H2	H25	H3
K15	K1	K2	K25	K3
M15	M1	M2	M25	M3
R15	R1	R2	F25	F3

Performance Guarantees.

Each one of the thirty coolers listed in this series is an exact duplicate in every detail of one of the test coolers on whose performance its guarantees are based. Its parts are interchangeable with those of the test cooler.

Typical Cooler Performances

— Viscosity 500 SSU at 100 deg. F.
Oil — Enters Cooler at 145 deg. F.
— Pressure Loss 10 lb. sq. in.
Water — Enters Cooler at 85 deg. F.

COOLERS	Water GPM	Oil GPM	Oil Temp. FROM Cooler deg. F.	Heat Extraction BTU-Hr.
B-2	8	6	126	23,000
F-15	10	5	113	33,000
F-3	10	13	129	43,000
K-2	15	18	124	80,000
K-3	15	40	134	91,000
R-2	25	32	124	140,000
R-3	25	68	134	160,000

Results of Actual Tests.

Note that this tabulation covers only seven of the thirty coolers; and only one of the many combinations of conditions met with in application of coolers to specific problems. This combination of conditions is typical, as to: oil viscosity specification; oil entering temperature; oil pressure drop; and water entering temperature.

Performances of these seven coolers indicate the range of capacities in the thirty coolers.

Statements in this tabulation are records of actual tests. They are only a small fraction of the Test Information that is available here as basis for selection of the most economical cooler.

Confining Oil and Water to Their Designed Circuits.

In each of these coolers there are two groups of seals, different in character and function. One group seals against leakage to atmosphere only (outside leakage of oil and water). Of these seals, four are on water (all gasketed); and two are on oil (one gasketed, and one a ring-seal in a stuffing box). These six seals are replaceable. Their leakage, at any time, is visible to the operator; as are the studs for their tightening if required.

The second group seals against leakage of oil to water, and of water to oil. These are the metal-to-metal seals, made tight by expanding tubes into holes in forged aluminum-bronze tube sheets. There is one such seal at each end of each tube (112 in the B cooler; 228 in the R cooler). In an assembled cooler they are not visible to the operator.

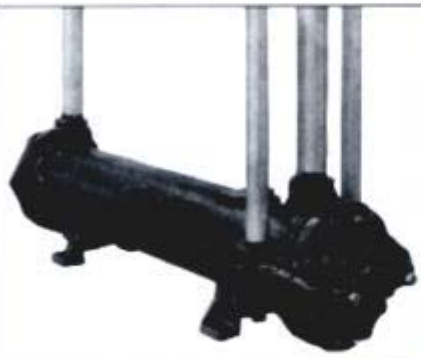

The Cooler, Assembled

Openings on top of shell, at either end, are into the shell bore, and are for connecting oil piping. Openings on either side of the shell, at the main end (toward left in illustration), lead to the main head, through holes in the shell flange, and are for connecting cooling water piping. Neither water connections nor oil connections are disturbed when cooler is opened. Illustration below shows that these four openings are not involved in disassembly of cooler.

The Parts that are Bolted into each Cooler Assembly.

All parts are accurately machined to standard dimensions, and are exactly replaceable.

Injurious Stresses Prevented.

Complete and continuous separation between oil and cooling water depends upon (a) the character of the tube-bundle's construction, and on (b) the tube bundle's complete protection from destructive stress from its own expansion and contraction, or from expansion or contraction of the shell which houses it.

In an oil cooler, when operating, the temperature of the tube bundle varies with that of the cooling water; the temperature of the shell varies with the temperature of the oil.

The tube bundle and the shell are rigid structures; they change length frequently an independently, due to changes in oil temperature and water temperature.

At each end of the cooler the seal against oil leakage to the atmosphere is between the shell casting and a tube sheet.

At main end of cooler the tube bundle is fastened firmly to the shell (gasket between main tube sheet and shell flange). At the other end the seal between oil and atmosphere is a sliding seal; a neoprene seal ring is held in the counterbore in shell by a studded gland, and is pressed against the sidewall of the tube bundle's tube sheet; which floats freely in that seal.

After testing for pressure-tightness every Tate Andale Oil Cooler is disassembled and the parts are cleaned, by degreasing in an organic solvent vapor, then reassembled and sealed against contamination.

Piece No. **LIST OF MATERIAL** Part. Material.

1. Shell. Cast iron.
Bored true straight, true round, to very exact standard dimensions; for the smallest clearances practical between Shell wall and Baffle edges. All surfaces exposed to oil are machine finished, free of foundry sand.

Connections for Thermometers and Pressure Gauges, on either Oil or Water connections, or both, will be drilled, tapped, and plugged, if specified by Customer when ordering. 3/4 in. p. t. Bronze plug, machine threaded.

1C. Locating Pin. Cold rolled steel. Positions Main Tube Sheet at Shell flange.

2. Main Head. Cast iron.
Paths of inlet, water and of outlet water are separated by its partition.

2A. Stud and Nut. Cold rolled steel.
Machine threaded.

2B. Main Tube Sheet Gasket on Oil.
Between Main Tube Sheet and Shell.

C. Gasket on Water Inlet or Outlet.
Between Shell and Main Head. (Not shown in assembly sketch. Shown in illustration of cooler opened).

2D. Main Head Gasket on Water.
Between Main Head and Main Tube Sheet, and on the partition between inlet water and outlet water.

3. Floating Head. Cast iron.
Type Y.

3A. Stud and Nut. Cold rolled steel.
Machine threaded.

4A-Oil. Packing on Oil.

4A-Water. Packing on Water.
At floating end.

4S. Packing Ring. Bronze.
Machine cut. Lantern gland at floating tube sheet; separating 4A-Oil and 4A-Water. Ring has inner channel continuous all around, with openings to atmosphere. (Clearance is liberal between Ring 4S and Floating Tube Sheet 5A).

10A. Pipe Plug. Bronze.
For Vent or Drain on Oil side. Machine threaded. For 1/2 in. p. t. On Oil side the Vents or Drains are always located on the shell, in either of the positions shown.

10B. Pipe Plug. Bronze.
For Vent or Drain on Water side. Machine threaded. For 1/2 in. p. t. On Water side the positions of Vents or Drains are determined by the construction details of the various cooler sizes.

8. Tube Bundle. Unit complete.
Bronze, forged bronze, and admiralty metal, unless otherwise specified.

All tubes are expanded the full length of the tube holes in the tube sheets. Before expansion the tubes are nearly the size of the tube holes. Expansion is completed with the smallest stretching of the tube metal's texture that is practical; and with no approach to fatigue. Therefore there is least tendency in the tube metal to draw away later from the tube sheet metal.

The unit is rugged, rigid, true straight, true round. Baffle Sheets fit in the machined Shell with very minute clearances, equal all around. Unit is tested with overpressures both ways after completion.

There are five different baffle arrangements in Tube Bundle designs, for different oil velocities. Tube Bundles of the same size, with different baffle arrangements, are interchangeable in Shells of the same size.

Parts for the Tube Bundle.

5. Main Tube Sheets; and

5A. Floating Tube Sheet,
are forged bronze. A bronze formula in which forging causes an increase in density and tensile strength; for drilling, and to hold expansions strongly. Tube Sheets are machined both sides and all over before drilling.

6. Baffle Sheet.
Substantial gauge, rugged. Segment cut, and mortised for Baffle Strips. True round, to exact dimensions; fitting shell wall with minute clearance.

Tube Sheets and Baffle Sheets are drilled at the same time, to same jigs. Holes in Tube Sheets are exact perpendicular and parallel. Tube holes in Baffle Sheets are only slightly larger than the Tubes.

6A 6E. Baffle Strips.
They run from Main Tube Sheet to Floating Tube Sheet, whole length of Tube Bundle. Mortised at correct distances to suit the designed baffle arrangement. Their mortises lock in other mortises cut at the edges of the Baffle Sheets. They throw the oil inward from the shell wall to the cooling tubes.

6B 6C 6D 6H 6J. Baffle Spacers.
Various exact lengths of tubes that fit closely over four or more of the cooling tubes. Their lengths are the exact distances that are to be maintained permanently between Baffle Sheet and Baffle Sheet; or between Tube Sheet and Baffle Sheet; in the various baffle arrangement designs. They hold the Baffle Sheets firmly in position. (6D shown; 6B, 6C, 6H, 6J not shown).

7. Tubes.
Strictly inspected and tested before use; for defects, for straightness, roundness, diameter, wall thickness and tested by overpressure both ways.

In Ordering Parts.

Every Tate Andale Oil Cooler has the name Tate Andale cast on the shell and bears the name plate of either the builder of the machine it serves or of Tate Andale Company. The plate shows the individual serial number identifying that specific unit. In any order or correspondence please mention that identifying number. As an added check please give any additional information that appears on the name plate.

Replacements and Changes.

All parts are made to jigs, and are interchangeable. An exact duplicate of any part can be produced at any time.

Tube bundles of the same size, in any of the five different baffle arrangements, are interchangeable.

If at any later time there is a change in a machine's oil gpm—or in require-ments as to oil temperature leaving cooler, or oil temperature drop, or total Btu per hour to be removed—the change may be met by inserting a tube bundle of a baffle design suited to the new requirements.

For salt water service in some cases special bronze heads are used, in which case the water connections are on the main head.

Parts Assembly

Tate Andale Oil Cooler. Type 202. Sizes A to R with Type Y Floating Head.

N.B.—Sketch is explanatory only. Not for dimensions.
All dimensions and clearances in this drawing are exaggerated.

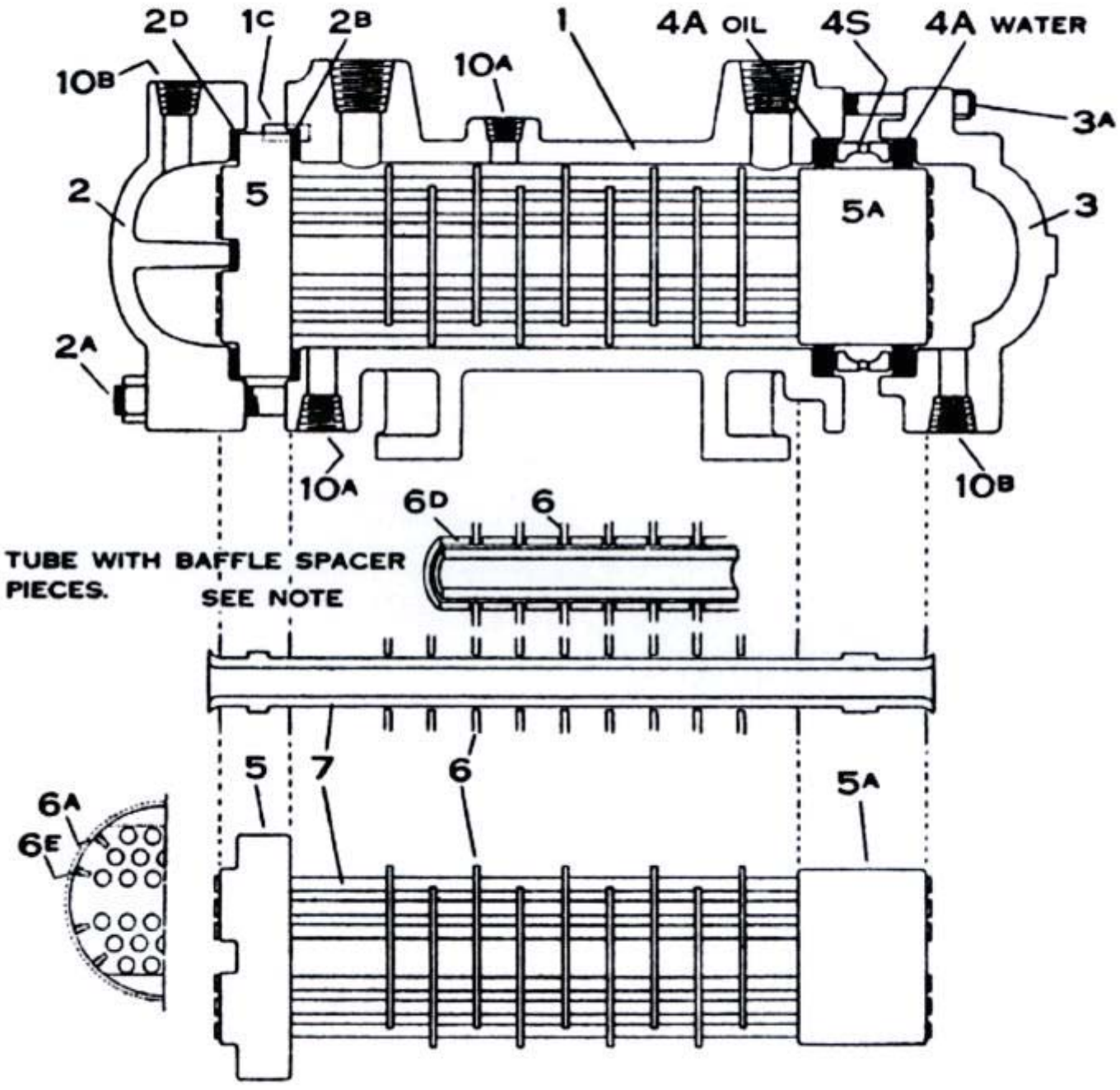

Part 8—Tube bundle complete. Removable as a unit. Tubes expanded into main and floating tube sheets.
Section through tube bundle shows the positions of baffle strips.
Baffle spacer pieces are used on four tubes to space the baffles accurately and to hold them rigidly in position.

Tate Andale Oil Cooler

With Water Thought Tubes, Oil Outside Tubes. Type 202. With Type Y Floating Head

De-Insulating the Heat-Transfer Surfaces

When they were first introduced many years ago Tate Andale Oil Coolers, in their design and structure, were a distinct departure from the practice that was usual in this field. They are based on complete recognition of some facts which until that time had not been met and dealt with thoroughly in oil cooling.

Lubricating oil develops substances that are insulative, resistant to the transfer of heat. The cooling of oil—removal of the required amount of heat from it—is, and always will be, carried on against the resistance of insulative substances that are brought and deposited by the oil itself. No matter what the shape and extent of a cooler's heat transfer surfaces may be, the insulative sludge and dirt will accumulate on them, because they are the coolest surfaces on the oil's circuit. The accumulation increases steadily. Ultimately, if it is not removed, that accumulation will reduce the cooler's heat removal capacity per degree mean temperature difference between oil and water, no matter how many square feet of cooling surface the cooler may have.

That reduction starts at the moment when a new or cleaned cooler is put into service. With a constant heat removal load coming to the cooler there will be a progressive rise in the temperature elevation at which that quantity of heat is removed from the oil. With the progressing accumulation of sludge there will be a progressing increase in the temperature of the oil supplied to the bearings.

Coolers Must Be Easily Cleanable.

For the dependability that is necessary in protecting machines, their service, and their oil, a cooler therefore must be able not merely to cool oil at a time when its surfaces are uninsulated; its design must provide for ease of freeing it from the insulative accumulations. Inasmuch as accumulated insulation could in time end a cooler's usefulness, the cooler's useful life depends on its being structurally susceptible of being opened, making its heat-transfer surfaces properly accessible for cleanings, and for inspection.

Cleaning is a task that is an inevitable, repeating and essential part of oil cooling. The more economically, conveniently and rapidly it can be done, the oftener it will be done; the smaller will be the reasons for postponing it.

Tate Andale Oil Coolers, their design and construction, are based on these principles. All oil and water connections are on the shell, none on the heads. In opening them no pipe connections are broken, no pipe fitting work is required. The design is such that insulative accumulations on the heat transfer surfaces can be removed with great thoroughness and economy.

Opening and Reclosing.

Before opening cooler shut the oil and water flow; drain oil and water sides. Remove main head, floating head, packing on water at floating end, lantern gland, and packing on oil.

Remove tube bundle. In removing and replacing tube bundle move it only in line with the shell bore; avoid injuring or bending the edges of transverse baffles.

When closing cooler see that all gaskets and backing are in good condition and flat in place. Before putting cooler back in service see that oil and water sides are fully vented.

After the cooler has been in use 6 or 8 hours retighten on gaskets and packing.

Cleaning.

Simplest method is: Hot bath; bundle horizontal in open-top tank of wood or metal; bath boiled with steam coil or steam jet; or agitated by other means. Emulsification of the sludge that is on oil side, by a mild alkali solution (for example, soda ash, tri-sodium phosphate, "Wyandotte," "Oakite," or other); with addition of a small quantity of a sulfonated fatty alcohol ("Duponol CA" or "Tergitol 4 or 08"). A practical formula is:

100	gals. water,
4	lbs. mild alkali cleanser,
0.4	lb. sulfonated fatty alcohol.

Tank should be of a size to contain the tube bundle in horizontal position, with six inches clearance all around; deep enough for a bath that will cover the tube group.

A perforated pipe should be set at bottom of tank, near the sides, and with its end brought over the edge of tank, ready for steam connection.

Put in one-third the amount of water necessary to completely cover the bundle. Add the alkali and sulfonated fatty alcohol, enough for the full bath, and boil thoroughly.

Add remaining two-thirds of cold water, necessary to cover the bundle. Adding this water will bring the temperature of the solution to approximately that of the bundle. Now immerse bundle and boil two hours.

A wooden partition or grating should be put between the bundle and heating element, to prevent the bundle coming in direct contact with the steam pipe.

During the boiling turn the tube bundle slightly from time to time until it has been turned over two or three times. Add makeup so that the tube group will be always submerged.

Boiling in this solution for two hours should remove any sludge deposit that may have formed.

Remove bundle, and hose out with hot water to wash out the loosened sludge. Turn the bundle and direct the hot water jet into the tube group in the six directions made possible by the tube arrangement.

The hot water will dry off quickly from the hot metal.

For still greater certainty that no carbon or other insoluble dirt remains anywhere in the passages between tubes, after drying, blow all passages with an air nozzle.

The tube bundle is then ready to be replaced in the shell.

If the above treatment does not produce the desired result communicate with Tate Andale Company.

Tate Andale
1941 Lansdowne Road, Baltimore, MD 21227-1789
(410) 247-8700 Fax: (410) 247-9672

ROPER 17F5 SPEC 0 PUMP
OIL PUMP FOR TURBINE I.B. BEARING

17 & ~~18~~ F1 - F5 SPEC 0

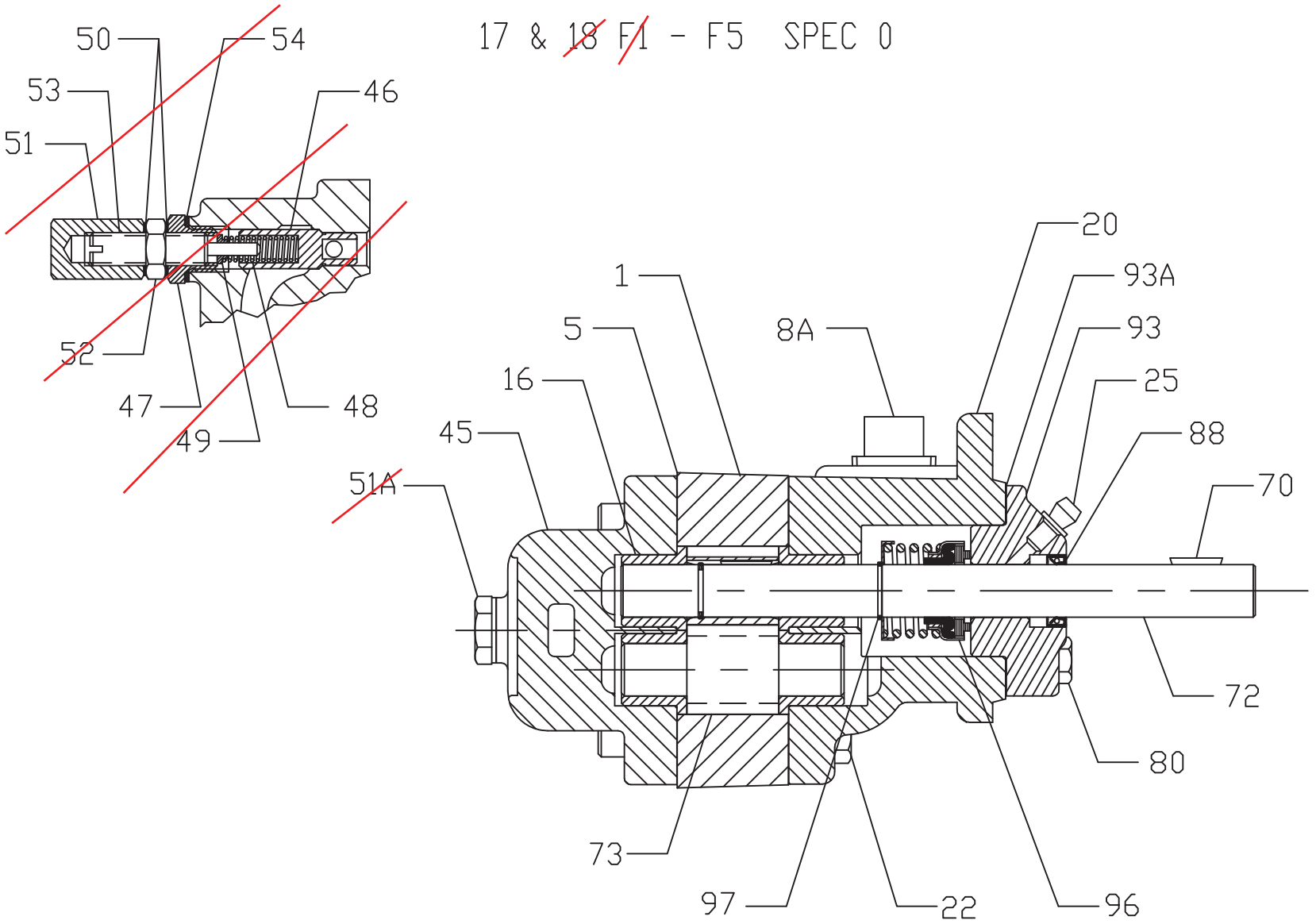

1, 2, 17, 18 F1-F5 SPEC 0 & SPEC 5

KEY NO.	DESCRIPTION	F1		F3		F5	
		QTY	PART NO.	QTY	PART NO.	QTY	PART NO.
1	Case Assy	1	N22-171	1	N22-170	1	N22-169
5	Case Gasket	2	D11-17	2	D11-18	2	D11-19
8A	Pipe Plug, Foot Mtd BP	2	G56-14	2	G56-14	2	G56-14
16	Bearing	4	G5-17	4	G5-18	4	G5-19
20	Backplate, Foot Mtd	1	P2-641	1	P2-642	1	P2-643
	Backplate, Flg Mtd	1	P2-657	1	P2-658	1	P2-659
22	Hex Hd Cap Screw, Plain	8	G49-025175	8	G49-025225	8	G49-025225
	Soc Hd Cap Screw, RV	8	G45-025150	8	G45-025225	8	G45-025225
23	Needle Brg, Pkg	1	G40-62	1	G40-62	1	G40-62
25	Lube Ftg	1	G63-1	1	G63-1	1	G63-1
45	Faceplate, Plain	1	P3-17	1	P3-18	1	P3-19
	Faceplate, RV	1	P3-161	1	P3-162	1	P3-163
~~46~~	~~Poppet~~	~~1~~	~~D16-50~~	~~1~~	~~D16-125~~	~~1~~	~~D16-52~~
~~47~~	~~Bonnet~~	~~1~~	~~D19-1~~	~~1~~	~~D19-1~~	~~1~~	~~D19-3~~
~~48~~	~~Spring (75 PSI)~~	~~1~~	~~G10-97~~	~~1~~	~~G10-97~~	~~1~~	~~G10-196~~
	~~Spring (150 PSI)~~	~~1~~	~~G10-99~~	~~1~~	~~G10-99~~	~~1~~	~~G10-212~~
	~~Spring (300 PSI)~~	~~1~~	~~G10-113~~	~~1~~	~~G10-113~~	~~1~~	~~G10-228~~
~~49~~	~~Spring Guide~~	~~1~~	~~N/A~~	~~1~~	~~N/A~~	~~1~~	~~D8-83~~
~~50~~	~~Gasket, RV Cap~~	~~2~~	~~G11-101~~	~~2~~	~~G11-101~~	~~2~~	~~G11-101~~
~~51~~	~~RV Cap~~	~~1~~	~~D20-4~~	~~1~~	~~D20-4~~	~~1~~	~~D20-4~~
~~51A~~	~~Plug Cap~~	~~1~~	~~D21-1~~	~~1~~	~~D21-1~~	~~1~~	~~D21-3~~
~~52~~	~~Nut~~	~~1~~	~~G44-29~~	~~1~~	~~G44-29~~	~~1~~	~~G44-29~~
~~53~~	~~Adjusting Screw~~	~~1~~	~~D15-1~~	~~1~~	~~D15-1~~	~~1~~	~~D15-3~~
~~54~~	~~Gasket, RV~~	~~2~~	~~D11-295~~	~~2~~	~~D11-295~~	~~2~~	~~G11-100~~
70	Key, Drive	1	D30-80	1	D30-80	1	D30-80
72	Drive Shaft & Gear, Mech Seal	1	N1-126	1	N1-127	1	N1-128
	Drive Shaft & Gear, Pkg	1	N1-120	1	N1-121	1	N1-122
73	Idler Shaft & Gear	1	D2-862	1	D2-855	1	D2-852
80	Hex Hd Cap Screw, Mech Seal	4	G49-019050	4	G49-019050	4	G49-019050
	Hex Hd Cap Screw, Pkg	4	G49-019062	4	G49-019062	4	G49-019062
85	Nut, Pkg	4	G44-28	4	G44-28	4	G44-28
86	Pkg Gland Clip	2	D42-9	2	D42-9	2	D42-9
87	Pkg Gland	1	P10-15	1	P10-15	1	P10-15
88	Lip Seal, Mech Seal	1	D83-30	1	D83-30	1	D83-30
	Lip Seal, Pkg	2	D83-30	2	D83-30	2	D83-30
89	Stud, Pkg	2	D22-69	2	D22-69	2	D22-69
91	Pkg Set	1	N43-10	1	N43-10	1	N43-10
92	Pkg Washer	1	D8-162	1	D8-162	1	D8-162
93	Brg Cage, Mech Seal	1	P4-39	1	P4-39	1	P4-39
	Pkg Housing, Pkg	1	P9-12	1	P9-12	1	P9-12
93A	Gasket	1	D11-34	1	D11-34	1	D11-34
96	Mech Seal	1	G14-263	1	G14-263	1	G14-263
97	Ret Ring	1	G41-72		N/A		N/A

33 & 34 F1-F5

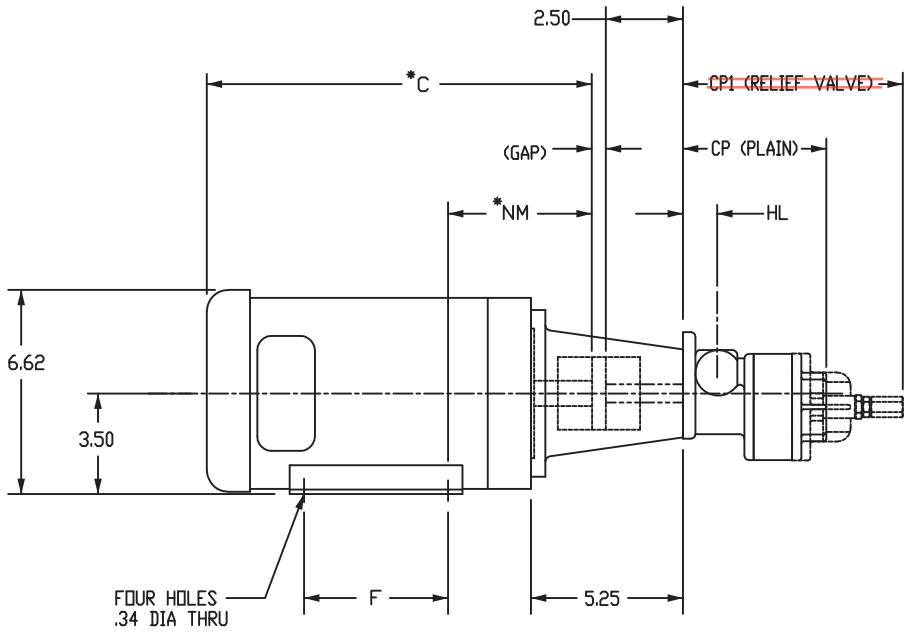

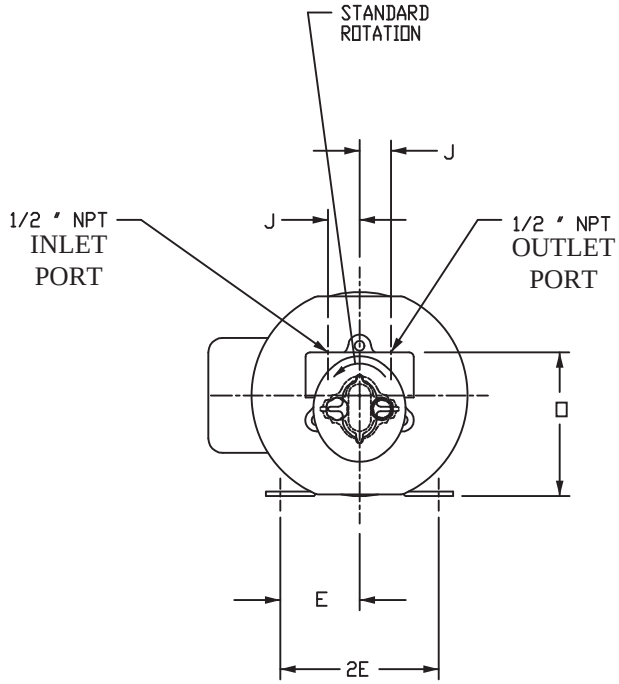

✓ = UNIT SELECTED

DIMENSIONS IN INCHES
WEIGHTS IN POUNDS

* DIMENSIONS AND MOTOR WEIGHTS WILL VARY BASED ON MOTOR MANUFACTURER AND TYPE. CHART DIMENSIONS AND MOTOR WEIGHTS BASED ON TEFC 3 PHASE MOTORS.

RV = RELIEF VALVE

LOVEJOY COUPLINGS STANDARD

PUMP	CP	CP1	HL	J	□	PUMP WEIGHT
~~1~~	~~3.94~~	~~6.05~~	~~.94~~	~~.88~~	~~4.69~~	~~7~~
~~3~~	~~4.81~~	~~7.02~~	~~1.07~~	~~1.00~~	~~4.88~~	~~10~~
5	5.63	8.03	1.31	1.00	5.00	14

✓	MOTOR FRAME	*MOTOR WEIGHT	BRACKET/CPLG/ HDWRE WT	*C	E	2E	F	NM	(GAP)
	56C	34	35	12.31	2.44	4.88	5.00	4.63	.69
	~~143TC~~	~~58~~		~~12.56~~	2.75	5.50	~~4.00~~	4.50	.63
	~~145TC~~	~~65~~		~~12.82~~			5.00		

ROPER PUMP COMPANY
P.O. BOX 269
3475 OLD MAYSVILLE RD
COMMERCE, GEORGIA 30529 U.S.A.

TELEPHONE: (706) 335-5551
TELEFAX: (706) 335-5505

DATE: _____

PUMP NO.: _____

ROPER NO.: _____

CUSTOMER: _____

CUSTOMER NO.: _____

SERVICE: _____

BALDOR
A MEMBER OF THE ABB GROUP

BALDOR • RELIANCE

Product Information Packet

CL3504

.5HP,1725RPM,1PH,60HZ,56C,3421L,TEFC,F1

Copyright © All product information within this document is subject to Baldor Electric Company copyright © protection, unless otherwise noted.

Part Detail

Revision:	Y	**Status:**	PRD/A	**Change #:**		**Proprietary:**	No
Type:	AC	**Prod. Type:**	3421L	**Elec. Spec:**	34WG5422	**CD Diagram:**	
Enclosure:	TEFC	**Mfg Plant:**		**Mech. Spec:**	34C062	**Layout:**	
Frame:	56C	**Mounting:**	F1	**Poles:**	04	**Created Date:**	
Base:	RG	**Rotation:**	R	**Insulation:**	B	**Eff. Date:**	10-07-2011
Leads:	6#18	**Literature:**		**Elec. Diagram:**		**Replaced By:**	

Nameplate NP1256L

CAT.NO.	CL3504						
SPEC.	34C62-5422						
HP	.5						
VOLTS	115/230						
AMP	7.4/3.7						
RPM	1725						
FRAME	56C	**HZ**	60	**PH**	1		
SER.F.	1.25	**CODE**	J	**DES**	N	**CLASS**	B
NEMA-NOM-EFF	68	**PF**	66				
RATING	40C AMB-CONT						
CC		**USABLE AT 208V**	4.3				
DE	6203	**ODE**	6203				
ENCL	TEFC	**SN**					
	SFA 8.2/4.1						

BALDOR A MEMBER OF THE ABB GROUP

Parts List

Part Number	Description	Quantity
SA008618	SA 34C62-5422	1.000 EA
RA005065	RA 34C62-5422	1.000 EA
EC1270A02SP	ELEC CAP, 270-324 MFD, 125V, 1.48D X 3.	1.000 EA
NS2512A01	INSULATOR, CONDUIT BOX X	1.000 EA
34CB3002A	CB CAST W/.88 DIA HOLE	1.000 EA
34GS1029A01	GASKET, CONDUIT BOX	1.000 EA
51XB1016A07	10-16 X 7/16 HXWSSLD SERTYB	2.000 EA
11XW1032G06	10-32 X .38, TAPTITE II, HEX WSHR SLTD U	1.000 EA
51XW0832A07	8-32 X .44, TAPTITE II, HEX WSHR SLTD SE	2.000 EA
34EP3102A01SP	FR ENDPLATE, MACH	1.000 EA
NS2500A01	INSULATOR, AUTO THER PROT	1.000 EA
34CB4800SP	CAPACITOR COVER, STAMPED	1.000 EA
34GS3000SP	GASKET, CAPACITOR BOX	1.000 EA
51XB1016A05	10-16X5/16HX WA SL SR TYB (F/S)	2.000 EA
WD1000A03	41531 AMP FLG.TERM,4M/REEL(2.5MIL)	1.000 EA
HW5100A03SP	WAVY WASHER (W1543-017)	1.000 EA
34EP3300A24SP	PU ENDPLATE, MACH	1.000 EA
51XN1032A20	10-32 X 1 1/4 HX WS SL SR	2.000 EA
34FN3002A01SP	EXTERNAL FAN, PLASTIC, .637/.639 HUB W/	1.000 EA
34FH4002A01	IEC FH NO GREASER	1.000 EA
51XW1032A06	10-32 X .38, TAPTITE II, HEX WSHR SLTD S	3.000 EA
34CB4517	CB LID 4 MTG HOLES .22 DIA STAMPED, FOR	1.000 EA
34GS1031A01	GASKET, FLAT CONDUIT BOX LID (LEXIDE)	1.000 EA
51XW0832A07	8-32 X .44, TAPTITE II, HEX WSHR SLTD SE	4.000 EA

BALDOR
A MEMBER OF THE ABB GROUP

Parts List (continued)

Part Number	Description	Quantity
HW2501D13SP	KEY, 3/16 SQ X 1.375	1.000 EA
HA7000A04	KEY RETAINER 0.625 DIA SHAFTS	1.000 EA
MG1000G27	PAINT- S9282E CHARCOAL GREY	0.014 GA
10XF0440S02	04-40 X 1/8 TYPE F HEX HD STAINLESS STIC	2.000 EA
SP5056A24	MODEL 34 TYPE L STATIONARY SWITCH WITH L	1.000 EA
HA3100A44	THRUBOLT 10-32 X 8.000	4.000 EA
LB1125C01	STD (STOCK) CARTON LABEL BALDOR WITH FLA	1.000 EA
LC0001A01	CONN LABEL / WARNING LABEL (LC0001 / LB1	1.000 EA
NP1256L	ALUM UL CSA CC	1.000 EA
34PA1005	PACKING GROUP, BALDOR	1.000 EA

BALDOR
A MEMBER OF THE ABB GROUP

Performance Data at 230V, 60Hz, 0.5HP (Typical performance - Not guaranteed values)							
General Characteristics							
Full Load Torque:	1.5 LB-FT			**Start Configuration:**		DOL	
No-Load Current:	2.8 Amps			**Break-Down Torque:**		4.13 LB-FT	
Line-line Res. @ 25°C.:	4.44 Ohms A Ph / 3.19 Ohms B Ph			**Pull-Up Torque:**		3.6 LB-FT	
Temp. Rise @ Rated Load:	63 C			**Locked-Rotor Torque:**		4.65 LB-FT	
Temp. Rise @ S.F. Load:	77 C			**Starting Current:**		16.5 Amps	
Load Characteristics							
% of Rated Load	**25**	**50**	**75**	**100**	**125**	**150**	**S.F.**
Power Factor:	32.0	46.0	59.0	66.0	72.0	80.0	72.0
Efficiency:	42.0	58.0	65.0	68.0	69.0	68.0	69.0
Speed:	1783.0	1765.0	1750.0	1730.0	1710.0	1680.0	1710.0
Line Amperes:	2.8	3.0	3.3	3.7	4.1	4.8	4.1

Performance Graph at 230V, 60Hz, 0.5HP Typical performance - Not guaranteed values

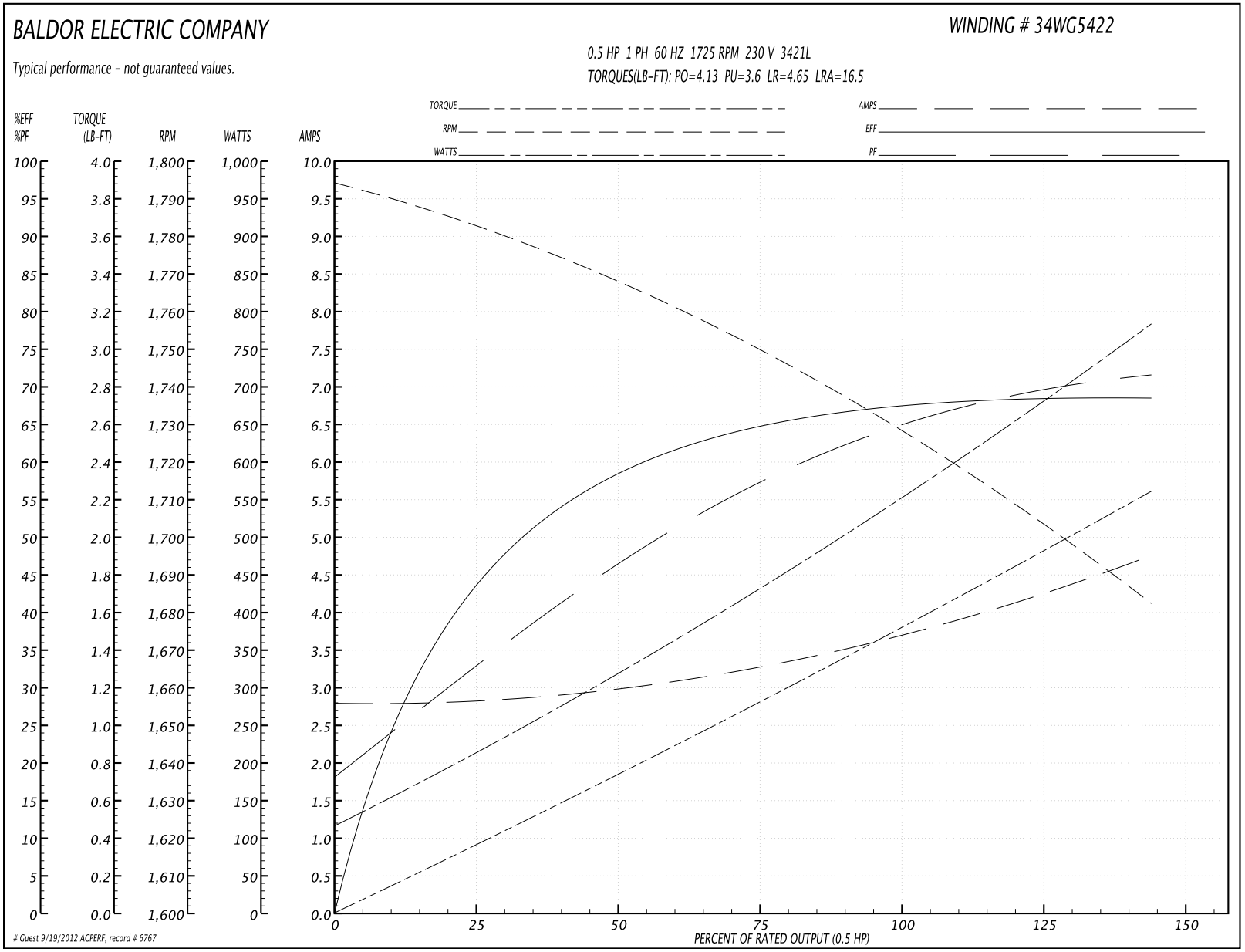

BALDOR
A MEMBER OF THE ABB GROUP

Performance Data at 115V, 60Hz, 0.37KW (Typical performance - Not guaranteed values)							
General Characteristics							
Full Load Torque:	2.03 N-M			**Start Configuration:**		DOL	
No-Load Current:	5.6 Amps			**Break-Down Torque:**		5.6 N-M	
Line-line Res. @ 25°C.:	1.06 Ohms A Ph / 3.13 Ohms B Ph			**Pull-Up Torque:**		4.88 N-M	
Temp. Rise @ Rated Load:	63 C			**Locked-Rotor Torque:**		6.3 N-M	
Temp. Rise @ S.F. Load:	77 C			**Starting Current:**		33.0 Amps	
Load Characteristics							
% of Rated Load	**25**	**50**	**75**	**100**	**125**	**150**	**S.F.**
Power Factor:	35.0	47.0	57.0	64.0	70.0	72.0	70.0
Efficiency:	41.9	58.2	64.8	67.9	68.9	67.9	68.9
Speed:	1783.0	1765.0	1750.0	1730.0	1710.0	1680.0	1710.0
Line Amperes:	5.6	6.0	6.6	7.4	8.2	9.6	8.2

BALDOR A MEMBER OF THE ABB GROUP

Performance Graph at 115V, 60Hz, 0.37KW Typical performance - Not guaranteed values

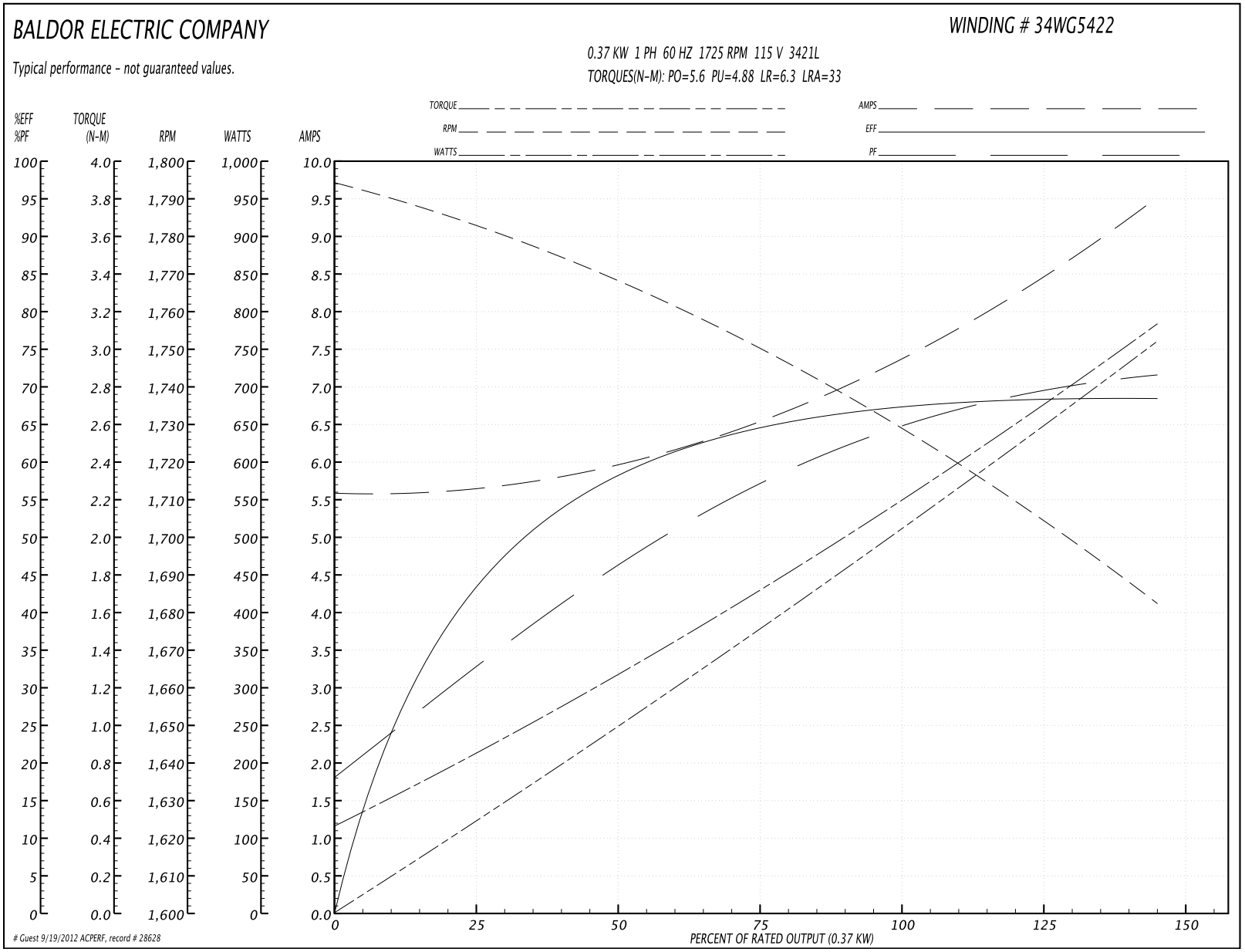

BALDOR
A MEMBER OF THE ABB GROUP

34LYC062

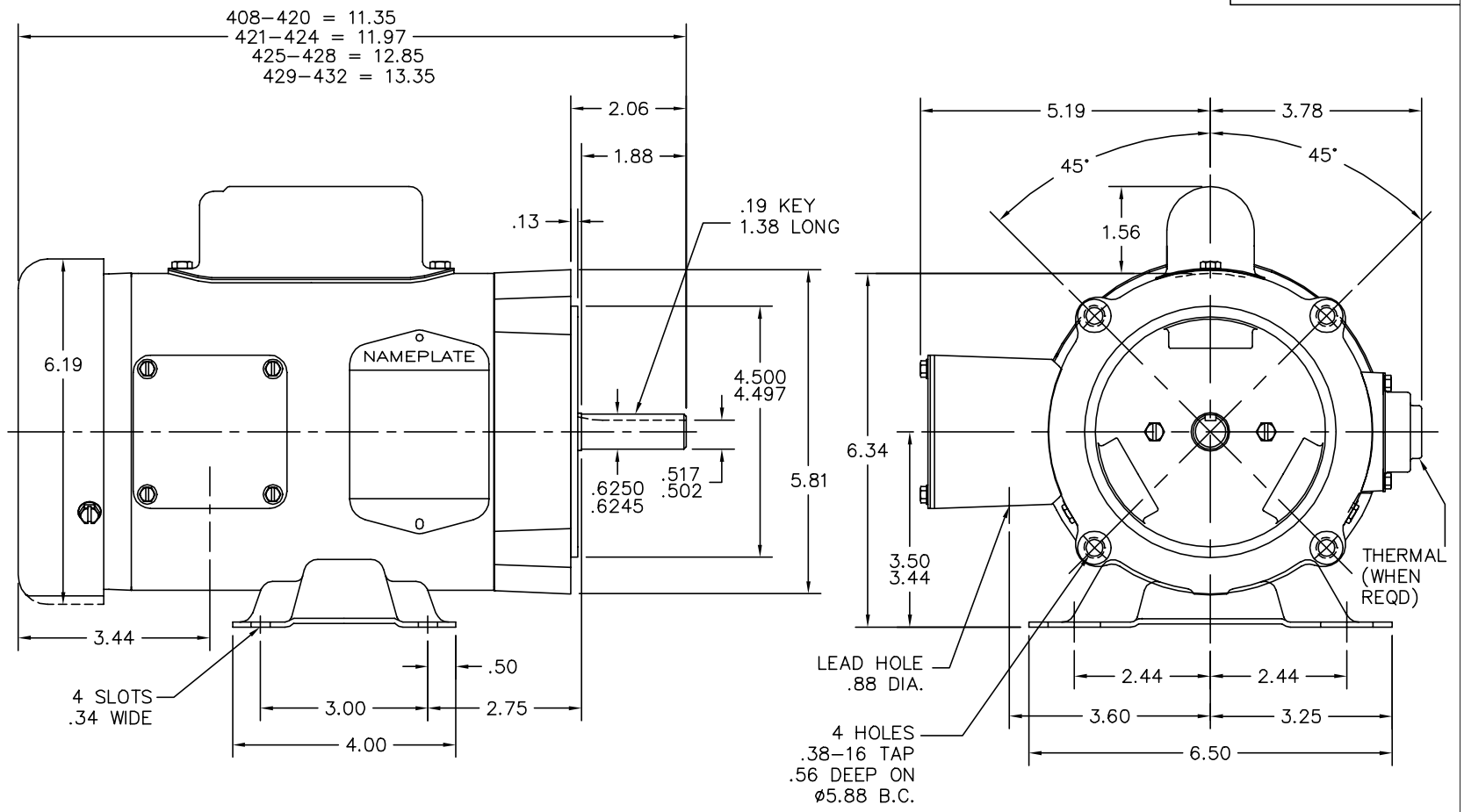

CUSTOMER IS RESPONSIBLE FOR DETERMINING THAT MOTOR PERFORMANCE IS SUITABLE IN THE APPLICATION.

REV. DESC: SHOW CORRECT POSITION OF 4 HOLES .38–16 TAP			**Baldor • Dodge • Reliance**
REV. LTR: K	VERSION: 02	TDR: 000000440498	
34LYC062	FILE: \AAA\00000\690	REVISED: 14:14:48 08/13/2007	STD HORZ MODEL 34L NEMA 56C TEFC
	MTL: –	BY: ENROSTO	

34LYC062

BALDOR A MEMBER OF THE ABB GROUP

CD0001

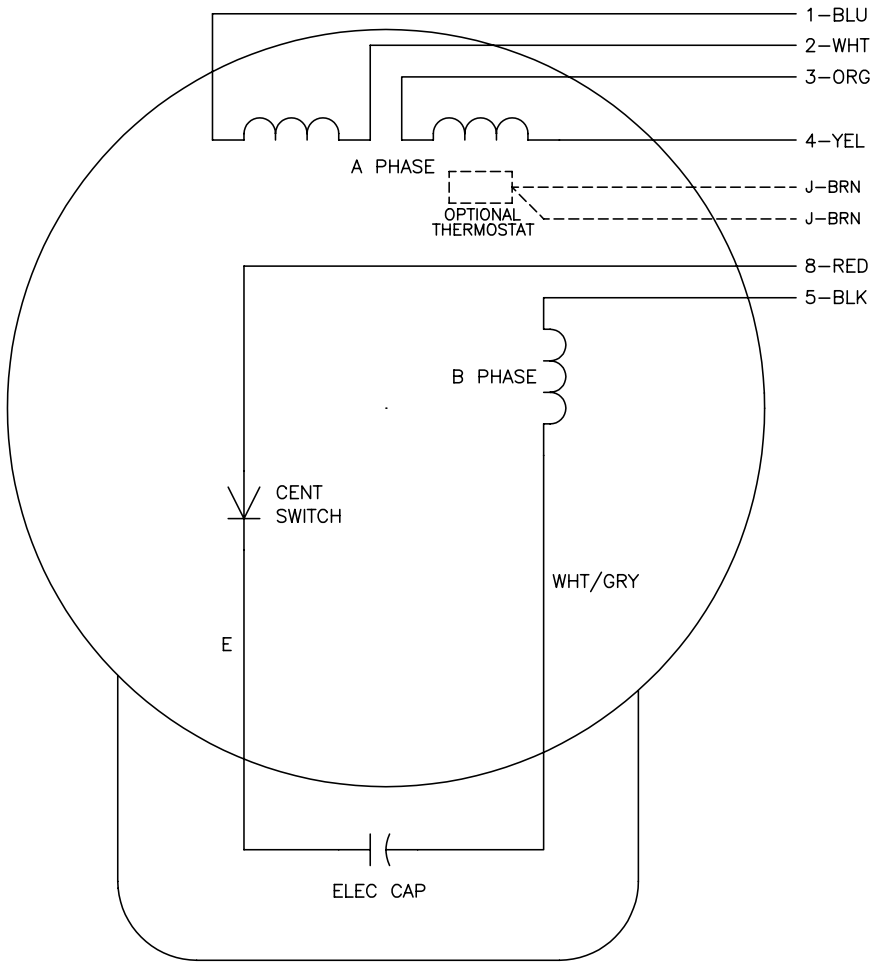

	LINE A	LINE B	JOIN
HIGH STD	1	4,5	2,3,8
HIGH OPP	1	4,8	2,3,5
LOW STD	1,3,8	2,4,5	–
LOW OPP	1,3,5	2,4,8	–

NOTES:

1. STANDARD ROTATION IS CCW FACING END OPPOSITE SHAFT EXTENSION.
2. OPTIONAL THERMOSTAT IS PROVIDED WHEN SPECIFIED.
3. MULTIPLE CAPACITORS ARE CONNECTED IN PARALLEL UNLESS OTHERWISE SPECIFIED.
4. LEAD COLORS ARE OPTIONAL. LEADS MUST ALWAYS BE NUMBERED AS SHOWN.

REV. DESC: REVISE TO SHOW OPTIONAL COLORS			
REV. LTR: D	BY: JLP	REVISED: 04/08/99 1:16	TDR: 0178636
CD0001		FILE: AAA00007405	MDL: –
		MTL: –	

BALDOR ELECTRIC Co.

TYPE L, DV, REV, 6 LEADS

CD0001

BALDOR A MEMBER OF THE ABB GROUP

Engineering Manual

Version 4.2

Orkot® Marine Bearings

Contents

About this Manual 3
A Global Approach 3
Orkot® Marine Bearings 3
Management Systems and Classification 3
Material Properties 4
Service and Support 6
Web Site 6
World Wide Availability 6
Marine Stock Tube Sizes 6
Standard Production Capacity Guidelines 7
Contact Details 7
Rudder Bearings 8
- Bearing Design Pressure 8
- Material Selection 8
- Lubrication 8
- Housing and Shaft Requirements 8
  - Housing 8
  - Shaft 8
- Design 9
  - Wall Thickness 9
  - Bearing Interference 9
  - Bearing Clearance 10
- Machining Tolerance 10

Water Lubricated Stern Tube Bearings 11
- Bearing Design Pressure 11
- Material Selection 11
- Shaft Requirements 11
- Design 11
  - Multi Groove Bearing 11
  - Twin Groove Bearing 11
  - Special Designs 11
  - Staves 12
  - Water Flow Rate 12
  - Bearing Interference and Clearance 13
- Machining Tolerance 14

Fitting Methods 15
- Freeze Fitting 15
- Press Fitting 16
- Bonding 17

Machining Instructions 18
Health and Safety Data 20
Calculation Sheets 24

About this Manual

The information in this manual allows the user to correctly design Orkot® Marine Bearings and gives guidance on machining and fitting. It is intended for use by persons with technical training at their own discretion. The design of Orkot® Marine Bearings should take into account the current rules and regulations of the relevant classification society.

A Global Approach

Trelleborg Sealing Solutions is a world leading manufacturer and supplier of bearings to the shipping and marine industries.

Supported by an extensive global network of manufacturing plants, agents and distributors, Trelleborg Sealing Solutions are able to offer the highest levels of quality of service associated with a leading company within the marine industry.

Part of the Trelleborg group of companies, Orkot® Marine Bearings have been supplied to the Marine and shipping industries for over 30 years.

Extensive experience has been gained within the shipbuilding and offshore industries with a wide range of applications on board both merchant and military vessels.

Orkot® Marine Bearings

Orkot® Marine Bearings are manufactured from a unique synthetic composite incorporating solid lubricants for dry running to ensure outstanding wear life. Virtually no swelling in sea water and very low thermal coefficient of expansion provide dimensional stability in arctic and tropical seas. It does not corrode or promote corrosion of the housing and tolerates both edge loading and misalignment.

Management Systems and Classification

Trelleborg Sealing Solutions operate a fully integrated management system which incorporates, ISO 9001 Quality Management System, ISO 14001 Environmental Management System and OHSAS 18001 Health and Safety Management System

Strict quality control and testing ensure material conformance and batch traceability. Routine testing is performed to simulate the extreme operational environments where the materials are used.

Type approval certification is held for Orkot® TLM Marine and TXM Marine grades from the worlds leading classification societies. We can supply full listing of the certificates we hold upon request. This listing can also be found on our website: **www.orkotmarine.com**

Material Properties

Table 1: Metric

Properties	Unit	TLM Marine	TXM Marine
Compressive Strength			
Normal to Laminate	N/mm^2	300	280
Parallel to Laminate	N/mm^2	90	90
Tensile Strength	N/mm^2	60	55
Flexural Strength	N/mm^2	65	65
Elastic Modulus			
Bending	$N/mm^2 \times 10^4$	0.19	0.18
Tensile	$N/mm^2 \times 10^4$	0.32	0.32
Shear Strength	N/mm^2	80	80
Impact Strength (ISO179/1987 Charpy Impact Unnotched)			
Normal to Laminate	KJ/m^2	122	122
Hardness - Rockwell M		100	100
Density	g/cm^3	1.3	1.3
Swell in Water, % of wall thickness	%	0.1	0.1
Operating Temperature			
Range for normal use. (Without special precautions)	°C	-30/65	-30/65
Max operating temperature	°C	130	130
Min. operating temperature	°C	-150	-150
Thermal Expansion Coefficient 20 - 100 °C (per °C x 10^{-5})			
Normal to laminate	°C x 10^{-5}	9 - 10	9 - 10
Perpendicular to laminate	°C x 10^{-5}	5 - 6	5 - 6
Sliding Properties Typical coefficient of friction running dry against a corrosion resistant surface such as stainless steel. Bearing pressure $15N/mm^2$		0.13	0.05 - 0.10

Material Properties

Table 2: Imperial

Properties	Unit	TLM Marine	TXM Marine
Compressive Strength			
Normal to Laminate	lbs/in^2	43511	40611
Parallel to Laminate	lbs/in^2	13053	13053
Tensile Strength	lbs/in^2	8702	7977
Flexural Strength	lbs/in^2	9427	9427
Elastic Modulus			
Bending	lbs/in^2 x 10^4	27.557125	26.10675
Tensile	lbs/in^2 x 10^4	46.412	46.412
Shear Strength	lbs/in^2	11603	11603
Impact Strength (ISO179/1987 Charpy Impact Unnotched)			
Normal to Laminate	KJ/in^2	0.079	0.079
Hardness - Rockwell M		100	100
Density	lbs/in^3	0.047	0.047
Swell in Water, % of wall thickness	%	0.1	0.1
Operating Temperature			
Range for normal use. (Without special precautions)	°F	-22/149	-22/149
Max operating temperature	°F	266	266
Min. operating temperature	°F	-238	-238
Thermal Expansion Coefficient 68 - 212 °F (per °F x 10^{-5})			
Normal to laminate	°F x 10^{-5}	5.0 - 5.5	5.0 - 5.5
Perpendicular to laminate	°F x 10^{-5}	2.7 - 3.3	2.7 - 3.3
Sliding Properties			
Typical coefficient of friction running dry against			
a corrosion resistant surface such as stainless			
steel. Bearing pressure 2175lbs/in^2		0.13	0.05 - 0.10

Service and Support

Trelleborg Sealing Solutions have a team of experienced and highly skilled engineers who offer a full and complete service tailored to your specific requirements. Some aspects of this service are:

- Recommendations on adapting our bearings to specific environmental and operational conditions.
- Calculation of bearing dimensions for pre-despatch or on site machining
- Technical assistance with bearing installations
- Full technical backup and support throughout the service life of the bearing
- 24 hour emergency support

This extensive support service is complimented by a comprehensive range of technical documentation and the Orkot® Marine Bearings calculation program.

Web Site

Visit our website on: **www.orkotmarine.com** for general and technical information on Orkot® Marine Bearings products and applications. You will be able to view and download certificates, literature and other documents.

World Wide Availability

Orkot® Marine Bearings distribution network is set up to meet the urgent demands of modern ship repairing. Standard Orkot® TLM Marine tubes, which can be shipped the same day, are stocked world wide by local distributors in the major ship repairing centres. These are backed up by additional large stocks in our manufacturing plants.

Our modern, well equipped facilities can manufacture specific sizes of raw material in both tube and sheet form for despatch within 24 hours. They can also supply a full range of finished-machined products quickly and economically, including:

- Plain bearings
- Flanged bearings
- Grooved bearings
- Staves
- Thrust bearings
- Spherical bearings
- Wear rings
- Pads
- Strips
- Washers

Marine Stock Tube Sizes Table

Table 3

Reference	od (mm)	id (mm)	Length (mm)	Weight (Kg)	od (inch)	id (inch)	Length (inch)	Weight (lbs)
TLM 13	95	47.6	500	3.5	3.7	1.9	19.7	7.7
TLM 21	118	66.7	500	4.9	4.6	2.6	19.7	10.8
TLM 22	150	88.9	500	7.5	5.9	3.5	19.7	16.5
TLM 23A	170	108	500	8.8	6.7	4.3	19.7	19.4
TLM 23	190	120.7	600	12.5	7.5	4.8	23.6	27.6
TLM 24	230	146.1	700	21.9	9.1	5.8	27.6	48.3
TLM 26	305	177.8	780	49.1	12.0	7.0	30.7	108.2
TLM 29	370	235	650	53.3	14.6	9.3	25.6	117.5
TLM 29A	400	270	650	57.8	15.7	10.6	25.6	127.4
TLM 31	445	295	570	64.6	17.5	11.6	22.4	142.4
TLM 32	480	381	590	51.4	18.9	15.0	23.2	113.3
TLM 34	520	403	700	77.2	20.5	15.9	27.6	170.2
TLM 36	595	450	710	110.0	23.4	17.7	28.0	242.5
TLM 39	650	500	800	134.0	25.6	19.7	31.5	295.4
TLM 42	735	600	840	154.0	28.9	23.6	33.1	339.5

Standard Production Capacity Guidelines

With our current standard equipment and production processes we are able to manufacture parts within the following guidelines. However we specialise in engineering solutions so please do not hesitate to contact us if your requirements fall outside of these limits.

- Tube products up to 2500mm (98”) outside diameter and 1250mm (49”) long
- Sheets products up to 860mm (33”) wide and 3000mm (118”) long
- Rod products up to 200mm (8”) outside diameter and 500mm (19”) long

Contact Details

Please refer to our web site for the contact details of your local agent or distributor. Alternatively you can contact one of our manufacturing plants on the following:

Trelleborg Sealing Solutions
Rotherham, South Yorkshire, UK:

Phone: +44 1709 789828

Fax: +44 1709 789802

E-mail: **enquiries@orkotmarine.com**

24 hour emergency mobile phone: +44 1709 789840

Trelleborg Sealing Solutions
Eugene, Oregon, USA:

Phone: +1 541 688 5529

Fax: +1 541 688 2079

E-mail: **inquiries.americas@orkotmarine.com**

24 hour emergency mobile phone +1 800 546 7568

Rudder Bearings

This section provides general advice on rudder bearing design. It also provides the information required to allow the user to calculate the machining sizes of a rudder bearing before and after fitting.

Page 25 shows a completed example of the Orkot® Marine Bearings calculation for you to examine. Page 24 contains a blank for you to complete your own calculation. Alternatively please feel free to contact your local agent, distributor or manufacturing plant and we will be happy to advise you of the machining sizes.

A spreadsheet based calculation program is available upon request.

Prior to carrying out any calculation, the following information must be available:

- Minimum bearing operating temperature
- Approximate ambient temperature during machining
- Housing and shaft sizes with tolerances

Bearing Design Pressure

Orkot® TLM Marine has classification approval for up to 15N/mm² (2,176 lb/in²) in rudder bearing applications, while TXM Marine has approval for up to 10N/mm² (1,450 lbs/in²). Clearly, this is linked to the application and the other components involved. When looking only at the properties of Orkot® Marine bearings much higher loads can be sustained. Orkot® Marine bearings are in use in many other applications such as deck cranes, hatch cover slide pads, mooring systems and ships stabilisers operating at bearing pressures ranging from 25 up to 100 N/mm² (3,626 - 14,504 lb/in²).

Material Selection

Orkot® TLM Marine is the preferred material grade for rudder stock, pintle, neck and carrier bearings. It incorporates solid lubricants which enable dry running to ensure outstanding wear life for all rudder bushes operating above or below the draft line. The material will operate without lubrication at pressures of 30 N/mm² (4,351 lb/in²) for short periods and has been tested at pressures of 14.5 N/mm² (2,103 lb/in²) with a velocity of 1.3 m/min (4.3 ft/min) for 1.5 million cycles with minimum lubrication.

Orkot® TXM Marine is a high performance material which exhibits lower friction and wear properties than our TLM Marine grade. It is approved to operate without lubrication in rudder bearing applications and has been tested, with lubrication against stainless steel for submarine steering gear at 57 N/mm² (8,267 lb/in²) at 1 m/min (3.3 ft/min).

Lubrication

Water, grease or oil can provide bearing lubrication depending on the application. No axial grooves are required with lubricated rudder bearings. Orkot® TLM Marine rudder bearings are capable of intermittent dry running against K-Monel®, Inconel® 625, Stellite®, duplex stainless and suitable corrosion resistant stainless steels.

Housing and Shaft Requirements

Housing

The bearing housings internal diameter, particularly on refits, should be measured in at least three positions along its length. At least two measurements should then be taken at 90 degrees to each other in the radial plane and the resultant figures used to obtain the average diameters of each position. If the housing is oval or tapered Orkot® can still be used if the problem is not excessive (0.1mm per 100 mm or 0.004" per 4"), the material has some elasticity, but it will not compensate for severe wear. It should be noted that the bearing will take the shape of the housing when fitted with an interference.

The housing should be provided with an adequate chamfer to prevent shaving the bearing when press fitting.

After fitting the bearing should be retained at one end by a shoulder and for additional axial security a keeper ring may be used at the other. The following diagram illustrates this method.

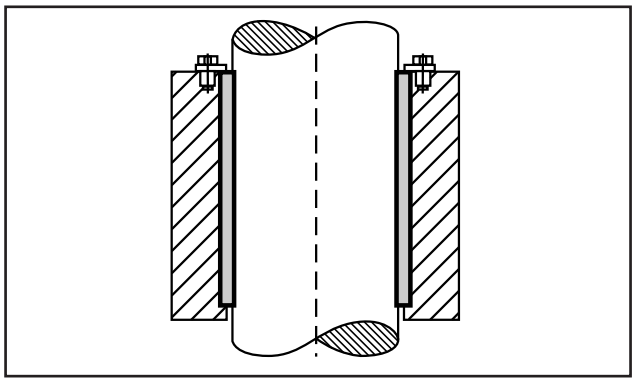

Figure 1: Fitted bearing

Shaft

The shaft or liner surface in contact with an Orkot® Marine bearing when lubricated by water must be of corrosion resistant material to ensure low wear. Suitable materials are seawater corrosion resistant stainless steel, phosphor bronze, gunmetal, Inconel® 625 and Stellite®.

The shaft should be smooth, without cutting edges. The ideal shaft surface finish is between 0.1 and 0.8 Ra micrometers or 4 and 32 Ra micro inches.

Design

Wall Thickness

Normally in refits, the wall thickness of the bearing is fixed by the shaft and housing dimensions.

For new bearing designs the optimum wall thickness should be calculated as:

0.035 x shaft diameter plus 2 mm (0.08").

Any bearing design with a wall thickness below this value should always be checked by our engineering department to ensure it meets our minimum requirements.

It should be noted that when an Orkot® Marine bearing of the optimum thickness is fitted into a housing the interference is reflected as a reduction of the bearings internal diameter after fitting, i.e. the wall thickness before and after fitting will normally remain constant. Bearings with thicker than optimum walls may give less "bore closure".

Bearing Interference

As with all polymer bearings, the interference required to hold the bearing in place during operation is higher than that required by metal bearings because the modulus of polymer materials is lower.

Tables 4, 5, 6 and 7 show the various values for "m" and "c" that are required to calculate the recommended interference for Orkot® Marine rudder bearings. These values are dependent upon the minimum operating temperature of the bearing and the temperature of the machine shop at the time of machining. These temperature figures should be used in relation with these tables when selecting the values of "m" and "c".

Once these values have been obtained from the tables they should be entered into the following equation in order to calculate the required interference.

Interference = (m x Housing ID) + c

Once an interference value has been calculated it can be entered into the Marine Bearing Calculation.

Table 4

Operating Temp (°C)	Value of "m" Machining Temperature (°C)						
	0	5	10	15	20	25	30
0	0.00131	0.00155	0.00178	0.00202	0.00225	0.00249	0.00273
-10	0.00178	0.00202	0.00225	0.00249	0.00273	0.00296	0.00320
-20	0.00229	0.00253	0.00277	0.00300	0.00324	0.00347	0.00371
-30	0.00291	0.00311	0.00331	0.00351	0.00371	0.00391	0.00411

Table 5

Operating Temp (°C)	Value of "c"
0	-0.125
-10	-0.125
-20	-0.143
-30	-0.158

Table 6

Operating Temp (°F)	Value of "m" Machining Temperature (°F)						
	32	41	50	59	68	77	86
0	0.00131	0.00155	0.00178	0.00202	0.00225	0.00249	0.00273
-10	0.00178	0.00202	0.00225	0.00249	0.00273	0.00296	0.00320
-20	0.00229	0.00253	0.00277	0.00300	0.00324	0.00347	0.00371
-30	0.00291	0.00311	0.00331	0.00351	0.00371	0.00391	0.00411

Table 7

Operating Temp (°F)	Value of "c"
32	-0.00492
14	-0.00492
-4	-0.00563
-22	-0.00622

Bearing Clearance

The minimum recommended bearing clearance for an Orkot® Marine rudder bearing can be established using the graphs, Figures 2 and 3. The lower line indicates the minimum clearances which we recommend where the alignment is good and housing distortion low. The upper line is based on typical classification minimum clearances, for example, Lloyds Register specify 0.002d + 1.0mm (0.04") but not less than 1.5 (0.06") mm for synthetic bearings.

Where Classification Societies other than Lloyds Register are specified, the mean clearance between the upper and lower lines on the graph should be used. This is based on the Unified requirement UR S10 of IACS OF 0.001 D + 1 mm minimum clearance but not less than 1.5mm with an addtional allowance for water swell and thermal expansion. Our rudder bearing calculation program Issue 8 defaults to this clearance.Where the Classification Society rules are not applied it is suggested that a clearance is selected from between these two lines.

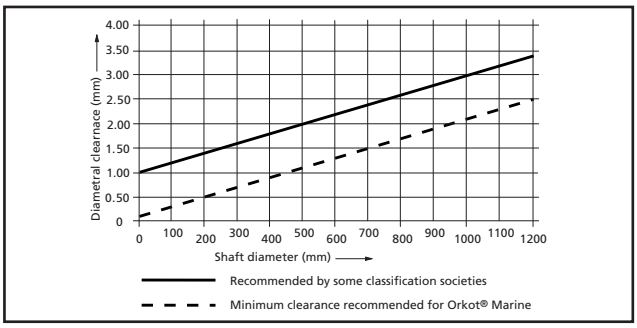

Figure 2: Bearing starting clearance in mm

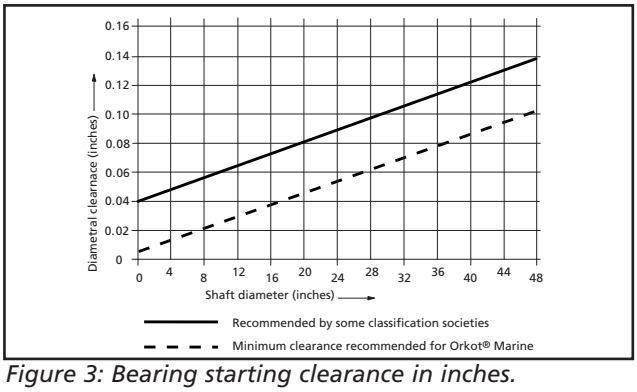

Figure 3: Bearing starting clearance in inches.

The equations for the slopes on this graph are as follows. These equations will allow you to calculate a more accurate clearance figure.

Metric

Upper slope (Typical classification minimum):

Clearance = (0.002 x Shaft Diameter) + 1.0

Lower slope (Orkot® recommended minimum):

Clearance = (0.002 x Shaft Diameter) + 0.1

Mean between the two slopes (Typically used in Orkot® Marine Bearings calculations):

Clearance = (0.002 x Shaft Diameter) + 0.55

Imperial

Upper slope (Typical classification minimum):

Clearance = (0.002 x Shaft Diameter) + 0.04

Lower slope (Orkot® recommended minimum):

Clearance = (0.002 x Shaft Diameter) + 0.004

Mean between the two slopes (Typically used in Orkot® Marine Bearings calculations):

Clearance = (0.002 x Shaft Diameter) + 0.022

Once a clearance value has been calculated it can be entered into the Marine Bearing Calculation.

Machining Tolerance

The following tables show the machining tolerances Orkot® Marine Bearings machine shop can achieve when machining rudder bearings. These can be substituted into the calculation with your own machining tolerance should they differ from those stated.

Once machining tolerance values have been selected they can be entered into the Marine Bearing Calculation. All of the required elements of the calculation should now be in place and the final figures can now be calculated.

Recommended Machining Tolerance OD and ID for Orkot® Marine Rudder Bearings

Table 8

Diameter OD and ID mm	Tolerance Band mm
1 - 100	0.10
101 - 300	0.15
301 - 500	0.20
501 - 900	0.25
above 900	0.40

Table 9

Diameter OD and ID inch	Tolerance Band inch
0 - 4	0.004
4 - 12	0.006
12 - 20	0.008
20 - 36	0.010
above 36	0.016

Water Lubricated Stern Tube Bearings

This section provides general advice on stern tube bearing design. It will also provide the information required to allow the user to calculate a stern tube bearings dimensions before and after fitting.

Page 26 shows a completed example of the Orkot® Marine calculation for you to examine. Page 24 contains a blank for you to complete your own calculation. Alternatively please feel free to contact your local agent, distributor or manufacturing plant and we will be happy to advise you of the machining sizes.

Prior to carrying out any calculation, the following information must be available:

- Housing and shaft sizes with tolerances

Bearing Design Pressure

Water lubricated propeller shaft bearings need to operate hydrodynamically, i.e the shaft speed should be sufficient to generate a water film to separate the shaft from the bearing. The design of these bearings is governed by the length to shaft diameter ratio which can vary from 4:1 to 2:1 depending on the bearing position and upon approval from the classification societies. Most classification societies apply a ratio of 2:1 for Orkot® Marine grades. Full copies of the certificates are available upon request or from our web site: **www.orkotmarine.com**

Material Selection

It should be noted that Orkot® materials are not suitable for use in high speed grease or oil lubricated stern shaft systems.

Orkot® TLM Marine is suitable for the majority of water lubricated stern tube systems.

Orkot® TXM Marine is especially suitable for low shaft velocities i.e. naval surface ship and submarine stern shafts.

Shaft Requirements

Orkot® Marine bearings can be used with most recognised shaft materials and are found to be compatible with gunmetal, phosphor bronze, Monel, Inconel® 625, 18/8 stainless steel.

If the bearing is subject to abrasive ingress, consideration should be given to the use of harder shaft liners or carbide coatings. Orkot® Marine Bearings tend to improve the surface finish during running. As with all bearings subject to the ingress of abrasive particles, life can be reduced. For the stern tube bearings of a vessel operating under such conditions a filtered water supply is recommended.

It should be noted that Orkot® TXMM will give lower wear if abrasive conditions exist.

A shaft surface finish of 0.8 micrometers or 32 microinches Ra is required to reduce bedding in wear.

Design

A number of bearing designs can be manufactured from Orkot® Marine grades for stern tube bearing applications. The types in order of popularity are as follows:

Multi Groove Bearing

This conventional bearing design has equi-spaced axial grooves to allow water to circulate and cool the bearing and to enable debris to pass through without causing damage to the shaft or bearing. This design is suitable for most vessels where shaft velocities are not high.

Twin Groove Bearing

This bearing has two large axial grooves at 90 degrees to the static shaft loading position and allows superior hydrodynamic performance over a wide range of shaft velocities. It was developed from testing Orkot® TLM Marine bearings on a purpose designed shaft testing rig. The design allows for a hydrodynamic film to develop at low shaft velocities reducing friction and wear. Good hydrodynamic performance is obtained with shaft velocities as low as 25 m/min. (82 ft/min). This design and may also be used for vertical shaft water pumps for marine use.

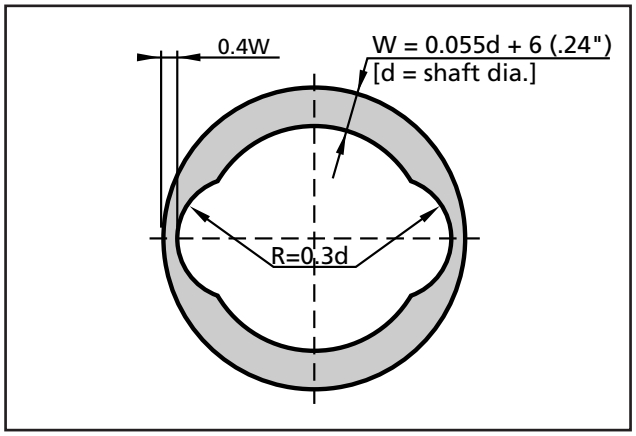

Figure 4: Twin Groove Bearing

Special Designs

Special designs for naval applications that incorporate partial arc segmental bearings mounted in split bronze housings are also available.

Staves

An alternative bearing design uses staves machined from Orkot® TLM Marine sheet or tubes. It should be noted that in refits the lignum vitae staves used in some vessels can be easily and more economically replaced with Orkot® TLM Marine multi-groove bearings. After removing the worn staves and keeper strips Orkot® bushes can be machined to suit the bronze carrier in the work shop or alternatively bored in situ.

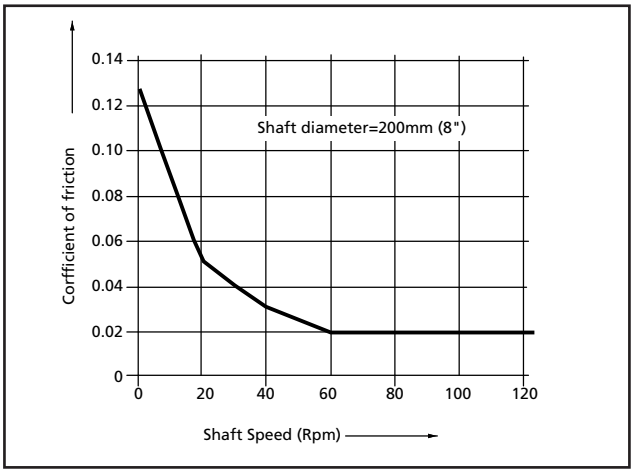

Figure 5: Coefficient of friction as a function of shaft speed.

Multi and twin groove designs can be manufactured as full or split bearings. Full bearings are normally fitted with an interference fit. This can be achieved by press fitting or freeze fitting. If more than one bearing is required to be fitted into a stern tube, care must be taken to ensure water grooves are in line.

Where multi piece bearings abut, a radial groove, similar in size to the bearings longitudinal grooves, should be machined in both bores at the abutment. These grooves ensure that an adequate water flow occurs even if the water grooves in the abutted bearings are not aligned correctly.

Split bearings should be assembled with an interference fit, if necessary this can be introduced using tapered keys.

Orkot® have developed various special split bearing designs for Naval applications.

The length to a diameter ratio of an Orkot® Marine grade stern tube bearing should be held to 2:1 if possible. Today the majority of classification societies allow this as longer bearings increase the problem of alignment. If classification rules require a longer bearing to be used it is suggested that the bearing clearance at the forward end for the additional length, above the 2:1 shaft to diameter ratio, should be increased to provide a safety bearing. This can reduce the risk of misalignment and is illustrated in figure 6.

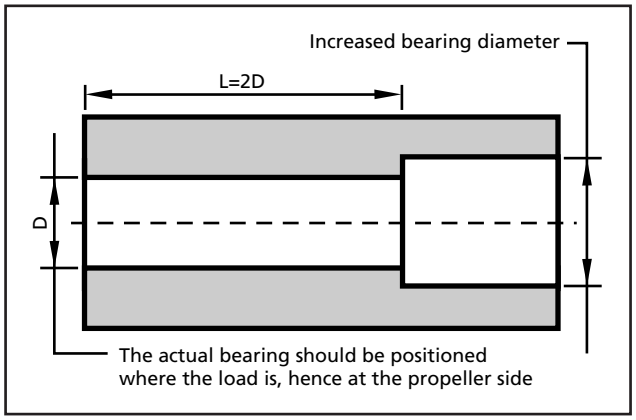

Figure 6: Long bearing with increased clearance "safety bearing"

Water Flow Rate

A water flow rate of 0.1 litres per minute per mm of shaft diameter is required or 0.66 US gallons per minute per inch of shaft diameter.

Bearing Interference and Clearance

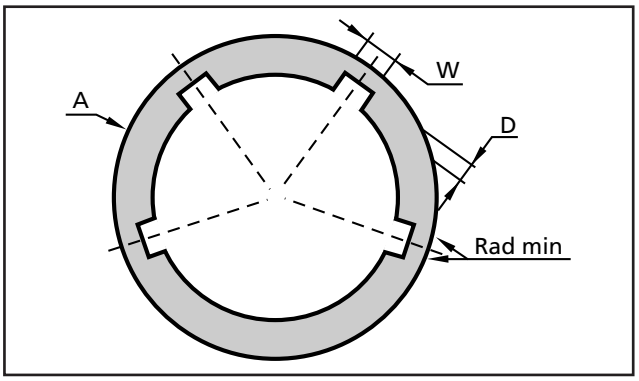

Figure 7: Multi groove bearing for 50 mm (2" Dia.) shaft with bottom groove omitted.

To simplify the bearing design sizes are tabulated.

*To improve shaft running the bottom (6 o'clock) groove should be omitted.

The wall thicknesses "A" indicated are the minimum recommended.

Bearing to have 3mm x 30° (1/8" x 30°) chamfer on O/D and I/D.

The Orkot® Marine Bearings calculation sheet can be used for stern tube calculations.

Warning: Please note that the Orkot® Marine Bearing calculation is set up as standard to calculate rudder bearing dimensions. As such the standard interference and clearance figures given must be changed to those stated in this section.

Table 10: Multi Groove Bearing in mm

Shaft Size	Min Wall Thickness A	Min Interference B	Min Shaft Clearance B	Number of Grooves	Groove Angle	Groove Width W	Groove Depth D
	mm	mm	mm		Degrees	mm	mm
30 - 60	8	0.15	0.30	4	72.0	8	4
60 - 100	9	0.22	0.41	5	60.0	8	4
100 - 150	10	0.34	0.52	6	51.4	10	6
150 - 200	12	0.43	0.63	7	45.0	10	6
200 - 250	14	0.56	0.74	8	40.0	12	7
250 - 300	14	0.70	0.85	9	36.0	12	7
300 - 350	16	0.84	0.96	10	32.7	14	8
350 - 400	16	0.97	1.07	11	30.0	14	8
400 - 450	20	1.11	1.18	12	27.7	16	10
450 - 500	20	1.25	1.29	13	25.7	16	10
500 - 550	22	1.40	1.40	14	24.0	18	11
550 - 600	22	1.50	1.51	15	22.5	18	11

Table 11: Multi Groove Bearing in inches

Shaft Size	Min Wall Thickness A	Min Interference B	Min Shaft Clearance B	Number of Grooves	Groove Angle	Groove Width W	Groove Depth D
inch	inch	inch	inch		Degrees	inch	inch
1.18 - 2.36	0.315	0.006	0.012	4	72	0.315	0.157
2.36 - 3.94	0.354	0.009	0.016	5	60	0.315	0.157
3.94 - 5.91	0.394	0.013	0.020	6	51.4	0.394	0.236
5.91 - 7.87	0.472	0.017	0.025	7	45	0.394	0.236
7.87 - 9.84	0.551	0.022	0.029	8	40	0.472	0.276
9.84 - 11.8	0.551	0.028	0.033	9	36	0.472	0.276
11.8 - 13.8	0.630	0.033	0.038	10	32.7	0.551	0.315
13.8 - 15.7	0.630	0.038	0.042	11	30	0.551	0.315
15.7 - 17.7	0.787	0.044	0.046	12	27.7	0.630	0.394
17.7 - 19.7	0.787	0.049	0.051	13	25.7	0.630	0.394
19.7 - 21.7	0.866	0.055	0.055	14	24	0.709	0.433
21.7 - 23.6	0.866	0.059	0.059	15	22.5	0.709	0.433

Machining Tolerance

The following tables show the machining tolerances Trelleborg Sealing Solutions machine shop can achieve when machining stern tube bearings. These can be substituted in the calculation with your own machining tolerance should they differ from those stated.

Warning: Please note that the Orkot® Marine Bearing calculation is set up as standard to calculate rudder bearing dimensions. As such the standard machining tolerance figures given must be changed to those stated in this section.

Once machining tolerance values have been selected they can be entered into the Marine Bearing Calculation. All of the required element of the calculation should now be in place and the final figures can now be calculated.

Table 12: Recommended Machining Tolerance OD and ID for Orkot® Propeller Shaft Bearings

Diameter OD and ID mm	Tolerance Band mm
1 - 100	0.10
101 - 300	0.20
301 - 500	0.30
501 - 900	0.40

Table 13

Diameter OD and ID inches	Tolerance Band inches
0 - 4	0.004
4 - 12	0.008
12 - 20	0.012
20 - 36	0.016

Note:

1. These tolerances are for guidance only, reducing them will reduce the maximum clearance after fitting. It is important that roundness tolerance is maintained when chocking compounds are used.
2. Propeller shaft bearings are longer than rudder bearings; longer lengths require larger tolerances.

Fitting Methods

Orkot® Marine Bearings can be fitted using any one of the following methods:

- Freeze fitting
  - Method 1: Using liquid nitrogen (immersion method)
  - Method 2: Using liquid nitrogen (vapour method)
  - Method 3: Using dry ice and alcohol
- Press fitting
- Bonding

Our preferred method is to freeze fit using liquid nitrogen. However descriptions of all methods can be found in this section.

Freeze Fitting

This is a fast and efficient assembly method for an Orkot® Marine bearing. The thermal properties of the material allow a good clearance between the bearing and housing when frozen and the material does not become brittle at cryogenic temperatures.

Note:

Extreme care should be taken when using liquid nitrogen to avoid severe burns. Adequate ventilation should be provided because oxygen is depleted when gassing occurs in confined spaces, suppliers of the products will provide a data sheet advising on its use.

Method 1:

Using liquid nitrogen (immersion method)

A suggested procedure for method 1 is as follows:

1. Check the od of the bearing in at least 3 positions around the top, middle and bottom (a total of 9 measurements) making a note of the largest figure recorded.
2. Check the id of the housing in at least 3 positions around the top, middle and bottom (a total of 9 measurements) making a note of the smallest figure recorded.
3. Provide an insulated container capable of withstanding a temperature of -197°C (-320°F) and large enough to accommodate the bearing being fitted with enough clearance on the od to facilitate the insertion and removal of the bearing.
4. Place the bearing inside the container and make efforts to reduce its internal volume. This can be done by sealing off un-used areas of the container or filling any voids with rough cut timbers. This will reduce the amount of liquid nitrogen that will be required.
5. Cover the bearing with the liquid nitrogen and maintain this level for the duration of the procedure. The nitrogen level will constantly drop as the liquid boils, turns to gas and escapes to the atmosphere. Use an insulated lid to cover the container when possible. Once the liquid stops boiling and settles down to a simmer then the bearing can be lifted slightly from the liquid and the upper od measured to check for sufficient size reduction. If this has not been achieved then the bearing can be returned to the liquid for 10 to 20 minutes and then checked again
6. Once sufficient clearance between the bearing and the housing has been achieved then the bearing can be removed from the nitrogen and transported to the housing for fitting.
7. The apparatus used to transport the bearing after freezing will need to be resistant to the cryogenic temperatures they will encounter (e.g. polyester slings) and suitable to support the weights involved.
8. Ensure that the reduced bearing can be located quickly and easily. Once it comes into contact with any conductive surfaces the rate with which it will return to its original dimensions increases greatly.
9. Slide the bearing into position, ensuring that it is held there while its temperature normalises. Once the bearings surfaces have cleared of the ice that forms on them during normalisation then any supports can be removed.

Method 2:

Using liquid nitrogen (vapour method)

Orkot® bearings can be fitted without a metal container by vaporising the liquid nitrogen within the bearing. This uses less liquid nitrogen and is therefore safer and less expensive than the immersion method. Please note however that the rate of bearing contraction is a lot lower using this method when compared to the immersion method. As such the freezing procedure will take a lot longer

A suggested procedure for method 2 is as follows:

1. Check the od of the bearing in at least 3 positions around the top, middle and bottom (a total of 9 measurements) making a note of the largest figure recorded.
2. Check the id of the housing in at least 3 positions around the top, middle and bottom (a total of 9 measurements) making a note of the smallest figure recorded.
3. Prepare a plywood disk with an od half way between that of the od and the id of the bearing. Drill a 15 / 20mm diameter hole in the middle of this disk.
4. Place the bearing on a smooth, flat, none porous surface. Seal the joint between this and the id of the bearing with silicone sealant.

5. Manufacture a simple lance from 10 mm (.40") or similar copper tube, drill approximately twenty 1 mm (.40") diameter holes through both walls of the pipe and fit a bleed valve to the pipe to control the flow of liquid nitrogen. Ensure that you seal the open end of the lance.
6. Place the plywood disk on top of the bearing, and connect the lance to a pressurised liquid nitrogen tank.
7. Turn the valves to control the flow on nitrogen until vapour can be seen escaping under pressure from the lance. If liquid starts to exit the lance then the flow should be reduced until it stops.
8. Place the lance though the hole in the centre of the disk and into the bearing. Wrap the bearing in an insulating blanket to reduce energy loss from its surface.
9. During the procedure the nitrogen flow will need to be monitored and adjusted from time to time. Measure the od at the top of the bearing periodically.
10. Once sufficient clearance between the bearing and the housing has been achieved then the bearing can be transported to the housing for fitting.
11. The apparatus used to transport the bearing after freezing will need to be resistant to the cryogenic temperatures they will encounter (e.g. polyester slings) and suitable to support the weights involved.
12. Ensure that the reduced bearing can be located quickly and easily. Once it comes into contact with any conductive surfaces the rate with which it will return to its original dimensions increases greatly.
13. Slide the bearing into position, ensuring that it is held there while its temperature normalises. Once the bearings surfaces have cleared of the ice that forms on them during normalisation then any supports can be removed.

Method 3:

Using dry ice and alcohol

Freeze fitting using dry ice and alcohol will only provide the required clearance when using very light interferences. As such it is rarely a viable method in its own right and will often also require press fitting

Fitting with Hydraulic Press or Centre Pull Jacks

If a bearing is to be press fitted, installers should ensure that they have equipment available to deliver adequate force to press the bearing fully into the housing. The ease of fitting will vary dependent on the finish of the housing and this should be considered when calculating the force required. When press fitting a bearing it is important that it is in line and square with the bore before the operation beings, an adequate chamfer on the housing will prevent shaving of the bush.

The diagram (Figure 8) illustrates a method of ensuring the bush is square before the fitting starts.

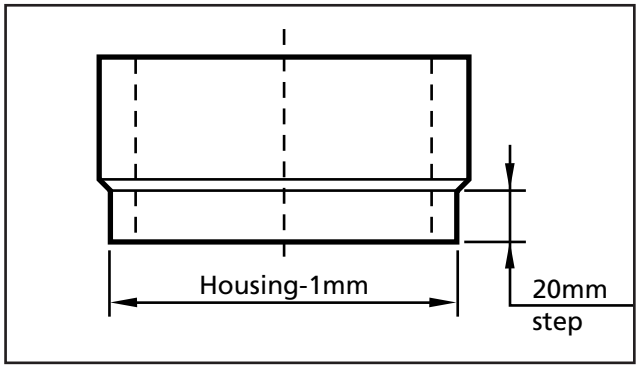

Figure 8: Method of ensuring the bush is square before the fitting starts.

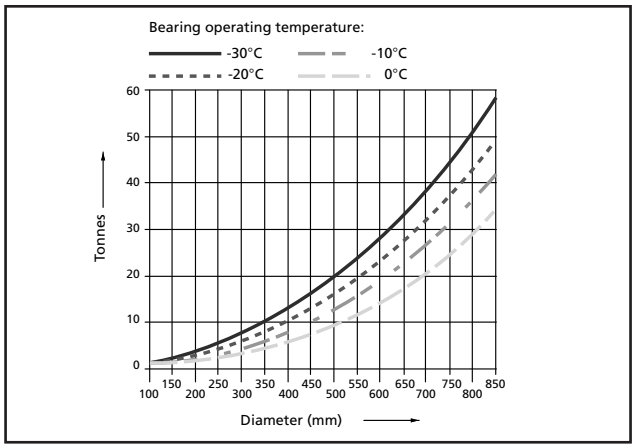

Figure 9: Fitting force (Tonnes)

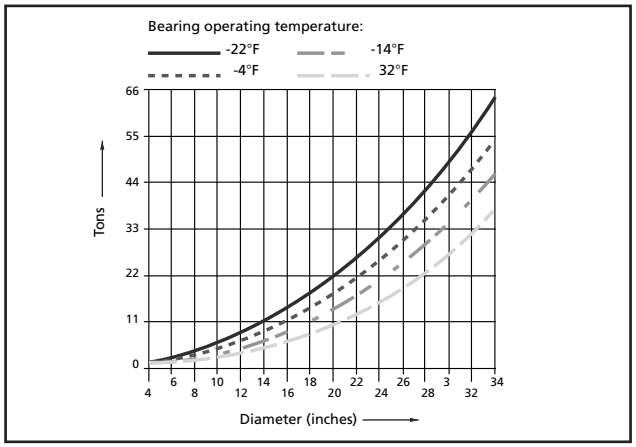

Figure 10: Fitting force (Tons)

Figures 9 and 10 show the typical fitting force of a bearing, length/diameter ratio 1:1

An initial force to move the bearing may be higher than given in the graph

The actual force will vary dependent on the condition of the housing, leading chamfers and the length/ diameter ratio.

Bonding

The method of fixture will depend upon the design employed, however the key point to be emphasised here is that in addition to traditional mechanical fixing, Orkot® materials can be bonded to both itself and metallic substrates. Please note that if the assembly is to experience in excess of 60-70°C then interference fitting should be replaced with adhesive bonding.

Numerous adhesives are compatible with Orkot® and have been tested within our laboratory facilities.

Generally the most suitable adhesives are:

- Epoxies.
- Acrylics .
- Cyanoacrylates.
- Polyurethanes.

The following is a list of adhesive suppliers whose products have been tested and are approved for use with Orkot® materials:

- Araldite®
- Belzona®
- Bisonite®
- Chockfast®
- Loctite®
- Permabond®

For specific details of bonding agents and conditions please contact our Technical department.

General terms and preparations are required irrespective of the adhesive to be used.

Terms:

- The bonding agent is referred to as the adhesive.
- The material/surface to which the Orkot® is to be bonded is the substrate.
- The distance between the Orkot® and the substrate is the gap.
- The ability of the adhesive to bridge and fill the gap is the gap fill.

Preparations:

- Suitable substrates are Orkot® materials themselves and various metals (including stainless steel).
- Plastics such as polyethylene, polypropylene, polycarbonate, PVC, PTFE are unsuitable substrates for bonding to Orkot® materials.
- The key to effective adhesion is in the preparation of the substrate and the material to be bonded.
- Ensure no boundary layers such as oxides or grease are present. Degrease with a suitable solvent ensuring local health and safety guidelines are followed. Orkot® can be degreased by using a quick wipe with a solvent such as acetone, but exposure to the solvent must be kept brief so as not to attack the Orkot® material. Oxides can be removed by use of fine abrasive paper or wire wool.
- Roughen the surface. Ideally where metals are involved use shot blasting. Ensure any remaining particulates are removed from the surface. Generally the slightly fibrous surface of Orkot® does not require roughening, though the use of abrasive paper is acceptable so long as any dust is removed.
- The assembled components may need support while the adhesive sets. This cure time will vary with the conditions under which the adhesive is used. Typically a rule of thumb is that the cure time will half for every 10°C increase in temperature.
- In terms of assembly, avoid butt joints in favour of lap, so that loads applied to the adhesive joint will act across the assembly in shear.

Machining Instructions

General

Orkot® materials are readily machinable by conventional machine shop techniques. As a general guide, methods used for brass, aluminium or lignum vitae will apply for Orkot® materials. It is preferable to use tungsten carbide turning tools with cutting speeds of 5.5 metres (19 feet) per second. Orkot® materials must be machined dry without the use of coolant.

Turning

Tungsten carbide tooling of the butt welded type using K20 grade carbide is suitable for most applications. If carbide inserts are used, then aluminium grades with high positive rates give best results e.g. Plansee grade H10T, Sandvik H10A or H13A, Mitsubishi HTI10.

For heavy wall thickness, the internal and external diameters should be machined together to reduce vibration.

No asbestos is used in the manufacturing of Orkot® Marine and the material is completely non toxic. It is however advisable to use adequate dust extraction when machining. If unavailable, operators should wear dust particle masks.

For small volume work and machining of chamfers, radii and other forms, then high speed steel gives good results, but tool life is shorter than with tungsten carbide.

Cutting Angle for Tools

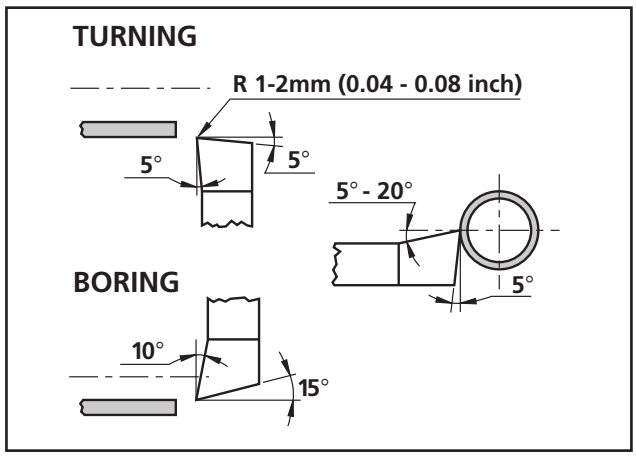

Figure 11: Turning and boring

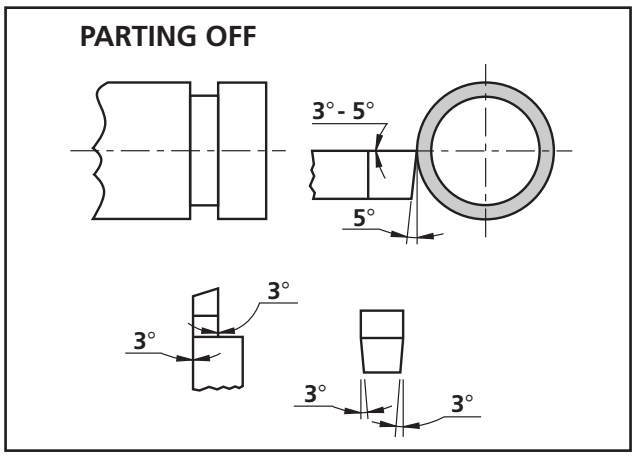

Figure 12: Parting off

Table 14: Speeds in mm

Diameter (mm)	Rpm
0 - 50	2100
50 - 100	1000
100 - 150	700
150 - 200	550
200 - 300	350
300 - 400	250
400 - 500	200
500 - 600	175
600 - 700	150
700 - 800	130
800 - 900	120
900 - 1000	100

Table 15: Speeds in inches

Diameter (inch)	Rpm
0 - 2	2100
2 - 4	1000
4 - 6	700
6 - 8	550
8 - 12	350
12 - 16	250
16 - 20	200
20 - 24	175
24 - 28	150
28 - 32	130
32 - 36	120
36 - 40	100

Table 16: Feed Rates in mm

Type of machining	Roughing	Finishing	Unit
Turning	0.7	0.25	mm/rev
Boring	0.5	0.20	mm/rev
Parting	0.4	0.20	mm/rev

Table 17: Feed Rates in inches

Type of machining	Roughing	Finishing	Unit
Turning	0.028	0.010	inch/rev
Boring	0.020	0.008	inch/rev
Parting	0.016	0.008	inch/rev

Grooving

Orkot® materials can be readily grooved on a lathe, shaping, milling or boring machine with a 90 degree machining head. For most one off applications a lathe is adequate. A sharp high speed steel tool ground to the correct form should be clamped in a long boring bar with a three degree clearance ground on the side of the tool. No top clearance is required.

The chuck may be marked for the correctly spaced number of grooves and each groove shaped in turn. A 0.2 mm (0.008") depth of cut should be used, for long bearings a steady may be required. The machine fast traverse, (with the spindle locked) can often be used. Linear speeds up to 10 m/min or 30 feet/min can be achieved.

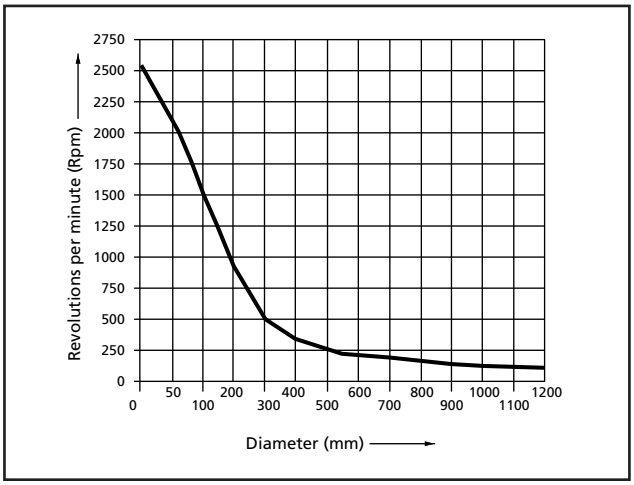

Figure 13: Machining Speeds as a function of Rpm and diameter (mm)

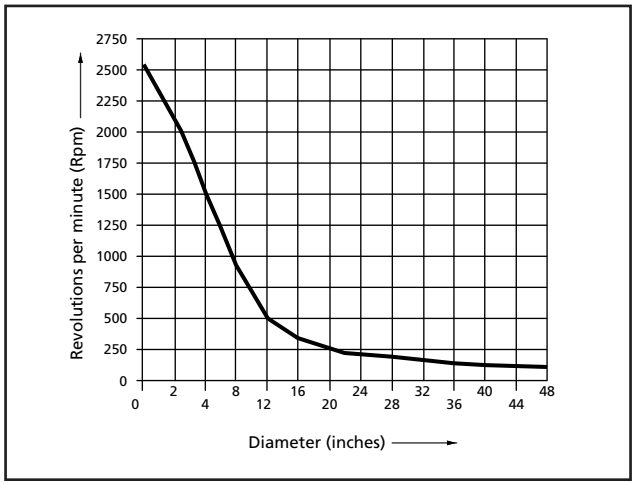

Figure 14: Machining Speeds as a function of Rpm and diameter (inches)

Drilling

Orkot® materials are easily drilled using either conventional high speed steel or carbide tipped drills.

The following speed and feeds are suggested:

Table 18: Speeds and Feeds by Drilling

Drill Diameter mm	Speed Rpm	Feed mm/min
5	1600	300
10	800	400
15	600	400
20	400	400
25	350	400
30	300	400

Table 19: Speeds and Feeds by Drilling

Drill Diameter inch	Speed Rpm	Feed inch/min
0.2	1600	12
0.4	800	16
0.6	600	16
0.8	400	16
1.0	350	16
1.2	300	16

Depth of Cut

Roughing 10mm or 0.4inch
Finishing 3mm or 0.12inch

Smaller cuts may lead to tools rubbing, causing wear which produces excessive heat build up in the finished part.

Health and Safety Data

1. PRODUCT AND COMPANY IDENTIFICATION

Product name	:	'Orkot®	
Suppliers	:	Trelleborg Sealing Solutions Rotherham	Trelleborg Sealing Solutions Eugene
		Bradmarsh Business Park	2535 Prairie Road
		Rotherham	Eugene
		S60 1BX	Oregon, 97402
		United Kingdom	USA
Emergency telephone number	:	+44 1709 789800	+1 541 688 5529

2. COMPOSITION / INFORMATION ON INGREDIENTS

General Description	:	Fibre reinforced plastic material
Information on ingredients	:	May contain – Polyester/aramid fibres, polyester/epoxy resin, ptfe, molybdenum disulphide, graphite, calcium carbonate

3. HAZARDS IDENTIFICATION

Physical/chemical hazards	:	None known
Human health hazards	:	None known, avoid breathing machining dust

4. FIRST-AID MEASURES

Inhalation	:	Fresh air, seek medical advice if irritation develops
Ingestion	:	Wash out mouth with water, seek medical advice
Skin contact	:	Not applicable
Eye contact	:	Irrigate with appropriate eye wash

5. FIRE-FIGHTING MEASURES

Suitable extinguishing media	:	Water, foam, carbon dioxide, dry powder
Not Suitable extinguishing media	:	Not applicable
Hazardous decomposition products	:	Carbon, carbon oxides
Protection of fire fighters	:	Use breathing apparatus

6. ACCIDENTAL RELEASE MEASURES

Personal precautions	:	Filter mask for dust (machining)
Environmental precautions	:	Avoid dispersion of dust (machining)
Methods for cleaning up	:	Transfer into suitable containers for disposal

7. HANDLING AND STORAGE

Handling	:	Observe good industrial safety and hygiene practice.
Storage	:	Store in a cool, dry place out of direct sunlight
Recommended packaging	:	Paper, card, plastics, wood

8. EXPOSURE CONTROLS / PERSONAL PROTECTION

Engineering measures	:	When machining use local exhaust ventilation. Collect dust for disposal Machined swarf is flammable
Hygiene measures	:	Avoid breathing machined dust.
Occupational exposure limits		
Chemical name	:	Dust
OEL (UK)	:	< 10 mg/m³ 8 hour TWA tot. inhalable dust < 5 mg/m³ 8 hour respirable dust
Personal protective equipment		
Respiratory system	:	Dust mask, type FFP1 minimum
Skin and body	:	Work clothing
Hands	:	Not applicable
Eyes	:	Safety goggles when machining
Other protective equipment	:	Not applicable

9. PHYSICAL AND CHEMICAL PROPERTIES

Physical state	:	Solid
Colour	:	Variable – white, black, grey, blue, turquoise, green (compound dependent)
Odour	:	Weak, characteristic
Melting point	:	Does not melt
Bulk density	:	1200 – 1450 kg/m³
Solubility in water	:	Insoluble
pH	:	Not applicable
Flash point	:	Not applicable
Explosion properties	:	As with all dusts a risk of explosion exists in Restricted environments

10. STABILITY AND REACTIVITY

Stability	:	Stable
Conditions to avoid	:	None known
Materials to avoid	:	None known
Hazardous reactions	:	None known
Hazardous decomposition products	:	Decomposition does not occur under recommended storage and handling

11. TOXICOLOGICAL INFORMATION

Inhalation	:	Inhalation of dust may cause irritation to respiratory tract
Acute toxicity – Oral	:	None known
Skin irritation	:	None known
Eye irritation	:	Dust may cause irritation
Other information	:	No know toxicological effects are associated with this material

12. ECOLOGICAL INFORMATION

Persistence/degradability	:	This material is not readily biodegradable
Ecotoxicity	:	No known ecotoxicity exists
Other information	:	Not applicable

13. DISPOSAL CONSIDERATIONS

Waste of residues	:	Disposal in accordance with national and local regulations
Contaminated packaging	:	Packaging can be recycled Cleaning agent - water

14. TRANSPORT INFORMATION

National transport regulations (UK)	:	Not applicable

15. REGULATORY INFORMATION

Classification according to EU Regulations 67/548/EEC-88/379/EEC	:	This product does not have to be classified
Safety phrases	:	Avoid breathing machining dust
Contains	:	Not applicable
National regulations		
United Kingdom	:	No additional national regulations are known to the supplier

16. OTHER INFORMATION

This safety data sheet is based on Trellborg Sealing Solutions present knowledge and experience, and is intended to serve as a guide for safe handling of the product regarding to health and environmental aspects.

The information given in this data sheet was obtained from sources we believe are reliable. The information is, however, provided without any representation or warranty, expressed or implied, regarding its accuracy or correctness.

The conditions or methods of handling, storage, use and disposal of the product are beyond our control and may be beyond our knowledge. For this, and other reasons, we do not assume responsibility and expressly disclaim liability for loss, damage or expense arising out of or in any way connected with the handling, storage, use or disposal of the product.

Rudder / Stern Shaft Bearing Calculation

Trelleborg Sealing Solutions (UK), Bradmarsh Business Park, Rotherham, S60 1BX
Phone: +44 1709 789828 Fax: +44 1709 789802. E-mail: enquiries@orkotmarine.com

Company :		Date :	
Contact :		Phone :	
Vessel Name :		Fax :	
Reference Number :		Application:	

All measurments are in mm unless otherwise stated.

Housing I/D Max (mm)		Shaft O/D Max (mm)	
Housing I/D Min (mm)		Shaft O/D Min (mm)	
Operating Temp (Degrees C)		Machining Temp (Degrees C)	
Calculation Checks		Clearance Recommended by Some Classification Societies	
OK		Min Clearance Recommended by Orkot Ltd	
OK			
Min Interference (mm) *		Min Clearance (mm) * (Mean of Above)	
Manual Overide		**Manual Overide**	
M/C Tolerance (O/D) (mm) **		M/C Tolerance (I/D) (mm) **	
Manual Overide		**Manual Overide**	

(A) Housing I/D Max + Interference Min = Bearing O/D Min (A)

\+ =

(B) Bearing O/D Min (A) + M/C Tolerance (O/D) = Bearing O/D Max (B)

\+ =

(C) Shaft O/D Max + [Bearing O/D Max (B) - Housing I/D Min] + Min Clearance = Bearing I/D Min (C)

\+ [-] + =

(D) Bearing I/D Min (C) + M/C Tolerance (I/D) = Bearing I/D Max (D)

\+ =

(E) Bearing I/D Min (C) - [Bearing O/D Max (B) - Housing I/D Min] = Bearing I/D Fitted Min (E)

\- [-] =

(F) Bearing I/D Max (D) -[Bearing O/D Min (A) - Housing I/D Max] = Bearing I/D Fitted Max (F)

\- [-] =

(G) Fitted Bush I/D Min (E) - Shaft O/D Max = Fitted Clearance Min (G)

\- =

(H) Fitted Bush Max (F) - Shaft O/D Min = Fitted Clearance Max (H)

\- =

* These automatic figures are the standard clearances and interference's for Orkot rudder® bearings and can be overriden in the boxes provided if required
For Stern tube bearings override these with the figures shown on page 16 of Orkot's® Engineering Manual (v 3.2)

** These figures apply to Orkot's® machining processes. If your process tolerances are different then override them in the box provided.

Copyright Trelleborg Sealing Solutions UK Ltd. 2007
This information is confidential and is supplied on the express condition that it shall not be lent or copied or reproduced or disclosed to any other person in whole or in part without the written permission of Trelleborg Sealing Solutions (UK), Bradmarsh Business Park, Rotherham, U.K.

Trelleborg Sealing Solutions (UK), Bradmarsh Business Park, Rotherham, S601BX, England.
Phone: ++44 (0)1709 789828. Fax: ++44 (0)1709 789802. 24hr Emergency Line: ++44 (0)1709 789840

Rudder / Stern Shaft Bearing Calculation

Trelleborg Sealing Solutions (UK), Bradmarsh Business Park, Rotherham, S60 1BX
Phone: +44 1709 789828 Fax: +44 1709 789802. E-mail: enquiries@orkotmarine.com

Company :	Orkot Marine Bearings	Date :	10-Jan-07
Contact :	AN Other	Phone :	
Vessel Name :		Fax :	
Reference Number :		Application:	Rudder Bearing Example

All measurments are in mm unless otherwise stated.

Housing I/D Max (mm)	550.120
Housing I/D Min (mm)	550.050

Shaft O/D Max (mm)	500.030
Shaft O/D Min (mm)	499.980

Operating Temp (Degrees C)	-10

Machining Temp (Degrees C)	20

Calculation Checks
OK
OK

Clearance Recommended by Some Classification Societies	2.00
Min Clearance Recommended by Orkot Ltd	1.10

Min Interference (mm) *	1.38
Manual Overide	1.38

Min Clearance (mm) * (Mean of Above)	1.55
Manual Overide	1.55

M/C Tolerance (O/D) (mm) **	0.25
Manual Overide	0.25

M/C Tolerance (I/D) (mm) **	0.25
Manual Overide	0.25

(A) Housing I/D Max + Interference Min = Bearing O/D Min (A)

550.12 + 1.38 = **551.50**

(B) Bearing O/D Min (A) + M/C Tolerance (O/D) = Bearing O/D Max (B)

551.50 + 0.25 = **551.75**

(C) Shaft O/D Max + [Bearing O/D Max (B) - Housing I/D Min] + Min Clearance = Bearing I/D Min (C)

500.03 + [551.75 - 550.05] + 1.55 = **503.28**

(D) Bearing I/D Min (C) + M/C Tolerance (I/D) = Bearing I/D Max (D)

503.28 + 0.25 = **503.53**

(E) Bearing I/D Min (C) - [Bearing O/D Max (B) - Housing I/D Min] = Bearing I/D Fitted Min (E)

503.28 - [551.75 - 550.05] = **501.58**

(F) Bearing I/D Max (D) -[Bearing O/D Min (A) - Housing I/D Max] = Bearing I/D Fitted Max (F)

503.53 - [551.50 - 550.12] = **502.15**

(G) Fitted Bush I/D Min (E) - Shaft O/D Max = Fitted Clearance Min (G)

501.58 - 500.03 = **1.55**

(H) Fitted Bush Max (F) - Shaft O/D Min = Fitted Clearance Max (H)

502.15 - 499.98 = **2.17**

* These automatic figures are the standard clearances and interference's for Orkot rudder® bearings and can be overriden in the boxes provided if required
For Stern tube bearings override these with the figures shown on page 16 of Orkot's® Engineering Manual (v 3.2)

** These figures apply to Orkot's® machining processes. If your process tolerances are different then override them in the box provided.

Copyright Trelleborg Sealing Solutions UK Ltd. 2007
This information is confidential and is supplied on the express condition that it shall not be lent or copied or reproduced or disclosed to any other person in whole or in part without the written permission of Trelleborg Sealing Solutions (UK), Bradmarsh Business Park, Rotherham, U.K.

Trelleborg Sealing Solutions (UK), Bradmarsh Business Park, Rotherham, S601BX, England.
Phone: ++44 (0)1709 789828. Fax: ++44 (0)1709 789802. 24hr Emergency Line: ++44 (0)1709 789840

Rudder / Stern Shaft Bearing Calculation

Trelleborg Sealing Solutions (UK), Bradmarsh Business Park, Rotherham, S60 1BX
Phone: +44 1709 789828 Fax: +44 1709 789802. E-mail: enquiries@orkotmarine.com

Company :	Orkot Marine Bearings	Date :	
Contact :		Phone :	
Vessel Name :		Fax :	
Reference Number :		Application:	Stern Tube Bearing Example

All measurments are in mm unless otherwise stated.

Housing I/D Max (mm)	252.450	Shaft O/D Max (mm)	198.940
Housing I/D Min (mm)	252.320	Shaft O/D Min (mm)	198.850
Operating Temp (Degrees C)	-10	Machining Temp (Degrees C)	20

Calculation Checks
OK
OK

		Clearance Recommended by Some Classification Societies	1.40
		Min Clearance Recommended by Orkot Ltd	0.50
Min Interference (mm) *	0.56	Min Clearance (mm) * (Mean of Above)	0.95
Manual Overide	0.43	**Manual Overide**	0.63
M/C Tolerance (O/D) (mm) **	0.15	M/C Tolerance (I/D) (mm) **	0.15
Manual Overide	0.20	**Manual Overide**	0.20

(A) Housing I/D Max + Interference Min = Bearing O/D Min (A)

252.45 + 0.43 = **252.88**

(B) Bearing O/D Min (A) + M/C Tolerance (O/D) = Bearing O/D Max (B)

252.88 + 0.20 = **253.08**

(C) Shaft O/D Max + [Bearing O/D Max (B) - Housing I/D Min] + Min Clearance = Bearing I/D Min (C)

198.94 + [253.08 - 252.32] + 0.63 = **200.33**

(D) Bearing I/D Min (C) + M/C Tolerance (I/D) = Bearing I/D Max (D)

200.33 + 0.20 = **200.53**

(E) Bearing I/D Min (C) - [Bearing O/D Max (B) - Housing I/D Min] = Bearing I/D Fitted Min (E)

200.33 - [253.08 - 252.32] = **199.57**

(F) Bearing I/D Max (D) -[Bearing O/D Min (A) - Housing I/D Max] = Bearing I/D Fitted Max (F)

200.53 - [252.88 - 252.45] = **200.10**

(G) Fitted Bush I/D Min (E) - Shaft O/D Max = Fitted Clearance Min (G)

199.57 - 198.94 = **0.63**

(H) Fitted Bush Max (F) - Shaft O/D Min = Fitted Clearance Max (H)

200.10 - 198.85 = **1.25**

* These automatic figures are the standard clearances and interference's for Orkot rudder® bearings and can be overriden in the boxes provided if required
For Stern tube bearings override these with the figures shown on page 16 of Orkot's® Engineering Manual (v 3.2)

** These figures apply to Orkot's® machining processes. If your process tolerances are different then override them in the box provided.

Copyright Trelleborg Sealing Solutions UK Ltd. 2007
This information is confidential and is supplied on the express condition that it shall not be lent or copied or reproduced or disclosed to any other person in whole or in part without the written permission of Trelleborg Sealing Solutions (UK), Bradmarsh Business Park, Rotherham, U.K.

Trelleborg Sealing Solutions (UK), Bradmarsh Business Park, Rotherham, S601BX, England.
Phone: ++44 (0)1709 789828. Fax: ++44 (0)1709 789802. 24hr Emergency Line: ++44 (0)1709 789840

This information in this manual is based on many years of experience in the manufacture and application of Orkot® products. However, unknown parameters and conditions may restrict general statements during usage. It is vital that customers satisfy themselves as to the suitability of individual products through adequate testing. For this reason, and due to the wide range of applications of our products, Trelleborg Sealing Solutions UK Ltd can accept no liability as to the suitability or correctness of our general recommendations in individual cases. For specific operating conditions please consult your Trelleborg Sealing Solutions representative.

The application limits for pressure, temperature and speed given in this catalogue are maximum values determined in the laboratory. During practical applications it should be remembered that due to the interaction of the operating parameters, the maximum values must be set correspondingly lower. For exceptional operating conditions, please contact us.

This edition supersedes all previous brochures.

© Trelleborg Sealing Solutions UK Ltd. All rights reserved.
This brochure, or any part thereof, may not be reproduced without our permission.

Non Trelleborg Sealing Solutions UK Ltd trade marks are referred to for technical advice only and do not express any preference to the use of these products. The genuine rights and liability of the owners of these trade marks are applicable.

Araldite® is a trade mark of Ciba-Geigy.
Bisonite® is a trade mark of the Bolton Group.
Belzona® is a trade mark of Belzona Molocular Ltd.
Chockfast® is a trade mark of ITW Philadelphia Resins Corporation.
Epocast® is a trade mark of Springer Marine+Industrial Services GmbH
Inconel® is a trade mark of INCO Alloys International, Inc.
Loctite® is a trade mark of Loctite Corporation.
Orkot® is a trade mark of Trelleborg Sealing Solutions (UK) Ltd.
Permabond® a trade mark of Permabond Europe, a division of National Starch & Chemical.
Stellite® is a trade mark of Deloro Stellite.

For further information visit: **www.orkotmarine.com**

Global Head Office

Trelleborg Sealing Solutions Rotherham
Bradmarsh Business Park
Rotherham
S60 1BX
United Kingdom

Tel: +44 (0)1709 789 828
Fax: +44 (0)1709 789 802
Email: enquiries@orkotmarine.com
24 Hour Emergency Line: +44 (0)1709 789 840

North & South America

Trelleborg Sealing Solutions Eugene
2535 Prairie Road
Eugene
Oregon, 97402
USA

Tel: +1 (541) 688 5529
Fax: +1 (541) 688 2079
Email: enquiries.americas@orkotmarine.com
24 Hour Emergency Line: +1 (800) 546 7568

TRELLEBORG
SEALING SOLUTIONS

The information in this brochure is based on many years of experience in the manufacture and application of Orkot® products. However, unknown parameters and conditions may restrict general statements during usage. It is vital that customers satisfy themselves as to the suitability of individual products through adequate testing. For this reason, and due to the wide range of applications of our products, Trelleborg Sealing Solutions UK Ltd can accept no liability as to the suitability or correctness of our general recommendations in individual cases. For specific operating conditions please consult your technical representative. Orkot® is a registered trade mark of Trelleborg Sealing Solutions UK Ltd.

© Trelleborg Sealing Solutions UK Ltd 2007 designed & produced by visualsource.co.uk

b-orkot-engman-june07

THE JAMES LEFFEL & CO.

Manufactures of

HYDRAULIC TURBINES

1978 Commerce Circle—Springfield, Ohio USA 45504-2012

Phone (937) 322-0116 Telefax (937) 322-0467

SECTION 6

THE JAMES LEFFEL & CO.

Manufactures of

HYDRAULIC TURBINES

1978 Commerce Circle—Springfield, Ohio USA 45504-2012

Phone (937) 322-0116 Telefax (937) 322-0467

SECTION 6

SPARE PARTS LIST

SPARE PARTS per Contract Requirement

1 pc	54117-2	Turbine Shaft Packing Sleeve
16 pc	54120-1	Gate Links w/Bushings
16 pc	54100-10	Wicket Gate Packing Ring Sets (3 Rings per Set)

THE JAMES LEFFEL & CO.

Manufactures of

HYDRAULIC TURBINES

1978 Commerce Circle—Springfield, Ohio USA 45504-2012

Phone (937) 322-0116 Telefax (937) 322-0467

SECTION 7

THE JAMES LEFFEL & CO.
Manufactures of
HYDRAULIC TURBINES
1978 Commerce Circle—Springfield, Ohio USA 45504-2012
Phone (937) 322-0116 Telefax (937) 322-0467

SECTION 7

REFURBISHMENT DRAWINGS

The following page lists the refurbishment drawings for both the turbine and pump. These drawings provide a thorough representation of the refurbishment work of which reduced copies are included in this section.

It should be noted these drawings generally only address the refurbishment work, therefore the original drawings should be consulted as needed for further clarification and information.

Drawings in this section are 50% reduced.

THE JAMES LEFFEL & CO.

Manufactures of

HYDRAULIC TURBINES

1978 Commerce Circle—Springfield, Ohio USA 45504-2012

Phone (937) 322-0116 Telefax (937) 322-0467

DRAWING LIST

Turbine Drawings

54100	ASSEMBLY SECTION and END VIEW, REFURBISHED TURBINE
54101	SPIRAL CASE REFURBISHMENT WORK
54102	HEAD COVER with NEW THRUST PLATE- REFURBISHMENT
54103	BOTTOM RING- FINISH MACHINE
54104	PACKING BOX- NEW, for MAIN SHAFT- CAST and MACHINE
54105	TURBINE SHAFT- NEW and TURBINE SHAFT SLEEVE INSTALL
54106	GATE OPERATING LINKAGE, LEVER ARM and SUPPORT
54109	28-1/2" LL RUNNER and CONE- NEW- CAST and MACHINE
54110	GATE OPERATING RING REFURBISHMENTWORK
54111	TURBINE INBOARD BEARING REBABBITT REFURBISHMENT
54112	BEARING PEDESTAL TURBINE INBOARD BEARING REFURB
54113	TURBINE OUTBOARD BEARING REBABBITT REFURBISHMENT
54114	BEARING PEDESTAL TURBINE OUTBOARD BEARING REFURB
54117	TURBINE SHAFT SLEEVE ONE NEW and ONE FINISH EXISTING
54118	GATE OPERATING LINKAGE, WICKET GATE-ALTER
54120	SPARE GATE LINKS and REPAINT SUPPLIED LINKS
54218	RUNNER STUDS (NEW) and NUTS

Pump Drawings

54122	EXTENSION CONE DIFFUSER REHAB
54124	PROPELLER SUPPORT RING REFURBISHMENT
54192	PUMP SHAFT WITH SLEEVE FORGE and MACHINE
54193	EXTENSION SHAFT WITH SLEEVE- REFURB EXISTING
54199	COUPLING STUDS/NUTS, PUMP & GEARBOX SHAFTING
54221	PUMP PROPELLERREFURBISHMENT
54225	UPPER BEARING VERTICAL PROPELLER PUMP REFURB
54226	LOWER BEARING VERTICAL PROPELLER PUMP REFURB
54230	PUMP PROPELLER BLADE TIP DIAMETER REPAIR

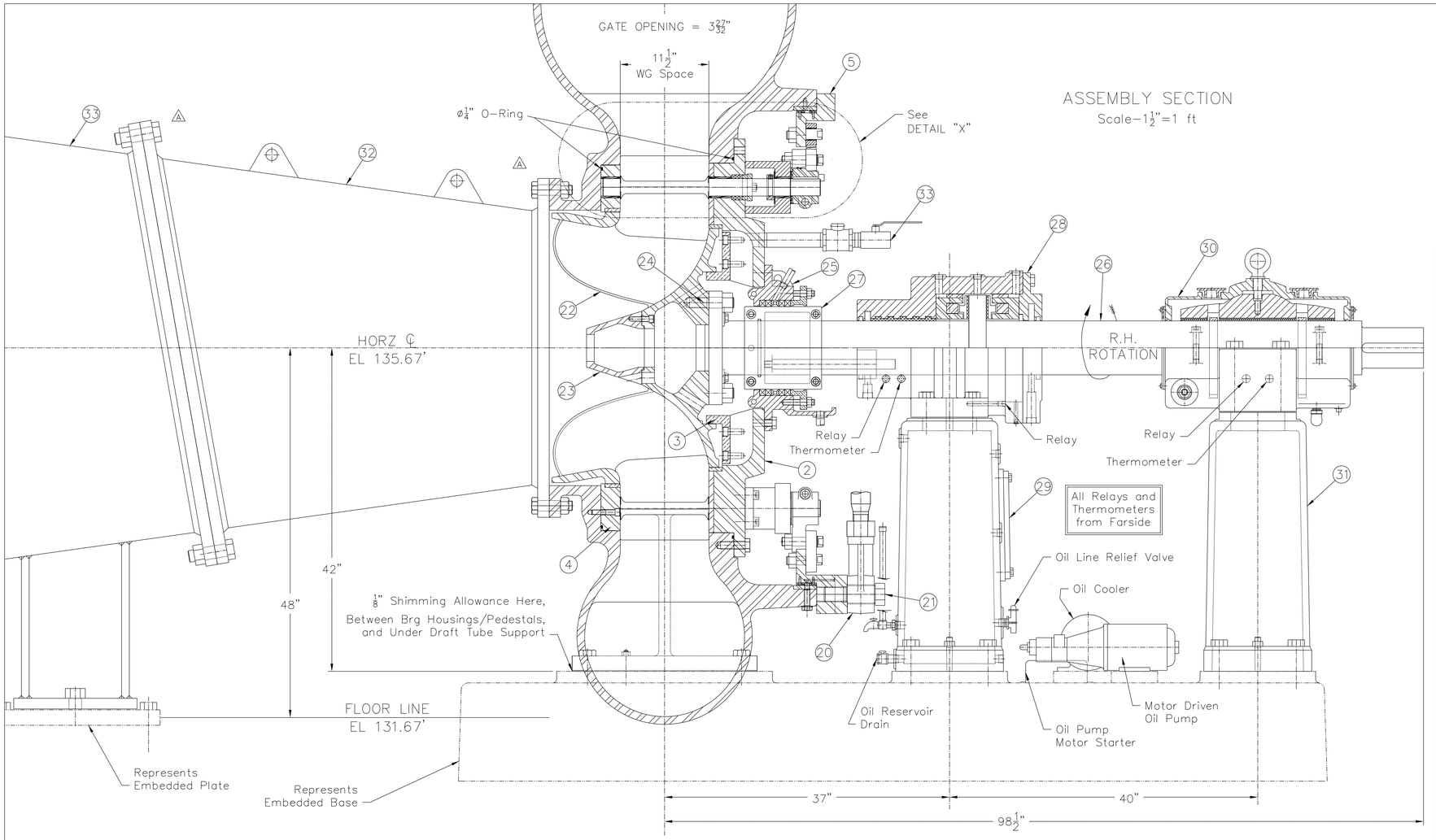

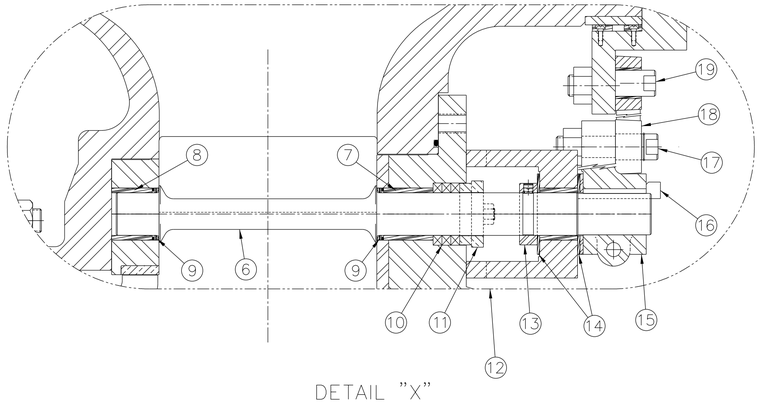

AS-CONSTRUCTED

TOLERANCES; UNLESS OTHERWISE SPECIFIED
X.XXX= +/-.010"
X.XX= +/-.020"
X.X= +/-.030"
Frac.= +/-1/64"
Angle= +/- 1 Deg.
Break All Edges .005"/.010"
√ = 125 RMS

QUANTITY	ITEM NO.	PART NAME, TYPE	L.B. EACH	REFERENCE DETAIL DRAWING	MATERIAL
1	33	DRAFT TUBE, OUTER TAPPER SECTION	2,500	-	-
1	32	DRAFT TUBE, INNER REMOVABLE SECTION	1,500	-	-
1	31	OUTBOARD RADIAL BEARING PEDESTAL	1,000	-	-
1	30	OUTBOARD RADIAL BEARING ASSEMBLY	1,000		-
1	29	THRUST/RADIAL BEARING PEDESTAL	1,000	-	-
1	28	THRUST/RADIAL BEARING ASSEMBLY	1,000	-	-
1	27	SHAFT SLEEVE	150	54117	-
1	26	TURBINE SHAFT	1,115	54105	-
1	25	PACKING BOX ASSEMBLY	256	54104	-
8	24	TURBINE STUDS/NUTS w/RETAINERS	5	54105	-
1	23	RUNNER CONE (DEFLECTOR)	45	54109	-
1	22	TURBINE RUNNER	1,200	54109	-
4	21	CONNECTING ROD PINS	8		-
2	20	CONNECTION ROD ASSEMBLIES	150	-	-
16	19	ECCENTRIC (GATE RING) PIN	1	54106	-
16	18	GATE LINK	4.5	54106	-
16	17	LEVER PIN	1	54106	-
16	16	WG KEY	.25	54106	-
16	15	WG LEVER ARM	26	54106	-
32	14	WG THRUST WASHERS	-	54106	-
16	13	WG THRUST COLLAR	.5	54106	-
16	12	GATE STEM SUPPORT	25	54106	-
16	11	WG PACKING GLANDS	2.5	54102	-
16	10	WG PACKING RING SETS	-	54102	-
32	9	WG SAND SEALS RINGS w/O-RING	-	54103 54103	-
16	8	REAR WICKET GATE BUSHING	-	54103	-
16	7	FRONT WICKET GATE BUSHING	-	54102	-
16	6	WICKET GATES	72	54118	-
1	5	GATE RING ASSEMBLY	900	54110	-
1	4	BOTTOM RING ASSEMBLY	500	54103	-
1	3	THURST RING	160	54102	-
1	2	HEAD COVER ASSEMBLY	2,000	54102	-
1	1	SPIRAL CASE	15,300	54101	-

REVISIONS: CURRENT REV. B

REV.	DATE	BY	CHANGES
A	08/16/01	JRW	-OMIT O-RING AT DRAFT TUBE FLANGES, REF RFI-0011
B	09/12/12	JRW	-AS-CONSTRUCTED- NO CHANGES FROM REV A

Quality Service Since 1862

USACE-PORTLAND JOHN DAY DAM, RUFUS, OR — PURCHASER, SITE

R-120627 — ORDER NUMBER

DATE: 12/23/10 | DRAWN BY: JR Ward | CHECKED BY:

SCALE: 1-1/2"=1 ft. | UNIT NUMBER: W-3036 | APPROVED BY:

CONTRACT NO: W9127N-10-C-0029

DRAWING TITLE: ASSEMBLY SECTION and END VIEW REFURBISHED TURBINE

The James Leffel & Co.
Manufacturers of
HYDRAULIC TURBINES

CLIN: - | NEXT ASSEMBLY: 51244

DRAWING NUMBER: 54100

SHEET SIZE: ANSI-D | SHEET NO OF: 1 2

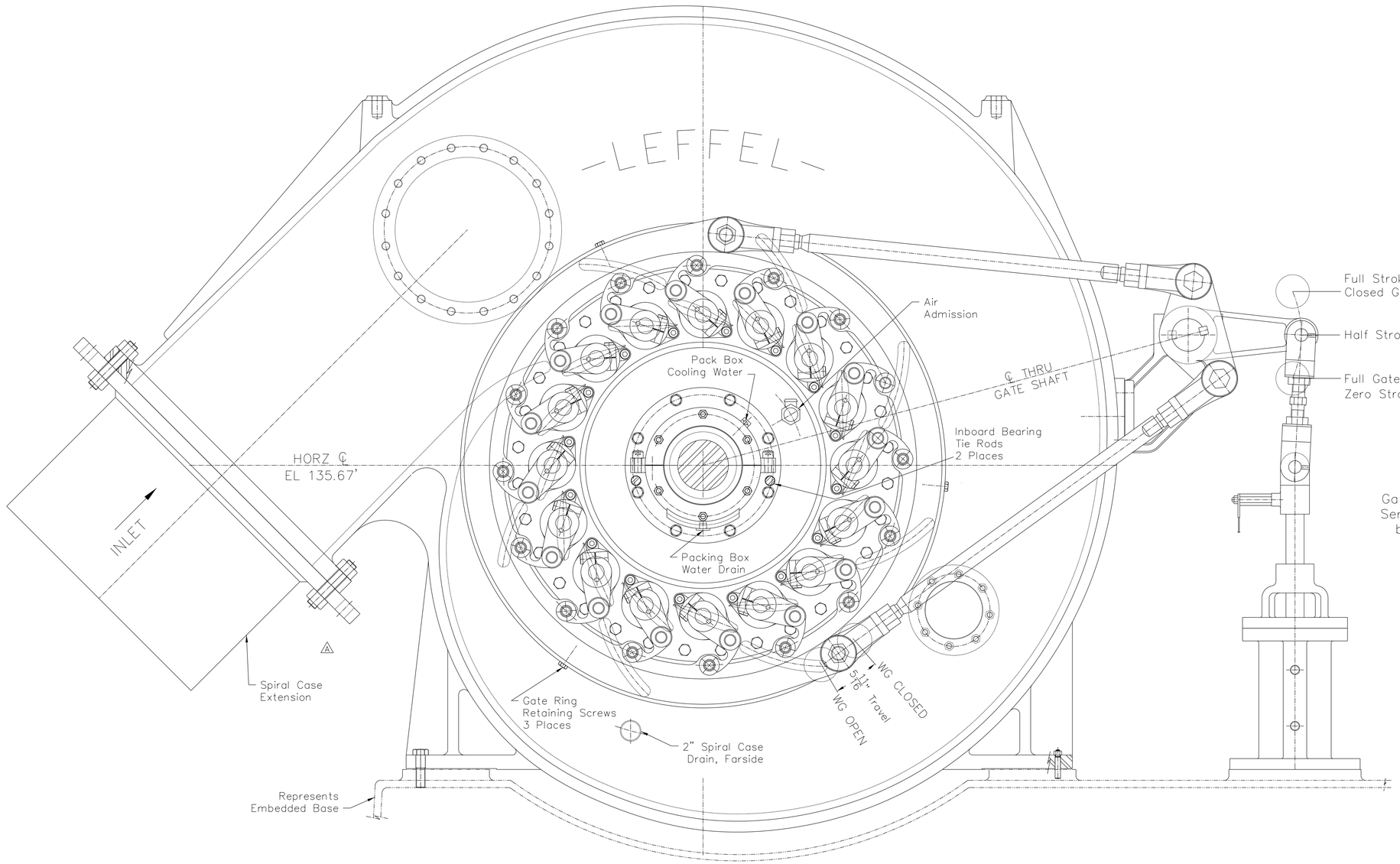

Gate Shafting Line and Servomotor Refurbished by the Government

TURBINE END VIEW
Scale–$1\frac{1}{2}$"=1 ft

AS–CONSTRUCTED

TOLERANCES; UNLESS OTHERWISE SPECIFIED
X.XXX= +/–.010"
X.XX= +/–.020"
X.X= +/–.030"
Frac.= +/–1/64"
Angle= +/– 1 Deg.
Break All Edges .005"/.010"
√ = 125 RMS

QUANTITY	ITEM NO.	PART NAME, TYPE	L.B. EACH	REFERENCE DETAIL DRAWING	MATERIAL

REVISIONS	REV.	DATE	BY	CHANGES
CURRENT REV. B	A	08/16/11	JRW	SEE SHEET 1
	B	09/12/1	JRW	SEE SHEET 1

Quality Service Since 1862

DATE	DRAWN BY	CHECKED BY
12/23/10	JR Ward	
SCALE	UNIT NUMBER	APPROVED BY
1-1/2"=1 ft.	W-3036	

The James Leffel & Co.
Manufacturers of
HYDRAULIC TURBINES

PURCHASER, SITE	CONTRACT NO.	CLIN	NEXT ASSEMBLY
USACE-PORTLAND JOHN DAY DAM, RUFUS, OR	W9127N-10-C-0029	-	51244

DRAWING TITLE
ASSEMBLY SECTION and END VIEW REFURBISHED TURBINE

ORDER NUMBER: R-120627

DRAWING NUMBER: 54100

SHEET SIZE	SHEET NO. OF
ANSI-D	2 2

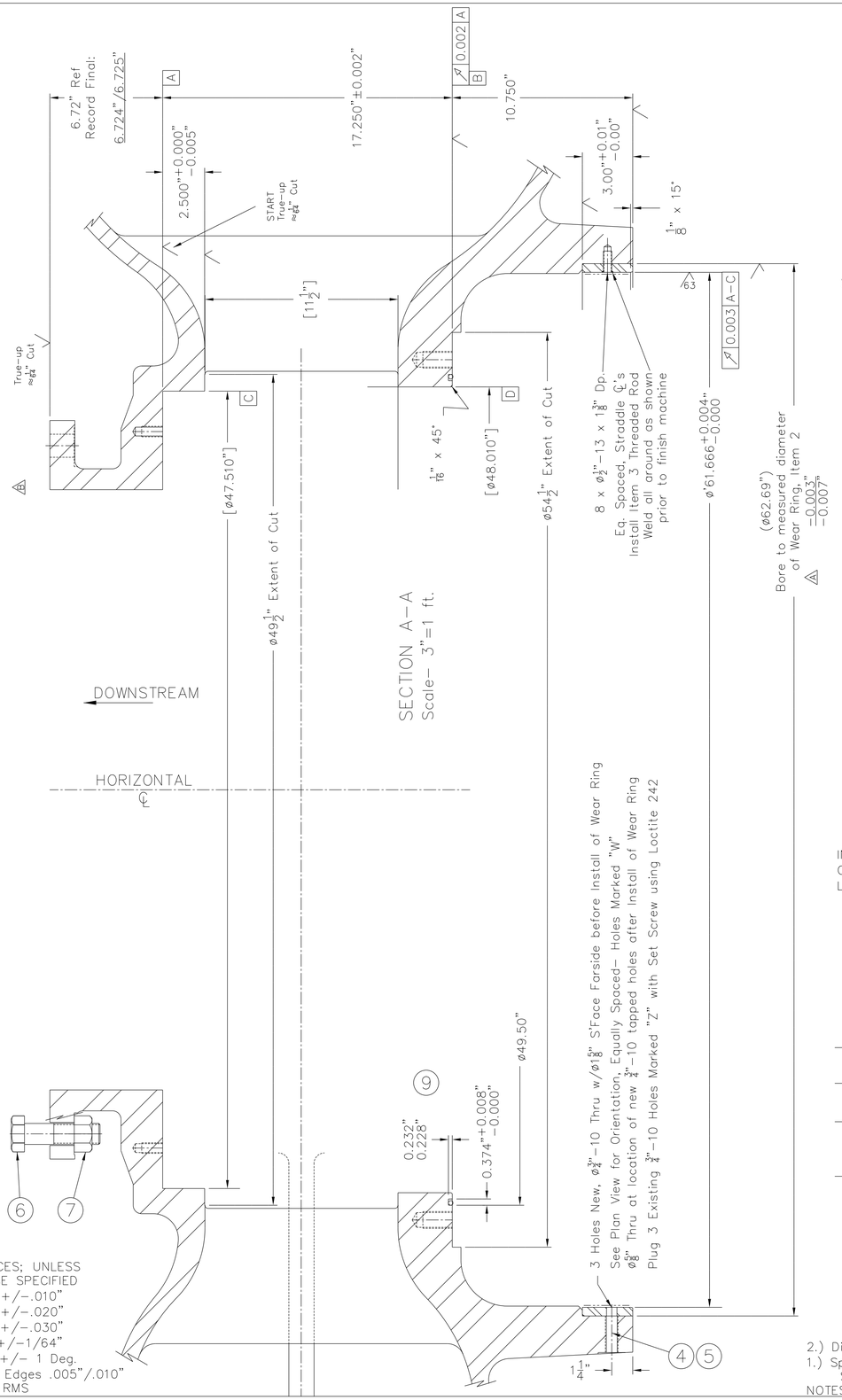

SECTION A-A
Scale- 3"=1 ft.

DOWNSTREAM

HORIZONTAL ℄

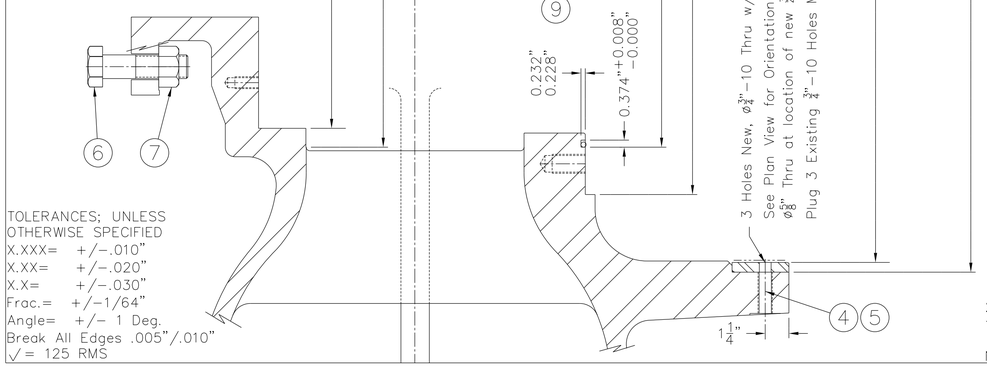

3 Holes New, ø¾"-10 Thru w/ø1⅝" S'Face Farside before Install of Wear Ring
See Plan View for Orientation, Equally Spaced- Holes Marked "W"
ø⅝" Thru at location of new ¾"-10 tapped holes after Install of Wear Ring
Plug 3 Existing ¾"-10 Holes Marked "Z" with Set Screw using Loctite 242

TOLERANCES; UNLESS
OTHERWISE SPECIFIED
X.XXX= +/-.010"
X.XX= +/-.020"
X.X= +/-.030"
Frac.= +/-1/64"
Angle= +/- 1 Deg.
Break All Edges .005"/.010"
√ = 125 RMS

SEE SHEET 2
for SECTION B-B,
SECTION C-C,
and VIEW D-D

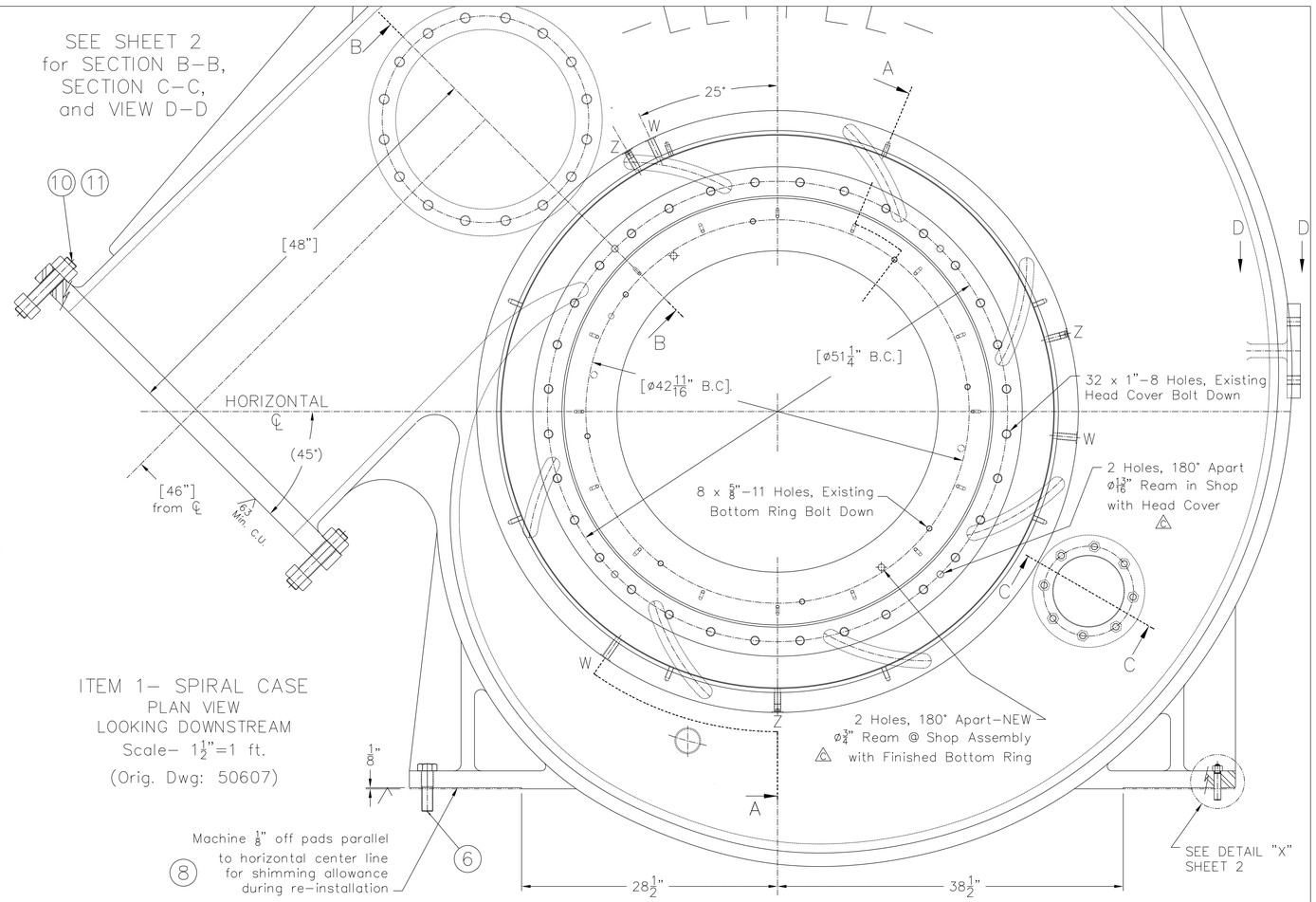

ITEM 1- SPIRAL CASE
PLAN VIEW
LOOKING DOWNSTREAM
Scale- 1½"=1 ft.
(Orig. Dwg: 50607)

INITIAL ALIGNMENT TO BE TO EXISTING SURFACE "A" and DIAMETER "C"
ORIENTATION TO BE AS SHOWN/GIVEN IN PLAN VIEW
LEFFEL ENGINEER TO APPROVE ALIGNMENT/ORIENTATION PRIOR TO BEGINNING WORK

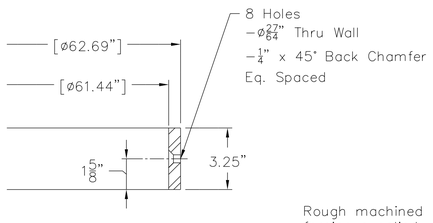

ITEM 2- WEAR RING
Pre-Install Machining
Scale- 3"=1 ft.

Rough machined
forging supplied
by government.
Ref Dwg: 53404

AS-CONSTRUCTED

2.) Dimensions in [brackets] reference existing dimensions.
1.) Spiral Case to be prepared and painted per
Section 09 97 02.00 26, System No: 21-A-Z
NOTES:

** PARTS/MATERIAL LIST CONTINUED ON SHEET 2 **

QUANTITY	ITEM NO.	PART NAME, TYPE	LB. EACH	REFERENCE	MATERIAL
0	9	-	-		-
2	8	Spiral Case Shim Pack- SHEET 2 Detail	-		Carbon Steel
24	7	ø1-1/4" Hex Nut	-		Grade 5, Plain
28	6	ø1-1/4" x 4-1/2" HHCS	-		Grade 5, Plain
3	5	Washer, 0.81 ID x 1.47 □D x 0.10/0.16 Thk	-		300 Series S/S
3	4	GR Retaining Screw- SHEET 2 Detail	-		18-8 S/S
1	3	ø1/2"-13 x 36" Thd Rod- *Cut to Suit	-	-	18-8 S/S
1	2	Wear Ring (Gate Ring Pivot)	70	CSM (Rough)	304L S/S Forging
1	1	Spiral Case- Existing	15,300		Cast Carbon Steel ASTMA27-60 Gr. 65-35

CURRENT REV. D

REVISIONS

REV.	DATE	BY	CHANGES
A	06/10/11	JRW	-REVISED ITEM 2 PRE-MACHINE DETAIL BORE WAS GIVEN AS ø62.585"+0.002"/-0.000"
B	08/16/11	JRW	-REMOVED ORING GROOVE IN BOTTOM FLANGE (RFI0011)
C	09/11/11	JRW	-ADDED ITEM 10/11 DETAIL ON SHEET 2 -ALTERED HEAD COVER/BOTTOM RING DOWELLING -ALTERED ITEM 8 SHIM PACKS
D	09/12/12	JRW	-AS-CONSTRUCTED- NO CHANGES FROM REV C

Quality Service Since 1862

DATE	DRAWN BY	CHECKED BY
11/17/10	JR Ward	A DYNGE

SCALE	UNIT NUMBER	APPROVED BY
AS NOTED	W-3036	

The James Leffel & Co.
Manufacturers of
HYDRAULIC TURBINES

USACE-PORTLAND
JOHN DAY DAM, RUFUS, OR
PURCHASER, SITE

R-120627
ORDER NUMBER

CONTRACT NO.
W9127N-10-C-0029

CLIN 0012 | NEXT ASSEMBLY 54100

DRAWING TITLE
SPIRAL CASE
REFURBISHMENT
WORK

DRAWING NUMBER
54101

SHEET SIZE ANSI-D | SHEET NO. 1 OF 2

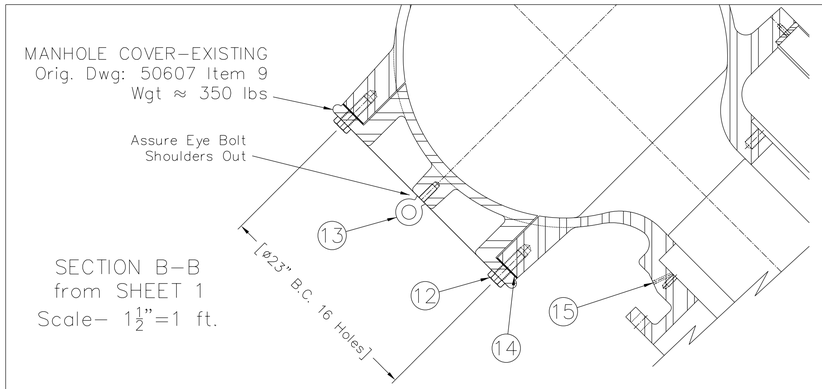

SECTION B–B
from SHEET 1
Scale– $1\frac{1}{2}$"=1 ft.

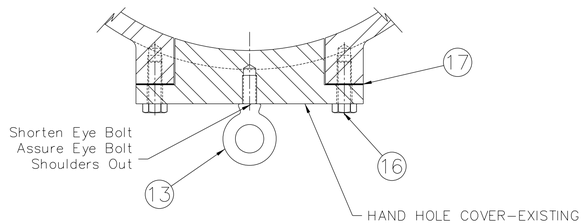

SECTION C–C
from SHEET 1
Scale– 3"=1 ft.

VIEW D–D
from SHEET 1
Scale– 3"=1 ft.

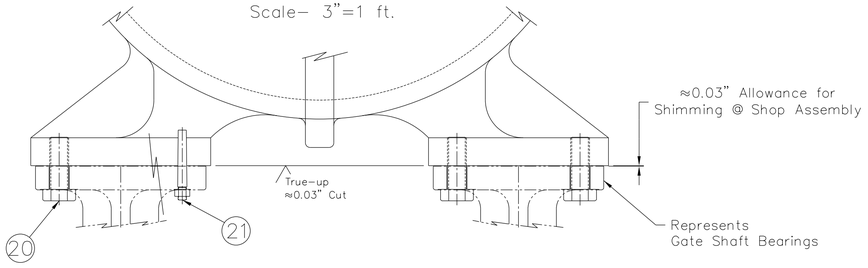

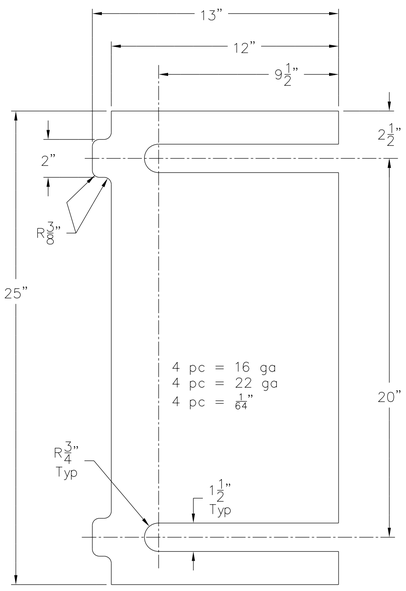

ITEM 8– SPIRAL CASE
SHIM PACK
Scale– 3"=1 ft.

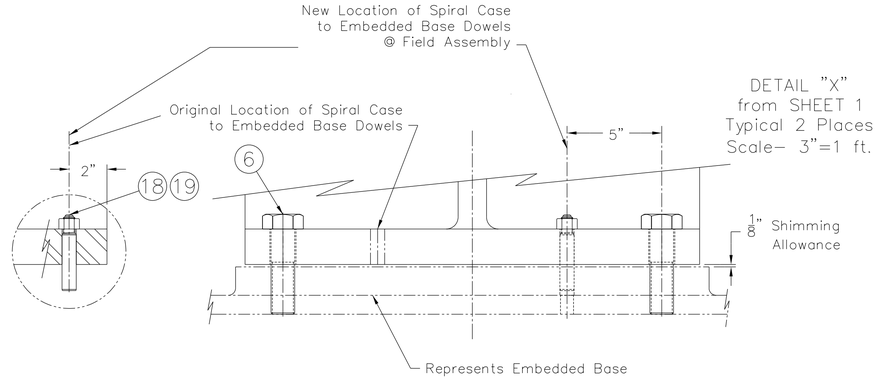

DETAIL "X"
from SHEET 1
Typical 2 Places
Scale– 3"=1 ft.

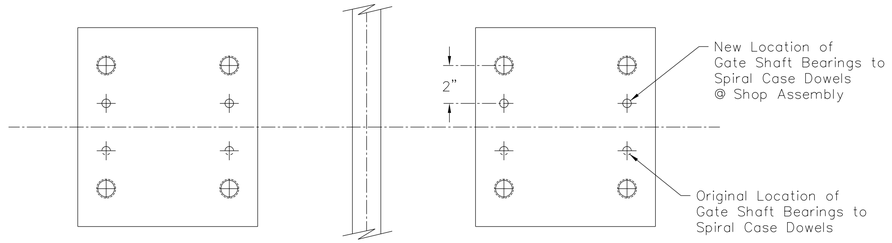

125
F.A.O.;
Except as Given

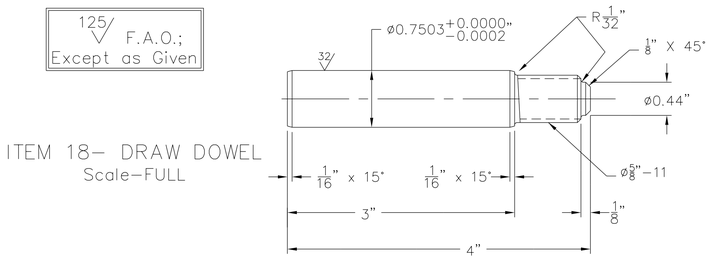

ITEM 18– DRAW DOWEL
Scale–FULL

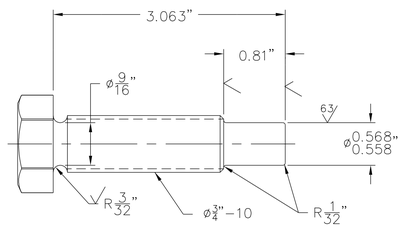

ITEM 4– G.R. RETAINING SCREW
Alter Purchase Item
Scale– FULL

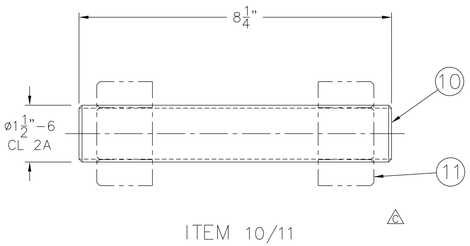

ITEM 10/11
INLET FLANGE STUDS/NUTS
Scale– 6"=1 ft.

AS–CONSTRUCTED

** PARTS/MATERIAL LIST CONTINUED FROM SHEET 1 **

QUANTITY	ITEM NO.	PART NAME, TYPE	LB. EACH	REFERENCE	MATERIAL
4	21	#8 x 3" Threaded Taper Pin	–		Carbon Steel
8	20	ø1"-8 x 2-3/4" HHCS	–		Grade 8, Plain
2	19	ø5/8"-11 Hex Nut	–		Silicon bronze
2	18	3/4" x 4" Draw Dowel- Per Detail	–		4140–HT, RC 26–32 –
1	17	1/16" Thk Gasket- 12" OD x 8" ID	–		Viton FKM, Shore A: 75
8	16	ø3/4" x 2-1/4" HHCS	–		18–8 S/S
16	15	ø1/8" NPTF Hex Socket Pipe Plug	–	GSM	Yellow Brass
1	14	1/8" Thk Gasket- 26" OD x 20" ID	–		Viton FKM, Shore A: 75
1	13	ø3/4"-10 x 2" Eye Bolt- Shouldered	–		8620–Plain
16	12	ø1-1/8"-7 x 3-1/2" HHCS	–		18–8 S/S
64	11	1-1/2"-6 Hvy Hex Nut	–		ASTM A194 Gr. 2H
32	10	ø1-1/2" x 8-1/4" Lg Stud, Sh. 2 Detail	2		ASTM A193 Br. B7

TOLERANCES; UNLESS
OTHERWISE SPECIFIED
X.XXX= +/–.010"
X.XX= +/–.020"
X.X= +/–.030"
Frac.= +/–1/64"
Angle= +/– 1 Deg.
Break All Edges .005"/.010"
√ = 125 RMS

2.) Dimensions in [brackets] reference existing dimensions.
1.) Mon Hole and Hand Hole Covers to be prepared and painted per Section 09 97 02.00 26, System No: 21–A–Z
NOTES:

USACE–PORTLAND
JOHN DAY DAM, RUFUS, OR
PURCHASER, SITE

R-120627
ORDER NUMBER

CURRENT REV. D

REVISIONS

REV.	DATE	BY	CHANGES
A	06/10/11	JRW	-SEE SHEET 1
B	08/16/11	JRW	-SEE SHEET 1
C	09/11/11	JRW	-SEE SHEET 1
D	09/12/12	JRW	-SEE SHEET 1

Quality Service Since 1862

DATE	DRAWN BY	CHECKED BY
11/17/10	JR Ward	A DYNGE
SCALE	UNIT NUMBER	APPROVED BY
AS NOTED	W-3036	

The James Leffel & Co.
Manufacturers of
HYDRAULIC TURBINES

CONTRACT NO.
W9127N-10-C-0029

CLIN	NEXT ASSEMBLY
0012	54100

DRAWING TITLE
SPIRAL CASE
REFURBISHMENT
WORK

DRAWING NUMBER
54101

SHEET SIZE	SHEET NO.	OF
ANSI-D	2	2

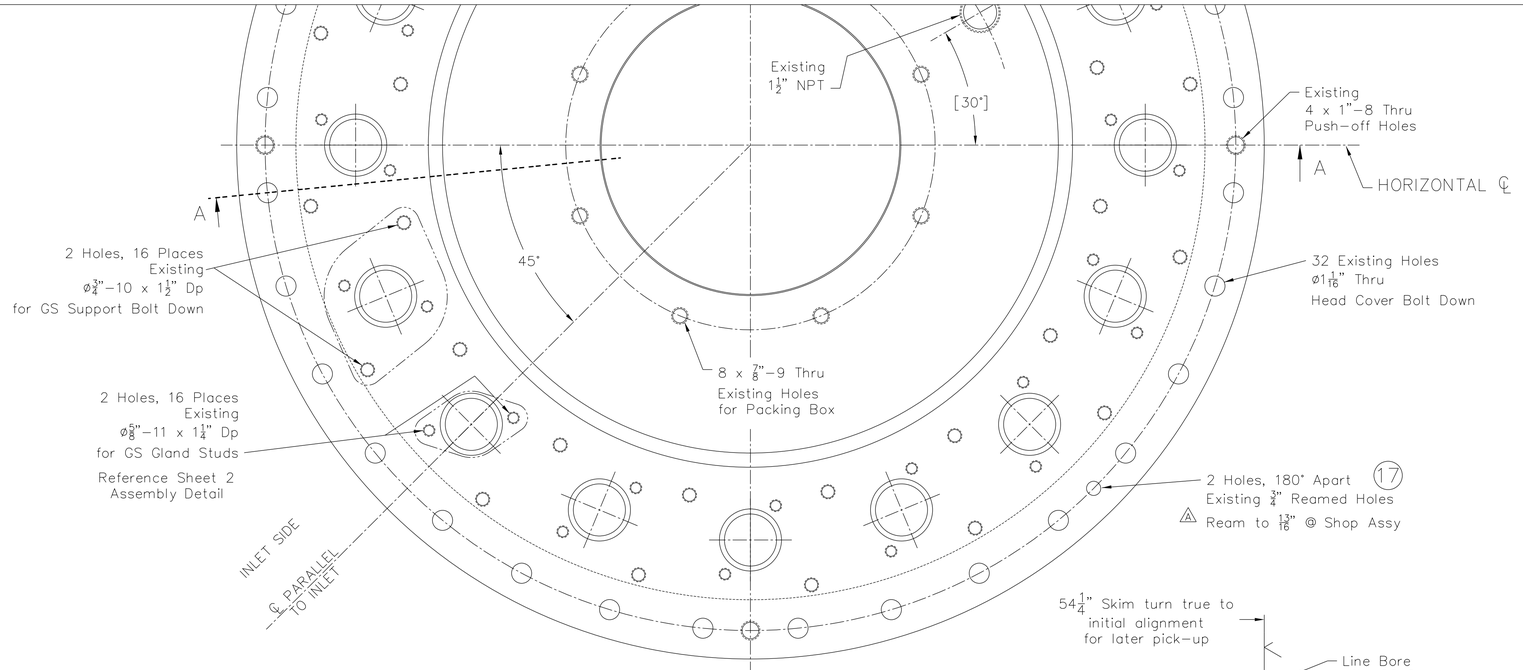

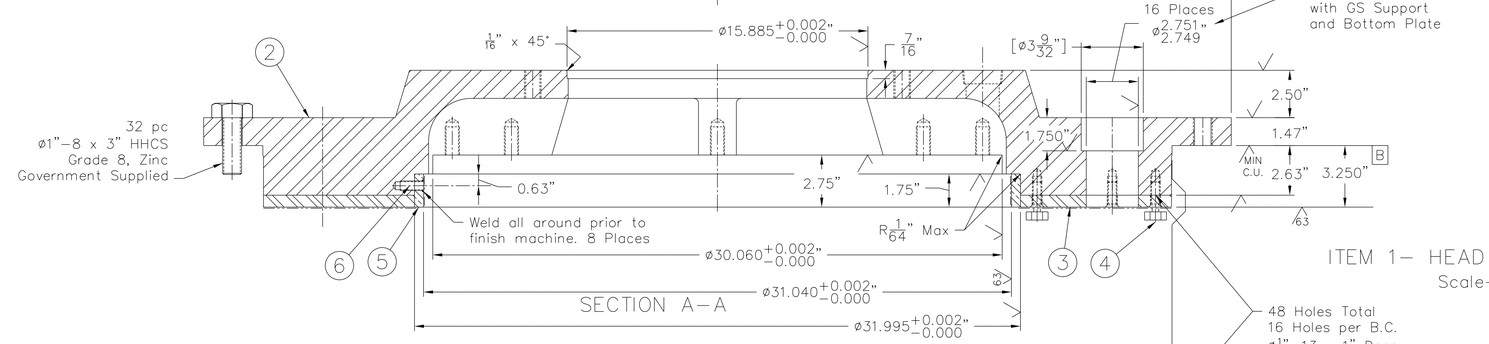

ITEM 1– HEAD COVER ASSEMBLY
Scale– 3"=1 ft.

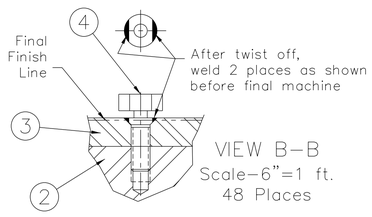

VIEW B–B
Scale–6"=1 ft.
48 Places

AS–CONSTRUCTED

2.) Dimensions in [brackets] reference existing dimensions.
1.) Head Cover to be prepared and painted per Section 09 97 02.00 26
NOTES:

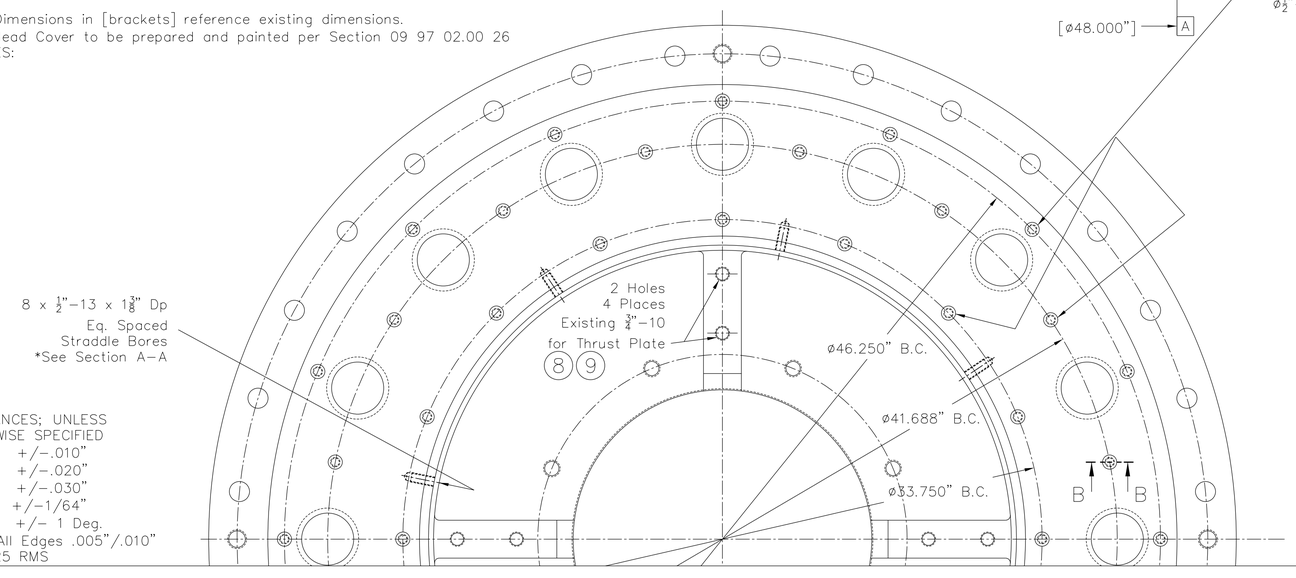

TOLERANCES; UNLESS
OTHERWISE SPECIFIED
X.XXX= +/–.010"
X.XX= +/–.020"
X.X= +/–.030"
Frac.= +/–1/64"
Angle= +/– 1 Deg.
Break All Edges .005"/.010"
√ = 125 RMS

OUTLINE OF WORK:

Preparation of Item 2 for attachment of Item 3 Face Plate
Lathe Work
1.) Align to existing surface "B" and diameter "A"
2.) Machine existing face to 2.63" dimension
Mill Work
3.) Align to existing surface "B" and diameter "A"
and orient to existing Horizontal ℄
4.) Drill/Tap 48 x ½"–13 x 1" Dp. holes per drawing
5.) Tap (2) existing ¾" reamed holes and drill (2) ø⅝" Holes as given
Shop Work
6.) Alter supplied break–off screws (Item 4) per Sheet 2 Detail
7.) Attach Item 3 Face Plate (Dwg: 53393) using Item 4 Break–off Screws
8.) Weld to secure per VIEW B–B

Preparation of Item 2 for attachment of Item 5 Front Stationary Seal Ring
(Item 5 government supplied pre–machined material to first be machined per Sheet 2 Detail)
Lathe Work
1.) Align to existing surface "B" and diameter "A"
2.) Bore ø31.995" to 1.75" + 1/16" Deep.
Floor Work
3.) Skrink in Item 5 Seal Ring with pre–drilled holes straddling
inner B.C. of Face Plate attachment holes
4.) Drill and tap 8 x ø½"–13 x 1⅜" deep at existing pre–machined holes in Seal Ring.
Install Item 6 threaded rod.
5.) Weld to secure as given.

Final Machine Work
Lathe Work
1.) Align to existing surface "B" and diameter "A"
2.) Turn/bore/face complete as given.

3.) Line bore (16) places, 2.751/2.749 with Bottom Ring and GS Supports
Line bore concentric to existing ø3 9/32" Counterbores (for Gate Stem Packing)
**Bottom of existing ø3 9/32" bores can be cut now or at time of line bore. (1.750" dimension)

Thrust Ring and Bushing Installation– Reference Assembly Detail, Sheet 2
This work to be post line bore work.
1.) Attached Item 8 Thrust Ring with Item 9 SHCS applying Loctite 242
–Tack weld head of SHCS to Thrust Ring
2.) Alter Item 10 GSM Bushings per Sheet 2 Detail
–Install wicket gate bushings, Item 10

QUANTITY	ITEM NO.	PART NAME, TYPE	LB. EACH	REFERENCE	MATERIAL
2	17	13/16" x 3–1/4" Draw Dowel with Nut	–		ASTM A193 Gr 7 Nut: Gr 5, Zinc
1	16	ø1–1/2" Reg. Port Ball Valve, 400 psi CWP	–		Bronze w/PTFE Seat Apollo 32–107
1	15	ø1–1/2" Sch 40 x 1–3/4" Nipple	–		304 S/S –
1	14	1–1/2" Horizontal Lift Check Valve	–		Bronze, Class 125 McMaster: 4894K15
1	13	ø1–1/2" Sch 40 x 9" Nipple	–		304 S/S –
16	12	□–Ring 1/8" x 2–3/4" x 2–1/2"	–		Viton FKM, Shore A: 75
16	11	Sand Seal Ring, New	–		Nylon MC 901– (ALRO Steel)
18	10	Upper WG Bushing (2 Spares)	–	GSM (Alter)	Non–Lube Composite Orkot: GBZUE2003–TXMM
8	9	ø3/4"–10 x 1–1/2" SHCS	–	–	18–8 S/S –
1	8	Thrust Ring–New	160	–	Nickel–Aluminum Bronze C95800
2	7	ø7/8"–9 x 1" Lg. Set Screw, Cup Point	–	–	Alloy Steel
1	6	ø1/2"–13 x 36" Thd Rod, *Cut to Suit	–	–	Silicon Bronze ASTM B98
1	5	Front Stationary Seal Ring (Alter)	25	GSM	Nickel–Aluminum Bronze C95800
48	4	Break–off Screws (Alter)	.1	GSM	304 SS –
1	3	Face Plate	160	GSM	304 SS –
1	2	Head Cover–Existing	1800		Cast Steel ASTM A27–60, Gr 65–35
1	1	Head Cover Assembly	(2,000)		–– ––

REV.	DATE	BY	CHANGES
A	09/20/11	JRW	–ADDED ITEM 17 and SHEET 2 DETAIL
B	10/20/11	JRW	–ALTERED DOWELLING OF HEAD COVER
C	09/12/12	JRW	–AS–CONSTRUCTED– NO CHANGES FROM REV B

CURRENT REV.: C
REVISIONS

Quality Service Since 1862

USACE–PORTLAND
JOHN DAY DAM, RUFUS, OR
PURCHASER: SITE

R–120627
ORDER NUMBER

DATE	DRAWN BY	CHECKED BY
11/15/10	JR Ward	A DYNGE
SCALE	UNIT NUMBER	APPROVED BY
AS NOTED	W–3036	

CONTRACT NO: W9127N–10–C–0029

DRAWING TITLE
HEAD COVER
with NEW THRUST RING
REFURBISHMENT

The James Leffel & Co.
Manufacturers of
HYDRAULIC TURBINES

CLIN	NEXT ASSEMBLY
0009 0012 0014	54100

DRAWING NUMBER
54102

SHEET SIZE	SHEET NO. OF
ANSI–D	1 2

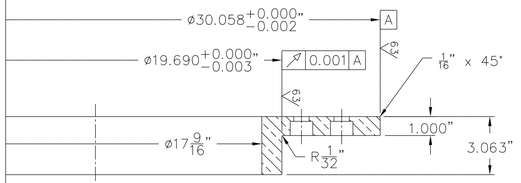

ITEM 8– THRUST RING–NEW
Scale– 3"=1 ft.

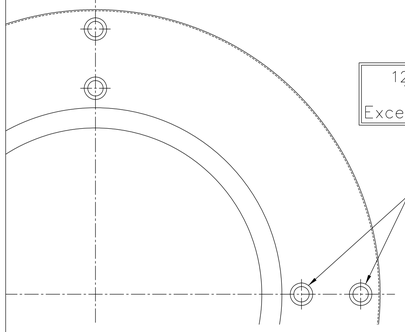

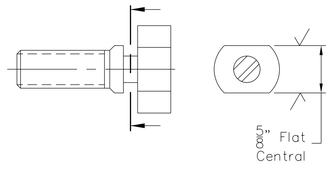

ITEM 4– BREAK OFF SCREWS
PRE–INSTALL MACHINING
Scale– FULL.

Government supplied Break Off Screws
Dwg: 53402

Alter by cutting 5/8" flat as shown

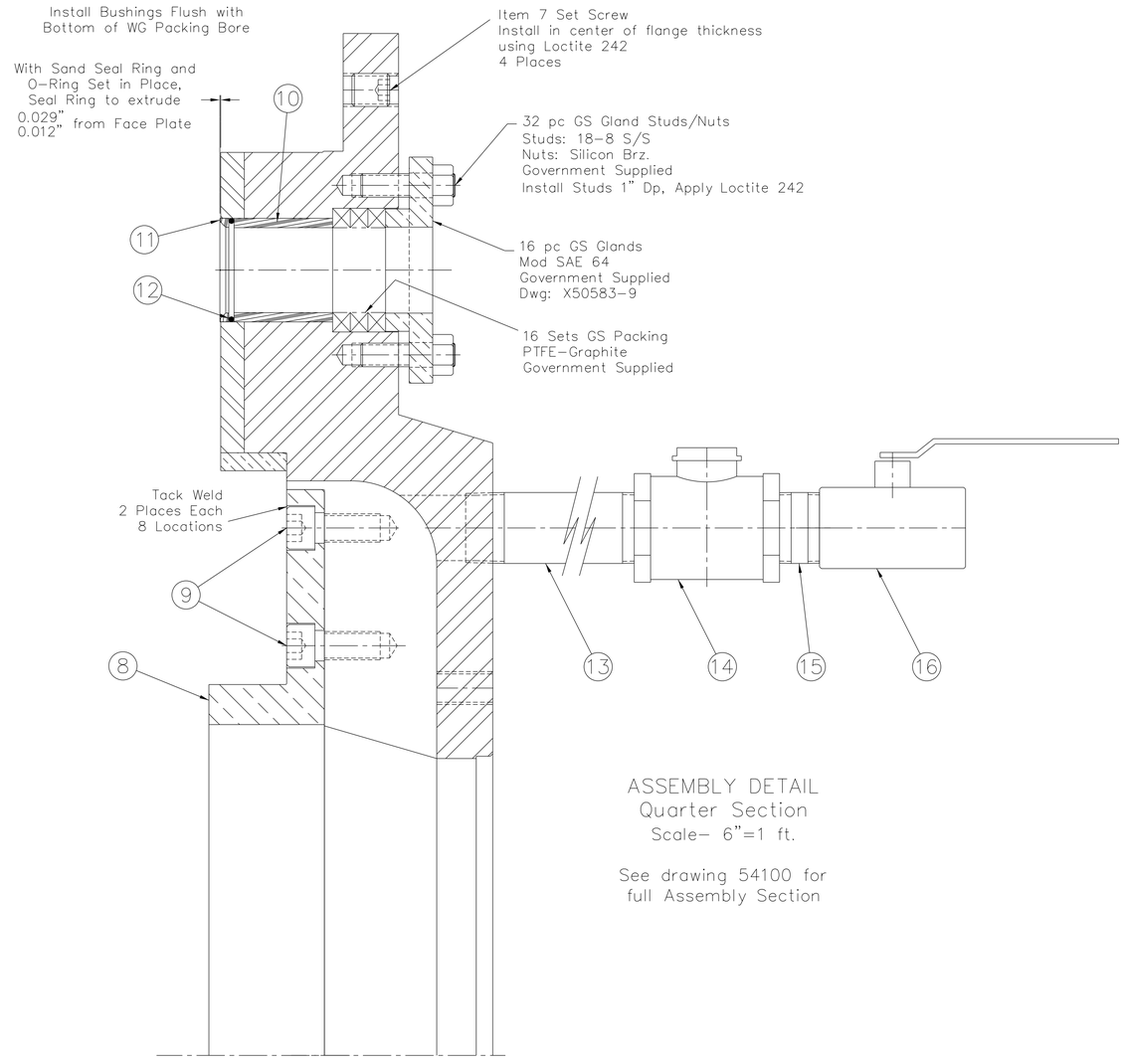

ASSEMBLY DETAIL
Quarter Section
Scale– 6"=1 ft.

See drawing 54100 for
full Assembly Section

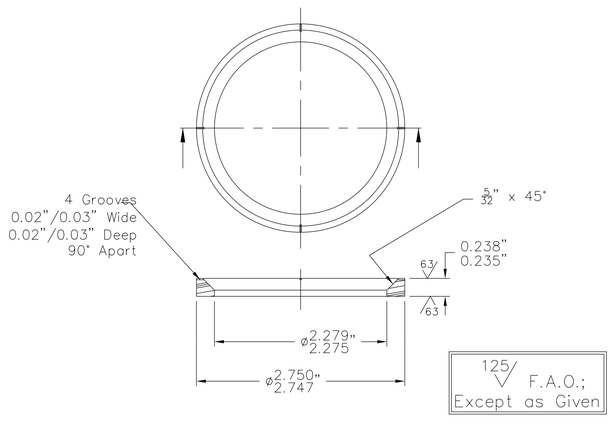

ITEM 11
SAND SEAL RING
Scale– FULL

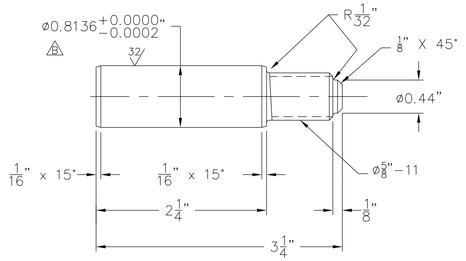

ITEM 17– DRAW DOWEL
Scale–FULL

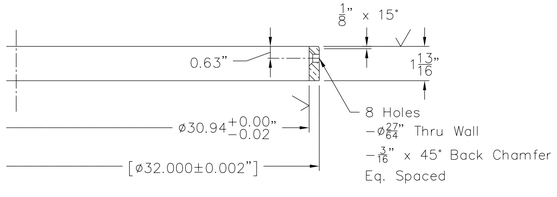

ITEM 5– FRONT STATIONARY SEAL RING
PRE–INSTALL MACHINING
Scale– 3"=1 ft.

Government supplied Front Stationary Seal Ring
Dwg: 53403

Alter by facing one end to length, machining chamfer,
and drilling/chamfering holes as given.

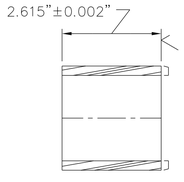

ITEM 10– UPPER WG BUSHING
ALTER GSM
Scale– 6"=1 ft.

Government supplied bushings.
Dwg: GBZUE2003–TXMM

Alter length as given

AS–CONSTRUCTED

TOLERANCES; UNLESS
OTHERWISE SPECIFIED
X.XXX= +/–.010"
X.XX= +/–.020"
X.X= +/–.030"
Frac.= +/–1/64"
Angle= +/– 1 Deg.
Break All Edges .005"/.010"
√ = 125 RMS

QUANTITY	ITEM NO.	PART NAME, TYPE	L.B. EACH	REFERENCE	MATERIAL

REVISIONS
CURRENT REV.

REV.	DATE	BY	CHANGES
A	09/20/11	JRW	–SEE SHEET 1
B	10/20/11	JRW	–SEE SHEET 1
C	09/12/12	JRW	–SEE SHEET 1

Quality Service Since 1862

DATE	DRAWN BY	CHECKED BY
11/15/10	JR Ward	A DYNGE
SCALE	UNIT NUMBER	APPROVED BY
AS NOTED	W–3036	

The James Leffel & Co.
Manufacturers of
HYDRAULIC TURBINES

CONTRACT NO: W9127N–10–C–0029
CLIN 0009 0012 0014
NEXT ASSEMBLY 54100

DRAWING TITLE
HEAD COVER
with NEW THRUST RING
REFURBISHMENT

DRAWING NUMBER 54102

SHEET SIZE ANSI–D
SHEET NO OF 2 2

USACE–PORTLAND
JOHN DAY DAM, RUFUS, OR
PURCHASER, SITE

R–120627
ORDER NUMBER

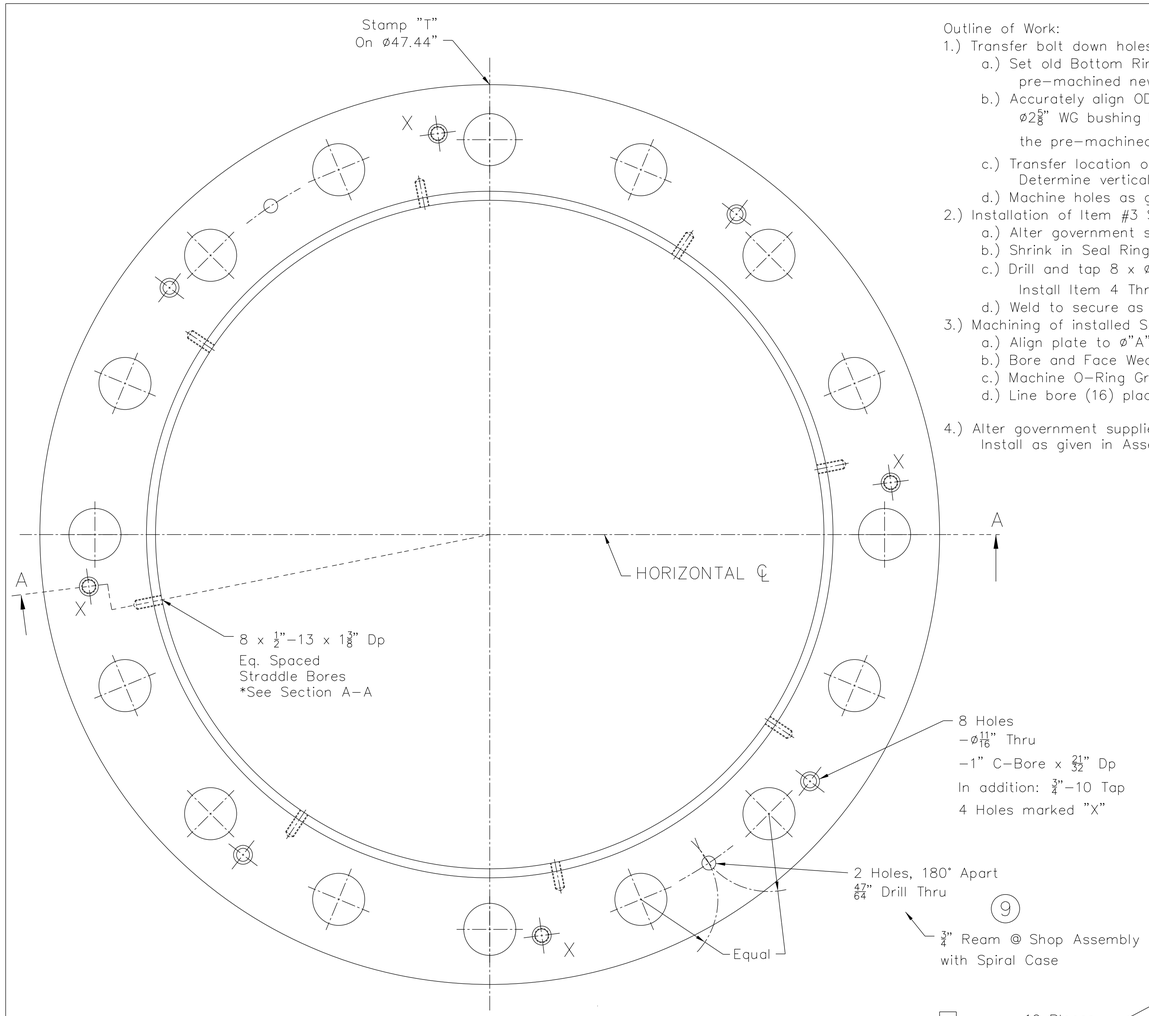

Outline of Work:

1.) Transfer bolt down holes
   a.) Set old Bottom Ring atop government supplied pre–machined new Bottom Ring (Item #2)
   b.) Accurately align OD's and orient best case the ø2 5/8" WG bushing bores in the old ring with the pre–machined ø2 5/8" bores in the new ring
   c.) Transfer location of (8) C–bored holes and any match marks Determine vertical position and stamp as given
   d.) Machine holes as given
2.) Installation of Item #3 Seal Ring
   a.) Alter government supplied Seal Ring per detail
   b.) Shrink in Seal Ring with pre–drilled holes straddle WG Bushing bores
   c.) Drill and tap 8 x ø1/2"–13 x 1 3/8" deep at existing pre–machined holes. Install Item 4 Threaded Rod.
   d.) Weld to secure as given
3.) Machining of installed Seal Ring
   a.) Align plate to ø"A" and surface "B"
   b.) Bore and Face Wear Ring (flush with top surface.)
   c.) Machine O–Ring Groove
   d.) Line bore (16) places, 2.751/2.749 with Head Cover and GS Supports
4.) Alter government supplied Item 5 Lower WG bushings per detail Install as given in Assembly Detail

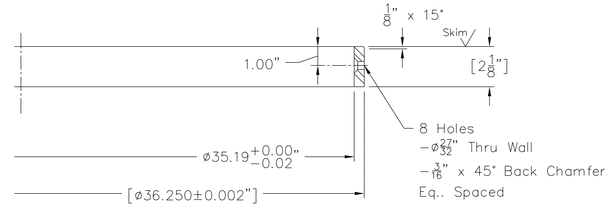

ITEM 3– REAR STATIONARY SEAL RING
PRE–INSTALL MACHINING
Scale– 3"=1 ft.

Government supplied Rear Stationary Seal Ring
Dwg: 53403

Alter by facing one end to length, machining chamfer, and drilling/chamfering holes as given.

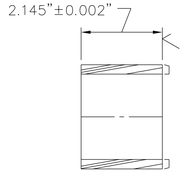

ITEM 5
LOWER WG BUSHING
ALTER GSM
Scale– 6"=1 ft.

Government supplied bushings.
Dwg: GBZUE2002–TXMM

Alter length as given

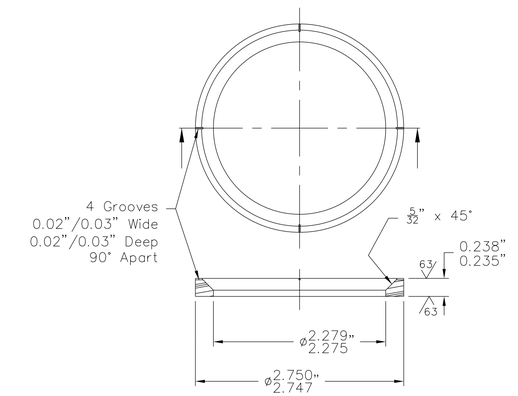

125 F.A.O.; Except as Given

ITEM 6
SAND SEAL RING
Scale– FULL

Install Bushings Flush with Bottom Surface

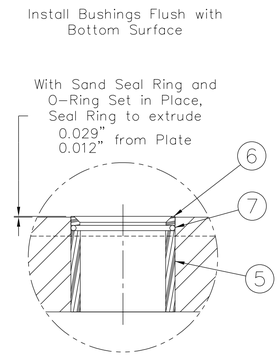

DETAIL "Y"
ASSEMBLY DETAIL
Quarter Section
Scale– 6"=1 ft.

See drawing 54100 for full Assembly Section

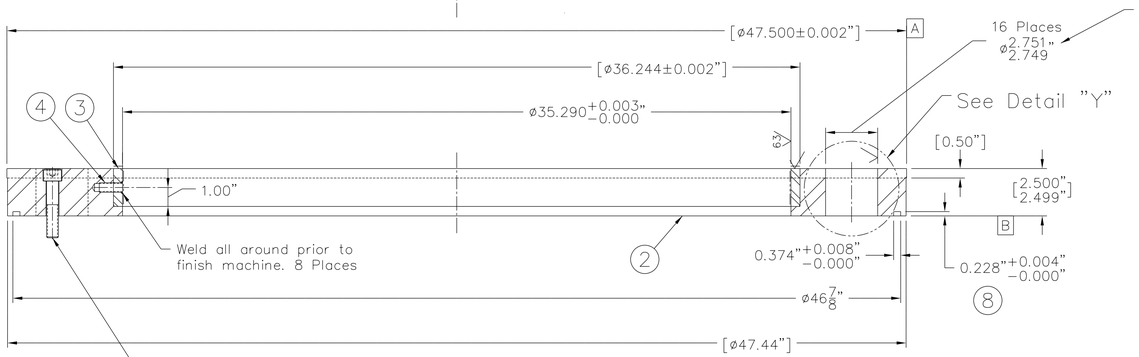

SECTION A–A

ITEM 1– BOTTOM RING ASSEMBLY
Scale– 3"=1 ft.

AS–CONSTRUCTED

QUANTITY	ITEM NO.	PART NAME, TYPE	LB. EACH	REFERENCE	MATERIAL
2	9	ø3/4" x 3" Vented Pull Dowel	–		18–8 Stainless
1	8	□–Ring Chord ø1/4" (Make to Fit)	–		Viton FKM, Shore A: 75
16	7	□–Ring 1/8" x 2–3/4" x 2–1/2"	–		Viton FKM, Shore A: 75
16	6	Sand Seal Ring, New	–		Nylon MC 901– (ALRO Steel)
18	5	Lower WG Bushing (2 Spares)	–	GSM (Alter)	Non–Lube Composite Orkot: GBZUE2002–TXMM
1	4	ø1/2"–13 x 18" Thd. Rod, *Cut to Suit	–		Silicon bronze B98
1	3	Rear Seal Ring–Alter	45	GSM	Nickel–Aluminum Bronze C95800
1	2	Bottom Ring	455	GSM	304 L S/S –
1	1	Bottom Ring Assembly	[500]		– –

REVISIONS: A CURRENT REV.

REV.	DATE	BY	CHANGES
A.	09/12/12	JRW	–AS–CONSTRUCTED– NO CHANGES FROM REV –

Quality Service Since 1862

The James Leffel & Co.
Manufacturers of
HYDRAULIC TURBINES

USACE–PORTLAND
JOHN DAY DAM, RUFUS, OR
PURCHASER, SITE

R–120627
ORDER NUMBER

DATE	DRAWN BY	CHECKED BY
11/15/10	JR Ward	A DYNGE
SCALE	UNIT NUMBER	APPROVED BY
AS NOTED	W–3036	

CONTRACT NO.
W9127N–10–C–0029

DRAWING TITLE
BOTTOM RING
FINISH MACHINE

CLIN	NEXT ASSEMBLY
0009 0013	54100

DRAWING NUMBER
54103

SHEET SIZE	SHEET NO	OF
ANSI–D	1	1

TOLERANCES; UNLESS OTHERWISE SPECIFIED
X.XXX= +/–.010"
X.XX= +/–.020"
X.X= +/–.030"
Frac.= +/–1/64"
Angle= +/– 1 Deg.
Break All Edges .005"/.010"
√ = 125 RMS

NOTES:
1.) Dimensions in [brackets] reference existing dimensions.

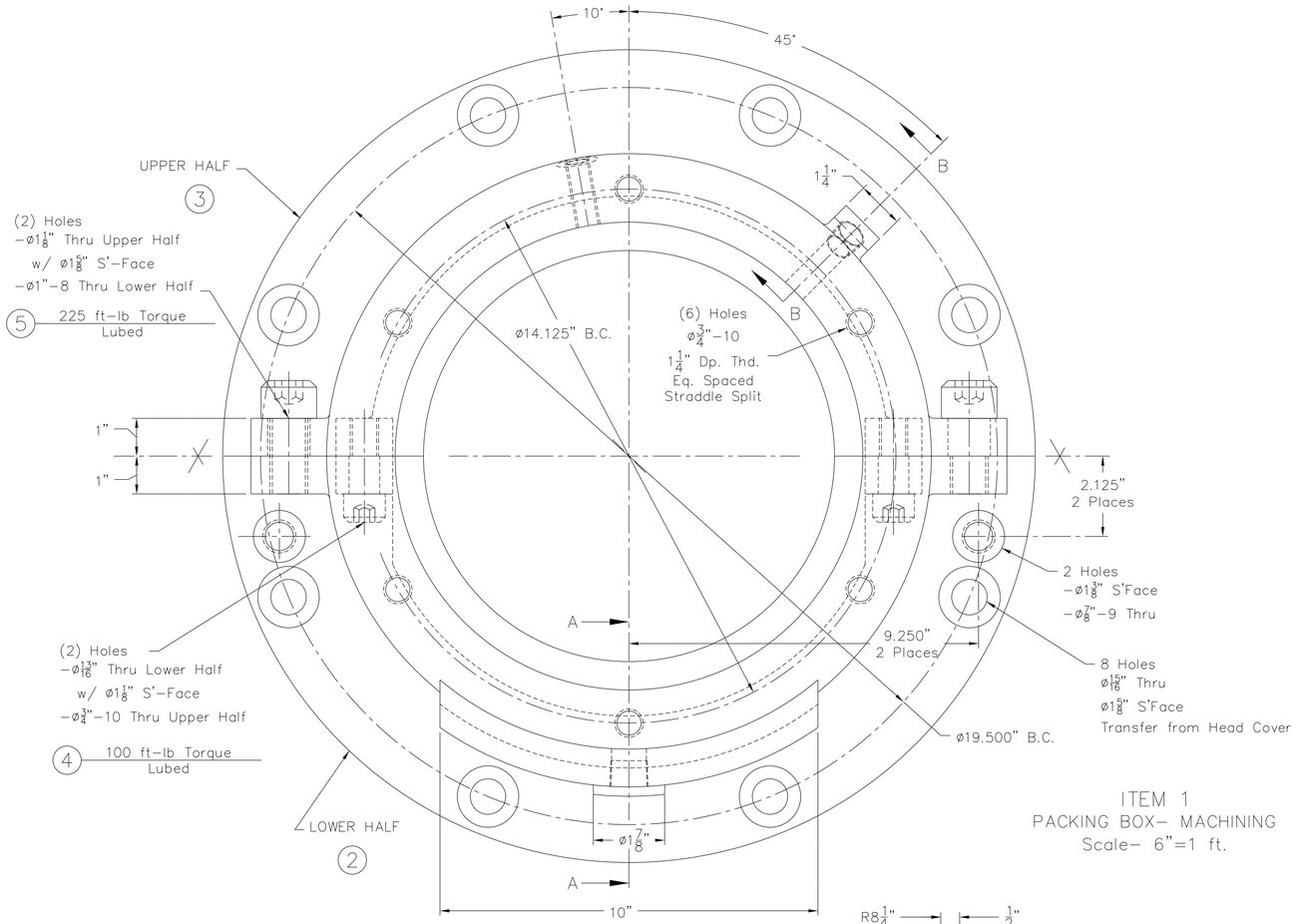

ITEM 1
PACKING BOX– MACHINING
Scale– 6"=1 ft.

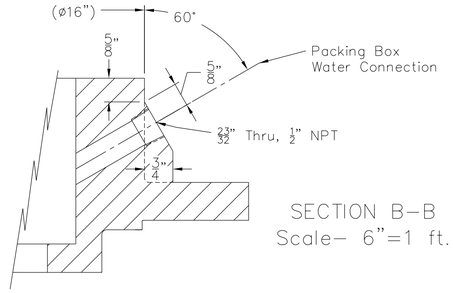

SECTION B–B
Scale– 6"=1 ft.

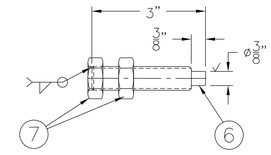

SUB–ASSY DETAIL
Locking Screw
Items #6 & #7
Scale– 6"=1 ft.

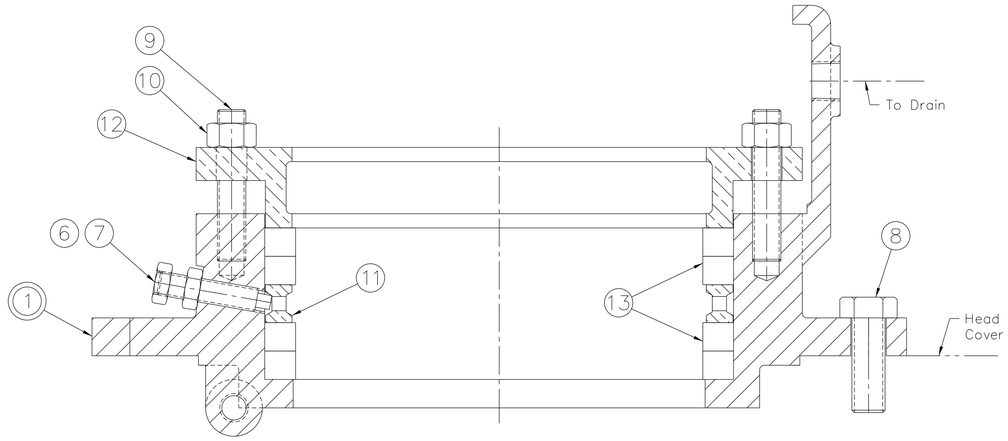

REFERENCE ASSEMBLY
Scale 6"=1 ft.

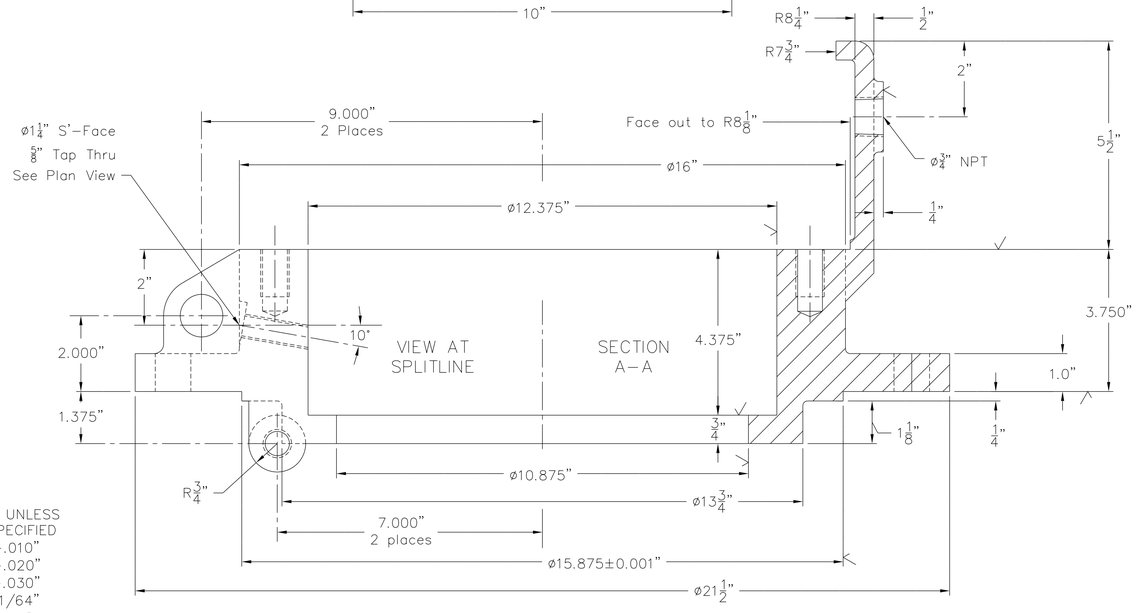

AS–CONSTRUCTED

QUANTITY	ITEM NO	PART NAME, TYPE	LB. EACH	REFERENCE	MATERIAL
1	13	Braided Packing–3/4" SQ. x 15 ft (4 lbs)	–	–	PTFE/Graphite –
1	12	Packing Gland–Saw Split	30	GSM	BRZ. C936, MOD SAE 64 JLC: X50580–2
1	11	Lantern Ring–Saw Split	6	GSM	BRZ. C936, MOD SAE 64 JLC: X50580–3
6	10	ø3/4" Hex Nuts	–	GSM	Silicon Bronze –
6	9	ø3/4" x 4" Lg. Thd. Rod (Gland Studs)	–	GSM	18–8 Stainless McMaster: 95412A851
8	8	ø7/8"–9 x 2" Lg. HHCS	–	GSM	Gr. 8 Steel, Zinc Pl –
2	7	ø5/8"–11 Hex Jam Nut	–		18–8 S/S –
1	6	ø5/8"–11 x 3" Lg. Thd. Rod	–		ASTM A193 Gr. B8 McMaster: 91187A602
2	5	ø1"–8 x 2" Lg. SHCS	–		18–8 S/S –
2	4	ø3/4"–10 x 2" Lg. SHCS	–		18–8 S/S –
1	3	Upper Half, Packing Box	100	Patt 7696	Ductile Iron ASTM A536,Gr.65–45–12
1	2	Lower Half, Packing Box	120	Patt 7696	Ductile Iron ASTM A536,Gr.65–45–12
1	1	Packing Box Assembly	(220)		

TOLERANCES; UNLESS OTHERWISE SPECIFIED
X.XXX= +/–.010"
X.XX= +/–.020"
X.X= +/–.030"
Frac.= +/–1/64"
Angle= +/– 1 Deg.
Break All Edges .005"/.010"
√ = 125 RMS

NOTES:
1.) Packing Box to be prepared and painted per Section 09 97 02.00 26

CURRENT REV. A

REVISIONS

REV.	DATE	BY	CHANGES
A	09/12/12	JRW	–AS–CONSTRUCTED– NO CHANGES FROM REV –

Quality Service Since 1862

DATE	DRAWN BY	CHECKED BY
11/06/10	JR Ward	A DYNGE
SCALE	UNIT NUMBER	APPROVED BY
AS NOTED	W–3036	

The James Leffel & Co.
Manufacturers of
HYDRAULIC TURBINES

USACE–PORTLAND
JOHN DAY DAM, RUFUS, OR
PURCHASER: SITE

CONTRACT NO: W9127N–10–C–0029

CLIN 0021 | NEXT ASSEMBLY 54100

DRAWING TITLE
PACKING BOX–NEW,
for MAIN SHAFT
CAST and MACHINE

DRAWING NUMBER 54104

ORDER NUMBER R–120627

SHEET SIZE ANSI–D | SHEET NO 1 OF 1

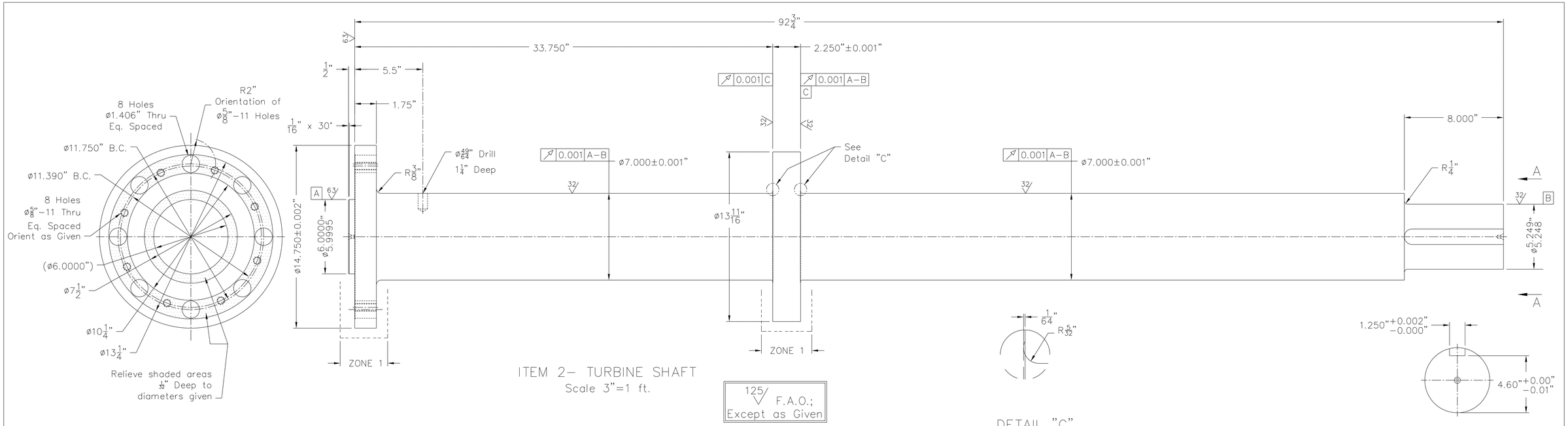

ITEM 2– TURBINE SHAFT
Scale 3"=1 ft.

125 F.A.O.; Except as Given

DETAIL "C"
Scale– 24"=1 ft.

VIEW A–A
Scale 3"=1 ft

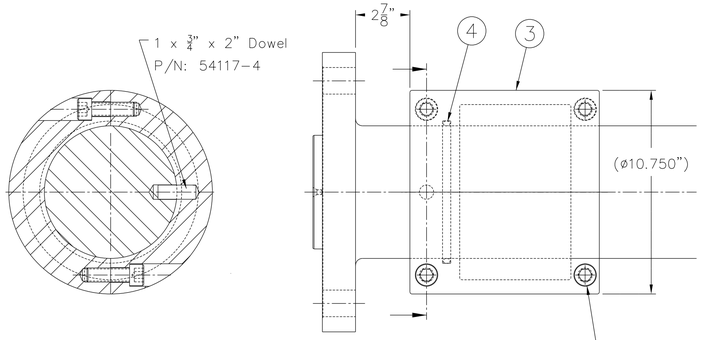

ASSEMBLY DETAIL
TURBINE SHAFT & SLEEVE
Scale– 3"=1 ft.

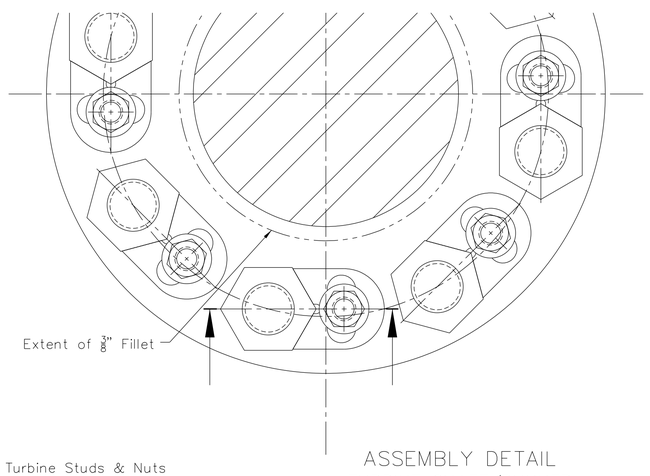

ASSEMBLY DETAIL
TURBINE SHAFT/RUNNER
Scale– 6"=1 ft.

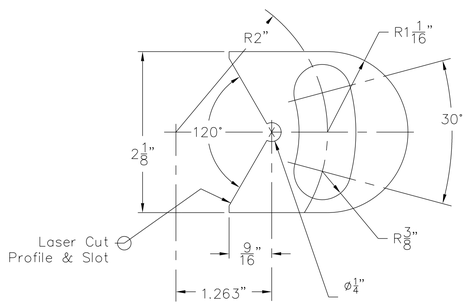

ITEM 5– RUNNER STUD NUT RETAINER
Scale– FULL

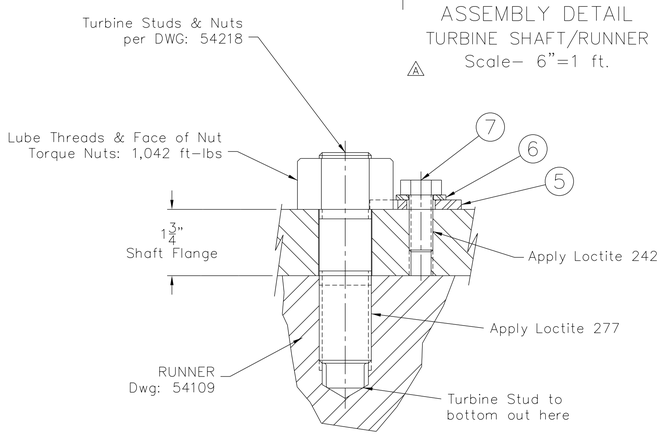

AS–CONSTRUCTED

2.) POST FINAL MACHINING NDT– 100% Dye Penetrant (PT)
- Evaluation/acceptance of indications per ASME Sec. VIII, Div. 1, App. 8

1.) ROUGH TURNED SHAFT FORGING
- Shaft to be made according to ASTM A668, Class D
- Rough turn forging to allow 1/8" to 3/16" stock per surface for finishing
- Test specimens per ASTM 668
- NDT requirements:
  - 100% Magnetic Particle MT:
    Evaluation/acceptance of indications per ASME Sec. VIII, Div. 1, App. 6
  - UT of ZONE 1
    Acceptance: –No cracks, No individual indications greater than ø1/8", No group indications

NOTES:

QUANTITY	ITEM NO.	PART NAME, TYPE	LB. EACH	REFERENCE	MATERIAL
8	7	ø5/8"-11" x 1-1/2" HHCS	–		18-8 S/S –
8	6	ø5/8" Washer	–		18-8 S/S– SAE –
8	5	Runner Stud Nut Retainer	–	–	1/4" 304 SS Plate ASTM A240/A 240M
1	4	5/16" □-Ring Chord (Make Around Shaft)	–	–	Viton KFM, Shore A: 75 –
1	3	Shaft Sleeve w/SHCS & Dowel Assy	150	54117	– –
1	2	Turbine Shaft-NEW	1,115		Carbon Steel Forging ASTM A668, CL D
1	1	Turbine Shaft/Shaft Sleeve Assembly	(1,265)		– –

B CURRENT REV.

REVISIONS

REV.	DATE	BY	CHANGES
A	09/30/11	JRW	-REVISED ASSEMBLY DETAIL PER RFI-0029
B	09/12/12	JRW	-AS-CONSTRUCTED- NO CHANGES FROM REV A

Quality Service Since 1862

The James Leffel & Co.
Manufacturers of
HYDRAULIC TURBINES

DATE 10/23/10	DRAWN BY JR Ward	CHECKED BY A DYNGE
SCALE AS NOTED	UNIT NUMBER W-3036	APPROVED BY

CONTRACT NO: W9127N-10-C-0029

CLIN 0020 | NEXT ASSEMBLY 54100

DRAWING TITLE
TURBINE SHAFT-NEW and TURBINE SHAFT SLEEVE INSTALLATION

DRAWING NUMBER 54105

SHEET SIZE ANSI-D | SHEET NO OF 1 1

PURCHASER: USACE-PORTLAND JOHN DAY DAM, RUFUS, OR

ORDER NUMBER R-120627

TOLERANCES; UNLESS OTHERWISE SPECIFIED
X.XXX= +/-.010"
X.XX= +/-.020"
X.X= +/-.030"
Frac.= +/-1/64"
Angle= +/- 1 Deg.
Break All Edges .005"/.010"
√ = 125 RMS

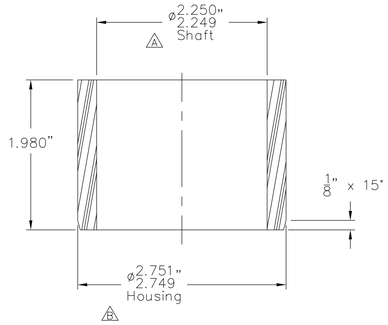

DESIGN DATA– ITEM 4
Scale– FULL

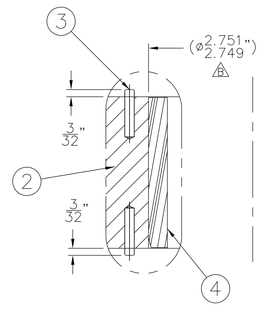

DETAIL "X"
ITEM 1 ASSEMBLY
Scale– FULL

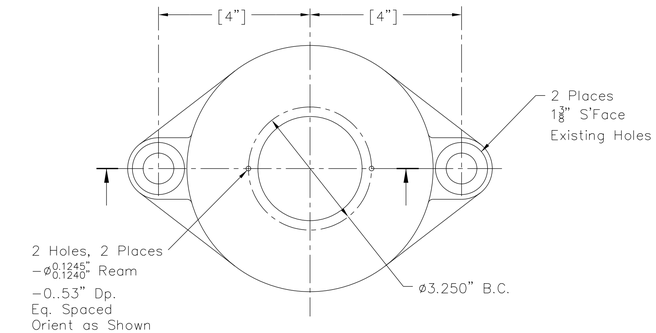

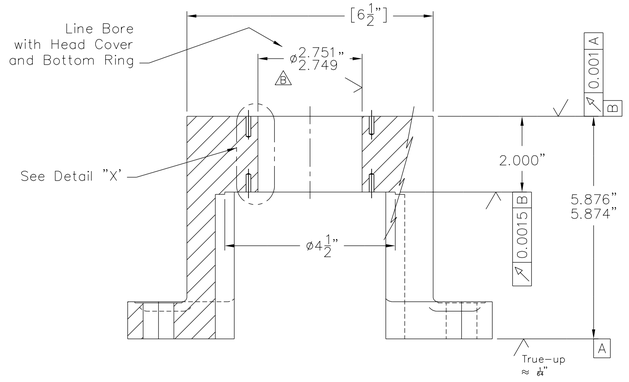

ITEM 2– GATE STEM SUPPORT
ALTER EXISTING
Scale– 6"=1 ft.

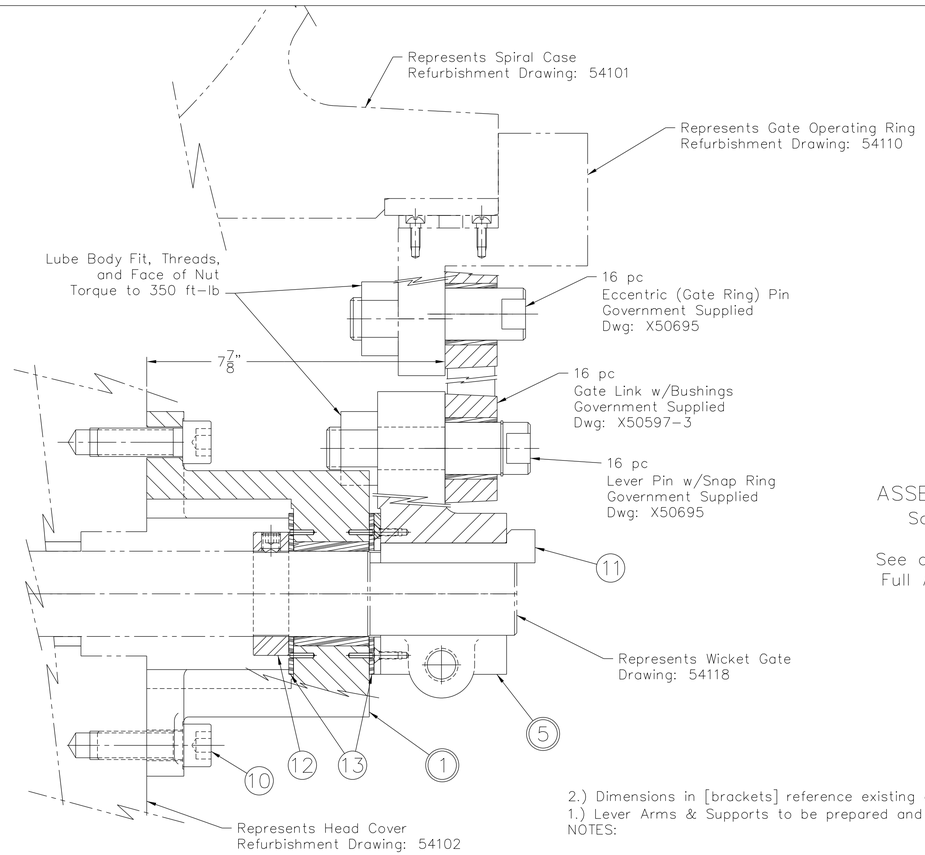

ASSEMBLY SECTION
Scale– 6"=1 ft.

See drawing 54100 for
Full Assembly Section

2.) Dimensions in [brackets] reference existing dimensions.
1.) Lever Arms & Supports to be prepared and painted per Section 09 97 02.00 26
NOTES:

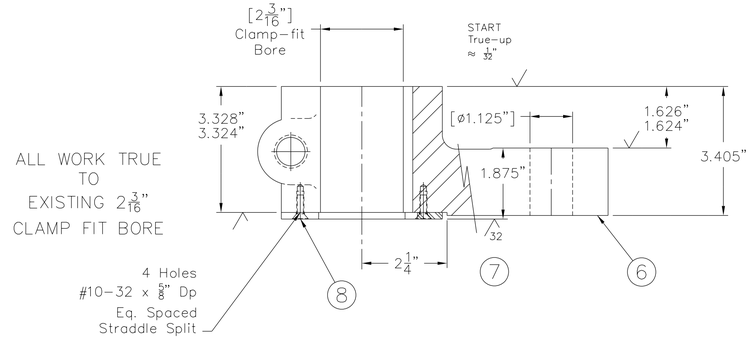

ALL WORK TRUE
TO
EXISTING 2 3/16"
CLAMP FIT BORE

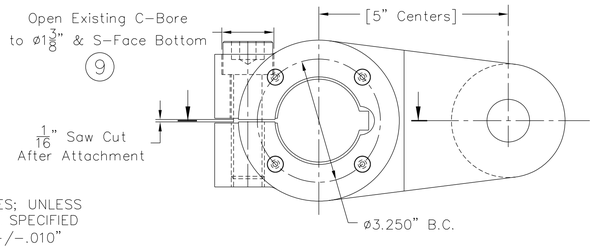

TOLERANCES; UNLESS
OTHERWISE SPECIFIED
X.XXX= +/–.010"
X.XX= +/–.020"
X.X= +/–.030"
Frac.= +/–1/64"
Angle= +/– 1 Deg.
Break All Edges .005"/.010"
√ = 125 RMS

ITEM 5– LEVER ARM ASSEMBLY
ALTER EXISTING ARMS
Scale– 6"=1 ft.

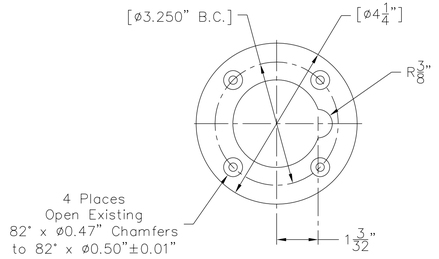

ITEM 7– LEVER ARM FACE PLATE
ALTER GSM
Scale– 6"=1 ft.

Government supplied
Lever Face Plates
Dwg: 53396

Alter by cutting R 3/8" and
increasing 82° chamfer diameters

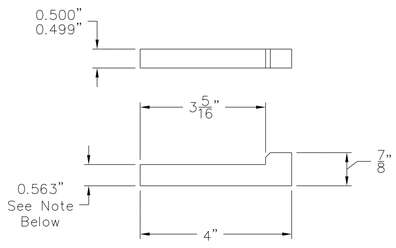

*0.563" Thickness to be cut for
fit @ Shop Assembly

ITEM 11– GIB HEAD WG KEY
Scale– 6"=1 ft.

AS–CONSTRUCTED

QUANTITY	ITEM NO.	PART NAME, TYPE	LB. EACH	REFERENCE	MATERIAL
32	13	Wicket Gate Thrust Washer	–	GSM	Non–Lube Composite Orkot: GDZUE0371–TXMM
16	12	WG Thrust Collar (Shaft Collar)	–	GSM	Type 303 S/S –
16	11	Gib Head WG Key	–		Carbon Steel, ANSI 1018
32	10	ø3/4"–10 x 2–1/4"SHCS	–		Alloy Steel –
16	9	ø7/8"–9 x 2–3/4" SHCS	–	–	Alloy Steel –
64	8	#10–32 x 5/8" FHSHCS	–	GSM	18–8 S/S –
16	7	Lever Arm Face Plate–Alter	–	GSM	304 SS –
16	6	Lever Arm– Existing	25		Cast Steel ASTM A27–60 Gr 65–35
16	5	Lever Arm Assembly	(26)		– –
16	4	Gate Stem Support Bushing	–		Non–Lube Composite Trelleborg#: GBND000367T7XMM
48	3	ø1/8" x 5/8" Dowel, (Antri–Rotation)	–		18–8 S/S –
16	2	Gate Stem Support– Existing	25		Cast Iron QQ–I–652a–CL 30
16	1	Gate Stem Support Assembly	(25)		– –

REV.	DATE	BY	CHANGES
A	02/18/11	JRW	–DESIGN SHAFT DIA FOR ITEM 4 WAS ø2.251"/2.249"
B	09/30/11	JRW	–HOUSING BORE WAS 2.626"/2.624" –ALTERED BUSHING/OTHER DETAILS FOR 2.751"/2.749"
C	09/12/12	JRW	–AS–CONSTRUCTED– NO CHANGES FROM REV B

CURRENT REV. C
REVISIONS

Quality Service Since 1862

DATE 11/24/10	DRAWN BY JR Ward	CHECKED BY A DYNGE	
SCALE AS NOTED	UNIT NUMBER W–3036	APPROVED BY	

USACE–PORTLAND
JOHN DAY DAM, RUFUS, OR
PURCHASER, SITE

R–120627
ORDER NUMBER

CONTRACT NO: W9127N–10–C–0029

DRAWING TITLE
GATE OPERATING LINKAGE
LEVER ARM and SUPPORT
REFURBISHMENT WORK

The James Leffel & Co.
Manufacturers of
HYDRAULIC TURBINES

CLIN: 0009, 0015, 0016
NEXT ASSEMBLY: 54100

DRAWING NUMBER: 54106

SHEET SIZE: ANSI–D
SHEET NO: 1 OF 1

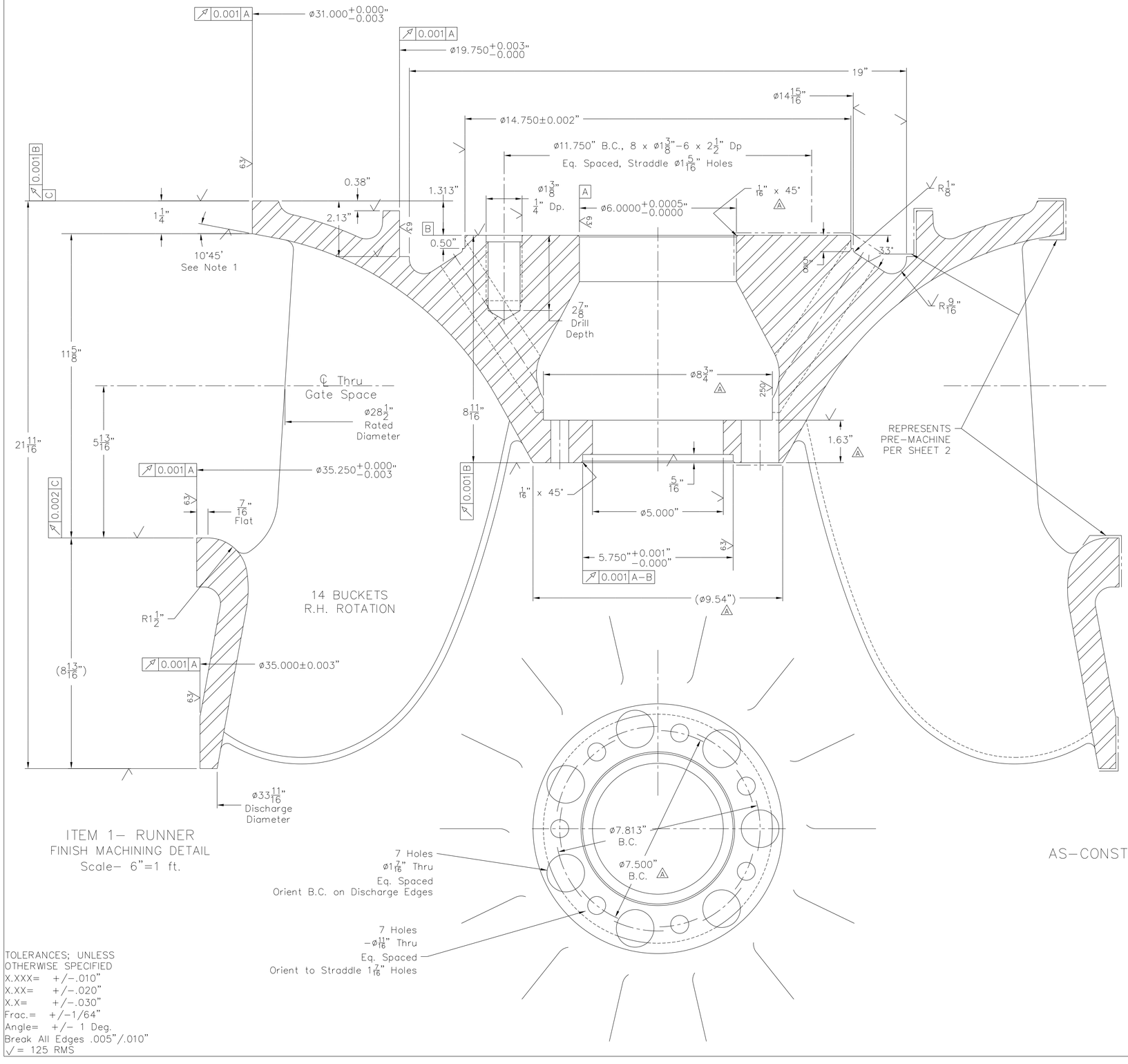

ITEM 1− RUNNER
FINISH MACHINING DETAIL
Scale− 6"=1 ft.

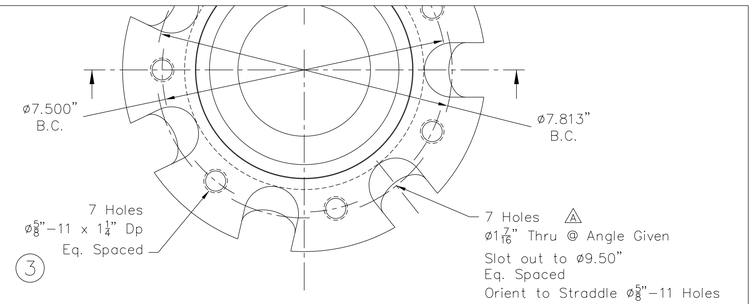

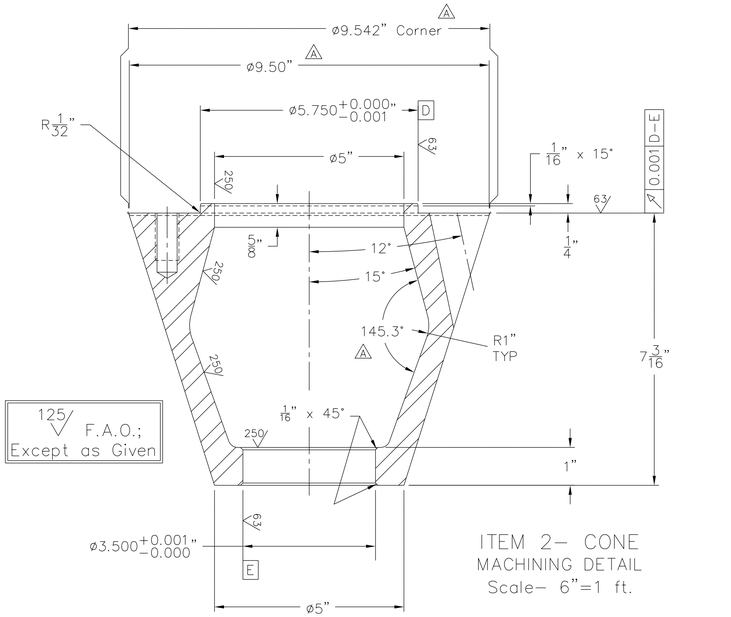

ITEM 2− CONE
MACHINING DETAIL
Scale− 6"=1 ft.

AS−CONSTRUCTED

3.) POST FINAL MACHINING NDT− 100% Dye Penetrant (PT)
−Evaluation/acceptance of indications per ASME Sec. VIII, Div. 1, App. 8
2.) Runner/Cone Assembly to be static balanced per ISO 1940−1 Gr. G−16
−Lube and torque Item 3 SHCS to 75 ft−lbs
−Match mark cone to runner
1.) These dimensions are reference and should be altered as needed to blend best case with adjacent as−cast surfaces
NOTES:

TOLERANCES; UNLESS OTHERWISE SPECIFIED
X.XXX= +/−.010"
X.XX= +/−.020"
X.X= +/−.030"
Frac.= +/−1/64"
Angle= +/− 1 Deg.
Break All Edges .005"/.010"
√ = 125 RMS

QUANTITY	ITEM NO.	PART NAME, TYPE	LB. EACH	REFERENCE	MATERIAL
A 7	3	ø5/8"−11 x 2−1/2" SHCS	−	−	18−8 S/S −
1	2	Cone	45	Patt 10264	Cast Chromium Stainless ASTM A 743, Gr. CA6NM
1	1	Runner	1,200	Patt 10265	Cast Chromium Stainless ASTM A 743, Gr. CA6NM

REVISIONS
CURRENT REV. B

REV.	DATE	BY	CHANGES
A	03/01/11	JRW	−CORRECTED NOSE END OF HUB; RE−DESIGNED CONE −REDESIGNED CENTER CORE −ADDED 1/16" X 45° TO ø6.0000"
B	09/12/12	JRW	−AS−CONSTRUCTED− NO CHANGES FROM REV A

Quality Service Since 1862

The James Leffel & Co.
Manufacturers of
HYDRAULIC TURBINES

DATE 10/15/10	DRAWN BY JR Ward	CHECKED BY A DYNGE
SCALE AS NOTED	UNIT NUMBER W−3036	APPROVED BY

CONTRACT NO: W9127N−10−C−0029
CLIN 0005
NEXT ASSEMBLY 54100
DRAWING TITLE
ø28−1/2" LL RUNNER and CONE− NEW CAST & MACHINE
DRAWING NUMBER 54109
SHEET SIZE ANSI−D
SHEET NO 1 OF 2

USACE− Portland
John Day Dam, Rufus, OR
PURCHASER, SITE
R−120627
ORDER NUMBER

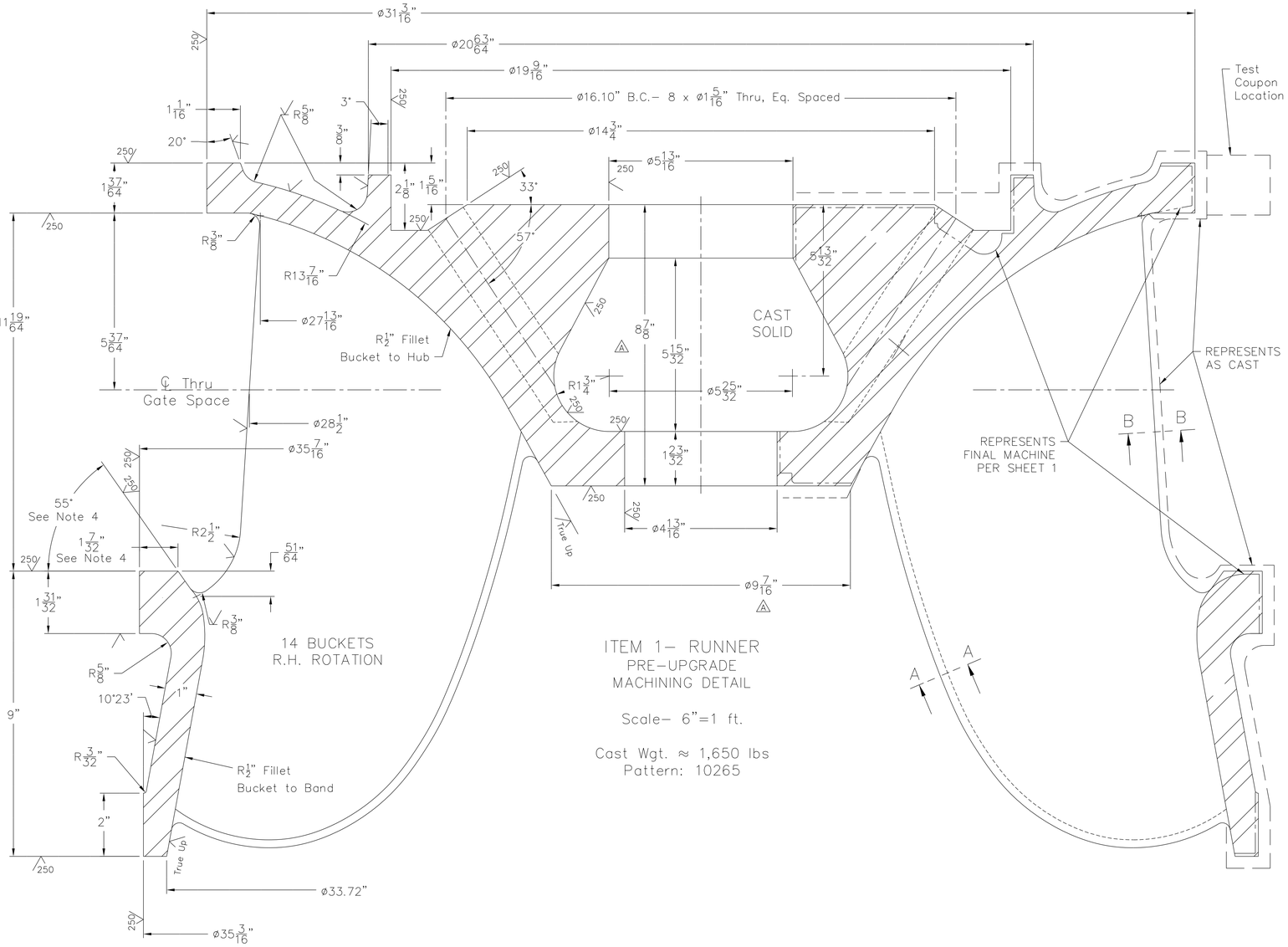

ITEM 1– RUNNER
PRE–UPGRADE
MACHINING DETAIL

Scale– 6"=1 ft.

Cast Wgt. ≈ 1,650 lbs
Pattern: 10265

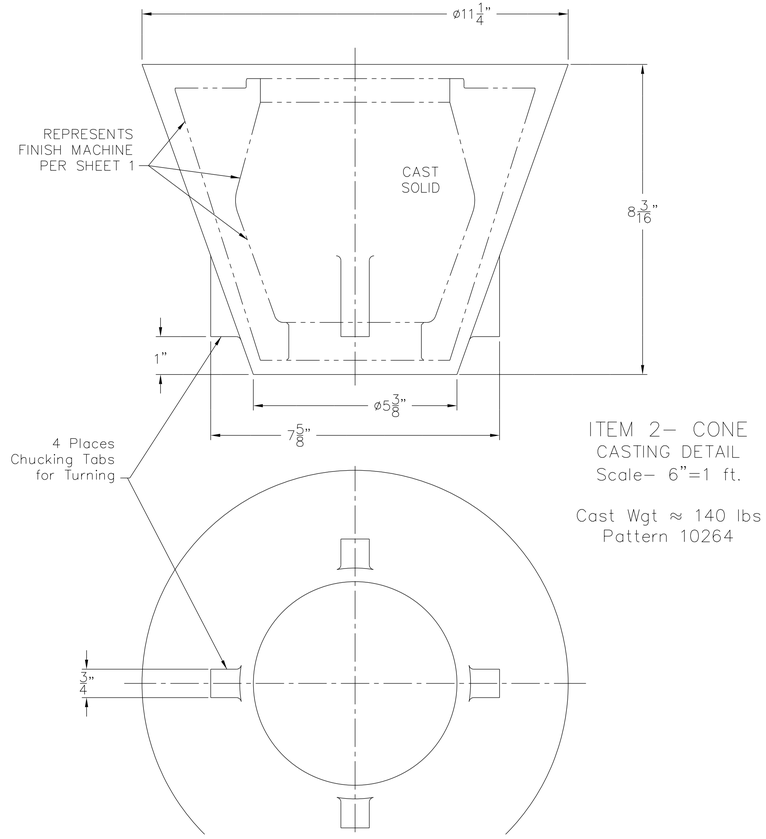

ITEM 2– CONE
CASTING DETAIL
Scale– 6"=1 ft.

Cast Wgt ≈ 140 lbs
Pattern 10264

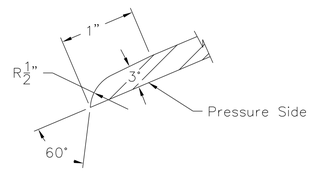

VIEW A–A
OUTLET EDGE SHAPING
Scale– FULL

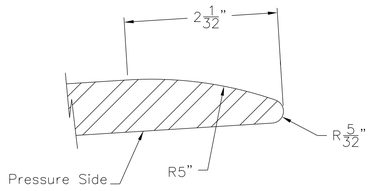

VIEW B–B
INLET EDGE SHAPING
Scale– FULL

AS–CONSTRUCTED

TOLERANCES; UNLESS
OTHERWISE SPECIFIED
X.XXX= +/–.010"
X.XX= +/–.020"
X.X= +/–.030"
Frac.= +/–1/64"
Angle= +/– 1 Deg.
Break All Edges .005"/.010"
√ = 125 RMS

4.) These dimensions are reference and should be altered as needed to blend best case with adjacent as–cast surfaces
3.) After pre–machining, casting to be upgraded, passage ways hydraulically ground, and inlet/outlet edges shaped and ground
NDT Requirements for surfaces considered at final condition:
100% Liquid Penetrant (PT) per ASME Sec. VIII, Div. 1, App. 8
2.) Casting NDT Requirements:
100% Visual (VT)
100% Magnetic Particle (MT) per ASME Sec VIII, Div. I, App. 6
1.) New pattern equipment to be made based on original design data and per above Pre–Upgrade Machining detail
NOTES:

QUANTITY	ITEM NO.	PART NAME, TYPE	L.B. EACH	REFERENCE	MATERIAL

REV.	DATE	BY	CHANGES
A	09/30/11	JRW	SEE SHEET 1
B	09/12/12	JRW	SEE SHEET 1

B CURRENT REV. — REVISIONS

Quality Service Since 1862

The James Leffel & Co.
Manufacturers of
HYDRAULIC TURBINES

DATE	DRAWN BY	CHECKED BY
10/15/10	JR Ward	A DYNGE

SCALE	UNIT NUMBER	APPROVED BY
AS NOTED	W–3036	

CONTRACT NO: W9127N–10–C–0029

DRAWING TITLE: ø28–1/2" LL RUNNER and CONE– NEW CAST & MACHINE

CLIN	NEXT ASSEMBLY
0005	Sheet 1

DRAWING NUMBER: 54109

SHEET SIZE	SHEET NO. OF
ANSI–D	2 2

USACE– Portland
John Day Dam, Rufus, OR
PURCHASER, SITE

R–120627
ORDER NUMBER

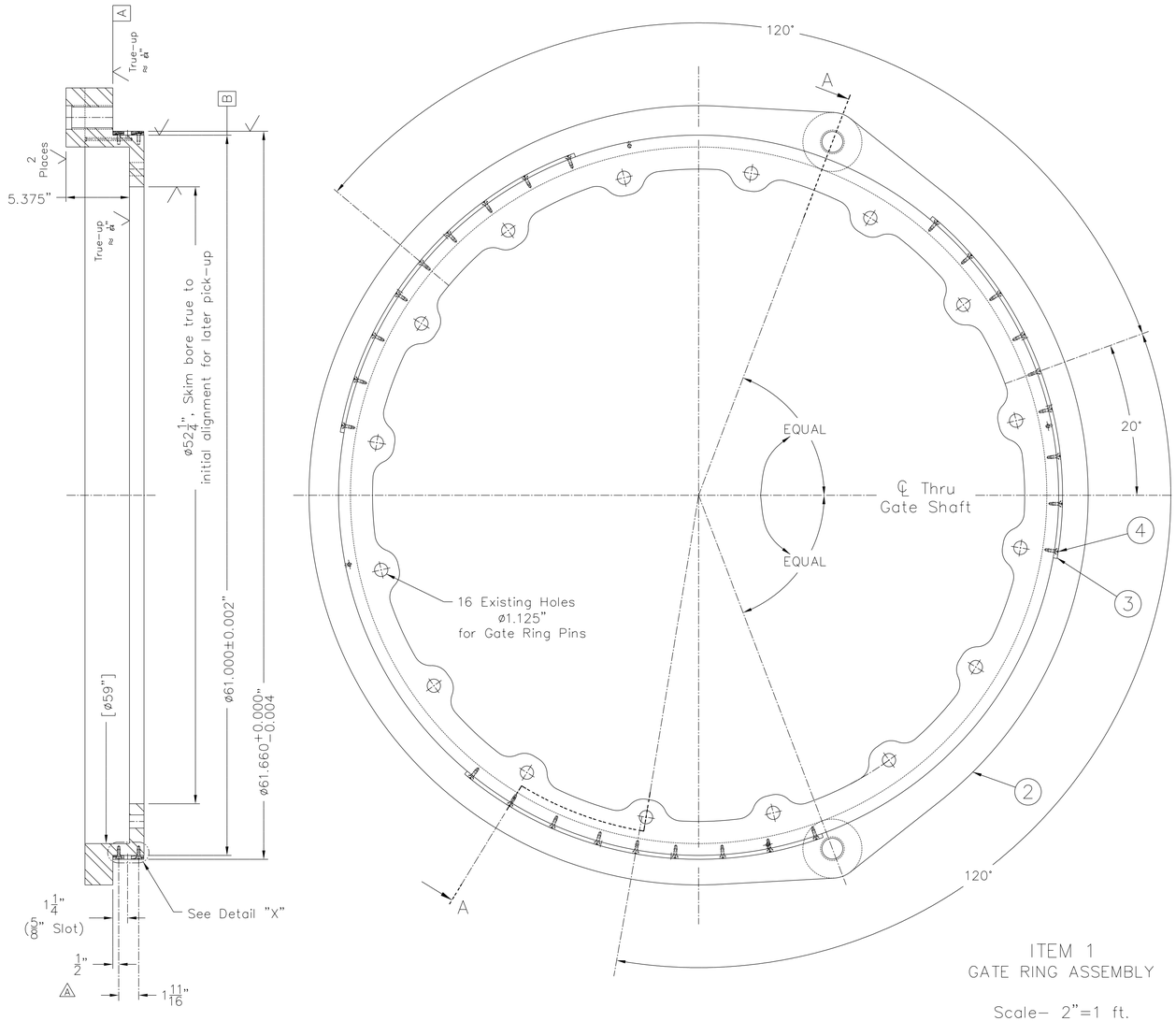

ITEM 1
GATE RING ASSEMBLY

Scale– 2"=1 ft.

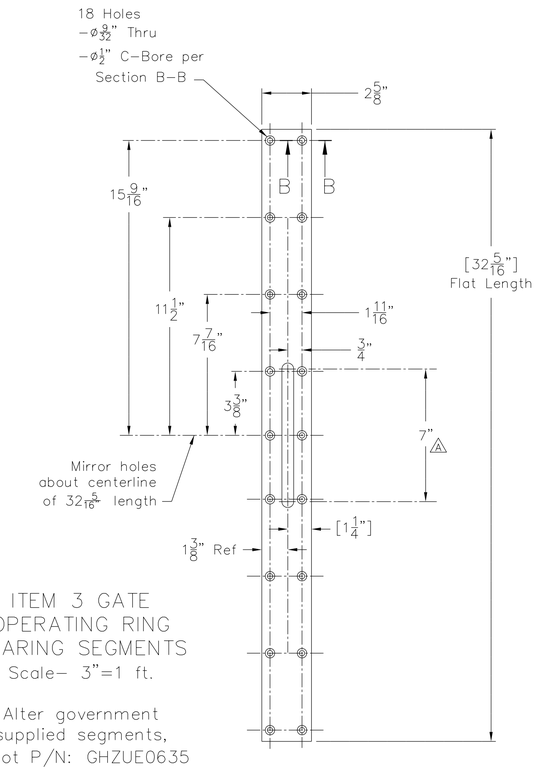

ITEM 3 GATE
OPERATING RING
BEARING SEGMENTS
Scale– 3"=1 ft.

Alter government
supplied segments,
Orkot P/N: GHZUE0635

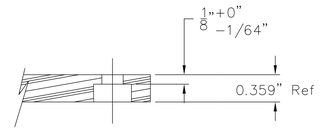

SECTION B–B
Scale– FULL

OUTLINE OF WORK:

A 1.) Alter government supplied bearing segments (Item 3) as shown in detail
–Machine mounting holes and lengthen slot
NOTE ORIENTATION OF HOLES VERSUS 5/8" SLOT

2.) Align Item 2 gate ring to existing surface "A" and diameter –B–, machine as given in main view, including skim bore of ø52 1/4"

3.) Attach bearing segments as given in Detail "X" and as oriented in main view

4.) Align to surface "A" and the skim bored ø52 1/4". Turn segments to finish diameter

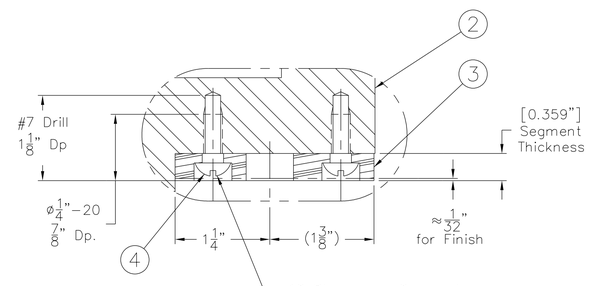

DETAIL "X"
SEGMENT ATTACHMENT
Scale– FULL

AS–CONSTRUCTED

QUANTITY	ITEM NO.	PART NAME, TYPE	LB. EACH	REFERENCE	MATERIAL
54	4	ø1/4"–20 x 5/8" Round Hd. Slotted Screw	–		Silicon Bronze –
3	3	Operating Ring Bearing 60° Segments	–	GSM	Orkot TXMM ORKOT P/N: GHZUE0635
1	2	Gate Operating Ring– Existing	900		CastSteel ASTM A27–60 Gr. 65–35
1	1	Gate Operating Ring– Assembly	(900)		–

REV.	DATE	BY	CHANGES
A	06/10/11	JRW	–SIDE VIEW: 1/2" WAS 7/16"; 1–11/16" WAS 1–3/4" –ITEM #3 DETAIL: 7" SLOT LENGTH WAS 6"
B	09/12/12	JRW	–AS–CONSTRUCTED– NO CHANGES FROM REV A

B CURRENT REV.

DATE 11/22/10 | DRAWN BY JR Ward | CHECKED BY A DYNGE
SCALE AS NOTED | UNIT NUMBER W–3036 | APPROVED BY

CONTRACT NO. W9127N–10–C–0029

DRAWING TITLE
GATE OPERATING RING
REFURBISHMENT
WORK

USACE–PORTLAND
JOHN DAY DAM, RUFUS, OR
PURCHASER, SITE

R–120627
ORDER NUMBER

Quality Service Since 1862

The James Leffel & Co.
Manufacturers of
HYDRAULIC TURBINES

CLIN 0019 | NEXT ASSEMBLY 54100

DRAWING NUMBER 54110

SHEET SIZE ANSI–D | SHEET NO 1 OF 1

TOLERANCES; UNLESS
OTHERWISE SPECIFIED
X.XXX= +/–.010"
X.XX= +/–.020"
X.X= +/–.030"
Frac.= +/–1/64"
Angle= +/– 1 Deg.
Break All Edges .005"/.010"
√ = 125 RMS

2.) Dimensions in [brackets] reference existing dimensions.
1.) Gate Ring to be prepared and painted per Section 09 97 02.00 26
NOTES:

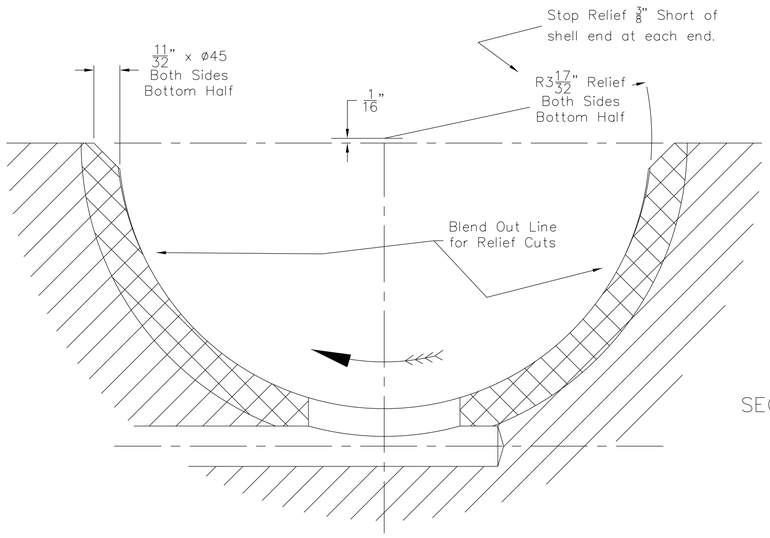

SECTION B–B
Full Scale

TOLERANCES; UNLESS OTHERWISE SPECIFIED
X.XXX= +/–.010"
X.XX= +/–.020"
X.X= +/–.030"
Frac.= +/–1/64"
Angle= +/– 1 Deg.
Break All Edges .005"/.010"
√ = 125 RMS

SEE ORIGINAL DRAWING 50604 FOR ADDITIONAL DETAILS

SEE SHEET 2 FOR BEARING ASSEMBLY DETAIL

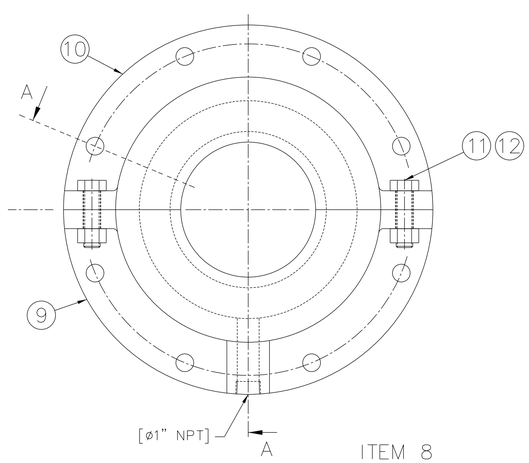

ITEM 8
END COVER–SPLIT
Scale– 3"=1 ft

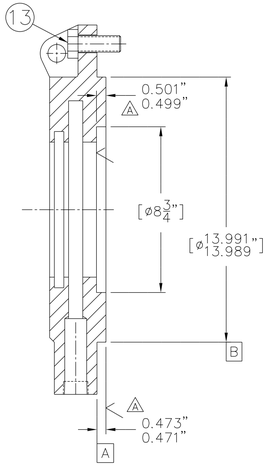

SECTION A–A

End Cover Assembly– OUTLINE OF WORK
1.) Assembly cover to housing (Ref Sheet 2 Assembly Detail) with shaft and bearing element in place
2.) Check end play
3.) Adjustments in end play to be made by adjustments in 0.481"/0.479" dimension
–Any adjustment may require re–establishing the 0.501"/0.499" dimension
4.) Cover to be painted in accordance with 09 97 02.00 26

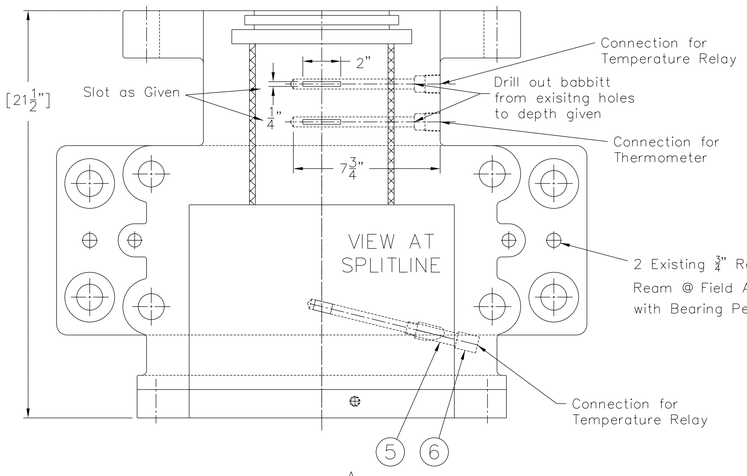

ITEM 2
BEARING HOUSING
Scale– 3"=1 ft

Bearing Housing– Outline of Refurb
1.) Map existing bearing
2.) Remove existing babbitt, Kolene salt bath, tin, and re–babbitt
–Babbitting to be in accordance with 48 13 13.07 26
3.) UT/PT examination of babbitt bond
4.) Check split line surfaces for flatness and mating
–Split line joint shall not allow a 0.002" feeler gauge will not go thru at any place.
5.) Skim cut bottom surface "A"
6.) For finish boring torque 1 1/4"–7 Bolts to 200–250 ft–lbs Lubed
7.) Final P/T and dimensional inspection
8.) Bearing to be painted in accordance with 09 97 02.00 26

Dimensions in [brackets]
reference existing dimensions

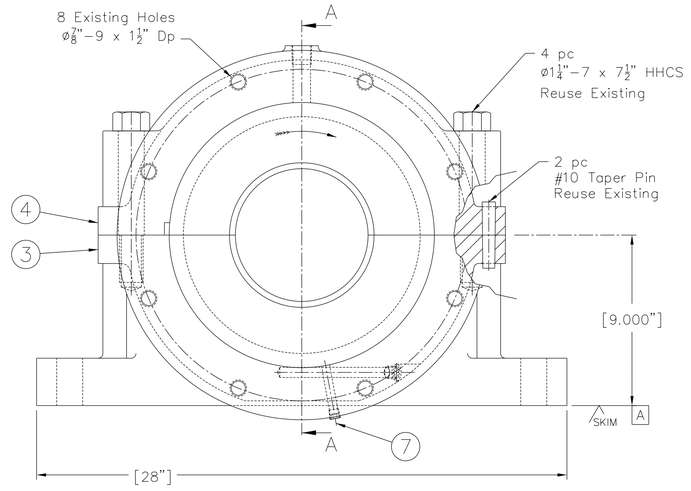

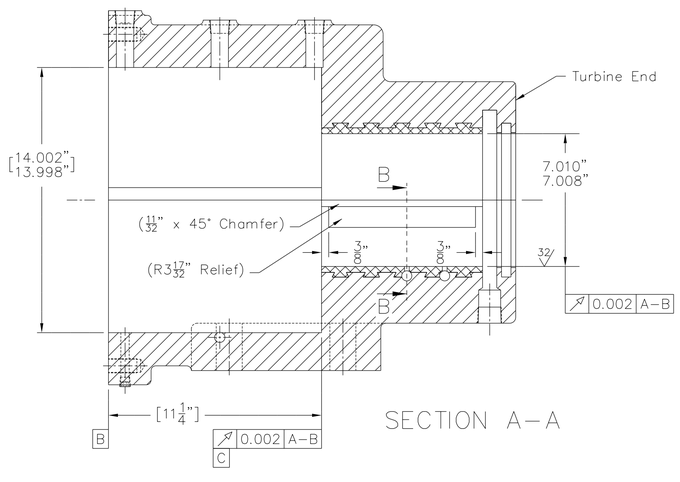

SECTION A–A

AS–CONSTRUCTED

QUANTITY	ITEM NO.	PART NAME, TYPE	L.B. EACH	REFERENCE	MATERIAL
1	16	Seal Ring	–	GSM	Kingsbury Bronze
1	15	Bearing Element, JJ-13-1/2	250	GSM	Kingsbury Carbon Steel/Babbitt
2	14	Felt Ring, Make from 1/2" Square- NEW	–		Wool Felt, Gr. F5 – –
1	13	7/8"–9 x 2-1/4" HHCS- NEW	–		Grade 5, Zinc – –
2	12	ø7/8"–9 Hex Nut- NEW			Grade 5, Zinc – –
2	11	ø7/8"–9 x 3" HHCS- NEW	–		Grade 5, Zinc – –
1	10	End Cover- Upper Half- Existing	100		– –
1	9	End Cover- Lower Half- Existing	100		– –
1	8	End Cover- Split	–		– –
1	7	ø3/8" NPT Hex Socket Pipe Plug-NEW	–		302 SS – –
1	6	ø3/8" NPT Straight Coupling-NEW	–		304 SS – –
1	5	ø3/8" NPT x 3" Nipple, Sch 40-NEW	–		304 SS – –
1	4	Bearing Cap- Existing	350		Cast Iron – –
1	3	Bearing Base- Existing	500		Cast Iron – –
1	2	Inboard Bearing Housing	(850)		– –
1	1	Inboard Bearing Assembly	[1300]		– –

CURRENT REV: B

REVISIONS:
A 11/11/11 JRW –ALT. 0.481"/0.479" TO ACHIEVE 0.02" THURST CLEAR.
B 09/12/12 JRW –AS–CONSTRUCTED– NO CHANGES FROM REV A

Quality Service Since 1862

The James Leffel & Co.
Manufacturers of
HYDRAULIC TURBINES

USACE–PORTLAND
JOHN DAY DAM, RUFUS, OR
PURCHASER, SITE

R-120627
ORDER NUMBER

DATE: 08/01/11
DRAWN BY: JR Ward
CHECKED BY:
SCALE: AS NOTED
UNIT NUMBER: W-3036
APPROVED BY:

CONTRACT NO: W9127N-10-C-0029

CLIN: 0034AC
NEXT ASSEMBLY: SHEET 2

DRAWING TITLE
TURBINE INBOARD BEARING REBABBITT REFURBISHMENT

DRAWING NUMBER
54111

SHEET SIZE: ANSI-D
SHEET NO OF: 1 2

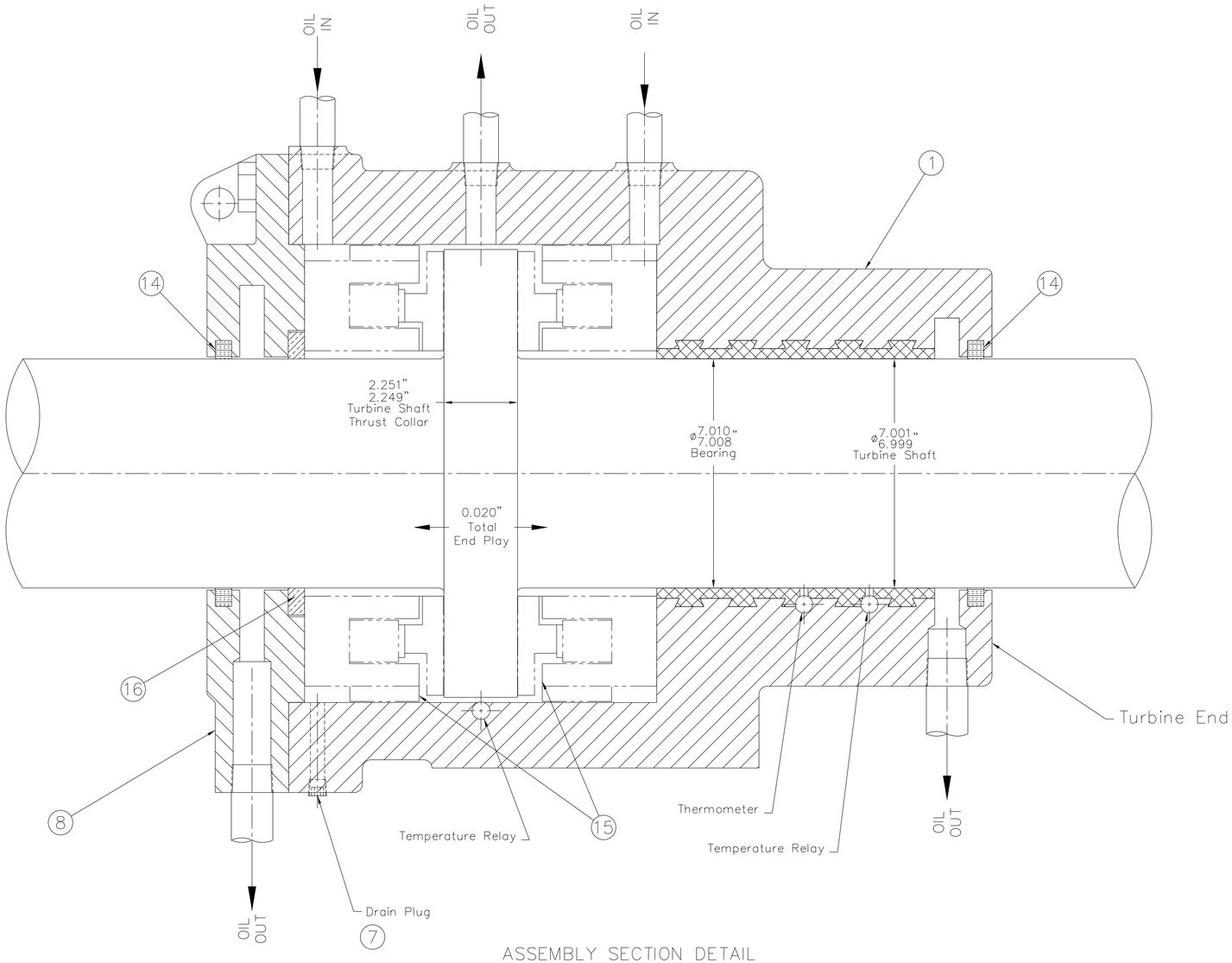

ASSEMBLY SECTION DETAIL
Scale- 6"=1 ft.

AS-CONSTRUCTED

** SEE SHEET 1 FOR PARTS/MATERIAL LIST **

QUANTITY	ITEM NO.	PART NAME, TYPE	LB. EACH	REFERENCE	MATERIAL

REVISION: CURRENT REV. B

REV.	DATE	BY	CHANGES
A	11/11/11	JRW	-SEE SHEET 1
A	09/12/12	JRW	-SEE SHEET 1

Quality Service Since 1862

DATE	DRAWN BY	CHECKED BY
08/01/11	JR Ward	
SCALE	UNIT NUMBER	APPROVED BY
AS NOTED	W-3036	

The James Leffel & Co.
Manufacturers of
HYDRAULIC TURBINES

CONTRACT NO: W9127N-10-C-0029

CLIN 0034AC | NEXT ASSEMBLY 54100

DRAWING TITLE
TURBINE INBOARD BEARING
REBABBITT
REFURBISHMENT

DRAWING NUMBER 54111

SHEET SIZE ANSI-D | SHEET NO 2 OF 2

USACE-PORTLAND
JOHN DAY DAM, RUFUS, OR
PURCHASER, SITE

ORDER NUMBER R-120627

TOLERANCES; UNLESS
OTHERWISE SPECIFIED
X.XXX= +/-.010"
X.XX= +/-.020"
X.X= +/-.030"
Frac.= +/-1/64"
Angle= +/- 1 Deg.
Break All Edges .005"/.010"
√ = 125 RMS

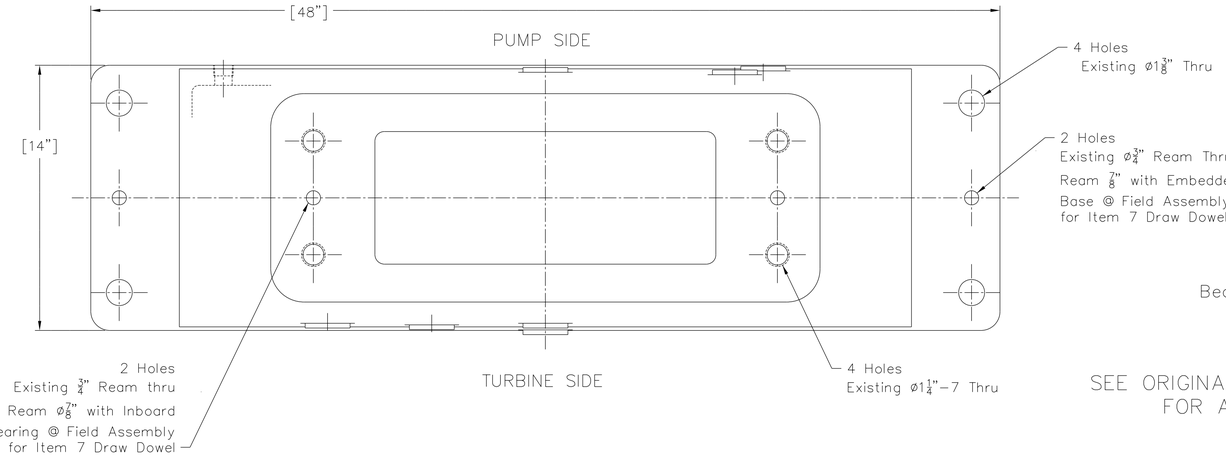

ITEM 1
Bearing Pedestal Assy
Scale 3"=1 ft.

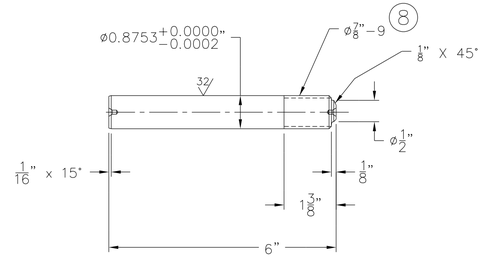

ITEM 7– DRAW DOWEL
Scale–6"=1 ft

SEE ORIGINAL LEFFEL DRAWING 50599
FOR ADDITIONAL DETAILS

Outline of Work
1.) Slim cut surface "A"
2.) Machine top surface true to "A" and given dimension.

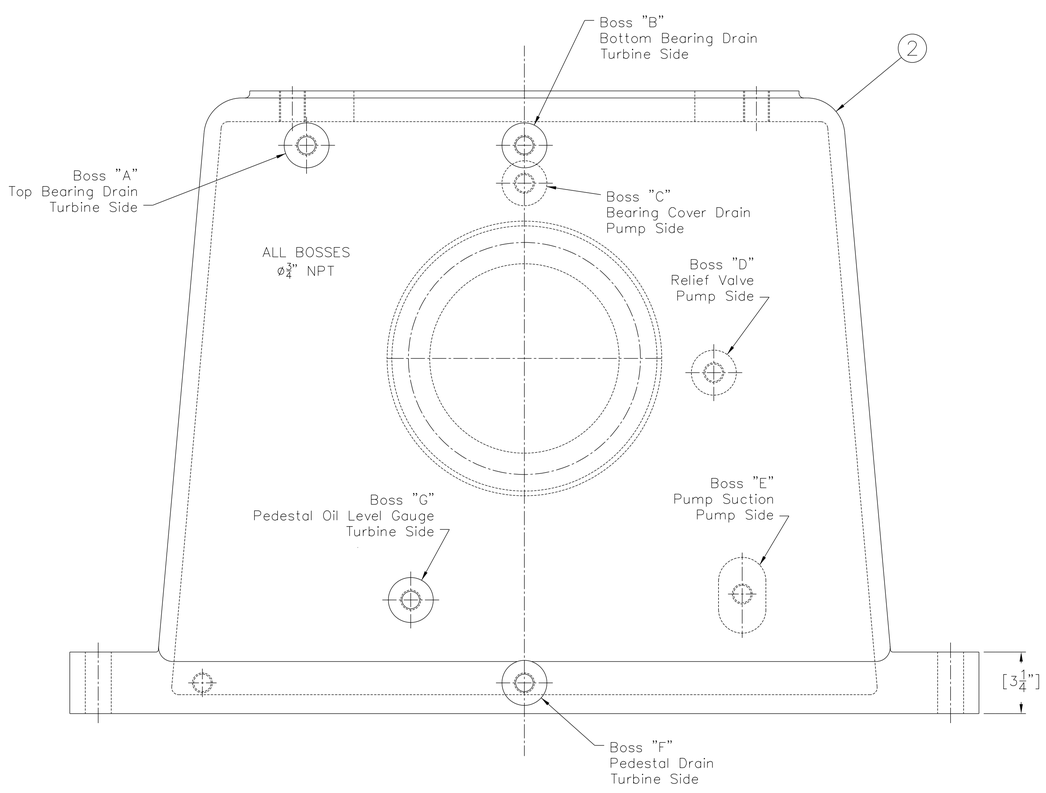

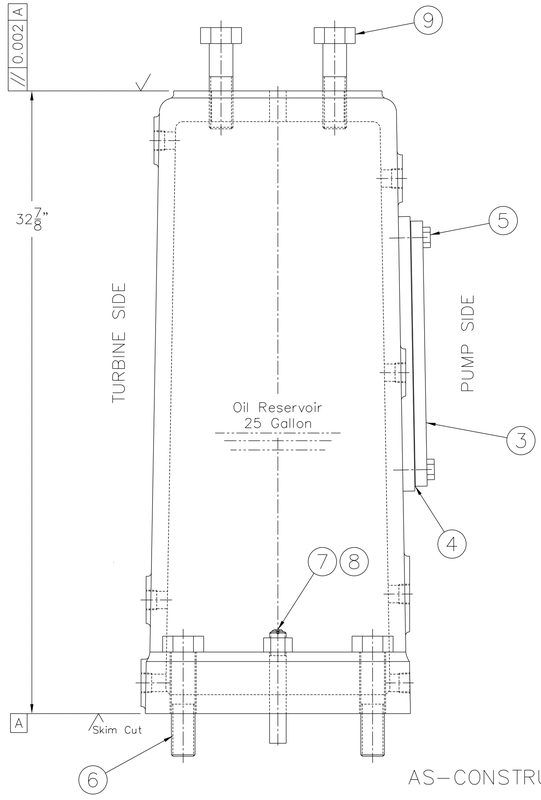

AS–CONSTRUCTED

QUANTITY	ITEM NO.	PART NAME, TYPE	LB. EACH	REFERENCE	MATERIAL
4	9	ø1-1/4"-7 x 4-1/2" HHCS-NEW	–		Grade 5, Plain – –
4	8	ø7/8"-9 Hex Nut-NEW	–		Grade 5, Plain – –
4	7	ø7/8" x 6" Draw Dwls per Detail-NEW	–		4140-HT, RC 28-32 –
4	6	ø1-1/4"-7 x 5-1/2" HHCS	–		Grade 5, Plain – –
10	5	ø5/8-11 x 1-1/2" HHCS-NEW	–		Grade 5, Plain – –
1	4	Gasket-NEW	–		Viton, FKM –
1	3	Handhole Cover-Existing	30		Cast Iron CL 30 –
1	2	Bearing Pedestal-Existing	970		Cast Iron CL 30 –
1	1	Bearing Pedestal Assy	(1,000)		– –

TOLERANCES; UNLESS
OTHERWISE SPECIFIED
X.XXX= +/–.010"
X.XX= +/–.020"
X.X= +/–.030"
Frac.= +/–1/64"
Angle= +/– 1 Deg.
Break All Edges .005"/.010"
√ = 125 RMS

2.) Pedestal supplied cleaned and finish painted by the government
After shop work, clean and touch–up paint
1.) Dimensions in [brackets] reference existing dimensions
Notes:

REV.	DATE	BY	CHANGES
A	09/12/12	JRW	-AS-CONSTRUCTED- NO CHANGES FROM REV –

CURRENT REV. A
REVISIONS

Quality Service Since 1862

DATE	DRAWN BY	CHECKED BY
08/01/11	JR Ward	
SCALE: AS NOTED	UNIT NUMBER: W-3036	APPROVED BY:

CONTRACT NO: W9127N-10-C-0029

DRAWING TITLE
BEARING PEDESTAL
TURBINE INBOARD BEARING
REFURBISHMENT

The James Leffel & Co.
Manufacturers of
HYDRAULIC TURBINES

CLIN	NEXT ASSEMBLY
0034AC	54100

DRAWING NUMBER
54112

SHEET SIZE	SHEET NO	OF
ANSI-D	1	1

USACE-PORTLAND
JOHN DAY DAM, RUFUS, OR
PURCHASER, SITE

R-120627
ORDER NUMBER

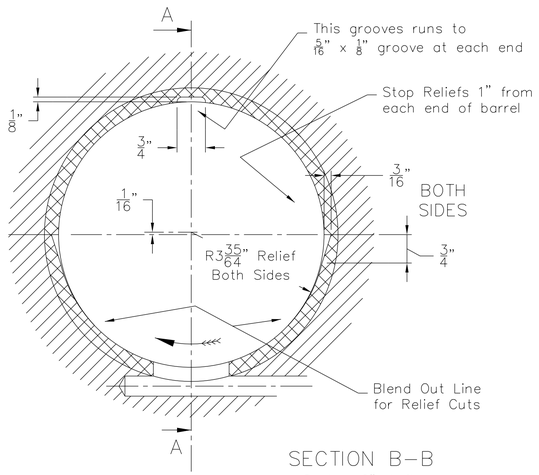

SECTION B–B
Scale– 6"=1 ft.

TOLERANCES; UNLESS OTHERWISE SPECIFIED
X.XXX= +/–.010"
X.XX= +/–.020"
X.X= +/–.030"
Frac.= +/–1/64"
Angle= +/– 1 Deg.
Break All Edges .005"/.010"
√ = 125 RMS

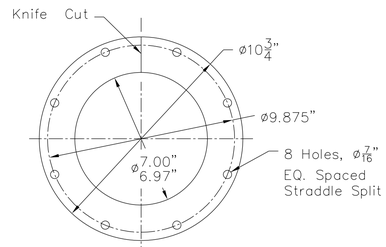

ITEM 9
Seal Rings–New
Scale– 3"=1 ft.

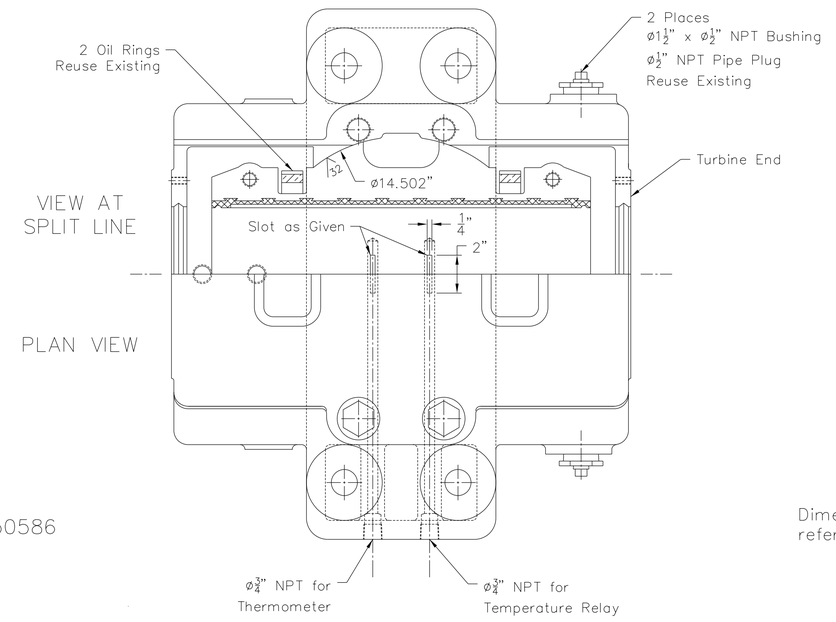

Bearing Housing and Barrel–Oultine of Refurb
1.) Map existing barrel
2.) Remove existing babbitt, Kolene salt bath, tin, and rebabbitt
–Babbitting to be accordance with 48 13 13.07 26
3.) UT/PT of babbitt bond
4.) Machine spherical radii on housing and barrel in prep for spray weld.
5.) Spray weld build spherical radii
6.) Check split lines for flatness and mating
–Split line joints shall not allow a 0.002" feeler gauge will not go thru at any place
7.) Skim mill bottom surface "A"
8.) Machine spherical radii to dimensions given with target clearance of 0.004"
9.) For finish machining of babbitt torque 3/4"–10 SHCS to 300 lb–ft Lubed
10.) Final P/T and dimensional inspection
11.) Paint in accordance with 09 07 02.00 26

SEE ORIGINAL LEFFEL DRAWING 50586
FOR ADDITIONAL DETAILS

Dimensions in [brackets]
reference existing dimensions

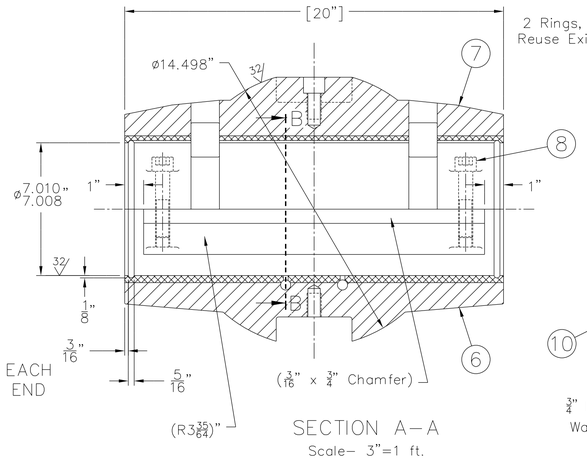

SECTION A–A
Scale– 3"=1 ft.

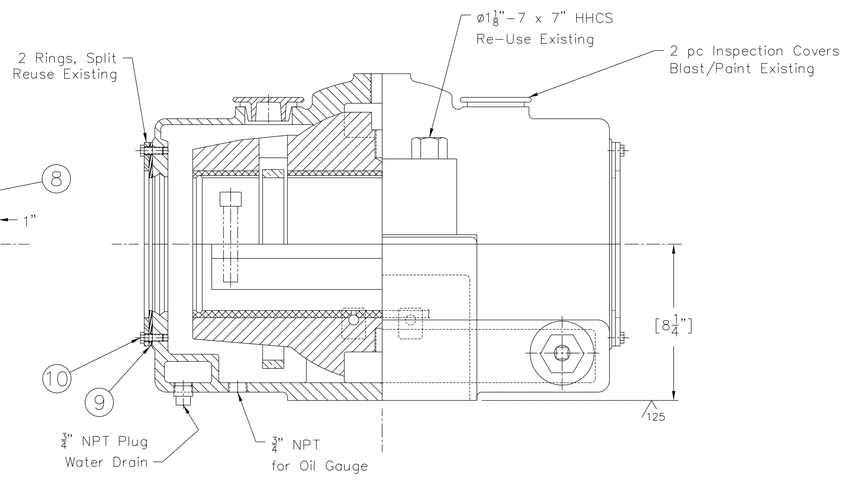

AS–CONSTRUCTED

QUANTITY	ITEM NO	PART NAME, TYPE	LB. EACH	REFERENCE	MATERIAL
16	10	ø5/16"–18 x 1" HHCS– NEW	–		Grade 5, Plated
2	9	Seal Rings–New	–		3/16" Leather Chrome (Mineral) Tanned
4	8	ø3/4"–10 x 3–1/2" SHCS–NEW	–		Alloy Steel ASTM A574
1	7	Bearing Barrel– Upper Half	150		Cast Iron ––
1	6	Bearing Barrel– Lower Half	175		Cast Iron ––
1	5	Bearing Barrel	(325)		––
1	4	Bearing Cap– Exist	125		Cast Iron ––
1	3	Bearing Base	450		Cast Iron ––
1	2	Bearing Housing	(575)		––
1	1	Outboard Bearing Assembly	[900]		––

CURRENT REV. A

REVISIONS
REV. A — DATE 09/12/12 — BY JRW — CHANGES –AS–CONSTRUCTED– NO CHANGES FROM REV –

Quality Service Since 1862

The James Leffel & Co.
Manufacturers of
HYDRAULIC TURBINES

USACE–PORTLAND
JOHN DAY DAM, RUFUS, OR
PURCHASER: SITE

R–120627
ORDER NUMBER

DATE 08/01/11 | DRAWN BY JR Ward | CHECKED BY
SCALE AS NOTED | UNIT NUMBER W–3036 | APPROVED BY
CONTRACT NO: W9127N–10–C–0029
CLIN 0034AD | NEXT ASSEMBLY 54100

DRAWING TITLE
TURBINE OUTBOARD BEARING REBABBITT REFURBISHMENT

DRAWING NUMBER
54113

SHEET SIZE ANSI–D | SHEET NO 1 OF 1

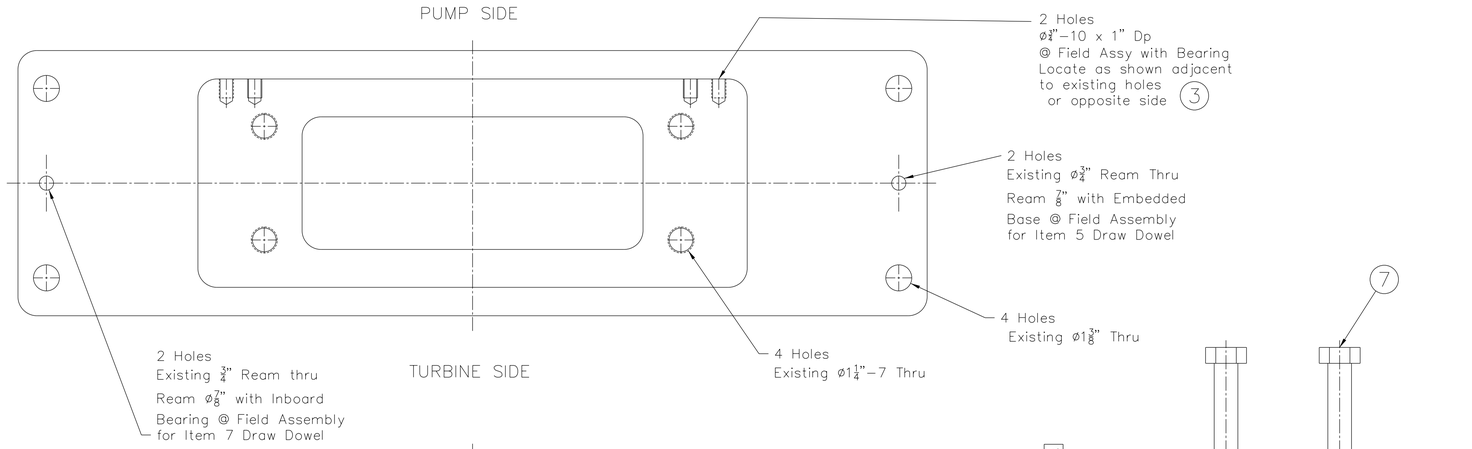

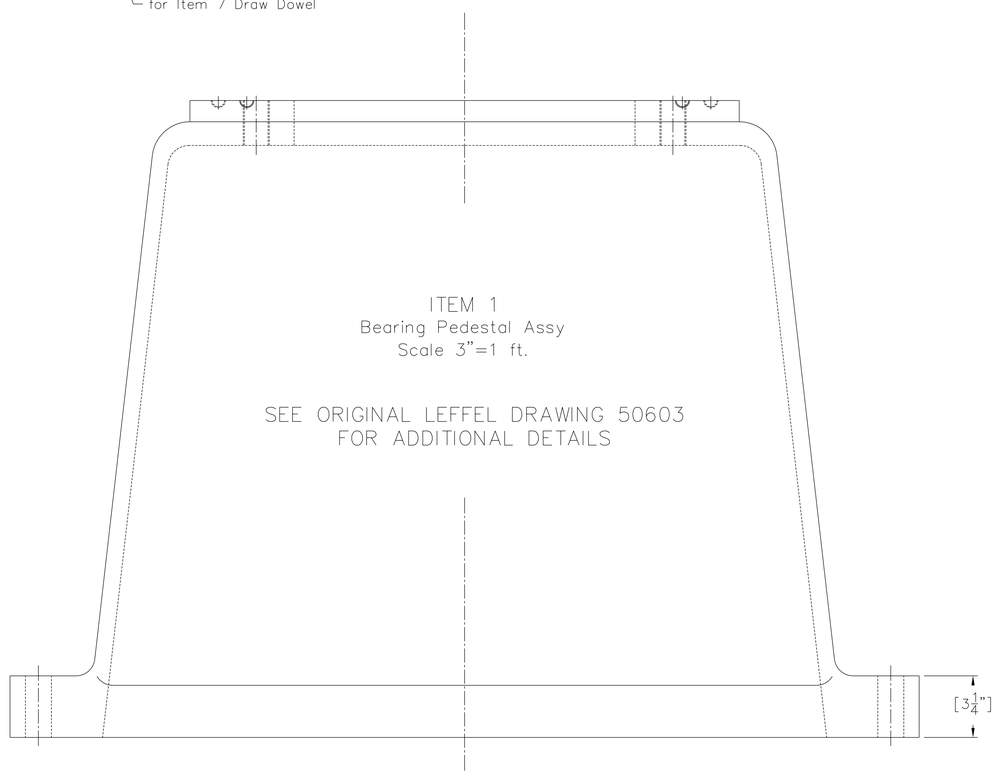

ITEM 1
Bearing Pedestal Assy
Scale 3"=1 ft.

SEE ORIGINAL LEFFEL DRAWING 50603
FOR ADDITIONAL DETAILS

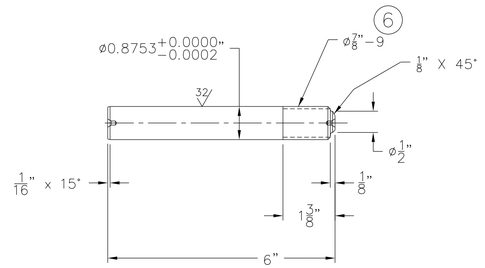

ITEM 5– DRAW DOWEL
Scale–6"=1 ft

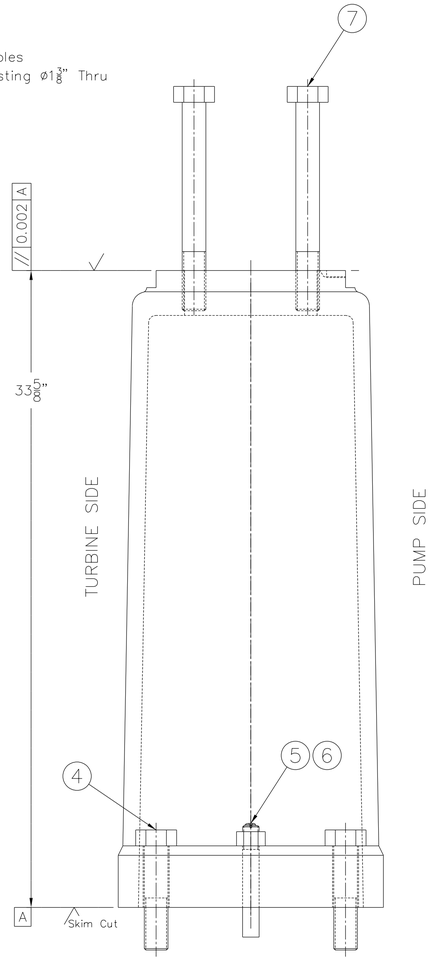

AS–CONSTRUCTED

Outline of Work
1.) Slim cut surface "A"
2.) Machine top surface true to "A" and given dimension.

QUANTITY	ITEM NO.	PART NAME, TYPE	LB. EACH	REFERENCE	MATERIAL
4	7	Ø1–1/4"–7 x 11" HHCS–NEW	–		Grade 5, Plain –
2	6	Ø7/8"–9 Hex Nut–NEW	–		Grade 5, Plain –
2	5	Ø7/8" x 6" Draw Dwls per Detail–NEW	–		4140–HT, RC 28–32 –
4	4	Ø1–1/4"–7 x 5–1/2" HHCS	–		Grade 5, Plain –
2	3	Ø3/4"–10 x 1–1/4" HHCS	–		Grade 5, Zinc Plate –
1	2	Bearing Pedestal–Exisitng	970		Cast Iron CL 30 –
1	1	Bearing Pedestal Assy	(1,000)		– –

REVISION: CURRENT REV. A

REV.	DATE	BY	CHANGES
A	09/12/12	JRW	–AS–CONSTRUCTED– NO CHANGES FROM REV –

USACE–PORTLAND
JOHN DAY DAM, RUFUS, OR
PURCHASER: SITE

R–120627
ORDER NUMBER

DATE: 08/01/11 | DRAWN BY: JR Ward | CHECKED BY:
SCALE: AS NOTED | UNIT NUMBER: W–3036 | APPROVED BY:
CONTRACT NO: W9127N–10–C–0029

DRAWING TITLE
BEARING PEDESTAL
TURBINE OUTBOARD BEARING
REFURBISHMENT

Quality Service Since 1862

The James Leffel & Co.
Manufacturers of
HYDRAULIC TURBINES

CLIN: 0034AD | NEXT ASSEMBLY: 54100

DRAWING NUMBER: 54114

SHEET SIZE: ANSI–D | SHEET NO OF: 1 1

TOLERANCES; UNLESS
OTHERWISE SPECIFIED
X.XXX= +/–.010"
X.XX= +/–.020"
X.X= +/–.030"
Frac.= +/–1/64"
Angle= +/– 1 Deg.
Break All Edges .005"/.010"
√ = 125 RMS

2.) Pedestal supplied cleaned and finish painted by the government
After shop work, clean and touch–up paint
1.) Dimensions in [brackets] reference existing dimensions
Notes:

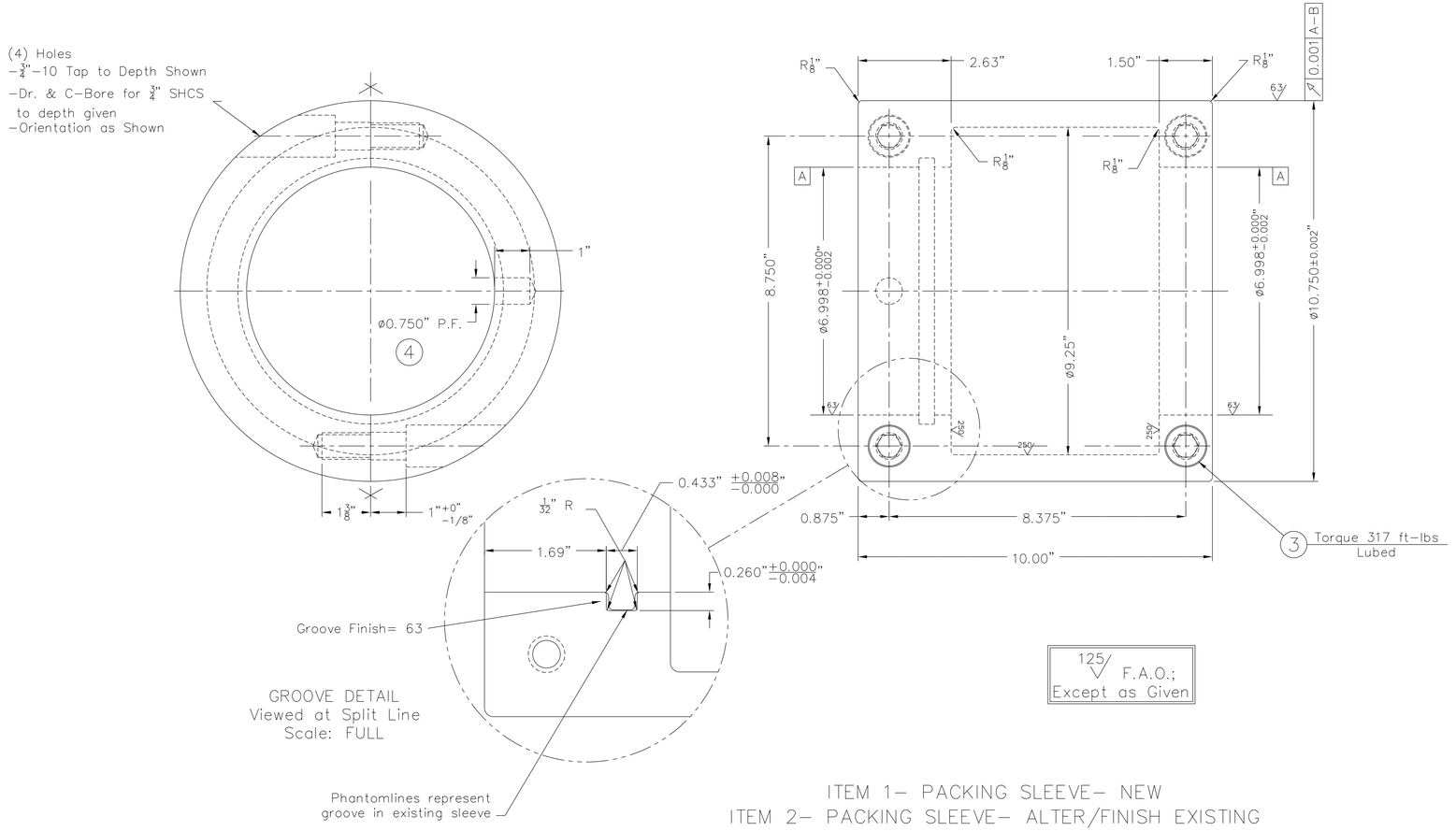

ITEM 1– PACKING SLEEVE– NEW
ITEM 2– PACKING SLEEVE– ALTER/FINISH EXISTING
Scale– 6"=1 ft.

AS–CONSTRUCTED

QUANTITY	ITEM NO.	PART NAME, TYPE	LB. EACH	REFERENCE	MATERIAL
2	4	ø3/4" x 2" Dowel	–		Carbon Steel– RC 58–62 –
8	3	ø3/4"-10 x 2-1/4" SHCS	–		Alloy Steel –
1	2	Shaft Sleeve-FINISH EXISTING	150	X50785	Centrifugal Cast Stainless ASTM A743, Gr. CA-15
1	1	Shaft Sleeve-NEW	150	–	Centrifugal Cast Stainless ASTM A747, 17-4 (1150)

REVISIONS: A CURRENT REV.

REV.	DATE	BY	CHANGES
A	09/12/12	JRW	–AS-CONSTRUCTED– NO CHANGES FROM REV –

Quality Service Since 1862

The James Leffel & Co.
Manufacturers of
HYDRAULIC TURBINES

DATE	DRAWN BY	CHECKED BY
11/06/10	JR Ward	A DYNGE
SCALE	UNIT NUMBER	APPROVED BY
AS NOTED	W-3036	

CONTRACT NO: W9127N-10-C-0029

CLIN: 0017 | NEXT ASSEMBLY: 54105

DRAWING TITLE: TURBINE SHAFT SLEEVE ONE NEW and ONE FINISH EXISTING

DRAWING NUMBER: 54117

SHEET SIZE: ANSI-D | SHEET NO OF: 1 1

PURCHASER, SITE: USACE-PORTLAND JOHN DAY DAM, RUFUS, OR

ORDER NUMBER: R-120627

TOLERANCES; UNLESS OTHERWISE SPECIFIED
X.XXX= +/-.010"
X.XX= +/-.020"
X.X= +/-.030"
Frac.= +/-1/64"
Angle= +/- 1 Deg.
Break All Edges .005"/.010"
√ = 125 RMS

2.) Sleeve OD's to be finished assembled to a mandrel of ø7.000"±0.001" or assembled on new turbine shaft, Dwg: 54105
In either case, lube and torque the SHCS to 317 ft–lbs for this work
1.) Item 1 Sleeve to be manufactured new per this drawing.
Item 2 Sleeve is an existing new sleeve supplied by government, drawing X50785.
This sleeve to have its o–ring groove altered and finished on its OD per this drawing.
NOTES:

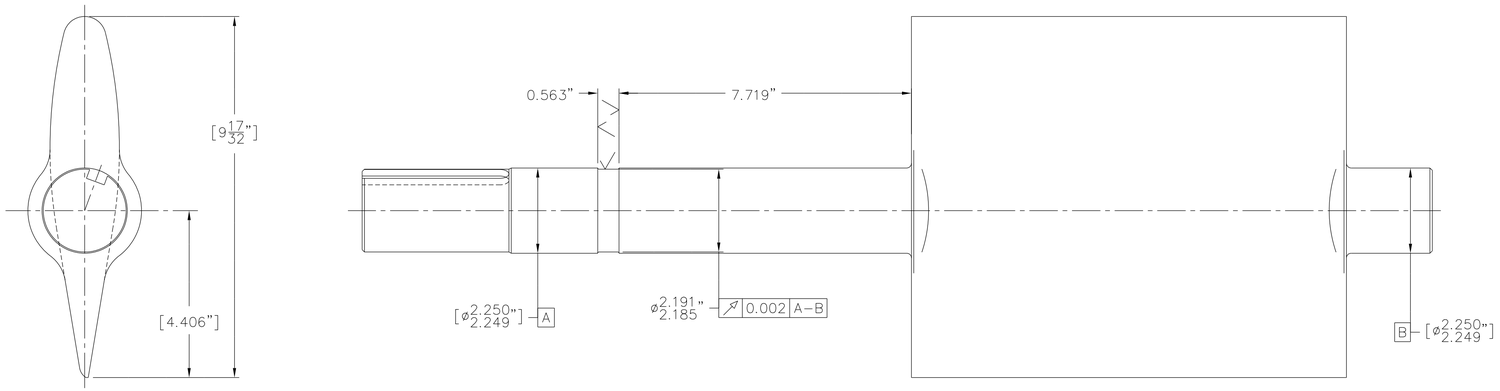

ITEM 1– WICKET GATE
ALTER
Scale– 6"=1 ft.

Government supplied
Wicket Gates
Drawing: 53391

Alter by machining
groove as given

AS–CONSTRUCTED

TOLERANCES; UNLESS
OTHERWISE SPECIFIED
X.XXX= +/–.010"
X.XX= +/–.020"
X.X= +/–.030"
Frac.= +/–1/64"
Angle= +/– 1 Deg.
Break All Edges .005"/.010"
√ = 125 RMS

QUANTITY	ITEM NO.	PART NAME, TYPE	LB. EACH	REFERENCE	MATERIAL
18	1	Wicket Gate-Alter	–	GSM	Cast Chromium Stainless ASTM A 743, Gr. CA6NM

REVISIONS — CURRENT REV. A

REV.	DATE	BY	CHANGES
A	09/12/12	JRW	-AS-CONSTRUCTED- NO CHANGES FROM REV -

Quality Service Since 1862

DATE	DRAWN BY	CHECKED BY
11/30/10	JR Ward	A DYNGE
SCALE: AS NOTED	UNIT NUMBER: W-3036	APPROVED BY:

The James Leffel & Co.
Manufacturers of
HYDRAULIC TURBINES

USACE-PORTLAND
JOHN DAY DAM, RUFUS, OR
PURCHASER, SITE

R-120627
ORDER NUMBER

CONTRACT NO: W9127N-10-C-0029

CLIN: 0011/0016

NEXT ASSEMBLY: 54100

DRAWING TITLE:
GATE OPERATING LINKAGE
WICKET GATE
ALTER

DRAWING NUMBER: 54118

SHEET SIZE: ANSI-D

SHEET NO OF: 1 1

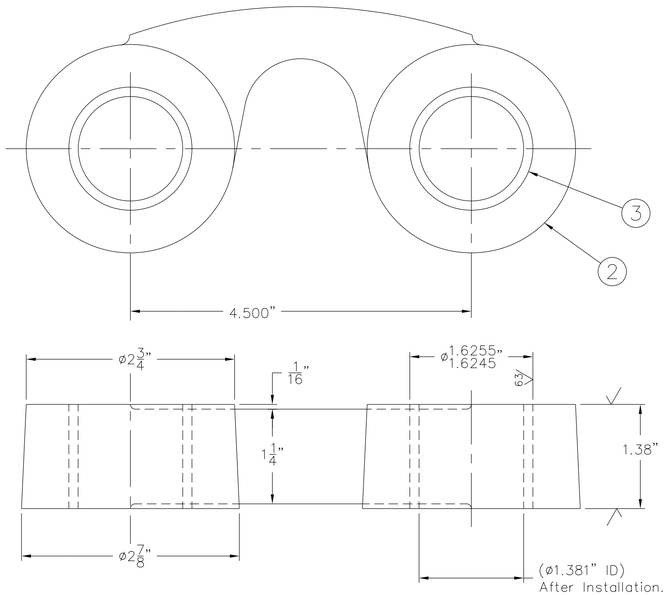

ITEM 1
NEW GATE LINK ASSEMBLY
SPARES per CLIN 0018AA
Scale– FULL

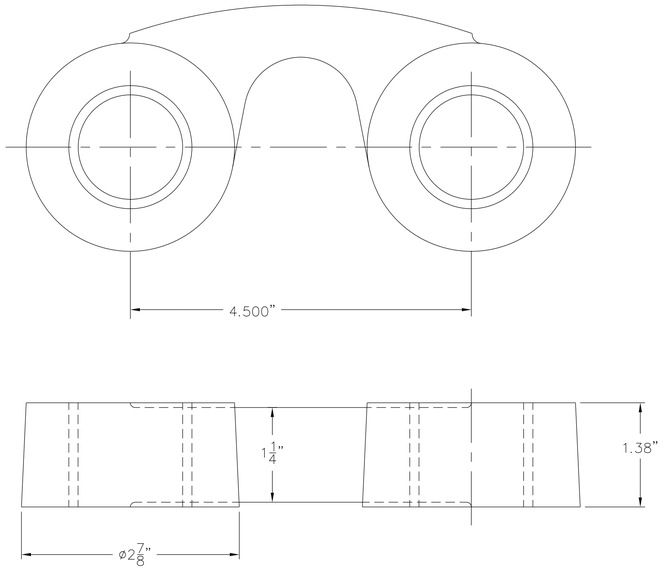

ITEM 4
SUPPLIED GATE LINK ASSEMBLY
Scale– FULL

Government supplied Gate Link assemblies.
–Protect Bushings
–Blast to remove existing paint
–Paint per 09 97 02.00 26

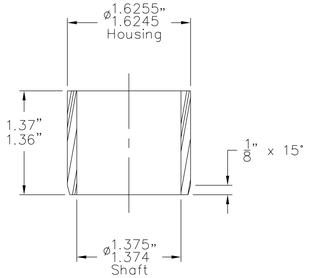

ITEM 3
DESIGN DATA
GATE LINK BUSHING
For Spare Links
Scale– FULL

AS–CONSTRUCTED

QUANTITY	ITEM NO.	PART NAME, TYPE	L.B. EACH	REFERENCE	MATERIAL
18	4	Gate Link Assembly- SUPPLIED	5	–	Cast Iron CL 30 Non–Lube Bushing
32	3	Bushing	–	–	Composite, Non–Lube Orkot: GBND002756TXMM
16	2	Gate Link	5	Patt 7699	Cast Iron CL30
16	1	Gate Link Assembly- NEW	5	–	–

REVISIONS

REV.	DATE	BY	CHANGES
A	02/18/11	JRW	–ITEM 3 WAS 2341–AIHB
B	09/12/12	JRW	–AS–CONSTRUCTED– NO CHANGES FROM REV A

B CURRENT REV

USACE–PORTLAND
JOHN DAY DAM, RUFUS, OR

PURCHASER, SITE

ORDER NUMBER R–120627

DATE	DRAWN BY	CHECKED BY
02/04/11	JR Ward	
SCALE	UNIT NUMBER	APPROVED BY
AS NOTED	W–3036	

CONTRACT NO: W9127N–10–C–0029

DRAWING TITLE
SPARE GATE LINKS and
REPAINT SUPPLIED LINKS
NEW and REFURBISHED

Quality Service Since 1862

The James Leffel & Co.
Manufacturers of
HYDRAULIC TURBINES

CLIN 0016 0018AA
NEXT ASSEMBLY 54100
DRAWING NUMBER 54120
SHEET SIZE ANSI–D
SHEET NO 1 OF 1

TOLERANCES; UNLESS
OTHERWISE SPECIFIED
X.XXX= +/–.010"
X.XX= +/–.020"
X.X= +/–.030"
Frac.= +/–1/64"
Angle= +/– 1 Deg.
Break All Edges .005"/.010"
√= 125 RMS

2.) Perpare and paint per 09 97 02.00 26
1.) New spare links same as supplied links
NOTES:

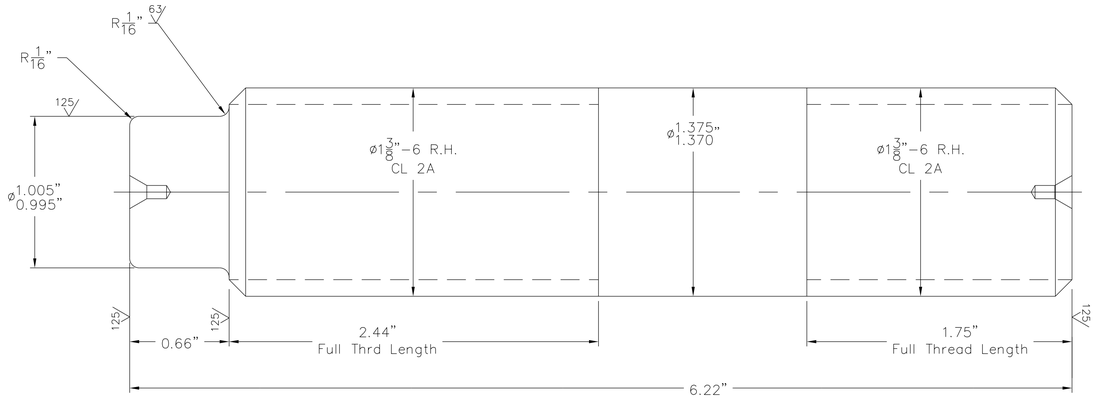

ITEM 1
Turbine Stud
Manufacturing Detail

Scale– 24"=1 ft.

MANUFACTURING OUTLINE

1.) One (1) blank from each lot of material is to be turned down to 1.38", then be tension tested IAW ASTM A193

2.) The finished studs to be magnetic particle (M/T) inspected per standard practice ASTM E1444. No cracks allowed.

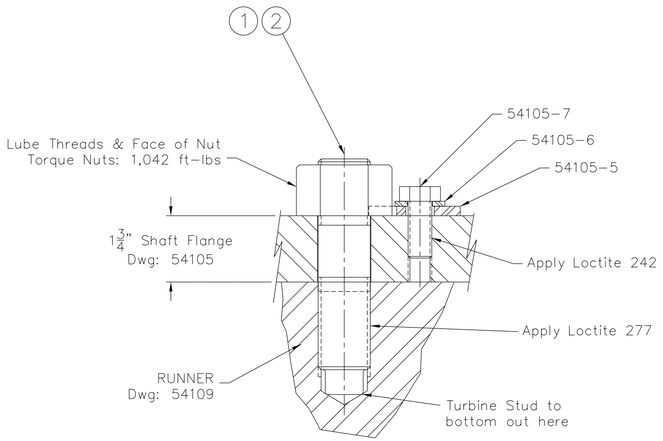

REFERENCE ASSEMBLY DETAIL
TURBINE SHAFT/RUNNER
Scale– 6"=1 ft.

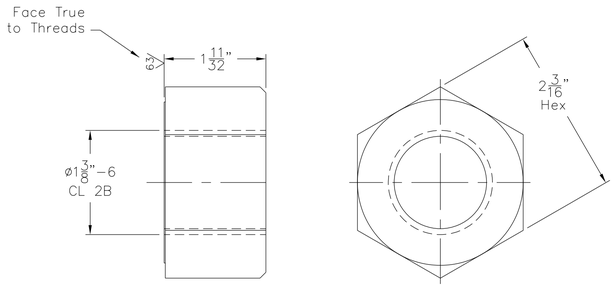

ITEM 2
Turbine Stud Hext Nuts
Alter Purchase
Scale– 12"=1 ft.

AS SUPPLIED BY GOVERNMENT
(JLC DWG: X50576)

AS–CONSTRUCTED

QUANTITY	ITEM NO.	PART NAME, TYPE	LB. EACH	REFERENCE	MATERIAL
8	2	1-3/8"-6 Hvy Hex Nuts	–	GSM	Alloy Steel ASTM A194, Gr. 2H
8	1	Turbine Studs- ø1-3/8"-6 x 6-7/32"	2.5	NEW	Alloy Steel ASTM A193, Gr. B7

REVISIONS

REV.	DATE	BY	CHANGES
A	09/12/12	JRW	-AS-CONSTRUCTED- NO CHANGES FROM REV -

CURRENT REV.: A

Quality Service Since 1862

The James Leffel & Co.
Manufacturers of
HYDRAULIC TURBINES

DATE	DRAWN BY	CHECKED BY
09/06/11	JR Ward	

SCALE	UNIT NUMBER	APPROVED BY
AS NOTED	W-3036	

CONTRACT NO: W9127N-10-C-0029

DRAWING TITLE: RUNNER STUDS (NEW) and NUTS

CLIN	NEXT ASSEMBLY
0005	54105/54100

DRAWING NUMBER: 54218

SHEET SIZE	SHEET NO	OF
ANSI-D	1	1

USACE-PORTLAND
JOHN DAY DAM, RUFUS, OR
PURCHASER, SITE

R-120627
ORDER NUMBER

TOLERANCES; UNLESS OTHERWISE SPECIFIED
X.XXX= +/-.010"
X.XX= +/-.020"
X.X= +/-.030"
Frac.= +/-1/64"
Angle= +/- 1 Deg.
Break All Edges .005"/.010"
√ = 125 RMS

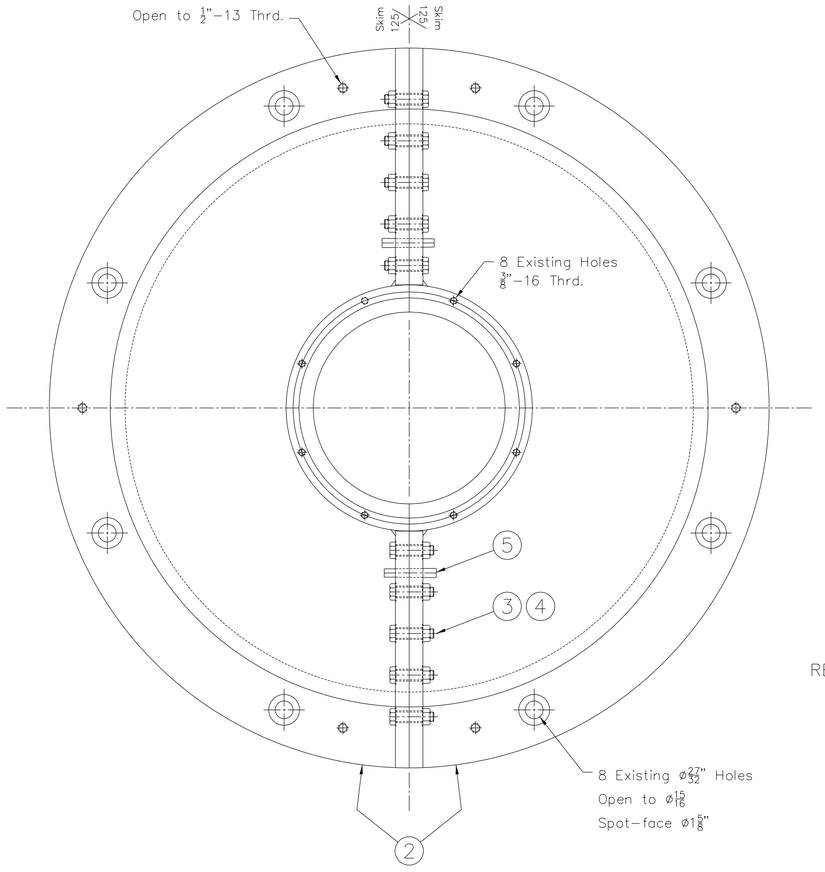

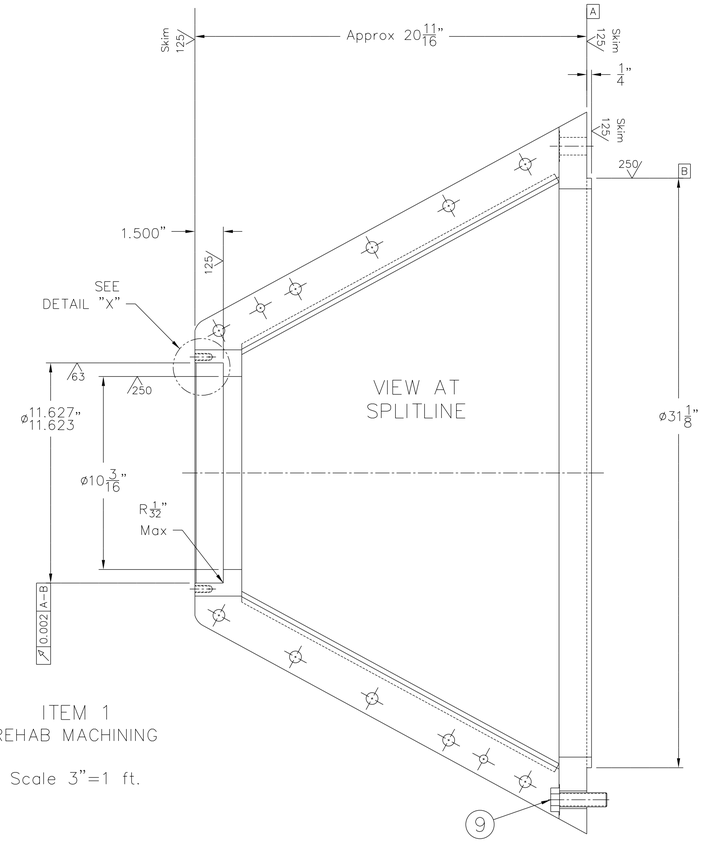

ITEM 1
REHAB MACHINING

Scale 3"=1 ft.

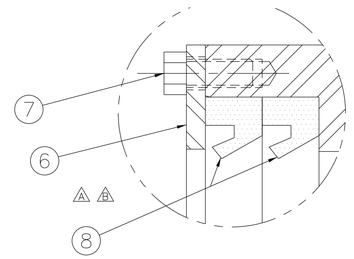

DETAIL "X"
FULL SCALE

AS–CONSTRUCTED

QUANTITY	ITEM NO.	PART NAME, TYPE	LB. EACH	REFERENCE	MATERIAL
8	9	ø3/4"-10 x 2-1/2" Hvy Hex Bolt	–		18-8 SS, Gr B8
2	8	Split Seal, 11.625" x 10.000" x 0.750	–		NBR Garlock: 25003-3993
8	7	ø3/8"-16 x 3/4" HHCS	–		18-8 SS
1	6	Retainer Plate, Split- REUSE EXISTING	–		Carbon Steel
2	5	#8 x 2-3/4" Taper Pin	–		Steel
10	4	ø1/2"-13 Hvy Hex Nut	–		18-8 SS
10	3	ø1/2"-13 x 2" HHCS	–		18-8 SS Gr B8
2	2	Diffuser Cone Halves	200		Carbon Steel
1	1	Diffuser Extension Cone Assembly	(400)		

△ OUTLINE OF MACHINE WORK:
1.) Align best case to splitlines and take skim cut.
2.) Bolt halves together with bottom surface and upper bore aligned best case.
3.) Machine as given.
4.) Paint System 21–A–Z, Haze Gray Top Coats

TOLERANCES; UNLESS OTHERWISE SPECIFIED
X.XXX= +/–.010"
X.XX= +/–.020"
X.X= +/–.030"
Frac.= +/–1/64"
Angle= +/– 1 Deg.
Break All Edges .005"/.010"
√ = 125 RMS

CURRENT REV.

REVISIONS	REV.	DATE	BY	CHANGES
	A	11/04/11	JRW	-ADDED SECOUND SEAL RING; REUSE EXISTING RETAINER
	B	12/04/11	JRW	-CORRECTED INSTALLED DIRECTION OF SEAL SEAL RINGS
	C	09/12/12	JRW	-AS-CONSTRUCTED- NO CHANGES FROM REV B

Quality Service Since 1862

USACE-PORTLAND
JOHN DAY DAM, RUFUS, OR
PURCHASER, SITE

R-120627
ORDER NUMBER

DATE	DRAWN BY	CHECKED BY
10/02/11	JR Ward	
SCALE	UNIT NUMBER	APPROVED BY
AS NOTED	W-3036	

CONTRACT NO
W9127N-10-C-0029

DRAWING TITLE
EXTENSION CONE
DIFFUSER
REHAB

The James Leffel & Co.
Manufacturers of
HYDRAULIC TURBINES

CLIN	NEXT ASSEMBLY
0143	SL 11589

DRAWING NUMBER
54122

SHEET SIZE	SHEET NO	OF
ANSI-D	1	1

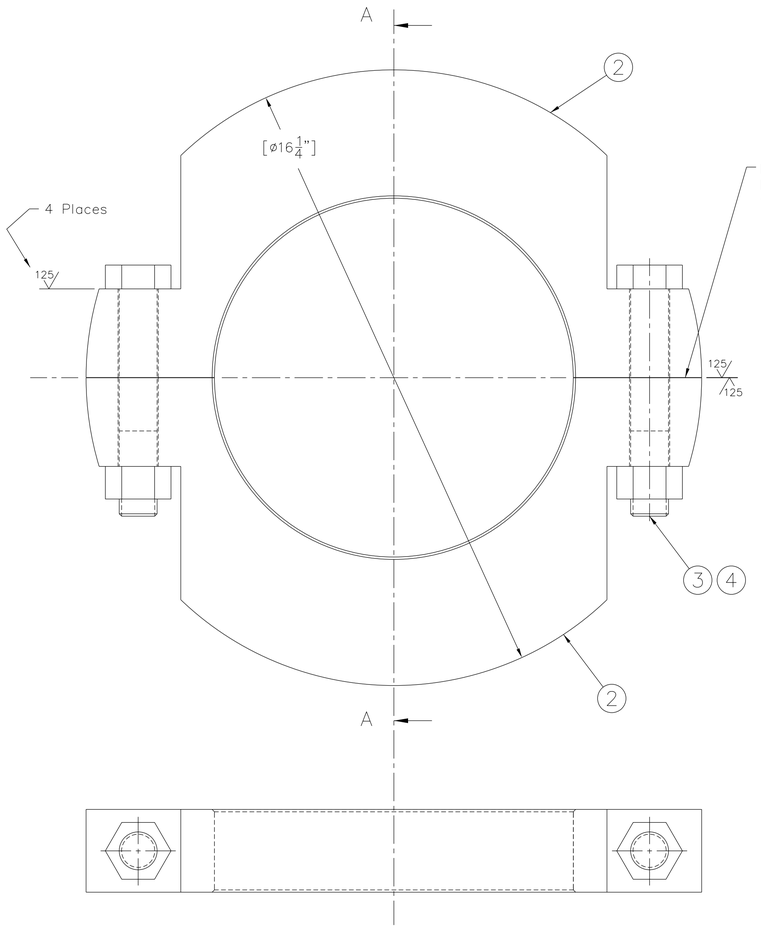

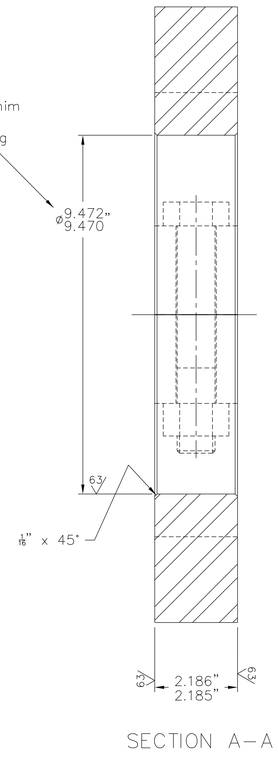

SECTION A–A

ITEM 1
Refurb Machining
Scale 6"=1 ft

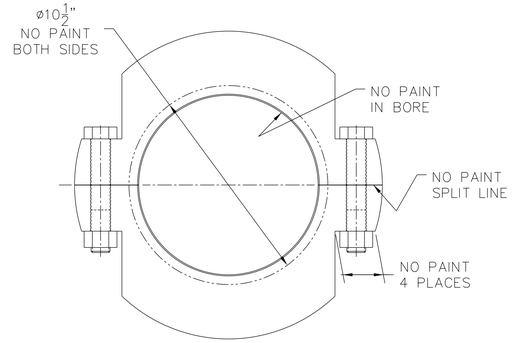

ITEM 1
PAINTING
Scale– 3"=1 ft

Paint Haze Gray per
09 97 02.00 26

AS–CONSTRUCTED

TOLERANCES; UNLESS
OTHERWISE SPECIFIED
X.XXX= +/–.010"
X.XX= +/–.020"
X.X= +/–.030"
Frac.= +/–1/64"
Angle= +/– 1 Deg.
Break All Edges .005"/.010"
√ = 125 RMS

QUANTITY	ITEM NO.	PART NAME, TYPE	LB. EACH	REFERENCE	MATERIAL
2	4	ø1"-8 Hex Nut	70		Grade 8, Zinc PL (MCMaster: 94895A038)
2	3	ø1"-8 x 6" HHCS	–		Grade 8, Zinc PL (McMaster: 91257A969)
2	2	Propeller Support Ring Halves	70		Carbon Steel –
1	1	Propeller Support Ring Assembly	(140)		Carbon Steel –

CURRENT REV.

REVISIONS

REV.	DATE	BY	CHANGES
A	09/12/12	JRW	-AS-CONSTRUCTED- NO CHANGES FROM REV -

Quality Service Since 1862

DATE: 09/20/11
DRAWN BY: JR Ward
CHECKED BY:
SCALE: AS NOTED
UNIT NUMBER: W-3036
APPROVED BY:

The James Leffel & Co.
Manufacturers of
HYDRAULIC TURBINES

USACE-PORTLAND
JOHN DAY DAM, RUFUS, OR
PURCHASER, SITE

CONTRACT NO: W9127N-10-C-0029

CLIN: 0142
NEXT ASSEMBLY: –

DRAWING TITLE
PROPELLER SUPPORT RING
REFURBISHMENT

DRAWING NUMBER
54124

R-120627
ORDER NUMBER

SHEET SIZE: ANSI-D
SHEET NO OF: 1 1

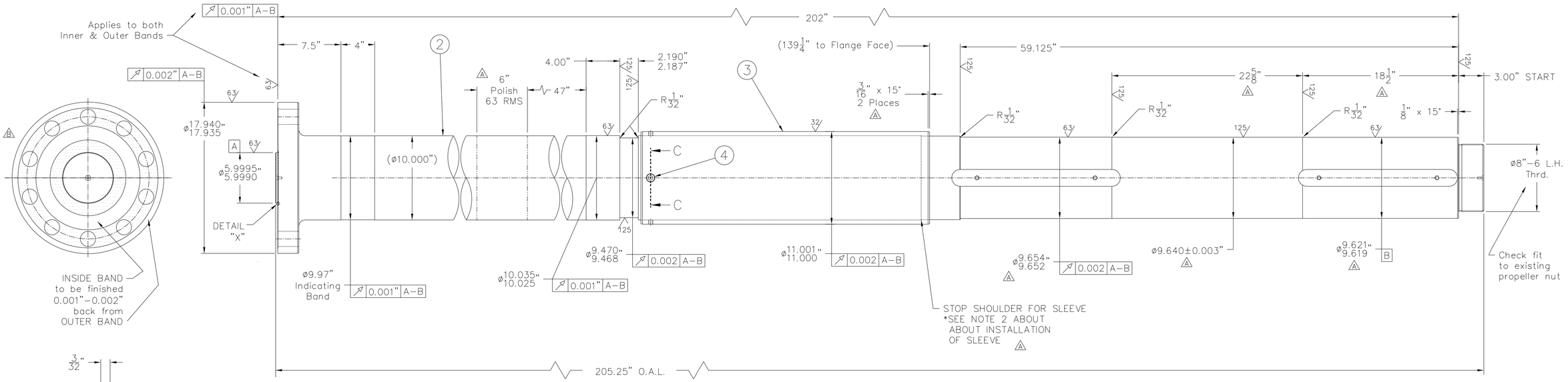

SEE SHEET 2 for ADDITIONAL DETAILS and FINISHED DIMENSIONS

ITEM 1
PUMP SHAFT w/SLEEVE
FINAL–MACHINING
Scale: 2"=1 ft.

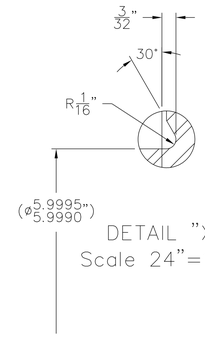

DETAIL "X"
Scale 24"=1 ft.

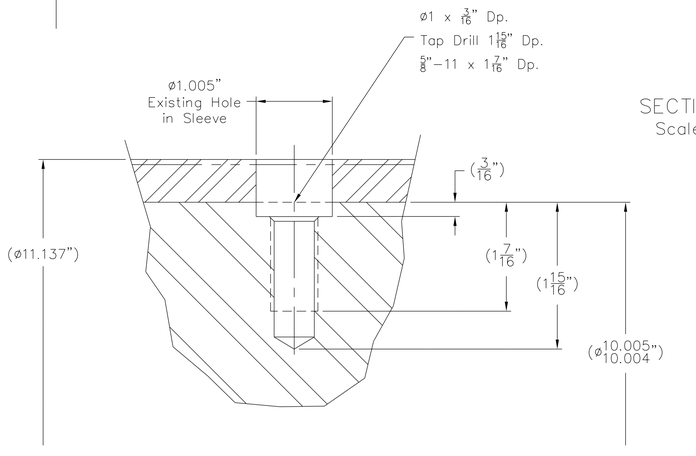

SECTION C–C
Scale– FULL

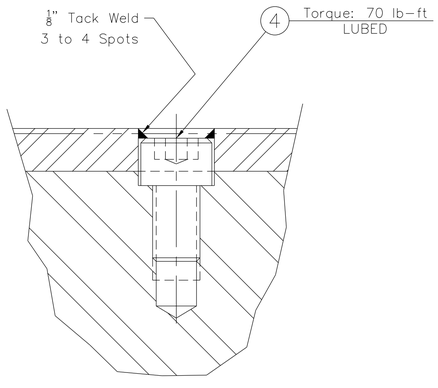

ITEMS 5 & 6
Shaft Keys
Scale 3"=1 ft.

QUANTITY	ITEM NO.	PART NAME, TYPE	LB. EACH	REFERENCE	MATERIAL
4	7	ø1/2"-13 x 2-1/4" SHCS	–		Alloy Steel– ASTM A574 McMaster: 91251A721
2	6	2" SQ x 16.88" Lg. Key	19		Carbon Steel Oversize
2	5	2" SQ x 18" Lg. Key	20		Carbon Steel Oversize
1	4	ø5/8"-11 x 1" SHCS	–		Stainless 18–8
1	3	Shaft Sleeve– GSM	150		Stainless 400 Series
1	2	Pump Shaft– NEW	4,500		Carbon Steel Forging ASTM A6689 CL D
1	1	Pump Shaft/Sleeve Assembly	(4,650)		– –

AS–CONSTRUCTED

CURRENT REV. C

REVISIONS
A 09/30/11 JRW –CORRECTED NOTES PER TRANS 48 13 13.12 26–10
–FINALIZED DIAMETERS BASED UPON PROPELLER BORES
–18–1/2" WAS 18", 22–5/8" WAS 23–1/8"
–ADDED 3/16" x 15° LEADS & POLISH AREA
–COORECT KEY WIDTH TO MEET ANSI B17.1, CL 2 FIT
B 10/17/11 JRW –CORRECTED NUMBER OF FLANGE HOLES SHOWN TO 10
C 09/12/12 JRW –AS–CONSTRUCTED– NO CHANGES FROM REV B

Quality Service Since 1862

DATE 06/13/11 | DRAWN BY JR Ward | CHECKED BY
SCALE AS NOTED | UNIT NUMBER W–3036 | APPROVED BY

The James Leffel & Co.
Manufacturers of
HYDRAULIC TURBINES

PURCHASER: USACE–PORTLAND JOHN DAY DAM, RUFUS, OR
ORDER NUMBER: R–120627
CONTRACT NO: W9127N–10–C–0029
CLIN 0105 | NEXT ASSEMBLY WORTHINGTON SL11589
DRAWING TITLE: PUMP SHAFT WITH SLEEVE FORGE and MACHINE
DRAWING NUMBER 54192
SHEET SIZE ANSI–D | SHEET NO 1 OF 3

TOLERANCES; UNLESS OTHERWISE SPECIFIED
X.XXX= +/–.010"
X.XX= +/–.020"
X.X= +/–.030"
Frac.= +/–1/64"
Angle= +/– 1 Deg.
Break All Edges .005"/.010"
√ = 125 RMS

NOTES:
1.) See Sheet 2 for further machining and details. See Sheet 3 for forging.
2.) SLEEVE INSTALL
Item 3 Sleeve to be heated to achieve a clearance of 0.020" to shaft. AVOID DIRECT FLAME ONTO SLEEVE.
–The sleeve is designed to stop against the shoulder between the 9.935" and 10.005" diameters (See Sheet 2), however care needs taken in pushing sleeve against shoulder, as ledge is shallow.
–Also here, hold sleeve against ledge until cool. Also, be sure sleeve is oriented in correct direct (See Sheet 2)
–Spot–face, drill, tap, and install Item 4, ø5/8" SHCS per Section "C–C".
3.) Shaft to be 100 P/T'd after final machining
4.) Shaft to be painted per drawing 54220.

This pre-machining finishes the overall length, sleeve fit area, keyways, holes, flange face reliefs, back side of flange, 10.00" diameter, and relief where threads meets shoulder

EXCEPT AS GIVEN;
F.A.O. 250

ITEM 2
PUMP SHAFT
PRE-MACHINING
Scale: 2"=1 ft.

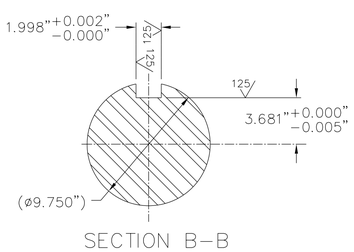

SECTION B-B

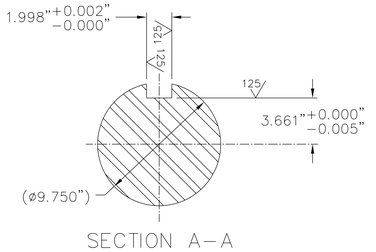

SECTION A-A

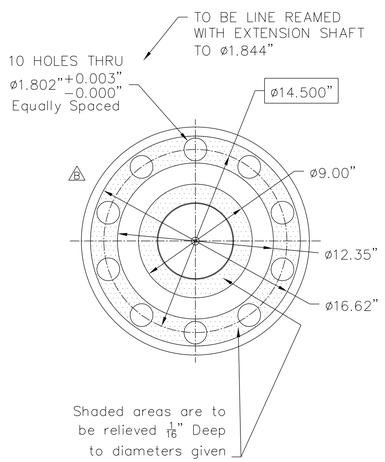

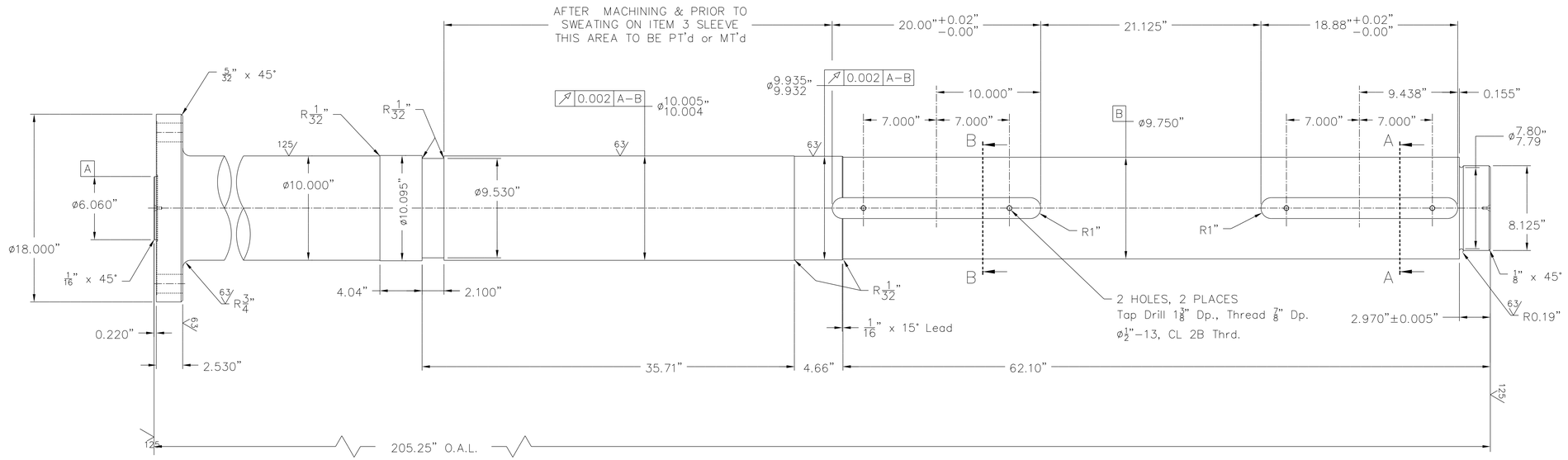

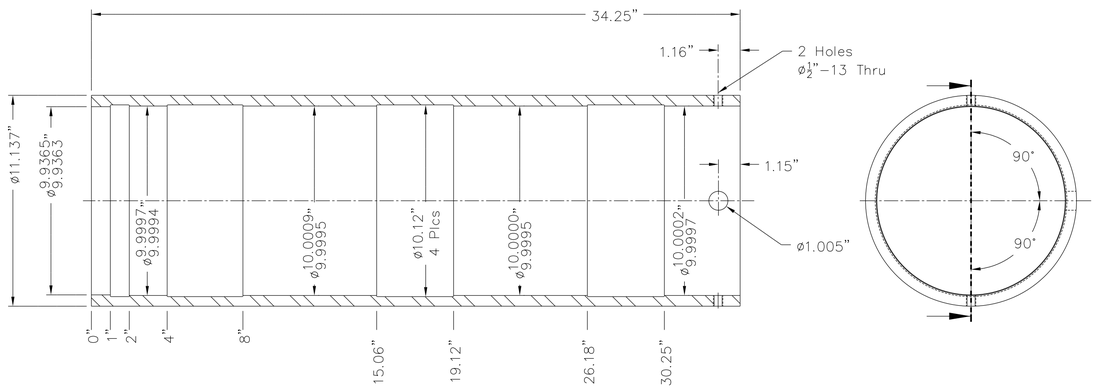

ITEM 3
GOVERNMENT SUPPLIED SLEEVE
AS SUPPLIED DIMENSIONS
Scale: 3"=1 ft.

DIRECTION ONTO SHAFT

AS-CONSTRUCTED

TOLERANCES; UNLESS OTHERWISE SPECIFIED
X.XXX= +/-.010"
X.XX= +/-.020"
X.X= +/-.030"
Frac.= +/-1/64"
Angle= +/- 1 Deg.
Break All Edges .005"/.010"
√ = 125 RMS

** SEE SHEET 1 FOR PARTS/MATERIAL LIST **

QUANTITY	ITEM NO.	PART NAME, TYPE	LB. EACH	REFERENCE	MATERIAL

REVISIONS	CURRENT REV.	REV.	DATE	BY	CHANGES
		A	09/30/11	JRW	SEE SHEET 1
		B	10/17/11	JRW	SEE SHEET 1
		C	09/12/12	JRW	SEE SHEET 1

Quality Service Since 1862

DATE	DRAWN BY	CHECKED BY
06/13/11	JR Ward	

SCALE	UNIT NUMBER	APPROVED BY
AS NOTED	W-3036	

The James Leffel & Co.
Manufacturers of
HYDRAULIC TURBINES

PURCHASER, SITE	CONTRACT NO.	CLIN	NEXT ASSEMBLY
USACE-PORTLAND JOHN DAY DAM, RUFUS, OR	W9127N-10-C-0029	0105	SHEET 1

ORDER NUMBER	DRAWING TITLE	DRAWING NUMBER
R-120627	PUMP SHAFT WITH SLEEVE FORGE and MACHINE	54192

SHEET SIZE	SHEET NO.	OF
ANSI-D	2	3

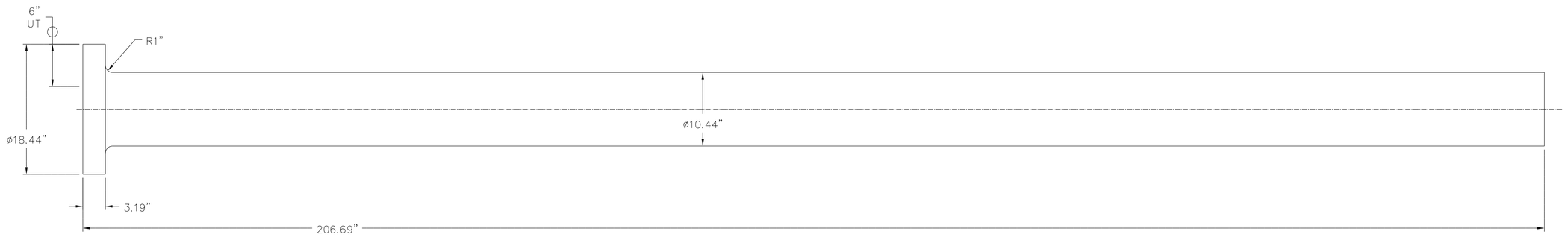

- All dimensions tolerance= $+\frac{1}{16}"/-0"$
- Shaft to be made according to ASTM A668, Class D
- Dimensions allow $\frac{7}{32}"$ stock per surface for finishing
- Test specimens per ASTM A668
- NDT requirements
  - 100 MT
  - UT in the flange area as shown

ITEM 1
FORGING & ROUGH TURNED DETAIL

Scale $1\frac{1}{2}"=1$ ft.

Rough Turned Weight: 5,225 lbs

AS-CONSTRUCTED

** SEE SHEET 1 FOR PARTS/MATERIAL LIST **

TOLERANCES; UNLESS
OTHERWISE SPECIFIED
X.XXX= +/-.010"
X.XX= +/-.020"
X.X= +/-.030"
Frac.= +/-1/64"
Angle= +/- 1 Deg.
Break All Edges .005"/.010"
√ = 125 RMS

QUANTITY	ITEM NO.	PART NAME, TYPE	L.B. EACH	REFERENCE	MATERIAL

CURRENT REV. C

REVISIONS

REV.	DATE	BY	CHANGES
A	09/30/11	JRW	SEE SHEET 1
B	10/17/11	JRW	SEE SHEET 1
C	09/12/12	JRW	SEE SHEET 1

Quality Service Since 1862

DATE	DRAWN BY	CHECKED BY
03/03/11	JR Ward	

SCALE	UNIT NUMBER	APPROVED BY
AS NOTED	W-3036	

The James Leffel & Co.
Manufacturers of
HYDRAULIC TURBINES

CONTRACT NO. W9127N-10-C-0029

DRAWING TITLE
PUMP SHAFT
WITH SLEEVE
FORGE and MACHINE

CLIN	NEXT ASSEMBLY
105	Sheet 2

DRAWING NUMBER 54192

SHEET SIZE	SHEET NO. OF
ANSI-D	3 3

USACE-PORTLAND
JOHN DAY DAM, RUFUS, OR
PURCHASER, SITE

R-120627
ORDER NUMBER

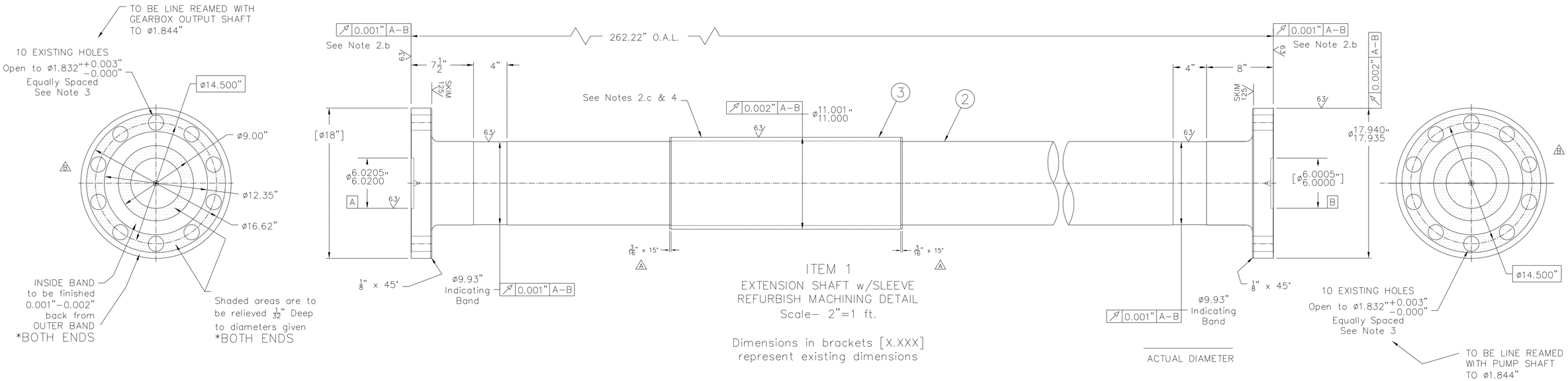

ITEM 1
EXTENSION SHAFT w/SLEEVE
REFURBISH MACHINING DETAIL
Scale− 2"=1 ft.

Dimensions in brackets [X.XXX] represent existing dimensions

OUTLINE OF WORK:

1.) Weld sleeve to shaft per Weld Detail
2.) Machine shaft complete per Final Machining Detail.
   a.) Work to be true to previously machined diameter "A" and existing diameter "B"
   b.) Flange faces are to be finished after cutting of 1/32" deep relief areas.
   c.) Longitudinal welds to be visually and shop dye checked at 0.06" from finish
3.) Existing ø1 3/4" flange hole patterns to be balanced out best case before boring on a true bolt circle to the dimensions given.
4.) Sleeve to be 100% P/T'd after final machining
5.) Shaft to be painted per drawing 54220.

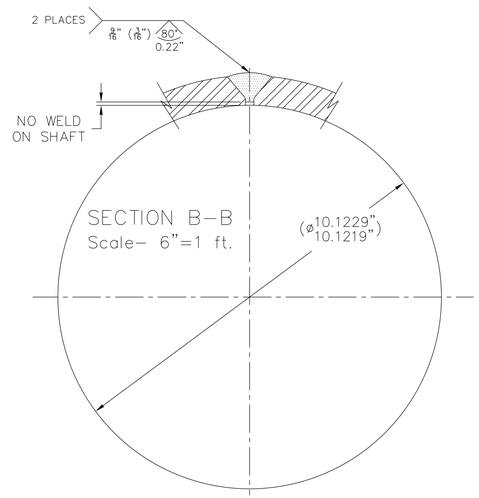

WELD PROCEDURE:
1.) Place sleeve halves on shaft equaling out the root openings
2.) Clamp over sleeve 2 to 3 places to hold to shaft
3.) Pre−heat 150−200° C
4.) Weld using 309L filler metal
   ** DO NOT WELD TO SHAFT ALONG LONGITUDINAL WELD
5.) Perform shop dye check of as−welded condition

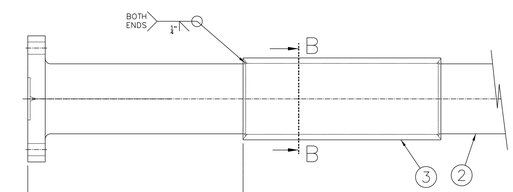

ITEM 1
EXTENSION SHAFT w/SLEEVE
WELD DETAIL
Scale− 1 1/2"=1 ft.

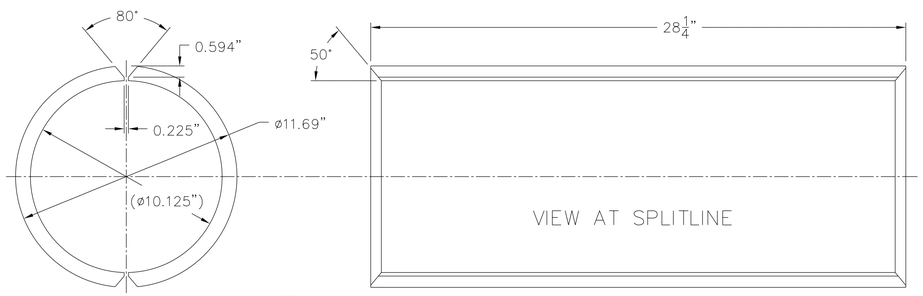

ITEM 3
GOVERNMENT SUPPLIED SLEEVE (SPLIT)
AS SUPPLIED DIMENSIONS
Scale− 3"=1 ft.

AS−CONSTRUCTED

TOLERANCES; UNLESS OTHERWISE SPECIFIED
X.XXX= +/−.010"
X.XX= +/−.020"
X.X= +/−.030"
Frac.= +/−1/64"
Angle= +/− 1 Deg.
Break All Edges .005"/.010"
√ = 125 RMS

QUANTITY	ITEM NO.	PART NAME, TYPE	LB. EACH	REFERENCE	MATERIAL
1	3	Shaft Sleeve, Split	215		Stainless Steel AISI 420
1	2	Pump Extension Shaft− Refurb Exsitng	6,050		Carbon Steel Forging ASTM A235 CL E
1	1	Pump Extension Shaft/Sleeve Assembly	(6,265)		

CURRENT REV. C

REV.	DATE	BY	CHANGES
A	09/30/11	JRW	−3/16" x 15° CHAMFERS WAS 1/16" x 45°
B	10/17/11	JRW	−CORRECTED NUMBER OF FLANGE HOLES SHOWN TO 10
C	09/12/12	JRW	−AS−CONSTRUCTED− NO CHANGES FROM REV B

Quality Service Since 1862

DATE 06/13/11 | DRAWN BY JR Ward | CHECKED BY
SCALE AS NOTED | UNIT NUMBER W−3036 | APPROVED BY

The James Leffel & Co.
Manufacturers of
HYDRAULIC TURBINES

CONTRACT NO: W9127N−10−C−0029
CLIN 0106 | NEXT ASSEMBLY WORTHINGTON SL 11589
DRAWING TITLE
EXTENSION SHAFT WITH SLEEVE REFURB EXISITNG
DRAWING NUMBER 54193
SHEET SIZE ANSI−D | SHEET NO 1 OF 1

USACE−PORTLAND JOHN DAY DAM, RUFUS, OR — PURCHASER, SITE
R−120627 — ORDER NUMBER

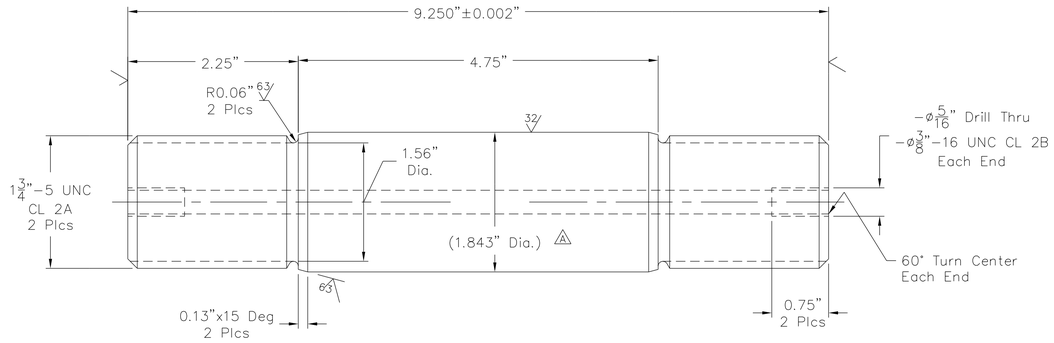

MANUFACTURING DETAIL
Item #1
Pump – Extension Shaft
Extension–Gearbox Shaft
Coupling Studs

FULL SCALE

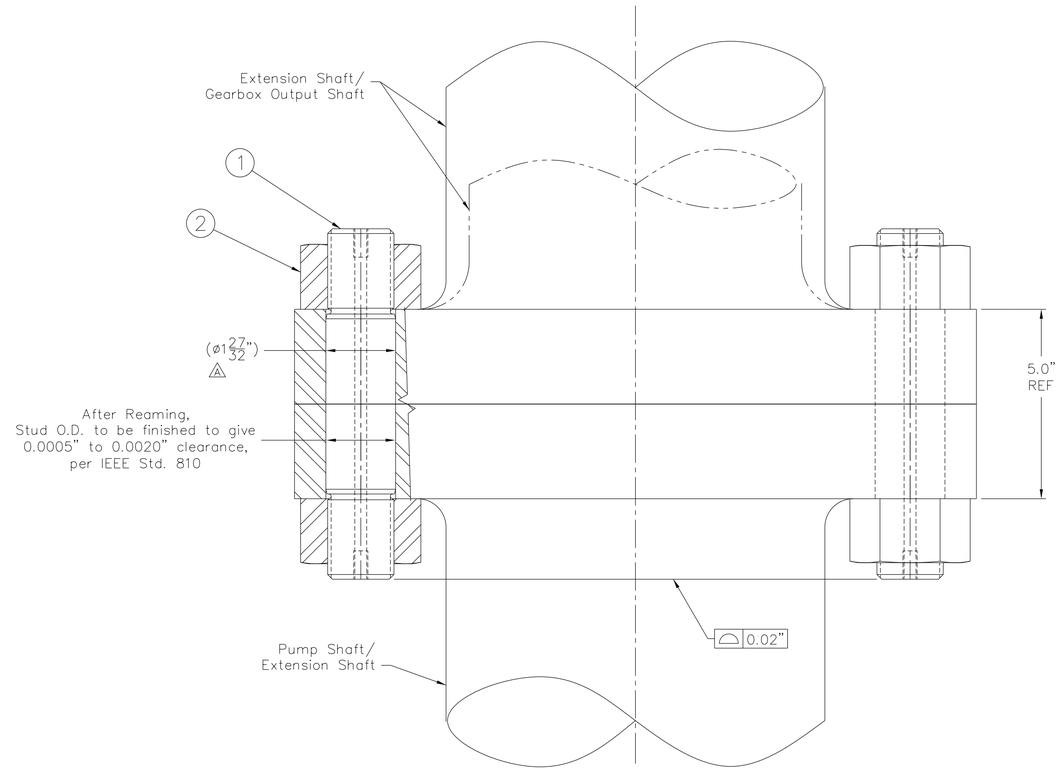

REFERENCE ASSEMBLY VIEW
PUMP SHAFT to EXTENSION SHAFT
EXTENSION SHAFT to GEARBOX SHAFT
Scale– 1:2

A MANUFACTURING & LINE REAMING OUTLINE

1.) One (1) blank from each lot of material is to be turned down to 1.812", then be tension tested IAW ASTM A193
2.) The studs will be machined leaving 0.010–0.015" stock on the 1.843" diameter
3.) After the coupling holes are line–reamed to size (ø1.844"), the holes shall be gauged to the nearest 0.0001". Match stamp holes/bolts.
4.) The body of the stud will then be finish machined (ground) to give a diametrical clearance of 0.0005" to 0.0020" to the reamed coupling holes, per IEEE Std. 810
5.) The finished studs to be magnetic particle (M/T) inspected per standard practice ASTM E1444. No cracks allowed.

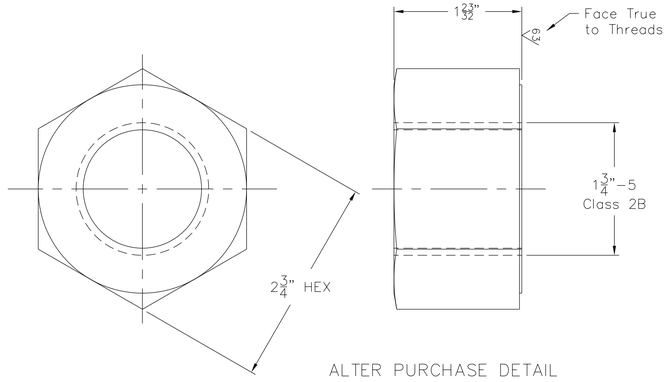

ALTER PURCHASE DETAIL
Item #2
Coupling Stud Hex Nuts

FULL SCALE

AS–CONSTRUCTED

QUANTITY	ITEM NO.	PART NAME, TYPE	L.B. EACH	REFERENCE	MATERIAL
40	2	1-3/4"-5 Hvy Hex Nuts	–		Alloy Steel ASTM A194, Gr. 7
20	1	GEN–EXT and EXT–TUR Coupling Studs	6.4	TensionTest	Alloy Steel, ø2" ASTM A193, Gr. B7

REVISIONS: B CURRENT REV.

REV.	DATE	BY	CHANGES
A	08/27/11	JRW	ø1.844" (1–27/32") REAM DIA WAS 1.813" (1–13/16)
B	09/12/12	JRW	–AS–CONSTRUCTED– NO CHANGES FROM REV A

Quality Service Since 1862

DATE	DRAWN BY	CHECKED BY
06/13/11	JR Ward	

SCALE	UNIT NUMBER	APPROVED BY
AS NOTED	W–3036	

The James Leffel & Co.
Manufacturers of
HYDRAULIC TURBINES

CONTRACT NO: W9127N–10–C–0029
CLIN: 0105/0106
NEXT ASSEMBLY: –
DRAWING TITLE: COUPLING STUDS/NUTS PUMP–EXTENSION SHAFT EXTENSION–GEARBOX SHAFT
DRAWING NUMBER: 54199
SHEET SIZE: ANSI–D
SHEET NO OF: 1 1

USACE–PORTLAND
JOHN DAY DAM, RUFUS, OR
PURCHASER, SITE

R–120627
ORDER NUMBER

TOLERANCES; UNLESS OTHERWISE SPECIFIED
X.XXX= +/–.010"
X.XX= +/–.020"
X.X= +/–.030"
Frac.= +/–1/64"
Angle= +/– 1 Deg.
Break All Edges .005"/.010"
√ = 125 RMS

3.) PUMP–EXT and EXT–GEARBOX Coupling Bolts are the same
2.) Material certifications given results of chemical and physical test result shall be supplied for both the studs and nuts
1.) Quantities listed are for one unit
NOTES:

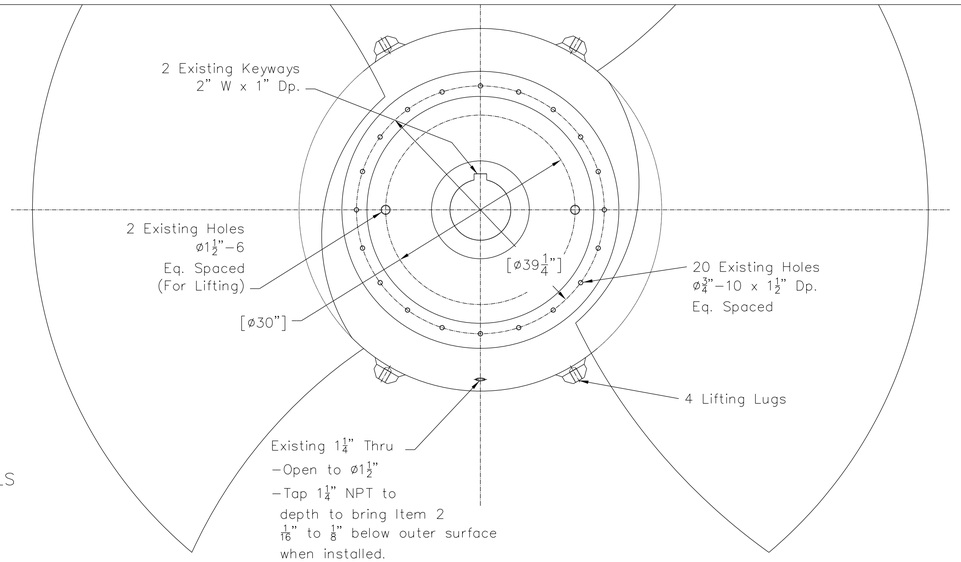

REFERENCE ORIGINAL WORTHINGTON
DRAWING RX–13799 FOR MORE DETAILS

Dimensions in brackets [X.XXX]
reference existing dimensions

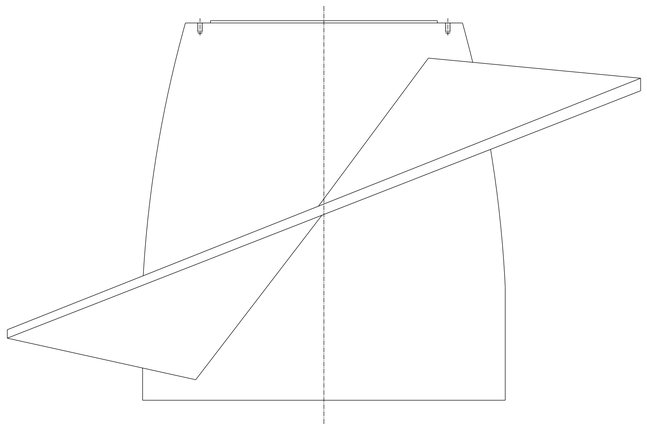

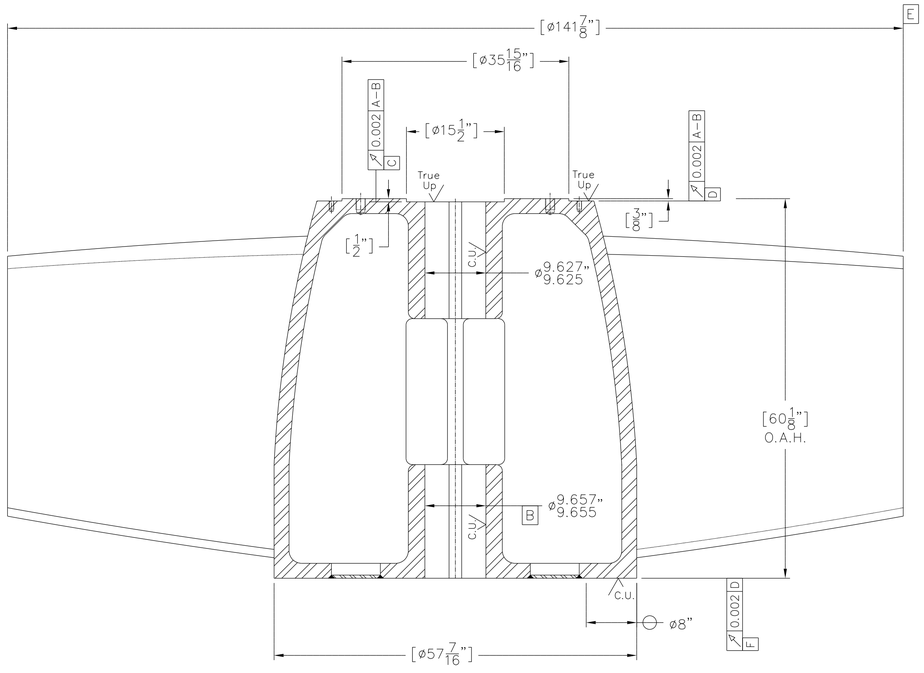

AS–CONSTRUCTED

OUTLINE OF WORK (General Note 4):

1.) Initial align to existing diameters "A" & "B" and surface "C"
2.) Determine actual size of diameter "E" and perform a T.I.R. run–out check
3.) Skim bore diameters "A" & "B" to 80%–100% clean up
4.) Take a true up cut of surface "C"
5.) Take a true up cut of surface "D"
6.) Measure and record:
  –Actual "A" & "B" diameters at three locations and +/–45° to Key
  –T.I.R run–outs of surfaces "C" & "D"

7.) Take true up cut of surface "F" to extent given.

7.) Test fit pump shaft and keys
⚠6.) Coat exterior per drawing 54220 using Enecon CL + AC
5.) Static balance
⚠4a.) Repair blade tip diameters per Drawing 54230
4.) Align, inspect, and machine per this drawing
3.) Blast, prime, and paint hub cavity with MIL–DTL–24441D, Type III Epoxy Polyamide
2.) Perform Visual and P/T or M/T of:
  –Outer diameter profile surface and blades, existing surface "C', and existing bores "A" & B'"
1.) Remove shaft from propeller
NOTES:

TOLERANCES; UNLESS
OTHERWISE SPECIFIED
X.XXX= +/–.010"
X.XX= +/–.020"
X.X= +/–.030"
Frac.= +/–1/64"
Angle= +/– 1 Deg.
Break All Edges .005"/.010"
✓= 125 RMS

QUANTITY	ITEM NO.	PART NAME, TYPE	L.B. EACH	REFERENCE	MATERIAL
1	2	1–1/4" NPT Hex Socket Pipe Plug			304 S/S McMaster: 4464K367
1	1	Pump Propeller	22,000		Cast Carbon Steel QQ–S–681D, CL 65–35

REVISIONS: B CURRENT REV.

REV.	DATE	BY	CHANGES
A	10/14/11	JRW	–ADDED GENERAL NOTE 4a –CODRECTED DRAWING NOTE 6 TO READ DWG 54220
B	09/12/12	JRW	–AS–CONSTRUCTED– NO CHANGES FROM REV A

Quality Service Since 1862

The James Leffel & Co.
Manufacturers of
HYDRAULIC TURBINES

USACE–PORTLAND
JOHN DAY DAM, RUFUS, OR
PURCHASER, SITE

R–120627
ORDER NUMBER

DATE: 08/16/11 | DRAWN BY: JR Ward | CHECKED BY:
SCALE: 1"=1 ft. | UNIT NUMBER: W–3036 | APPROVED BY:

CONTRACT NO: W9127N–10–C–0029

CLIN: 0105 | NEXT ASSEMBLY: WORTHINGTON SL 11589

DRAWING TITLE
PUMP PROPELLER REFURBISHMENT

DRAWING NUMBER
54221

SHEET SIZE: ANSI–D | SHEET NO: 1 OF 1

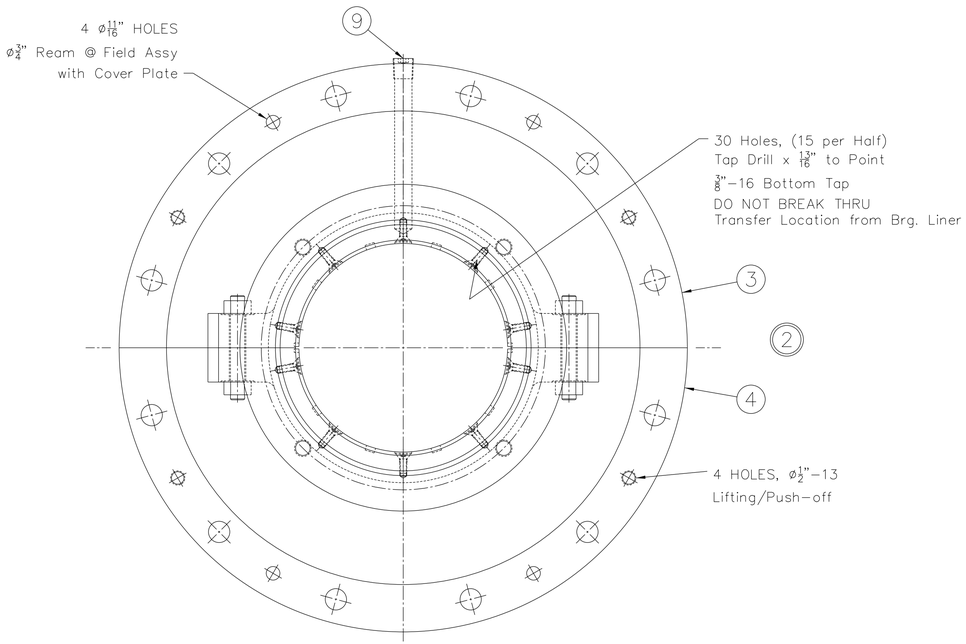

ITEM 1
LINER INSTALL &
FINAL MACHINE

Scale 3"=1 ft.

SEE SHEET 2 FOR
PRE-LINER INSTALL MACHINING

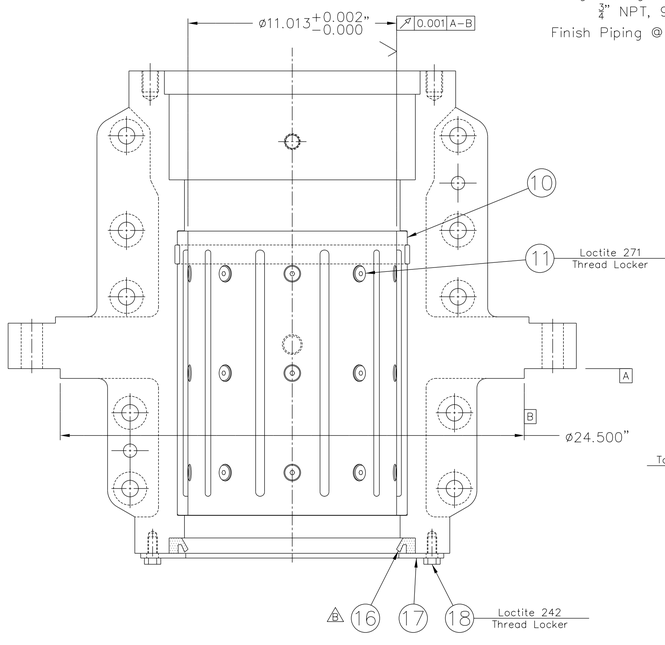

VIEW AT
SPLITLINE

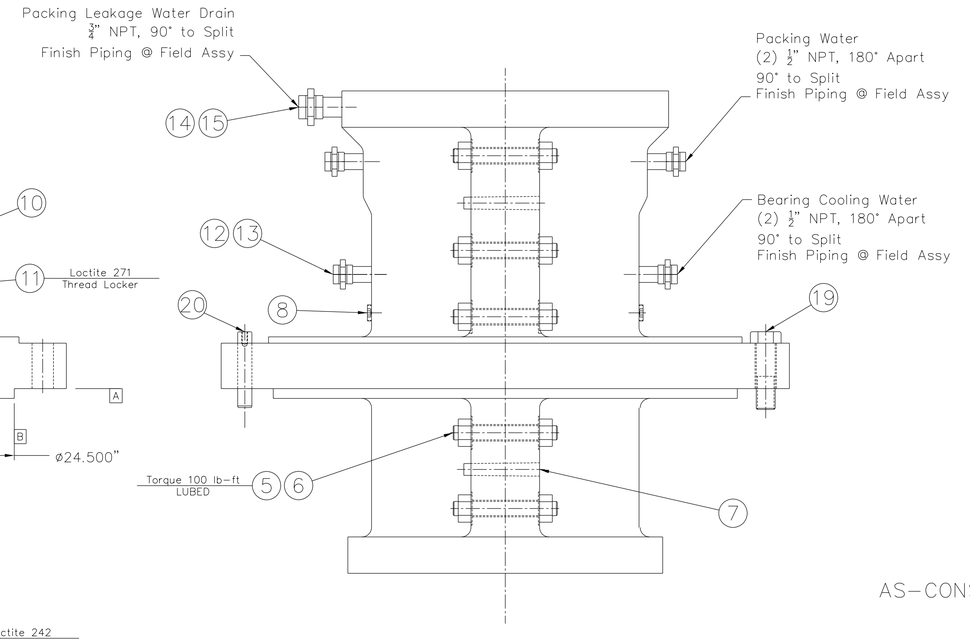

AS-CONSTRUCTED

QUANTITY	ITEM NO.	PART NAME, TYPE	LB. EACH	REFERENCE	MATERIAL
4	20	ø3/4" x 4" Vented Pull Dowel	-		Alloy Steel
12	19	ø1"-8 x 3-1/2" HHCS	-		18-8 SS, Plain
8	18	ø1/2"-13 x 1" HHCS	-		18-8 SS, Plain
1	17	Retainer Plate, Split- REUSE EXISTING	-		Carbon Steel Epoxy Polymide Paint
1	16	Split Seal, 13.000" x 11.000" x 0.813	-		NBR Garlock: 25003-4063
1	15	Pipe Nipple, 3/4" NPT x 2"	-	-	304 SS, SCH 40
1	14	Pipe Union, 3/4" NPT x 3/4" NPT	-	-	304 SS
4	13	Pipe Nipple, 1/2" NPT x 2"	-	-	304 SS, SCH 40
4	12	Pipe Union, 1/2" NPT x 1/2" NPT	-	-	304 SS
30	11	ø3/8"-16 x 1" Slotted Flat Head Screw	-		Silicon Bronze Ziegler# 37C100MSFJ
2	10	Bearing Liner, Halves	-		Non-Lube, Composite Trelleborg GBND003176
2	9	3/4" NPT Socket Pipe Plug	-		302 SS
2	8	1/2" NPT Socket Pipe Plug	-		302 SS
2	7	#10 Taper Pins	-		Carbon Steel, Plain
20	6	ø3/4" Hvy Hex Nut	-		18-8 SS, A194 Gr. B8
10	5	ø3/4"-10 x 6" Thrd Stud	-		18-8 SS, A193 Gr. B8
1	4	Upper Bearing Half "B"	1000		-
1	3	Upper Bearing Half "A"	1000		-
1	2	Upper Bearing Housing	(2000)		-
1	1	Upper Bearing Assembly	(2000)		-

OUTLINE OF MACHINE WORK:
1.) PER SHEET 2
  a.) Machine as given
2.) PER SHEET 1
  a.) Install Bearing Liner Halves
  b.) Finish bore

TOLERANCES; UNLESS
OTHERWISE SPECIFIED
X.XXX= +/-.010"
X.XX= +/-.020"
X.X= +/-.030"
Frac.= +/-1/64"
Angle= +/- 1 Deg.
Break All Edges .005"/.010"
√ = 125 RMS

REVISIONS: B CURRENT REV.

REV.	DATE	BY	CHANGES
A	12/04/11	JRW	-CORRECTED INSTALLED DIRECTION OF SEAL SEAL RING
B	09/12/12	JRW	-AS-CONSTRUCTED- NO CHANGES FROM REV A

Quality Service Since 1862

The James Leffel & Co.
Manufacturers of
HYDRAULIC TURBINES

USACE-PORTLAND
JOHN DAY DAM, RUFUS, OR
PURCHASER, SITE

R-120627
ORDER NUMBER

DATE: 09/21/11 | DRAWN BY: JR Ward | CHECKED BY:
SCALE: AS NOTED | UNIT NUMBER: W-3036 | APPROVED BY:

CONTRACT NO: W9127N-10-C-0029

CLIN: 0102 & 0141 | NEXT ASSEMBLY: -

DRAWING TITLE:
UPPER BEARING
VERTICAL PROPELLER PUMP
REFURBISHMENT

DRAWING NUMBER: 54225

SHEET SIZE: ANSI-D | SHEET NO. OF: 1 2

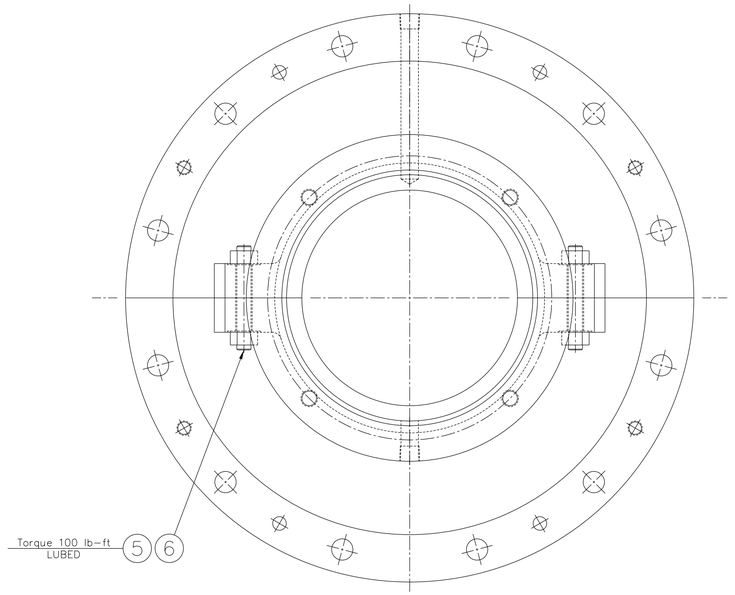

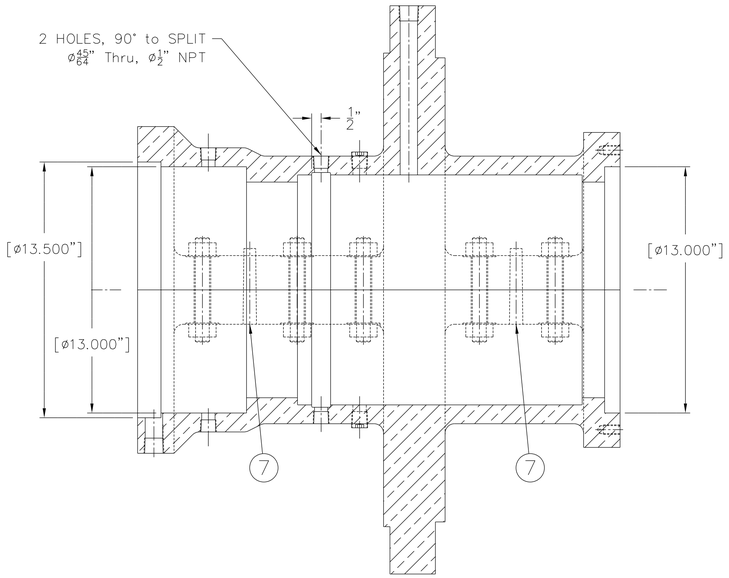

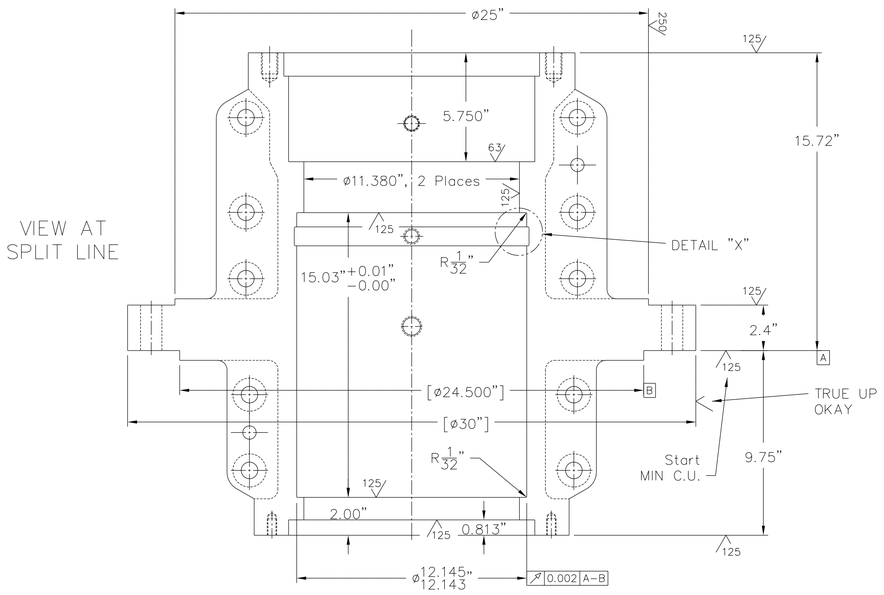

ITEM 2
MACHINING PRIOR TO INSTALL
OF BEARING LINER PER SHEET 1

Scale 3"=1 ft.

INITIAL ALIGNMENT and WORK
TO BE TRUE TO ORIGINAL
SURFACE "A" and "DIAMETER "B"

DIMENSIONS IN BRACKETS [X.XXX]
REFERENCE EXISTING DIMENSIONS

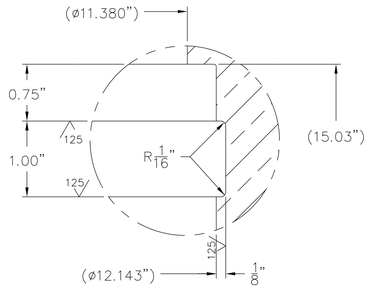

DETAIL "X"
Scale- FULL

AS-CONSTRUCTED

TOLERANCES; UNLESS
OTHERWISE SPECIFIED
X.XXX= +/-.010"
X.XX= +/-.020"
X.X= +/-.030"
Frac.= +/-1/64"
Angle= +/- 1 Deg.
Break All Edges .005"/.010"
√ = 125 RMS

QUANTITY	ITEM NO.	PART NAME, TYPE	L.B. EACH	REFERENCE	MATERIAL

REVISIONS

REV.	DATE	BY	CHANGES
A	12/04/11	JRW	-SEE SHEET 1
B	09/12/12	JRW	-SEE SHEET 1

CURRENT REV. B

Quality Service Since 1862

DATE	DRAWN BY	CHECKED BY
09/21/11	JR Ward	

SCALE	UNIT NUMBER	APPROVED BY
AS NOTED	W-3036	

The James Leffel & Co.
Manufacturers of
HYDRAULIC TURBINES

USACE-PORTLAND
JOHN DAY DAM, RUFUS, OR
PURCHASER, SITE

CONTRACT NO: W9127N-10-C-0029

CLIN: 0102 & 0141

NEXT ASSEMBLY: SHEET 1

DRAWING TITLE
UPPER BEARING
VERTICAL PROPELLER PUMP
REFURBISHMENT

DRAWING NUMBER: 54225

R-120627
ORDER NUMBER

SHEET SIZE: ANSI-D

SHEET NO OF: 2 2

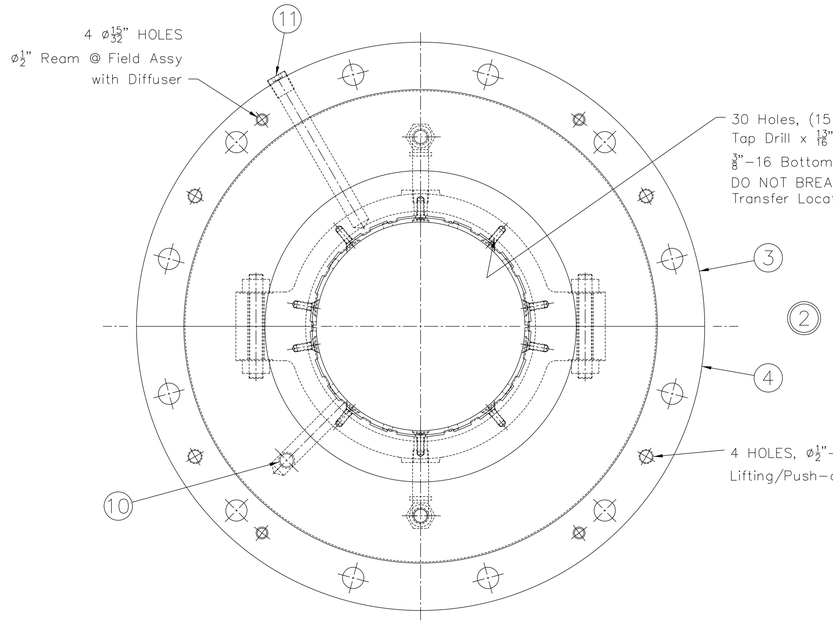

ITEM 1
LINER INSTALL &
FINAL MACHINE

Scale 3"=1 ft.

SEE SHEET 2 FOR
PRE–LINER INSTALL MACHINING

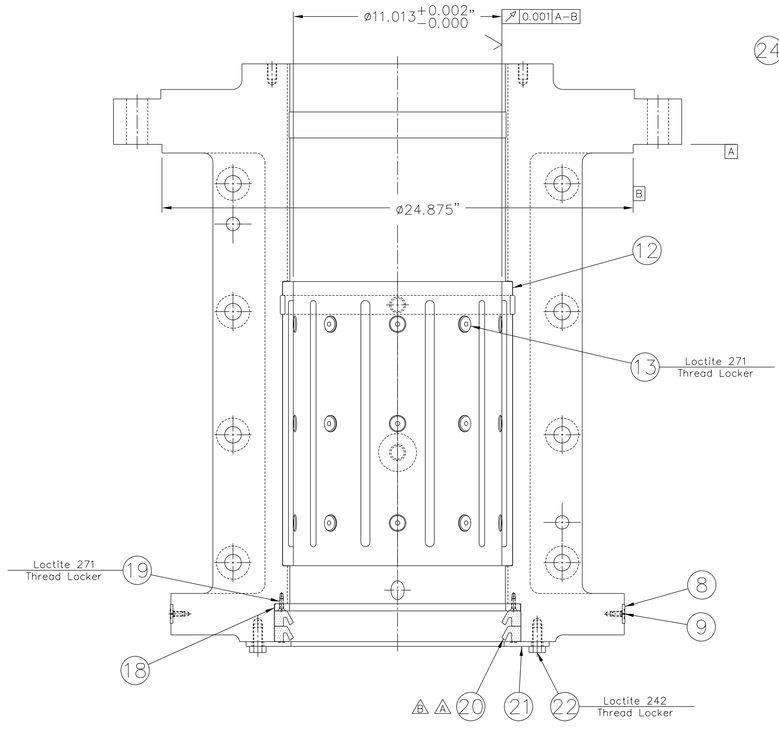

VIEW AT
SPLITLINE

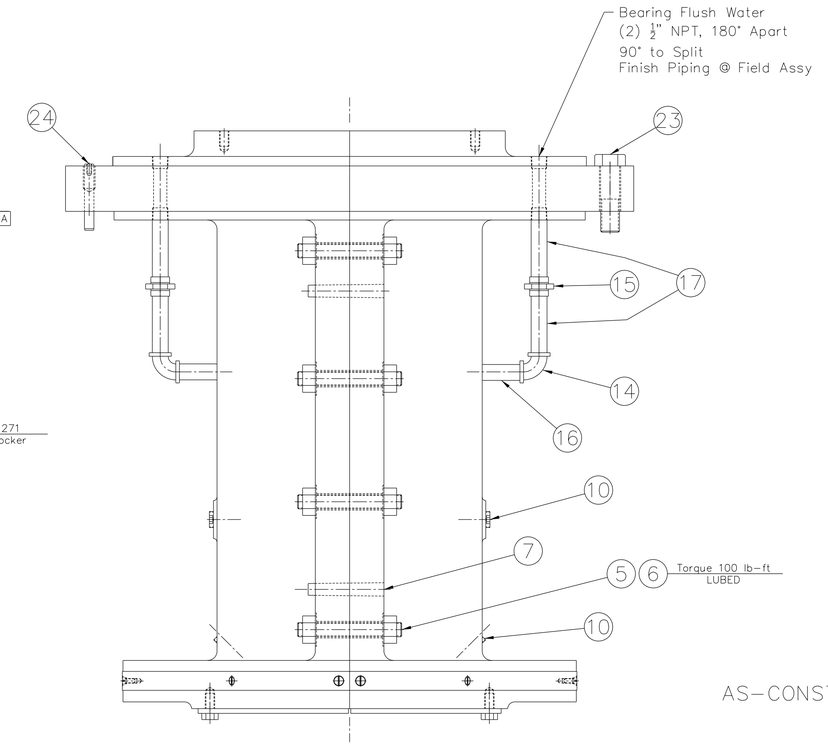

AS–CONSTRUCTED

OUTLINE OF MACHINE WORK:
1.) PER SHEET 2
- a.) Attach Band Halves
- b.) Weld repair gouge
- c.) Machine as given

2.) PER SHEET 1
- a.) Install Bearing Liner Halves
- b.) Finish bore
- c.) Manufacture Spacer

TOLERANCES; UNLESS
OTHERWISE SPECIFIED
X.XXX= +/–.010"
X.XX= +/–.020"
X.X= +/–.030"
Frac.= +/–1/64"
Angle= +/– 1 Deg.
Break All Edges .005"/.010"
√ = 125 RMS

4	24	ø1/2" x 3-1/2" Vented Pull Dowel	–		Alloy Steel
12	23	ø1"-8 x 3-1/2" Hex Bolt	–		18-8 SS, Plain
8	22	ø1/2"-13 x 1" HHCS	–		18-8 SS, Plain
1	21	Retainer Plate, Split- REUSE EXISTING	–		Carbon Steel Epoxy Polymide Paint
A	2	20	Split Seal, 13.000" x 11.000" x 0.813	–		NBR Garlock: 25003-4063
A	8	19	#10-32 x 5/8" Slotted Flat Head Scrw	–		Silicon Bronze Ziegler# 10F150MSFJ/FINE
1	18	Spacer, Split	–	–	Phenolic Gr CE
4	17	Pipe Nipple, 1/2" NPT x 4"	–	–	304 SS, SCH 40
2	16	Pipe Nipple, 1/2" NPT x 3"	–	–	304 SS, SCH 40
2	15	Pipe Union, 1/2" NPT x 1/2" NPT	–	–	304 SS
2	14	Female 90° Elbow, 1/2 NPT	–	–	304 SS
30	13	ø3/8"-16 x 1" Slotted Flat Head Screw	–		Silicon Bronze Ziegler# 37C100MSFJ
2	12	Bearing Liner, Halves	–		Non-Lube, Composite Trelleborg GBND003176
1	11	3/4" NPT Socket Pipe Plug	–		304 SS
5	10	1/2" NPT Socket Pipe Plug	–		302 SS
10	9	1/4"-20 x 5/8" Slotted Flat Head Scrw	–		Silicon Bronze Ziegler# 25C62MSFJ
2	8	Band Halves, 3/16" x 1" Wide x 37-3/4"	–		Brass, Alloy 360
2	7	#10 Taper Pins	–		Carbon Steel, Plain
20	6	ø3/4" Hvy Hex Nut	–		18-8 SS, A194 Gr. B8
10	5	ø3/4"-10 x 6" Thrd Stud	–		18-8 SS, A193 Gr. B8
1	4	Lower Bearing Half "B"	1000		–
1	3	Lower Bearing Half "A"	1000		–
1	2	Lower Bearing Housing	(2000)		–
1	1	Lower Bearing Assembly	(2000)		–
QUANTITY	ITEM NO.	PART NAME, TYPE	LB. EACH	REFERENCE	MATERIAL

CURRENT REV. C

REVISIONS	REV.	DATE	BY	CHANGES
	A	10/26/11	JRW	-ADDED SECOND ITEM 22 SEAL RING
	B	12/04/11	JRW	-CORRECTED INSTALLED DIRECTION OF SEAL SEAL RINGS
	C	09/12/12	JRW	-AS-CONSTRUCTED- NO CHANGES FROM REV B

Quality Service Since 1862

The James Leffel & Co.
Manufacturers of
HYDRAULIC TURBINES

DATE 09/21/11	DRAWN BY JR Ward	CHECKED BY
SCALE AS NOTED	UNIT NUMBER W-3036	APPROVED BY

USACE-PORTLAND
JOHN DAY DAM, RUFUS, OR
PURCHASER, SITE

R-120627
ORDER NUMBER

CONTRACT NO: W9127N-10-C-0029

DRAWING TITLE
LOWER BEARING
VERTICAL PROPELLER PUMP
REFURBISHMENT

CLIN 0101 & 0140

NEXT ASSEMBLY -

DRAWING NUMBER 54226

SHEET SIZE ANSI-D

SHEET NO 1 OF 2

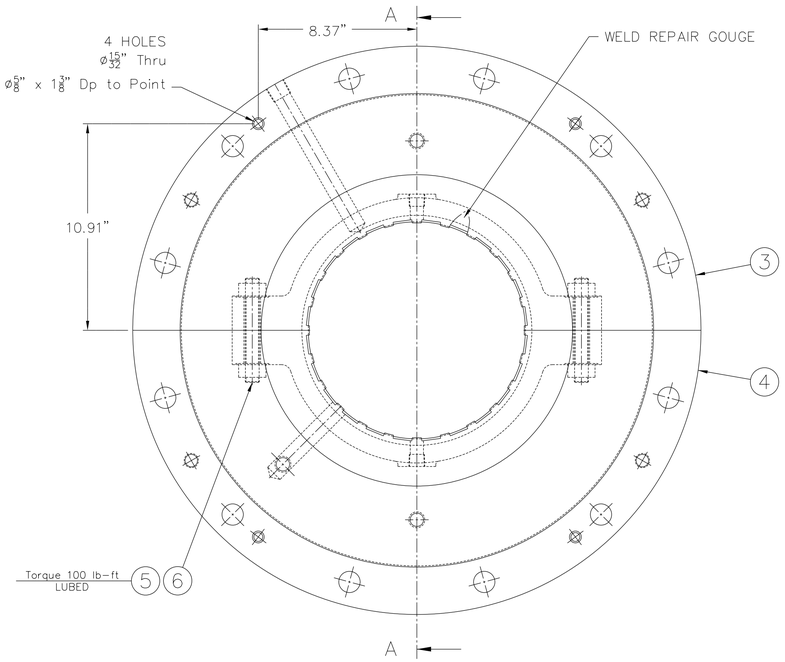

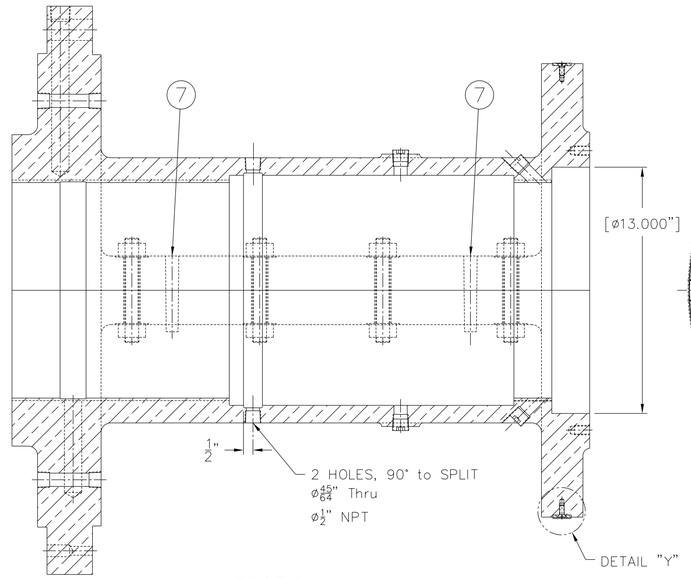

SECTION A–A

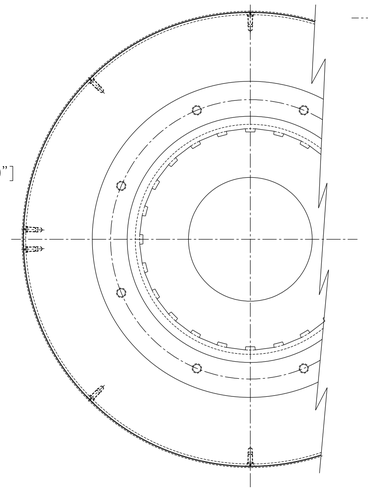

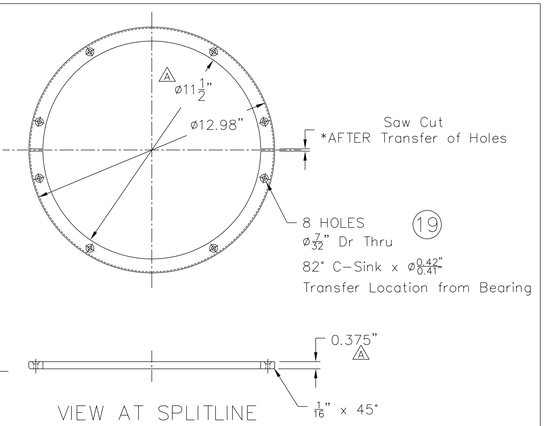

VIEW AT SPLITLINE

ITEM 18
SPACER
Scale 3"=1 ft.

VIEW AT
SPLIT LINE

TOLERANCES; UNLESS
OTHERWISE SPECIFIED
X.XXX= +/-.010"
X.XX= +/-.020"
X.X= +/-.030"
Frac.= +/-1/64"
Angle= +/- 1 Deg.
Break All Edges .005"/.010"
√ = 125 RMS

ITEM 2
MACHINING PRIOR TO INSTALL
OF BEARING LINER PER SHEET 1

Scale 3"=1 ft.

INITIAL ALIGNMENT and WORK
TO BE TRUE TO ORIGINAL
SURFACE "A" and "DIAMETER "B"

DIMENSIONS IN BRACKETS [X.XXX]
REFERENCE EXISTING DIMENSIONS

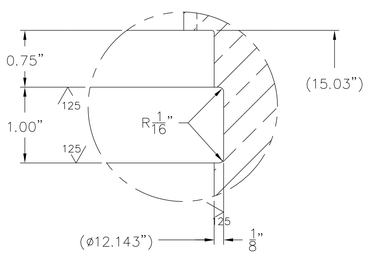

DETAIL "X"
Scale– FULL

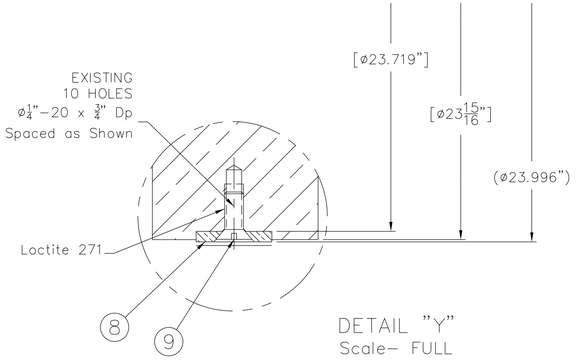

DETAIL "Y"
Scale– FULL

AS–CONSTRUCTED

QUANTITY	ITEM NO.	PART NAME, TYPE	LB. EACH	REFERENCE	MATERIAL

REV.	DATE	BY	CHANGES
A	10/26/11	JRW	-SEE SHEET 1
B	12/04/11	JRW	-SEE SHEET 1
C	09/12/12	JRW	-SEE SHEET 1

C CURRENT REV.

DATE	DRAWN BY	CHECKED BY
09/21/11	JR Ward	
SCALE	UNIT NUMBER	APPROVED BY
AS NOTED	W-3036	

CONTRACT NO: W9127N-10-C-0029

DRAWING TITLE

LOWER BEARING
VERTICAL PROPELLER PUMP
REFURBISHMENT

USACE-PORTLAND
JOHN DAY DAM, RUFUS, OR
PURCHASER, SITE

R-120627
ORDER NUMBER

Quality Service Since 1862

The James Leffel & Co.
Manufacturers of
HYDRAULIC TURBINES

CLN: 0101 & 0140
NEXT ASSEMBLY: 54123

DRAWING NUMBER: 54226

SHEET SIZE: ANSI-D
SHEET NO. OF: 2 2

Dimensions in brackets [X.XXX]
reference existing dimensions

REFERENCE ORIGINAL WORTHINGTON
DRAWING RX-13799 AND LEFFEL DWG 54221
FOR MORE DETAILS

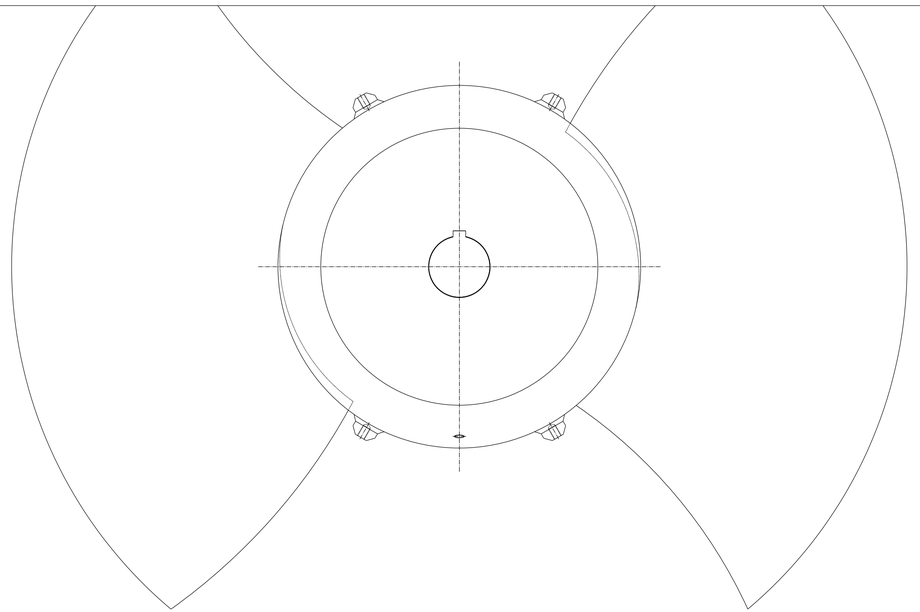

OUTLINE OF REPAIR WORK::
1.) This work preformed after true up machining per drawing 54221.
-Bore dimensions given here are the trued up sizes
2.) MIG weld up blade tips to assure clean-up for machining
3.) P/T Inspect weld build up
4.) Turn blade tip diameters per drawing
5.) Static Balance, Blast/Coat Exterior, and Test Fit Pump Shaft & Keys per 54221 drawing Notes 5, 6, & 7.

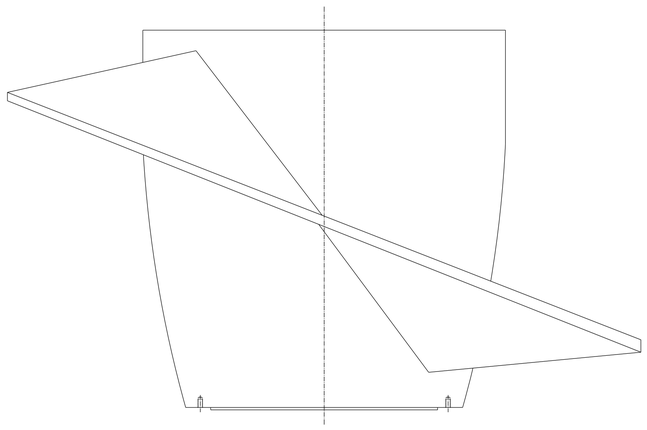

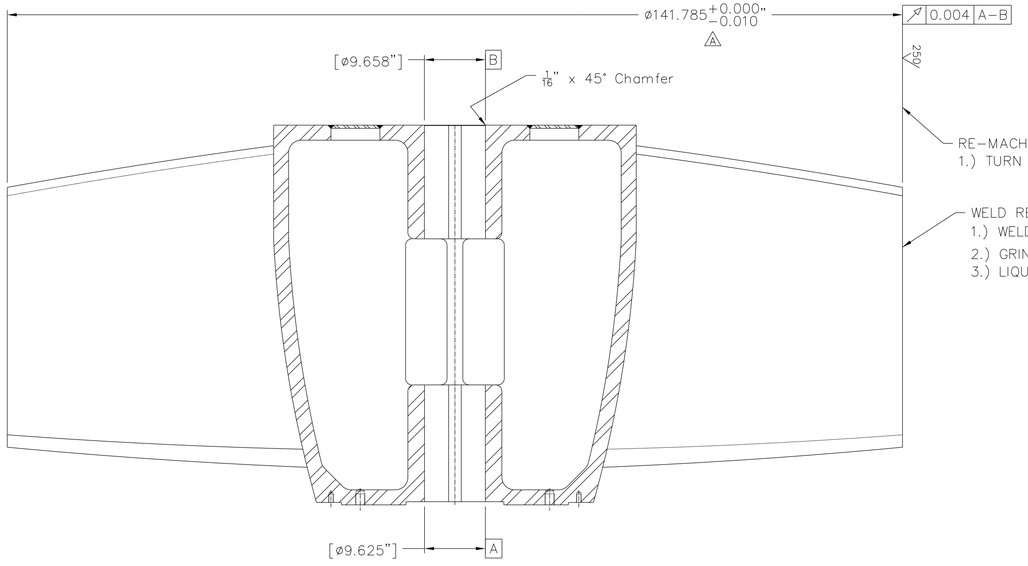

AS-CONSTRUCTED

TOLERANCES; UNLESS
OTHERWISE SPECIFIED
X.XXX= +/-.010"
X.XX= +/-.020"
X.X= +/-.030"
Frac.= +/-1/64"
Angle= +/- 1 Deg.
Break All Edges .005"/.010"
√ = 125 RMS

⚠ 1.) The Enecon coating to be applied after machining has a DFT of 0.024"/0.030"
The post coating blade tip diameter will be in the range of: 141.833" to 141.845"
NOTES:

QUANTITY	ITEM NO.	PART NAME, TYPE	LB. EACH	REFERENCE	MATERIAL
1	1	Pump Propeller	22,000		Cast Carbon Steel QQ-S-681D, CL 65-35

CURRENT REV. B

REVISIONS

REV.	DATE	BY	CHANGES
A	10/14/11	JRW	-REVISED FINAL DIAMETER PER RFI-0030 & RFI-0033 -REVISED WG NOTE 1 TO READ 141.833" to 141.845" -ADDED 1/16" x 45° CHAMFER TO BORE "B"
B	09/12/12	JRW	-AS-CONSTRUCTED- NO CHANGES FROM REV A

Quality Service Since 1862

DATE	DRAWN BY	CHECKED BY
10-02-11	JR Ward	

SCALE	UNIT NUMBER	APPROVED BY
1"=1 ft.	W-3036	

The James Leffel & Co.
Manufacturers of
HYDRAULIC TURBINES

USACE-PORTLAND
JOHN DAY DAM, RUFUS, OR
PURCHASER, SITE

R-120627
ORDER NUMBER

CONTRACT NO: W9127N-10-C-0029

CLIN 0146

NEXT ASSEMBLY -

DRAWING TITLE
PUMP PROPELLER
BLADE TIP
DIAMETER REPAIR

DRAWING NUMBER 54230

SHEET SIZE ANSI-D

SHEET NO 1 OF 1

THE JAMES LEFFEL & CO.

Manufactures of

HYDRAULIC TURBINES

1978 Commerce Circle—Springfield, Ohio USA 45504-2012

Phone (937) 322-0116 Telefax (937) 322-0467

SECTION 8

THE JAMES LEFFEL & CO.

Manufactures of

HYDRAULIC TURBINES

1978 Commerce Circle—Springfield, Ohio USA 45504-2012

Phone (937) 322-0116 Telefax (937) 322-0467

SECTION 8

RE-INSTALLATION DATA

The following is provided in this section:

Leffel Re-installation Procedure..... 3 pages

Leffel Alignment Check Procedure.....13 pages

Re-installation Data.....21 pages

Submittal 48 13 13.02 26 Item 3

John Day Dam, Unit 3 So. Fish Turbine/Pump Rehab

Reassembly Procedure

General:

A. The Project will provide crane support. With each Thursday's coordination meeting a "Project Support Request List" shall be prepared and provided the Project for the next weeks support request.
B. The Project will also provide the following:
    a. The project will be responsible for connection of water and oil piping to the gearbox and be responsible for electrical connection of the pump and gearbox.
    b. The project will provide cooling water to the top of the cover plate by the base ring for both the packing box and the upper bearing liner.
    c. The project will provide cooling water to the top of the diffuser by the extension cone for the lower bearing liner.
C. Mounting surfaces and flanges to be visually inspected and cleaned prior to setting of any equipment.
D. Mating surfaces exposed to water where gaskets are not used, use Loctite Gasket Eliminator No. 504.
E. Except as otherwise noted, food grade anti-seize to be applied to all fasteners
F. All components, fasteners, and auxiliaries required for any particular step of work should be checked out, cleaned of corrosion protection, and staged in the area of work.
G. Measures have been taken during the shop rehab to provide a 1/8" shimming allowance for the spiral case, turbine bearings, and draft tube. Shim packs have also been provided.
H. Final fastener torques to be per Transmittal 48 13 13.02 26-2, Submittal Item 7
    a. Major connections:
        i. All preliminary and final torques of major connections shall be recorded
        ii. For all preliminary and final torques during any day, a copy shall be provided to the onsite government representative
        iii. Notification of 7 days shall be given to the onsite Government representative for prior to final torque check of all major connections
        iv. Major connections include the following:
            1. Pump Diffuser to Casing
            2. Pump Cover Plate to Base Ring
            3. Gearbox Base to Base Ring
            4. Gearbox to Gearbox Base
            5. Pump Shaft to Extension Pump Shaft
            6. Extension Shaft to Gearbox Output Shaft
            7. Turbine to Gearbox Coupling
            8. All other fasteners of ¾" diameter and larger
    b. A checklist of all minor faster torque shall be maintained

1.) Pre-setting of turbine
    a. The turbine spiral case/gate casing assembly can be set preliminarily. Final adjustment/alignment with gearbox to be made once vertical shafting alignment is complete.
    b. Any turbine re-installation work that will still allow installation of the pump and gearbox can proceed ahead of or during pump/gearbox installation
2.) Prepare pit for lowering of propeller
3.) Lower propeller end cover and propeller nut into pit
4.) Lower propeller and set centered/level in pit approx 10" low to normal setting. Level, center, and stake.
5.) Lower diffuser into pit and set on original dowels.
6.) Check lower diffuser bore to pit liner center, adjust as/if needed.
7.) Torque and dowel diffuser
8.) Install aluminum work deck atop diffuser
9.) Lower lower pump bearing and diffuser extension cone atop aluminum work deck.
10.) Set pump cover plate on original dowels.
11.) Check center of cover plate's bearing bolt down holes to centerline of lower bore in diffuser using weighted wire, adjust as/if needed.
12.) Torque and dowel cover plate
13.) True up machine level to earth:
    a. Lower pump bearing mounting surfaces on diffuser
    b. Diffuser extension cone mounting surface on diffuser
    c. Upper pump bearing mounting surface on cover plate
14.) Lower pump shaft into propeller, install propeller nut.
15.) Using "dummy" lower bearing flange, raise shaft/propeller to set on rotor support ring to known low elevation.
    a. Center, level, and stake.
16.) Lower pump extension shaft atop pump shaft.
    a. Secure with temporary bolts.
17.) Lower upper pump bearing and manhole covers atop pump cover plate
18.) Set gearbox base and gearbox.
    a. Bring to elevation, level, and center.
19.) Perform alignment check of gearbox output shaft.
20.) Couple extension shaft to gearbox shaft.
21.) Line ream coupling bolts holes at gearbox shaft/extension shaft connection.
    a. With new coupling bolts final ground for fit, install and pre-torque to pre-plumb.
22.) Perform alignment of combined gearbox shaft/extension shaft
    a. Target final torque of coupling bolts = 2,182 lb-ft
23.) Couple pump shaft to extension shaft
24.) Line ream coupling bolts holes at extension shaft/pump shaft connection.
    a. With new coupling bolts final ground for fit, install and pre-torque to pre-plumb.
25.) Perform alignment of combined gearbox/extension/pump shaft
    a. Target final torque of coupling bolts = 2,182 lb-ft
26.) Perform combined final shaft alignment check with government witness
27.) Dowel gearbox
28.) Install upper and lower pump bearings

29.) Touch up pump paint
30.) Complete turbine install and bring turbine assembly into alignment with gearbox
31.) Perform final turbine to gearbox shaft alignment check with government witness.
32.) Perform final mechanical assembly works required for water up
    a. Perform final adjustments of wicket gates, record final clearances and closure gaps.
    b. Finalize pump bearing water supply piping
    c. Install pump shaft packing
    d. Inlet and discharge tubes
    e. Inlet and discharge dresser couplings
    f. Install manholes
33.) Perform final assembly works, making unit ready for start-up.

Shaft Alignment Check Procedure

John Day Dam, So. Fish Turbine/Pump Rehab Project

General

A shaft alignment should be performed when a new unit is assembled and when a unit is reassembled after refurbishment. The shaft alignment method described below is intended specifically for the John Day Dam South Fish Pump, Gearbox, and Turbine. Although an attempt has been made to make this procedure as complete as possible, every contingency cannot be covered nor can a written procedure completely replace good judgment as the work progresses.

Leffel Forms A & B noted in the following procedure are being submitted attached to this procedure submittal. One set of blank Leffel Forms A and B are included followed by one set made out as an example. The locations and distances given for the indicators and bearing C/L locations are preliminary and will need verified in the field.

Installation/Centering of Pump Diffuser and Cover Plate Components:

The pump propeller will be set into the pit and supported approximately 12” below normal elevation. The propeller will be brought level sufficient to allow installation of the pump shaft at a later time and in such a manner to allow lateral movement of the propeller in order to bring its shaft bore centered with the bottom end of lower pump bearing.

The diffuser will then be lowered and preliminarily located at the location of its original dowels at its main mounting flange with the embedded casing. The lower pump bearing will be installed into the diffuser. (The lower bore in the diffuser is the only close fitting locating bore for either of the pump bearings, therefore the lower bearing will be used to control the centering of the unit in the embedded pump casing.) Lateral adjustments will be made in the diffuser to bring the lower bearing centered to the embedded pump casing. Centering will be checked by use of a hanging weighted plumb wire from atop the diffuser that is centered in the bottom end of the lower bearing and extending below the diffuser to allow measurement from the wire to the pit liner wall. It is known that the pit liner is out of round; therefore six equally spaced radial measurements from the wire to the pit liner wall will be made during centering of the diffuser. These measurements will be taken with a 0.020” or 1/64” graduated scale. (From these measurements, preliminary radial propeller blade tip clearances can be calculated and considered.) Once centered, final torque of the bolts and dowelling of the diffuser will be made.

With the diffuser set, the pump cover plate will be preliminarily set at its original dowel locations. The upper bearing will be installed, leveled, and a weighted plumb wire hung from and centered in the upper bearing that extends down through the lower bearing in the diffuser. Lateral

adjustments in the cover plate will be made to bring the weighted wire centered in the bottom end of the lower bearing. Once centered, preliminary torque of the bolts and dowelling of the cover plate will be made. The cover plate will then need to be removed and lifted to a sufficient height above the fish turbine room floor to allow application of the sealant to be used (Loctite 504 gasket maker). The cover plate will then be reset, dowels re-installed, and final torque of bolts made.

Field Machining:

Due to the condition of the mounting flanges for the pump bearings on the cover plate and diffuser and the mounting flange on the diffuser for the diffuser extension cone, these three mounting surfaces will be field machined level to earth to provide sound mounting surfaces. The pump bearings will be removed and set aside for this work.

Installation of Pump Shafting:

The pump shaft can now be lowered and installed into the propeller; its propeller nut installed and tightened with the set screws through the propeller nut installed and bit into the propeller to guard against loosening. Peen these sets screws to guard against them backing out. The propeller/pump shaft assembly will then be adjusted laterally to center the shaft in the lower diffuser bore and adjusted to bring the pump shaft plumb sufficient for re-install of the lower pump bearing. With the lower pump bearing re- installed the propeller/shaft assembly will be lifted, the rotor support ring installed, and the propeller/shaft assembly rested atop the lower pump bearing with spacers installed to leave the propeller/pump shaft assembly set approximately ½" low to normal elevation. Checks and adjustments will be made to bring the

propeller/pump shaft assembly into plumb and centered in the lower bearing. To assist and hold secure, a fixture will be made up that will be secured atop the diffuser's upper surface using the existing diffuser extension cone bolt down holes.

The pump's extension shaft will then be lowered to couple up with the pump shaft. As the coupling holes are pre-bored undersize on a true bolt circle, alignment pins will be used to align the holes. Temporary studs will be used to secure the coupling connection. A recheck/readjust of plumb and center of the pump shaft will be made. The extension shaft will then be brought plumb. The upper pump bearing will be installed with shims set in the packing box bore to the shaft in order to center the shaft in the bearing. (It may be found that using fixture bars atop the bearing, similar to that used for the pump shaft, may provide a better means to assist in centering and securing the shaft.) The bearing housing will be adjusted laterally as needed to bring the shaft into the plumb. The coupling holes in the extension to pump shaft coupling will be line reamed, bolts final ground for proper fit, and coupling bolts installed. Preliminary coupling bolt torque will be made at this time to 300 ft-lbs

By this point the turbine shaft and runner assembly should be preliminarily set centered within the turbine static seal rings and turbine shaft brought level.

Setting of Gearbox:

The gearbox support base will be set, centered, and leveled. Leveling will be made by shimming between the supports 4 mounting feet and the mounting flange on the base ring at EL 131.67 to bring the upper machined mounting surface on the gearbox support level. A record of the shims

used at each location will be recorded and submitted per 48 13 13.12 26 Para 3.5.9.1. Consideration here will need to be given to the elevation of this mounting surface relative to the top of extension shaft flange, which is set approximately ½" low to normal elevation and to the horizontal centerline of the pre-set turbine within its limit of vertical and angular adjustment to satisfy the alignment requirements of the Dodge Para-Flex Coupling. Centering of support base will be made by plumb line that is centered in the upper mounting surface's 22" bore to the upper flange on the extension shaft. Measurements from the plumb line to the 9 x 1-3/4" bolt gearbox bolt down holes shall also be taken based on Worthington's drawing RW-138318.

The gearbox can now be set on the support base and leveled to manufacturer's direction and specification. (A Philadelphia Gear Corporation representative will be onsite at this time.) Leveling will made by shimming as needed at the 9 x 1-3/4" gearbox hold down bolts. A record of the shims used at each location will be recorded and submitted per 48 13 13.12 26 Para 3.5.9.1. The gearbox will be adjusted laterally to bring the gearbox output shaft in line with the extension shaft. Here the alignment of the gearbox input shaft to the turbine shaft shall also be checked and adjusted within the alignment requirements of the Dodge Para-Flex Coupling. (In order to check this alignment, oil will need to be in the gearbox to allowing turning of the gearbox shaft as indicators will be used to finalize centering as well as alignment and runout checks to follow.)

At this time the pump shafting line and propeller will be lifted to couple with the gearbox output shaft. Again here, the coupling bolt holes are pre-bored undersize therefore alignment pins will be used to align the coupling holes as the couple up is made. Temporary studs will be used to

secure the coupling connection. The coupling holes in the gearbox output shaft to extension shaft coupling will be line reamed, bolts final ground for proper fit, and coupling bolts installed. Preliminary coupling bolt torque will be made at this time to 300 ft-lbs.

At this time any centering fixtures and pump bearings will be removed.

The preceding centering and plumbing should provide a good starting point for the final adjustments and alignment per the following Leffel alignment procedure.

Alignment:

A well aligned shaft shall have a max run out of 2-3/1000" in all bearing areas and shall be plumb within 0.00025" per linear foot of shaft length. These tolerances will be the target of the final alignment.

A note should be made here that since this unit has a right angle gearbox between the driver and the driven, each step of adjustments to bring the vertical shafting inline will also require checks and any required adjustments of the turbine shaft to gearbox input shaft alignment.

First is to check that the thrust runner is perpendicular to the gearbox output shaft by means of 0.001" dial indicators. Set two indicators on the output shaft in the same vertical plane and mark the shaft flange in 90° intervals A, B, C, D, with A set at the indicator plane. The upper dial indicator (IND #1) should be placed close to upper bearing (the coupling cover, Item 8 on PGC

drawing D-52283 will need removed from the gearbox to allow access) and the lower indicator (IND #2) should be placed on the indicating band just above the output shaft's coupling flange. Set the upper indicator at 0.025" and the lower indicator at 0.050". The output shaft will then be rotated a few revolutions in order to well lubricate the bearings. The rotation will be stopped at A and the dial indicators re-set as given above and record on attached Form A's Block 1. Rotate the shaft to position B and read the indicators and record on Form A's Block 1. Continue this process likewise to C, D, and finally back to position A. Process the readings recorded on Form A's Block 1 using Form A's Blocks 2 & 3 to determine run-outs. Form A's Block 4 can be processed and plotted on Form B to give a graphical representation of the alignment, including straightness. It is noted that the gearbox, within itself, is fully factory aligned and if set level within the manufactures specification the shaft's plumb and runout should be within that given above. Leffel will defer to Philadelphia Gear on site representative to direct any required adjustments and to eventually approve this setting of the gearbox.

Now, two more indicators (IND #3 and IND# 4) will be set on the extension shaft in same vertical plane as those set on the gearbox shaft near each coupling flange, where indicating bands have been machined. Transfer the 90° interval marks A, B, C, D, from the shaft above with A set at the indicator plane. Both these indicators should be set at 0.050" when at A. Combined gearbox/extension shaft runout readings will be taken by rotating of the shafting. Record and process the readings as given earlier using Form A & B. The required adjustments to bring the extension shaft within 0.003" runout will be made through the torque up of the coupling bolts.

Now, two more indicators (IND #5 and IND #6) will be set on the pump shaft in the same vertical plane as those on the gearbox and extension shaft. The upper indicator (#5) can be placed on a machined indicating band below the pump shafts coupling and the second placed below as close to the lower bearing area as possible. Combined gearbox/extension shaft/pump shaft runout readings will be taken by rotating of the shafting. Record and process the readings as given earlier using Form A & B. The required adjustments to bring the extension shaft within 0.003" runout will be made through the torque up of the coupling bolts.

Above process will be repeated several times until the coupling bolts at the upper and lower couplings are within +/- 10% of the proposed torque of 2,182 ft-lbs submitted and approved under Transmittal 48 13 13.02 26-2, Submittal Item #7.

The plumb of the shafting will be checked by frame level readings having an accuracy of 0.00012"/12". If a 360° rotation shows out of plumb, adjustment will need made in the setting of the gearbox.

As this alignment process may have altered the center of the shafting line, this must be rechecked and adjusted to center in the lower bearing locating diameter in the diffuser.

At the time Leffel is satisfied that the vertical shafting line is straight within 0.003" runout, plumb within 0.00025"/10 ft, and centered as well as the turbine shaft to gearbox input shaft alignment is within the specified allowances of the Dodge Paraflex coupling, the government

will be notified to witness the final runout checks, which will be the same combined shaft rotational method as described above.

At this time the propeller should be staked in the casing liner and lower pump bearing installed with the bearing ID concentric to the pump shaft's bearing journal with-in 0.003" (20% of diametrical clearance.) Once set, the government will be notified to witness this final setting. The check can be made using feeler gauges or remove the propeller staking and perform a swing check.

The pump shaft can then be staked in the lower bearing and final radial propeller blade tip clearances taken, recorded, and submitted as given in 48 13 13.12 26 Para 3.5.4.1.13.a.

At this time the upper pump bearing can be installed with the bearing ID concentric to the extension shaft's bearing journal with-in 0.003" (20% of diametrical clearance.) Once set, the government will be notified to witness this final setting. The check can be made using feeler gauges.

Upon acceptance of the above alignment and bearing clearances, the pump bearings can be doweled.

The turbine bearings, including the thrust bearing elements can be finalized and doweled.

FORM A- Shaft Alignment, John Day Dam Fish Turbines

Date: **Unit:** **Run:**

DATA

IND #	A	B	C	D	A	DIST FROM IND #1 (ft)
1	25					
2	50					
3	50					
4	50					
5	50					
6	50					

CALCUALTION BLOCKS

	A	B	C	D	A
2 less1					
3 less1					
4 less1					
5 less1					
6 less1					

RUN-OUT

	A - C	B - D	A - C
2 less 1			
3 less 1			
4 less 1			
5 less 1			
6 less 1			

SJAFT CENTERLINE

	dist fr 1	a-c/2	b-d/2	a-c/2
1				
2 less 1				
3 less 1				
4 less 1				
5 less 1				
6 less 1				

Plumb Readings using a 2 sec grad level (0.00012"/12")

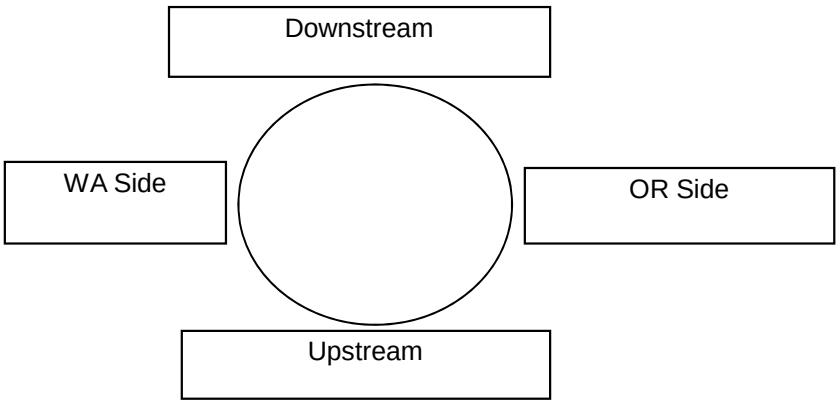

Form B
John Day U3 S. Fish Turbine
Shaft C/L Graphical Representation

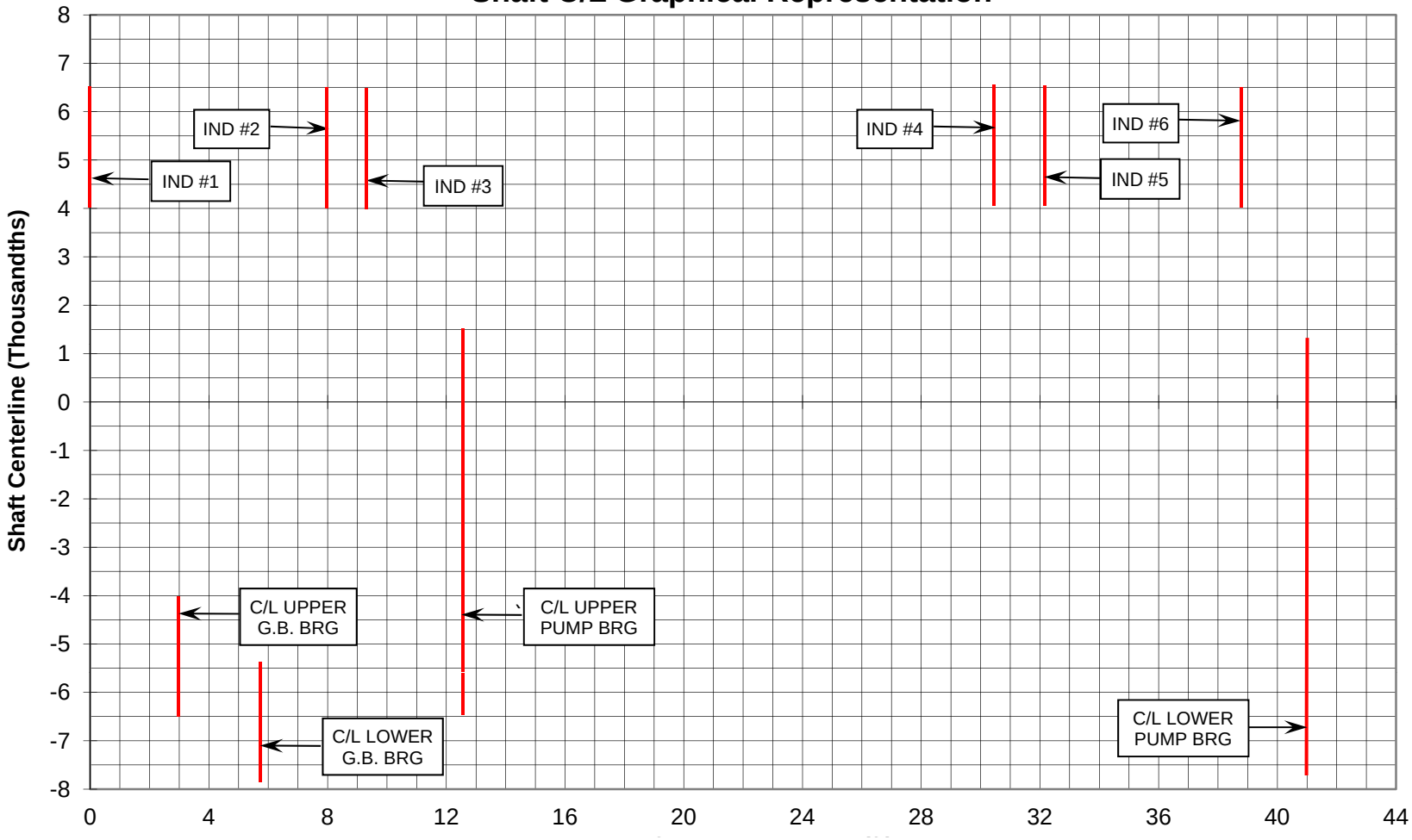

FORM A- Shaft Alignment, EXAMPLE

Date: NA **Unit:** **Run:** EXAMPLE

DATA

IND #	A	B	C	D	A	DIST FROM IND #1 (ft)
1	25	26	26	24.5	25	0
2	50	49	50	50.5	50	8
3	50	49	50	50.5	50	9.33
4	50	51	51	49.5	50	29.6
5	50	51	50	50	50	31.2
6	50	49.5	50	49	50	38.8

CALCUALTION BLOCKS

	A	B	C	D	A
2 less1	25	23	24	26	25
3 less1	25	23	24	26	25
4 less1	25	25	25	25	25
5 less1	25	25	24	25.5	25
6 less1	25	23.5	24	24.5	25

RUN-OUT

	A - C	B - D	A - C
2 less 1	1	-3	1
3 less 1	1	-3	1
4 less 1	0	0	0
5 less 1	1	-0.5	1
6 less 1	1	-1	1

SJAFT CENTERLINE

	dist fr 1	a-c/2	b-d/2	a-c/2
1	0	0	0	0
2 less 1	8	0.5	-1.5	0.5
3 less 1	9.33	0.5	-1.5	0.5
4 less 1	29.6	0	0	0
5 less 1	31.2	0.5	-0.25	0.5
6 less 1	38.8	0.5	-0.5	0.5

Plumb Readings using a 2 sec grad level (0.00012"/12")

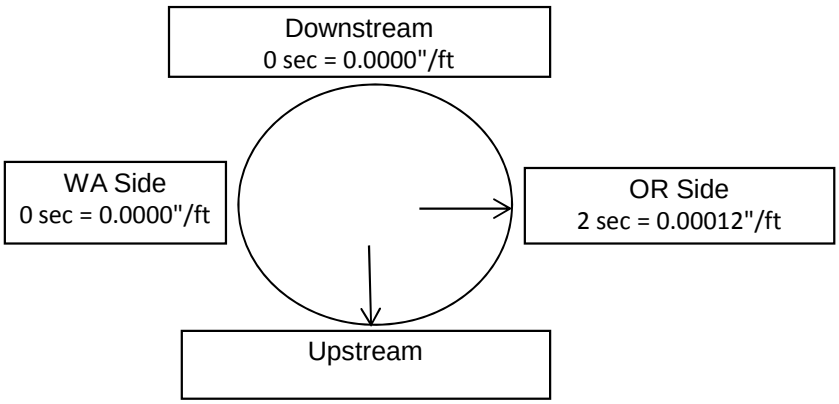

Form B
EXAMPLE
Shaft C/L Graphical Representation

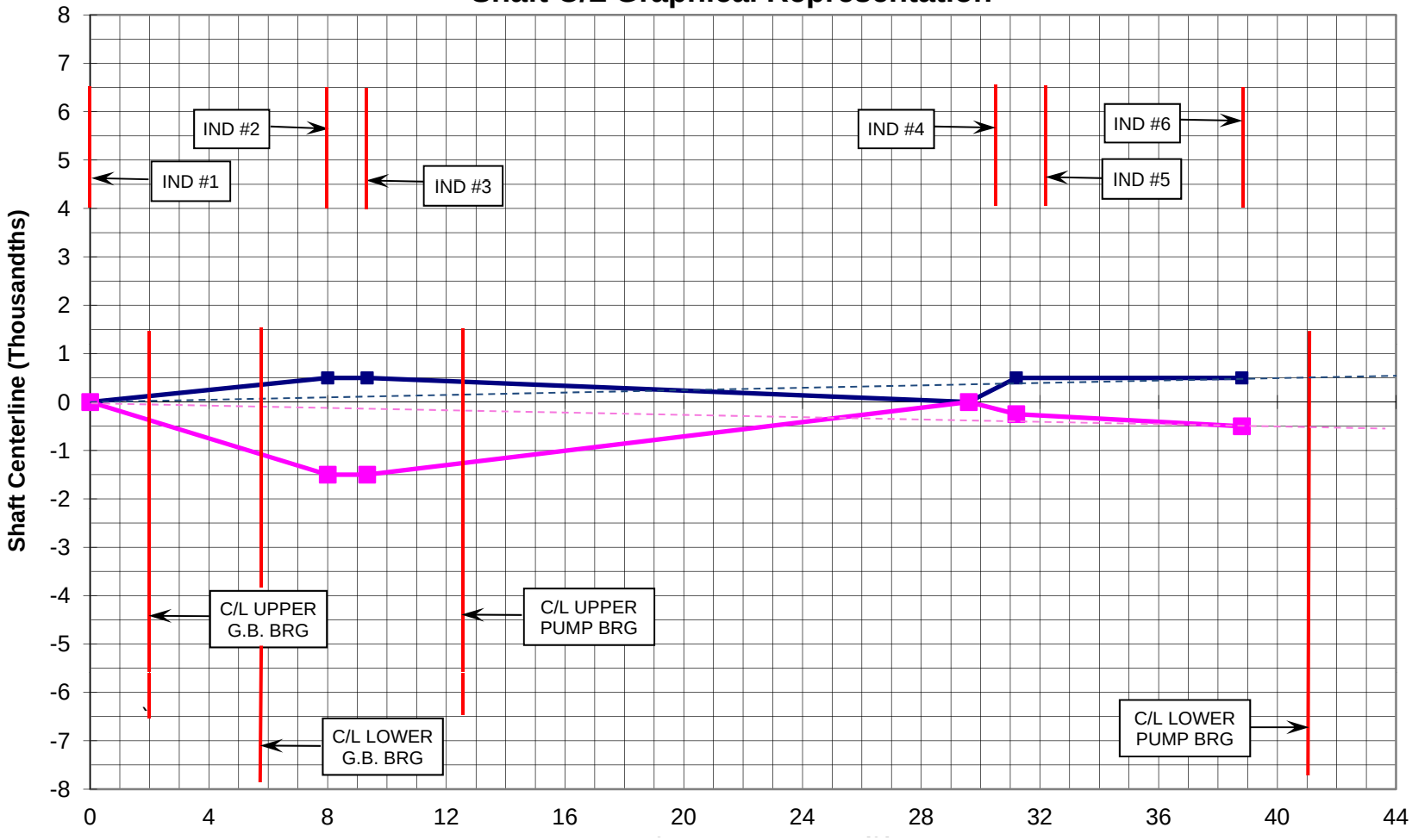

The James Leffel & Co.

Contract: W9127N-10-C-0029
John Day Dam South Fish Turbine/Pump Rehab Project
Final Reassembly Shaft Alignment

SHAFTING FINAL ALIGNMENT

UNIT: U3 S. Fish DATE: 02-11-12 BY: Mark Kastenschmidt, JLC
John Wiseman, JLC, CQM
Buck Ober, COE, QAR

VERTICAL SHAFTING LINE

The attached shafting alignment data will show that the vertical combined shafting line (Gearbox Quill Shaft, Pump Extension Shaft, and Pump Shaft) is straight within 0.001". The requirement here as taken from USBOR's Facilities Instructions, Standards, and Techniques (FIST) Volume 2-1, "Alignment of Vertical Shaft Hydrounits", which gives that:
Shaft straightness tolerance: *No reading point deviates more than 0.003 inch from a straight line connecting the top and bottom reading point.*

The alignment data shows a runout of 0.0035" at the flange of the gearbox quill shaft, a runout of 0.005" at the upper pump bearing, and a runout of 0.0235" at the lower pump bearing. Shaft runout is the combined effects of shaft straightness and shaft "Orbit." The requirement here is taken from USBOR's Facilities Instructions, Standards, and Techniques (FIST) Volume 2-1, "Alignment of Vertical Shaft Hydrounits", which gives that:

Static shaft runout (Orbit diameter) tolerance: *0.002 inch multiplied by the length of the shaft from the thrust bearing to the point of runout measurement divided by the diameter of the thrust runner. All measurements in inches.*
The diameter of the thrust runner is 25.25"
Calculating this for the reading at quill shaft flange:
(0.002" x 89") / 25.25 = 0.0070"
Calculating this for the runout reading at the upper pump bearing journal:
(0.002" x 135.5") / 25.25" = 0.0107"
Calculating this for the runout reading at the lower pump bearing journal:
(0.002" x 461.25") / 25.25" = 0.0365"

Note:
Since the shaft line is straight within 0.001", all but 0.002" of the runout can be contributed to the "Orbit diameter". In other words, if you took the combined vertical shaft assembly to a lathe, aligned Indicator 1 and Indicator 6 reading locations to zero-zero, you would find that the remaining reading locations (Indicators 2, 3, 4, & 5) would give a runout not exceeding 0.002". To further examine this, the "Orbit diameter" is a reflection of the perpendicularity of the thrust runner face to the shaft center magnified by the distance of the readings from Indicator 1. The perpendicularity can be back calculated from the runout reading. In doing so, it is found that the perpendicularity here is 0.00028". This would produce a runout on the face of the thrust runner of 0.00056" at 1 ft from center, which is within the 0.00075" TIR tolerance given by IEEE Std 810. When you project this over the distance from Indicator 1 and indicator 6 (38.44 ft) you would expect to see an orbit diameter of 0.0215" (0.00056" x 38.44 ft.)

HORIZONTAL SHAFTING LINE

The horizontal shafting line is made up of the turbine shaft and the gearbox input shaft. The shafts are coupled together by a Dodge Paraflex-Taper Lock coupling, PX280TL. This coupling is *designed to be capable of accommodating combined misalignments of 4° angularity and 1/8" parallelism at the full rating of the coupling without restricting the rating or life of the coupling*. Of course, it is expected that a shaft alignment should target an alignment well within the operating tolerances and this is given in the Dodge Para-Flex Installation Instructions Manual for the PX280 manual as:

Angular misalignment: *If using a scale or calipers, refer to Figure 3 and check the angular misalignment by measuring dimension "B" at four places 90° apart. Adjust the equipment until the four measurements do not vary more than value "C" in Table 1.*

Figure 3

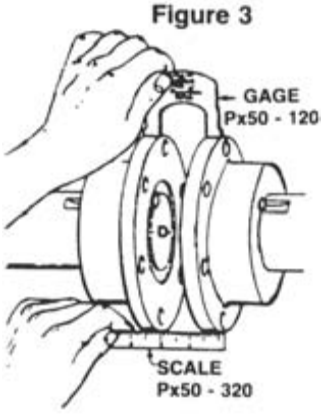

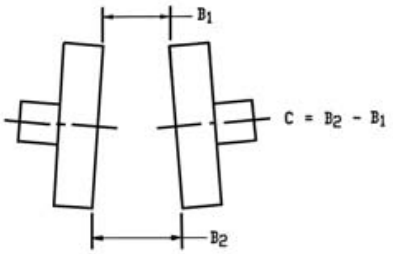

Figure 8

For the PX280, "C" is given as 1/16"

Actual Angular Alignment Measurements:
Taking these measurements at the OD of the 24-3/4" hub diameter per Figure 8, B2 is 2.295" (largest measurement) and B1 is 2.233 (smallest measurement.) The largest measurement was taken on the Washington side and the smallest measurement taken on the Oregon side. The measurement at the top was 2.264" and at the bottom the measurement was 2.263". Therefore C = 2.295 – 2.233 = 0.062"

Both the above checks give that the angular alignment is within Dodge recommendations.

Parallel offset: *If using a straight edge, check the parallel offset by laying the straight edge across the outside diameter of the flanges in four places 90° apart. The gap between the flange and straight edge should not exceed 1/32".*

Actual Parallel Offset Measurements:
Parallel offset was checked by performing T.I.R. measurements between the shafts. The T.I.R. found was 0.012". Offset is equal to ½ the runout, therefore 0.006"

The above readings give that the parallel offset is within Dodge recommendations.

Levelness:
The levelness check of the horizontal shafting line gives that the turbine shaft running uphill in the downstream direction at 0.0006"/ft. and that the gearbox input shaft is running in the same direction at 0.0009"/ft.

Conclusion:
Leffel engineering has reviewed all the data related to the shafting alignment of John Day S. Fish Unit 3 Turbine/Pump Gearbox and finds the alignment well within all expected limits and approves the same.

FORM A- Shaft Alignment

Date: 11-Feb-12 **Unit:** U3 S. Fish **Run:** Run 6, Final

DATA

IND #	A	B	C	D	A	DIST FROM IND #1 (ft)
1	25	27	28	28.5	25	0
2	50	52	52	50	50	7.42
3	50	52	52	48.5	50	11.29
4	50	58.5	56	42	50	28.48
5	50	59.5	56.5	41	50	31.1
6	50	61	56	39	50	38.44

CALCUALTION BLOCKS

	A	B	C	D	A
2 less1	25	25	24	21.5	25
3 less1	25	25	24	20	25
4 less1	25	31.5	28	13.5	25
5 less1	25	32.5	28.5	12.5	25
6 less1	25	34	28	10.5	25

RUN-OUT

	A - C	B - D	A - C
2 less 1	1	3.5	1
3 less 1	1	5	1
4 less 1	-3	18	-3
5 less 1	-3.5	20	-3.5
6 less 1	-3	23.5	-3

SJAFT CENTERLINE

	dist fr 1	a-c/2	b-d/2	a-c/2
1	0	0	0	0
2 less 1	7.42	0.5	1.75	0.5
3 less 1	11.29	0.5	2.5	0.5
4 less 1	28.48	-1.5	9	-1.5
5 less 1	31.1	-1.75	10	-1.75
6 less 1	38.44	-1.5	11.75	-1.5

Plumb Readings using a 2 sec grad level (0.00012"/12")

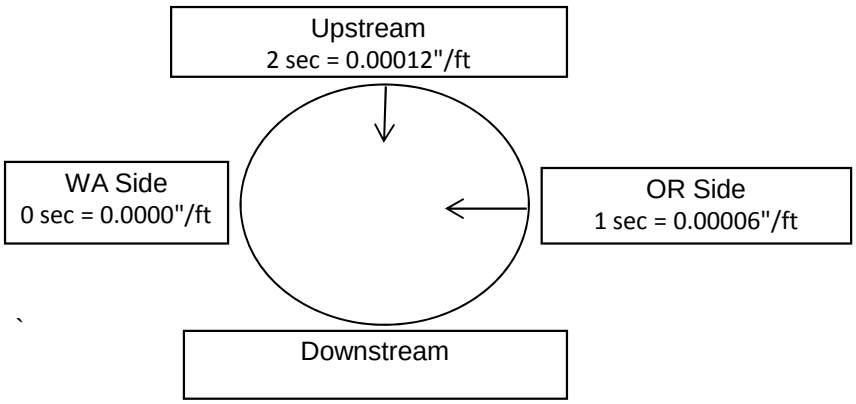

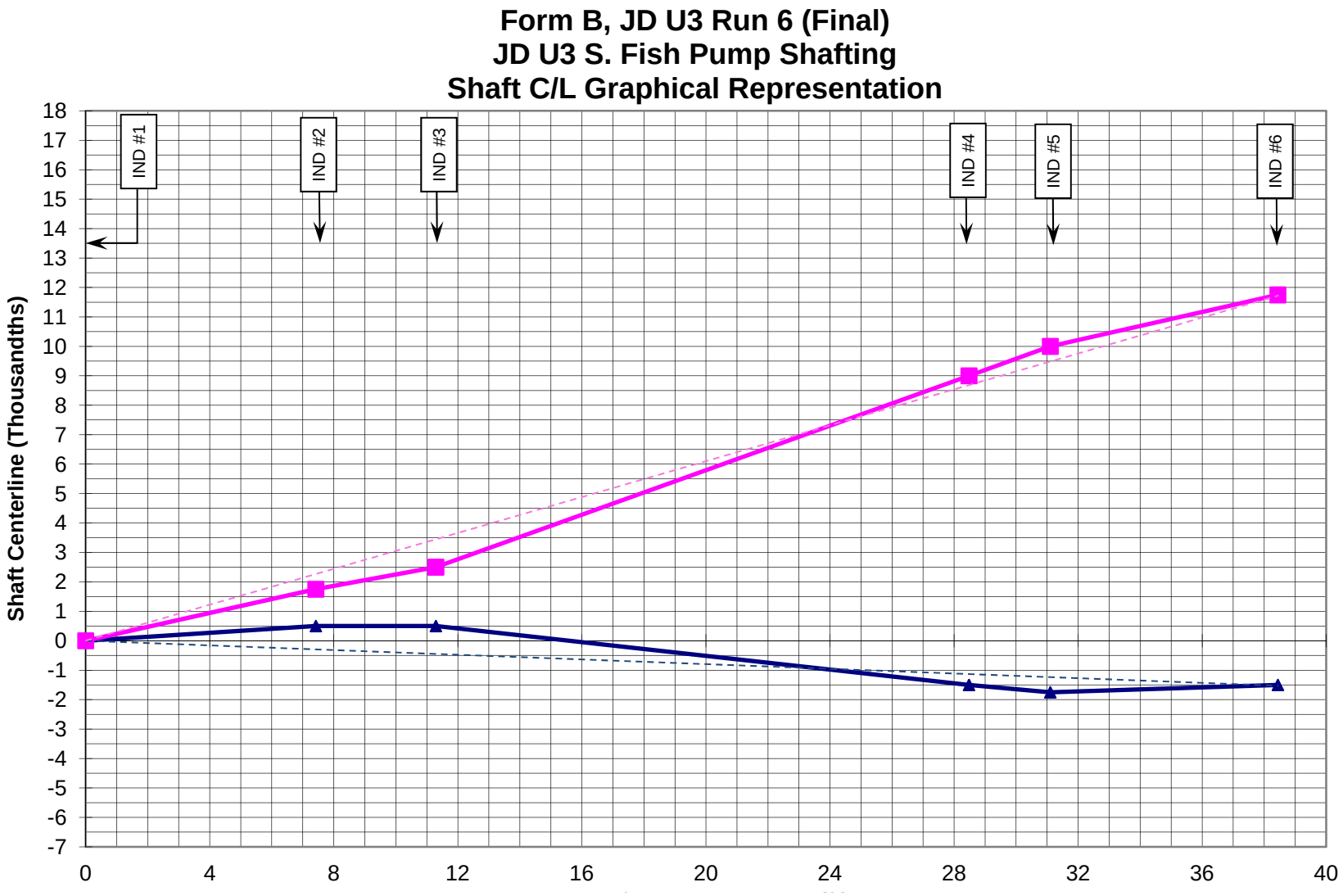
Form B, JD U3 Run 6 (Final)
JD U3 S. Fish Pump Shafting
Shaft C/L Graphical Representation
Shaft Centerline (Thousandths)
IND #1
IND #2
IND #3
IND #4
IND #5
IND #6
18
17
16
15
14
13
12
11
10
9
8
7
6
5
4
3
2
1
0
-1
-2
-3
-4
-5
-6
-7
0
4
8
12
16
20
24
28
32
36
40

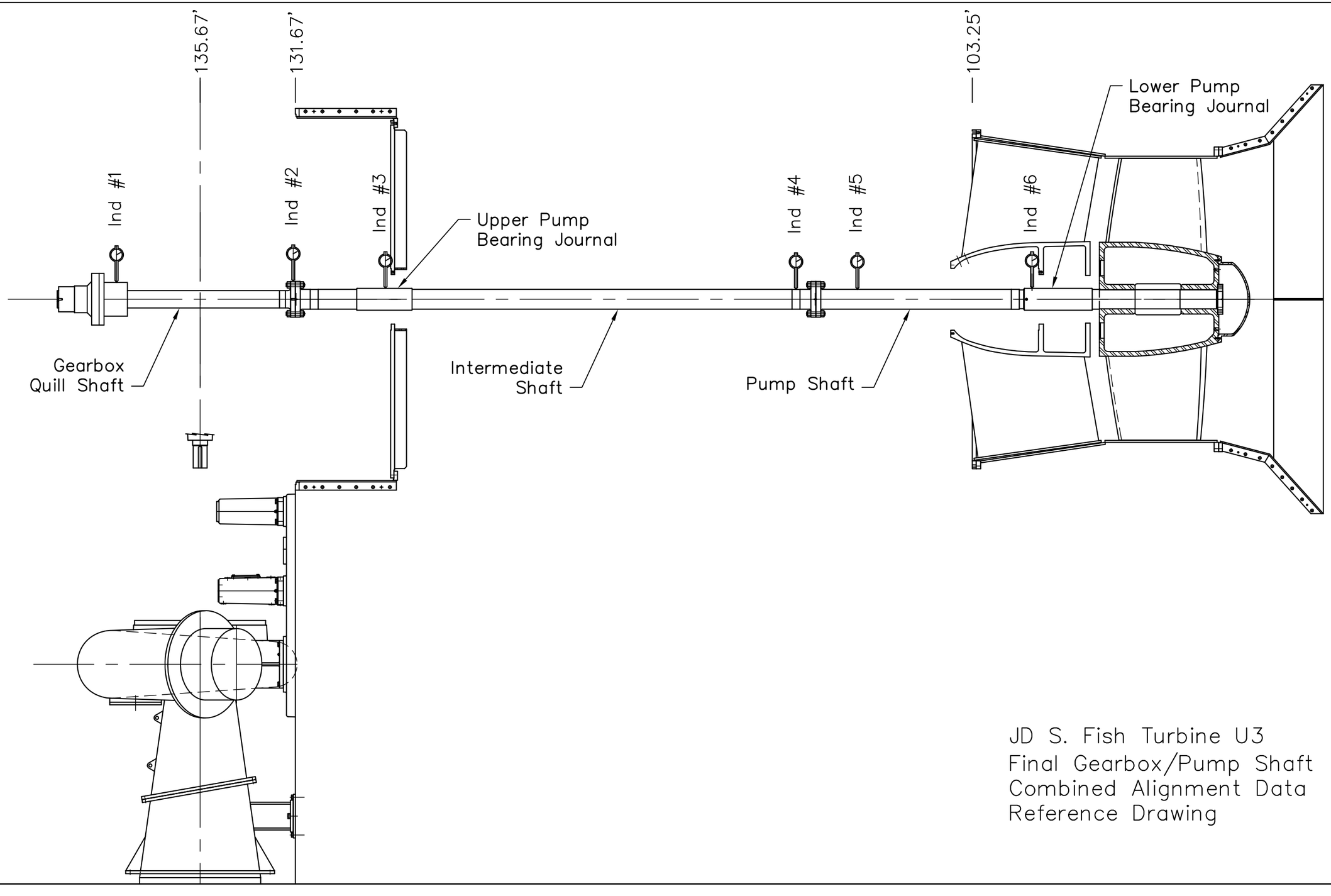

JD S. Fish Turbine U3
Final Gearbox/Pump Shaft
Combined Alignment Data
Reference Drawing

The James Leffel & Co

Contract: W9127N-10-C-0029
John Day Dam South Fish Turbine/Pump Rehab Project
Reassembly Dry Checks

WICKET GATE END CLEARANCE INSPECTION

UNIT: U#3 S. Fish DATE: 10-11-11 BY: Tyson Mundy
Jim Ward

While the wicket gates are in the squeeze-closed position, take measurements of the wicket gate top and bottom heal/toe clearances. Efforts should be made to measure at all gates, however depending on size and configuration of turbine it may not be possible, in such case enter “CNR”.

Remarks:

Orientation: Wicket Gate 17 is top dead center and the wicket gates are number clockwise looking down stream.

Total design end clearance is 0.015”

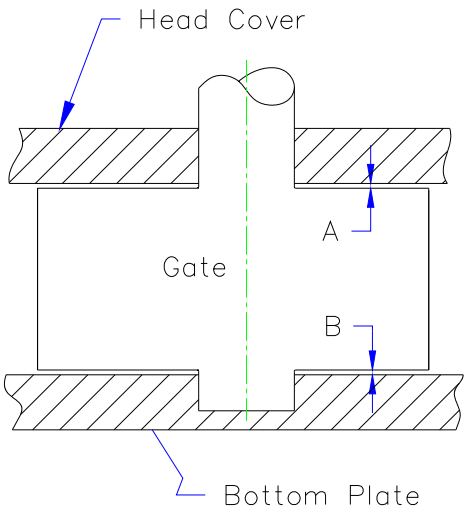

GATE	Heel A	Toe	Heel B	Toe	Comment
17	0.009	0.011	0.004	0.003	
18	0.006	0.007	0.005	0.007	
19	0.007	0.008	0.005	0.004	
20	0.008	0.009	0.006	0.005	
21	0.010	0.011	0.004	0.002	
22	0.007	0.008	0.006	0.005	
23	0.012	0.011	0.004	0.003	
24	0.010	0.007	0.004	0.006	
25	0.007	0.009	0.006	0.004	
26	0.008	0.007	0.005	0.007	
27	0.007	0.009	0.006	0.004	
28	0.006	0.005	0.007	0.006	
29	0.007	0.009	0.006	0.004	
30	0.010	0.011	0.004	0.003	
31	0.010	0.009	0.003	0.005	
32	0.009	0.011	0.005	0.004	

*CNR = Could not reach.

The James Leffel & Co.

Contract: W9127N-10-C-0029
John Day Dam South Fish Turbine/Pump Rehab Project
Reassembly Dry Checks

WICKET GATE CLOSURE (GAP) INSPECTION

UNIT: U# S. Fish DATE: 12-20-11 BY: Mark Kastenschmidt, JLC
John Wiseman, CQM, JLC

With gates in closed/squeezed condition, measure gate closure gaps between all gates. Measure two places, approximately 1" in from head cover and 1" in from bottom plate. Efforts should be made to measure at all gates, however depending on size and configuration of turbine it may not be possible, in such case enter "CNR".

Remarks:

Gap measurements were also taken midway along the wicket gate. These have been included on page 2 report.

Orientation: Wicket Gate 17 is top dead center and the wicket gates are number clockwise looking down stream.

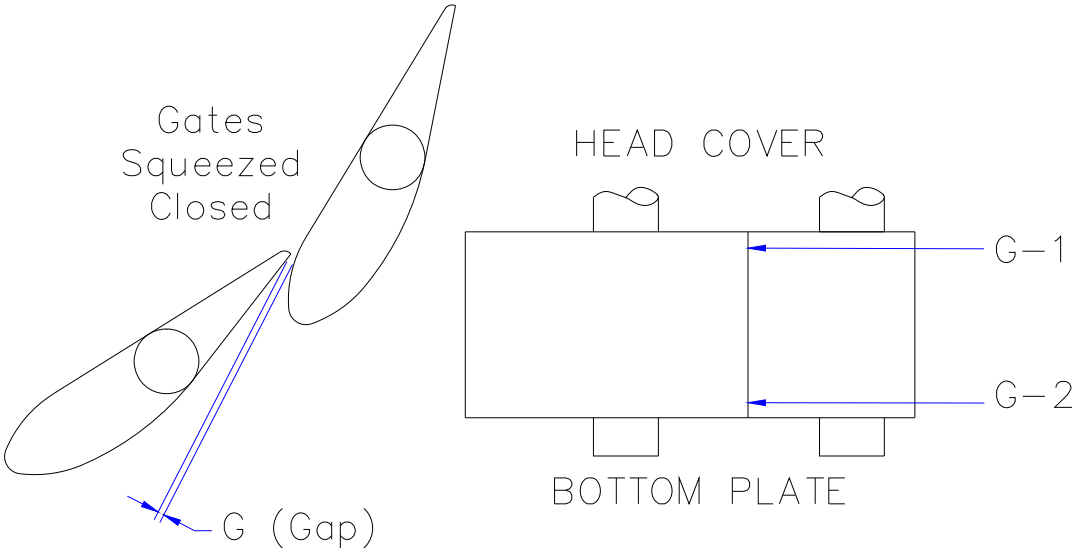

BETWEEN GATES	G-1	Midway	G-2	Comments
17-18	0.0015	<0.001	<0.001	
18-19	<0.001	0.002	<0.001	
19-20	<0.001	<0.001	<0.001	
20-21	<0.001	<0.001	<0.001	
21-22	<0.001	0.001	<0.001	
22-23	<0.001	<0.001	0.001	
23-24	<0.001	<0.001	<0.001	
24-25	<0.001	<0.001	<0.001	
25-26	<0.001	<0.001	<0.001	
26-27	<0.001	<0.001	<0.001	
27-28	<0.001	<0.001	<0.003	
28-29	<0.001	<0.001	<0.001	
29-30	0.0015	0.002	<0.002	
30-31	<0.001	<0.001	0.0015	
31-32	<0.001	<0.001	0.0015	
32-17	<0.001	<0.001	0.0015	

The James Leffel & Co.

Contract: W9127N-10-C-0029
John Day Dam South Fish Turbine/Pump Rehab Project
Reassembly Dry Checks

WICKET GATE OPENING INSPECTION

UNIT: S. Fish, U#3 DATE: 03-13-12 BY: Gerry Mashak, JLC
John Wiseman, CQM, JLC

With servo at zero stroke, measure full wicket gate openings. Efforts should be made to measure at all gates, however depending on size and configuration of turbine it may not be possible, in such case enter “CNR”.

Remarks:

Orientation: Wicket Gate 17 is top dead center and the wicket gates are number clockwise looking down stream.

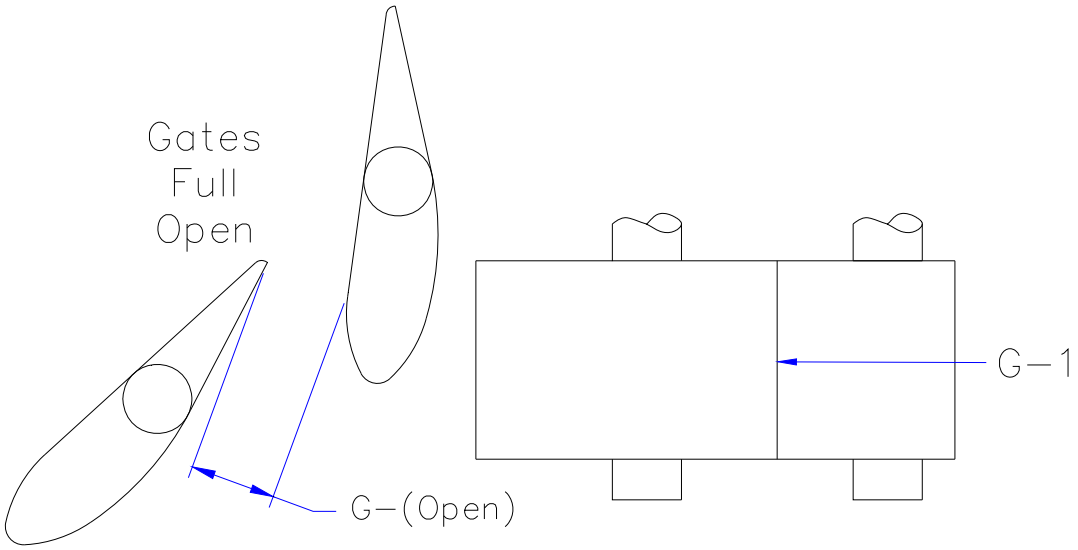

BETWEEN GATES	Opening	Comments
17-18	4”	
18-19	3-15/16”	
19-20	4”	
20-21	3-15/16”	
21-22	4”	
22-23	3-15/16”	
23-24	4”	
24-25	3-15/16”	
25-26	CNR	
26-27	CNR	
27-28	CNR	
28-29	CNR	
29-30	CNR	
30-31	CNR	
31-32	4”	
32-17	3-15/16”	

*CNR= Could not reach

The James Leffel & Co.

Contract: W9127N-10-C-0029
John Day Dam South Fish Turbine/Pump Rehab
Reassembly Dry Checks

WICKET GATE SPACE (DISTRIBUTOR HEIGHT)

UNIT: S. Fish U3 DATE: 10-11-11 BY: Tyson Mundy
Jim Ward

Requirement
Determine wicket gate space (distributor height) by measuring the distance between head cover and bottom plate. Efforts should be made to measure at all gates, however depending on size and configuration of turbine it may not be possible, in such case enter "CNR".

Instructions
Using inside micrometers (or other acceptable device)

Remarks:

Orientation: Wicket Gate 17 is top dead center and the wicket gates are number clockwise looking down stream.

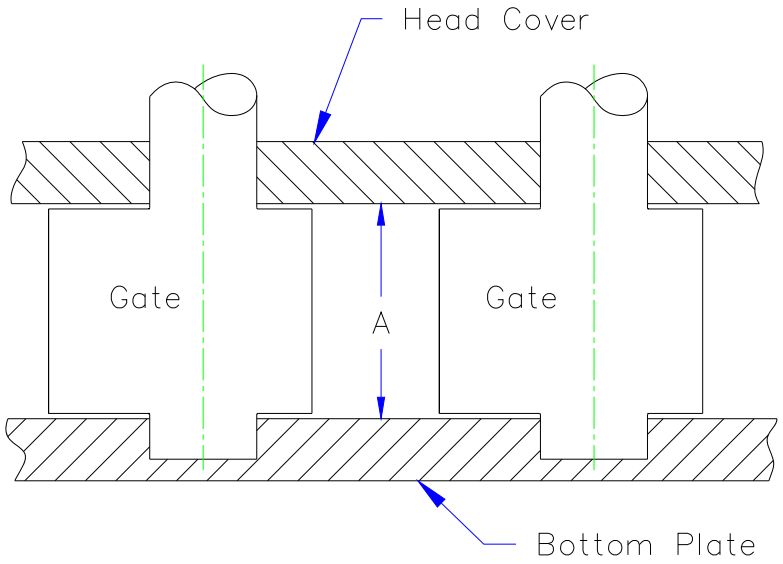

BEWTEEN GATES	A	Comments
17-18	11.501	
18-19	11.500	
19-20	11.501	
20-21	11500	
21-22	11.500	
22-23	11.501	
23-24	11.500	
24-25	11.499	
25-26	11.498	
26-27	11.500	
27-28	11.501	
28-29	11.500	
29-30	11.499	
30-31	11.500	
31-32	11.501	
32-17	11.500	

*CNR = Could not reach.

Contract: W9127N-10-C-0029
John Day Dam South Fish Turbine/Pump Rehab Project
Reassembly Dry Checks

WICKET GATE OPENING VERSUS SERVO MOTOR STROKE

UNIT: S. Fish U3 DATE: 03-13-12 BY: Gerry Mashak, JLC
John Wiseman, CQM, JLC

Requirement
Determine the wicket gate opening (in inches and percentage of total opening) vs. servomotor stroke (in inches and percent of total servomotor travel) for squeeze, 0 to 100% in 10% increments and at full gate. Stroke should not include squeezes. Determine the amount of squeeze.

Instructions

1.) **Determining the amount of squeeze the servomotor places on the gates**
   a. Place the wicket gates in squeeze.
   b. Set indicator zeroed out on governor terminal lever inline with piston rod.
   c. Release the squeeze on the gates.
   d. Read the travel on the indicator and record below.
   e. Determined amount of squeeze: **0.066”**
      i. Servomotor stroke (inches) at Zero Gate equals the amount of determined squeeze, enter this amount in column “A” for Zero Gate

2.) Determine total servomotor stroke (from Zero Gate)
   a. Open servomotor to full open (end of stroke)
      i. Measure linear travel of servomotor from point of Zero Gate
         1. Enter this distance in column “A” for 100% (Full Gate)
      ii. Using an agreed upon location, enter Full Stroke minus Squeeze amount for zero gate in column “C” for Zero Gate. This location shall be measured for the remaining Opening vs. Stroke measurements.

3.) Determine opening vs. stroke for remaining increments
   a. Close servomotor 10% of stroke.
      i. Measure gate opening and record in column “C” for 90%
   b. Repeat above for every 10% increment to 10%

4.) Calculate percentages, column “B” and “D” on page 2

	A	B	C	D	E
Stroke Increment (Gov. Cabinet)	Servo Stroke (inches, less squeeze)	Servo Stroke % (A / Total stroke x 100%)	Gate Opening (inches)	Gate Opening % (C / Full gate x 100%)	Scale Pointer Reading
Total Stroke & Zero Gate 99.5%	11-7/8”	100%	0”	0%	0
90%	10-11/16”	90%	3/8”	9.5%	10
80%	9-1/2"	80%	23/32”	16.5%	20
70%	8-5/16”	70%	1-1/16”	26.7%	30
60%	7-1/8”	60%	1-7/16”	36.2%	40
50%	5-15/16”	50%	1-15/16”	48.8%	50
40%	4-3/4”	40%	2-5/16”	58.3%	60
30%	3-9/16”	30%	2-3/4”	69.3%	70
20%	2-3/8”	20%	3-1/8”	78.8%	80
10%	1-3/16”	10%	3-1/2”	88.2%	90
0% (Full Gate)	0”	0%	4”	101%	100

Remarks:

Opening between gates 17 and 18 were used for these measurements. The design WG Opening is 3-27/32”. The average WG Opening found at 0% stroke was 3-31/32”. This average is used for calculation in Column “D”.

The James Leffel & Co.

Contract: W9127N-10-C-0029
John Day Dam South Fish Turbine/Pump Rehab Project
Reassembly Dry Checks

FRONT AND REAR RUNNER SEAL RING CLEARANCES

UNIT: U3 S. Fish DATE: 02-27-12 BY: Mark Kastenschmidt, JLC
John Wiseman, JLC, CQM

Measure the clearance between the Runner Band/Bottom Plate and Runner Crown/Head Cover

1.) Take measurements 0°, 90°, 180°, & 270° using feeler gauges

Location	0 Deg (Top)	90 Deg (Gate Shaft Side)	180 Deg (Bottom)	270 Deg (Inlet Side)
Front Seal	0.020”	0.019”	0.019”	0.019”
Rear Seal	0.020”	0.019”	0.018”	0.019”

Remarks:

The design radial clearance is 0.020”.

The above readings indicates the concentricity of the front static seal to the front dynamic seal is 0.0005”

The above readings indicates the concentricity of the rear static seal to the rear dynamic seal is 0.001"

The James Leffel & Co.

Contract: W9127N-10-C-0029
John Day Dam South Fish Turbine/Pump Rehab Project
Reassembly Dry Checks

PROPELLER BLADE TIP CLEARANCES

UNIT: #3 S. Fish DATE: 16FEB12 BY: Mark Kastenschmidt, JLC
John Wiseman, JLC

After final alignment and prior to installation of diffuser extension cone, stake pump shaft in center of the lower pump bearing bearings and take blade tip clearance measurements.

O DEG: Measure the clearance between the Propeller Blade Tip Diameter and the Casing Inner Diameter. Measure 3 places each blade with blades straddling U.S./D.S. centerline.
90 DEG: Rotate propeller 90, 180, 270 degrees CCW and repeat measurements.
(See Sheet2 sketch)

Location	"A"	"B"	"C"	"D"	"E"	"F"
0 DEG	0.178	0.183	0153	0.178	0.163	0.133
90 DEG CCW	0.145	0.163	0.178	0.148	0.158	0.152
180 DEG CCW	0.173	0.166	0.153	0.178	0.186	0.133
270 DEG CCW	0.138	0.158	0.175	0.151	0.159	0.160

Remarks:

The design clearance was 0.125". From measurements taken of the casing at disassembly it was found that the casing was out of round (or worn) in the range of 0.08" (submittal 48 13 13.12 26 Item 11). The above measurements give that the radial clearances ranges from 0.133" to 0.186". The variance is in line with the out of round condition and the variance in application of new paint an both the propeller and casing needs considered. Further, due to the method of checking these clearances (rotation) the results support that the propeller blade tip diameter is round and the casing is out of round.

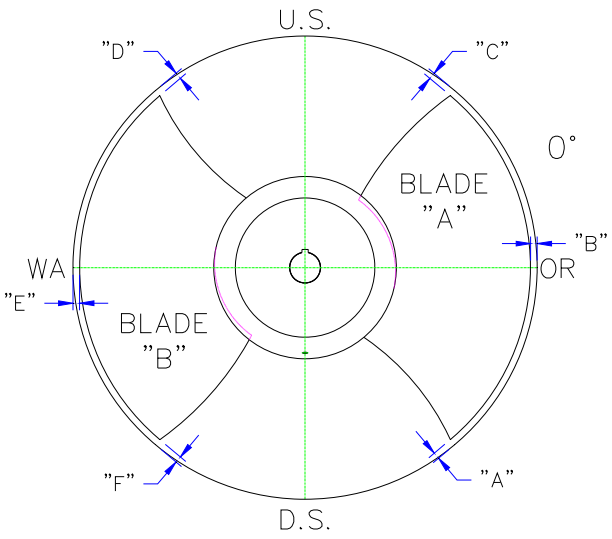
U.S.
"D"
"C"
0°
BLADE
"A"
"B"
WA
OR
"E"
BLADE
"B"
"F"
"A"
D.S.

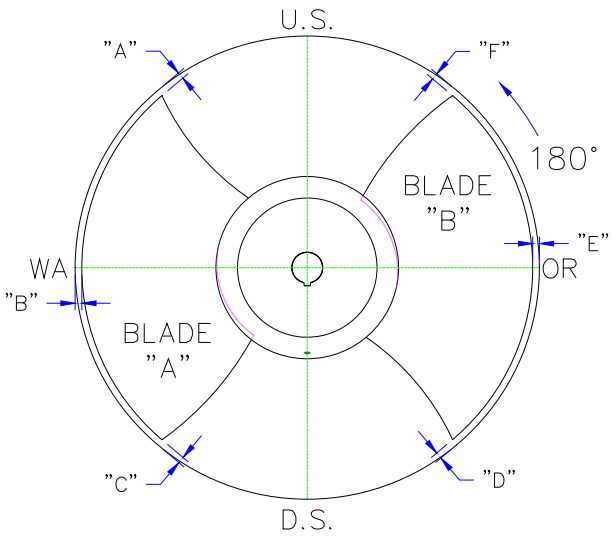
U.S.
"A"
"F"
180°
BLADE
"B"
"E"
WA
OR
"B"
BLADE
"A"
"C"
"D"
D.S.

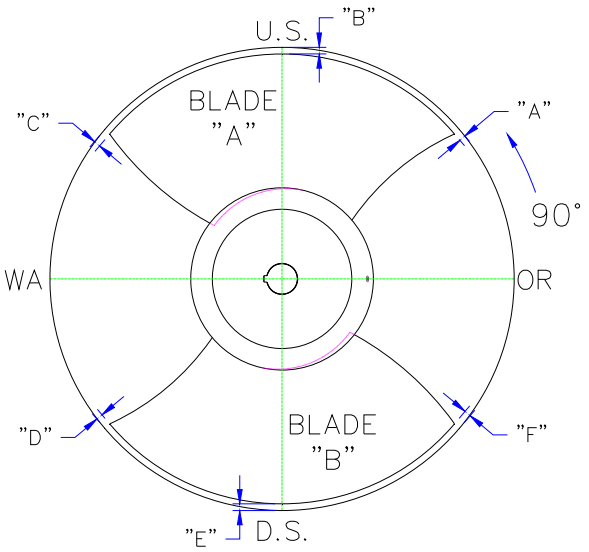
U.S.
"B"
"C"
BLADE
"A"
"A"
90°
WA
OR
"D"
BLADE
"B"
"F"
"E"
D.S.

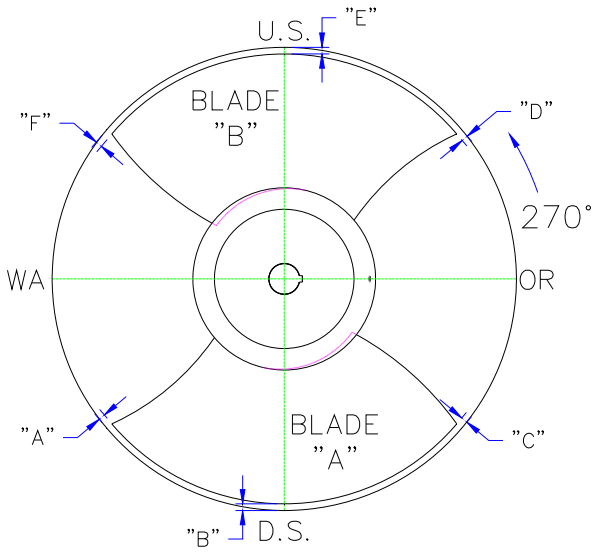
U.S.
"E"
"F"
BLADE
"B"
"D"
270°
WA
OR
"A"
BLADE
"A"
"C"
"B"
D.S.

The James Leffel & Co.

Contract: W9127N-10-C-0029
John Day Dam South Fish Turbine/Pump Rehab Project

PUMP COULPING HOLES-BOLTS SIZING

UNIT: 3

FINAL
2-8-2012
J. WISEMAN

Measure the final diameter of the field reamed pump shafting coupling holes to the nearest 0.0001". Record the diameter of the coupling bolt installed.

Gearbox to Extension Shaft	MIN/MAX Hole Size	Measured by	Date	2-6-2012 Bolt Diameter
Hole 1	1.8454 1.8456	JOHN WISEMAN	1-21-2012	1.8445
Hole 2	1.8459 1.8459			1.8451
Hole 3	1.8461 1.8463			1.8452
Hole 4	1.8460 1.8467			1.8458
Hole 5	1.8465 1.8466			1.8455
Hole 6	1.8463 1.8463			1.8453
Hole 7	1.8459 1.8460			1.8450
Hole 8	1.8475 1.8473			1.8465
Hole 9	1.8451 1.8451			1.8440
Hole 10	1.8453 1.8455	↓	↓	1.8442
Extension Shaft to Pump Shaft	MIN/MAX Hole Size	Measured by	Date	Bolt Diameter
Hole 1	1.8480 1.8480	JOHN WISEMAN	1-4-2012	1.8475
Hole 2	1.8456 1.8456			1.8446
Hole 3	1.8458 1.8457			1.8452
Hole 4	1.8457 1.8457			1.8451
Hole 5	1.8459 1.8463			1.8453
Hole 6	1.8470 1.8470			1.8464
Hole 7	1.8462 1.8460			1.8454
Hole 8	1.8469 1.8468			1.8464
Hole 9	1.8525 1.8523			1.8516
Hole 10	1.8462 1.8459	↓	↓	1.8454

The James Leffel & Co.

Contract: W9127N-10-C-0029
John Day Dam South Fish Turbine/Pump Rehab Project
Reassembly Dry Checks

PUMP BEARINGS to SHAFT CLEARANCES

UNIT: S. Fish U3 DATE: 02-22-12 BY: Mark Kastenschmidt, JLC
John Wiseman, CQM, JLC

Upper and Lower Pump Bearing to Pump/Extension Shaft clearances. Measure clearances 4 place @90 degrees apart. Swing method may be used to determine clearances in lower bearing, with upper bearing removed.

LOWER BEARING	
U.S.	0.006
WA Side	0.006
D.S.	0.006
OR Side	0.006
Above Lower Bearing Clearances Taken by the Swing Method.	
UPPER BEARING	Through
U.S.	0.009
WA Side	0.006
D.S.	0.008
OR Side	0.007

The James Leffel & Co.

Contract: W9127N-10-C-0029
John Day Dam South Fish Turbine/Pump Rehab Project
Reassembly Dry Checks

TURBINE BEARINGS to SHAFT CLEARANCES

UNIT: 3 DATE: 2-22-12 BY: MARK K. JOHNW.

Inboard and Outboard Turbine Bearing to Turbine Shaft clearances. Measure 4 places @90 degrees apart at each end of bearings.

INBOARD BEARING	Turbine End	Gearbox End
TOP	.008	.008
WA Side	.0035	.0035
BOTTOM.	0	0
OR Side	.0035	.0035
Thrust Clearance	DIAL INDICATOR .020 MOVEMENT	DIAL INDICATOR .020 MOVEMENT
OUTBOARD BEARING	Turbine End	Gearbox End
TOP	.007	.007
WA Side	.0035	.0035
BOTTOM	0	0
OR Side	.0035	.0035

THE JAMES LEFFEL & CO.

Manufactures of

HYDRAULIC TURBINES

1978 Commerce Circle—Springfield, Ohio USA 45504-2012

Phone (937) 322-0116 Telefax (937) 322-0467

SECTION 9

THE JAMES LEFFEL & CO.

Manufactures of

HYDRAULIC TURBINES

1978 Commerce Circle—Springfield, Ohio USA 45504-2012

Phone (937) 322-0116 Telefax (937) 322-0467

SECTION 9

ORIGINAL O & M MANUALS

The following is provided in this section:

Leffel Original Turbine O & M..... 12 pages

Worthington Original Pump O & M.....24 pages

The following original O & M's have been marked up to the extent possible to provide the variations brought on by this refurbishment. The only real change is that the turbine wicket gate mechanism and pump shaft bearings grease lubrication has been abandoned. Otherwise, these original manuals and this O & M provide the needed information concerning operation and maintenance of the turbine and pump.

Note:
As the gearbox for this unit was refurbished under separate contract, its O & M is not provided here.

-- OUR 105th ANNIVERSARY YEAR --

THE JAMES LEFFEL & Co.

MANUFACTURERS OF

HYDRAULIC TURBINES

SCOTCH BOILERS - STOKERS

SPRINGFIELD, OHIO, U.S.A.

CABLE ADDRESS:
"LEFFEL SPRINGFIELD, OHIO"

ESTABLISHED
1862

ALL CONTRACTS AND AGREEMENTS ARE CONTINGENT UPON STRIKES, ACCIDENTS OR OTHER CAUSES BEYOND OUR CONTROL, AND SUBJECT TO APPROVAL AT THE HOME OFFICE AT SPRINGFIELD, OHIO.
ALL QUOTATIONS F.O.B. FACTORY, SPRINGFIELD, OHIO, UNLESS OTHERWISE STATED, AND ARE FOR PROMPT ACCEPTANCE ONLY
ALL RIGHTS RESERVED TO CORRECT ERRORS ON QUOTATIONS OR ANY OTHER MATTER HEREIN.

December 20, 1966

OPERATION AND MAINTENANCE INSTRUCTIONS

U. S. ARMY ENGINEER DISTRICT, WALLA WALLA

CORPS OF ENGINEERS

BUILDING 602, CITY-COUNTY AIRPORT
WALLA WALLA, WASHINGTON

FOR

FISHWATER TURBINES - JOHN DAY LOCK AND DAM

COLUMBIA RIVER WASHINGTON AND OREGON

LEFFEL ORDER W-3036

CORPS OF ENGINEERS CONTRACT

DA-45-165-CIVENG-63-391

REFERENCE DRAWINGS

GENERAL ARRANGEMENT DRAWING	51244, REV. 1
ASSEMBLY SECTION DRAWING	50596
END VIEW ASSEMBLY DRAWING	50792, REV. 1
WATER PIPING DRAWING (TURBINE BEARING)	50712
COMPOSIT PIPING DRAWING (FARVAL-GOVERNOR-WATER)	51354
OIL PIPING DRAWING	51701
WIRING DIAGRAM DRAWING	51245, REV. 1
SERVO-MOTOR ASSEMBLY	50801, REV. 1
WRENCHES & WRENCH BOARD DRAWING	51253

TABLE OF CONTENTS

SECTION I		PAGE
	A. General Description.	1
	B. Runner Shaft and Extension	1
	C. Turbine Shaft Alignment.	1
SECTION II		
	Turbine Bearing	2
	Thrust and Radial Bearing	2 & 3
	Lubrication	3
SECTION III		
	Operating Procedure	4 & 5
SECTION IV		
	Maintenance Procedures.	5,6,7,8
SECTION V		
	Gate Mechanism.	9
SECTION VI		
	Packing Box	9
SECTION VII		
	Wrenches - Special Tools.	9 & 10
SECTION VIII		
	Turbine Performance Characteristics	10
SECTION IX		
	Supplemental Data	10

SECTION I

A. GENERAL DESCRIPTION

This order covers three (3) horizontal turbines furnished on U. S. Engineer Contract DA-45-165-CIVENG-63-391. Included in this set of instructions are these drawings listed on the front page which will be referred to and which we believe, will provide data needed.

B. RUNNER SHAFT AND EXTENSION

The runner shaft is solid forged steel and is accurately machine finished all over. The connection between the runner and the shaft coupling is by means of stud bolts set in top of the runner hub. Shaft is attached to pump be means of a flexible coupling furnished by Worthington Corporation.

C. TURBINE SHAFT ALIGNMENT

The pump shall be so installed that when connected to the turbine shaft the two components must be concentric about a given unit center. It is necessary that runner hub and band clearance be maintained in the stationary cover and bottom ring, also clearance of shaft sleeve in the packing box. This alignment must be checked with shaft laying central in radial bearings and with spiral case and bearings secured in place.

There shall be radial clearance of .020" between the runner and the head cover. There shall be also a total clearance of .008" between the turbine guide bearing and shaft.

NOTE: Leffel installed and aligned the pumps, turbine, and gearboxes following their own procedures. These procedures are provided in the Installation Data section of the O & M.

SECTION II

A. TURBINE BEARING

The outboard turbine is equipped with a babbitt lined outboard bearing, having a separate barrel, which can be replaced. The bearing is ring oiling with an oil reservoir below and with the oil rings dipping into the oil. The rotation of the shaft carries the oil by the oil rings up to the top of the bearing and is conducted to a groove in the babbitt from which it feeds the bearing.

The oil is cooled from cooling compartment around the oil reservoir. Cooling water is piped to the cooling compartment as shown on Water Piping Drawing 50712.

The oil used in this bearing would be a good turbine oil of SAE 20 characteristics and approximately 2 gallons of oil are required to completely fill the system.

The oil level gauge is mounted on the bearing housing. Low oil level is approximately 2" below full oil level. Temperature relay and bulb type thermometer is also provided with the bearing.

B. THRUST AND RADIAL BEARING

The inboard bearing consists of a babbitt lined guide bearing and inthe same housing a Kingsbury adjustable shoe oil lubricated thrust bearing. Clearance in the babbitted bearing is .008" total. Bulb type thermometer and thermo relay is provided for this guide bearing and thermo relayprovided for the thrust bearing.

For the lubrication of this combination bearing oil (SAE 20) is received from the reservoir in the bearing pedestal. It is pumped through an Andale Cooler and delivered to both the thrust bearing and guide bearing. Oil sight gauge is provided for the reservoir which reservoir has a capacity of 25 gallons. There is a relief valve in the oil pressure line and the unit is further protected by a sediment strainer.

The cooling system is protected with a Barton Model 258 flow meter and bulletin covering this is provided, and also a sediment strainer. Bulletins are provided covering the Kingsbury Thrust Bearing and Andale Cooler. Refer Drawing 50712 for water piping and Drawing 51701 for oil piping.

C. LUBRICATION

~~All turbine parts that move and which must be greased are lubricated by the Automatic Farval Lubricating System and information on this is covered in the separate folders on the Farval equipment. This is a time clock control system and is adjustable.~~

~~This system was set up so as to provide the lubrication blocks and valves with the proper amount of grease. A number of fittings and out in the open, that move but slightly, require considerably less grease than those at the gate stems and as stated the system is adjustable so if it is desired to change the quantity of grease to any of the fittings this can be done.~~

SECTION III

OPERATING PROCEDURE

There is a pipe connected to the front cover head of the turbine for admitting air to the center of the runner. Air can be admitted at all times by means of the stop cock and check valve and piping connected to the front cover head.

The purpose is for admission of air into the draft tube immediately below the runner to smooth out operation of the unit and break up disturbance especially at part load. The stop cock above mentioned is manually and permanently set. The stop cock opening is set after the turbine is placed in operation and is adjusted to the smoothest performance of the unit.

A check should be made of the full gate travel as shown on Servomotor Drawing 50801, Rev. 1.

The packing box is provided with connection for water lubrication and a lantern ring is furnished for water distribution.

Before starting or operating the turbine, it is necessary to carefully read Woodward bulletin 14044, "Turbine Unit Control" and bulletin 10004, "Screw Type Pumping Unit". Also, all connections of the Woodward turbine unit controls, oil pumping unit and pipe connections should be checked.

The Leffel turbine is used for operation of a Worthington pump and before the turbine is operated it is necessary to read carefully Worthington instructions covering the pump operation.

To place the turbine in service after it has been shut down and the main valve closed the procedure would be as follows:

(1) Make sure that the turbine gates are closed, by noting the position of the indicator on the governor gate position pointer.

(2) Open the main valve and allow the spiral case to fill with water.

(3) Note the oil level on the gauge for the main bearings. Turn the cooling water to the inboard bearing and packing box.

(4) Set Farval lubricating system in operation.

(5) The unit is now ready to start. Refer to Woodward and Worthington instructions.

To open the turbine gates the gate limit pointer on the governor control unit should be turned slightly towards the full open position so that oil will be delivered into the servo-motor which controls the turbine gates and partially open them to let the turbine start operating.

To stop the turbine gate limit pointer should be moved to the closed position and in that way the turbine gates will be closed by the oil pressure in the servo-motor.

SECTION IV

MAINTENANCE PROCEDURES

~~Description has been given to the lubrication of the moving parts of the turbine through the automatic Farval system and this is further covered by the Farval bulletins.~~

Description has been given relative to the bearing oil in the turbine bearings and the method of lubrication the bearings. The oil should be checked at intervals of each month to ascertain whether the oil is dirty or is in need or replacement and it is desired that the oil be clean and since there is no heat involved the oil should maintain its good condition over a long period of time.

The oil can be drawn out of the bearings readily and inspected. Inspections should be made on the turbine gate operating parts at regular intervals of at least once a month and ascertain whether the lubrication is being properly applied and whether the lubrication is sufficient or in too great a quantity in which case adjustments can be made in valves. The various bolts and nuts holding the equipment in place should be checked to see that they are tight.

The turbine control equipment should be inspected at least once a month to ascertain that there are no oil leaks.

Make sure whenever dismantling or disassembling any parts that there is adequate match markings to assure reassembly in the same orientation.

In dismantling of the turbine unit the first step would be to disconnect turbine from the pump at flexible coupling. Drain oil from bearing reservoirs and disconnect water piping, oil piping, and Farval lubrication connections. Make sure all parts are match marked. Remove top half of inboard bearing being careful about the split Kingsbury thrust bearing. Remove packing box.

Remove top half of outboard bearing. Block up under the turbine shaft and remove thrust bearing oil reservoir pedestal then the lower half thrust bearing. Next, remove the beveled draft tube section. The turbine runner and shaft are removed from the discharge side of the spiral case.

Move runner with shaft into space where beveled draft tube section was removed. Remove runner from shaft, then runner and shaft can be individually taken out.

The gate operating mechanism may now be removed. Note keeper screws in the spiral case must be removed to release the gate ring. The front cover head may now be removed and jack screws are provided for removal from dowel. The gates may now be removed, it being noted that they are match marked.

Reassembly should follow the reverse operation used in the turbine disassembly concentric clearance must be maintained at all rotating parts.

All finished surfaces should be carefully cleaned before reassembly and any previously used sealing compounds should be scraped off.

When placing the packing box in place the joint faces should be cleaned and sealed with a light coat of white lead and oil so that they will form a water tight joint.

After the turbine parts have been reassembled, the gates should be adjusted if needed and check should be made with the turbine control closing the turbine gates to see that the points of contact of the gates at the closing location forms a tight seal and

if any small adjustment is needed this can be taken care of on the individual gates by means of the eccentric pin that is located in the gate operating ring which pin being loosened can then be rotated to tighten the gate so that it is closely in contact with the adjacent gate and then the locking nut on the eccentric gate ring pin again tightened to hold the gate in its reference position.

The junction at the finished surfaces with gates in closed position should be about .002", however, erosion will cause wear which can not be taken up by adjusting the eccentric pins thereby giving more leakage. This leakage will make it more difficult to stoppthe rotation at closed position. An excess of clearance at top and bottom of gate would be .060" total and .030" at vertical junctions.

In placing packing in the packing box each individual ring should be carefully located in the packing box and the lantern ring installed in its position and then the additional rings of packing fitted in place. The packing, therefore, should be cut to the required length to fit around the shaft so that the ends butt together smoothly and ewenly.

In tightening the gland on the packing box this should be a very light wrench fit so as to not to put unnecessary strain or tightness in the packing, because some water should seep through the packing at all times to keep it moist.

After assembling the bearing be sure that ample oil is placed in the housing for proper lubrication.

SECTION V

GATE MECHANISM

The gate mechanisms between the gate operating ring and the individual gates consists of the lever and breaking links. Under normal operation the links are amply heavy to cause the gates to open and close as normally. Broken links must be promptly replaced and a check made to remove any foreign material from the gate case that may have caused the breakage.

SECTION VI

PACKING BOX

The packing box on the main turbine shaft should be inspected at regular intervals, there should always be a small amount of water seeping out through the top of the packing box so as to keep the packing moist and, therefore, the packing should not be drawn down too tightly, otherwise, it will cut off the supply of water and will cause the packing to burn.

The packing box has a water pipe connection through which a small quantity of water can be admitted so as to keep the packing moist. The quantity of water should be controlled by the valving in the pipe line so as to permit just sufficient water to pass through so as to keep the packing moist with a small amount of water escaping throught the top of the packing box. A seepage flow of 1/2 to 1 gallon of water per hour is adequate.

SECTION VII

WRENCHES-SPECIAL TOOLS

Refer to detailed Drawing 51253 (included) for listing of various

wrenches and/or tools for maintenance of turbine parts.

SECTION VIII

TURBINE PERFORMANCE CHARACTERISTICS

Included is curve sheets no. 2577 and 2578 showing the performance characteristics of the turbine. The turbine runner is of the reaction - Francis type.

SECTION IX

SUPPLEMENTAL DATA

There is a separate folder covering the various auxiliary devices that were furnished as part of this turbine equipment. Should any occasion require writing us about the units supplied on this order, kindly refer to our shop order W-3036

THE JAMES LEFFEL & COMPANY

ENGINEERING DEPARTMENT

INSTRUCTIONS FOR INSTALLATION, OPERATION AND MAINTENANCE OF 174" VERTICAL PROPELLER PUMP FOR U.S. ARMY ENGINEERS, NEW ENGLAND DIV. (JOHN DAY LOCK AND DAM)

Customer's Order	DA-45-164-CIVENG-63-391
Sales Office Order	190-30825
Worthington Order	P-440236-9

Pat (201) 484-1234

FOREWORD

Worthington products are the result of more than a century of progressive study and development. Advanced design, proper selection of materials, and precision construction reflect this wide experience. Worthington products will give trouble-free efficient operation with minimum maintenance and repair.

This instruction book will familiarize management and operating personnel with pertinent details and proper procedures for the installation, operation, and maintenance of one of these products.

Designate below your identification of the equipment for which this book applies.

Unit Size	Identification Number

WARNING

Do not operate this equipment in excess of its rated capacity, speed, pressure and temperature, nor otherwise than in accordance with the instructions contained in this manual. Its operation in excess of these conditions will subject it to stresses and strains which it was not designed to withstand.

Failure to heed this warning may result in an accident causing personal injury.

The descriptions and instructions included in this book cover the standard design of the equipment and any common deviations when possible. This book does not cover all design details and variations nor does it provide for every possible contingency which may be encountered. When information cannot be found in this book, contact the nearest Worthington Sales Office.

TABLE OF CONTENTS

SECTION		PAGE
I	INTRODUCTION AND GENERAL DESCRIPTION	
	Shafting and Sleeves	1
	Propeller	1
	Diffuser and Diffuser Extension Cone	1
	Suction Bell	2
	Bearings	2
	Stuffing Box	2
	Couplings	2
II	PRE-INSTALLATION	
	Inspection of Equipment	3
	Storage	3
	Cleaning Prior to Installation	3
	Final Preparation Prior to Installation	3
III	INSTALLATION	
	Location of Equipment	4
	Sole Plates	4
	Alignment	4
	Piping	8
IV	OPERATION	
	Starting and Operating Pumps	10
	Stopping Pumps	10
V	LUBRICATION	11
VI	MAINTENANCE	
	Inspections	12
	Dismantling Procedure	12
	Inspection of Parts After Dismantling	
	Diffusers	14
	Shaft and Shaft Sleeves	14
	Bearings	14
	Assembling	14
	Packing	15
	Locating Troubles	15

TABLE OF CONTENTS (CONT'D.)

SECTION		PAGE
VII	SERVICE PARTS AND PARTS LIST	
	Service Parts	17
	How to Order Service Parts	18
	Returning Parts	18

GENERAL DATA

Worthington Order No.	Size & Type of Pumps	Total No. of Pumps	Pump Ser.No.
P-440236	174" Vert. Propeller	3	1600054 to 1600056

Elevation - RW-136347
Sectional Assembly - SL-11589

Running Clearances

	Design Radial
Shaft Sleeve vs. Bearing Bushing - Lower	0.007"-0.008"
Shaft Sleeve vs. Bearing Bushing - Upper	0.007"-0.008"
Propeller vs. Casing	1/8"

Pertinent Pump Data

Packing Size & Type	Pump Line Bearings Type
1" Sq. ~~Teflon Asbestos~~ PTFE/Graphite (Upper Bearing)	~~Bronze Sleeve~~

SECTION 1

INTRODUCTION AND GENERAL DESCRIPTION

The Worthington 174" Propeller pump is designed for wet pit operation. The flow of liquid passes axially up through the propeller and is discharged through the discharge opening.

The pump is rigidly coupled to a right angle gear drive which in turn is coupled to a horizontal turbine.

For general arrangement refer to elevation drawing RW-136347 and sectional assembly SL-11589.

SHAFTING AND SLEEVES

The vertical shafting is in two sections for practical reasons and to permit ease of assembly or dismantling.

The shafting is protected at the bearings by sleeves. The upper sleeve is welded on the shaft while the lower sleeve is pressed on and is held from turning by a set screw.

PROPELLER

The propeller is of the axial flow type. It is keyed to the shaft and held in position by a propeller nut. A lock screw prevents the nut from backing off during operation.

A propeller end cover is used to protect the end of the shaft and to insure that the liquid entering the propeller will flow smoothly.

DIFFUSER AND DIFFUSER EXTENSION CONE

The diffuser consists of a group of guide vanes located above the discharge side of the propeller. Its function is to straighten the flow by eliminating the spiral flow path set up by the rotation of the propeller and to reduce the velocity of the flow after it leaves the propeller. The diffuser is bolted to the upper flange of the casing and the casing in turn is imbedded in the concrete.

The split diffuser extension cone is bolted to the top of the diffuser. Neoprene seal rings are provided in the top of the cone to prevent the entrance of water, sand or silt into the lower bearing.

SUCTION BELL

The split suction bell guides the water into the propeller and is bolted to the casing.

BEARINGS

The pump is provided with upper and lower line bearings of the greaseless/water lubricated type. The upper bearing is located at the top of the cover plate. The lower bearing is located in the diffuser hub. Both bearings are piped for house water for lubrication and flushing.

The bearings are grooved to provide for maximum distribution of the water for lubrication and flushing of the bearing surface. Seals are provided at the bottom end of each bearing to to prevent the entrance of water, sand or silt.

~~Each bearing is provided with a temperature relay bulb to sound an alarm in case of excessive~~ temperatures.

~~For bearing lubrication refer to Section V.~~

STUFFING BOX

The stuffing box which is an integral part of the upper bearing seals the pump against leakage along the shaft at the point where the shaft passes through the cover. It is packed with rings of braided PTFE/graphite packing and a seal cage. It is equipped with a split packing gland which permits removal of the gland in halves. Independent sealing should be provided from a supply of clean liquid at a positive pressure slightly higher than pump discharge pressure. A steady drip from the stuffing box will indicate proper gland adjustment.

COUPLINGS

A forged-on rigid flanged coupling arrangement connects the gear drive shaft to the upper pump shaft and the upper pump shaft to the lower pump shaft.

Fitted bolts and a rabbet fit are used in the couplings to assure positive alignment and rigid assembly capable of transmitting high thrust and torque.

A flexible coupling connects the gear drive shaft to the turbine.

For alignment instructions refer to Section III.

SECTION II

PRE-INSTALLATION

INSPECTION OF EQUIPMENT

Immediately on receipt of the equipment, inspect and check it against the shipping manifest. Examine crating and wrapping before discarding. Parts or accessories are sometimes wrapped individually or fastened to the crate. Report any damage or shortage to the transportation company's local agent.

STORAGE

When it is necessary to store a pump for a short time before it can be installed, place it in a dry location. Protect it thoroughly from moisture. When protecting flanges are bolted to the suction and discharge nozzles at the factory, they should not be removed.

Long term storage in excess of 30 days is not recommended. If long term storage is unavoidable, care should be taken to protect the unit. The exposed surface of the shaft and coupling flange should be examined to be sure the protective coating applied has not been removed. Check the stuffing box to insure that it contains no packing which could cause corrosion of internal parts as a result of condensation. Protect the bearings and stuffing box against entry of sand, grit or other foreign matter.

Important - Do not remove internal or external bracing until ready to install unit.

CLEANING PRIOR TO INSTALLATION

If rust preventative has been used on stored parts, they should be thoroughly cleaned. Kerosene is recommended as the best solvent for rust preventative applied by Worthington Corporation. Any coal tar distillate may be used as a solvent, if kerosene is not available. Care must be taken to assure that all traces of rust preventative are removed from machined surfaces.

FINAL PREPARATION PRIOR TO INSTALLATION

Obtain necessary cranes or hoists. Be sure that all hoisting cables are checked for load limits and examined for imperfections. Proper rigging procedure must be observed when installing the pump due to the large weights involved.

NOTE: Leffel installed and aligned the pumps, turbine, and gearboxes following their own procedures. These procedures are provided in the Installation Data section of the O & M.

SECTION III

INSTALLATION

LOCATION OF EQUIPMENT

Accessibility for installation or maintenance is of prime importance in the location of the pump. There should be ample head room available to allow use of overhead cranes of sufficient capacity to lift the pump or the heaviest parts of the pump.

SOLE PLATES

The sole plates are used as bearing surfaces for the pump supports. It is essential that the mounting faces be machined to an even flat surface since the sole plates are used in aligning the pump.

ALIGNMENT

Accurate alignment of the pump in the field is essential to successful pump operation.

An overhead crane or lifting device capable of lifting the complete rotor assembly must be available. Suitable timbers, jacks, cables, etc. should be on hand.

The following alignment procedure is outlined to assist in aligning these units. Although an attempt has been made to be as complete as possible, every contingency cannot be covered nor can a written procedure completely replace good judgement as the work progresses. Any deviations from this procedure should conform to good engineering practices.

Care must be exercised when lowering pieces into the pit to prevent damage to the pump or foundation due to the large weights involved.

CAUTION: Normally, the rotor supporting ring will support the pump while the rotor is uncoupled from the gear unit. Other means of supporting the pump rotor must be used if the supporting ring is removed.

The alignment of these units is done in two ways as follows:

A. Imbedded Parts -

1. Lower pump casing into pit, support it in correct height and check for roundness. Use inside and outside stays to obtain plus or minus 1/32"from drawing dimensions.

2. Set base ring at correct level; check for plumb with casing and for roundness. Grout.

3. Place deflector anchor plates in position and grout. (These anchor plates may also be placed immediately during pouring of pit walls.)

B. Removable Parts -

4. Lower suction bell halves down through casing onto pit floor.

5. Assemble lower bearing and part of grease piping and install in diffuser.

6. Install remainder of grease piping and temperature bulb. Care must be taken to avoid kinking of the capillary unrolled tubing and relay.

SK-177683

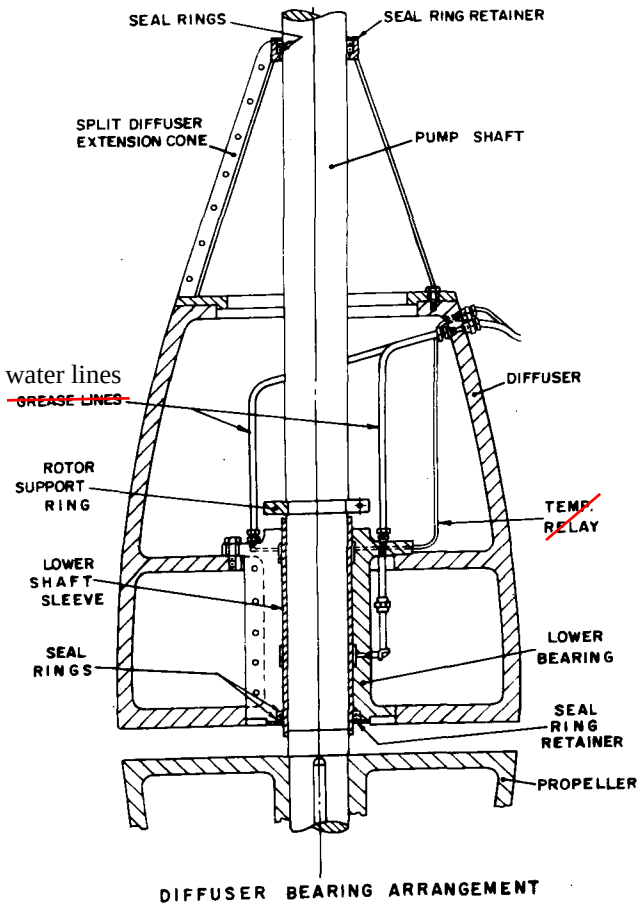

SK-177683

DIFFUSER BEARING ARRANGEMENT

7. Install rotor support ring on shaft.

8. Slide shaft with shaft sleeve through lower bearing until the support ring comes to rest on the bearing.

9. Install lower bearing seal rings and seal retainer.

10. Shore up propeller with centerline vertically.

11. Place shaft keys on shaft.

12. Lift diffuser with shaft over propeller and slide shaft into propeller hub. Seal shaft to propeller hub with epoxy resin on the end faces only.

13. Install propeller nut and tighten one flat. Then bolt on propeller hub end cover.

14. Lift the diffuser, shaft and propeller together as an assembly and carefully lower it into the casing. Apply red lead to the casing and diffuser mating flanges.

15. Check for alignment of propeller in casing. Dowel and bolt up.

16. Install the split diffuser extension cone with seal rings.

17. Lower discharge elbow deflector plate into discharge chamber to a position below its final location.

18. Attach deflector plate supports to imbedded supports.

19. Raise and adjust deflector plate to its final position and weld to deflector supports.

20. Install cover plate. Use babbitt seal at flanges. Check for plumb with pump shaft.

21. Install grease piping and capillary for temperature relay up through cover plate. Run tubes along a vane edge from hub to outer wall, fasten with clips and cover with the shield.

22. Install intermediate shaft and check for alignment.

23. Install the combined split upper bearing and stuffing box. Seal with babbitt seal to cover plate. A diametral clearance of 1/2" has been provided in the cover to allow for adjustment in line up. Shaft adjustment and runout may be checked at the same time.

24. Using shims around the shaft in the stuffing box, center the shaft in the stuffing box and level the coupling face.

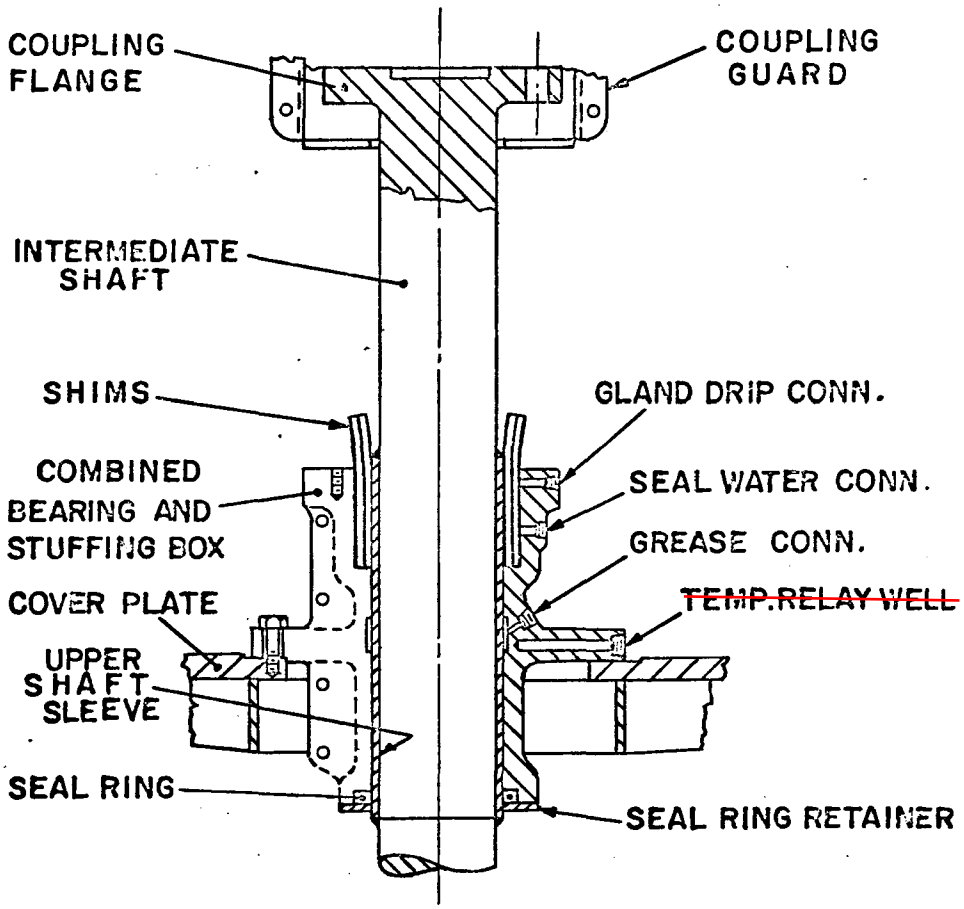

METHOD OF ALIGNING PUMP SHAFT

25. Place the gear reducer on the gear reducer base. Center the gear reducer coupling over the pump coupling within the tolerance required for drilling or tapping the gear reducer base holes necessary for mounting the gear reducer. Using the gear reducer mounting flange holes as a guide, mark the position of the holes on the gear reducer base mounting flange. Remove the gear reducer and drill or drill and tap the mounting holes, as required, in the gear reducer base mounting flange.

26. Replace the gear reducer with its attached coupling on the gear reducer base. Accurately center the gear reducer coupling over the pump coupling.

27. Check for angular and parallel alignment of the coupling halves by using feeler gauges between the coupling faces and a dial indicator mounted on the gear reducer shaft or coupling. During this procedure, the pump coupling is not to be moved. All adjustments must be made by moving the gear reducer on the gear reducer base. If the coupling faces are not parallel, shims should be used between the gear reducer base flange and the gear reducer mounting flange.

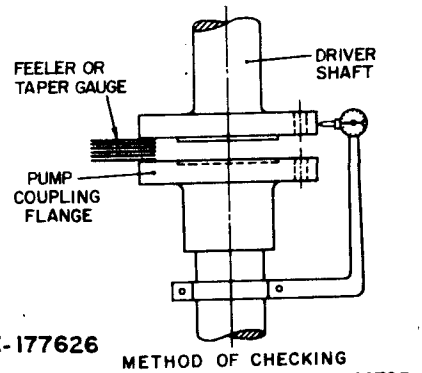

METHOD OF CHECKING ALIGNMENT USING DIAL INDICATOR AND FEELER OR TAPER GAUGE

All angular check readings should be within 0.001 in. and all parallel check readings should be within 0.002 in.

28. Bolt the gear reducer to the gear reducer base securely.

29. Raise the rotor with the jacks until the coupling faces come together. Ream the holes in the coupling for the fitted bolts. Insert coupling bolts and tighten securely.

30. Recheck coupling alignment utilizing a dial indicator mounted on the gear reducer base.

31. Dowel the gear reducer to the gear reducer base. Dowel holes must be drilled in the field.

32. Bolt suction bell to casing.

33. Rotate rotor to make sure that it is not bound.

34. Dowel upper bearing to cover and install split bottom seal ring.

35. Install stuffing box packing. Refer to packing procedure.

36. Install turbine. Refer to turbine manufacturer's instructions -- furnished separately.

PIPING

Satisfactory operation cannot be maintained when piping imposes a force on the pump. Pumps can be sprung and pulled out of position by drawing up on the bolts in the piping flanges. Flanges must be brought squarely together before the bolts are tightened.

Discharge piping and associated equipment should be supported and anchored near but independent of the pump so that no strain will be transmitted to the pump casing. Pipe strains are a common cause of misalignment, worn bearings, worn couplings, and vibration.

In a new installation care should be taken to prevent dirt and construction debris from entering the pump. The wet well should be thoroughly cleaned prior to start-up.

SECTION IV

OPERATION

The following procedures are presented to outline the most important steps involved in pump operation. Any modifications of these procedures due to particular installation peculiarities should conform to good engineering practices.

STARTING AND OPERATING PUMPS

Before the initial starting operation or starting after an overhaul, test the gear drive for direction of rotation with the gear drive coupling bolts removed. The pump rotation is counter-clockwise when viewed from the gear drive end of the pump.

The pump does not require priming since the propeller is always submerged. However, the depth of water above the bottom of the suction bell should never be allowed to fall below the level originally specified since vortex action and cavitation could occur. Any contemplated lowering of the wet well water surface below this value should be referred to your nearest Worthington Sales Office for study and comment.

A thorough check of the lubrication system must be made before starting the pump.

Final inspection should be carefully made of all parts of the unit prior to start-up in order to insure that the pump is ready for operation. Check that all temporary internal bracing or wooden framing has been removed. Rotate rotor to be sure it is free.

Start the turbine according to turbine manufacturer's instructions.

The amount of independent seal liquid to the stuffing box must be controlled and the stuffing box gland so adjusted as to permit a slight seepage of liquid out of the stuffing box at all times during operation, otherwise the packing will cause excessive wear on the shaft sleeve. The liquid seal is as necessary to provide lubrication between the shaft and packing as it is for preventing air from entering the pump through the stuffing box.

STOPPING PUMPS

Stop the turbine according to the turbine manufacturer's instructions.

SECTION V

LUBRICATION

~~The pump bearings are grease lubricated by a motor operated lubricating system. (Refer to lubricating system manufacturer's instructions.)~~

Pump bearing lubrication is provided by house water piped to the bearings. (Refer to page 2 of this original pump O & M.)

SECTION VI

MAINTENANCE

INSPECTIONS

Frequent observations should be made of pump operation to avert trouble. Whether or not you consider a log of these inspections necessary, the operator must be alert for irregularities in the operation of the pumps. He should immediately report any trouble symptoms which he detects. Bearing lubrication should be checked at frequent intervals. A change in the sound of a running pump is a warning of possible trouble. Refer to section entitled "Locating Troubles".

Inspection - Occasionally check all pump bolting and tighten where necessary. Disconnect driver coupling halves and recheck alignment if tightening of bolts was necessary.

Complete Overhausl - The frequency of a complete overhaul depends on the hours of operation of the pump, the severity of the conditions of service, the materials used in the pump construction, and the care the pump receives during operation.

The pump is a custom built unit and requires the use of highly skilled and specialized craftsmen for proper dismantling. It is recommended that dismantling for inspection or repair be made with Worthington erection supervision. Should erection supervision be required, contact your nearest Worthington Sales Office.

The pump should never be opened unless there is definite evidence that the capacity has fallen off excessively or unless there is an indication of trouble inside of the pump. See section entitled "Locating Troubles".

DISMANTLING PROCEDURE

Care must be exercised in the dismantling operation due to the large weight of the various parts. An overhead crane or lifting device capable of lifting the complete assemblies must be available. Suitable timbers, jacks, cables, etc. should be on hand.

NOTE: Lay out all parts in the order in which they are removed. Coat all pieces subject to corrosion with a good anti-rust compound. Protect all machined surfaces against metal-to-metal contact, grit, dust, etc. by thoroughly wrapping the parts. Tag each piece for quick identification at assembly.

Rarely will it be necessary to dismantle the pump since it is possible to service the bearings without removing the pump rotor. Both bearings are split and can be readily reconditioned and replaced.

A. To remove the upper bearing, proceed as follows:

1. Reduce water level in pump chamber.
2. Disconnect water, grease and temperature capillary piping.
3. Slide bearing up on shaft (no rabbit fit in cover).
4. Bearing halves can now be separated and removed.

B. To remove the diffuser bearing, proceed as follows:

1. Dewater pump chamber.
2. Remove the split diffuser extension cone.
3. Remove grease piping and temperature relay bulb from inside of diffuser hub.
4. Remove rotor support ring.
5. Loosen bearing flange and draw bearing out of the diffuser hub.
6. Bearing halves can now be separated and removed.

C. If it becomes necessary to remove the pump shaft, proceed as follows:

1. Dewater pump chamber.
2. Dismantle suction bell.
3. Remove propeller hub end cover, propeller and shaft keys.
4. Remove gear reducer, coupling guard and upper bearing.
5. Remove diffuser extension cone.
6. The pump shaft can now be removed.

INSPECTION OF PARTS AFTER DISMANTLING

DIFFUSERS

The diffuser waterways must be kept clean and clear of rust. Whenever a unit is dismantled, clean and paint the waterways with a suitable paint which will adhere firmly to the metal in order to minimize damage due to corrosion. An enamel-like finish is desirable. A routine program of cleaning and repainting the diffuser will deter damage due to corrosion.

SHAFT AND SHAFT SLEEVES

When the pump is dismantled, all shafting should be examined carefully for corrosion, wear, and distortion. The propeller hub fit on the lower shaft should be checked for rusting or pitting. All keyways should be checked for tight key fits since a loose fit subjects the shafting to shock loading.

Replace a shaft that is bent or distorted. If the shaft shows wear at the propeller hub or a sleeve location, it may be possible to rebuild it by metal spraying or plating and regrinding. This repair should only be carried out by trained and competent personnel. After a shaft has been repaired, check it for possible runout (maximum 0.002). Recheck it after complete assembly of the rotor.

All shaft sleeves should be checked for wear prior to reassembly of the pump. Any sleeves indicating wear should be replaced. The stuffing box sleeve should be replaced if there is any evidence of scoring.

BEARINGS

If the bronze bearings show wear upon inspection they should be replaced. Worn bearings can cause pump vibration. It is well to remember that when parts used for metal contact in new or good condition are assembled in contact with dirty or worn parts, the new parts are very likely to wear out rapidly. In general, if the bearings are replaced, the mating shaft sleeves should also be replaced.

ASSEMBLING

To assemble the pump reverse the dismantling procedures previously described except for packing instructions. Refer to alignment instructions to complete the assembly. Install packing as per the below packing procedure.

PACKING

For packing the stuffing box use a good grade of graphited braided asbestos packing. Do not under any circumstances use flax packing in the pump as rapid wear of the sleeves may result.

The following procedure should be followed in repacking a stuffing box.

1. Loosen the stuffing box gland.

2. Remove the old packing with a packing puller and clean the stuffing box.

3. Make sure the packing to be used is of correct type and size. Measure stuffing box to determine proper length of packing. Packing should be cut slightly shorter than measured to prevent butting of the ends and buckling.

4. Insert each ring of packing separately, pushing it as far as possible into the stuffing box and seating it firmly. Stagger the rings so that the joints are 90° or 180° apart.

5. After inserting the required number of rings of packing, the seal cage can be inserted. It is important to make sure it is located directly under the sealing connection and that the insertion of successive rings will not displace it.

6. Continue adding more rings of packing. When the required number of packing rings has been inserted, install the gland and tighten the gland nuts by hand; then back off the nuts until the gland is loose. In tightening the gland the nuts should be brought up uniformly so that the gland will not be cocked and so that the packing is subjected to uniform pressure.

7. New packing has to be run in. It is good practice to start the pump with the stuffing box gland quite loose. After the pump has been running for approximately 10 to 15 minutes, gradually tighten the stuffing box gland. Packing that is too tight in the box will cause undue friction, creating heat which will glaze the packing and possibly score the shaft sleeves. Packing must remain soft and pliable.

Precaution: It may be impossible to add the last ring of packing in the stuffing box and still insert the gland. When this occasion arises, omit the last ring of packing and tighten the gland. Continue to tighten the gland at periodic intervals (daily), until the packing has seated itself well enough to allow the final ring to be inserted.

LOCATING TROUBLES

The troubles which may occur with your pump and their causes are listed below. The operator can often avoid unnecessary expense by careful consideration of the points outlined.

Pump Will Not Start

(a) Defective turbine or gear unit.
(b) Propeller jammed.

Failure to Deliver Liquid

(a) Propeller not submerged.
(b) Pump speed too low.
(c) Discharge head too high (greater than that for which the pump is rated).
(d) Foreign material caught in waterways.
(e) Too much draw-down in wet well (vortex action or air being pulled into suction).
(f) Wrong rotation.
(g) Mechanical defects:
Broken shaft

Insufficient Capacity or Discharge Pressure

(a) Speed too low.
(b) Discharge head too high (insufficient capacity).
(c) Waterways partially clogged.
(d) Too much draw-down in wet well (vortex action or air being pulled in suction).
(e) Mechanical defects:
Damaged propeller
(f) Discharge head too low (capacity requirements greater than that for which the pump was purchased).

Pump Vibrates

(a) Misalignment.
(b) Foundation not rigid.
(c) Propeller partially clogged causing unbalance.
(d) Shaft bent.
(e) Worn bearings.

SECTION VII

SERVICE PARTS AND PARTS LIST

SERVICE PARTS

The severity of the conditions of service, the extent to which repairs can be carried out in the field, and the number of units installed will determine to a great extent the minimum number of service parts which should be carried in stock at the site of the installation.

The minimum service parts for a pump should include the following:

Ref. No.	Quantity	Name of Part
10	1	Shaft Sleeve - Lower
10-A	2	Shaft Sleeve - Halves (Upper)
27	3	Seal Ring
27-A	2	Seal Ring
Leffel dwg: 54226	2	Bearing - Halves (Lower)
Leffel dwg: 54225	2	Bearing - Halves (Upper)

In all cases a sufficient stock of spare packing for the stuffing boxes should be on hand.

HOW TO ORDER SERVICE PARTS

When ordering service and replacement parts the pump serial number, size, and type of pump must be given. Refer to the name-plate. This information is essential in order that the Worthington Corporation may identify the pump and furnish the correct service parts. Give the name and number of the part as listed in the parts list of the sectional drawing applicable to the pump, the quantity required, and, where possible, the complete symbols stamped on the old part. Orders for service parts should be sent to the nearest Worthington Sales Office.

RETURNING PARTS

All materials returned to the factory must have a Returned Apparatus (RA) tag attached. Consult the nearest Sales Office or Regional Engineering and Service Office for shipping instructions and an "RA" tag. Unnecessary delays are avoided when parts or equipment are returned to the proper factory using the correct procedure.

1. Contact your nearest Sales Office or R.E.&S. Office, listing the material to be returned and the reasons for returning it.

2. On receipt of the "RA" tag, fill in the tag and post card (attached) as shown below.. Make sure you give the name and parts list number of parts involved and the serial number of the equipment. Give the method and date of shipment on the post card.

3. Detach the post card and mail it directly to the factory designated by your nearest Worthington Sales Office or R.E.&S. Office. This will notify the Service and Erection Department that such material is enroute. The card should be at the factory before the arrival of the material.

4. The "RA" tag must accompany the material shipped. Enclose it in the shipping container or attach it to the part being returned. In cases where more than one part or box is returned print or stencil your name, the name of the part, and the "RA" tag number on each part or box, attaching the tag to one of the parts. This will facilitate quick identification.

5. Articles being returned should be carefully packed to prevent damage from handling or from exposure to weather.

The following is a sample of an "RA" tag:

WORTHINGTON CORPORATION
RETURNED APPARATUS Tag No. 102336

R. M. SE-27000
We have shipped material (listed below) covered by your order D.O. Phila.-123
To Worthington Corp.
Address Harrison, N. J.
Date of Shipment 8-3-59 Prepaid Via Express ☒ P. P. ☐ Freight ☐
For Credit ☐ For Repair ☒ For Mounting ☐ As Sample ☐
Works Harrison Office Phila. Authorized by B.C.White
Material (1) ONE IMPELLER REF. NO.4
FOR 5 FLC 10 PUMP S/N 1477777
Shipped By WINTERGREEN CO.
Address NEWARK, PA.
THIS TAG TO BE ATTACHED TO ARTICLE BEING RETURNED Do Not Use As Shipping Tag

PLEASE FILL IN ALL BLANK SPACES

—Returned Apparatus Tag—to be attached

DO 143 157M10

WORTHINGTON CORPORATION
RETURNED APPARATUS Tag No. 102336

R. M. SE-27000
We have shipped material (listed below) covered by your order D.O. Phila.-123
To Worthington Corp.
Address Harrison, N. J.
Date of Shipment 8-3-59 Prepaid Via Express ☒ P. P. ☐ Freight ☐
For Credit ☐ For Repair ☒ For Mounting ☐ As Sample ☐
Works Harrison Office Phila. Authorized by B.C.White
Material (1) ONE IMPELLER REF. NO.4
FOR 5 FLC 10 PUMP S/N 1477777
Shipped By WINTERGREEN CO.
Address NEWARK, PA.
THIS CARD TO BE DETACHED AND MAILED

PLEASE FILL IN ALL BLANK SPACES

—Returned Apparatus Tag—to be mailed

THE JAMES LEFFEL & CO.

Manufactures of

HYDRAULIC TURBINES

1978 Commerce Circle—Springfield, Ohio USA 45504-2012

Phone (937) 322-0116 Telefax (937) 322-0467

SECTION 10

THE JAMES LEFFEL & CO.

Manufactures of

HYDRAULIC TURBINES

1978 Commerce Circle—Springfield, Ohio USA 45504-2012

Phone (937) 322-0116 Telefax (937) 322-0467

SECTION 10

OPERATION and MAINTENANCE NOTES

This section is provided for plant operators and maintenance personal to place notes.

Furthermore, if there are questions or maters dealing with the turbine and/or this refurbishment please contact the following:

Anders Dynge
The James Leffel & Co.
1978 Commerce Circle
Springfield, Ohio 45504
Phone: 937-322-0116
Email: andersdynge@leffelcompany.com