RW-138362

PART NO.	NO. OF PIECES	NAME OF PART	MAT.	PATT. NO. OR CUT FROM PT. #
938362	1	DIFFUSER COMPL.	STL	
938362-1	6	DIFFUSER SEGMENTS	M3213	RW-138361 UC-8967-A

MACHINE SHOP NOTE:

EACH DIFFUSER SEGMENTS IS CAST WITH A 3/4" TRIM ALLOWANCE ON EACH SIDE, WHICH IS TO BE MACHINED OFF BEFORE ASSEMBLY.

MATERIAL: ASTM SPEC A 27-60 GRADE 65-35 FOR CASTING.
ASTM SPEC. A 283-58 GRADE "B" FOR STEEL PLATES.

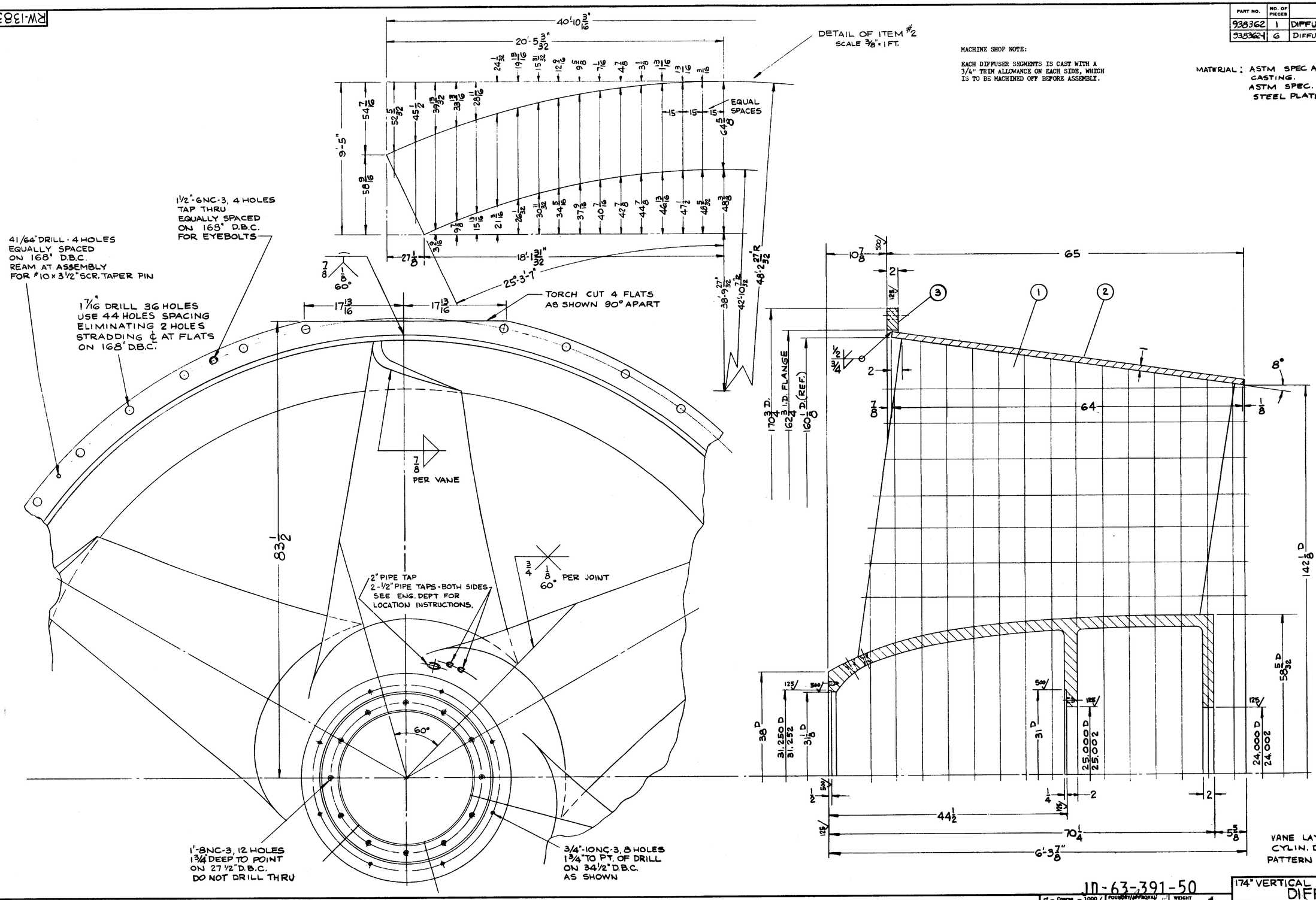

APPROVED
Subject to Provisions Stated in Special Conditions Section of the Contract
U. S. Army Engineer Division, North Pacific
Corps of Engineers
By
Authorized Representative of the Contracting Officer
Date 5 JUL 1967

VANE LAYOUT ON SL-11409
CYLIN. DEVEL. ON SL-11410
PATTERN SHOP DWG. ON RW-138361

ALT. DATES
ADDED 4 FLATS TO O.D. OF FLANGE, CHANGE NO. OF HOLES IN FLANGE FROM 60 TO 36. REVISED CONE LAYOUT 5-15-64 JBC.

A	B
ADDED 2" P.T. & 2 1/2" P.T. BOTH SIDES 2-7-66 WLS	

FOR INFORMATION ONLY

JD-63-391-50

cf – Coarse	1000
rf – Rough	500
	250
f – Regular	125
	63
sf – Smooth	32
ff – Fine	16

FOUNDRY/APPROVAL: R. Radcliffe
WEIGHT: 31,000 # APPROX.
Machining tolerances:
Finished fractional dimensions where no limits given ± 1/64"
" decimal " " " " ± .005"
Where closer tolerances required limits are specified.

174" VERTICAL PROPELLER PUMP
DIFFUSER
WORTHINGTON CORPORATION
HARRISON, NEW JERSEY
ORDER P-440236 DATE 2-26-64 SCALE 1/2 INS. = 1 FOOT
DRAWN WLS CHECKED JBC APPROVED FYD RW-138362 B