US Army Corps of Engineers®

PORTLAND DISTRICT

JOHN DAY LOCK AND DAM
SOUTH FISH LADDER
FISH PUMP EMERGENCY REPAIR

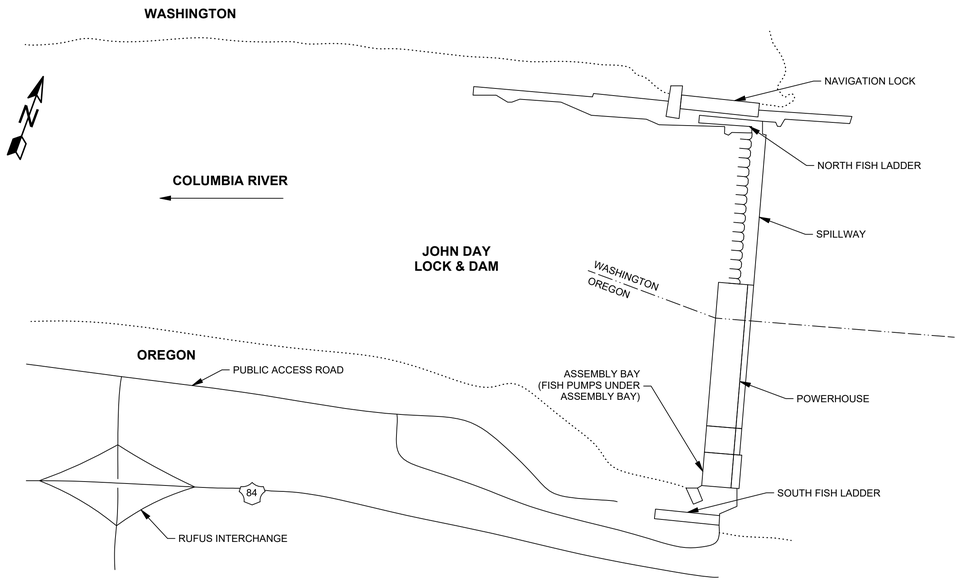

PROJECT LOCATION MAP

VICINITY MAP

PROJECT PHOTO

FOR INFORMATION ONLY

US Army Corps of Engineers®

MARK	DESCRIPTION	DATE

DESIGNED BY: D. PENN
DRAWN BY: J. LOVIN
CHECKED BY: B. FILAN
SUBMITTED BY: R. BOUDERS, P.E.
SIZE: ANSI D
ISSUE DATE: MMMMM YYYY
SOLICITATION NO.: XXXXXX-XX-X-XXXX
CONTRACT NO.: WXXXXX-XX-X-XXX

U.S. ARMY CORPS OF ENGINEERS
PORTLAND DISTRICT
333 SW 1ST AVE
PORTLAND, OR 97204-3440

JOHN DAY LOCK AND DAM
SOUTH FISH LADDER
FISH PUMPS EMERGENCY REPAIR

PROJECT LOCATION AND VICINITY MAPS

SHEET ID

G-001

GENERAL REFERENCE DRAWINGS

FIO DRAWING NUMBER	FIO DRAWING TITLE
G-001	PROJECT LOCATION AND VICINITY MAPS
G-002	DRAWING INDEX
M-001	MECHANICAL NOTES
M-002	ASSEMBLY BAY & TURBINE PUMP ROOM - ISOMETRIC VIEW
M-101	MECHANICAL PLAN - ASSEMBLY BAY EL.185.00
M-201	ASSEMBLY BAY ELEVATION VIEW
M-401	ASSEMBLY BAY EL. 185.00 AND EL. 168.50 - ACCESS HATCH PLAN VIEWS
M-402	ASSEMBLY BAY EL. 131.67 - TURBINE ROOM PLAN VIEW
M-501	FISH PUMP - TYPICAL SECTION VIEW
M-502	FISH PUMP - DETAIL VIEW
54122	EXTENSION CONE DIFFUSER
54124	PROPELLER SUPPORT RING REFURBISHMENT
54192	PUMP SHAFT WITH SLEEVE FORGE AND MACHINE (SHEET 1 OF 3)
54192	PUMP SHAFT WITH SLEEVE FORGE AND MACHINE (SHEET 2 OF 3)
54192	PUMP SHAFT WITH SLEEVE FORGE AND MACHINE (SHEET 3 OF 3)
54193	EXTENSION SHAFT WITH SLEEVE REFURB EXISTING
M-004	FISH PUMP LOWER BEARING SLEEVE
M-005	FISH PUMP LOWER BEARING SLEEVE
54199	COUPLING STUDS/NUTS PUMP-EXTENTION SHAFT EXTENSION-GEARBOX SHAFT
54221	PUMP PROPELLER REFURBISHMENT
54230	PUMP PROPELLER BLADE TIP DIAMETER REPAIR
54225	UPPER BEARING VERTICAL PROPELLER PUMP REFURBISMENT (SHEET 1 OF 2)
54225	UPPER BEARING VERTICAL PROPELLER PUMP REFURBISMENT (SHEET 2 OF 2)
54226	LOWER BEARING VERTICAL PROPELLER PUMP REFURBISMENT (SHEET 1 OF 2)
54226	LOWER BEARING VERTICAL PROPELLER PUMP REFURBISMENT (SHEET 2 OF 2)
M-003	LOWER PUMP BEARING LINER

FOR INFORMATION ONLY

US Army Corps of Engineers®

MARK	DESCRIPTION	DATE

DESIGNED BY: D. PENN
DRAWN BY: J. LOVIN
CHECKED BY: B. FILAN
SUBMITTED BY: R. BOUDEAS, P.E.
SIZE: ANSI D
ISSUE DATE: MMMMM YYYY
SOLICITATION NO.: XXXXXX-XX-X-XXXX
CONTRACT NO.: WXXXXX-XX-X-XXX
FILE NO.:

U.S. ARMY CORPS OF ENGINEERS
PORTLAND DISTRICT
333 SW 1ST AVE
PORTLAND, OR 97204-3440

JOHN DAY LOCK AND DAM
SOUTH FISH LADDER
FISH PUMPS EMERGENCY REPAIR

DRAWING INDEX

SHEET ID

G-002

MECHANICAL GENERAL NOTES:

1. INFORMATION, TOLERANCES, AND NOTES ON THIS SHEET APPLY TO ALL MECH. DRAWINGS, UNLESS NOTED OTHERWISE.
2. UNLESS OTHERWISE NOTED, MECHANICAL FASTENERS SHALL BE CARBON OR ALLOY STEEL, HOT-DIP GALVANIZED IN ACCORDANCE WITH ASTM F2329.
3. NOMINAL THREAD CLASS FOR INTERNAL AND EXTERNAL THREADS IS UNC 2A/2B. WHEN THREADS ARE CUT FOR USE WITH HOT-DIP GALVANIZED FASTENERS, ADJUST TOLERANCES PER ASTM A563.
4. WELDING OF CARBON AND STAINLESS STEEL SHALL BE PERFORMED IN ACCORDANCE WITH THE SPECIFICATIONS.
5. WELDING OF ALUMINUM SHALL BE PERFORMED IN ACCORDANCE WITH AWS D1.2
6. KEYWAYS SHALL BE MACHINED IN ACCORDANCE WITH ASME B17.1. THE CONTRACTOR SHALL BE RESPONSIBLE FOR SUPPLYING KEYS FOR ALL ASSEMBLIES. KEYS SHALL CONFORM TO REQUIREMENTS INDICATED ON CONTRACT DRAWINGS.
7. 125 MICROINCH SURFACE TEXTURE ON ALL MACHINED SURFACES, UNLESS SHOWN OTHERWISE. SURFACE TEXTURE PER ASME B46.1.
8. VARIOUS DIMENSIONS SHOWN ARE BASED ON SPECIFIED EQUIPMENT. ADJUSTMENTS MAY BE REQUIRED DEPENDING ON EQUIPMENT SUPPLIED.
9. ALL LINEAR UNITS ARE FEET AND INCHES OR INCHES AND ALL ANGULAR UNITS ARE DEGREES, UNLESS SHOWN OTHERWISE.
10. BREAK CORNERS AND EDGES, UNLESS SHOWN OTHERWISE.
11. AT FABRICATION, ALL PARTS SHALL BE ASSIGNED A CONTRACTOR-DESIGNATED PART NUMBER MARK BY EMBOSSING OR ETCHING. ALL FABRICATED PARTS SHALL BE SHOP ASSEMBLED AND CHECKED FOR PROPER FIT AND TOLERANCES. ALL PARTS SHALL BE MATCH MARKED FOR REFERENCE DURING ASSEMBLY.
12. ALL PARTS ESTIMATED TO WEIGH GREATER THAN 50 POUNDS-FORCE SHALL BE MANUFACTURED WITH PROVISIONS FOR LIFTING, SUCH AS TAPPED HOLES, THRU HOLES FOR SHACKLES, OR PAD EYES. IF PROVISIONS OR FEATURES DO NOT EXIST ON CONTRACT DRAWINGS, CREATE PROVISIONS ON SHOP DRAWINGS AND INDICATE THAT THE FEATURE IS FOR LIFTING OR HANDLING.
13. PERFORM PAINTING OF MECHANICAL COMPONENTS IN ACCORDANCE WITH 09 97 03.00 25 PAINTING: MECHANICAL EQUIPMENT UNLESS OTHERWISE SHOWN.
14. SEE SPECIFICATIONS FOR ADDITIONAL EQUIPMENT REQUIREMENTS. DRAWING PART NUMBERS MAY NOT REFLECT EVERY SALIENT FEATURE.

ABBREVIATIONS:

U/S	= UPSTREAM
D/S	= DOWNSTREAM
REF	= REFERENCE
NOM	= NOMINAL
TYP	= TYPICAL
BC	= BOLT CIRCLE
EL.	= ELEVATION
OD	= OUTER DIAMETER
ID	= INNER DIAMETER
COR	= CONTRACTING OFFICER REPRESENTATIVE
DIA	= DIAMETER
THRU	= THROUGH
CL	= CENTERLINE
R	= RADIUS
MIN	= MINIMUM
MAX	= MAXIMUM
MECH	= MECHANICAL
HEX	= HEXAGONAL
SKT	= SOCKET
SS	= STAINLESS STEEL
PROV	= PROVISIONAL
QTY	= QUANTITY

FOR INFORMATION ONLY

US Army Corps of Engineers®

MARK	DESCRIPTION	DATE

DESIGNED BY: D. PENN
DRAWN BY: J. LOVIN
CHECKED BY: B. FILAN
SUBMITTED BY: R. SOUDERS, P.E.
SIZE: ANSI D
ISSUE DATE: MMMMM YYYY
SOLICITATION NO.: XXXXXX-XX-X-XXXX
CONTRACT NO.: WXXXXX-XX-X-XXX
FILE NO.:

U.S. ARMY CORPS OF ENGINEERS
PORTLAND DISTRICT
333 SW 1ST AVE
PORTLAND, OR 97204-3440

JOHN DAY LOCK AND DAM
SOUTH FISH LADDER
FISH PUMPS EMERGENCY REPAIR

MECHANICAL NOTES

SHEET ID

M-001

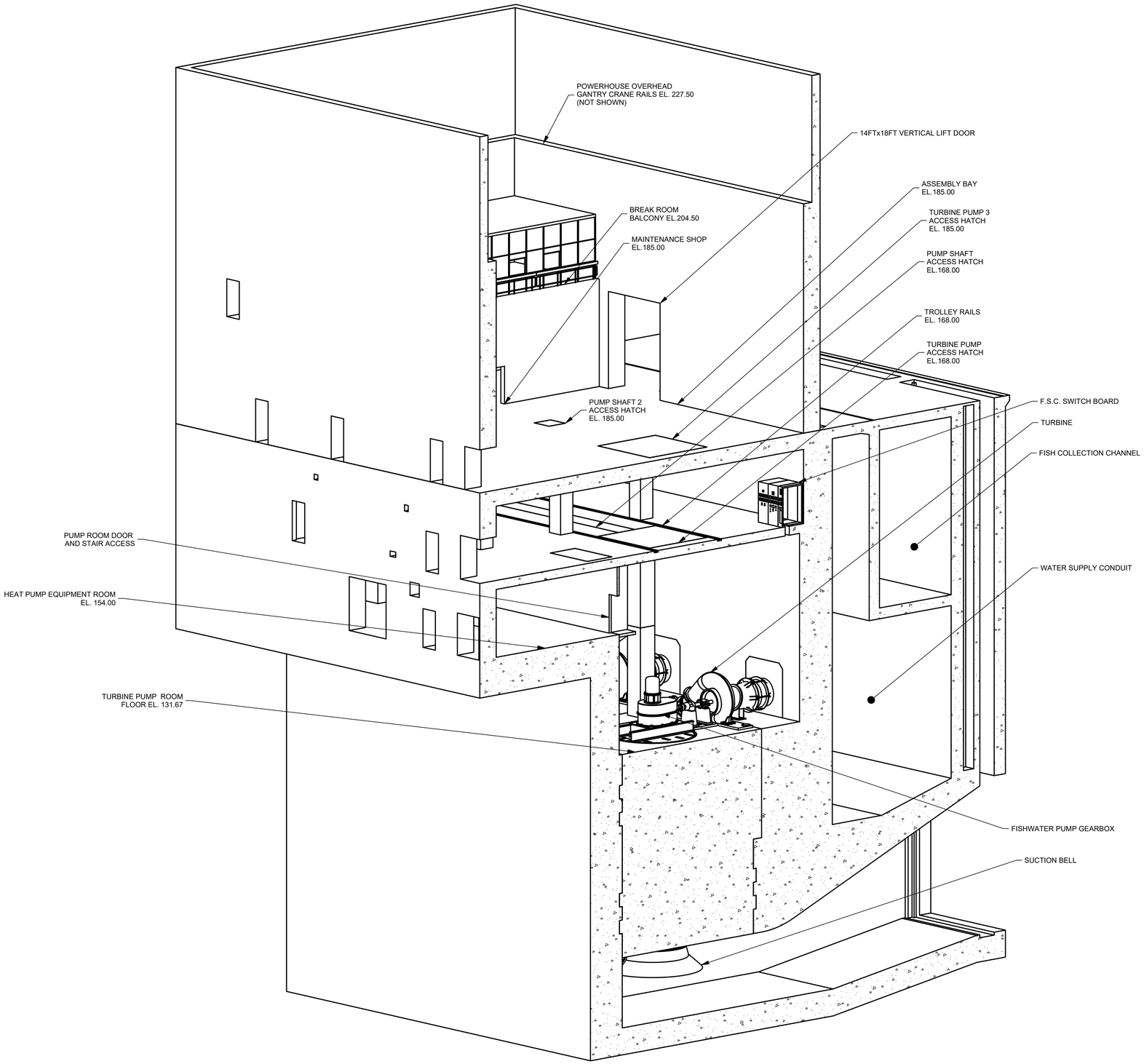

ASSEMBLY BAY & TURBINE PUMP ROOM - ISOMETRIC VIEW

SCALE: NTS

FOR INFORMATION ONLY

US Army Corps of Engineers®

MARK	DESCRIPTION	DATE

DESIGNED BY: D. PENN
DRAWN BY: J. LOVIN
CHECKED BY:
ISSUE DATE: MMMMM YYYY
SOLICITATION NO.: XXXXXX-XX-X-XXXX
CONTRACT NO.: WXXXXX-XX-X-XXX
SUBMITTED BY: SOUDERS, P.E.
SIZE: ANSI D
FILE NO.:

U.S. ARMY CORPS OF ENGINEERS
PORTLAND DISTRICT
333 SW 1ST AVE
PORTLAND, OR 97204-3440

JOHN DAY LOCK AND DAM
SOUTH FISH LADDER
FISH PUMPS EMERGENCY REPAIR

ASSEMBLY BAY & TURBINE PUMP ROOM
ISOMETRIC VIEW

SHEET ID

M-002

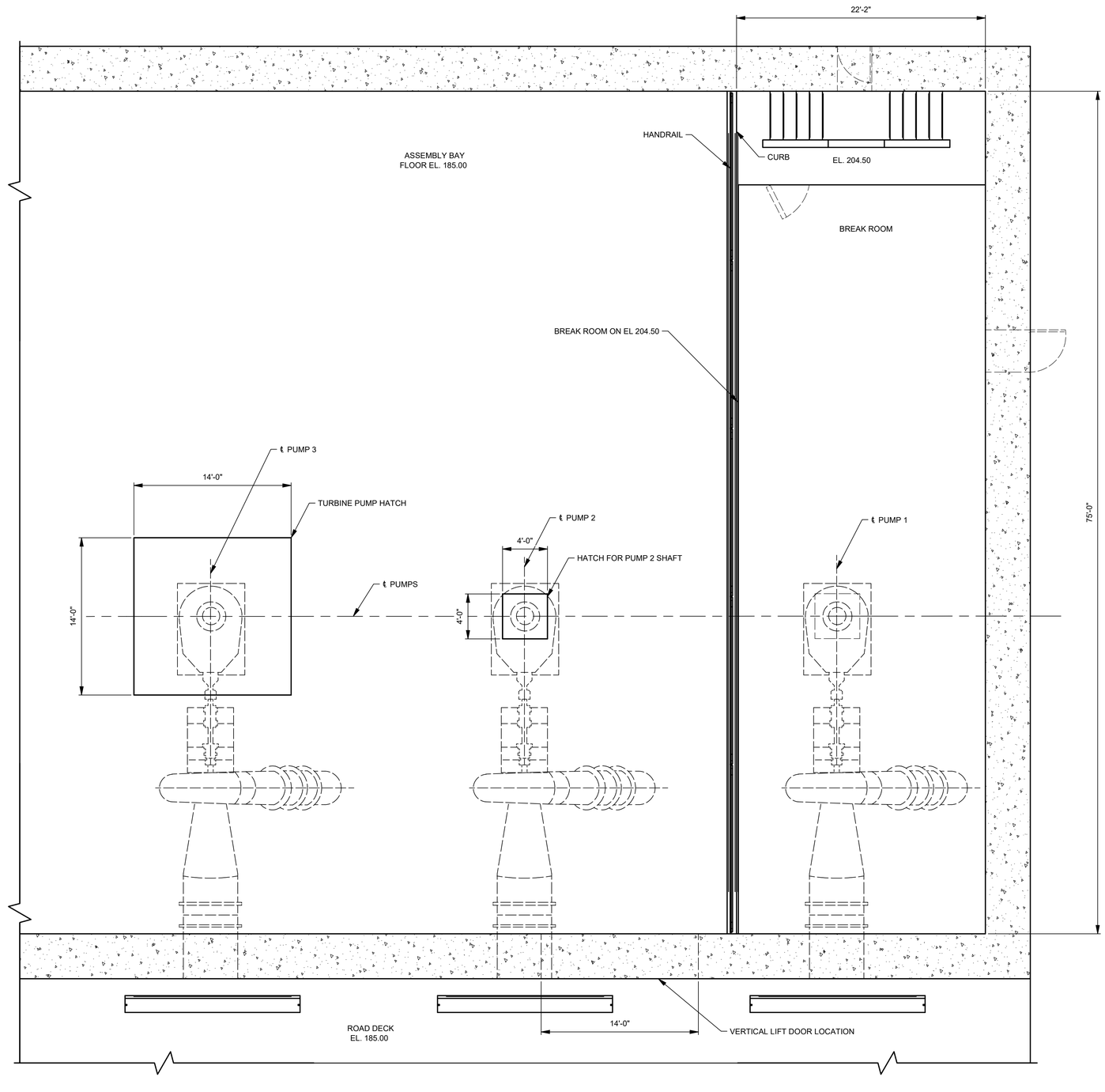

A1 ASSEMBLY BAY - PARTIAL PLAN VIEW EL. 185.00 AND 204.50

SCALE: 0 4' 8' 12'

FOR INFORMATION ONLY

US Army Corps of Engineers®

MARK	DESCRIPTION	DATE

DESIGNED BY: D. PENN
DRAWN BY: J. LOVIN
CHECKED BY:
SUBMITTED BY: A. BOUDREAU, P.E.
SIZE: ANSI D
ISSUE DATE: MMMMM YYYY
SOLICITATION NO.: XXXXXX-XX-X-XXXX
CONTRACT NO.: WXXXXX-XX-X-XXX
FILE NO.:

U.S. ARMY CORPS OF ENGINEERS
PORTLAND DISTRICT
333 SW 1ST AVE
PORTLAND, OR 97204-3440

JOHN DAY LOCK AND DAM
SOUTH FISH LADDER
FISH PUMPS EMERGENCY REPAIR

MECHANICAL PLAN
ASSEMBLY BAY EL. 185.00

SHEET ID
M-101

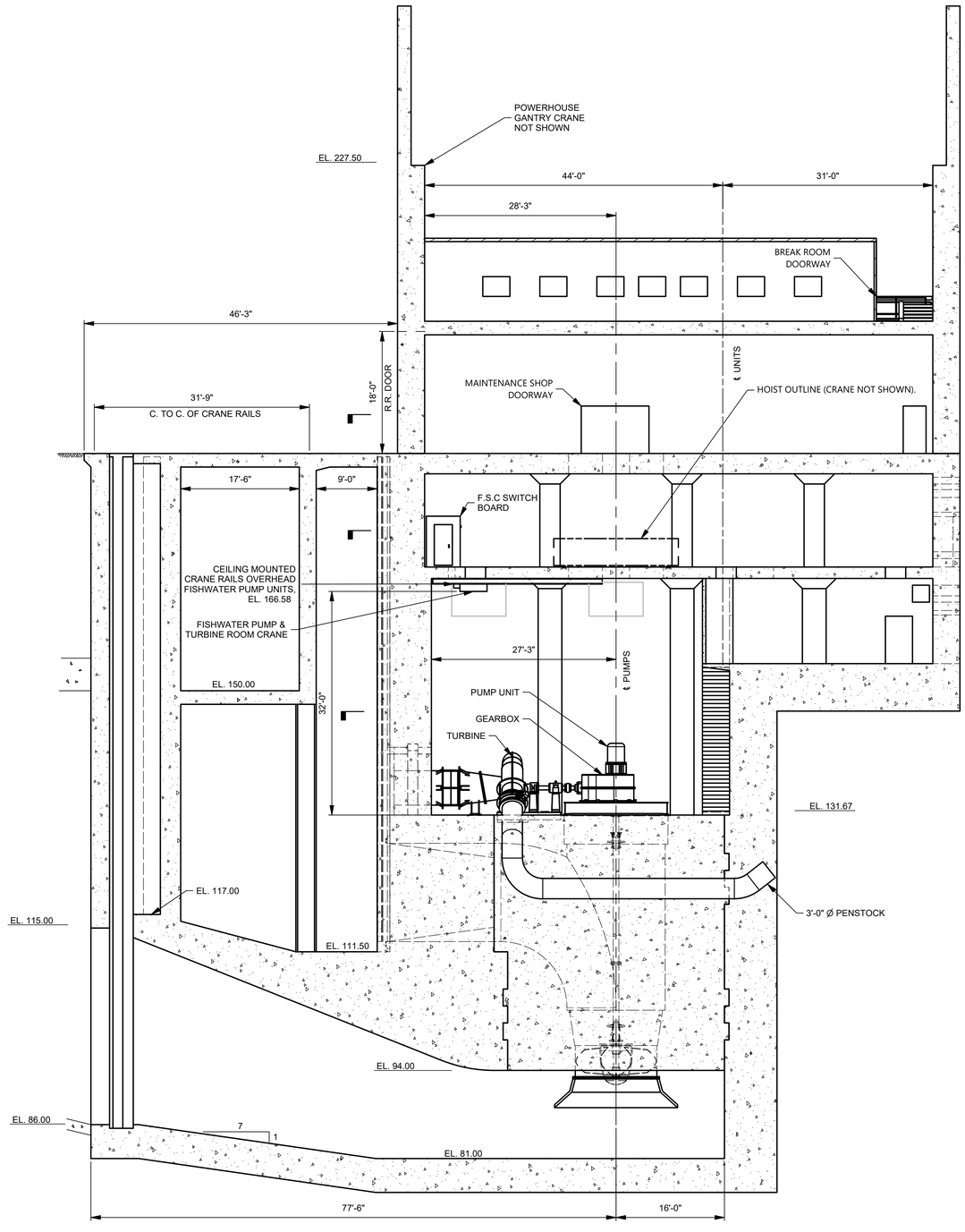

A2 ASSEMBLY BAY ELEVATION VIEW

SCALE: 1" = 10'

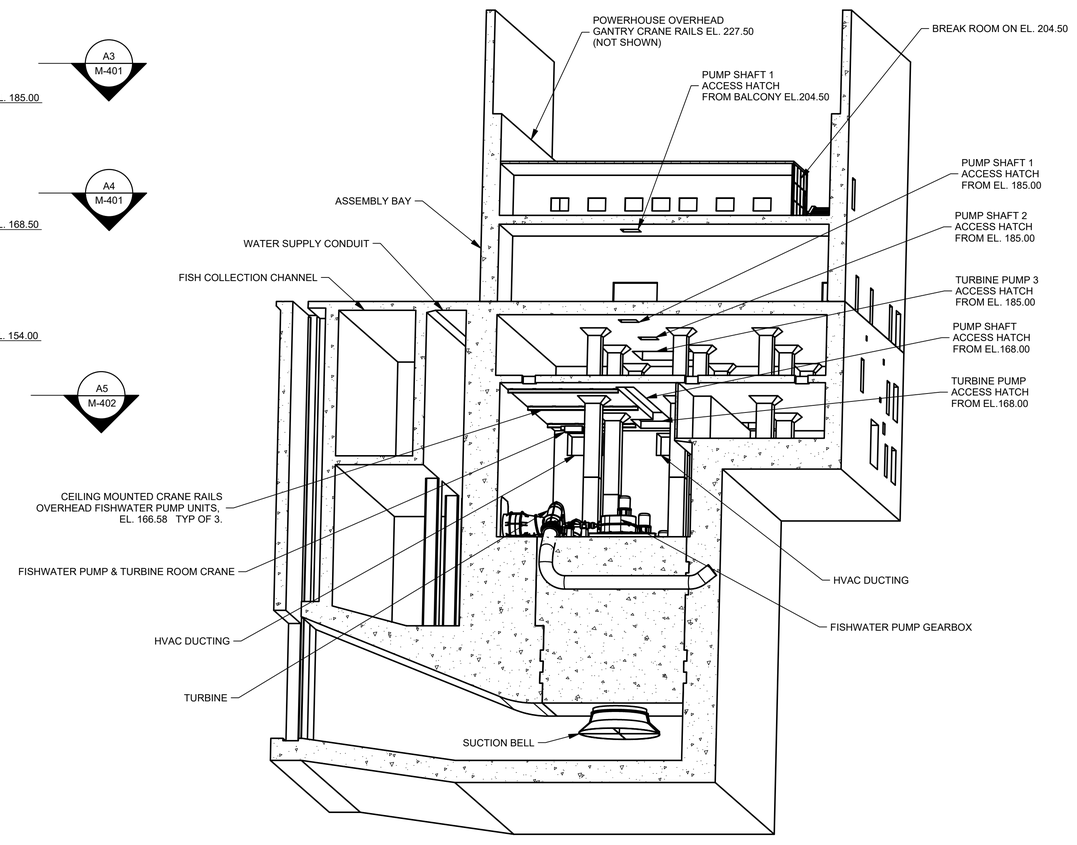

FISH PUMPS & TURBINE ACCESS HATCH LOCATION - ISOMETRIC VIEW

SCALE: NTS

FOR INFORMATION ONLY

US Army Corps of Engineers®

MARK	DESCRIPTION	DATE

DESIGNED BY: D. PENN
DRAWN BY: J. LOVIN
CHECKED BY:
SUBMITTED BY: R. SCUDDERS, P.E.
SIZE: ANSI D
ISSUE DATE: MMMMM YYYY
SOLICITATION NO.: XXXXXX-XX-X-XXXX
CONTRACT NO.: WXXXXX-XX-X-XXX
FILE NO.:

U.S. ARMY CORPS OF ENGINEERS
PORTLAND DISTRICT
333 SW 1ST AVE
PORTLAND, OR 97204-3440

JOHN DAY LOCK AND DAM
SOUTH FISH LADDER
FISH PUMPS EMERGENCY REPAIR

ASSEMBLY BAY ELEVATION VIEW

SHEET ID

M-201

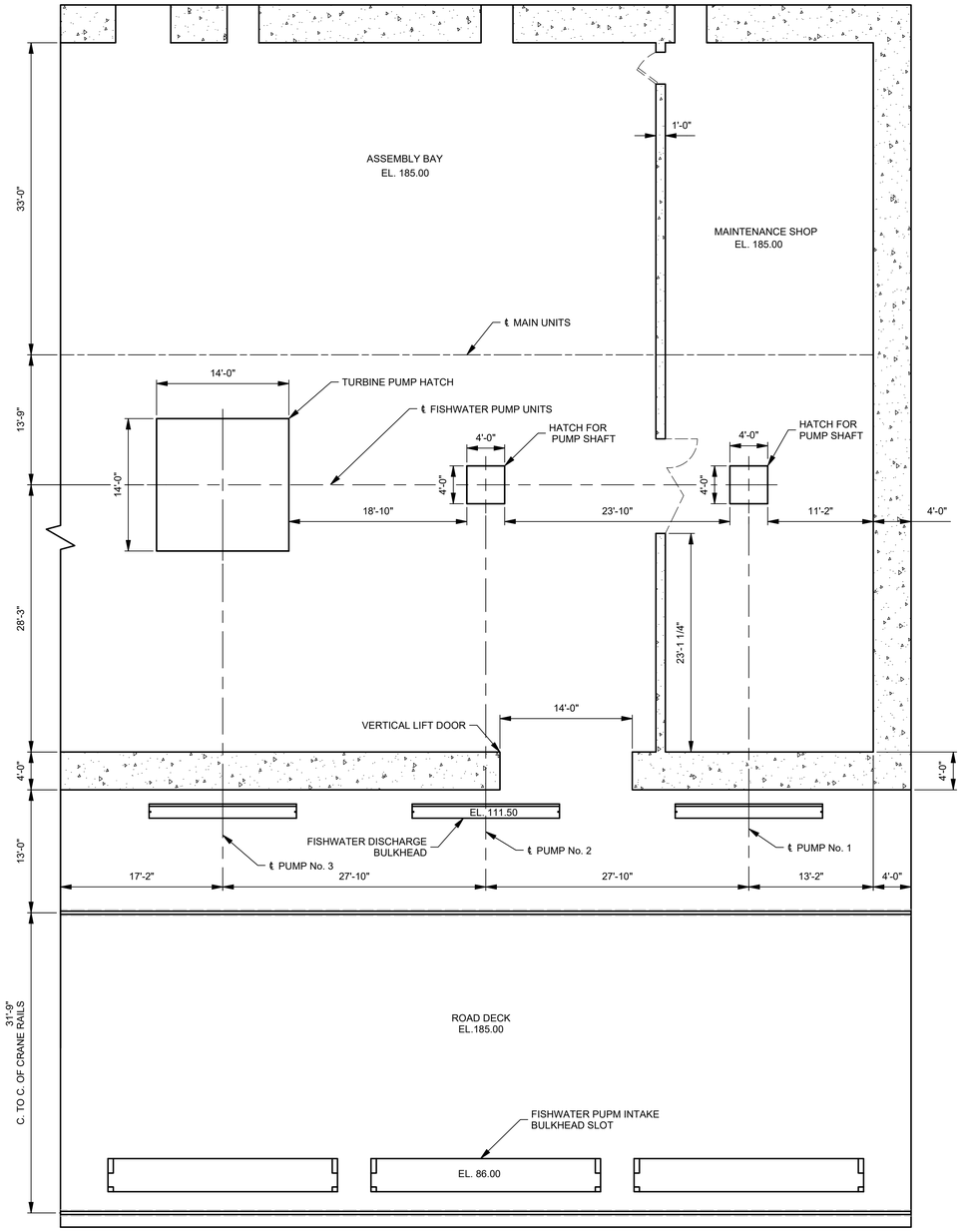

A2 / M-201 — A3 ACCESS HATCH PLAN VIEW EL. 185.00
SCALE: 1/8" = 1'-0" 0 4' 8' 16'

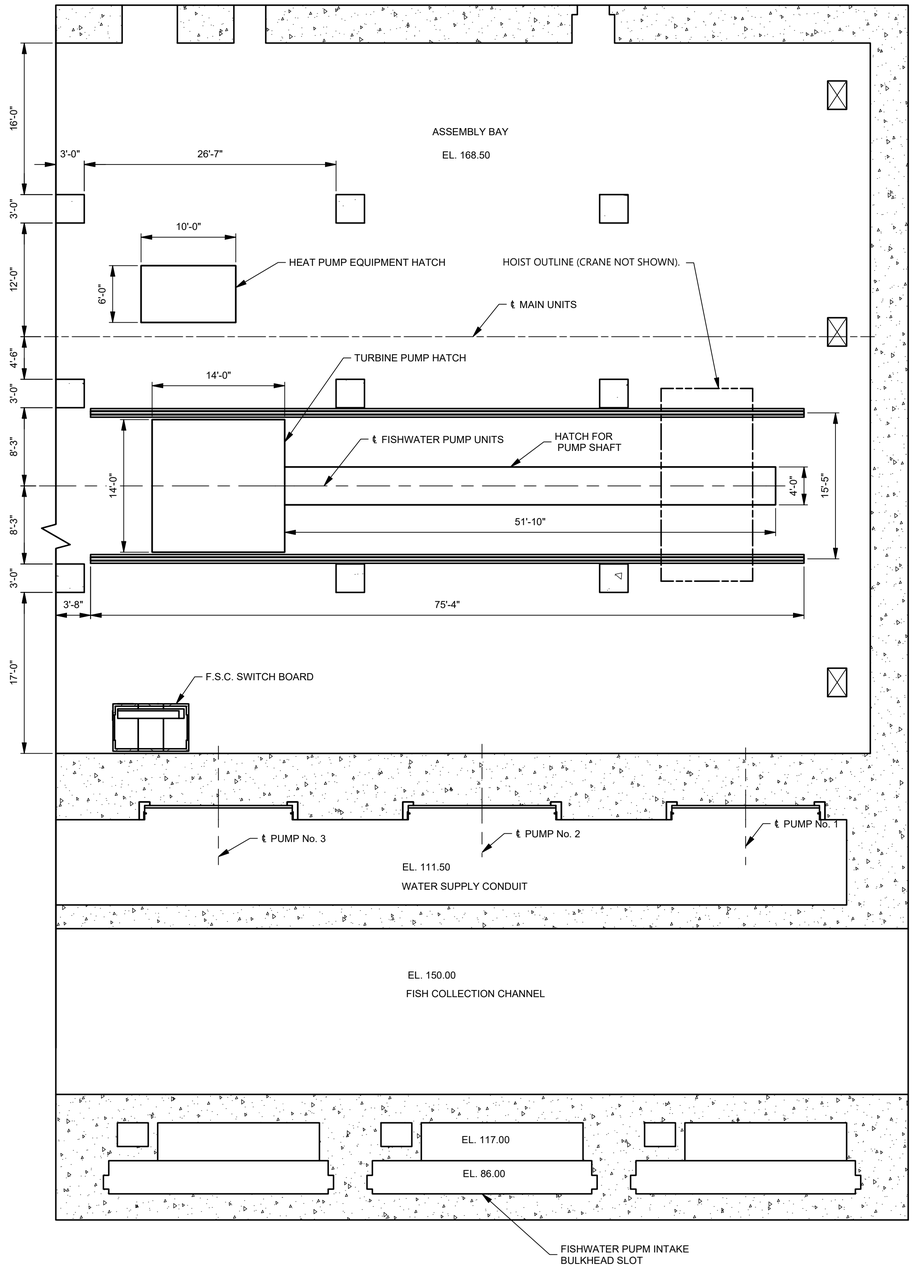

A2 / M-201 — A4 ACCESS HATCH PLAN VIEW EL. 168.50
SCALE: 1/8" = 1'-0" 0 4' 8' 16'

FOR INFORMATION ONLY

US Army Corps of Engineers®

MARK	DESCRIPTION	DATE

DESIGNED BY: D. PENN
DRAWN BY: J. LOVIN
CHECKED BY:
ISSUE DATE: MMMMM YYYY
SOLICITATION NO.: XXXXXX-XX-X-XXXX
CONTRACT NO.: WXXXXX-XX-X-XXX
SUBMITTED BY: BOUDREAU, P.E.
SIZE: ANSI D
FILE NO.:

U.S. ARMY CORPS OF ENGINEERS
PORTLAND DISTRICT
333 SW 1ST AVE
PORTLAND, OR 97204-3440

JOHN DAY LOCK AND DAM
SOUTH FISH LADDER
FISH PUMPS EMERGENCY REPAIR

ASSEMBLY BAY EL. 185.00 AND EL. 168.50
ACCESS HATCH PLAN VIEWS

SHEET ID
M-401

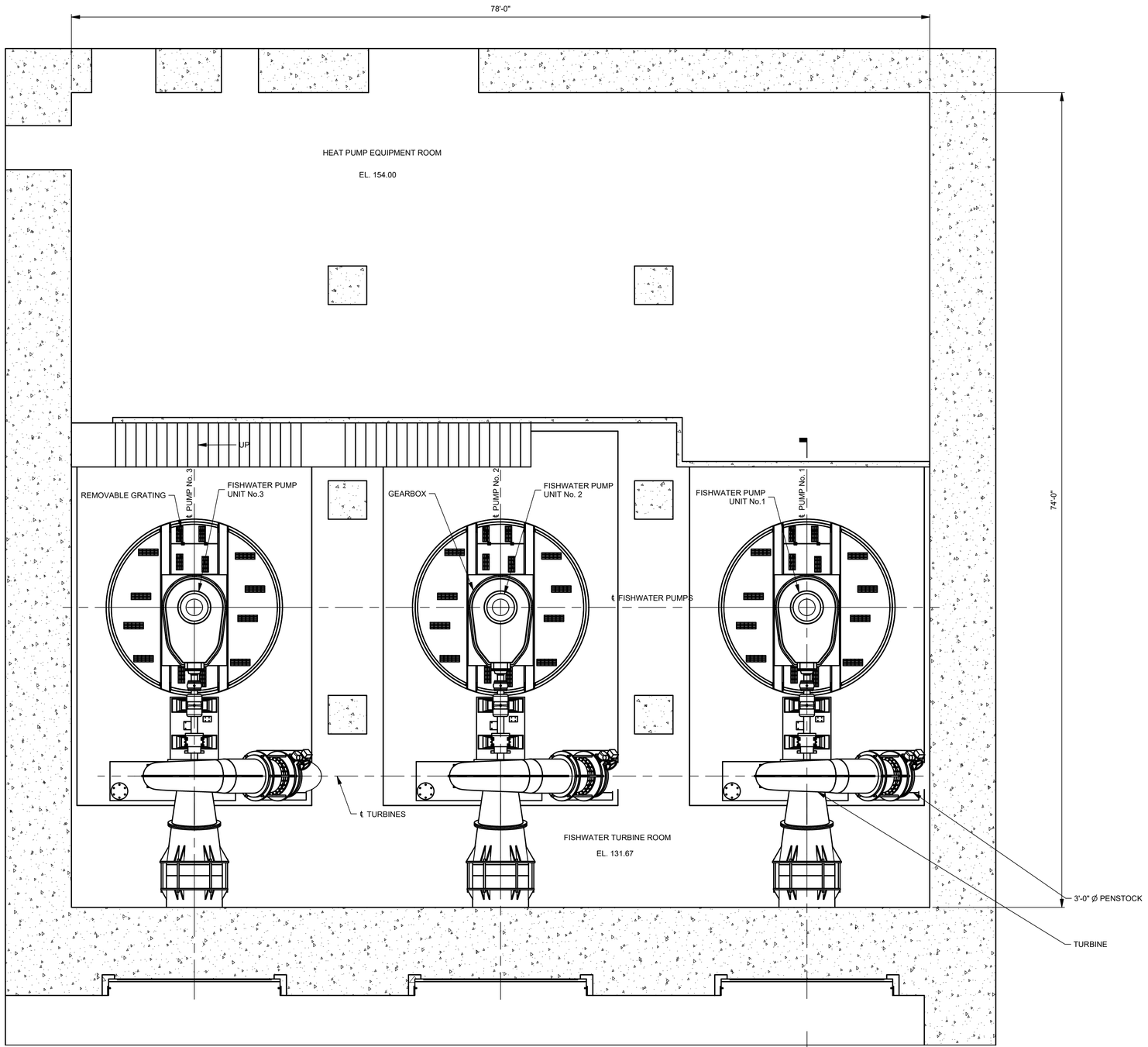

A2 M-201 / A5 TURBINE ROOM PLAN VIEW EL. 131.67

SCALE: 3/16" = 1'-0"

0 4' 8' 12'

FOR INFORMATION ONLY

US Army Corps of Engineers®

MARK	DESCRIPTION	DATE

DESIGNED BY: D. PENN
DRAWN BY: J. LOVIN
CHECKED BY:
ISSUE DATE: MMMMM YYYY
SOLICITATION NO.: XXXXXX-XX-X-XXXX
CONTRACT NO.: WXXXXX-XX-X-XXX
SUBMITTED BY: A. BOUDREAU, P.E.
SIZE: ANSI D
FILE NO.:

U.S. ARMY CORPS OF ENGINEERS
PORTLAND DISTRICT
333 SW 1ST AVE
PORTLAND, OR 97204-3440

JOHN DAY LOCK AND DAM
SOUTH FISH LADDER
FISH PUMPS EMERGENCY REPAIR

ASSEMBLY BAY EL. 131.67
TURBINE ROOM PLAN VIEW

SHEET ID
M-402

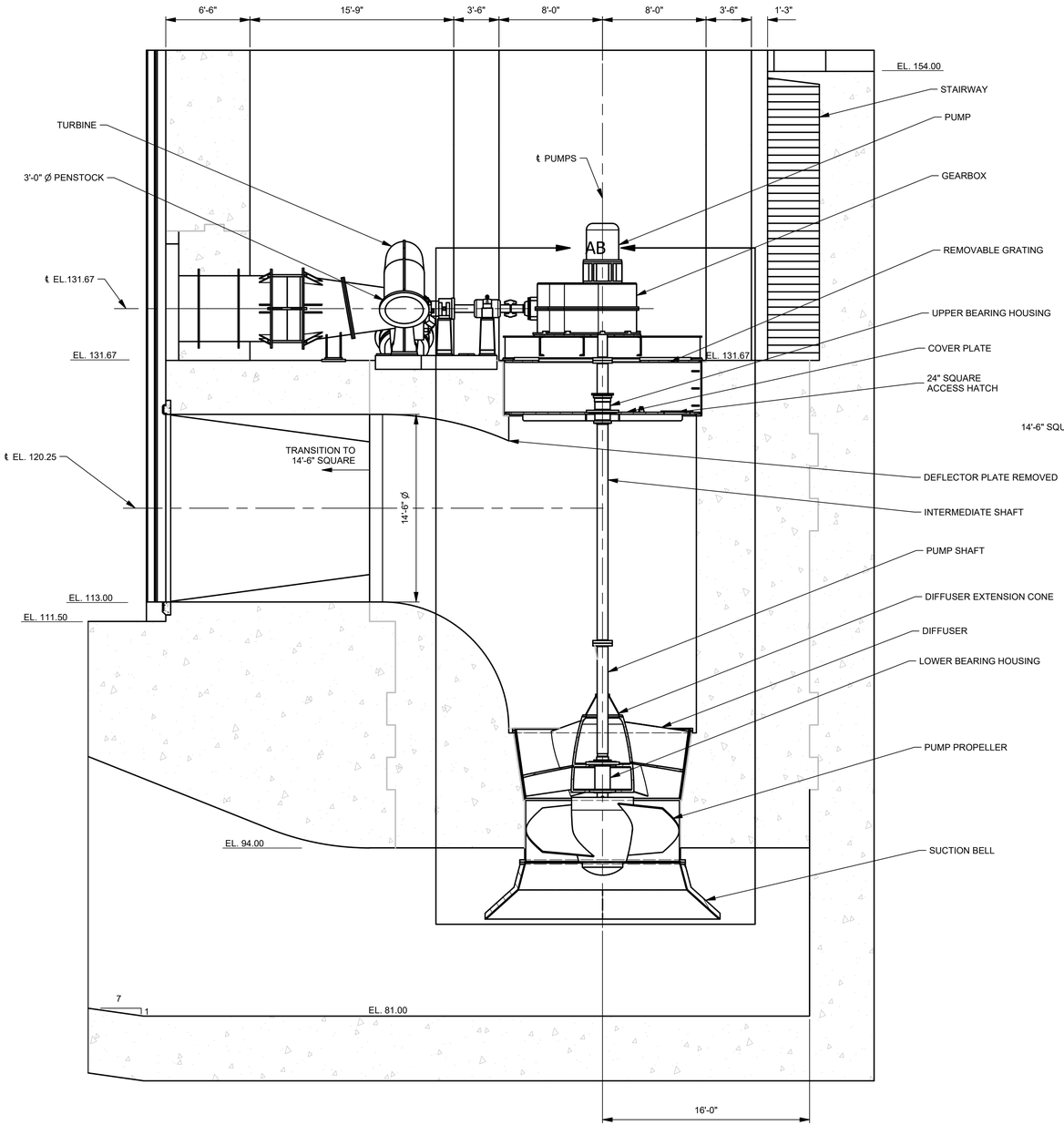

A5 / M-402 — A6 FISH PUMP TYPICAL SECTION VIEW

SCALE: 3/16" = 1'-0"

0 4' 8' 12'

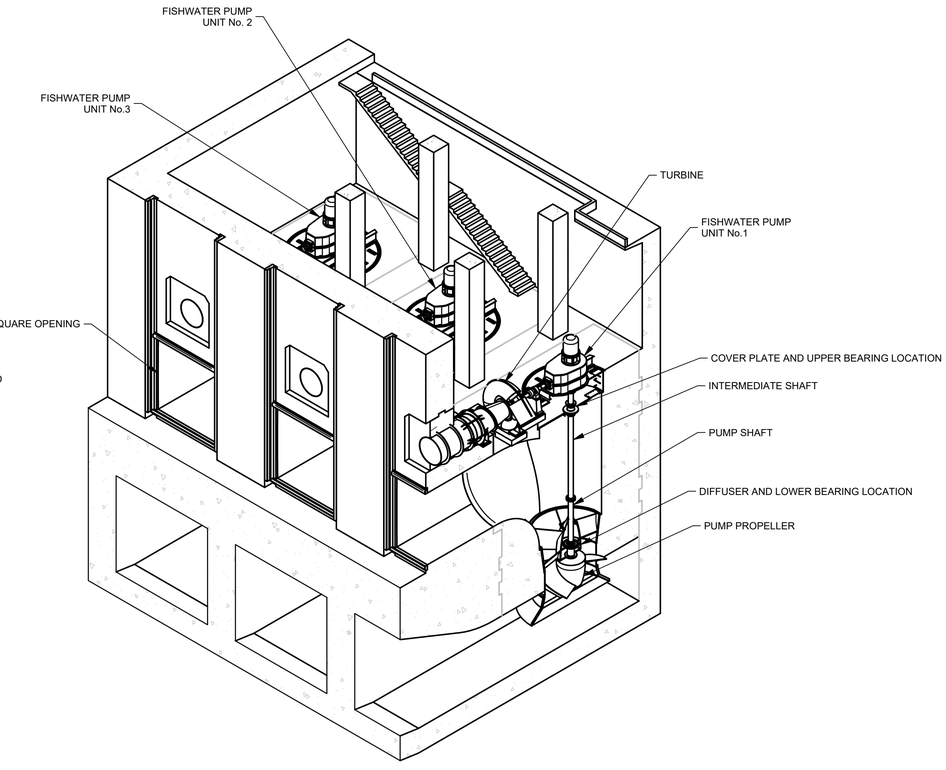

ISOMETRIC VIEW - FISHWATER PUMPS

SCALE: NTS

FOR INFORMATION ONLY

US Army Corps of Engineers®

MARK	DESCRIPTION	DATE

DESIGNED BY: D. PENN
DRAWN BY: J. LOVIN
CHECKED BY:
ISSUE DATE: MMMMM YYYY
SOLICITATION NO.: XXXXXX-XX-X-XXXX
CONTRACT NO.: WXXXXX-XX-X-XXX
SUBMITTED BY: A. BOUDREAU, P.E.
SIZE: ANSI D
FILE NO.:

U.S. ARMY CORPS OF ENGINEERS
PORTLAND DISTRICT
333 SW 1ST AVE
PORTLAND, OR 97204-3440

JOHN DAY LOCK AND DAM
SOUTH FISH LADDER
FISH PUMPS EMERGENCY REPAIR

FISH PUMP
TYPICAL SECTION VIEW

SHEET ID

M-501

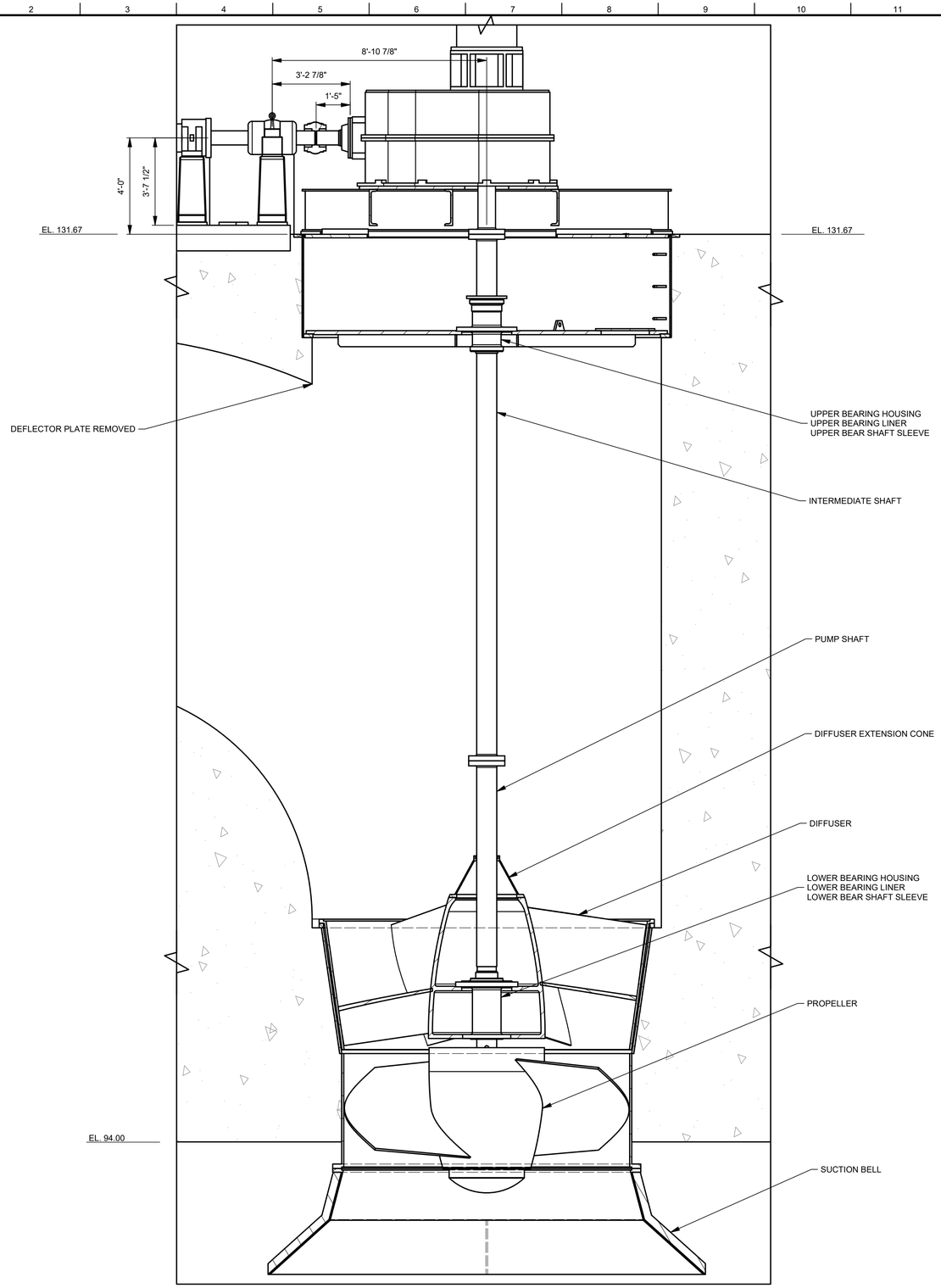

A6 M-501 A7 DETAIL VIEW - UNIT 1

SCALE: 3/8" = 1'-0" 0 2' 4' 6'

FOR INFORMATION ONLY

US Army Corps of Engineers®

MARK	DESCRIPTION	DATE

ISSUE DATE: MMMMM YYYY
SOLICITATION NO.: XXXXXX-XX-X-XXXX
CONTRACT NO.: WXXXXX-XX-X-XXX

DESIGNED BY: D. PENN
DRAWN BY: J. LOVIN
CHECKED BY: B. FILAN
SUBMITTED BY: SOUDERS, P.E.
SIZE: ANSI D
FILE NO.:

U.S. ARMY CORPS OF ENGINEERS
PORTLAND DISTRICT
333 SW 1ST AVE
PORTLAND, OR 97204-3440

JOHN DAY LOCK AND DAM
SOUTH FISH LADDER
FISH PUMPS EMERGENCY REPAIR

FISH PUMP - DETAIL VIEW

SHEET ID
M-502

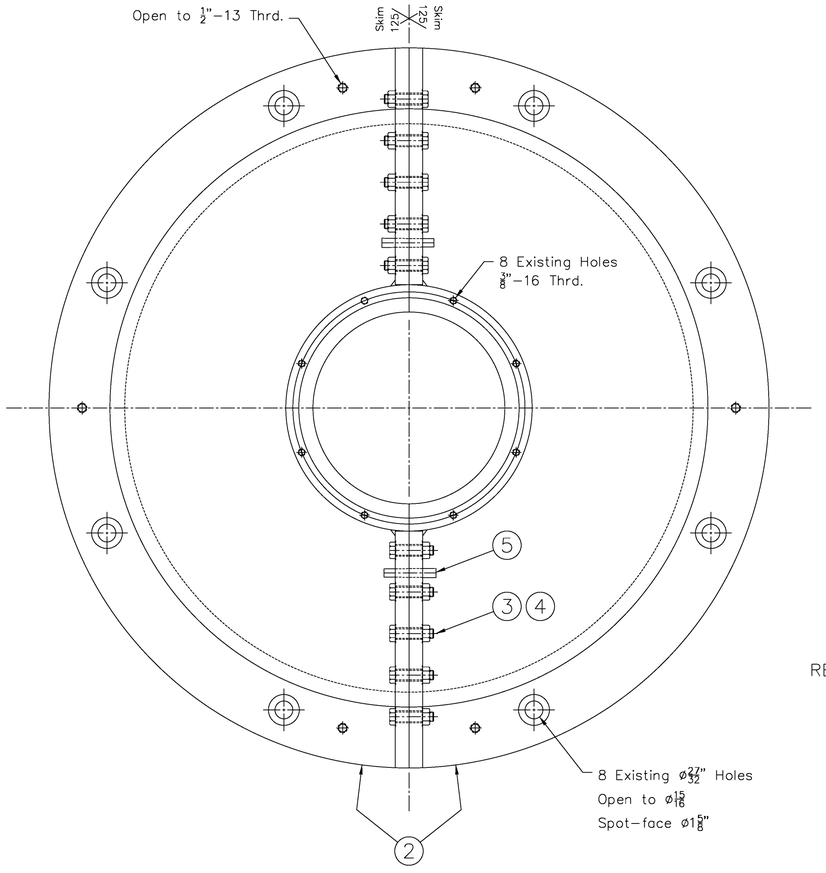

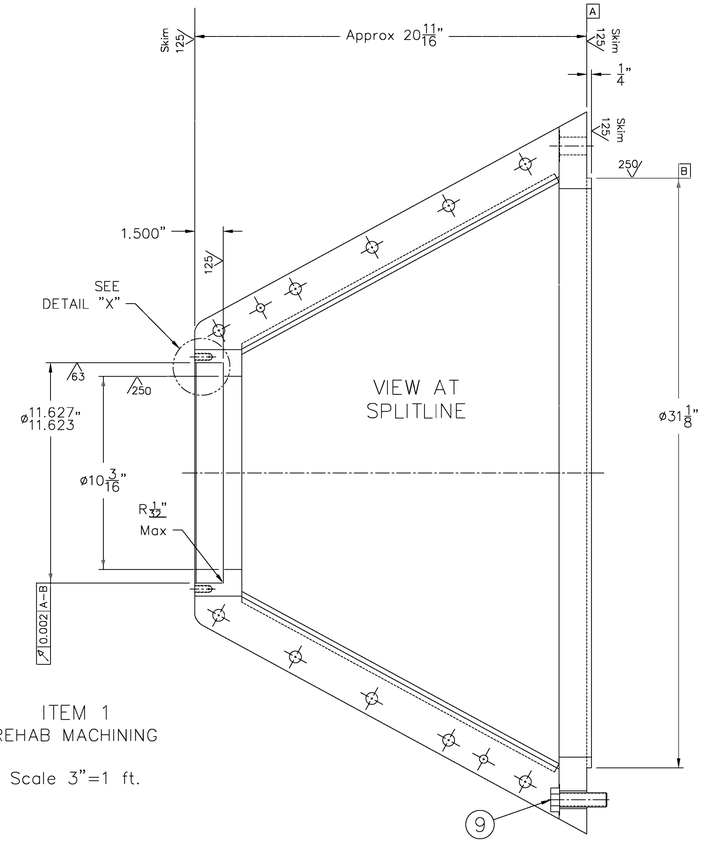

ITEM 1
REHAB MACHINING

Scale 3"=1 ft.

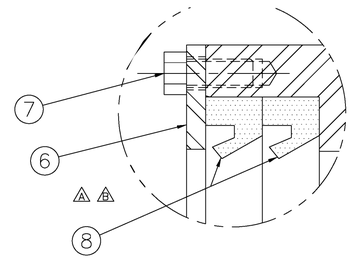

DETAIL "X"
FULL SCALE

AS–CONSTRUCTED

⚠ OUTLINE OF MACHINE WORK:
1.) Align best case to splitlines and take skim cut.
2.) Bolt halves together with bottom surface and upper bore aligned best case.
3.) Machine as given.
4.) Paint System 21–A–Z, Haze Gray Top Coats

TOLERANCES; UNLESS OTHERWISE SPECIFIED
X.XXX= +/–.010"
X.XX= +/–.020"
X.X= +/–.030"
Frac.= +/–1/64"
Angle= +/– 1 Deg.
Break All Edges .005"/.010"
✓ = 125 RMS

FOR INFORMATION ONLY

	QUANTITY	ITEM NO.	PART NAME, TYPE	L.B. EACH	REFERENCE	MATERIAL
	8	9	ø3/4"–10 x 2–1/2" Hvy Hex Bolt	–		18–8 SS, Gr B8
⚠	2	8	Split Seal, 11.625" x 10.000" x 0.750	–		NBR Garlock: 25003–3993
	8	7	ø3/8"–16 x 3/4" HHCS	–		18–8 SS
⚠	1	6	Retainer Plate, Split– REUSE EXISTING	–		Carbon Steel
	2	5	#8 x 2–3/4" Taper Pin	–		Steel
	10	4	ø1/2"–13 Hvy Hex Nut	–		18–8 SS
	10	3	ø1/2"–13 x 2" HHCS	–		18–8 SS Gr B8
	2	2	Diffuser Cone Halves	200		Carbon Steel
	1	1	Diffuser Extension Cone Assembly	(400)		

REVISIONS: C CURRENT REV.

REV.	DATE	BY	CHANGES
A	11/04/11	JRW	–ADDED SECOUND SEAL RING; REUSE EXISTING RETAINER
B	12/04/11	JRW	–CORRECTED INSTALLED DIRECTION OF SEAL SEAL RINGS
C	09/12/12	JRW	–AS–CONSTRUCTED– NO CHANGES FROM REV B

Quality Service Since 1862

PURCHASER, SITE	USACE–PORTLAND JOHN DAY DAM, RUFUS, OR
ORDER NUMBER	R–120627
DATE	10/02/11
DRAWN BY	JR Ward
CHECKED BY	
SCALE	AS NOTED
UNIT NUMBER	W–3036
APPROVED BY	
CONTRACT NO	W9127N–10–C–0029
DRAWING TITLE	EXTENSION CONE DIFFUSER REHAB

The James Leffel & Co.
Manufacturers of
HYDRAULIC TURBINES

CLIN	0143
NEXT ASSEMBLY	SL 11589
DRAWING NUMBER	54122
SHEET SIZE	ANSI–D
SHEET NO OF	1 1

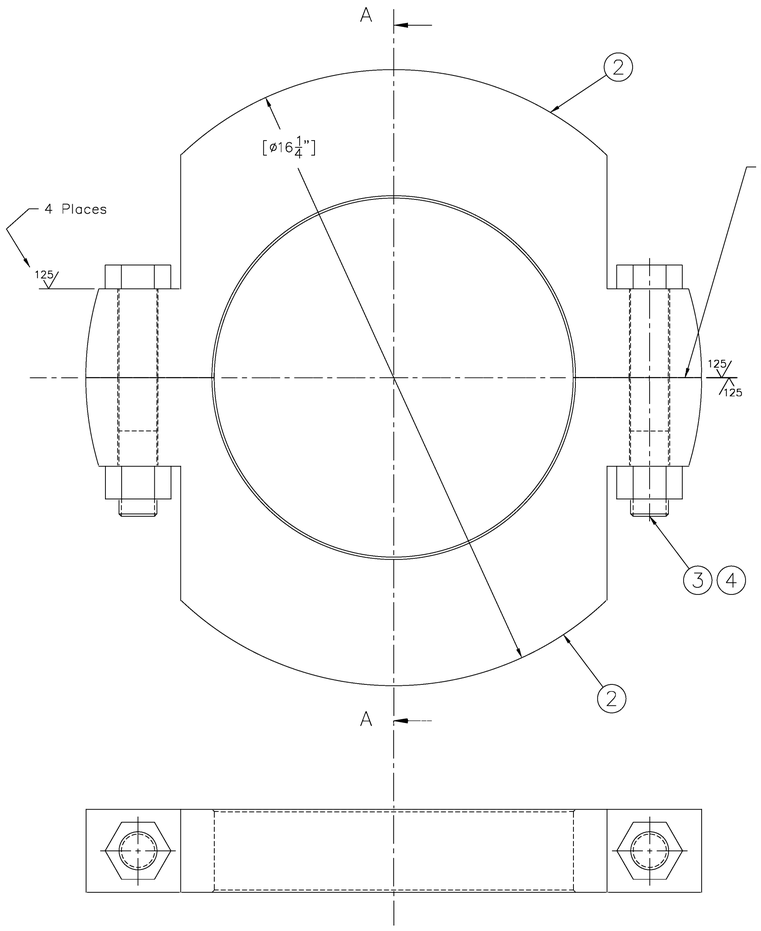

ITEM 1
Refurb Machining
Scale 6"=1 ft

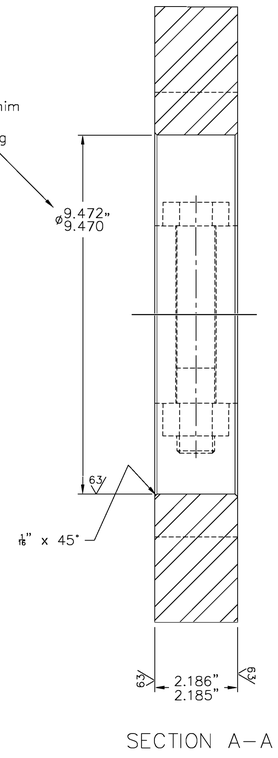

SECTION A–A

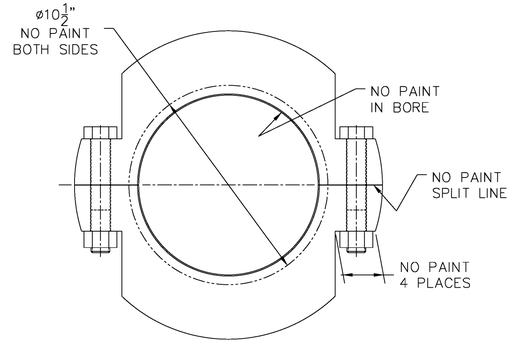

ITEM 1
PAINTING
Scale– 3"=1 ft

Paint Haze Gray per
09 97 02.00 26

AS–CONSTRUCTED

FOR INFORMATION ONLY

TOLERANCES; UNLESS
OTHERWISE SPECIFIED
X.XXX= +/–.010"
X.XX= +/–.020"
X.X= +/–.030"
Frac.= +/–1/64"
Angle= +/– 1 Deg.
Break All Edges .005"/.010"
√ = 125 RMS

QUANTITY	ITEM NO.	PART NAME, TYPE	LB. EACH	REFERENCE	MATERIAL
2	4	ø1"-8 Hex Nut	70		Grade 8, Zinc PL (MCMaster: 94895A038)
2	3	ø1"-8 x 6" HHCS	–		Grade 8, Zinc PL (McMaster: 91257A969)
2	2	Propeller Support Ring Halves	70		Carbon Steel –
1	1	Propeller Support Ring Assembly	(140)		Carbon Steel –

CURRENT REV: A

REVISIONS

REV.	DATE	BY	CHANGES
A	09/12/12	JRW	-AS-CONSTRUCTED- NO CHANGES FROM REV -

Quality Service Since 1862

USACE-PORTLAND
JOHN DAY DAM, RUFUS, OR
PURCHASER, SITE

R-120627
ORDER NUMBER

DATE: 09/20/11
DRAWN BY: JR Ward
CHECKED BY:
SCALE: AS NOTED
UNIT NUMBER: W-3036
APPROVED BY:

CONTRACT NO: W9127N-10-C-0029

DRAWING TITLE
PROPELLER SUPPORT RING
REFURBISHMENT

The James Leffel & Co.
Manufacturers of
HYDRAULIC TURBINES

CLIN: 0142
NEXT ASSEMBLY: –

DRAWING NUMBER: 54124

SHEET SIZE: ANSI-D
SHEET NO: 1 OF 1

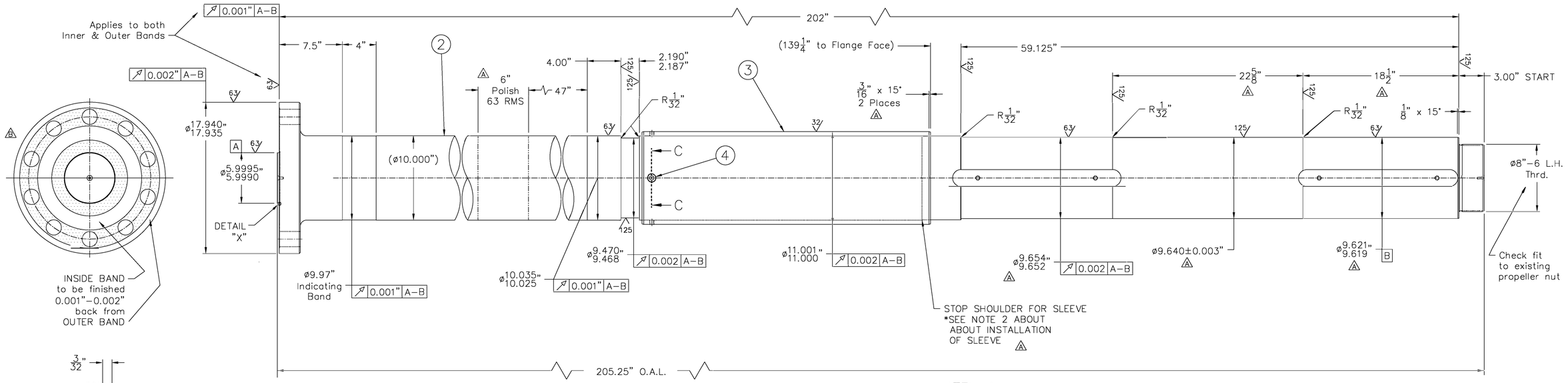

SEE SHEET 2 for ADDITIONAL DETAILS and FINISHED DIMENSIONS

ITEM 1
PUMP SHAFT w/SLEEVE
FINAL–MACHINING
Scale: 2"=1 ft.

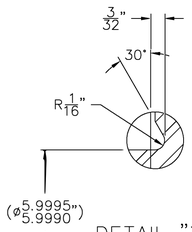

DETAIL "X"
Scale 24"=1 ft.

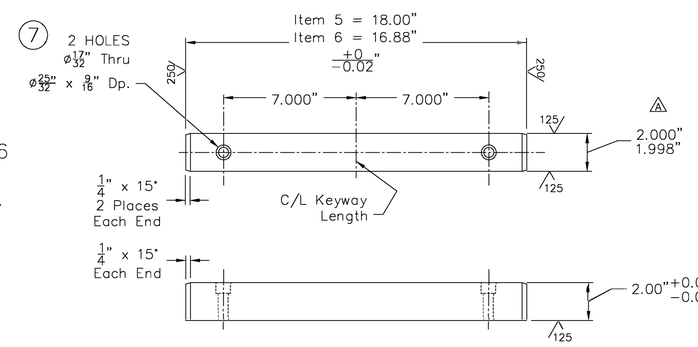

ITEMS 5 & 6
Shaft Keys
Scale 3"=1 ft.

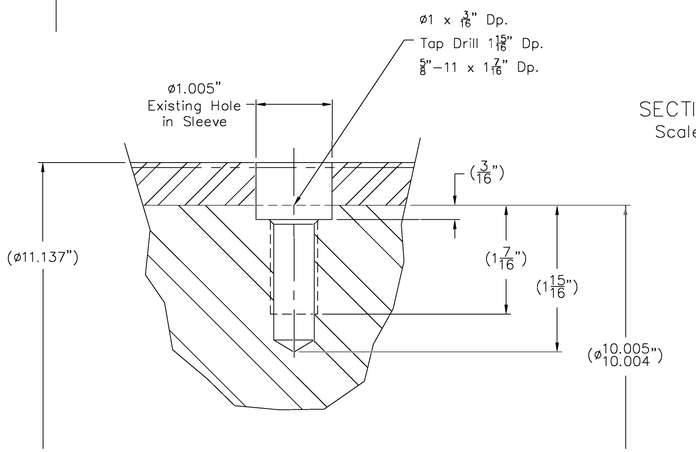

SECTION C–C
Scale– FULL

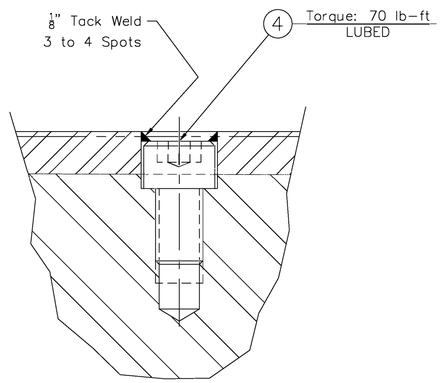

QUANTITY	ITEM NO.	PART NAME, TYPE	LB. EACH	REFERENCE	MATERIAL
4	7	ø1/2"-13 x 2-1/4" SHCS	–		Alloy Steel– ASTM A574 McMaster: 91251A721
2	6	2" SQ x 16.88" Lg. Key	19		Carbon Steel Oversize
2	5	2" SQ x 18" Lg. Key	20		Carbon Steel Oversize
1	4	ø5/8"-11 x 1" SHCS	–		Stainless 18–8
1	3	Shaft Sleeve– GSM	150		Stainless 400 Series
1	2	Pump Shaft– NEW	4,500		Carbon Steel Forging ASTM A6689 CL D
1	1	Pump Shaft/Sleeve Assembly	(4,650)		–

AS–CONSTRUCTED

REV.	DATE	BY	CHANGES
A	09/30/11	JRW	–CORRECTED NOTES PER TRANS 48 13 13.12 26–10 –FINALIZED DIAMETERS BASED UPON PROPELLER BORES –18–1/2" WAS 18", 22–5/8" WAS 23–1/8" –ADDED 3/16" x 15° LEADS & POLISH AREA –COORECT KEY WIDTH TO MEET ANSI B17.1, CL 2 FIT
B	10/17/11	JRW	–CORRECTED NUMBER OF FLANGE HOLES SHOWN TO 10
C	09/12/12	JRW	–AS–CONSTRUCTED– NO CHANGES FROM REV B

CURRENT REV: C

DATE	DRAWN BY	CHECKED BY
06/13/11	JR Ward	
SCALE: AS NOTED	UNIT NUMBER: W–3036	APPROVED BY

CONTRACT NO: W9127N–10–C–0029
DRAWING TITLE: PUMP SHAFT WITH SLEEVE FORGE and MACHINE
PURCHASER, SITE: USACE–PORTLAND JOHN DAY DAM, RUFUS, OR
ORDER NUMBER: R–120627

Quality Service Since 1862

The James Leffel & Co.
Manufacturers of
HYDRAULIC TURBINES

CLIN: 0105
NEXT ASSEMBLY: WORTHINGTON SL11589
DRAWING NUMBER: 54192
SHEET SIZE: ANSI–D
SHEET NO OF: 1 3

4.) Shaft to be painted per drawing 54220.
3.) Shaft to be 100 P/T'd after final machining
2.) SLEEVE INSTALL
Item 3 Sleeve to be heated to achieve a clearance of 0.020" to shaft. AVOID DIRECT FLAME ONTO SLEEVE.
– The sleeve is designed to stop against the shoulder between the 9.935" and 10.005" diameters (See Sheet 2), however care needs taken in pushing sleeve against shoulder, as ledge is shallow.
– Also here, hold sleeve against ledge until cool. Also, be sure sleeve is oriented in correct direct (See Sheet 2)
– Spot–face, drill, tap, and install Item 4, ø5/8" SHCS per Section "C–C".
1.) See Sheet 2 for further machining and details. See Sheet 3 for forging.
NOTES:

TOLERANCES; UNLESS OTHERWISE SPECIFIED
X.XXX= +/–.010"
X.XX= +/–.020"
X.X= +/–.030"
Frac.= +/–1/64"
Angle= +/– 1 Deg.
Break All Edges .005"/.010"
√ = 125 RMS

FOR INFORMATION ONLY

This pre-machining finishes the overall length, sleeve fit area, keyways, holes, flange face reliefs, back side of flange, 10.00" diameter, and relief where threads meets shoulder

EXCEPT AS GIVEN;
F.A.O. 250

ITEM 2
PUMP SHAFT
PRE-MACHINING
Scale: 2"=1 ft.

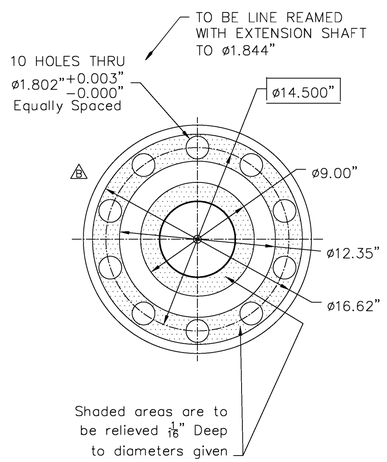

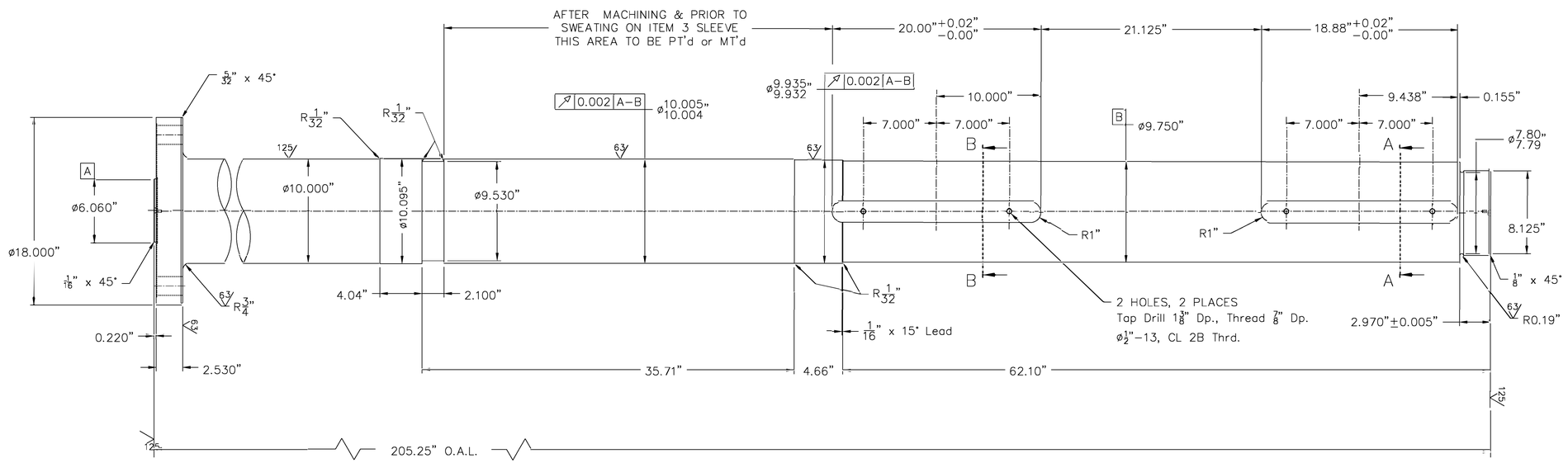

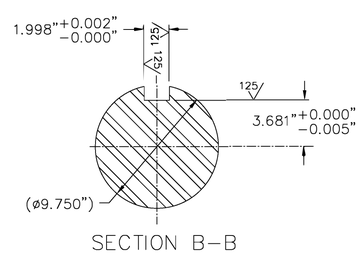

SECTION B-B

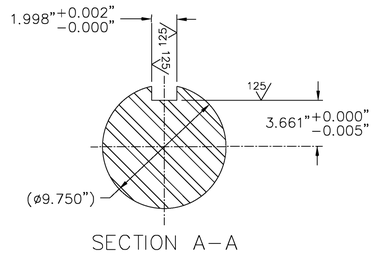

SECTION A-A

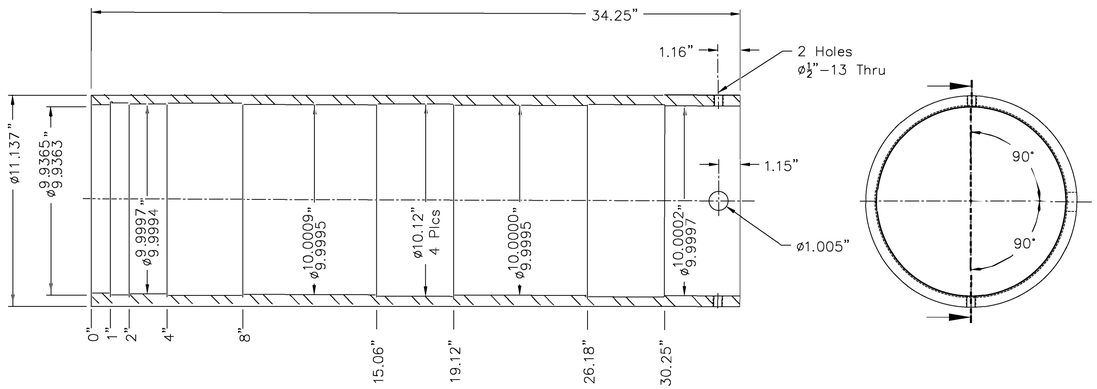

ITEM 3
GOVERNMENT SUPPLIED SLEEVE
AS SUPPLIED DIMENSIONS
Scale: 3"=1 ft.

AS-CONSTRUCTED

TOLERANCES; UNLESS OTHERWISE SPECIFIED
X.XXX= +/-.010"
X.XX= +/-.020"
X.X= +/-.030"
Frac.= +/-1/64"
Angle= +/- 1 Deg.
Break All Edges .005"/.010"
√ = 125 RMS

FOR INFORMATION ONLY

** SEE SHEET 1 FOR PARTS/MATERIAL LIST **

QUANTITY	ITEM NO.	PART NAME, TYPE	LB. EACH	REFERENCE	MATERIAL

REVISIONS

REV	DATE	BY	CHANGES
A	09/30/11	JRW	SEE SHEET 1
B	10/17/11	JRW	SEE SHEET 1
C	09/12/12	JRW	SEE SHEET 1

CURRENT REV

Quality Service Since 1862

DATE 06/13/11 | DRAWN BY JR Ward | CHECKED BY

SCALE AS NOTED | UNIT NUMBER W-3036 | APPROVED BY

The James Leffel & Co.
Manufacturers of
HYDRAULIC TURBINES

CONTRACT NO W9127N-10-C-0029

CLIN 0105 | NEXT ASSEMBLY SHEET 1

DRAWING TITLE
PUMP SHAFT
WITH SLEEVE
FORGE and MACHINE

DRAWING NUMBER 54192

USACE-PORTLAND
JOHN DAY DAM, RUFUS, OR
PURCHASER, SITE

R-120627
ORDER NUMBER

SHEET SIZE ANSI-D | SHEET NO 2 OF 3

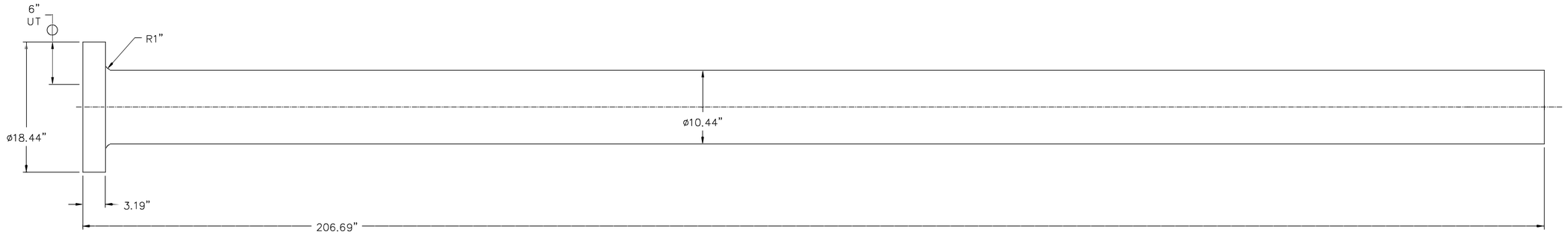

- All dimensions tolerance= $+\frac{1}{16}"/-0"$
- Shaft to be made according to ASTM A668, Class D
- Dimensions allow $\frac{7}{32}"$ stock per surface for finishing
- Test specimens per ASTM A668
- NDT requirements
  - 100 MT
  - UT in the flange area as shown

ITEM 1
FORGING & ROUGH TURNED DETAIL

Scale 1½"=1 ft.

Rough Turned Weight: 5,225 lbs

** SEE SHEET 1 FOR PARTS/MATERIAL LIST **

AS-CONSTRUCTED

FOR INFORMATION ONLY

TOLERANCES; UNLESS OTHERWISE SPECIFIED
X.XXX= +/-.010"
X.XX= +/-.020"
X.X= +/-.030"
Frac.= +/-1/64"
Angle= +/- 1 Deg.
Break All Edges .005"/.010"
✓= 125 RMS

QUANTITY	ITEM NO.	PART NAME, TYPE	LB. EACH	REFERENCE	MATERIAL

CURRENT REV. C

REVISIONS

REV.	DATE	BY	CHANGES
A	09/30/11	JRW	SEE SHEET 1
B	10/17/11	JRW	SEE SHEET 1
C	09/12/12	JRW	SEE SHEET 1

Quality Service Since 1862

DATE	DRAWN BY	CHECKED BY
03/03/11	JR Ward	

SCALE	UNIT NUMBER	APPROVED BY
AS NOTED	W-3036	

The James Leffel & Co.
Manufacturers of
HYDRAULIC TURBINES

CONTRACT NO: W9127N-10-C-0029

CLIN: 105

NEXT ASSEMBLY: Sheet 2

DRAWING TITLE:
PUMP SHAFT
WITH SLEEVE
FORGE and MACHINE

DRAWING NUMBER: 54192

SHEET SIZE: ANSI-D

SHEET NO. 3 OF 3

PURCHASER, SITE: USACE-PORTLAND JOHN DAY DAM, RUFUS, OR

ORDER NUMBER: R-120627

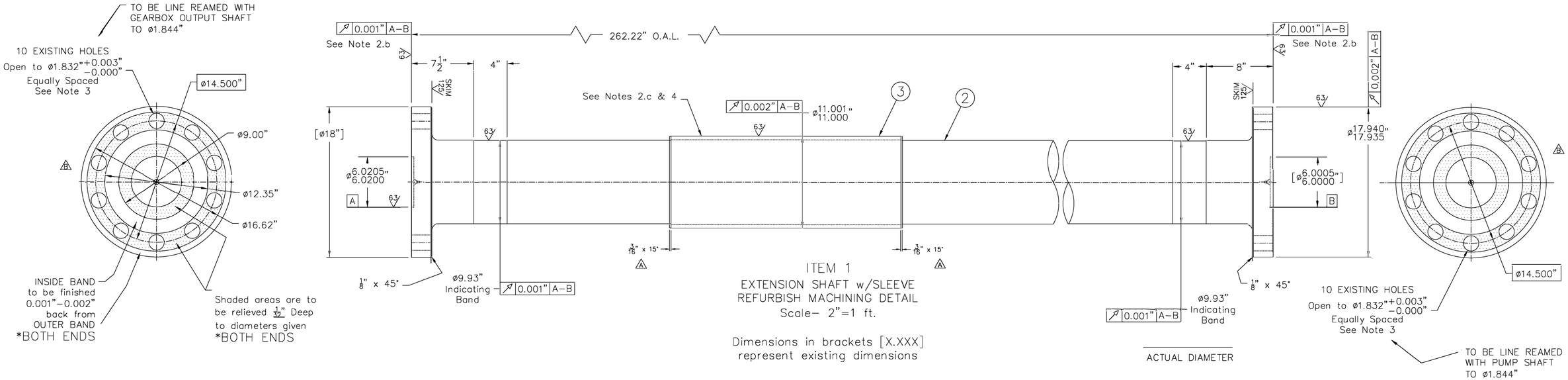

ITEM 1
EXTENSION SHAFT w/SLEEVE
REFURBISH MACHINING DETAIL
Scale– 2"=1 ft.

Dimensions in brackets [X.XXX] represent existing dimensions

ACTUAL DIAMETER

OUTLINE OF WORK:
1.) Weld sleeve to shaft per Weld Detail
2.) Machine shaft complete per Final Machining Detail.
   a.) Work to be true to previously machined diameter "A" and existing diameter "B"
   b.) Flange faces are to be finished after cutting of 1/32" deep relief areas.
   c.) Longitudinal welds to be visually and shop dye checked at 0.06" from finish
3.) Existing ø1 3/4" flange hole patterns to be balanced out best case before boring on a true bolt circle to the dimensions given.
4.) Sleeve to be 100% P/T'd after final machining
5.) Shaft to be painted per drawing 54220.

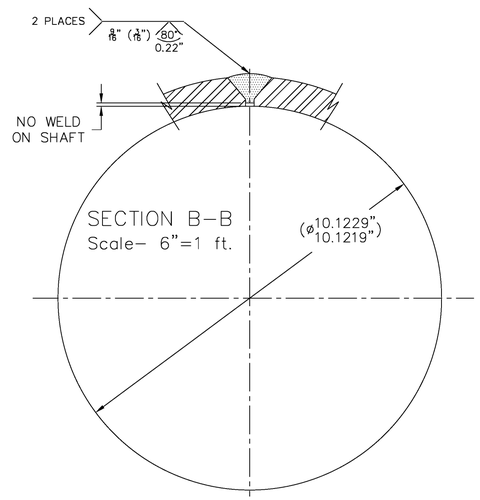

WELD PROCEDURE:
1.) Place sleeve halves on shaft equaling out the root openings
2.) Clamp over sleeve 2 to 3 places to hold to shaft
3.) Pre–heat 150–200° C
4.) Weld using 309L filler metal
   ** DO NOT WELD TO SHAFT ALONG LONGITUDINAL WELD
5.) Perform shop dye check of as–welded condition

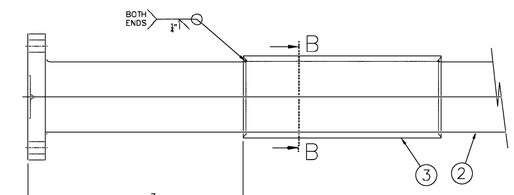

ITEM 1
EXTENSION SHAFT w/SLEEVE
WELD DETAIL
Scale– 1 1/2"=1 ft.

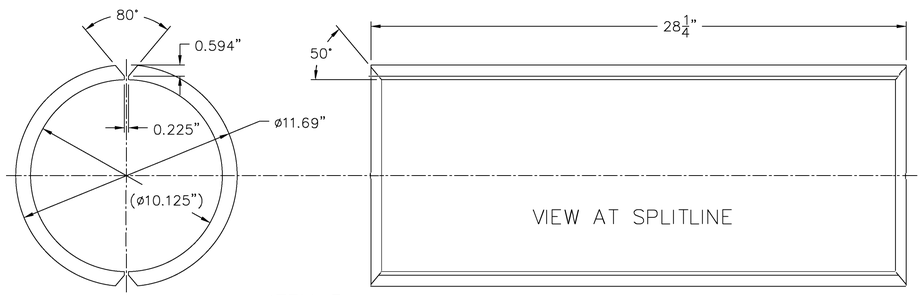

ITEM 3
GOVERNMENT SUPPLIED SLEEVE (SPLIT)
AS SUPPLIED DIMENSIONS
Scale– 3"=1 ft.

AS–CONSTRUCTED

TOLERANCES; UNLESS OTHERWISE SPECIFIED
X.XXX= +/–.010"
X.XX= +/–.020"
X.X= +/–.030"
Frac.= +/–1/64"
Angle= +/– 1 Deg.
Break All Edges .005"/.010"
✓ = 125 RMS

FOR INFORMATION ONLY

QUANTITY	ITEM NO.	PART NAME, TYPE	L.B. EACH	REFERENCE	MATERIAL
1	3	Shaft Sleeve, Split	215		Stainless Steel AISI 420
1	2	Pump Extension Shaft– Refurb Exsitng	6,050		Carbon Steel Forging ASTM A235 CL E
1	1	Pump Extension Shaft/Sleeve Assembly	(6,265)		

CURRENT REV. C

REVISIONS	REV.	DATE	BY	CHANGES
	A	09/30/11	JRW	–3/16" x 15° CHAMFERS WAS 1/16" x 45°
	B	10/17/11	JRW	–CORRECTED NUMBER OF FLANGE HOLES SHOWN TO 10
	C	09/12/12	JRW	–AS–CONSTRUCTED– NO CHANGES FROM REV B

Quality Service Since 1862

DATE 06/13/11	DRAWN BY JR Ward	CHECKED BY
SCALE AS NOTED	UNIT NUMBER W–3036	APPROVED BY

The James Leffel & Co.
Manufacturers of
HYDRAULIC TURBINES

USACE–PORTLAND
JOHN DAY DAM, RUFUS, OR
PURCHASER, SITE

R–120627
ORDER NUMBER

CONTRACT NO: W9127N–10–C–0029

DRAWING TITLE
EXTENSION SHAFT
WITH SLEEVE
REFURB EXISITNG

CLIN 0106
NEXT ASSEMBLY WORTHINGTON SL 11589
DRAWING NUMBER 54193
SHEET SIZE ANSI–D
SHEET NO 1 OF 1

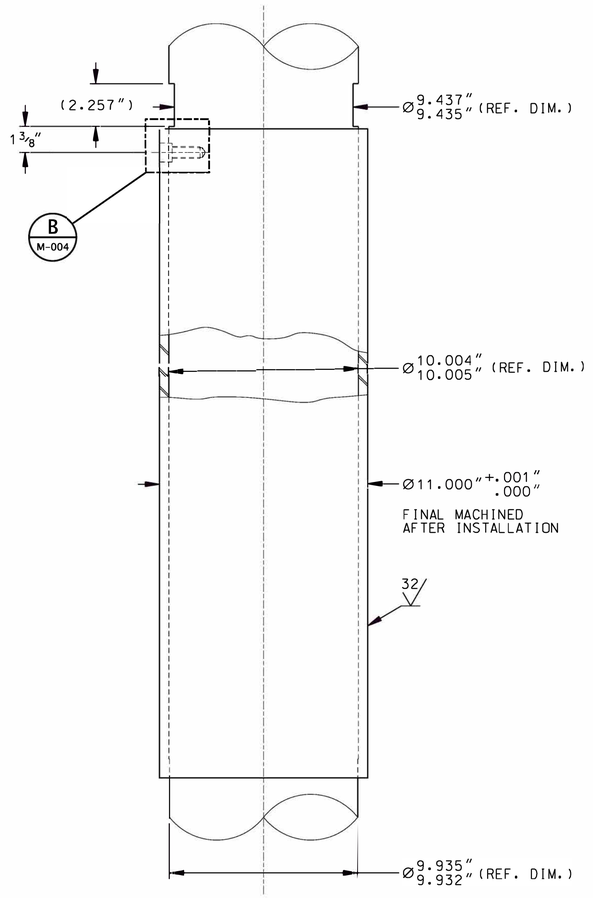

LOWER SLEEVE
INSTALLED ON SHAFT
NOT TO SCALE

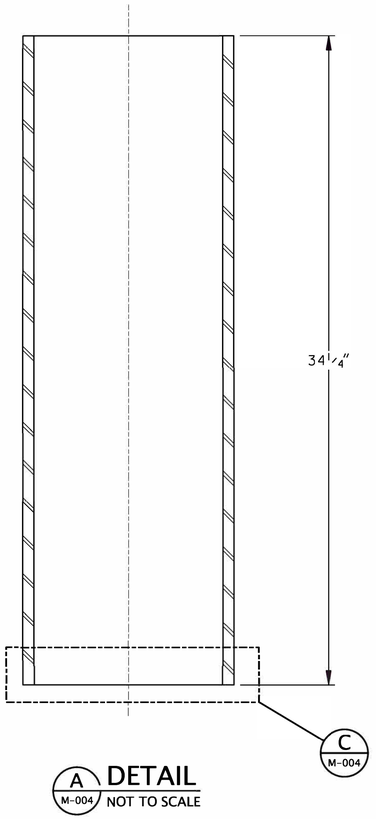

A M-004 DETAIL
NOT TO SCALE

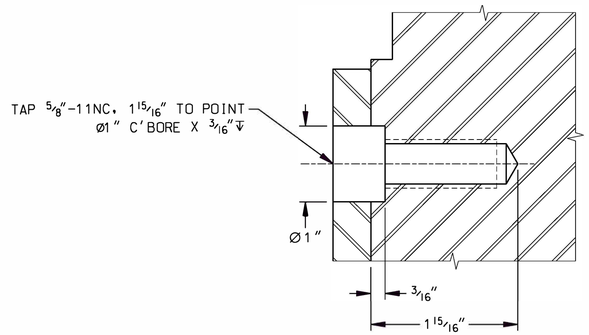

B M-004 DETAIL
NOT TO SCALE

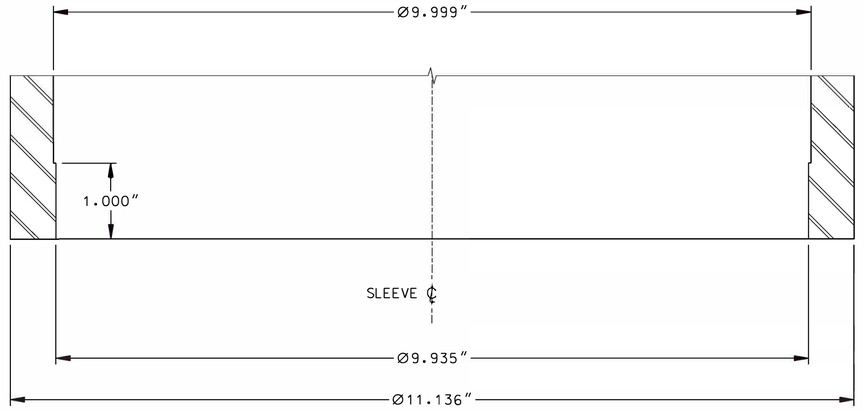

C M-004 DETAIL
NOT TO SCALE

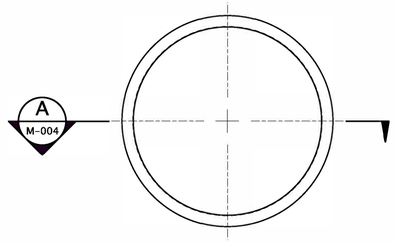

REPLACEMENT STAINLESS STEEL
SLEEVE FOR LOWER BEARING
NOT TO SCALE

NOTES:

1. THE SLEEVE IS TO BE HEATED UNTIL A CLEARANCE OF AT LEAST 0.020" IS ATTAINED.
2. QUICKLY SLIDE SLEEVE ONTO SHAFT AND ALIGN VERTICALLY AND ROTATE TO ALIGN DOWEL.
3. HOLD POSITION UNTIL SLEEVE COOLS AND GRIPS SHAFT.
4. INSTALL BOLT DOWEL WITH THE SHEAR SURFACE AT THE BOLT HEAD.
5. MACHINE TO FINAL DIMENSIONS WITH SURFACE FINISH OF 32 RMS.

FOR INFORMATION ONLY

US Army Corps of Engineers® Portland District

MARK	DESCRIPTION	DATE	APPR.

U. S. ARMY CORPS OF ENGINEERS
PORTLAND DISTRICT
PORTLAND, OREGON

U.S. ARMY CORPS OF ENGINEERS
HYDROELECTRIC DESIGN CENTER
PORTLAND, OREGON
CENWP-HDC

DESIGNED BY: DAN WATSON
DWN BY: G2HDCKRI
CKD BY: C. BROWN
SUBMITTED BY: BRENT L. MAHAN
PLOT SCALE: HALF SCALE
PLOT DATE: 2/15/2011
SIZE: ANSI-D
FILE NAME: M-03-1.103-JDP-004-C.dgn
DATE: February 18, 2011
SOLICITATION NO.: W9127N-07-B-####
CONTRACT NO.: CONTRACT NUMBER
DRAWING NUMBER: JDP-1J03-3-4/4

COLUMBIA RIVER OREGON, WASHINGTON
JOHN DAY LOCK AND DAM
POWERHOUSE
SOUTH SHORE FISH PUMP REHAB

FISH PUMP LOWER
BEARING SLEEVE

SHEET IDENTIFICATION
M-004
SHEET OF

DESIGN FILE: Y:\PROJECTS\JOHN DAY-CENWP\FISH TURBINE - PUMPS\DESIGN-PHASE\DRAWINGS\FISH PUMPS\M-03-1.103-JDP-004-C.DGN

DRAWING PLOT SIZE: ANSI D | DATE AND TIME PLOTTED: 2/15/2011 2:38:02 PM | BY USERNAME: G2HDCKRI (KEVIN R. IMHOLT) | SHEET NAME: M-004

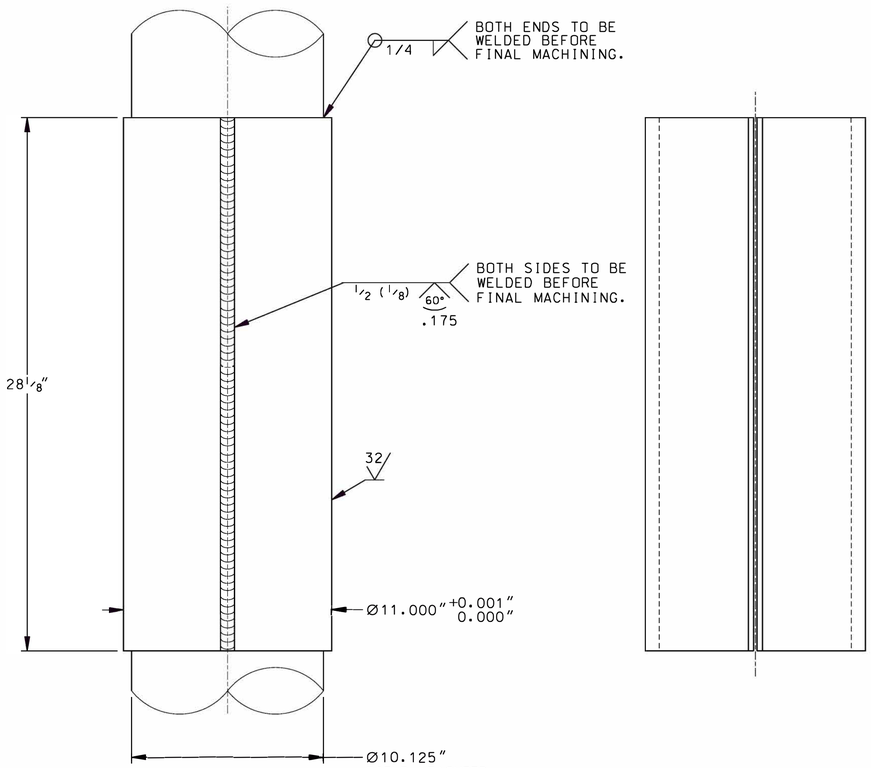

UPPER SLEEVE
INSTALLED ON SHAFT
NOT TO SCALE

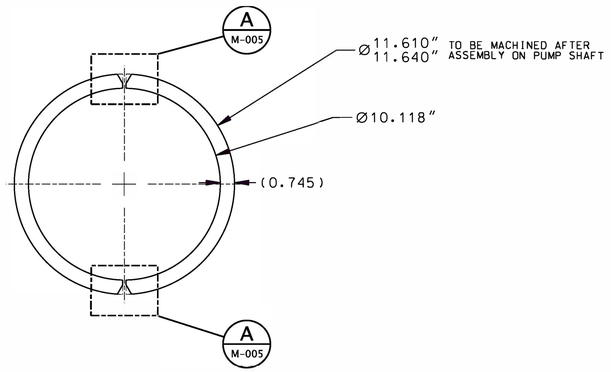

REPLACEMENT STAINLESS STEEL
SLEEVE FOR UPPER BEARING
NOT TO SCALE

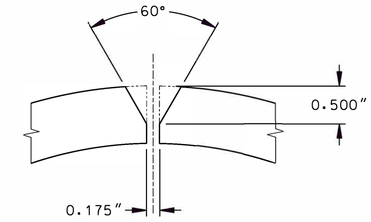

A M-005 DETAIL – WELD PREP.
NOT TO SCALE

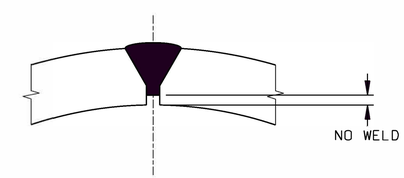

A M-005 DETAIL – WELD
NOT TO SCALE

NOTES:

1. THE SLEEVE HALVES ARE TO BE HEATED BEFORE INSTALLATION AND CLAMPED TO SHAFT IN TWO PLACES.
2. USING APPROVED WELD PROCEDURE, WELD THE TWO HALVES TOGETHER.
3. WELD TOP AND BOTTOM OF SLEEVE TO SHAFT.
4. MACHINE TO FINAL DIMENSIONS WITH SURFACE FINISH OF 32 RMS.

FOR INFORMATION ONLY

US Army Corps of Engineers® Portland District

MARK	DESCRIPTION	DATE	APPR.

U. S. ARMY CORPS OF ENGINEERS
PORTLAND DISTRICT
PORTLAND, OREGON

U.S. ARMY CORPS OF ENGINEERS
HYDROELECTRIC DESIGN CENTER
PORTLAND, OREGON
CENWP-HDC

DESIGNED BY: DAN WATSON
DWN BY: G2HDCKRI
CKD BY: C. BROWN
SUBMITTED BY: BRENT L. MAHAN
PLOT SCALE: HALF SCALE
PLOT DATE: 2/15/2011
FILE NAME: M-03-1.103-JDP-005-C.dgn
SIZE: ANSI-D
DATE: February 18, 2011
SOLICITATION NO.: W9127N-07-B-#####
CONTRACT NO.: CONTRACT NUMBER
DRAWING NUMBER: JDP-1.103-3-4/5

COLUMBIA RIVER OREGON, WASHINGTON
JOHN DAY LOCK AND DAM
POWERHOUSE
SOUTH SHORE FISH PUMP REHAB

FISH PUMP LOWER
BEARING SLEEVE

SHEET IDENTIFICATION
M-005
SHEET OF

DESIGN FILE: Y:\PROJECTS\JOHN DAY-CENWP\FISH TURBINE - PUMPS\DESIGN-PHASE\DRAWINGS\FISH PUMPS\M-03-1.103-JDP-005-C.DGN

DRAWING PLOT SIZE: ANSI D | DATE AND TIME PLOTTED: 2/15/2011 2:42:47 PM | BY USERNAME: G2HDCKRI (KEVIN R. IMHOLT) | SHEET NAME: M-005

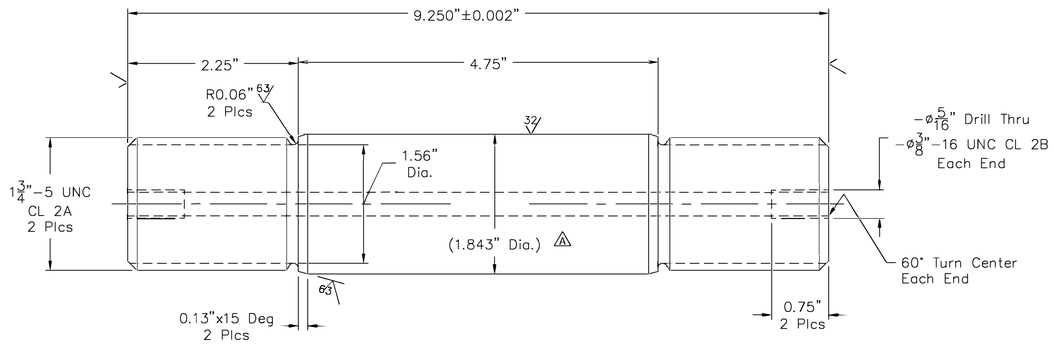

MANUFACTURING DETAIL
Item #1
Pump – Extension Shaft
Extension–Gearbox Shaft
Coupling Studs

FULL SCALE

⚠ MANUFACTURING & LINE REAMING OUTLINE

1.) One (1) blank from each lot of material is to be turned down to 1.812", then be tension tested IAW ASTM A193
2.) The studs will be machined leaving 0.010–0.015" stock on the 1.843" diameter
3.) After the coupling holes are line–reamed to size (ø1.844"), the holes shall be gauged to the nearest 0.0001". Match stamp holes/bolts.
4.) The body of the stud will then be finish machined (ground) to give a diametrical clearance of 0.0005" to 0.0020" to the reamed coupling holes, per IEEE Std. 810
5.) The finished studs to be magnetic particle (M/T) inspected per standard practice ASTM E1444. No cracks allowed.

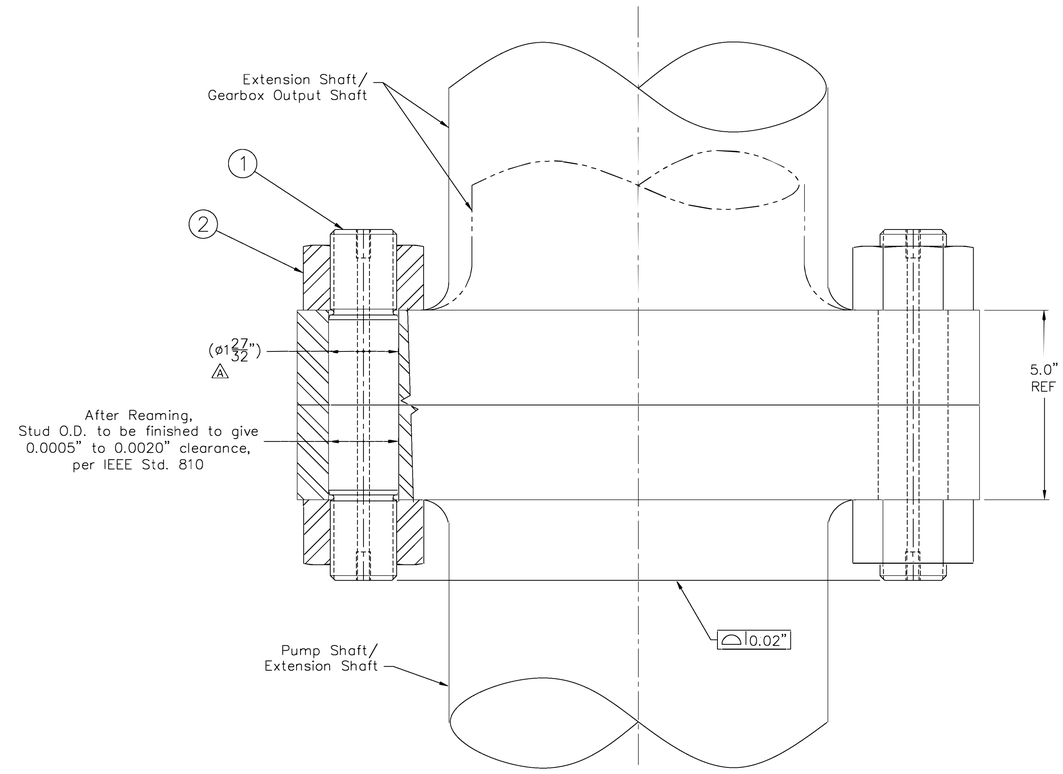

REFERENCE ASSEMBLY VIEW
PUMP SHAFT to EXTENSION SHAFT
EXTENSION SHAFT to GEARBOX SHAFT
Scale– 1:2

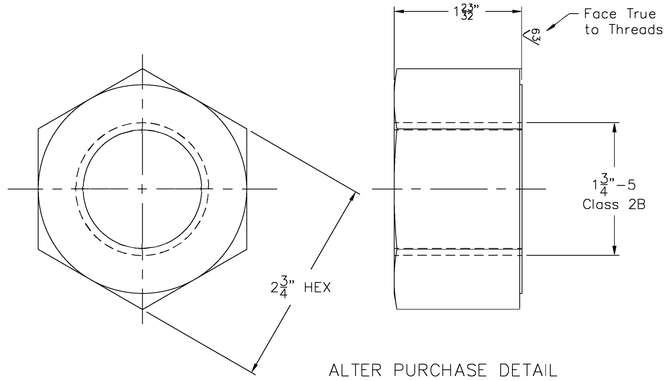

ALTER PURCHASE DETAIL
Item #2
Coupling Stud Hex Nuts

FULL SCALE

AS–CONSTRUCTED

QUANTITY	ITEM NO.	PART NAME, TYPE	LB. EACH	REFERENCE	MATERIAL
40	2	1-3/4"-5 Hvy Hex Nuts	–		Alloy Steel ASTM A194, Gr. 7
20	1	GEN-EXT and EXT-TUR Coupling Studs	6.4	TensionTest	Alloy Steel, ø2" ASTM A193, Gr. B7

REVISIONS — CURRENT REV. B

REV.	DATE	BY	CHANGES
A	08/27/11	JRW	ø1.844" (1-27/32") REAM DIA WAS 1.813" (1-13/16)
B	09/12/12	JRW	–AS–CONSTRUCTED– NO CHANGES FROM REV A

Quality Service Since 1862

DATE	DRAWN BY	CHECKED BY
06/13/11	JR Ward	

SCALE	UNIT NUMBER	APPROVED BY
AS NOTED	W-3036	

The James Leffel & Co.
Manufacturers of
HYDRAULIC TURBINES

CONTRACT NO: W9127N-10-C-0029
CLIN: 0105/0106
NEXT ASSEMBLY: –
DRAWING TITLE: COUPLING STUDS/NUTS PUMP–EXTENSION SHAFT EXTENSION–GEARBOX SHAFT
DRAWING NUMBER: 54199
SHEET SIZE: ANSI–D
SHEET NO OF: 1 1
PURCHASER, SITE: USACE–PORTLAND JOHN DAY DAM, RUFUS, OR
ORDER NUMBER: R-120627

FOR INFORMATION ONLY

TOLERANCES; UNLESS OTHERWISE SPECIFIED
X.XXX= +/–.010"
X.XX= +/–.020"
X.X= +/–.030"
Frac.= +/–1/64"
Angle= +/– 1 Deg.
Break All Edges .005"/.010"
✓ = 125 RMS

3.) PUMP–EXT and EXT–GEARBOX Coupling Bolts are the same
2.) Material certifications given results of chemical and physical test result shall be supplied for both the studs and nuts
1.) Quantities listed are for one unit
NOTES:

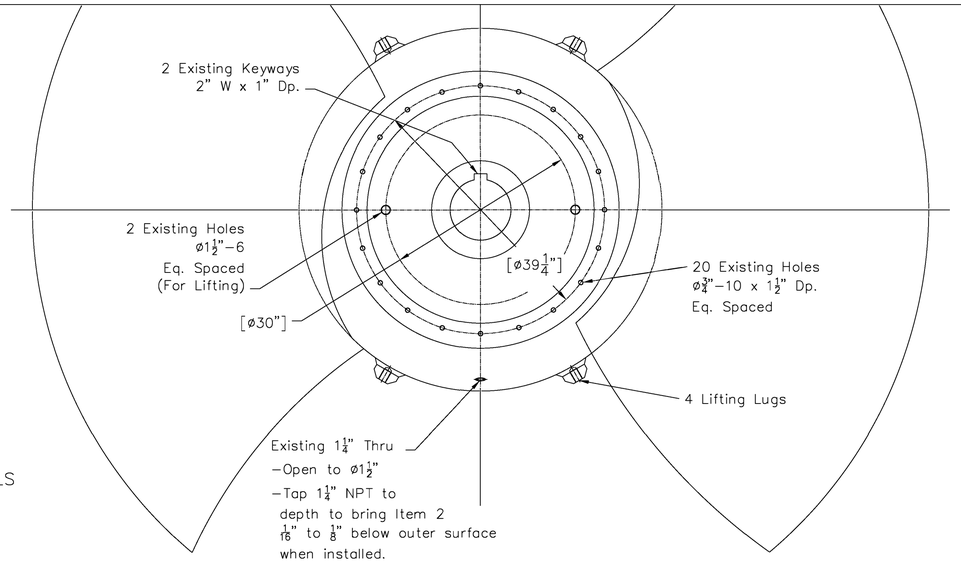

REFERENCE ORIGINAL WORTHINGTON
DRAWING RX–13799 FOR MORE DETAILS

Dimensions in brackets [X.XXX]
reference existing dimensions

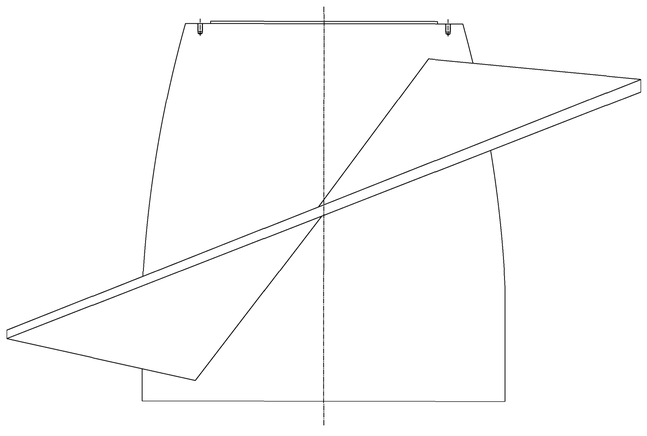

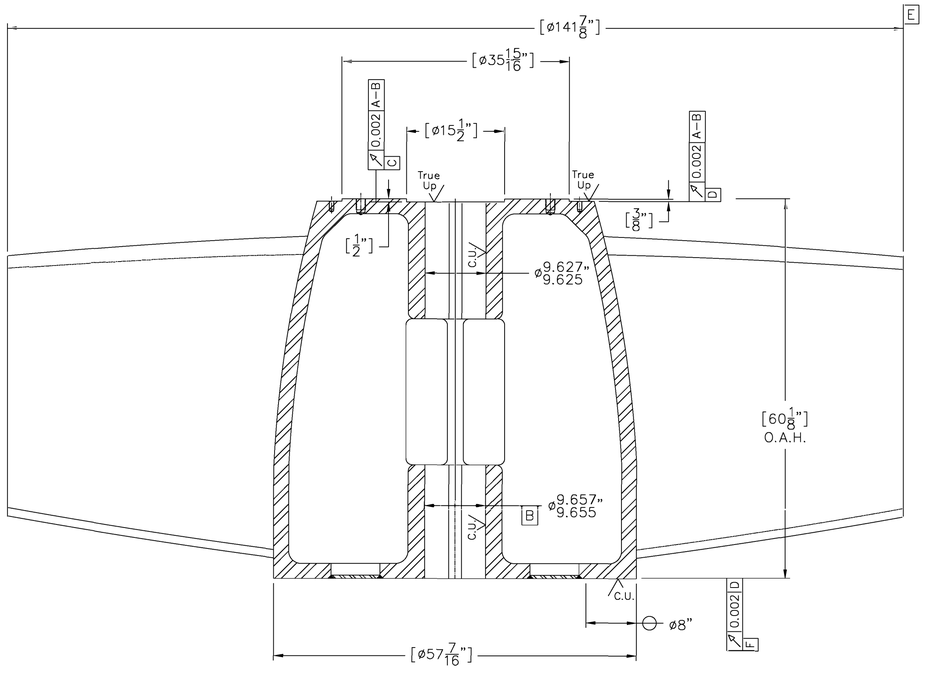

AS–CONSTRUCTED

OUTLINE OF WORK (General Note 4):

1.) Initial align to existing diameters "A" & "B" and surface "C"
2.) Determine actual size of diameter "E" and perform a T.I.R. run–out check
3.) Skim bore diameters "A" & "B" to 80%–100% clean up
4.) Take a true up cut of surface "C"
5.) Take a true up cut of surface "D"
6.) Measure and record:
  –Actual "A" & "B" diameters at three locations and +/–45° to Key
  –T.I.R run–outs of surfaces "C" & "D"

7.) Take true up cut of surface "F" to extent given.

7.) Test fit pump shaft and keys
⚠6.) Coat exterior per drawing 54220 using Enecon CL + AC
5.) Static balance
⚠4a.) Repair blade tip diameters per Drawing 54230
4.) Align, inspect, and machine per this drawing
3.) Blast, prime, and paint hub cavity with MIL–DTL–24441D, Type III Epoxy Polyamide
2.) Perform Visual and P/T or M/T of:
  –Outer diameter profile surface and blades, existing surface "C', and existing bores "A" & B'"
1.) Remove shaft from propeller
NOTES:

TOLERANCES; UNLESS
OTHERWISE SPECIFIED
X.XXX= +/–.010"
X.XX= +/–.020"
X.X= +/–.030"
Frac.= +/–1/64"
Angle= +/– 1 Deg.
Break All Edges .005"/.010"
✓ = 125 RMS

FOR INFORMATION ONLY

QUANTITY	ITEM NO.	PART NAME, TYPE		REFERENCE	MATERIAL
1	2	1–1/4" NPT Hex Socket Pipe Plug			304 S/S McMaster: 4464K367
1	1	Pump Propeller	22,000 LB. EACH		Cast Carbon Steel QQ–S–681D, CL 65–35

REVISIONS: B CURRENT REV.

REV.	DATE	BY	CHANGES
A	10/14/11	JRW	–ADDED GENERAL NOTE 4a –CORRECTED DRAWING NOTE 6 TO READ DWG 54220
B	09/12/12	JRW	–AS–CONSTRUCTED– NO CHANGES FROM REV A

Quality Service Since 1862

The James Leffel & Co.
Manufacturers of
HYDRAULIC TURBINES

DATE	DRAWN BY	CHECKED BY
08/16/11	JR Ward	
SCALE: 1"=1 ft.	UNIT NUMBER: W–3036	APPROVED BY:

CONTRACT NO: W9127N–10–C–0029

DRAWING TITLE: PUMP PROPELLER REFURBISHMENT

PURCHASER, SITE: USACE–PORTLAND JOHN DAY DAM, RUFUS, OR

ORDER NUMBER: R–120627

CLIN: 0105

NEXT ASSEMBLY: WORTHINGTON SL 11589

DRAWING NUMBER: 54221

SHEET SIZE: ANSI–D

SHEET NO OF: 1 1

Dimensions in brackets [X.XXX]
reference existing dimensions

REFERENCE ORIGINAL WORTHINGTON
DRAWING RX-13799 AND LEFFEL DWG 54221
FOR MORE DETAILS

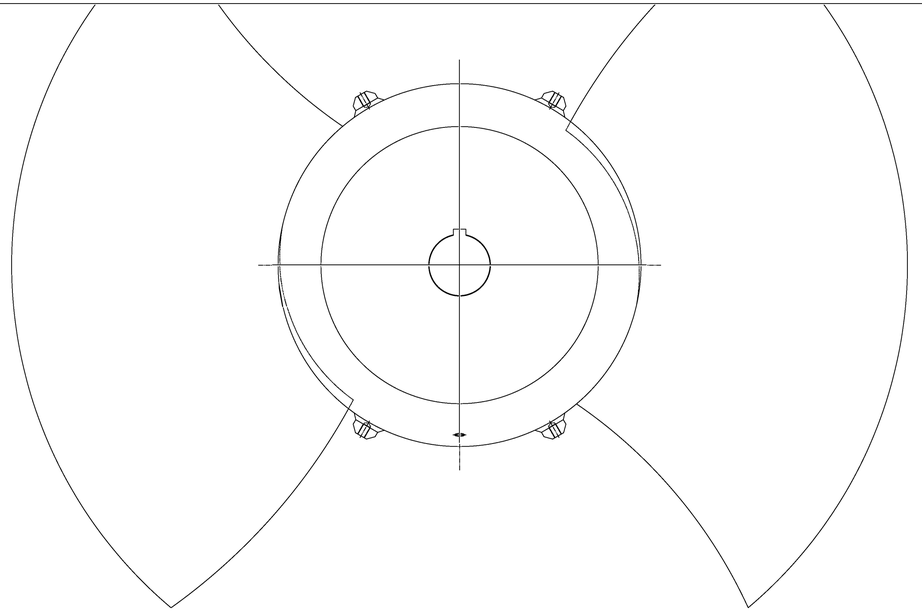

OUTLINE OF REPAIR WORK::
1.) This work preformed after true up machining per drawing 54221.
-Bore dimensions given here are the trued up sizes
2.) MIG weld up blade tips to assure clean-up for machining
3.) P/T Inspect weld build up
4.) Turn blade tip diameters per drawing
5.) Static Balance, Blast/Coat Exterior, and Test Fit Pump Shaft & Keys per 54221 drawing Notes 5, 6, & 7.

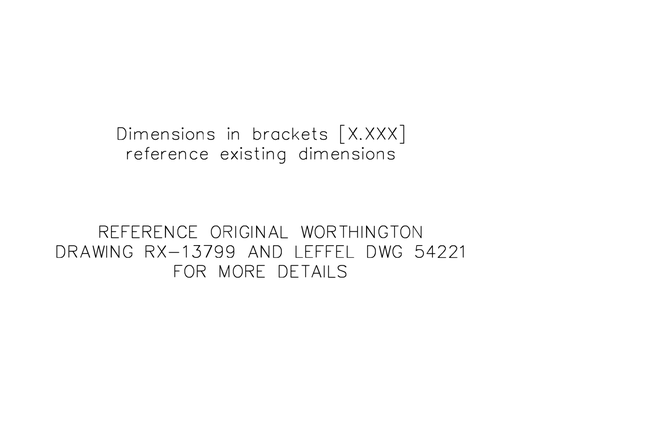

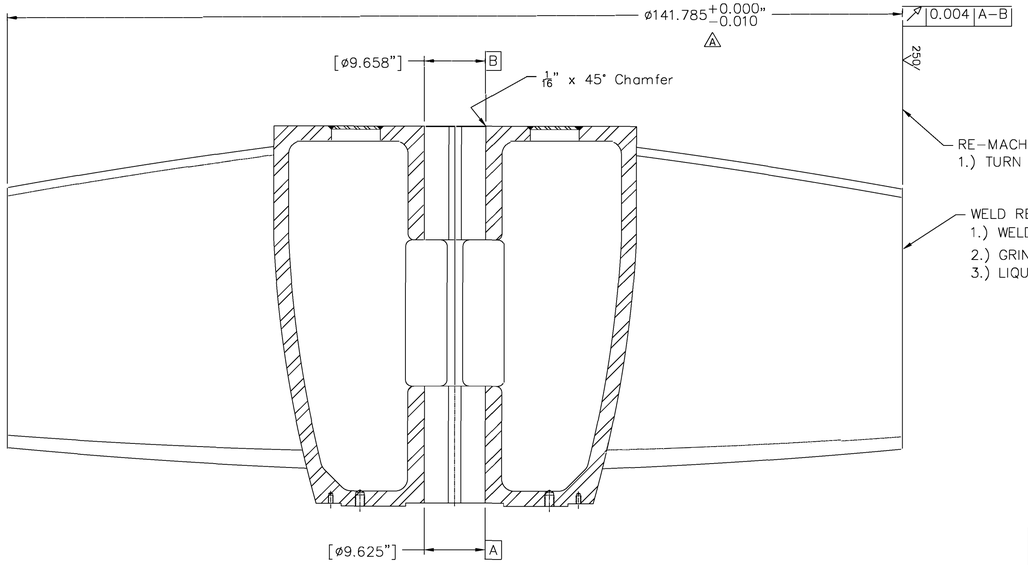

AS-CONSTRUCTED

TOLERANCES; UNLESS
OTHERWISE SPECIFIED
X.XXX= +/-.010"
X.XX= +/-.020"
X.X= +/-.030"
Frac.= +/-1/64"
Angle= +/- 1 Deg.
Break All Edges .005"/.010"
✓= 125 RMS

⚠ 1.) The Enecon coating to be applied after machining has a DFT of 0.024"/0.030"
The post coating blade tip diameter will be in the range of: 141.833" to 141.845"
NOTES:

FOR INFORMATION ONLY

QUANTITY	ITEM NO.	PART NAME, TYPE	L.B. EACH	REFERENCE	MATERIAL
1	1	Pump Propeller	22,000		Cast Carbon Steel QQ-S-681D, CL 65-35

CURRENT REV: B

REVISIONS

REV.	DATE	BY	CHANGES
A	10/14/11	JRW	-REVISED FINAL DIAMETER PER RFI-0030 & RFI-0033 -REVISED WG NOTE 1 TO READ 141.833" to 141.845" -ADDED 1/16" x 45° CHAMFER TO BORE "B"
B	09/12/12	JRW	-AS-CONSTRUCTED- NO CHANGES FROM REV A

Quality Service Since 1862

The James Leffel & Co.
Manufacturers of
HYDRAULIC TURBINES

DATE	DRAWN BY	CHECKED BY
10-02-11	JR Ward	

SCALE	UNIT NUMBER	APPROVED BY
1"=1 ft.	W-3036	

CONTRACT NO: W9127N-10-C-0029

DRAWING TITLE

PUMP PROPELLER
BLADE TIP
DIAMETER REPAIR

USACE-PORTLAND
JOHN DAY DAM, RUFUS, OR
PURCHASER SITE

R-120627
ENGLER NUMBER

CLIN: 0146
NEXT ASSEMBLY: -

DRAWING NUMBER: 54230

SHEET SIZE: ANSI-D
SHEET NO OF: 1 1

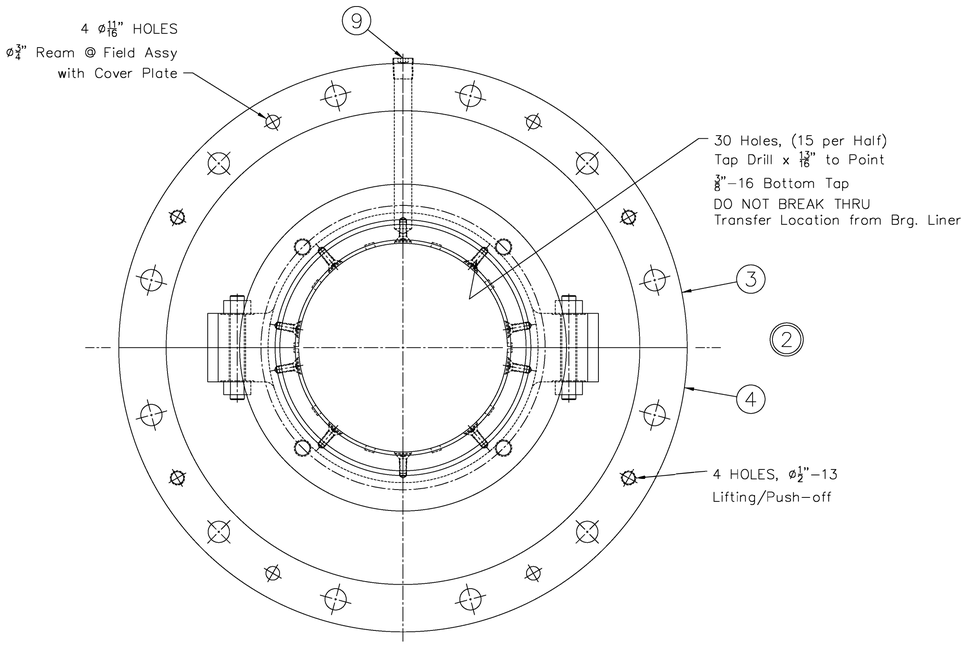

ITEM 1
LINER INSTALL &
FINAL MACHINE

Scale 3"=1 ft.

SEE SHEET 2 FOR
PRE-LINER INSTALL MACHINING

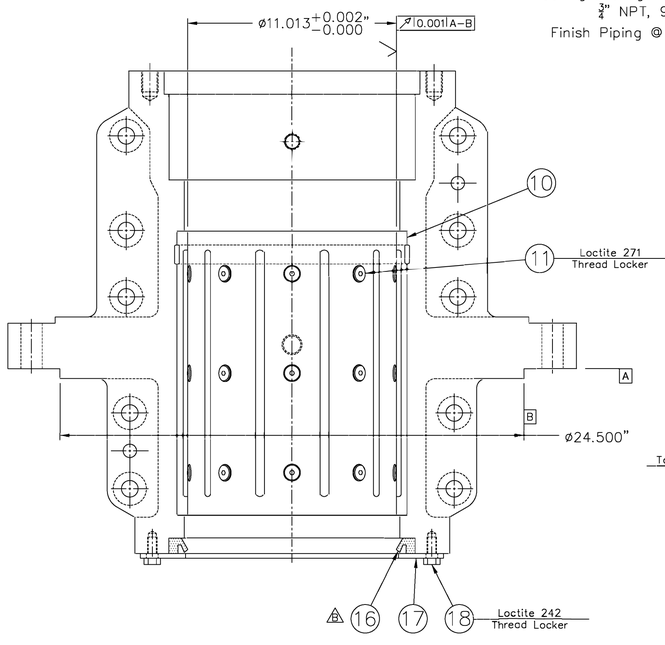

VIEW AT
SPLITLINE

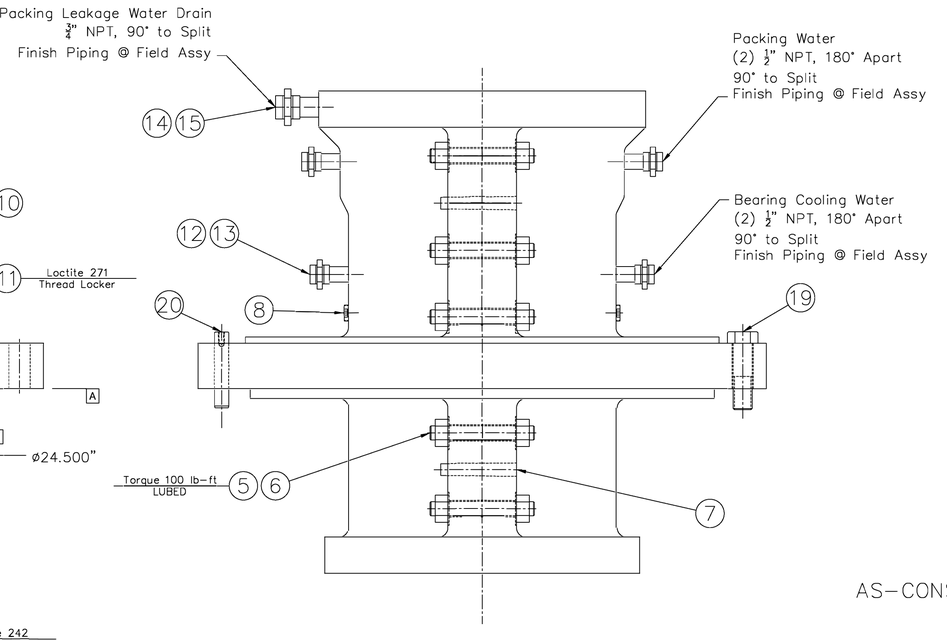

AS-CONSTRUCTED

OUTLINE OF MACHINE WORK:
1.) PER SHEET 2
  a.) Machine as given
2.) PER SHEET 1
  a.) Install Bearing Liner Halves
  b.) Finish bore

TOLERANCES; UNLESS
OTHERWISE SPECIFIED
X.XXX= +/-.010"
X.XX= +/-.020"
X.X= +/-.030"
Frac.= +/-1/64"
Angle= +/- 1 Deg.
Break All Edges .005"/.010"
√ = 125 RMS

QUANTITY	ITEM NO.	PART NAME, TYPE	LB. EACH	REFERENCE	MATERIAL
4	20	ø3/4" x 4" Vented Pull Dowel	-		Alloy Steel
12	19	ø1"-8 x 3-1/2" HHCS	-		18-8 SS, Plain
8	18	ø1/2"-13 x 1" HHCS	-		18-8 SS, Plain
1	17	Retainer Plate, Split- REUSE EXISTING	-		Carbon Steel Epoxy Polymide Paint
1	16	Split Seal, 13.000" x 11.000" x 0.813	-		NBR Garlock: 25003-4063
1	15	Pipe Nipple, 3/4" NPT x 2"	-	-	304 SS, SCH 40
1	14	Pipe Union, 3/4" NPT x 3/4" NPT	-	-	304 SS
4	13	Pipe Nipple, 1/2" NPT x 2"	-	-	304 SS, SCH 40
4	12	Pipe Union, 1/2" NPT x 1/2" NPT	-	-	304 SS
30	11	ø3/8"-16 x 1" Slotted Flat Head Screw	-		Silicon Bronze Ziegler# 37C100MSFJ
2	10	Bearing Liner, Halves	-		Non-Lube, Composite Trelleborg GBND003176
2	9	3/4" NPT Socket Pipe Plug	-		302 SS
2	8	1/2" NPT Socket Pipe Plug	-		302 SS
2	7	#10 Taper Pins	-		Carbon Steel, Plain
20	6	ø3/4" Hvy Hex Nut	-		18-8 SS, A194 Gr. B8
10	5	ø3/4"-10 x 6" Thrd Stud	-		18-8 SS, A193 Gr. B8
1	4	Upper Bearing Half "B"	1000		-
1	3	Upper Bearing Half "A"	1000		-
1	2	Upper Bearing Housing	(2000)		-
1	1	Upper Bearing Assembly	(2000)		-

FOR INFORMATION ONLY

REVISIONS	REV.	DATE	BY	CHANGES
CURRENT REV. B	A	12/04/11	JRW	-CORRECTED INSTALLED DIRECTION OF SEAL SEAL RING
	B	09/12/12	JRW	-AS-CONSTRUCTED- NO CHANGES FROM REV A

Quality Service Since 1862

The James Leffel & Co.
Manufacturers of
HYDRAULIC TURBINES

DATE 09/21/11	DRAWN BY JR Ward	CHECKED BY
SCALE AS NOTED	UNIT NUMBER W-3036	APPROVED BY

CONTRACT NO. W9127N-10-C-0029
CLIN 0102 & 0141
NEXT ASSEMBLY -

DRAWING TITLE
UPPER BEARING
VERTICAL PROPELLER PUMP
REFURBISHMENT

DRAWING NUMBER 54225
SHEET SIZE ANSI-D
SHEET NO. 1 OF 2

PURCHASER, SITE: USACE-PORTLAND JOHN DAY DAM, RUFUS, OR
ORDER NUMBER: R-120627

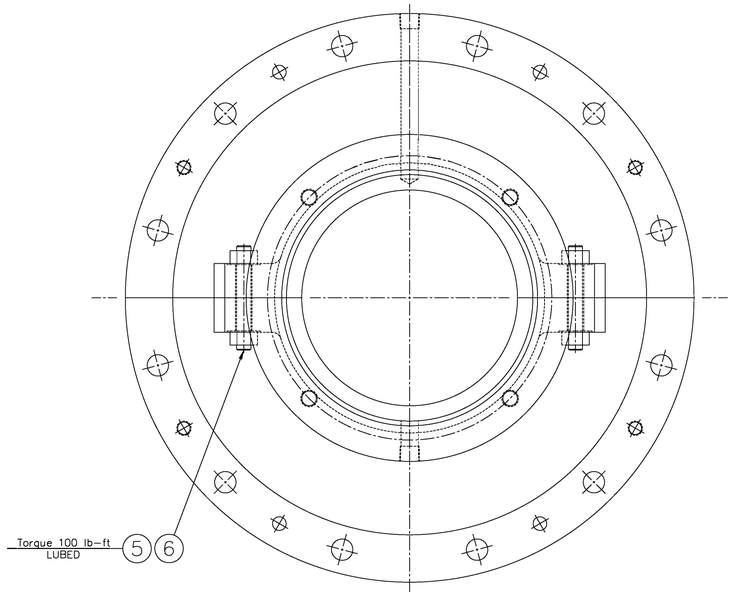

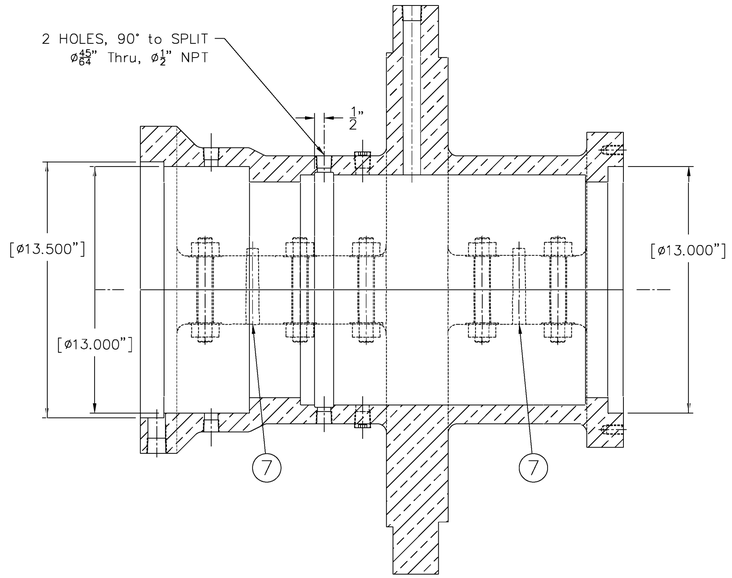

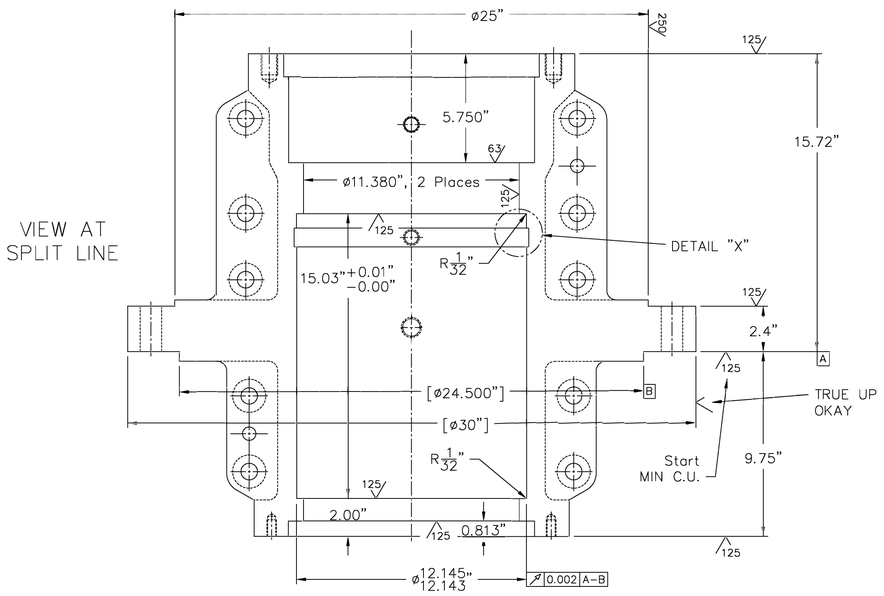

ITEM 2
MACHINING PRIOR TO INSTALL
OF BEARING LINER PER SHEET 1

Scale 3"=1 ft.

INITIAL ALIGNMENT and WORK
TO BE TRUE TO ORIGINAL
SURFACE "A" and "DIAMETER "B"

DIMENSIONS IN BRACKETS [X.XXX]
REFERENCE EXISTING DIMENSIONS

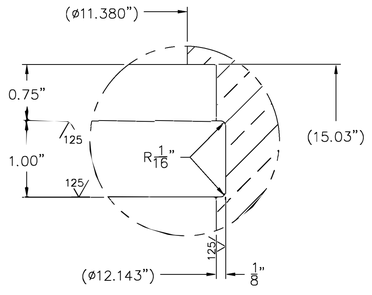

DETAIL "X"
Scale- FULL

AS-CONSTRUCTED

FOR INFORMATION ONLY

TOLERANCES; UNLESS
OTHERWISE SPECIFIED
X.XXX= +/-.010"
X.XX= +/-.020"
X.X= +/-.030"
Frac.= +/-1/64"
Angle= +/- 1 Deg.
Break All Edges .005"/.010"
✓= 125 RMS

QUANTITY	ITEM NO.	PART NAME, TYPE	L.B. EACH	REFERENCE	MATERIAL

REVISIONS
CURRENT REV: B

REV.	DATE	BY	CHANGES
A	12/04/11	JRW	-SEE SHEET 1
B	09/12/12	JRW	-SEE SHEET 1

Quality Service Since 1862

DATE	DRAWN BY	CHECKED BY
09/21/11	JR Ward	

SCALE	UNIT NUMBER	APPROVED BY
AS NOTED	W-3036	

The James Leffel & Co.
Manufacturers of
HYDRAULIC TURBINES

USACE-PORTLAND
JOHN DAY DAM, RUFUS, OR
PURCHASER, SITE

CONTRACT NO: W9127N-10-C-0029

CLIN: 0102 & 0141

NEXT ASSEMBLY: SHEET 1

DRAWING TITLE
UPPER BEARING
VERTICAL PROPELLER PUMP
REFURBISHMENT

DRAWING NUMBER: 54225

ORDER NUMBER: R-120627

SHEET SIZE: ANSI-D

SHEET NO OF: 2 2

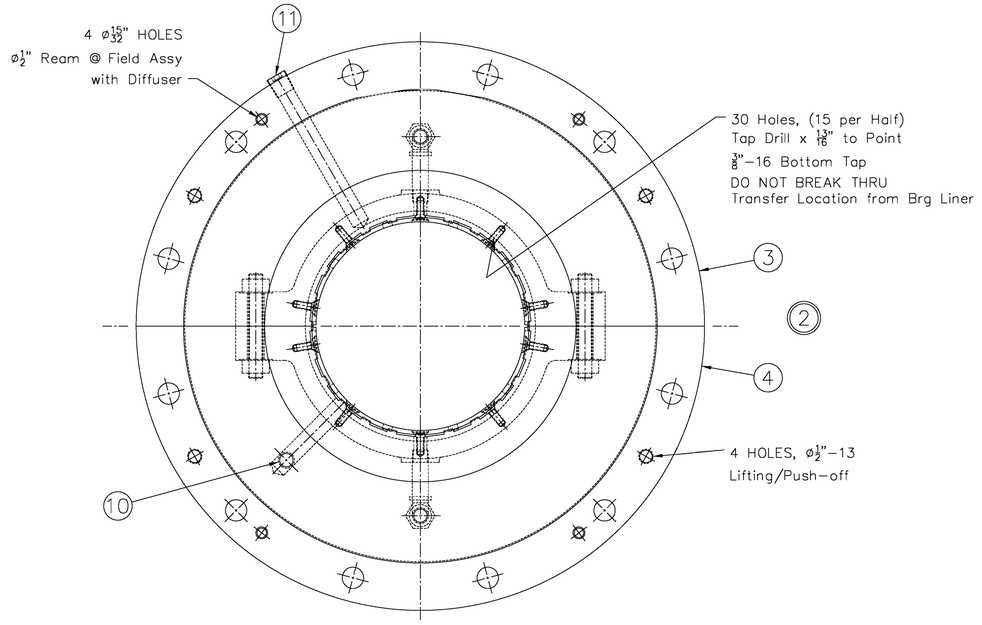

ITEM 1
LINER INSTALL &
FINAL MACHINE

Scale 3"=1 ft.

SEE SHEET 2 FOR
PRE–LINER INSTALL MACHINING

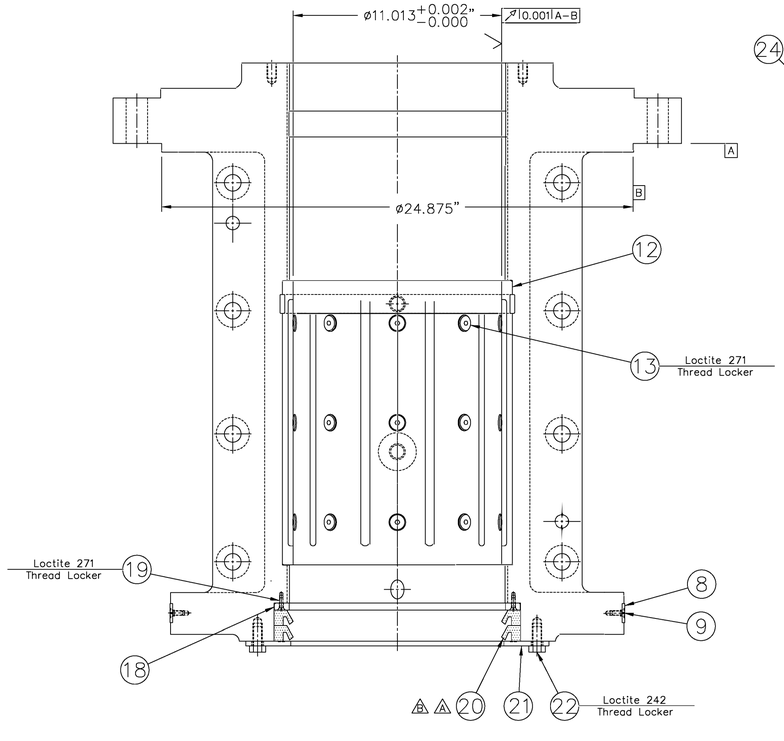

VIEW AT
SPLITLINE

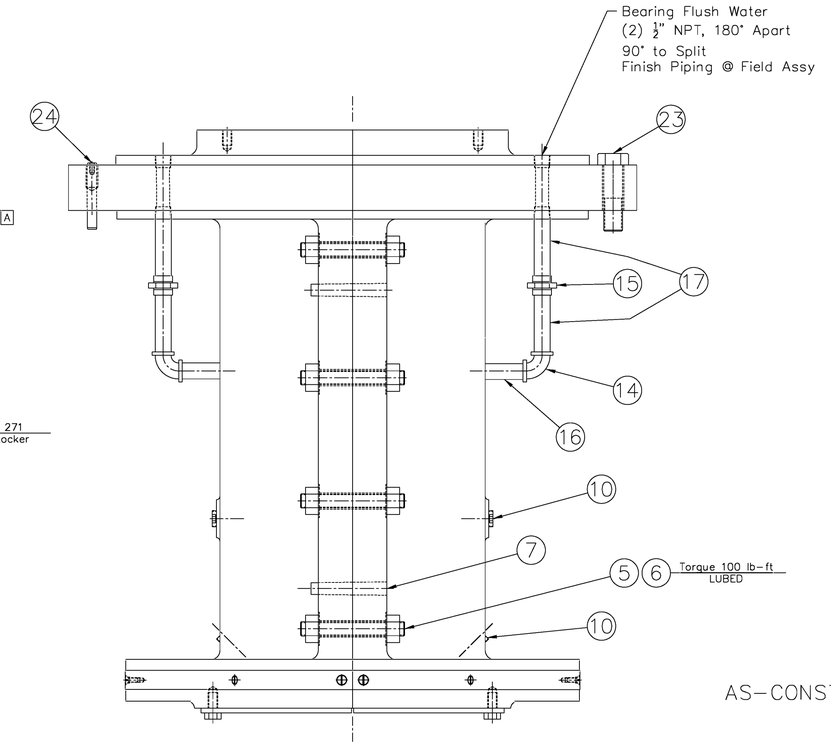

AS–CONSTRUCTED

OUTLINE OF MACHINE WORK:
1.) PER SHEET 2
   a.) Attach Band Halves
   b.) Weld repair gouge
   c.) Machine as given
2.) PER SHEET 1
   a.) Install Bearing Liner Halves
   b.) Finish bore
   c.) Manufacture Spacer

TOLERANCES; UNLESS
OTHERWISE SPECIFIED
X.XXX= +/–.010"
X.XX= +/–.020"
X.X= +/–.030"
Frac.= +/–1/64"
Angle= +/– 1 Deg.
Break All Edges .005"/.010"
√ = 125 RMS

FOR INFORMATION ONLY

4	24	ø1/2" x 3-1/2" Vented Pull Dowel	–		Alloy Steel
12	23	ø1"-8 x 3-1/2" Hex Bolt	–		18-8 SS, Plain
8	22	ø1/2"-13 x 1" HHCS	–		18-8 SS, Plain
1	21	Retainer Plate, Split- REUSE EXISTING	–		Carbon Steel Epoxy Polymide Paint
A	2	20	Split Seal, 13.000" x 11.000" x 0.813	–		NBR Garlock: 25003-4063
A	8	19	#10-32 x 5/8" Slotted Flat Head Scrw	–		Silicon Bronze Ziegler# 10F150MSFJ/FINE
1	18	Spacer, Split	–	–	Phenolic Gr CE
4	17	Pipe Nipple, 1/2" NPT x 4"	–	–	304 SS, SCH 40
2	16	Pipe Nipple, 1/2" NPT x 3"	–	–	304 SS, SCH 40
2	15	Pipe Union, 1/2" NPT x 1/2" NPT	–	–	304 SS
2	14	Female 90° Elbow, 1/2 NPT	–	–	304 SS
30	13	ø3/8"-16 x 1" Slotted Flat Head Screw	–		Silicon Bronze Ziegler# 37C100MSFJ
2	12	Bearing Liner, Halves	–		Non–Lube, Composite Trelleborg GBND003176
1	11	3/4" NPT Socket Pipe Plug	–		304 SS
5	10	1/2" NPT Socket Pipe Plug	–		302 SS
10	9	1/4"-20 x 5/8" Slotted Flat Head Scrw	–		Silicon Bronze Ziegler# 25C62MSFJ
2	8	Band Halves, 3/16" x 1" Wide x 37-3/4"	–		Brass, Alloy 360
2	7	#10 Taper Pins	–		Carbon Steel, Plain
20	6	ø3/4" Hvy Hex Nut	–		18-8 SS, A194 Gr. B8
10	5	ø3/4"-10 x 6" Thrd Stud	–		18-8 SS, A193 Gr. B8
1	4	Lower Bearing Half "B"	1000		– –
1	3	Lower Bearing Half "A"	1000		– –
1	2	Lower Bearing Housing	(2000)		– –
1	1	Lower Bearing Assembly	(2000)		– –
QUANTITY	ITEM NO.	PART NAME, TYPE	L.B. EACH	REFERENCE	MATERIAL

REVISIONS

REV.	DATE	BY	CHANGES
A	10/26/11	JRW	–ADDED SECOND ITEM 22 SEAL RING
B	12/04/11	JRW	–CORRECTED INSTALLED DIRECTION OF SEAL SEAL RINGS
C	09/12/12	JRW	–AS–CONSTRUCTED– NO CHANGES FROM REV B

CURRENT REV. C

Quality Service Since 1862

The James Leffel & Co.
Manufacturers of
HYDRAULIC TURBINES

USACE–PORTLAND
JOHN DAY DAM, RUFUS, OR
PURCHASER, SITE

R–120627
ORDER NUMBER

DATE: 09/21/11 | DRAWN BY: JR Ward | CHECKED BY:
SCALE: AS NOTED | UNIT NUMBER: W–3036 | APPROVED BY:
CONTRACT NO: W9127N–10–C–0029
CLIN: 0101 & 0140 | NEXT ASSEMBLY: –

DRAWING TITLE
LOWER BEARING
VERTICAL PROPELLER PUMP
REFURBISHMENT

DRAWING NUMBER
54226

SHEET SIZE: ANSI–D | SHEET NO. 1 OF 2

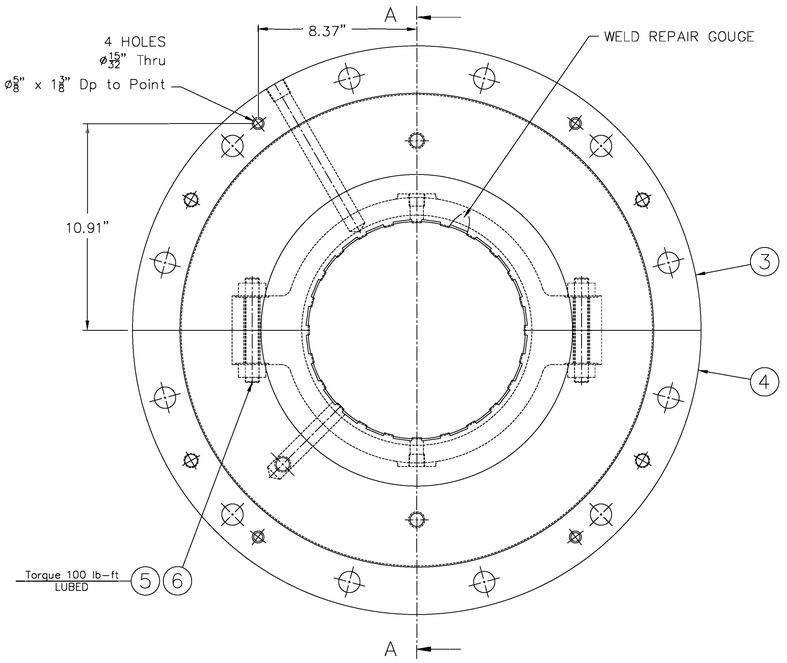

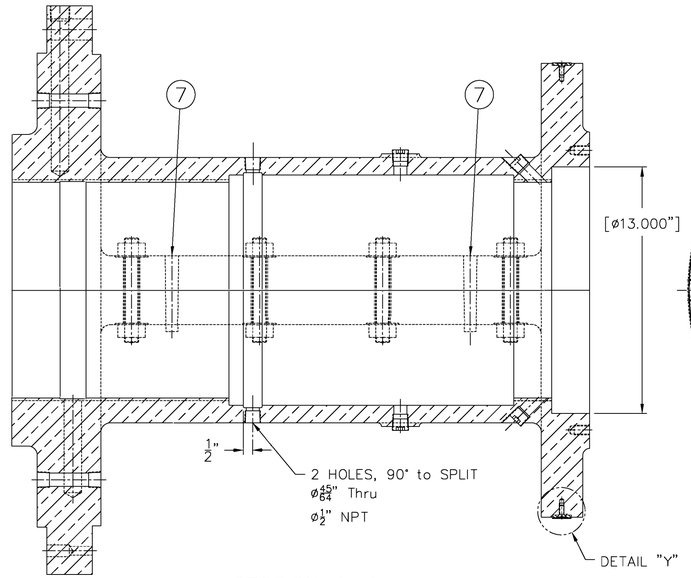

SECTION A–A

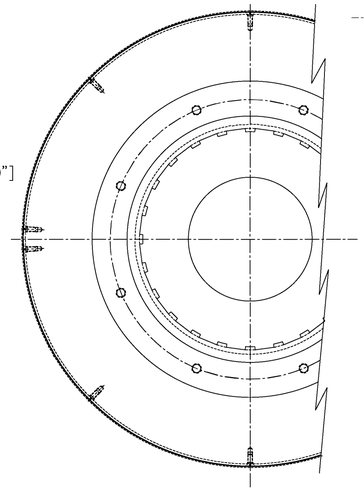

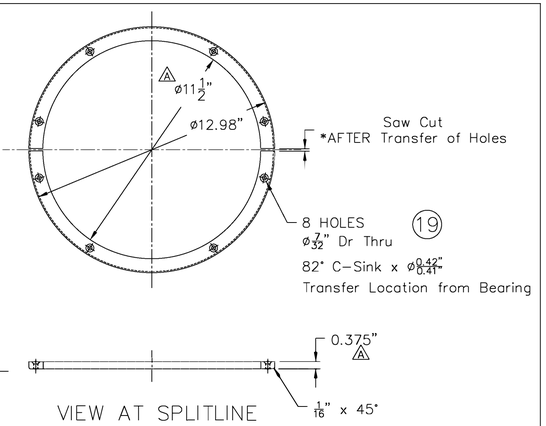

VIEW AT SPLITLINE

ITEM 18
SPACER
Scale 3"=1 ft.

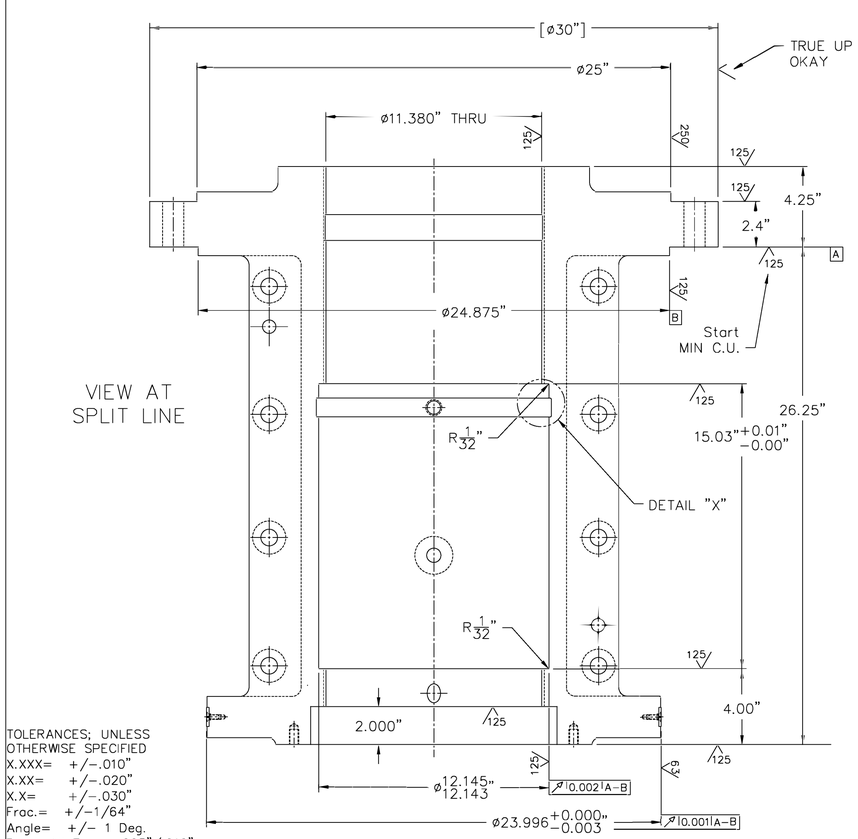

VIEW AT
SPLIT LINE

ITEM 2
MACHINING PRIOR TO INSTALL
OF BEARING LINER PER SHEET 1

Scale 3"=1 ft.

INITIAL ALIGNMENT and WORK
TO BE TRUE TO ORIGINAL
SURFACE "A" and "DIAMETER "B"

DIMENSIONS IN BRACKETS [X.XXX]
REFERENCE EXISTING DIMENSIONS

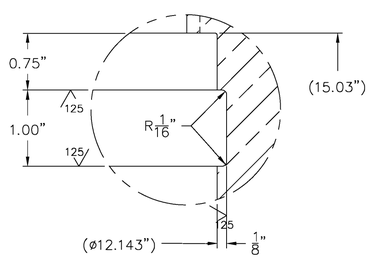

DETAIL "X"
Scale– FULL

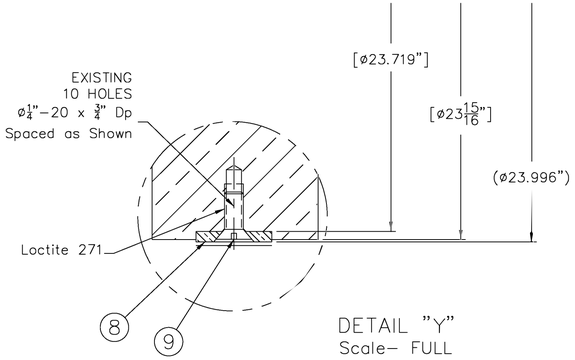

DETAIL "Y"
Scale– FULL

AS–CONSTRUCTED

FOR INFORMATION ONLY

QUANTITY	ITEM NO.	PART NAME, TYPE	L.B. EACH	REFERENCE	MATERIAL

REVISIONS	REV.	DATE	BY	CHANGES
CURRENT REV	A	10/26/11	JRW	-SEE SHEET 1
	B	12/04/11	JRW	-SEE SHEET 1
C	C	09/12/12	JRW	-SEE SHEET 1

Quality Service Since 1862

DATE	DRAWN BY	CHECKED BY
09/21/11	JR Ward	
SCALE: AS NOTED	UNIT NUMBER: W-3036	APPROVED BY:

The James Leffel & Co.
Manufacturers of
HYDRAULIC TURBINES

PURCHASER, SITE	CONTRACT NO.	CLIN	NEXT ASSEMBLY
USACE-PORTLAND JOHN DAY DAM, RUFUS, OR	W9127N-10-C-0029	0101 & 0140	54123

DRAWING TITLE
LOWER BEARING
VERTICAL PROPELLER PUMP
REFURBISHMENT

ORDER NUMBER: R-120627

DRAWING NUMBER: 54226

SHEET SIZE: ANSI-D | SHEET NO. 2 OF 2

PARTS LIST		
ITEM	QTY	DESCRIPTION
1	2	SELF LUBRICATING BEARING LINER HALF
2	2	SELF LUBRICATING BEARING LINER HALF
3	36	3/8 x 1-1/4 YELLOW BRONZE MACHINE SCREW

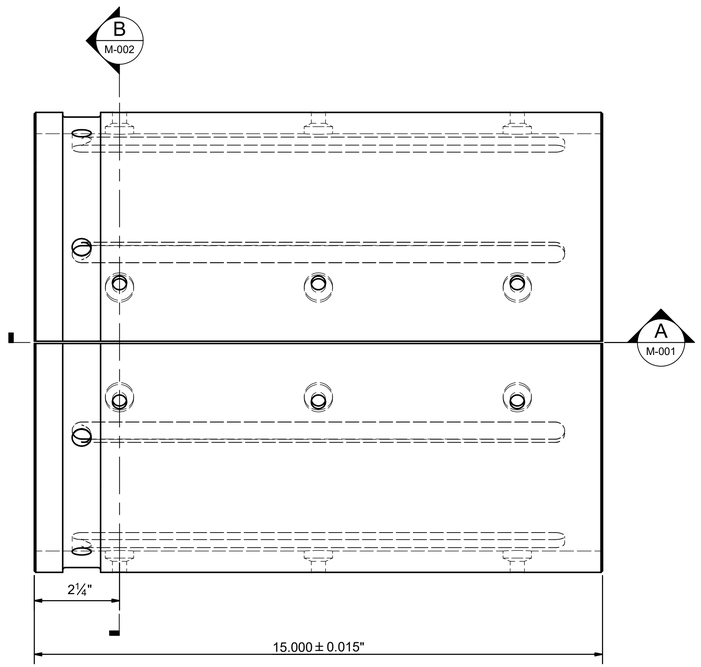

LOWER PUMP BEARING LINER
SCALE: 6" = 1'-0"

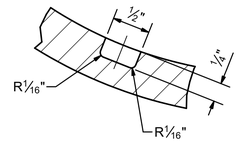

C M-002 DETAIL
SCALE: 12" = 1'-0"

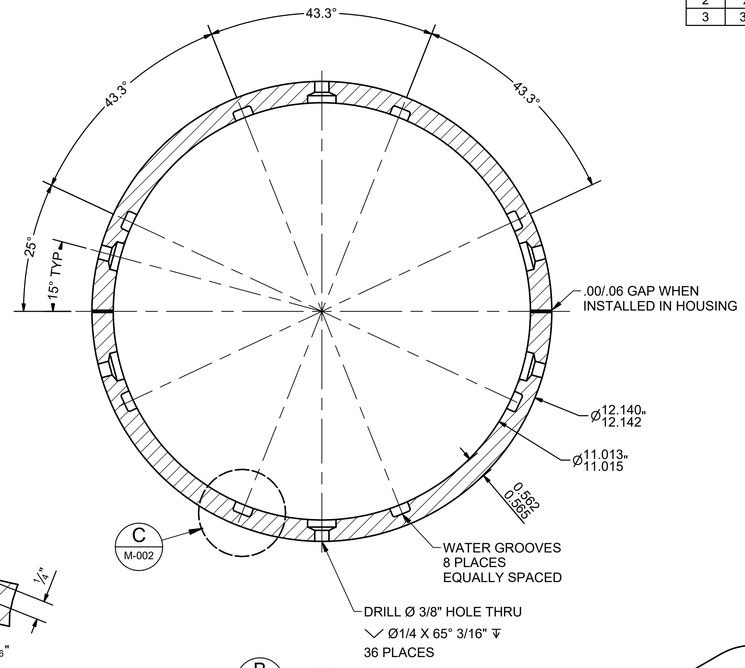

B M-002 SECTION
SCALE: 6" = 1'-0"

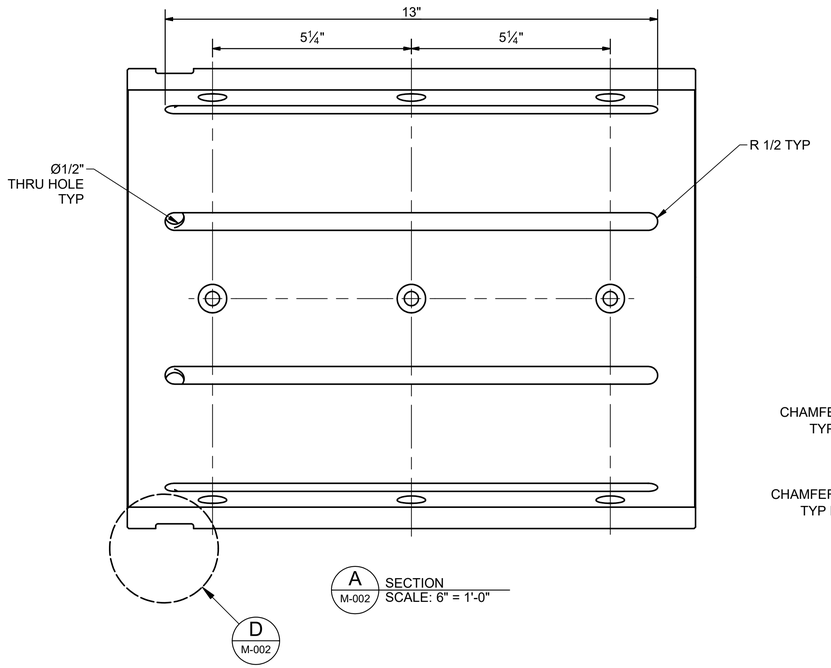

A M-002 SECTION
SCALE: 6" = 1'-0"

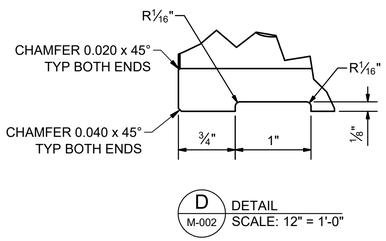

D M-002 DETAIL
SCALE: 12" = 1'-0"

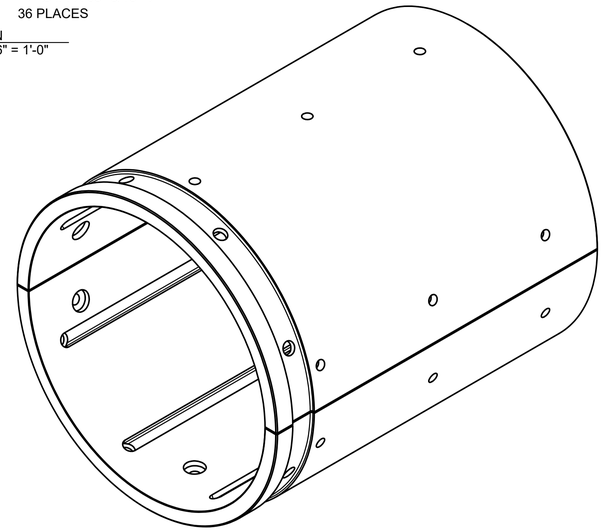

ISOMETRIC VIEW
SCALE: NTS

FABRICATION NOTES:
1. KEEP THE BEARINGS IN MATCHED SETS.
2. ALL SURFACES TO BE A MAXIMUM SURFACE FINISH OF 250 uIN.

FIELD ASSEMBLY NOTES:
1. USE THE BEARING HALVES AS A TEMPLATE TO DRILL AND TAP FOR 3/8 IN BRONZE MACHINE SCREWS IN HOUSING.
2. THE RUNNING MINIMUM CLEARANCE BETWEEN BEARING AND JOURNAL TO BE 0.012 IN ON THE DIAMETER.

FOR INFORMATION ONLY

US Army Corps of Engineers®

MARK	DESCRIPTION	DATE

DESIGNED BY: D. PENN
DRAWN BY: G2ENCGEP
CHECKED BY:
ISSUE DATE: MMMMM YYYY
SOLICITATION NO.: XXXXXX-XX-X-XXXX
CONTRACT NO.: WXXXXX-XX-X-XXX
SUBMITTED BY:
SIZE: ANSI D
FILE NO.:

U.S. ARMY CORPS OF ENGINEERS
PORTLAND DISTRICT
333 SW 1ST AVE
PORTLAND, OR 97204-3440

JOHN DAY LOCK AND DAM
POWERHOUSE
FISH PUMP REPAIR

LOWER PUMP BEARING LINER

SHEET ID
M-003

STATUS