MODULAR OPEN RF ARCHITECTURE

(MORA)

DRAFT SPECIFICATION DOCUMENT

VERSION 2.4

MARCH 01, 2021

DISTRIBUTION STATEMENT A. Approved for public release. Distribution is unlimited.

TABLE OF CONTENTS

1 INTRODUCTION 7
1.1 Objectives 7
1.2 Motivations for a Modular Open RF Architecture 7
1.3 Approach 7
1.4 Scope 8
1.5 Maturity Levels 9
1.6 Document Conventions 9
1.6.1 Specification Tags 9
1.6.2 Standards Key Words 10
1.6.3 MORA Definitions 11
1.7 Compliance Statement 11
2 REFERENCED DOCUMENTS 12
3 ABBREVIATIONS, ACRONYMS, AND DEFINITIONS 13
3.1 ABBREVIATIONS AND ACRONYMS 13
3.2 MORA Definitions Table 17
4 ARCHITECTURE 21
4.1 VICTORY Overview 21
4.2 MORA Overview 23
4.3 MORA Top-Down Perspective 25
4.3.1 MORA Signal Resource 27
4.3.2 MORA Processing Resource 27
4.3.3 MORA Transitional Implementation 27
4.4 MORA Functional Perspective 28
4.4.1 Antenna (ANT) Signal Resource 30
4.4.2 RF Conditioning (RFC) Signal Resource 30
4.4.3 RF Distribution (RFD) Signal Resource 30
4.4.4 RF Translation (RFT) Signal Resource 30
4.4.5 Signal Domain Conversion (SDC) Signal Resource 30
4.5 MORA Devices 30
4.5.1 MORA Radiohead (RHD) Device 31
4.5.2 MORA RF Conditioning and Distribution (RCD) Device 31
4.5.3 MORA Software Defined Radio (SDR) Device 31
4.6 MORA Resource Management 31
4.6.1 Resource Management Objectives 31
4.6.2 Resource Management Methodology 32
4.6.3 Signal Resource Partitioning 32
4.6.4 Processing Resource Partitioning 34
4.6.5 Resource Capabilities and Tasking 36
4.7 MORA Basic System Composition 38
5 SPECIFICATIONS 40
5.1 VICTORY Specifications 40
5.1.1 VICTORY Data Bus 40
5.1.2 VICTORY Component Types 40
5.2 MORA Low Latency Bus 41
5.2.1 MORA Low Latency Bus Specifications 41
5.3 MORA Component Types 42
5.3.1 Low Latency Switch <MT91010-V2.4> 44
5.3.2 MORA Device <MT92010-V2.4> 47
5.3.3 MORA Signal Resource Manager <MT92013-V2.4> 53
5.3.4 MORA Signal Port Manager <MT92016-V2.4> 59

5.3.5 Complex Type Definitions ... 61
5.4 Syslog Protocol Data Parameters for MORA <49101-20200707, Pro> ... 92
5.5 Version Information Management Parameters for MORA <49102-20210301, Pro> ... 93
5.6 MORA Schemas and WSDLs <49103-20201002, Pro> ... 94
6 MORA DATA MESSAGING ... 95
6.1 MDM Protocol Specifications <MT96001-V2.4> ... 95
6.1.1 MDM Data Encoding Specification <48605-20160131, Exp> ... 95
6.1.2 MDM Encapsulation Specification <48606-20201002, Exp> ... 95
6.2 MDM Networking Specifications <MT96002-V2.4> ... 98
6.3 MDM Types ... 98
6.3.1 MDM VITA Radio Transport (VRT) (Type 1) Specifications ... 98
6.3.2 MDM Acknowledgement Message (Type 2) Specification <48611-20180928, Exp> ... 127
6.3.3 MDM Time of Day Message (Type 3) Specification <48612-20170531, Exp> ... 128
6.3.4 MDM Signal Port User ID Message (Type 4) Specification <48613-20201002, Exp> ... 129
6.3.5 MDM Health Message (Type 5) Specification <48614-20200707, Exp> ... 133
6.3.6 MDM Command Message (Type 6) Specification <48615-20200707, Exp> ... 135
6.3.7 MDM Switch Group User ID Message (Type 7) Specification <48617-20200707, Exp> ... 137
7 MORA SYSTEM REFERENCE DESIGN ... 141
7.1 Overview ... 141
7.2 Common Hardware for Multiple Missions ... 141
7.3 MORA System Sequence Diagrams ... 142
7.3.1 Component Discovery ... 142
7.3.2 Discovering Available Web Service Interfaces on VICTORY Data Bus ... 143
7.3.3 Retrieving Device Level Information ... 145
7.3.4 Retrieving Signal Resource Capability ... 147
7.3.5 Signal Port Reservation and Release ... 149
7.4 Improved Survivability ... 151
7.4.1 Example Transmit or Receive System ... 151
7.4.2 Radiohead Failover ... 154
7.4.3 SDR Failover ... 155
7.5 Improved Performance ... 156
7.5.1 Transmit Diversity ... 156
7.5.2 Switch Group With Transmit Diversity ... 157
APPENDIX A: MORA ZEROCONF ANNOUNCEMENT STRINGS ... 163
APPENDIX B: MORA WSDLS ... 166
APPENDIX C: MORA SCHEMAS ... 168
APPENDIX D: RESOURCE MANAGEMENT EXAMPLE ... 170
APPENDIX E: MULTIPLE SECURITY DOMAINS Distribution C - Provided Separately
APPENDIX F: RADIOHEAD REFERENCE DESIGN Distribution C - Provided Separately
APPENDIX G: MORA SOFTWARE MAP EXAMPLE Distribution C - Provided Separately

LIST OF TABLES

Table 1 Specification Tag Groups 10
Table 2 Abbreviations and Acronyms 13
Table 3 MORA Definitions 17
Table 4 Recommended VDB Traffic Marking 40
Table 5 Minimum Recommended VICTORY Component Types 40
Table 6 MDM Traffic Marking 42
Table 7 Low Latency Switch <MT91010-V2.4> 45
Table 8 Low Latency Switch Data Interface <MT91011-V2.4> 45
Table 9 Low Latency Switch Data Interface Physical and Data-Link Layer Specifications <MT91012-V2.4> 45
Table 10 Low Latency Copper Data Physical and Data-Link Layer Specifications <MT91013-V2.4> 46
Table 11 Low Latency Fiber Data Physical and Data-Link Layer Specifications <MT91014-V2.1> 46
Table 12 MORA Device <MT92010-V2.4> 47
Table 13 MORA Device Management Interface <MT92011-V2.4> 48
Table 14 MORA Device Operations Interface <MT90016-V2.4> 53
Table 15 MORA Signal Resource Manager <MT92013-V2.4> 53
Table 16 MORA Signal Resource Management Interface <MT92014-V2.4> 54
Table 17 MORA Signal Resource Manager Operations Interface <MT90017-V2.4> 59
Table 18 MORA Signal Port Manager <MT92016-V2.4> 59
Table 19 RF Layer Analog Data Interface <MT90011-V2.1> 59
Table 20 RF Layer Command Interface <MT90012-V2.4> 60
Table 21 RF Layer Context Interface <MT90013-V2.4> 60
Table 22 RF Layer Digital Data Interface <MT90014-V2.4> 61
Table 23 RF Layer Operations Interface <MT90015-V2.4> 61
Table 24 MORA Management Interface Types 94
Table 25 MORA SOAP Component Types 94
Table 26 MDM Protocol Specifications <MT96001-V2.4> 95
Table 27 MDM Layout 95
Table 28 MDM Header Format 96
Table 29 ML2B Interface ID Format 97
Table 30 MDM Types 97
Table 31 MDM Networking Specifications <MT96002-V2.4> 98
Table 32 MDM VRT Message Format 100
Table 33 VRT Packet Header Field 102
Table 34 VRT Packet Types 102
Table 35 TSI Code Types 103
Table 36 TSF Code Types 103
Table 37 Timestamp Meaning by Packet Type/Sub Type/Variant 103
Table 38 MORA Stream ID Format 104
Table 39 Stream ID Bit Field 104
Table 40 ID-Device Types 105
Table 41 VRT Class ID Format 106
Table 42 Information Class Code Subfields 106
Table 43 Packet Class Code Subfields 106
Table 44 VITA 49.2 Context/Command Indicator Field (CIF) Matrix and Bit Assignments 107
Table 45 MORA Reference Point Identifier Field 108
Table 46 State/Event Indicators Field 110
Table 47 State/Event Indicator Field Enable and Indicator Bits 110
Table 48 Signal Payload Packet Data Format Field 111
Table 49 Real/Complex Subfield 111

Table 50 Data Item Format Subfield 111
Table 51 MORA Discrete I/O 32-Bit Field Format 113
Table 52 Coherency Modes 114
Table 53 Test Source Waveforms 114
Table 54 Test Source Delivery Methods 114
Table 55 RF Modes 114
Table 56 MORA Discrete I/O 64-Bit Field Format 115
Table 57 Filter Selection 115
Table 58 Switch Group ID 116
Table 59 Switch State ID 116
Table 60 Buffer Status Field 117
Table 61 Status Subfield 118
Table 62 Signal Data Packet Header 119
Table 63 VRT Trailer Format 119
Table 64 Trailer Enable and Indicator Bits 120
Table 65 Context Packet Header 121
Table 66 MORA Context Fields Matrix 122
Table 67 Command Packet Header 124
Table 68 Control/Acknowledge Mode (CAM) Field for Control Packets 125
Table 69 Control/Acknowledge Mode (CAM) Field for Acknowledge Packets 126
Table 70 Control/Acknowledge Mode (CAM) Field for Control Cancellation Packets 126
Table 71 MORA Control Fields Matrix 126
Table 72 MDM Acknowledgement Message Format 127
Table 73 MDM Acknowledgement Message Response Bit Field 127
Table 74 MDM Acknowledgement Response Meaning 128
Table 75 MDM Time of Day Message Format 128
Table 76 MDM Time of Day Field 129
Table 77 MDM Signal Port User ID Message Format 129
Table 78 Signal Port User ID Field Format 130
Table 79 Signal Port Resource ID and User ID Bit Fields 130
Table 80 MDM Health Message Format 133
Table 81 MDM Command Message Format 135
Table 82 MDM Switch Group User ID Message Format 137
Table 83 Switch Group User ID Field Format 138
Table 84 Switch Group Resource ID Bit Field 138
Table 85 User ID Bit Field 139
Table 86 MORA Zeroconf Announcement Strings 164
Table 87 Recommended VICTORY Zeroconf Announcements for Consumption 164
Table 88 Announcement String TXT Field Descriptions 165
Table 89 MORA WSDLs 167
Table 90 Inherited VICTORY WSDLs 167
Table 91 MORA Schemas 169
Table 92 Inherited VICTORY Schemas 169

LIST OF FIGURES

Figure 1 VICTORY Component Types 23
Figure 2 MORA Specific Component Types 24
Figure 3 MORA Architecture 25
Figure 4 MORA Top-Down Perspective 26
Figure 5 MORA Transitional RF System Top-Down Perspective 28
Figure 6 MORA Functional Perspective 29
Figure 7 MORA Device Type Resource Functionality 31
Figure 8 MORA Processing Resource Blocks 34
Figure 9 MORA Direction Finding Engine Processing Port 35
Figure 10 MORA Resource Management Process 37
Figure 11 MORA Basic System Composition 38
Figure 12 Implementation of Component Types within a MORA Device for Signal Resources 43
Figure 13 Alternate Proxy Implementation of Signal Resources 44
Figure 14 VRT Message Structure 101
Figure 15 VRT Prologue Structure 102
Figure 16 MORA Mapping of Switch Groups and States Example 117
Figure 17 Signal Data Packet Format 118
Figure 18 Context Packet Format 121
Figure 19 MORA Command Packet Taxonomy 123
Figure 20 Command Packet Format 124
Figure 21 MORA Acknowledge Packet Variants in Response to Control Packets 125
Figure 22 MORA Acknowledge Packet Variants in Response to Control Cancellation Packets 125
Figure 23 Health Status Field #1 Format 134
Figure 24 Health Status Field #2 Format 135
Figure 25 Command Field Format 136
Figure 26 Configuration Field Format 136
Figure 27 Waveform Operation Field Format 137
Figure 28 MORA Reference Design 141
Figure 29 Component Discovery 142
Figure 30 Version Information Web Service Example 144
Figure 31 Retrieving Device Level Information 146
Figure 32 Retrieving Signal Port Capability 148
Figure 33 Signal Port Reservation and Release 149
Figure 34 MORA Transmit or Receive 151
Figure 35 Common Hardware for Multiple Missions 154
Figure 36 Radiohead Failover 155
Figure 37 SDR Failover 156
Figure 38 Transmit Diversity 157
Figure 39 Switch Control with Transmit Diversity 158
Figure 40 Two Application MORA Resource Management Example 171

1 INTRODUCTION

1.1 Objectives

The objective of this document is to identify and describe the architecture and specifications associated with I2WD's Modular Open RF Architecture (MORA).

MORA is an extension to the *Vehicular Integration for C4ISR/EW Interoperability (VICTORY) Architecture* [1], which is an Open System Architecture (OSA) for integrating electronics onto military platforms. VICTORY is developed and maintained by the U.S. Army VICTORY Standards Support Office (VSSO), an organization hosted by the U.S. Army Program Executive Office for Ground Combat Systems (PEO-GCS), and governed by an Executive Steering Group (ESG) made up of leadership of the PEOs within the Assistant Secretary of the Army (Acquisition, Logistics, and Technology) (ASA(ALT)). MORA is currently being developed and maintained by the U.S. Army Command, Control, Computers, Communications, Cyber, Intelligence, Surveillance and Reconnaissance Center (C5ISR Center) Intelligence and Information Warfare Directorate (I2WD).

This document is intended for material developers and system integrators who seek to leverage open architectures to implement multifunction radio frequency (RF) capabilities on tactical platforms and to provide a framework to guide the implementation of MORA interface specifications.

1.2 Motivations for a Modular Open RF Architecture

RF products spanning multiple functions have become increasingly critical to the warfighter. Military use of the electromagnetic spectrum now includes communications, EW, intelligence, and mission command systems. Due to the urgent needs of counterinsurgency operations, various quick reaction capabilities (QRCs) have been fielded to enhance warfighter capability. Although these QRCs were highly successful in their respective missions, they were designed independently, resulting in significant challenges when integrated on a common platform. Current RF system implementations are typically single-mission focused with closed or proprietary interfaces between stove-piped resources. Specific limitations of this legacy stove-piped approach include the following:

- Inordinate consumption of size, weight, and power (SWaP) due to duplicated hardware such as tuners, power amplifiers, antennas, processors, displays, and user interface devices.
- Independent concurrent operation with overlapping frequency bands resulting in RF spectral conflict and mutually-degraded effectiveness.
- Closed systems and interfaces creating vendor lock-in and reduced competition for maintenance, upgrades, and user training.
- Inability to perform rapid technology insertion to address emerging threats and keep pace with commercial technology.
- Preclusion of multifunctional/multi-nodal techniques and data sharing (e.g., situational awareness (SA)).

1.3 Approach

MORA addresses these limitations by defining an open architecture for multifunction missions that decomposes monolithic radio systems into high-level components with well-defined functions and interfaces. Instead of developing a new open architecture from the ground-up, MORA is an extension to the scope of the open architecture defined by VICTORY. To avoid redundancy, the reader should review the portions of the *Vehicular Integration for C4ISR/EW Interoperability (VICTORY) Architecture* [1] and *Vehicular Integration for C4ISR/EW Interoperability (VICTORY) Standard Specifications* [2] documents that are referenced within this MORA specification.

VICTORY defines an Ethernet-based network architecture for integrating electronic systems within military platforms, as well as interface specifications for sharing sensor and data products, managing configuration, states, modes, and health of the infrastructure and applications, transporting data with quality of service (QoS), and implementing necessary information assurance (IA) controls to protect the system and its data from cyber threats. VICTORY can support the non-time critical messaging and management of RF systems, which include setup, tasking, and monitoring of RF processing chains, and transport of lower-volume processed data messages. Extensions to VICTORY are required to support transport of large-volume signal data streams and to standardize the access and low latency control of the RF chain.

MORA extends the scope of VICTORY by adding a low latency transport mechanism, data streaming interfaces, new message types, management operations, and functional concepts that are specific to RF applications. Examples of RF applications include voice communications, data communications, and EW.

The MORA functional decomposition maximizes hardware sharing while minimizing added complexity and cost due to modularization. Existing software defined radio (SDR) architectures concentrate on modularizing the digital signal processing and application functions of radio applications. MORA achieves significant SWaP savings by allowing power amplifiers (PAs) and antennas, some of the biggest consumers of SWaP on the platform, to be shared across systems. MORA separates the signal resources from processing resources that implement the actual radio application, exposing points in the architecture that were not previously accessible. This provides system integrators with the flexibility to insert best-of-breed third-party capabilities into the processing chain to address technical challenges and emerging requirements.

Modularizing components such as PAs, which require greater heat dissipation, allows system integrators to place them in more ideal locations with better cooling and airflow, such as outside the platform. These semi-perishable components are decoupled from more sensitive and expensive components, which are still located inside the platform. Co-locating PAs and antennas further reduces power consumption by minimizing the length of high-power cable runs and associated cable loss. Overall system efficiency and performance is thereby improved by requiring less power to achieve the same over-the-air (OTA) effects. Routing low power RF signals between components within the platform enables hot switching at rapid speeds, which is required for time switched sharing of PAs and antennas. Resulting capabilities include transmit diversity, which mitigates multipath interference by transmitting the same signal from two or more antennas. Although this is not a new technique, it is now possible without additional SWaP as systems can share the same antennas.

By divorcing specific capabilities (i.e., radio applications) from the hardware they run on, MORA makes hardware a commodity that can be dynamically configured based on mission objectives. Because most RF applications have the same underlying hardware requirements, a radio's personality can be changed simply by provisioning it with new software. Although the concept of an SDR is not unique to MORA, the standardized interfaces that MORA defines enable monitoring and management of SDRs via common user interfaces and platform automation. Use of common hardware allows system integrators to establish pooled resources that provide varied levels of availability. A dedicated spare can be included that provides 1xN redundancy to tolerate the failure of a single component without any loss of capability. On platforms where redundancy is not an option, MORA allows the warfighter to select which capability is lost by preempting a lower priority mission. As an example, the warfighter may choose to repurpose an SDR currently performing a communications mission to restore a higher priority EW mission.

1.4 Scope

MORA is not a material solution, but rather an architecture and a set of open interface standards that defines an RF functional decomposition and associated interfaces. MORA open interface standards promote modularity, compatibility, interoperability, and portability of capabilities while allowing proprietary hardware, software, and algorithms to be utilized. MORA interfaces will manifest in mission solutions once the acquisition community references the MORA specification in future procurements while industry incorporates MORA into their product offerings. It is incumbent on the system integrator to leverage MORA, as appropriate, to address today's size, weight, and power - cost (SWaP-C) requirements while still maintaining sufficient flexibility to address tomorrow's technical challenges.

1.5 Maturity Levels

The "Maturity Level" is used to describe the maturity level of a specification and is designated using one of the following abbreviations:

- **Pre** - Preliminary
- **Inf** - Informational
- **Exp** - Experimental
- **Pro** - Proposed Standard
- **Dft** - Draft Standard
- **Std** - MORA Standard

The meanings and definitions of these terms are given in and governed in Section "Maturity Levels" of the *Vehicular Integration for C4ISR/EW Interoperability (VICTORY) Standard Specifications* [2]. Those meanings/definitions are, in turn, based on *Internet Engineering Task Force (IETF) Request for Comment (RFC) 2026: The Internet Standards Process* [3].

1.6 Document Conventions

The conventions and terms used in this document are consistent with, and governed by, Section "Document Conventions" of the VICTORY Standard Specifications document. MORA utilizes VICTORY specification tags and key word conventions. For ease of reference, the portions of the VICTORY document on "specification tag", "VICTORY Type Tag", and "Standards Key Words" are repeated in this section.

1.6.1 Specification Tags

Specification tags are used to track individual specifications in a manner that is independent of the organization of the document. A specification tag is defined as follows:

```
<Spec ID-Date of Publication, Maturity Level>
```

The "Spec ID" is a 5-digit identification number with a range of 00000-99999. Spec ID shall be unique within the VICTORY specifications. This number is comprised of two parts: a 2-digit specification group followed by a 3-digit identifier. Each specification group may have identifiers ranging from 001 to 999, excluding 000. Table 1 below provides the list of possible specification groups.

Table 1 Specification Tag Groups

Specification Group	Group Identifier
Unused	00
Data Transport Interfaces	01
Time Synchronization Interfaces	02
Non-Networked Nodes Interfaces	05
Common Management Parameters	10
VDB Management Interfaces	11
Infrastructure Node Management Interfaces	12
End Node Management Interface	13
Information Assurance Management Interfaces	14
C4ISR/EW Application Management Interfaces	15
Platform Systems Management Interfaces	16
Application Data Interfaces	20
VICTORY Configuration Language	30
Access Control Interfaces	40
MORA RF Interfaces	47
MORA Low Latency Bus	48
MORA Management Interfaces	49

The "Date of Publication" is the date of the last update of the specification.

The VICTORY Type (VT) Tag is an alphanumeric identification tag with a prefix of "VT", followed by a numeric range of 50000-89999, and ending in the version number of the applicable VICTORY Specification document. These tags are used to identify *tables* - system, component, and/or interface type tables - which contain applicable specification titles and associated spec tags, and/or other VT titles/tags to identify other applicable specifications.

```
<VT12345-V1.5>
```

Similarly, a MORA Type (MT) Tag is used in this document and is directly analogous to the previously described VT Tag, with the exceptions of leading with "MT" vice "VT", and the trailing version number refers to the applicable MORA Specification document. MT Tags have a numeric range of 90000-99999.

1.6.2 Standards Key Words

In this document, key words are used to signify the requirements in the standards. This section defines these words (derived from IETF RFC 2119) as they should be interpreted in the VICTORY specification. Note that the force of these words is modified by the requirement level of the specification in which they are used.

- SHALL: This word means that the definition is an absolute requirement of the specification.

- SHALL NOT: This phrase means that the definition is an absolute prohibition of the specification.
- SHOULD: This word means that there may exist valid reasons, in particular circumstances, to ignore a particular item, but the full implications must be understood and carefully weighed before choosing a different course.
- SHOULD NOT: This phrase means that there may exist valid reasons, in particular circumstances, when the particular behavior is acceptable or even useful, but the full implications should be understood and the case carefully weighed before implementing any behavior described with this label.
- MAY: This word means that an item is truly optional. One implementation may choose to include the item because a particular marketplace requires it, or because the implementation enhances the product, while another implementation may omit the same item. An implementation that does not include a particular option SHALL be prepared to interoperate with another implementation that does include the option, though perhaps with reduced functionality. In the same vein, an implementation that does include a particular option SHALL be prepared to interoperate with another implementation that does not include the option (except, of course, for the feature the option provides).

1.6.3 MORA Definitions

Key MORA terms are formally defined for clarity in section titled "MORA Definitions Table."

1.7 Compliance Statement

There is no concept of overall MORA compliance. MORA defines a collection of open interface standards. Compliance is specified, implemented, claimed, tested, and documented based on the open interface standards that are relevant for the specific device or system in question.

2 REFERENCED DOCUMENTS

The documents directly referenced herein are enumerated as follows.

[1] Vehicular Integration for C4ISR/EW Interoperability (VICTORY) Architecture, Version: A4.
[2] Vehicular Integration for C4ISR/EW Interoperability (VICTORY) Standard Specifications, Version 1.9.
[3] Internet Engineering Task Force (IETF) Request for Comment (RFC) 2026: The Internet Standards Process - Revision 3.
[4] Internet Engineering Task Force (IETF) Request for Comment (RFC) 768: User Datagram Protocol (UDP).
[5] Internet Engineering Task Force (IETF) Request for Comment (RFC) 791: Internet Protocol.
[6] Internet Engineering Task Force (IETF) Request for Comment (RFC) 2236: Internet Group Management Protocol, Version 2.
[7] Internet Engineering Task Force (IETF) Request for Comment (RFC) 4541: Considerations for Internet Group Management Protocol (IGMP) and Multicast Listener Delivery (MLD) Snooping Switches.
[8] ANSI/VITA 49.2-2017 VITA Radio Transport (VRT) Standard for Electromagnetic Spectrum: Signals and Applications, Revision 00.55 (VITA ballot approved/ANSI ballot in process).
[9] MIL-STD-1275E, DoD INTERFACE STANDARD: Characteristics of 28 Volt DC Electrical Systems in Military Vehicles, 22 March 2013.
[10] "IEEE Standard for Ethernet" in IEEE Std 802.3-2018 (Revision of IEEE Std 802.3-2015), vol., no., pp.1-5600, 31 Aug. 2018, doi: 10.1109/IEEESTD.2018.8457469

3 ABBREVIATIONS, ACRONYMS, AND DEFINITIONS

3.1 ABBREVIATIONS AND ACRONYMS

Table 2 Abbreviations and Acronyms

Abbreviation/Acronym	Definition
ACK	Acknowledge
ADC	Analog to Digital Converter
AMM	Aperture Manifold Management
ANSI	American National Standards Institute
ANT	Antenna
APG	Aberdeen Proving Ground
API	Application Programming Interface
ARI	Analog Reference Input
ARO	Analog Reference Output
ARX	Analog Receive
ASCII	American Standard Code for Information Interchange
ATR	Analog Transmit and/or Receive
ATX	Analog Transmit
BBS	Baseband Sample
BMC	Baseband Multi-Channel
BSC	Baseband Single-Channel
C4ISR/EW	Command, Control, Communications, Computers, Intelligence, Surveillance, Reconnaissance/Electronic Warfare
C5ISR Center	Command, Control, Computers, Communications, Cyber, Intelligence, Surveillance and Reconnaissance Center
CAM	Control/Acknowledge Mode
CIF	Context/Command Indicator Field
CLK	Clock
COMP	Component
COUNT	Context Packet Count
CPU	Central Processing Unit
DAC	Digital to Analog Converter
dB	Decibel
dBc	Decibels Relative to the Carrier
dBi	Decibels Relative to an Isotropic Radiator
dBm	Decibel-milliwatt
DDC	Digital Down Converter
DF	Direction Finding

Abbreviation/Acronym	Definition
DFE	Direction Finding Engine
DFIB	Discrete Field Indicator Bits
DNS	Domain Name System
DoD	Department of Defense
DRI	Digital Reference Input
DRO	Digital Reference Output
DRX	Digital Receive
DSCP	Differentiated Services Code Point
DSP	Digital Signal Processor
DTR	Digital Transmit and/or Receive
DTX	Digital Transmit
DUC	Digital Up Converter
EC	Error Code
EIF	Error Indicator Field
ES	Electronic Support
EW	Electronic Warfare
EWFS	Error/Warning Fields
Exp	Experimental
FFT	Fast Fourier Transform
FPGA	Field-Programmable Gate Array
Gb	Gigabyte
GbE	Gigabit Ethernet
GPP	General Purpose Processor
GPS	Global Positioning System
GPU	Graphics Processing Unit
HMI	Human Machine Interface
HPA	High Power Amplifier
Hz	Hertz
IA	Information Assurance
IANA	Internet Assigned Numbers Authority
ID	Identification/Identifier
IEEE	Institute of Electrical and Electronic Engineers
IETF	Internet Engineering Task Force
IF	Intermediate Frequency
IFS	IF Sample
IGMP	Internet Group Management Protocol
IMC	Intermediate Frequency Multi-Channel
IP	Internet Protocol
IPSIZE	Item Packing Field Size

Abbreviation/Acronym	Definition
IQ	In-phase and Quadrature
ISC	IF Single-Channel
I2WD	Intelligence and Information Warfare Directorate
LAN	Local Area Network
LNA	Low Noise Amplifier
LOB	Line of Bearing
MAC	Media Access Control
MAC	Message Authentication Code
MDM	MORA Data Message
MIL STD	Military Standard
ML2B	MORA Low Latency Bus
MORA	Modular Open RF Architecture
MT	MORA Type
MUI	ML2B Unique Identifier
OA&M	Operations, Administration, and Maintenance
OSA	Open System Architecture
OSC	Oscillator
OTA	Over-The-Air
OTH	Other (MORA Device Type)
PA	Power Amplifier
PARMS	Parameters
PNT	Position, Navigation, and Timing
QoS	Quality of Service
QRC	Quick Reaction Capability
RAM	Random Access Memory
RC	Real or Complex
RF	Radio Frequency
RFC	RF Conditioning
RCD	RF Conditioning and Distribution
RFD	RF Distribution
RFS	RF Sample
RFT	RF Translation
RHD	Radiohead
RMC	Radio Frequency Multi-Channel
RMON	Remote Network Monitoring
RSC	Radio Frequency Single-Channel
RSS	RF Spectrum Sensor
RX	Receive
RXO	Receive Only

Abbreviation/Acronym	Definition
SDC	Signal Domain Conversion
SDR	Software Defined Radio
SNMP	Simple Network Management Protocol
SOAP	Simple Object Access Protocol
SPM	Signal Port Manager
SPU	Shared Processing Unit
S&E	State and Event
SWaP	Size, Weight, and Power
SWaP-C	Size, Weight, and Power - Cost
TAR	Transmit and Receive
TBD	To Be Determined
TLS	Transport Layer Security
TOR	Transmit or Receive
TSF	Timestamp Fractional
TSI	Timestamp Integer
TX	Transmit
TXO	Transmit Only
UDP	User Datagram Protocol
UUID	Universally Unique Identifier
UTC	Coordinated Universal Time
VDB	VICTORY Data Bus
VDC	Volt Direct Current
VDM	VICTORY Data Message
VICTORY	Vehicular Integration for (C4ISR) Command, Control, Communication, Computers, Intelligence, Surveillance, Reconnaissance /(EW) Electronic Warfare (EW) Interoperability
VITA	VMEbus International Trade Association
VLAN	Virtual Local Area Networks
VMEbus	Versa Module Europa bus
VRT	VITA Radio Transport
WSDL	Web Service Description Language
VT	VICTORY Type
XML	eXtensible Markup Language
Zeroconf	Zero Configuration Networking

3.2 MORA Definitions Table

Table 3 MORA Definitions

MORA Device	An entity within a MORA system that contains signal resources and/or processing resources in support of receive and/or transmit operations. MORA Device types include: Radiohead (RHD), RF Conditioning & Distribution (RCD), and Software Defined Radio (SDR). MORA Device subtypes include: Receive Only (RXO), Transmit Only (TXO), Transmit or Receive (TOR), and Transmit and Receive (TAR).	
MORA Device Types	**Radiohead (RHD) Device**	A MORA Device that contains ANT signal resources, may contain RFC, RFD, RFT, and/or SDC signal resources, and may contain processing resources in support of receive and/or transmit operations.
	RF Conditioning and Distribution (RCD) Device	A MORA Device that may contain RFC, RFD, RFT, and/or SDC signal resources and may contain processing resources in support of receive and/or transmit operations.
	Software Defined Radio (SDR) Device	A MORA Device that contains processing resources, and may contain RFC, RFD, RFT, and/or SDC signal resources in support of receive and/or transmit operations.
MORA Device Sub Types	**Receive Only (RXO) Device Sub Type**	A MORA Device within a MORA system that contains signal resources and/or processing resources in support of receive operations.
	Transmit Only (TXO) Device Sub Type	A MORA Device within a MORA system that contains signal resources and/or processing resources in support of transmit operations.
	Transmit or Receive (TOR) Device Sub Type	A MORA Device within a MORA system that contains signal resources and/or processing resources in support of either transmit or receive operations.
	Transmit and Receive (TAR) Device Sub Type	A MORA Device within a MORA system that contains signal resources and/or processing resources in support of simultaneous transmit and receive operations.
MORA Signal Resource	A resource within a MORA Device that captures, radiates, conditions, distributes, translates, and/or converts RF signals in support of receive and/or transmit operations in a MORA system. Signal Resource types include: Antenna (ANT), RF Conditioning (RFC), RF Distribution (RFD), RF Frequency Translation (RFT), and Signal Domain Conversion (SDC).	
MORA Signal Resource Types	**Antenna (ANT) Resource Type**	A resource within a MORA Device that captures or radiates electromagnetic energy in support of receive and/or transmit operations. An example of an ANT resource is an antenna or an antenna array.
	RF Conditioning (RFC) Resource Type	A resource within a MORA Device that conditions conducted RF signals in support of receive and/or transmit operations. Examples of RFC resources include low noise amplifiers (LNAs), filters (i.e., low pass, high pass, band pass, and band reject), and high power amplifiers (HPAs).

	RF Distribution (RFD) Resource Type	A resource within a MORA Device that distributes conducted RF signals in support of receive and/or transmit operations. Examples of RFD resources include power dividers, power combiners, and RF switches.
	RF Frequency Translation (RFT) Resource Type	A resource within a MORA Device that frequency translates conducted RF signals in support of receive and/or transmit operations. Examples of RFT analog domain resources include mixers and local oscillators, RF tuners, frequency upconverters, and frequency downconverters. Examples of RFT digital domain resources include digital down converters (DDCs) and digital up converters (DUCs).
	Signal Domain Conversion (SDC) Resource Type	A resource within a MORA Device that converts the domain (analog vs. digital) of conducted RF signals in support of receive and/or transmit operations. Examples of SDC resources include analog to digital converters (ADCs) and digital to analog converters (DACs).
MORA Signal Port	A logical partition of signal resources with an external access point on a MORA Device in support of receive and/or transmit operations in an RF system. A MORA Signal Port consists of analog (radio frequency, intermediate frequency, or baseband) or digital (real or complex IQ in time or frequency domains) signals transported between devices in coaxial, copper wire, or fiber optic interconnect cables. MORA Signal Port classes include the Analog Signal, Digital Signal and Reference Signal classes.	
MORA Signal Port Class	**Analog Signal Port Class**	A MORA Signal Port operating within the receive and/or transmit chain containing an analog representation, in the time domain, of radio frequency, intermediate frequency, or baseband signals transported between MORA Devices on coaxial or fiber optic interconnect cables. The Analog Signal Port Class includes the following signal port types: Analog Receive (ARX), Analog Transmit (ATX), and Analog Transmit and/or Receive (ATR).
MORA Analog Signal Port Types	**Analog Receive (ARX) Signal Port**	A unidirectional signal port operating within the system's receive chain containing an analog representation, in the time domain, of radio frequency, intermediate frequency, or baseband signals transported between MORA Devices on coaxial or fiber optic interconnect cables.
	Analog Transmit (ATX) Signal Port	A unidirectional signal port operating within the system's transmit chain containing an analog representation, in the time domain, of radio frequency, intermediate frequency, or baseband signals transported between MORA Devices on coaxial or fiber optic interconnect cables.
	Analog Transmit and/or Receive (ATR) Signal Port	A bi-directional, half or full duplex signal port operating within the system's receive and/or transmit chain containing an analog representation, in the time domain, of radio frequency, intermediate frequency, or baseband signals transported between MORA Devices on coaxial or fiber optic interconnect cables.
MORA Analog Signal Port Sub Types	**ARX/ATX/ATR Signal Port Sub Types**	ARX, ATX, and ATR signal port subtypes include: RF Single-Channel (RSC), IF Single-Channel (ISC), and Baseband Single-Channel (BSC).
MORA Signal Port Class	**Digital Signal Port Class**	A MORA Signal Port operating within the receive and/or transmit chain containing a digital representation of radio frequency, intermediate frequency, or baseband signals transported between devices on coaxial or fiber optic interconnect cables. The Digital Signal Port Class includes the following signal port types: Digital Receive (DRX), Digital Transmit (DTX), and Digital Transmit or Receive (DTR).

MORA Digital Signal Port Types	**Digital Receive (DRX) Signal Port**	A unidirectional signal port operating within the system's receive chain containing a digital representation, in the time or frequency domain, of radio frequency, intermediate frequency, or baseband signals transported between devices on coaxial or fiber optic interconnect cables.
	Digital Transmit (DTX) Signal Port	A unidirectional signal port operating within the system's transmit chain containing a digital representation, in the time or frequency domain, of radio frequency, intermediate frequency, or baseband signals transported between devices on coaxial or fiber optic interconnect cables.
	Digital Transmit and/or Receive (DTR) Signal Port	A bi-directional, half or full duplex signal port operating within the system's receive and/or transmit chain containing a digital representation, in the time or frequency domain, of radio frequency, intermediate frequency, or baseband signals transported between devices on coaxial or fiber optic interconnect cables.
MORA Digital Signal Port Sub Types	**DRX/DTX/DTR Sub Types**	DRX, DTX, and DTR signal port sub types include: RF Single-Channel (RSC), RF Multi-Channel (RMC), IF Single-Channel (ISC), IF Multi-Channel (IMC), Baseband Single-Channel (BSC), and Baseband Multi-Channel (BMC).
MORA Signal Port Class	**Reference Signal Port Class**	A MORA Signal Port that supports the MORA system containing an analog or digital representation of reference signals transported between devices on coaxial or fiber optic interconnect cables. The Reference Signal Port Class includes the following signal port types: Analog Reference Input (ARI), Analog Reference Output (ARO), Digital Reference Input (DRI), and Digital Reference Output (DRO).
MORA Analog Reference Signal Port Types	**Analog Reference Input (ARI) Signal Port**	A unidirectional signal port that accepts an analog representation, in the time domain, of a reference signal transported between devices on coaxial or copper interconnect cables.
	Analog Reference Output (ARO) Signal Port	A unidirectional signal port that generates an analog representation, in the time domain, of a reference signal transported between devices on coaxial or copper interconnect cables.
MORA Analog Reference Signal Port Sub Types	**ARI/ARO Signal Port Sub Types**	ARI and ARO signal port subtypes include: Sinusoidal Oscillator (OSC), Reference Clock (CLK), RF Sample (RFS), IF Sample (IFS), and Baseband Sample (BBS).
MORA Digital Reference Signal Port Types	**Digital Reference Input (DRI) Signal Port**	A unidirectional signal port that accepts a digital representation, in the time or frequency domain, of a reference signal transported between devices on fiber or copper interconnect cables.
	Digital Reference Output (DRO) Signal Port	A unidirectional signal port that generates a digital representation, in the time or frequency domain, of a reference signal transported between devices on fiber or copper interconnect cables.
MORA Digital Reference Signal Port Sub Types	**DRI/DRO Signal Port Sub Types**	DRI and DRO signal port subtypes include: RF Sample (RFS), IF Sample (IFS), and Baseband Sample (BBS).
MORA Processing Resource	A resource within a MORA Device that processes signal data into information, processes information into signal data, or further processes information in support of receive and/or transmit operations in a MORA system. A processing resource can contain either one signal port and one processing port or two processing ports.	

MORA Processing Ports	A logical partition of processing resources with an external access point on a MORA Device in support of receive and/or transmit operations in an RF system. Processing ports include management and data interfaces on the VICTORY Data Bus (VDB) and may also interface with signal resources through signal ports on the MORA Low Latency Bus (ML2B). The information consists of digital formats transported between devices in copper wire or fiber optic interconnect cables.

4 ARCHITECTURE

The Modular Open RF Architecture (MORA) and its interfaces, herein defined, expand the value of VICTORY by supporting complex Radio Frequency (RF) missions in an OSA environment. Specifically, MORA decomposes the RF system by resource functions to promote efficiency, enable resource sharing, and support low-risk reuse in future capability insertions while enabling multi-mission flexibility in a single RF node.

4.1 VICTORY Overview

The VICTORY initiative is developing a framework to enable the integration of C4ISR/EW systems on military platforms. This framework consists of a network-based architecture, validated interface specifications, reference designs, a reference software library, and a compliance test suite. VICTORY focuses on adopting, adapting, or authoring open standards through a standards body consisting of Government, Industry, and Academia.

The central structure of the VICTORY architecture defines network infrastructure known as the VICTORY Data Bus (VDB), shared data services, shared hardware devices, management services, data protection, and attribute-based access control. Shared data services foster commonality by providing information required by most C4ISR/EW systems such as time synchronization, position, orientation, and direction of travel. Shared hardware devices reduce SWaP impacts by allowing systems to use common resources and user interface devices. The IA architecture enables “defense in depth” security designs and supports many IA requirements and levels. Access control services provide authentication of entities and authorization for access to resources which becomes increasingly important as current-force systems move towards network-centricity.

VICTORY defines components/systems with network-based messaging interfaces for data transport, data dissemination, management, and access control. Data transport interfaces define physical to transport layer protocols for data delivery, QoS, and signaling that leverage Ethernet and Internet Protocol (IP). Data interfaces define higher layer protocols for application data format, encoding, and encapsulation that primarily use eXtensible Markup Language (XML) encapsulated in User Datagram Protocol (UDP). Management interfaces enable configuration and control of each component/system using Simple Object Access Protocol (SOAP), web services, and Simple Network Management Protocol (SNMP). Status reporting and fault management is accomplished using Syslog and Remote Network Monitoring (RMON). Zero Configuration Networking (Zeroconf) can be used for service and node auto-discovery to enable plug-and-play functionality on the VDB.

The VICTORY architecture is organized into VDB component types (e.g., switch, router, and shared processing unit), C4ISR/EW systems and component types (e.g., data radio and networked audio data source), and platform system types (e.g., automotive bus, power distribution unit, and remote weapon station). The VDB enables both integration of C4ISR/EW systems and interfaces to platform systems. Multiple component types and system types are instantiated in a VDB design based on the functionality required.

MORA leverages various VICTORY component types to provide infrastructure (e.g., switch), shared data services (e.g., time synchronization, position, orientation, and direction of travel services), shared computing (e.g., shared processing unit), and access control (e.g., authentication, policy decision, policy enforcement, policy store, and attribute store services).

The aspects of VICTORY that are leveraged by MORA include the following:

- VICTORY Data Bus - MORA implements a VDB that provides:
    - A core transport for delivery of data with QoS
    - Shared processing resources with a standard Application Programming Interface (API)

    - Network-based interfaces for managing (configuring, controlling, and managing the health of) the network infrastructure
    - Defined facilities for access control and protection of data confidentiality
        - Access control (e.g., authentication, policy decision, policy enforcement, policy store, and attribute store services)
    - A set of shared data services commonly required in systems
- Key component types - a minimal VDB implementation requires two component types that imply hardware support:
    - Shared Processing Unit (SPU)
    - Switch

  MORA down-selects from the options available in the VICTORY SPU and Switch specifications by specifying a profile of the specifications to ensure that the performance and quality of service required by MORA applications will be supported
- Shared position, navigation, and timing (PNT) - MORA leverages the VICTORY component types that implement shared data services on the VDB to ensure that PNT information can be shared with the MORA system. These component types include:
    - Position Service
    - Direction of Travel Service
    - Orientation Service
    - Time Synchronization Service
    - Global Positioning System (GPS) Receiver
- VICTORY features - VICTORY defines a core set of features that are applied to MORA component types. MORA leverages the following VICTORY features:
    - Publish-subscribe style data streams
    - Web-services style Management Interfaces for configuration and control
    - Syslog-based health monitoring
    - Zero Configuration Networking (Zeroconf) based auto-discovery mechanisms

These VICTORY component types and their specifications can be found in *Vehicular Integration for C4ISR/EW Interoperability (VICTORY) Architecture* [1] and *Vehicular Integration for C4ISR/EW Interoperability (VICTORY) Standard Specifications* [2], respectively. Figure 1 below highlight the minimum set of VICTORY component types recommended for a MORA system.

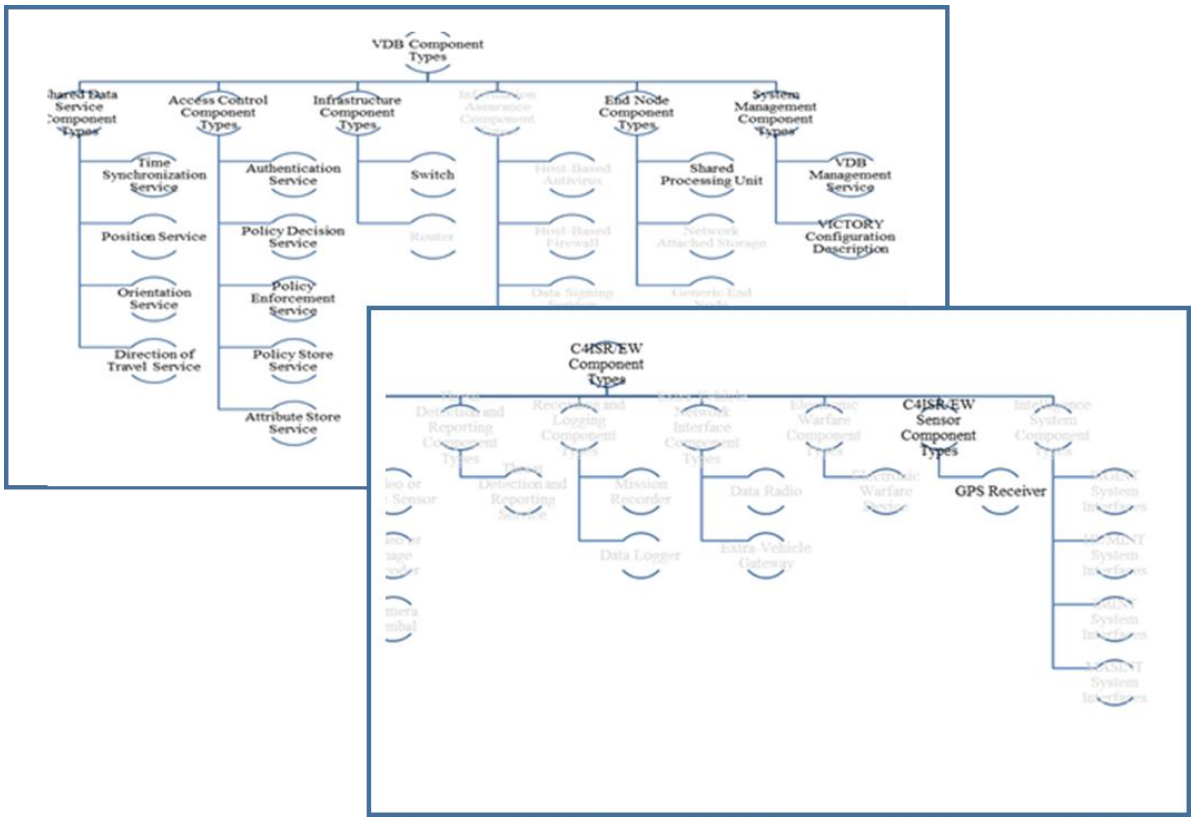

Figure 1 VICTORY Component Types

4.2 MORA Overview

MORA extends the scope of VICTORY by adding a low latency transport mechanism, data streaming interfaces, new message types, management operations, and functional concepts that are specific to RF applications. Examples of RF applications include voice communications, data communications, and EW.

MORA can be extremely useful in implementing modular, flexible RF systems for performing multiple missions with very high resource efficiency. In basic terms, a MORA system consists of an integration of multiple devices utilizing a two network (bus) topology. These two networks enable MORA systems to build upon VICTORY's accomplishments while also enabling new, unique MORA features such as low latency message control signaling to replace discrete signaling.

The MORA extension of VICTORY modularizes RF missions, which require additional capabilities including:

- Resource management and monitoring of the operation of the RF devices and applications.
- Dependable, low latency, and high-speed access and transport of high-volume digital RF signal data sample streams.
- Message based, real-time (low latency) control of the RF chain including antenna arrays, RF switches, RF filters and gain stages, frequency converters, analog to digital converters (ADC), digital analog converters (DAC), field programmable gate arrays (FPGA), general purpose processors (GPP), and digital signal processors (DSP).
- Formatting, encoding, encapsulation, transport, and routing of messages between the MORA and VICTORY components.

The MORA Low Latency Bus (ML2B) extends VICTORY by introducing an addressable bus for real-time communication. The ML2B provides deterministic message delivery with ultra-low latency (i.e., less than 10

microseconds). Latency is defined as the overall time to send/receive a message and includes transmission, propagation, and switch delays. The ML2B replaces current point-to-point discrete signals (e.g., transistor-transistor logic) between MORA components. Specific uses of the ML2B include transmit/receive switching, blanking, and tuning messages. Use of an addressable bus, vice point-to-point signals, improves scalability of the MORA architecture and enables component distribution throughout the platform. The ML2B can also be used for digital RF, including real-time control, and delivery of high volume, high rate signal data.

The ML2B uses 10 Gigabit Ethernet (10GbE) or greater due to its ubiquity in commercial products. Since "when" a device can send a message is as important as "how long" it takes for the message to be delivered, deterministic protocols that use a scheduling approach are not appropriate as they limit the maximum message rate. MORA achieves near-deterministic message delivery by using a "fat pipe" to send very small control messages that receive priority in the network based on QoS policies. Current discrete signals typically convey binary data (i.e., 0 or 1) that can also be conveyed through the use of control messages over the ML2B that will fit within a minimum size Ethernet frame (i.e., 64 bytes). Signal data messages over the ML2B may use larger packets, such as jumbo frames (i.e., 9000 bytes), to improve protocol efficiency. The combination of high throughput and QoS mechanisms reduce the probability that buffering delays will occur. This is likely further reduced by the fact that most commercial switches are able to switch at line rate, which limits the potential for network contention to traffic to/from the same device.

A combination of VICTORY and MORA specific component types define the interface(s) and transport methods with which the devices in a system interact with one another. The MORA specific component types include the Low Latency Switch, MORA Device, MORA Signal Resource Manager, MORA Processing Port(s), and MORA Signal Port Manager, as depicted in Figure 2 below.

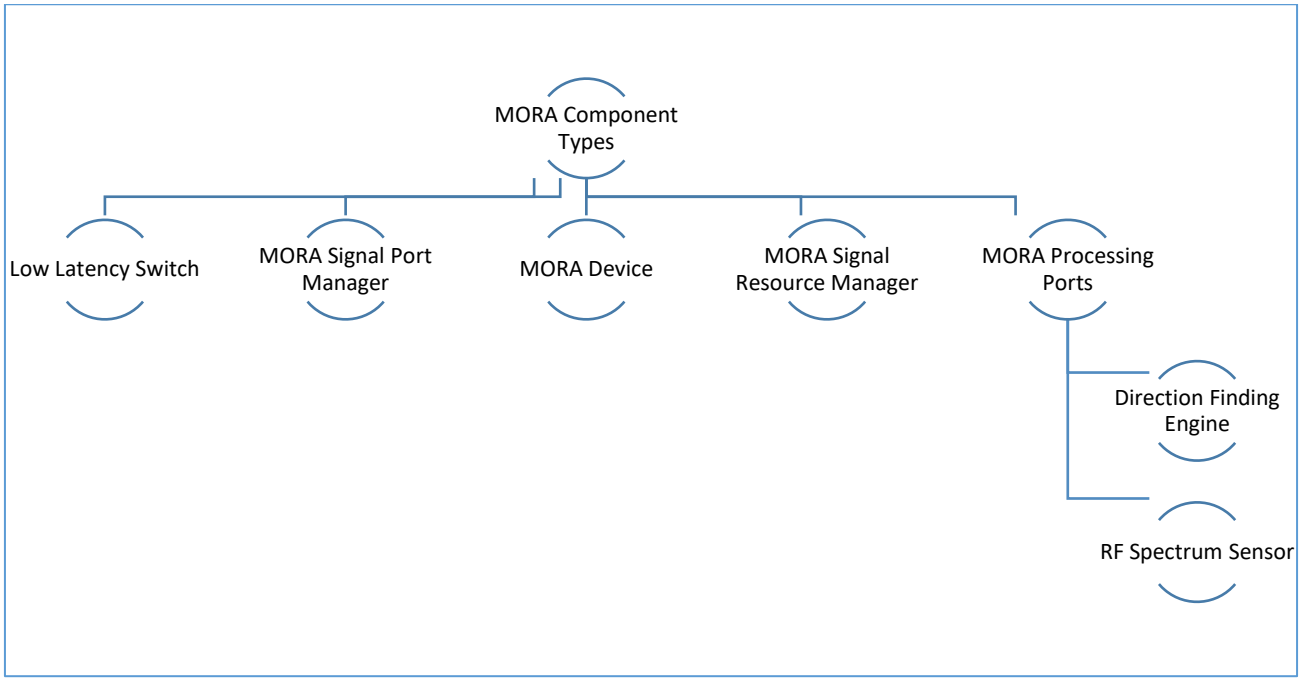

Figure 2 MORA Specific Component Types

MORA decomposes a monolithic radio system into three different device types including Software Defined Radio (SDR), Radiohead (RHD), and RF Conditioning and Distribution (RCD). Other VICTORY devices and their component types are recommended to complete the system functionality required by RF missions. The ML2B supports low latency, highly deterministic messaging for both resource control (as a means to replace discrete signaling) and digital RF signal data sample streams, which may eliminate the need for analog RF cables. MORA also supports the transport of analog RF

signals on separate fiber optic or coaxial cables. A power bus completes the architecture by providing standard platform power to each device. A typical implementation might use a 28 volt direct current (VDC) power bus, as described in *MIL-STD-1275E, DoD INTERFACE STANDARD: Characteristics of 28 Volt DC Electrical Systems in Military Vehicles* [9]. The overall architecture containing capabilities from both VICTORY and MORA is illustrated in Figure 3 below.

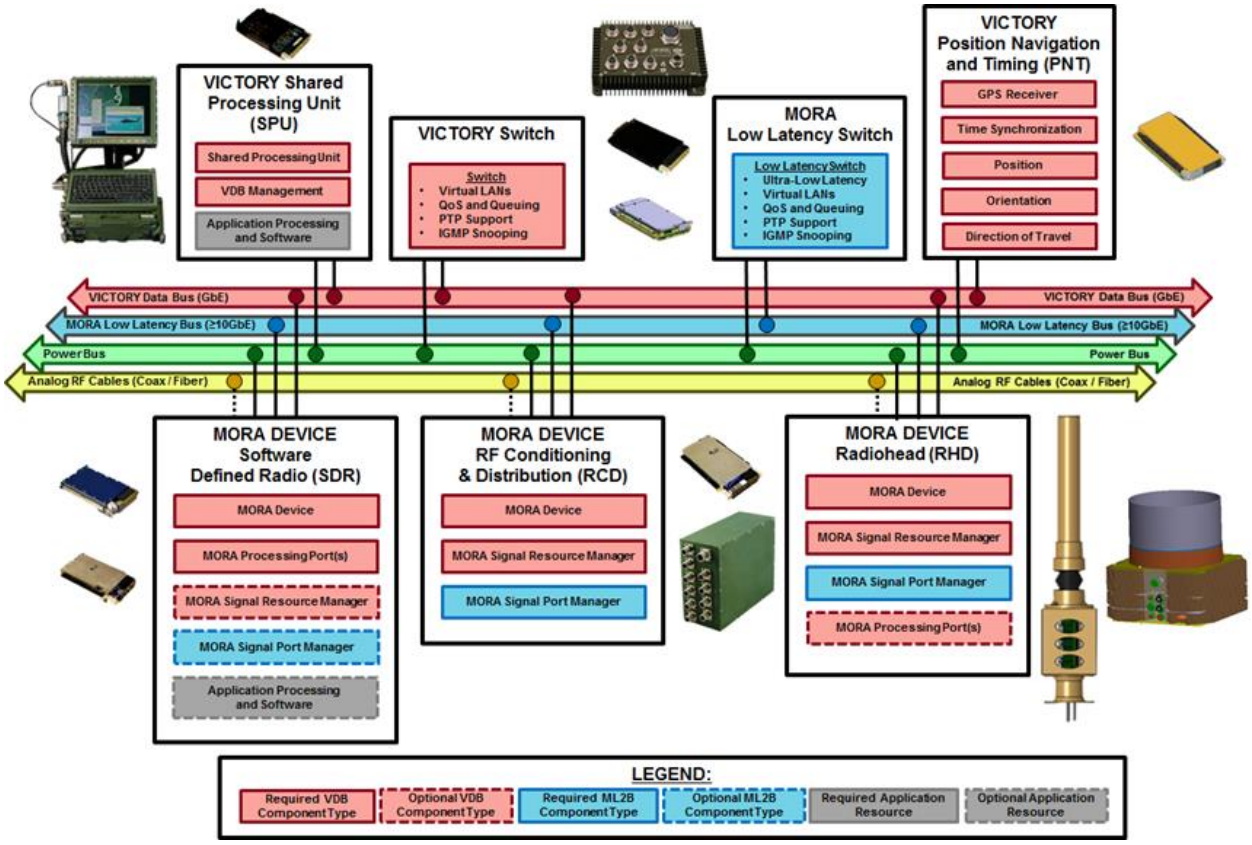

Figure 3 MORA Architecture

4.3 MORA Top-Down Perspective

MORA is logically designed to create efficiency, flexibility, reusability, and scalability in future Army RF systems. Current RF system implementations are typically single-mission focused with closed or proprietary interfaces between stove-piped resources. By defining open interfaces for the processing and signal resources, MORA will enable multi-mission capabilities that utilize and share resources within a single RF node in the tactical environment. Figure 4 below depicts the top-down perspective of a MORA system and the boundary of resource interfaces that the MORA specification encompasses.

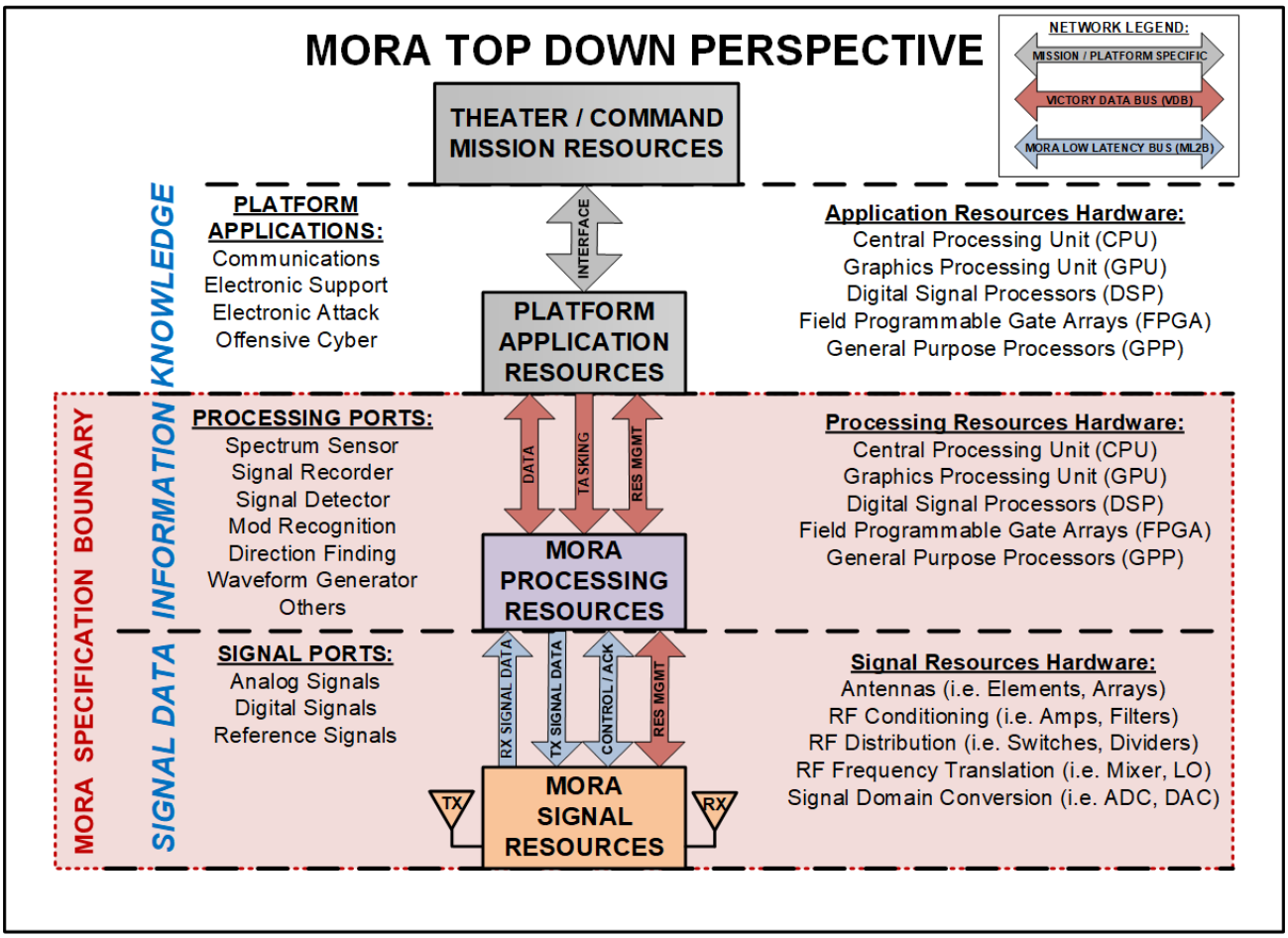

Figure 4 MORA Top-Down Perspective

The operation of RF missions typically consists of a combination of complex hardware, firmware, and software resources. These resources can require significant space and power and therefore can often be constrained in smaller platforms. It is essential that future systems be based on an architecture that fully promotes maximum efficiency and flexibility of resources. At the foundation of all RF missions, signal resources are required to capture, radiate, condition, distribute, translate, and/or convert RF signals. For RF chain receive operations, signal resources provide digital signal data to processing resources in order to develop information. Processing resources provide information to platform application resources in order to develop comprehensive knowledge of the electromagnetic environment within the RF range of the platform. In some RF missions, this platform knowledge can be subsequently provided to theater/mission command resources to further develop a broader comprehensive knowledge of the regional or global electromagnetic environment. For RF chain transmit operations, the interaction is the same, but in the reverse order and flow.

MORA seeks to standardize the interfaces for these signal resources and processing resources within the RF mission. In particular, the messaging interfaces required between the signal resources and processing resources must be defined so that signal resource capabilities can be understood, allocated, and controlled by processing resources such that signal chains can be constructed, ultimately transferring digital signal data between the signal and processing resources. In addition, the messaging interfaces required between processing resources and application resources must be defined so that processing resource capabilities can be understood, allocated, and controlled by application resources such that information chains can be constructed, ultimately transferring information between the processing and application resources.

The MORA specification was developed with a priority focus on establishing the architectural comprehensive definition of the messaging interfaces required between signal and processing resources. The specification also introduces the interfaces for processing resources at a high level. Further definition and refinement of the processing resource management and tasking interfaces for specific processing resource blocks is anticipated in future revisions over time.

4.3.1 MORA Signal Resource

A MORA Signal Resource is a resource within a MORA Device that captures, radiates, conditions, distributes, translates, and/or converts RF signals in support of receive and/or transmit operations in a MORA system. Examples of signal resource hardware include antennas, amplifiers, filters, switches, combiners, dividers, mixers, oscillators, analog to digital converters (ADCs) and digital to analog converters (DACs). Signal resource signal streams are transported between devices in analog or digital formats. Analog signals are routinely routed between devices via coaxial cables or could be transformed for transport on fiber cables. Digital signals are routinely transported between devices via network copper cables (e.g., Ethernet) or could be transported on network fiber cables in high volume/high data rate systems.

Standardized access and control of MORA Signal Resources is accomplished over the VDB and the ML2B. MORA Device and MORA Signal Resource Manager management interfaces provided over the VDB are used for general discovery, announcement of capabilities, resource reservation, and resource release. Once a resource is reserved, the real-time operation of signal resources then takes place over the ML2B utilizing MORA Data Messages (MDMs), based primarily on a specific implementation of VITA 49.2 Standard, which support the transport of digital packets of control, context, and signal data (time or frequency domain) over the ML2B.

4.3.2 MORA Processing Resource

A MORA Processing Resource is a resource within a MORA Device that processes signal data into information, processes information into signal data, or further processes information in support of receive and/or transmit operations in a MORA system. Examples of processing resource hardware include central processing units (CPUs), digital signal processors (DSPs), field programmable gate arrays (FPGAs), general purpose processors (GPPs), and graphics processing units (GPUs). Processing resource signal and information streams are transported between devices in digital formats. Digital signals are routinely transported between devices via network copper cables (e.g., Ethernet) or could be transported on network fiber cables in high volume/high data rate systems.

Standardized access and control of MORA Processing Resources is accomplished over the VDB. MORA Processing Resource management interfaces provided over the VDB are used for general discovery, capability announcement, configuration announcement, configuration control, and resource tasking. MORA Processing Resource data interfaces provided over the VDB are used for exchanging information with another processing resource or an application resource. MORA Signal Resource interfaces on the VDB and ML2B are used to establish an interface between processing resources and supporting signal resources.

4.3.3 MORA Transitional Implementation

Past investments in open architecture standards commonality and reuse within the DoD need to be supported by MORA. It is unrealistic to expect a new or emerging architecture to be immediately and/or fully implemented across existing systems, platforms, and projects. Instead, a new architecture should be implementable in varying degrees over time by providing a means to leverage past investments. MORA supports partial implementations for capability and technology insertions into existing systems by offering standardized access to new MORA Signal and Processing Resources from other specific resources already in place. Figure 5 below shows the concept of a MORA implementation with open access to existing specific processing and signal resources.

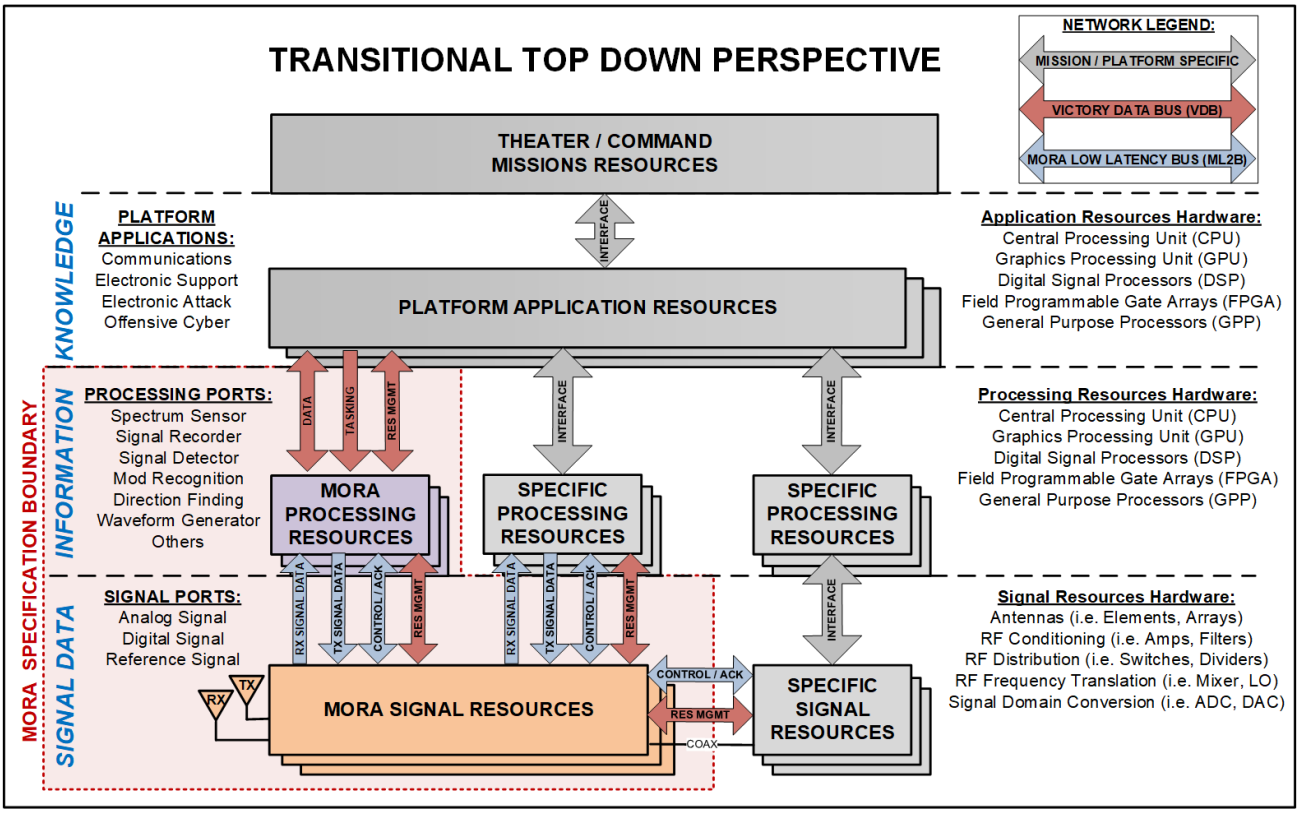

Figure 5 MORA Transitional RF System Top-Down Perspective

Army RF missions constantly face new challenges which require rapid insertion of new capabilities with the goal of minimal risk, schedule, and cost. MORA is a key enabler for achieving this goal. When new capability insertions require that new resources be integrated into an existing system, the system designer should strive to add MORA resources to expand the system's access to, and control of, these new resources while also promoting reuse into other MORA based systems.

As depicted in Figure 5 above, MORA Signal and Processing Resource insertions promote flexibility and efficiency to the signal, processing, and application resources. When MORA Signal Resources are added, they can be accessed by other pre-existing, specific signal resources and pre-existing, specific processing resources. These new MORA Signal Resources can also feed into new MORA Processing Resources which in turn provide new capabilities to pre-existing, specific application resources.

4.4 MORA Functional Perspective

In addition to the top-down perspective, the functional decomposition of RF missions is required in order to create standardized reusable specifications for access and control. Standardizing the interfaces for functional areas, as opposed to specific hardware, allows these functions to be managed in the same manner regardless of where they manifest in a given implementation. The RF signal paths for receive and transmit capabilities are inverted in nature and therefore they logically decompose into common functions. Figure 6 below depicts the MORA functional perspective for notional receive (top) and transmit (bottom) chains.

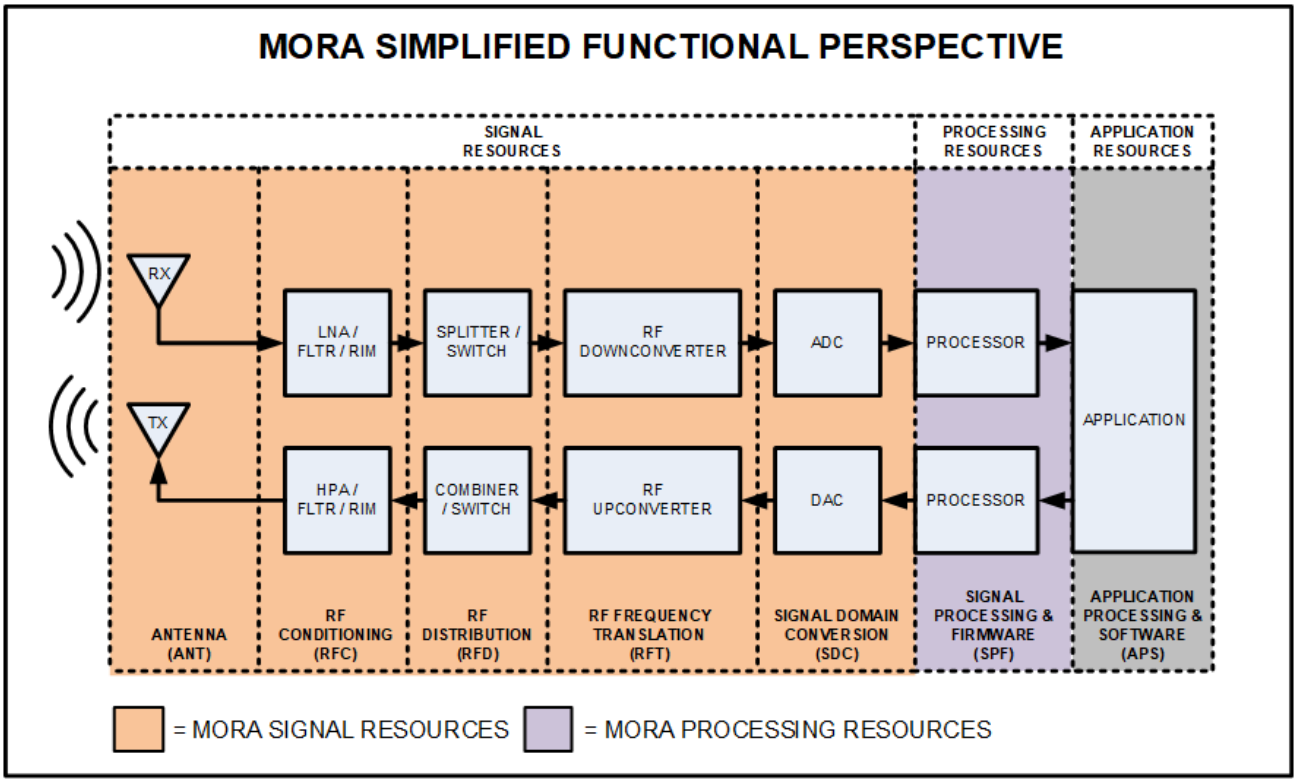

Figure 6 MORA Functional Perspective

The typical receive chain starts with the capture of radiated RF energy and conversion into conducted RF energy by an antenna. The signal will likely be conditioned (with a low noise amplifier and filter) and may be distributed (with a splitter or switch) before frequency translation (with a tuner or downconverter) and signal domain conversion (with an analog-to-digital converter). These functions can be distributed across multiple hardware boxes (called MORA Devices) that are connected via a series of signal ports. Signal domain conversion is the function which enables the transport of digital signal samples in the time and/or frequency domains to the processing resources.

These signal resource functions are combined with the processing resources to convert signal data into signal information. Processing resources convert the streaming signal data from signal resources into signal information (e.g., spectrum sensing, signal detection, signal characterization, and demodulation) in response to tasking from application resources. Multiple signal processing functions are typically operated in parallel and can be chained together via a series of processing resource blocks as well. Signal processing functions will most likely occur in hardware accelerators such as FPGAs, DSPs, and/or GPPs based on computational nature, latency, and throughput requirements.

The processed receive information streams are aggregated by application resources in order to develop knowledge. The type of knowledge depends on the specific mission and ranges from emitter detections and characterizations within an EW application to complex user data within a communication application. Resulting products are published over application ports in formats that can be displayed in a human machine interface (HMI), ingested by another application on the platform, or backhauled to the theater/command mission resources.

The functional perspective for the transmit chain operates in the reverse order of the receive chain, starting with application resources which initiate an action for transmit execution within processing resources (e.g. waveform response and waveform generation). This digitally generated signal is then converted into an analog signal (with a digital-to-analog converter), translated to the final frequency (with an upconverter), if required, distributed (with a combiner or switch), and conditioned (with a filter and/or high power amplifier) for transmission by the appropriate antenna(s).

The MORA Signal Resources are categorized into five types including: Antenna (ANT), RF Conditioning (RFC), RF Distribution (RFD), RF Frequency Translation (RFT), and Signal Domain Conversion (SDC).

4.4.1 Antenna (ANT) Signal Resource

An Antenna (ANT**)** signal resource is a resource within a MORA Device that captures or radiates electromagnetic energy in support of receive and/or transmit operations. Examples of an ANT signal resource is an antenna element or an array of multiple antenna elements. Attributes of an ANT resource would include such parameters as array type, array field of view, element type, frequency range, gain, polarization, beamwidth (azimuth & elevation), and physical location.

4.4.2 RF Conditioning (RFC) Signal Resource

An RF Conditioning (RFC) signal resource is a resource within a MORA Device that conditions conducted RF signals in support of receive and/or transmit operations. Examples of RFC signal resources include low noise amplifiers (LNAs), filters (e.g., low pass, high pass, band pass, and band reject), and high power amplifiers (HPAs). Attributes of an RFC resource would include such gain stage parameters as gain type (e.g., manual or automatic) and range, as well as filter parameters such as configuration (e.g., selectable or tunable), type (e.g., band pass, band reject), and frequency range.

4.4.3 RF Distribution (RFD) Signal Resource

An RF Distribution (RFD) signal resource is a resource within a MORA Device that distributes conducted RF signals in support of receive and/or transmit operations. Examples of RFD signal resources include power dividers, power combiners, and RF switches. Attributes of an RFC resource would include such switch parameters such as switch states and state connections.

4.4.4 RF Translation (RFT) Signal Resource

An RF Translation (RFT) signal resource is a resource within a MORA Device that frequency translates conducted RF signals in support of receive and/or transmit operations. Examples of RFT analog domain signal resources include mixers and local oscillators, RF tuners, frequency upconverters, and frequency downconverters. Examples of RFT digital domain signal resources include digital down converters (DDCs) and digital up converters (DUCs). Attributes of an RFT resource would include such analog parameters as radio frequency (RF)/intermediate frequency (IF) tuning ranges, bandwidths, resolution, and tuning speed, as well as digital parameters such as sub-tuning ranges and bandwidths.

4.4.5 Signal Domain Conversion (SDC) Signal Resource

A Signal Domain Conversion (SDC) signal resource is a resource within a MORA Device that converts the domain (analog vs. digital) of conducted RF signals in support of receive and/or transmit operations. Examples of SDC signal resources include analog to digital converters (ADCs) and digital to analog converters (DACs). Attributes of an SDC resource would include such parameters as sample format (i.e., real or complex IQ), sample size (number of bits), sample rate(s), and buffer size.

4.5 MORA Devices

A MORA Device is an entity within a MORA system which contains signal resources and/or processing resources in support of receive and/or transmit operations. MORA supports great flexibility in allowing the system designer to construct a system of devices that best accomplishes the RF mission needs within the platform constraints while maintaining standardized access and control of resources.

Based on one specific device's content of resources, it can be categorized into one of three MORA Device types. MORA Device types include: Radiohead (RHD), RF Conditioning & Distribution (RCD), and Software Defined Radio (SDR). The regulations regarding resource content function by MORA Device type are mapped in Figure 7 below.

MORA DEVICE TYPE RESOURCE FUNCTIONALITY

		RESOURCE CONTENT: (M = Mandatory O = Optional NA = Not Allowed)					
		SIGNAL RESOURCES					PROCESSING RESOURCES
DEVICE CLASS:	DEVICE TYPE:	ANT	RFC	RFD	RFT	SDC	SPF
MORA	Radiohead (RHD)	M	O	O	O	O	O
	RF Conditioning and Distribution (RCD)	NA	O	O	O	O	O
	Software Defined Radio (SDR)	NA	O	O	O	O	M

Figure 7 MORA Device Type Resource Functionality

In addition, each MORA Device type can further be categorized into one of four device subtypes depending on whether the specific device serves receive and/or transmit operations. MORA Device subtypes include: Receive Only (RXO), Transmit Only (TXO), Transmit or Receive (TOR), and Transmit and Receive (TAR).

4.5.1 MORA Radiohead (RHD) Device

Pursuant to Figure 7 above, a MORA Radiohead (RHD) Device contains ANT signal resources, may contain RFC, RFD, RFT, and/or SDC signal resources, and may contain processing resources in support of receive and/or transmit operations. RHDs can vary greatly in functionality and form factor depending upon the operating frequency range and RF missions they support.

4.5.2 MORA RF Conditioning and Distribution (RCD) Device

Pursuant to Figure 7 above, a MORA RF Conditioning and Distribution (RCD) Device may contain RFC, RFD, RFT, and/or SDC signal resources and may contain processing resources in support of receive and/or transmit operations. RCDs are typically connected between RHD and SDR devices. RCD devices vary in functionality and form factor depending upon the complexity and RF missions they support.

4.5.3 MORA Software Defined Radio (SDR) Device

Pursuant to Figure 7 above, a MORA Software Defined Radio (SDR) Device contains processing resources, and may contain RFC, RFD, RFT, and/or SDC signal resources in support of receive and/or transmit operations. SDRs can vary in functionality and form factor depending upon the complexity and RF missions they support.

4.6 MORA Resource Management

MORA establishes a convention for users to be granted control of specific resources when needed and then release control when tasking is completed. Depending on the scope of the system operation and mission needs, this convention may be used statically or dynamically. MORA further establishes the means to allow for the system designer to assign certain users a higher priority for a specific resource, thereby creating a two dimensional (time and priority) dynamic user/resource environment. By dynamically utilizing resources across multiple users, the system can achieve better utilization efficiencies and better manage situations where operations are degraded.

4.6.1 Resource Management Objectives

MORA promotes a structured atomic relationship between a resource and user to achieve the best possible resource use efficiency in both the signal and processing resources. The hierarchical structure supports effective coordination between adjacent resources and seeks to reduce discovery profiling burdens. Comprehensive atomic RF performance attributes are made available to support dynamic RF chain construction during degraded system conditions or under special needs. The

architecture also promotes reduced network burdening through data and information multicasting from both signal and processing resources respectively. MORA's resource implementation flexibility further reduces network burdens by allowing processing to reside in devices up or down the RF chain according to the actual mission needs and platform constraints.

4.6.2 Resource Management Methodology

MORA's resource management methodology is founded on basic atomic resource allocations governed by time of request and user priority assignment. Only one user can reserve a signal resource at any time. That user may include other authorized controllers in the reservation request. Data, context, and information streams are made available to any interested users through multicasting. Reserved signal resources can be commandeered upon a request from a higher priority user. User priority assignments are also atomic in nature to allow the best efficiency and flexibility to the system designer. This supports both simple static implementations as well as complex, dynamic topologies with advanced resource management allocation experts.

Resources within a MORA system are sequentially discovered by users at system start-up in a bottom-up fashion (from signal resources, to processing resources, to application resources). Conversely, MORA users sequentially utilize specific resources in a top-down fashion (from application resources, to processing resources, to signal resources). This is further described in "Resource Capabilities and Tasking", which includes a sequence diagram that illustrates a sequence of capability discovery as well as resource utilization which occurs over time between the application, processing, and signal resources.

4.6.3 Signal Resource Partitioning

MORA Signal Resources are partitioned into atomic blocks called MORA Signal Ports. A MORA Signal Port is a logical partition of signal resources with an external access point on a MORA Device in support of receive and/or transmit operations in an RF system. A MORA Signal Port consists of analog (radio frequency, intermediate frequency, or baseband) or digital (real or complex IQ in time or frequency domains) signals transported between devices in coaxial, copper wire, or fiber optic interconnect cables. MORA Signal Port classes include the Analog Signal, Digital Signal, and Reference Signal classes. The different classes of signal ports and their respective types of signal ports are described in the following sections.

4.6.3.1 Analog Signal Port Class

The analog signal port class pertains to a MORA Signal Port operating within the receive and/or transmit chain containing an analog representation, in the time domain, of radio frequency, intermediate frequency, or baseband signals transported between MORA Devices on coaxial or fiber optic interconnect cables. The Analog Signal Port Class includes the following signal port types: Analog Receive (ARX), Analog Transmit (ATX), and Analog Transmit and/or Receive (ATR).

4.6.3.1.1 Analog Receive (ARX) Signal Port

The analog receive (ARX) signal port is a unidirectional signal port operating within the system's receive chain containing an analog representation, in the time domain, of radio frequency, intermediate frequency, or baseband signals transported between MORA Devices on coaxial or fiber optic interconnect cables. ARX signal port subtypes include: RF Single-Channel (RSC), IF Single-Channel (ISC), and Baseband Single-Channel (BSC).

4.6.3.1.2 Analog Transmit (ATX) Signal Port

The analog transmit (ATX) signal port is a unidirectional signal port operating within the system's transmit chain containing an analog representation, in the time domain, of radio frequency, intermediate frequency, or baseband signals transported between MORA Devices on coaxial or fiber optic interconnect cables. ATX signal port subtypes include: RF Single-Channel (RSC), IF Single-Channel (ISC), and Baseband Single-Channel (BSC).

4.6.3.1.3 Analog Transmit and/or Receive (ATR) Signal Port

The analog transmit and/or receive (ATR) signal port is a bi-directional, half or full duplex signal port operating within the system's receive and/or transmit chain containing an analog representation, in the time domain, of radio frequency, intermediate frequency, or baseband signals transported between MORA Devices on coaxial or fiber optic interconnect cables. ATR signal port subtypes include: RF Single-Channel (RSC), IF Single-Channel (ISC), and Baseband Single-Channel (BSC).

4.6.3.2 Digital Signal Port Class

The digital signal port class pertains to a MORA Signal Port operating within the receive and/or transmit chain containing a digital representation of radio frequency, intermediate frequency, or baseband signals transported between devices on coaxial or fiber optic interconnect cables. The Digital Signal Port Class includes the following signal port types: Digital Receive (DRX), Digital Transmit (DTX), and Digital Transmit or Receive (DTR).

4.6.3.2.1 Digital Receive (DRX) Signal Port

The digital receive (DRX) signal port is a unidirectional signal port operating within the system's receive chain containing a digital representation, in the time or frequency domain, of radio frequency, intermediate frequency, or baseband signals transported between devices on coaxial or fiber optic interconnect cables. DRX signal port subtypes include: RF Single-Channel (RSC), RF Multi-Channel (RMC), IF Single-Channel (ISC), IF Multi-Channel (IMC), Baseband Single-Channel (BSC), and Baseband Multi-Channel (BMC).

4.6.3.2.2 Digital Transmit (DTX) Signal Port

The digital transmit (DTX) signal port is a unidirectional signal port operating within the system's transmit chain containing a digital representation, in the time or frequency domain, of radio frequency, intermediate frequency, or baseband signals transported between devices on coaxial or fiber optic interconnect cables. DTX signal port subtypes include: RF Single-Channel (RSC), RF Multi-Channel (RMC), IF Single-Channel (ISC), IF Multi-Channel (IMC), Baseband Single-Channel (BSC), and Baseband Multi-Channel (BMC).

4.6.3.2.3 Digital Transmit and/or Receive (DTR) Signal Port

The digital transmit and/or receive (DTR) signal port is a bi-directional, half or full duplex signal port operating within the system's receive and/or transmit chain containing a digital representation, in the time or frequency domain, of radio frequency, intermediate frequency, or baseband signals transported between devices on coaxial or fiber optic interconnect cables. DTR signal port subtypes include: RF Single-Channel (RSC), RF Multi-Channel (RMC), IF Single-Channel (ISC), IF Multi-Channel (IMC), Baseband Single-Channel (BSC), and Baseband Multi-Channel (BMC).

4.6.3.3 Reference Signal Port Class

The reference signal port class pertains to a MORA Signal Port that supports the MORA system containing an analog or digital representation of reference signals transported between devices on coaxial or fiber optic interconnect cables. The Reference Signal Port Class includes the following signal port types: Analog Reference Input (ARI), Analog Reference Output (ARO), Digital Reference Input (DRI), and Digital Reference Output (DRO).

4.6.3.3.1 Analog Reference Input (ARI) Signal Port

The analog reference input (ARI) signal port is a unidirectional signal port that accepts an analog representation, in the time domain, of a reference signal transported between devices on coaxial or copper interconnect cables. ARI signal port

subtypes include: Sinusoidal Oscillator (OSC), Reference Clock (CLK), RF Sample (RFS), IF Sample (IFS), and Baseband Sample (BBS).

4.6.3.3.2 Analog Reference Output (ARO) Signal Port

The analog reference output (ARO) signal port is a unidirectional signal port that generates an analog representation, in the time domain, of a reference signal transported between devices on coaxial or copper interconnect cables. ARO signal port subtypes include: Sinusoidal Oscillator (OSC), Reference Clock (CLK), RF Sample (RFS), IF Sample (IFS), and Baseband Sample (BBS).

4.6.3.3.3 Digital Reference Input (DRI) Signal Port

The Digital Reference Input (DRI) signal port is a unidirectional signal port that accepts a digital representation, in the time or frequency domain, of a reference signal transported between devices on fiber or copper interconnect cables. DRI signal port subtypes include: RF Sample (RFS), IF Sample (IFS), and Baseband Sample (BBS).

4.6.3.3.4 Digital Reference Output (DRO) Signal Port

The Digital Reference Output (DRO) signal port is a unidirectional signal port that generates a digital representation, in the time or frequency domain, of a reference signal transported between devices on fiber or copper interconnect cables. DRO signal port subtypes include: RF Sample (RFS), IF Sample (IFS), and Baseband Sample (BBS).

4.6.4 Processing Resource Partitioning

MORA Processing Resources process signal data into information, process information into signal data, or further process information in support of receive and/or transmit operations in a MORA system. Figure 8 below depicts the three configurations of MORA Processing Resource blocks.

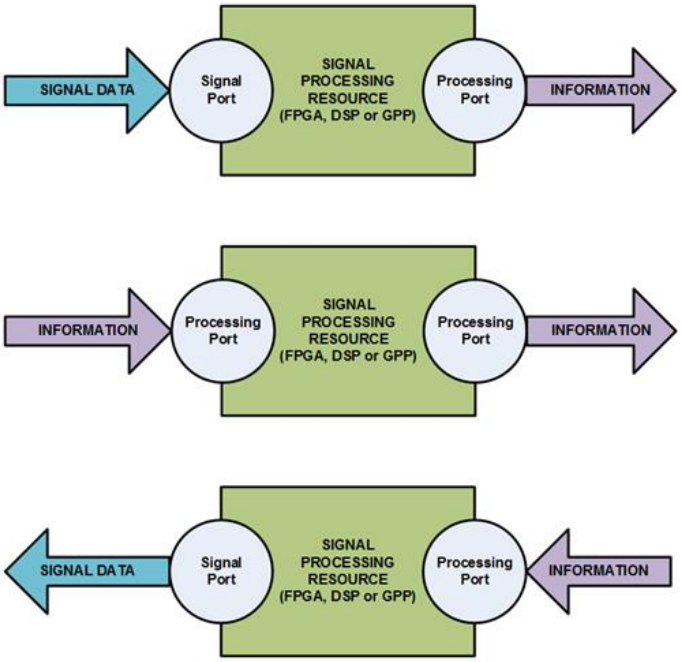

Figure 8 MORA Processing Resource Blocks

MORA Processing Resources are partitioned into atomic blocks called MORA Processing Ports. A MORA Processing Port is a logical partition of processing resources with an external access point on a MORA Device in support of receive

and/or transmit operations in an RF system. Processing ports include management and data interfaces on the VDB and may also interface with signal resources through signal ports on the ML2B. The information consists of digital formats transported between devices in copper wire or fiber optic interconnect cables. Two examples of MORA Processing Resource blocks are described below.

4.6.4.1 MORA Direction Finding Engine (DFE) Processing Resource

A DFE processing resource produces line of bearing (LOB) information for signals of interest, derived from multi-channel IQ data from a DRX signal port, as depicted in the Figure 9 below. This processing resource implementation contains one signal port and one processing port (top case in Figure 8 above) which externally connects to the MORA system via multiple interfaces on two different networks. The DFE processing resource is tasked by clients through its management interface on VDB. This management interface includes task specific settings such as the desired mode (set-on DF or scan DF), LOB type (2D or 3D), timing, duration, number of repetitions, repetition interval, frequency, bandwidth, and threshold. LOB information is sent to the client through its data interface on the VDB. This data interface includes task specific responses that include azimuth bearing and confidence, elevation bearing and confidence (for 3D types), received signal strength, and position (starting point of the LOB vector). Signal data is received from a MORA Signal Resource through the MDM interface on the ML2B.

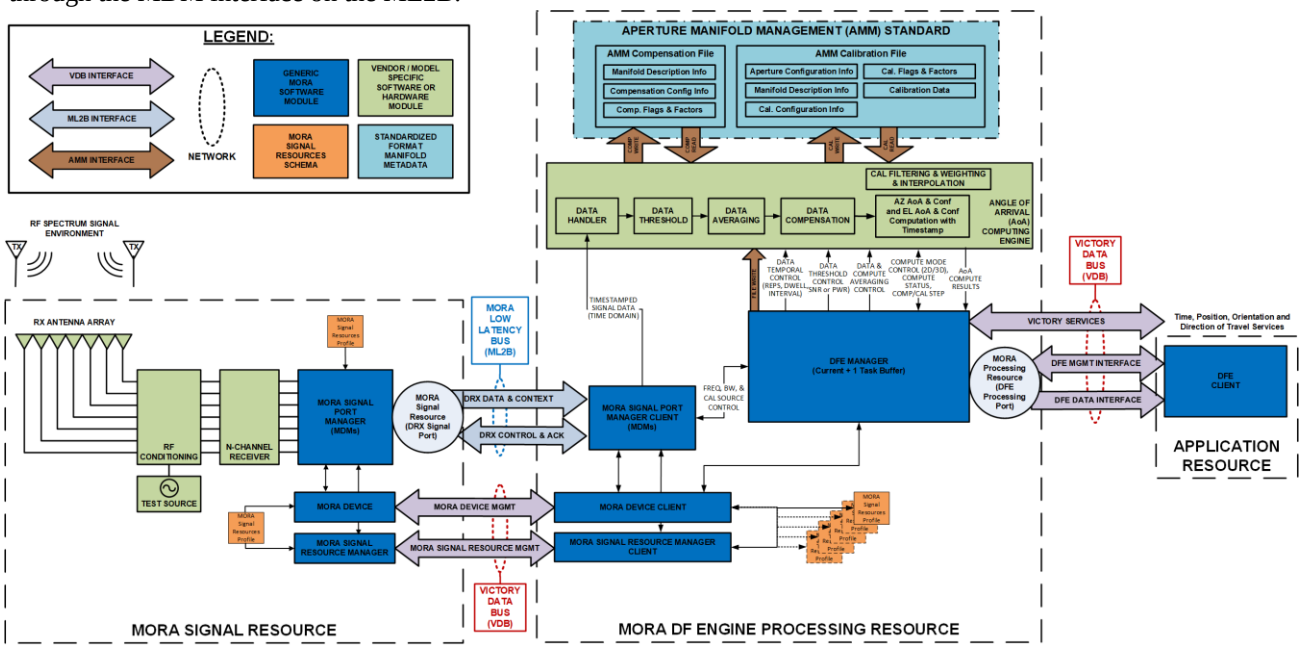

Figure 9 MORA Direction Finding Engine Processing Port

Figure 9 above provides a basic functional overview of the MORA DF Engine (DFE) processing resource. These interfaces are depicted by the blue (ML2B network) and purple (VDB network) block arrows. Generic software modules, depicted in dark blue, provide the standardized interface functionality and promote reuse to reduce interface implementation cost, schedule, and risk to MORA implementers. The green portions of the block diagram are vendor/model specific and provide capabilities that are unique to a particular device model, implementation, or capability. This includes cases where the vendor has developed proprietary hardware and/or software that is safely wrapped within standardized interfaces for data, control, and resource management functionality. Additionally, the light blue box and brown block arrows represent standardized interfaces and data models for the manifold metadata. This standard, named Aperture Manifold Management (AMM), helps to promote computational resource compatibility and reuse with different antenna resources and different platforms.

4.6.4.2 MORA RF Spectrum Sensor Processing Resource

An RF Spectrum Sensor (RSS) processing resource outputs RF spectral information (power versus frequency by bin), derived (typically by FFT) from IQ data from a DRX signal port. The RSS processing port uses context information about the digital IQ stream to determine antenna reference, frequency, bandwidth, format, and sampling rate details of the input raw signal data. The RSS messages may also include additional information including number of samples used to compute average power, peak power versus frequency (by bin), and minimum power versus frequency (by bin).

4.6.5 Resource Capabilities and Tasking

MORA Devices are initially discovered on the VDB pursuant to the established VICTORY methods. Capabilities of both signal resources and processing resources are learned over VDB by potential users. Signal Resource capabilities are learned through a series of request / response messages, starting with device level information, followed with signal port specific detailed information. This minimizes the unnecessary exchange of capability information on signal ports that the potential user is not interested in. Processing Resource capabilities are learned through two request / response messages known as the capability and configuration messages.

Signal resources are reserved over VDB for subsequent tasking over ML2B. Once a user wishes to be allocated a signal resource port, they request to reserve the specific signal port over VDB. The signal port of interest is reserved for control by a user (or users), but any user can subscribe to the multi-casted signal data and context. If the signal port is not reserved, the user will be granted control regardless of the user's assigned priority. If the signal port is reserved by an equal or higher priority user, the request to reserve will be denied. If the signal port is reserved by a lesser priority user, the request to reserve will be granted and the existing user will be released with notice. After a reservation is established, tasking and outputs occurs over the ML2B via MDM Type 1 messages. Once the user has completed tasking for the signal port resource, the user releases the port over VDB.

Processing resources are not constrained to be reserved by only a single user but instead can receive configuration and start task messages on VDB from multiple users. Tasking received over VDB is executed based on the time of receipt and priority of the start task messages. Tasking can be for a single execution or repeated executions with optionally specified start times, dwell times, and intervals. The output from the processing resource tasking is sent via multicast on VDB, providing information to the task's originating user as well as any other interested users.

Figure 10 below illustrates this resource management process, consistent with the architecture methodology of discovering capabilities from the bottom-up, while the tasking functions occur from the top-down. Processing resources, as potential signal resource users, learn the current signal resource capabilities before announcing their capabilities since the available signal resources have a dramatic impact on the realm of what is possible for the processing resource to accomplish (e.g., frequency range of operations). Once the connected signal resource's capabilities are understood in detail by the processing resource, the processing resource can then report their own processing resource capabilities to prospective application users. The tasking functions start with application resources tasking processing resources, who then in turn reserve, task, and release signal resources. For simplification, the figure below does not include all possible signal resource capability request / response messages or any intra-device messaging.

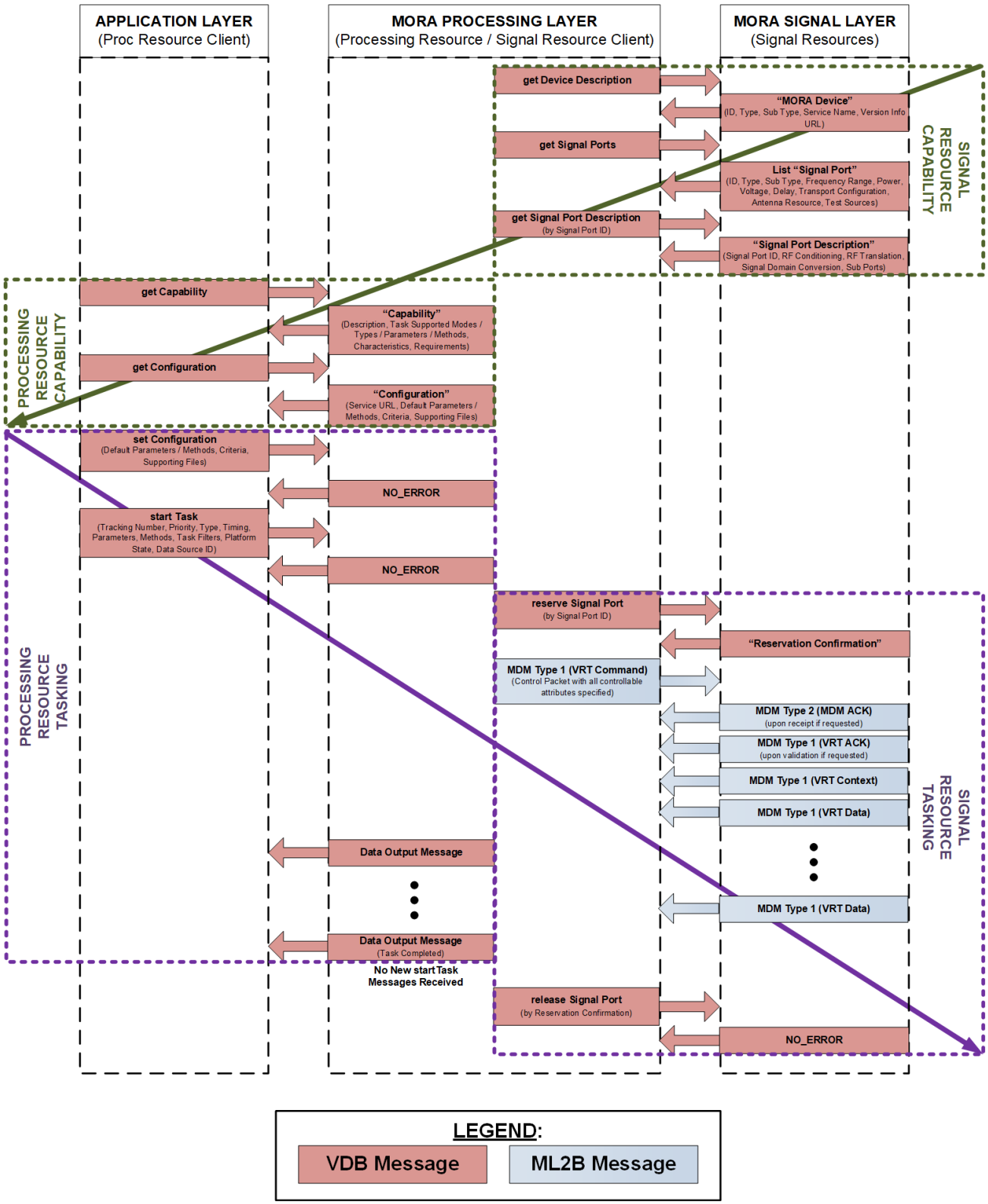

Figure 10 MORA Resource Management Process

4.7 MORA Basic System Composition

MORA can be extremely useful in implementing modular, flexible RF systems for performing multiple missions with very high resource efficiency. In basic terms, a MORA system consists of an integration of multiple MORA Devices utilizing a two network (bus) topology (i.e., VDB and ML2B). These two networks enable MORA systems to build upon VICTORY accomplishments while also enabling new, unique MORA features such as low latency message control signaling to replace discrete signaling.

Figure 11 below depicts a basic MORA system that integrates a MORA RHD Device, a MORA RCD Device, and a MORA SDR Device. These devices are all connected through both the VDB and ML2B networks. In addition, applications are also connected to the system through the VDB. MORA Device level capability, status, health, and command messaging is supported over the VDB. MORA Processing Resource capability, configuration, and tasking messages are supported over the VDB. MORA Signal Resource capabilities, reservation, and release messages are also supported over the VDB, but MORA Signal Resource real-time command messages, context messages, and signal data streams are supported over the ML2B. In addition to these two network connections in the system shown in the figure below, the MORA Devices are also connected via coax cables.

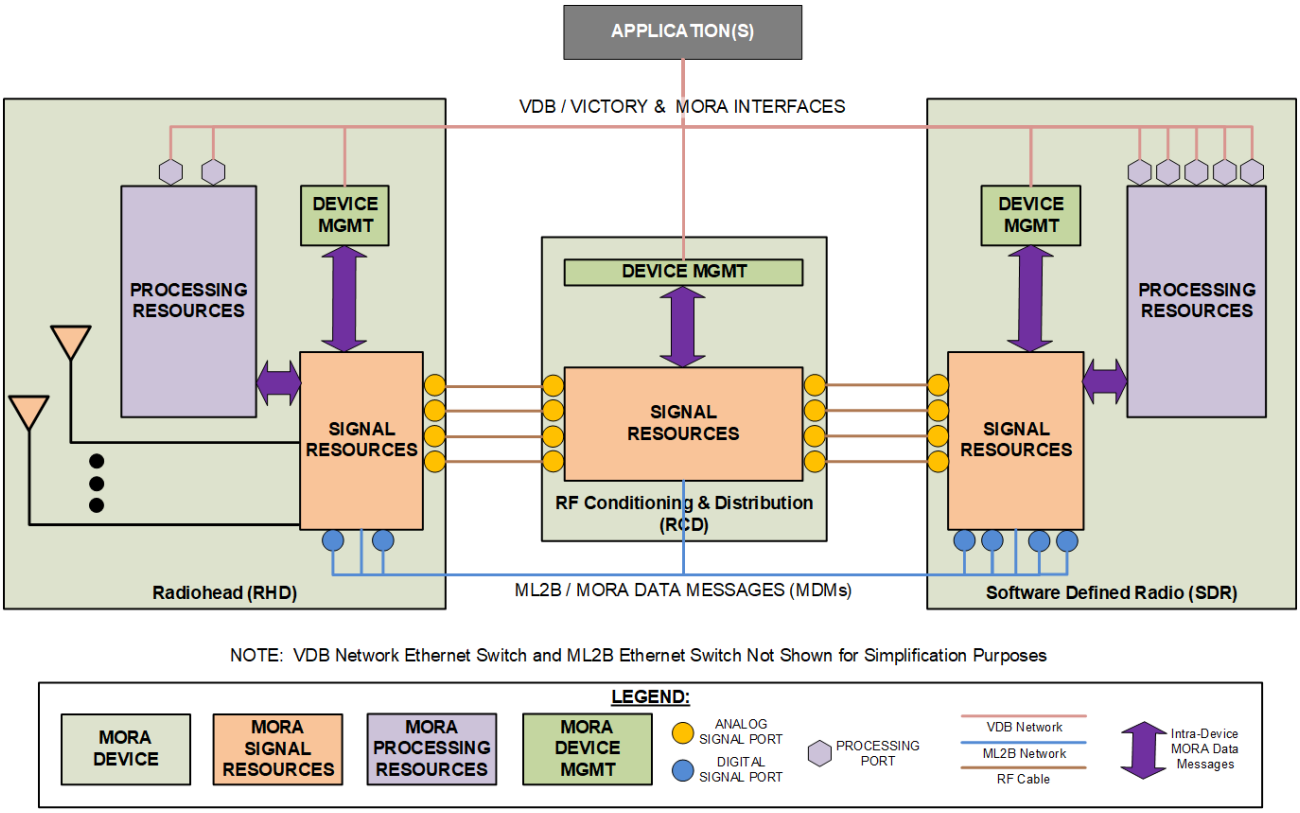

Figure 11 MORA Basic System Composition

The RHD Device in the diagram above contains both processing resources (two ports) and signal resources (four analog signal ports and two digital signal ports). The RCD Device contains only signal resources (eight analog signal ports). The SDR Device contains both processing resources (five ports) and signal resources (four analog signal ports and four digital signal ports).

The MORA system example shown above allows for processing resource implementations within RHD and SDR Devices. This enables the system to locate processing functions in the optimal device location for a specific platform implementation in order to balance network burdens with resource efficiency. The location of specific signal resources in the receive and/or transmit chain is also flexible in that the system designer can optimize analog signal flows for reduced cabling complexity and count. By allowing the system designer freedom as to where signal domain conversion (ADC/DAC) takes place, an optimum digital vs. analog signal transport topology that is best suited for the RF mission(s) can be constructed. Standardizing the interfaces for functional areas, as opposed to hardware boxes, allows these functions to be managed in the same manner regardless of where they physically manifest in a given implementation.

5 SPECIFICATIONS

5.1 VICTORY Specifications

The following sub-sections are recommended extensions to VICTORY and VICTORY components for MORA.

5.1.1 VICTORY Data Bus

MORA leverages the VDB for auto-discovery, health publishing, and management of MORA component types. VDB traffic is recommended to be marked according to Table 4 on MORA platforms in order to enforce QoS for shared data services. Switches are recommended to be configured to store associated packets in a dedicated priority queue which is serviced before all other queues.

Table 4 Recommended VDB Traffic Marking

Interface	DSCP		IEEE P802.1p	
	Value	Service Class	Value	Service Class
VICTORY Position Data, VICTORY Orientation Data, VICTORY Direction of Travel Data	32	Inelastic/Real-Time, Short Message	3	Critical Applications
All other VDB Traffic	16	Preferred Elastic, OA&M	2	Excellent Effort

5.1.2 VICTORY Component Types

MORA recommends leveraging various VICTORY component types to provide infrastructure (e.g., switch), shared data services (e.g., time synchronization, position, orientation, and direction of travel services), and access control (e.g., authentication, policy decision, policy enforcement, policy store, and attribute store services). A description of these component types and their specifications can be found in VICTORY Architecture and VICTORY Standard Specifications, respectively.

Table 5 contains component types from the VICTORY Standard Specifications that are recommended on MORA platforms to satisfy performance requirements.

Table 5 Minimum Recommended VICTORY Component Types

Component Type	Spec Tag
Time Synchronization Service	VT50000-V1.7
Position Service	VT50100-V1.9
GPS Receiver	VT61000-V1.9
Orientation Service	VT50200-V1.9
Direction of Travel Service	VT50300-V1.9
Switch	VT50900-V1.9
Authentication Service	VT50401-V1.9
Policy Enforcement Service	VT50600-V1.9
Policy Decision Service	VT50500-V1.9
Policy Store Service	VT50700-V1.9
Attribute Store Service	VT50800-V1.9

5.2 MORA Low Latency Bus

The ML2B extends VICTORY by introducing an addressable bus for real-time communication. The ML2B provides deterministic message delivery with ultra-low latency (i.e., less than 10 microseconds). Latency is defined as the overall time to send/receive a message and includes transmission, propagation, and switch delays. The ML2B replaces current point-to-point discrete signals (e.g., transistor-transistor logic) between MORA components. Specific uses of the ML2B include transmit/receive switching, blanking, and tuning messages. Use of an addressable bus, vice point-to-point signals, improves the scalability of MORA and enables component distribution throughout the platform. The ML2B can also be used for digital RF, including real-time control and delivery of high volume, high rate signal data.

The ML2B typically uses 10 Gigabit Ethernet (10GbE) or greater due to its ubiquity in commercial products. Since "when" a device can send a message is as important as "how long" it takes for the message to be delivered, deterministic protocols that use a scheduling approach are not appropriate as they limit the maximum message rate. MORA achieves near-deterministic message delivery by using a "fat pipe" to send very small control messages that receive priority in the network based on QoS policies. Current discrete signals typically convey binary data (i.e., 0 or 1) that could also be conveyed utilizing control messages over the ML2B that would fit within a minimum size Ethernet frame (i.e., 64 bytes). Signal data messages over the ML2B might use larger packets such as jumbo frames (e.g., 9000 bytes) to improve protocol efficiency. The combination of high throughput and QoS mechanisms reduces the probability that buffering delays will occur. This is further reduced by the fact that most commercial switches are able to switch at line rate, which limits the potential for network contention to traffic to/from the same device.

5.2.1 MORA Low Latency Bus Specifications

5.2.1.1 Multicast Dissemination Over the Network Specification <48006-20160131, Exp>

The ML2B shall support Internet Group Management Protocol (IGMP), as specified *in Internet Engineering Task Force (IETF) Request for Comment (RFC) 2236: Internet Group Management* [6], either through the use of a compatible router or the use of a switch with IGMP snooping referenced in *Internet Engineering Task Force (IETF) Request for Comment (RFC) 4541: Considerations for Internet Group Management Protocol (IGMP) and Multicast Listener Delivery (MLD) Snooping Switches* [7].

5.2.1.2 Jumbo Frame Packet Support Specification <48007-20200707, Exp>

Jumbo Ethernet Frames with maximum transmission unit of 9000 bytes shall be supported.

5.2.1.3 Standard for Ethernet Specification <48001-20160131, Exp>

The frame structure, field definitions, and Media Access Control (MAC) conventions specified in IEEE 802.3-2008 [10] shall be supported.

5.2.1.4 Virtual LANs Specification <48002-20160131, Exp>

The Virtual Local Area Networks (VLANs) and Priority Code Point (PCP) classes of service as specified in IEEE 802.1Q shall be supported.

5.2.1.5 Standard for Internet Protocol and User Datagram Protocol Specification <48005-20160131, Exp>

IPV4 as specified in *Internet Engineering Task Force (IETF) Request for Comment (RFC) 791: Internet Protocol* [5], as well as UDP, as specified in *Internet Engineering Task Force (IETF) Request for Comment (RFC) 768: User Datagram Protocol* [4] shall be supported.

5.2.1.6 MDM Traffic Marking Specification <48008-20200707, Exp>

RF Signal data is timestamped to document the time of collection or transmission. Timestamps can also be used in a transmit chain to schedule when a transmit event occurs to provide fully deterministic behavior. An acknowledgement-based approach is employed to ensure reliable delivery of critical control messages. The combination of control/context and signal data streams (information streams) on the same physical media can degrade performance of the RF capability if QoS is not enforced. MDM traffic shall be marked according to Table 6 in order to maintain ultra-low latency for real-time messages. Switches shall be configured to store associated packets in a dedicated priority queue which is serviced before all other queues.

Table 6 MDM Traffic Marking

MDM Packet Type	DSCP		IEEE P802.1p	
	Value	Service Class	Value	Service Class
MDM Type 1 VRT Command Packets and all other MDM Types	32	Inelastic/Real-Time, Short Message	3	Critical Applications
MDM Type 1 VRT Signal Data and VRT Context Packets	9	Preferred Elastic, High Throughput Data	2	Excellent Effort
All other Traffic	0	Elastic, Best Effort	0	Best Effort

5.3 MORA Component Types

The following section contains the specifications for the MORA components types. Figure 12 below illustrates the implementation of the component types within a MORA Device for signal resources and depicts the interactions between component types as well as to the system through the VDB and ML2B networks. The figure also illustrates the component types used in infrastructure devices to support system networks.

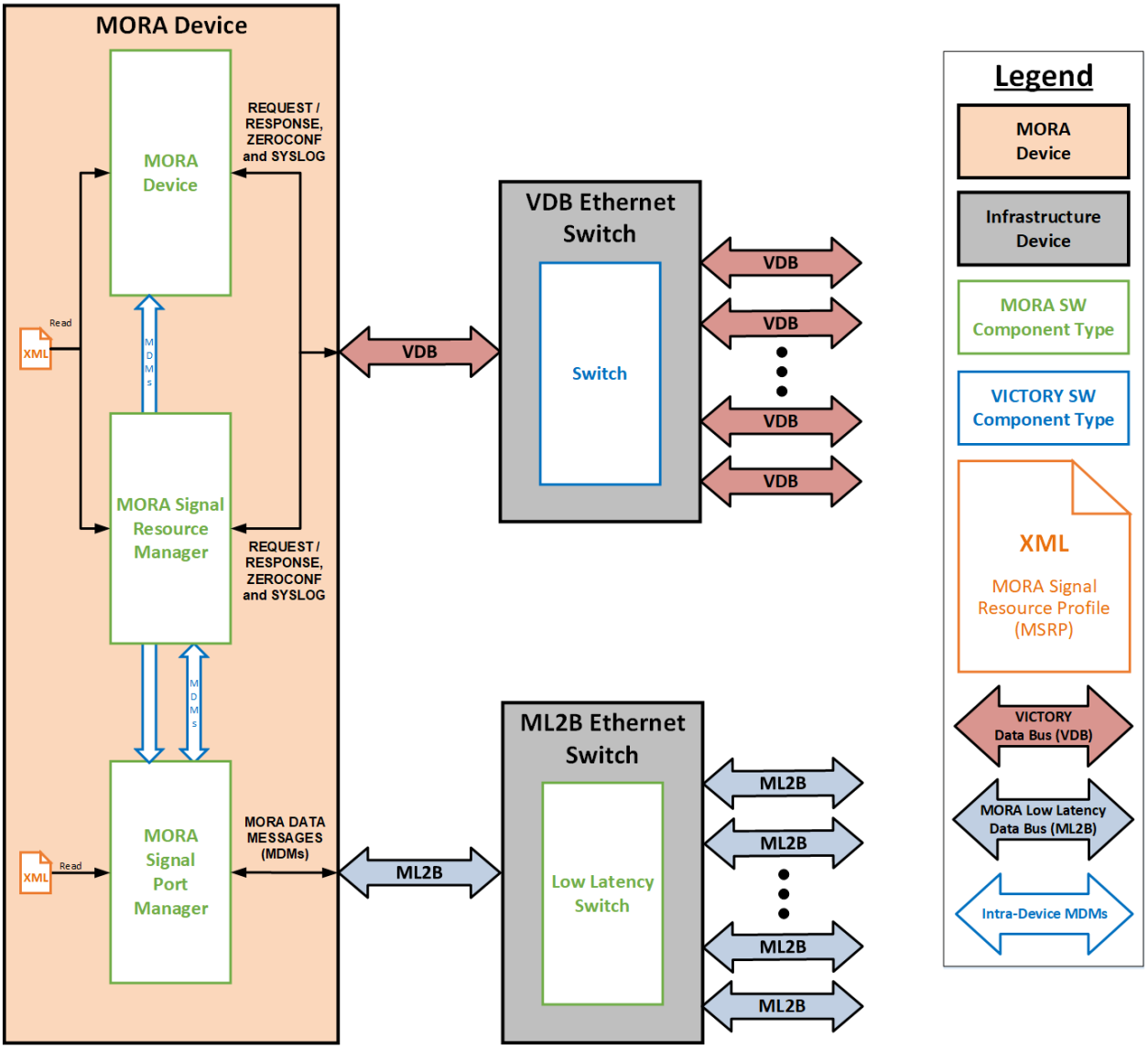

Figure 12 Implementation of Component Types within a MORA Device for Signal Resources

The MORA Device and MORA Signal Resource Manager component types interact with the system using request/response, zero configuration and SYSLOG interactions that transit the VDB network. The MORA Signal Port Manager component type interacts with the system using MORA Data Message (MDM) interactions that transit the ML2B network. The MORA Device and MORA Signal Resource Manager component types also interact with the MORA Signal Port Manager component type using intra-device MORA Data Message (MDM) interactions.

Message interactions for the MORA Device, MORA Signal Resource Manager and MORA Signal Port Manager component types in a specific implementation are individualized through the use of the MORA Signal Resource Profile (MSRP) file. This profile describes the device's specific RF functionality and resource partitioning (signal ports and sub ports) that informs the device's constituent component types. Additional low-level details are provided for each resource partition such as key static and controllable RF attributes and RF performance across the resource's operating frequency range. The profile includes a standardized means to describe RF performance parameters of noise figure, gain, second and third order intercept points, 1dB compression point, as well as internally generated and signal related spurious content. The MSRP also informs the specific value to be conveyed for ML2B network transport configurations and device coaxial connections to other devices once integrated into a specific system.

In certain limited use cases involving simplistic non-sensitive RF functionality in a MORA Device, the MORA messaging architecture also supports an alternative implementation to allow designers flexibility to achieve maximum efficiency. This alternative implementation is shown in Figure 13 below. MORA Device #1 is a simplistic, non-sensitive capability and in this alternative case, only contains the MORA Signal Port Manager component type and accesses the system only via the ML2B network.

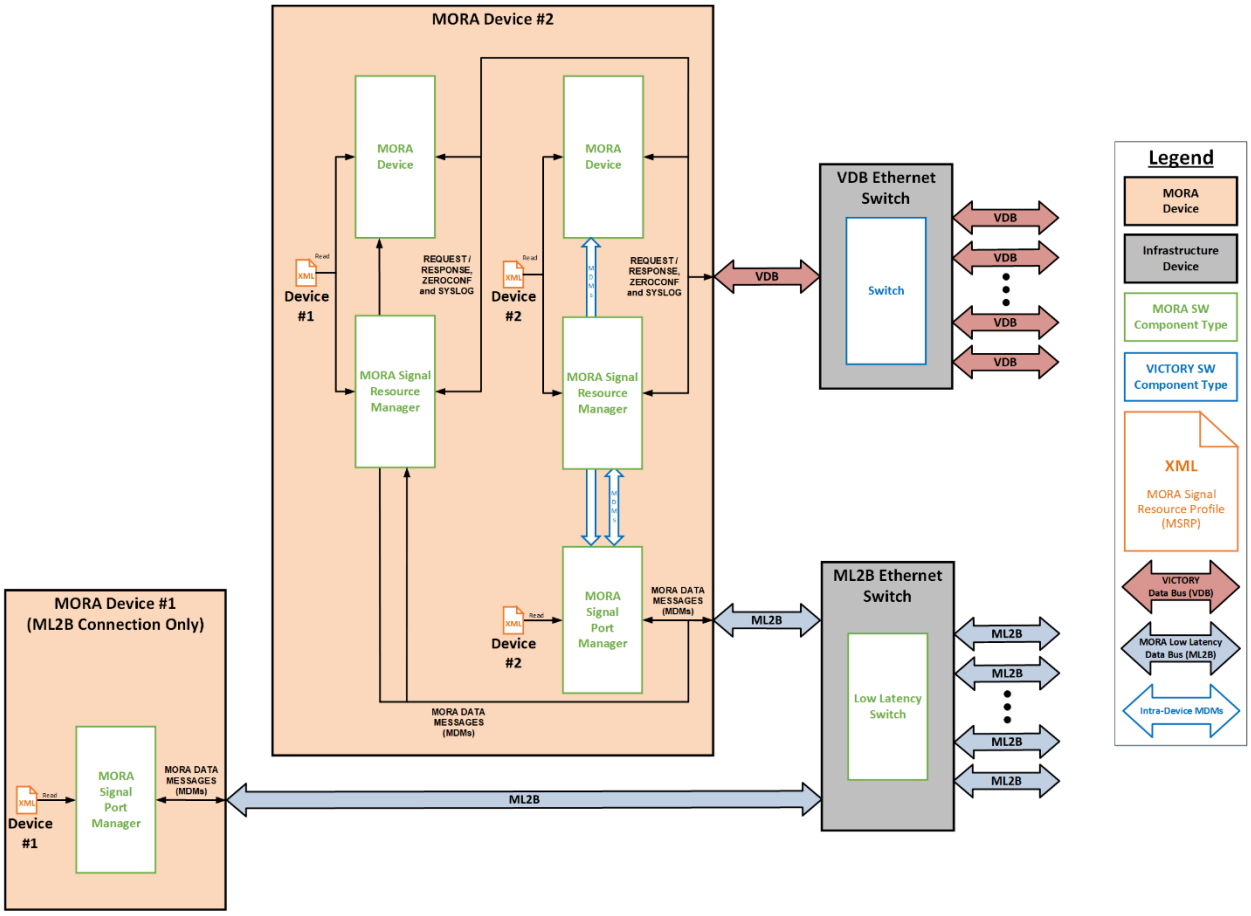

Figure 13 Alternate Proxy Implementation of Signal Resources

Representation of MORA Device #1's MORA Device and MORA Signal Resource Manager component types is accomplished through a proxy implementation in MORA Device #2. Device #2 is a standard implementation of MORA Signal Resources that also accommodates the proxy of the MORA Device and MORA Signal Resource Manager component types. In this case, Device #1's proxied MORA Device and MORA Signal Resource Manager component types interact with Device #1's MORA Signal Port Manager component type using MORA Data Message (MDM) interactions that transit the ML2B network instead of being sent intra-device. It is also important to note that separate Device #1 and Device #2 MSRPs are maintained on Device #2.

5.3.1 Low Latency Switch <MT91010-V2.4>

The Low Latency Switch interfaces implementation shall be in accordance with Table 7 below.

Table 7 Low Latency Switch <MT91010-V2.4>

Spec Title	Spec Tag	Applicability
Low Latency Switch Data Interface	MT91011-V2.4	Required
Switch Management Interface	VT50902-V1.7	Required
SNMP-Based Health Publishing Interface	VT59903-V1.6	Required
MORA Low Latency Bus Performance Specification	48201-20160131, Exp	Required

5.3.1.1 Low Latency Switch Data Interface <MT91011-V2.4>

The Low Latency Switch Data Interface implementation shall be in accordance with Table 8 below.

Table 8 Low Latency Switch Data Interface <MT91011-V2.4>

Spec Title	Spec Tag	Applicability
Low Latency Switch Data Interface Physical and Data-Link Layer Specifications	MT91012-V2.4	Required
Switch Data Interface Network Layer and Higher Specifications	VT50901.T4-V1.7	Required

5.3.1.2 Low Latency Switch Data Interface Physical and Data-Link Layer Specifications <MT91012-V2.4>

The Low Latency Switch Data Interface Physical and Data-Link Layer Specifications implementation shall be in accordance with Table 9 below.

Table 9 Low Latency Switch Data Interface Physical and Data-Link Layer Specifications <MT91012-V2.4>

Spec Title	Spec Tag	Applicability
Low Latency Copper Data Physical and Data-Link Layer Specifications	MT91013-V2.4	(1) Required: MT91013 or MT91014
Low Latency Fiber Data Physical and Data-Link Layer Specifications	MT91014-V2.1	
Frame Structure	01013-20121113, Pro	Required
Media Access Control	01014-20121113, Pro	Required
Logical Link Control	01015-20120725, Pro	Required
Link Layer Switching	01016-20120725, Pro	Required
Link Layer Flow Control	01017-20121113, Pro	Required
Virtual Local Area Network (VLAN)	01077-20120131, Exp	Required
Multicast Dissemination Over the Network Specification	48006-20160131, Exp	Required
Jumbo Frame Packet Support Specification	48007-20200707, Exp	Required
MDM Traffic Marking Specification	48008-20200707, Exp	Required

(1) One or more of MT91013, MT91014 is Required

5.3.1.3 Low Latency Copper Data Physical and Data-Link Layer Specifications <MT91013-V2.4>

The Low Latency Copper Data Physical and Data-Link Layer Specifications implementation shall be in accordance with Table 10 below.

Table 10 Low Latency Copper Data Physical and Data-Link Layer Specifications <MT91013-V2.4>

Spec Title	Spec Tag	Applicability
1000BASE-T	01006-20121113, Pro	(1) Required: At least one of 01006, 48115, 01009, 48103, 48111, 48112, or 48114
1000BASE-KX	48115-20200707, Exp	
10GBASE-X/10GBASE-T	01009-20121113, Pro	
10GBASE-KX4	48103-20140530, Exp	
10GBASE-KR	48111-20170531, Exp	
40GBASE-KR4	48112-20170531, Exp	
100GBASE-KR4	48114-20200707, Exp	
Copper Auto-Negotiation	01011-20121113, Pro	Optional

(1) One or more of 01006, 48115, 01009, 48103, 48111, 48112, 48114 is Required

5.3.1.3.1 10GBASE-KX4 <48103-20140530, Exp>

Backplane connections using 10GBASE-KX4 shall comply with IEEE 802.3 [10] clause 71.

5.3.1.3.2 10GBASE-KR <48111-20170531, Exp>

Backplane connections using 10GBASE-KR shall comply with IEEE 802.3 [10] clause 72.

5.3.1.3.3 40GBASE-KR4 <48112-20170531, Exp>

Backplane connections using 40GBASE-KR4 shall comply with IEEE 802.3 [10] clause 84.

5.3.1.3.4 100GBASE-KR4 <48114-20200707, Exp>

Backplane connections using 100GBASE-KR4 shall comply with IEEE 802.3 [10] clause 93.

5.3.1.3.5 1000BASE-KX <48115-20200707, Exp>

Backplane connections using 1000BASE-KX shall comply with IEEE 802.3 [10] clause 70.

5.3.1.4 Low Latency Fiber Data Physical and Data-Link Layer Specifications <MT91014-V2.1>

The Low Latency Fiber Data Physical and Data-Link Layer Specifications implementation shall be in accordance with Table 11 below.

Table 11 Low Latency Fiber Data Physical and Data-Link Layer Specifications <MT91014-V2.1>

Spec Title	Spec Tag	Applicability
10GBASE-SR	48102-20140530, Exp	(1) Required: 48102 or 48113
40GBASE-SR4	48113-20140530, Exp	

(1) One or more of 48102, 48113 is Required

5.3.1.4.1 10GBASE-SR <48102-20140530, Exp>

Fiber media connections using 10GBASE-SR shall comply with IEEE 802.3 [10] clause 52.

5.3.1.4.2 40GBASE-SR4 <48113-20140530, Exp>

Fiber media connections using 40GBASE-SR4 shall comply with IEEE 802.3 [10] clause 86.

5.3.1.5 MORA Low Latency Bus Performance Specification <48201-20160131, Exp>

The ML2B shall support an end-to-end application latency less than 10 microseconds. This latency includes delays due to the physical layer, MAC layer, transmission, propagation, and switching.

5.3.2 MORA Device <MT92010-V2.4>

The MORA Device component type provides device-level interfaces for a MORA Device. These include discovery and capability announcement, basic file input and output, configuration management, waveform management, status, and health. This component type also contains an operations interface for interacting with the MORA Signal Port Manager component type.

Any MORA Device shall implement the MORA Device component type in accordance with Table 12 below.

Table 12 MORA Device <MT92010-V2.4>

Spec Title	Spec Tag	Applicability
MORA Device Management Interface	MT92011-V2.4	Required
MORA Device Operations Interface	MT90016-V2.4	Required
Generic End Node Data Interface	VT52101-V1.9	Required
Syslog-Based Health Publishing Interface	VT50103-V1.9	Required
Syslog Protocol Data Parameters for MORA	49101-20200707, Pro	Required
Auto-Discovery Interface	VT59930-V1.6	Recommended

5.3.2.1 MORA Device Management Interface <MT92011-V2.4>

The MORA Device Management Interface provides methods to manage the MORA Device. These methods include retrieving device description, device status, device configuration, built-in test results, and device files. The interface also provides the methods for setting device configuration and execution mode as well as sending device files.

The MORA Device Management Interface implementation shall be in accordance with Table 13 below.

Table 13 MORA Device Management Interface <MT92011-V2.4>

Spec Title	Spec Tag	Applicability
Common Management Interface Specifications	VT59902-V1.9	Required
MORA Schemas and WSDLs	49103-20201002, Pro	Required
Device Information Management Parameters	10009-V1_9DATE, Pro	Required
Generic End Node Management Parameters	13003-V1_9DATE, Pro	Required
MORA Device Management Parameters	49011-20210301, Pro	Required
Waveform Management Parameters	49012-20201002, Pro	Optional
Data Confidentiality & Integrity for Management Interfaces	10018-20180215, Pro	Optional
Data Authentication for Management Interfaces	10019-20150331, Pro	Optional
Authentication and Authorization Security Specifications	VT50400-V1.9	Optional

5.3.2.1.1 MORA Device Management Parameters <49011-20210301, Pro>

A textual representation of the MORA Device Management Parameters implementation shall be in accordance with the following section. The Appendix titled "APPENDIX B: MORA WSDLS" provides additional details for the Web Services Definition Language (WSDL) that describes MORA Device Management Parameters.

The following operations prescribe specific conditions which describe request message errors that shall result in a return of a specific error type and specific error text attachment. All error types are additionally described in the "Management Interface Error Types" section of the VICTORY Standard Specifications and shall apply to the following management parameter operations. Validation shall occur in the following order: for XML/Schema validity, for device instance validity and then device functional compatibility (if applicable). For example, Configuration ID would first validate that it is an integer greater than 0, and then validate against the device profile (the Configuration ID exists on that specific device).

The terms "restricted string" and "restricted URI" are described in VICTORY sections titled "String Bounds" and "URI Bounds" under "VICTORY Data Types". String enumerations further restrict the String Bounds to the predefined list of values.

1. **Device Description**
    a. This parameter describes the MORA Device.
    b. Operations
        i. Get Device Description
            1. Arguments for "Get Device Description" shall be empty
            2. Return value shall be a "MORA Device" complex type as described in "MORA Common Complex Types".
2. **Device Status**
    a. This parameter describes the status of a MORA Device.
    b. Operations
        i. Get Device Status
            1. Arguments for "Get Device Status" shall be empty.
            2. Return Value shall be a "Device Status" complex type as described in "MORA Common Complex Types".
3. **File**
    a. This parameter describes the file operations of a MORA Device and allows for the sending, receiving, and deleting of files specific to the mission of a MORA Device.
    b. Operations

i. Get File List
   1. Arguments for "Get File List" shall be empty or a "Type" corresponding to a "MORA File".
   2. The Return Value for "Get File List" shall be a list of "MORA File" complex types as described in "MORA Common Complex Types". If the arguments are empty, the entire list of MORA Files associated with a MORA Device shall be returned. If the argument is a "Type", the return value is a subset of the MORA Files on the MORA Device associated with that "Type". If there are no files associated with the file type parameter, or there are no files on the device, then an empty list shall be returned. The optional field, "Content", in the "MORA File" complex type shall not be populated in the return value when executing this operation.
   3. Error conditions for "Get File List" are handled as follows. If the "Type" argument is supplied and is out of bounds, then an error of "OUT_OF_RANGE" may be returned.

ii. Pull File
   1. Arguments for "Pull File" shall be a "File Name" that is corresponding to a "MORA File" currently on the MORA Device.
   2. The Return Value for "Pull File" shall be a "MORA File" complex type as described in "MORA Common Complex Types". The optional field, "Content", in the "MORA File" complex type shall be populated in the return value when executing this operation.
   3. Error conditions for "Pull File" are handled as follows. If the "File Name" argument does not correspond to a "MORA File" on the MORA Device, then an error of "GENERIC_FAULT" with error text of "File not found" shall be returned. If the "File Name" is out of bounds, then an error of "OUT_OF_RANGE" may be returned.

iii. Push File
   1. Arguments for "Push File" shall be a "MORA File" complex type as described in "MORA Common Complex Types". The optional field, "Content", in the "MORA File" complex type shall be populated in the argument when executing this operation. The optional fields of "Path" and "Date Modified", in the "MORA File" complex type shall not be included when executing this operation. If "Path" and/or "Date Modified" are included and well formed, they shall be ignored.
   2. The return value shall be an error of "NO_ERROR".
   3. Error conditions for "Push File" are handled as follows. If the "File Name" of the "MORA File" already exists, then an error of "GENERIC_FAULT" with error text of "File Name already exists" shall be returned. If the "MORA File" argument does not contain a "Content" field or the "Content" field is empty, then an error of "GENERIC_FAULT" with error text of "File contains no content" shall be returned. If the "MORA File" cannot be written to the file system due to lack of available space, then an error of "GENERIC_FAULT" with error text of "Insufficient space to write file" shall be returned. If the "MORA File" cannot be written to the file system for any other reason, then an error of "GENERIC_FAULT", with an error text describing the problem, shall be returned. If any of the fields in the provided "MORA File" are outside of their respective bounds, then an error of "OUT_OF_RANGE" may be returned.

iv. Delete File
   1. Arguments for "Delete File" shall be a "File Name" that corresponds to the "MORA File" the user wishes to delete.
   2. The return value shall be an error of "NO_ERROR".
   3. Error conditions for "Delete File" are handled as follows. If the "File Name" argument does not correspond to a "MORA File" on the MORA Device, then an error of "GENERIC_FAULT" with error text of "File not found" shall be returned. If the "File Name" is out of bounds, then an error of "OUT_OF_RANGE" may be returned.

4. **Current MORA Configuration**
    a. This parameter describes the current MORA configuration for a MORA Device.
    b. Operations
        i. Get Available MORA Configurations
            1. Arguments for "Get Available MORA Configurations" shall be empty.
            2. Return value for "Get Available MORA Configurations" shall be a list of "MORA Configuration" complex types as described in "MORA Common Complex Types". The list of available MORA configurations shall contain at least one item.
        ii. Get Current MORA Configuration
            1. Arguments for "Get Current MORA Configuration" shall be empty.
            2. Return value shall be an "ID" that corresponds to the current "MORA Configuration" complex type as described in "MORA Common Complex Types".
        iii. Set Current MORA Configuration
            1. Arguments for "Set Current MORA Configuration" shall be an "ID" that corresponds to a "MORA Configuration" the user wishes to set as the current MORA Configuration.
            2. Return value shall be an error of "NO_ERROR".
            3. Error conditions for "Set Current MORA Configuration" are handled as follows. If the "ID" argument does not correspond to a "MORA Configuration" on the device, then an error of "GENERIC_FAULT" with error text of "Configuration not found" shall be returned. If the set current MORA configuration action resulted in a Signal Port Manager error response to the MDM Type 6 message, then an error of "GENERIC_FAULT" with error text of "SPM error" shall be returned. If the "ID" of the MORA Configuration is out of bounds, then an error of "OUT_OF_RANGE" may be returned.
            4. *NOTE: A "Set Current MORA Configuration" operation can have an impact on any number of device and/or signal resource operations, depending on the specific implementation, including the functions of waveform operation and signal port reservations.*
5. **Built-In Test Results**
    a. This parameter describes and controls built-in test results.
    b. Operations
        i. Run Built-In Test
            1. Arguments for "Run Built-In Test" shall be empty.
            2. Return value for "Run Built-In Test" shall be an error of "NO_ERROR".
            3. Error conditions for "Run Built-In Test" are handled as follows. If the built-in test cannot be executed, then an error of "GENERIC_FAULT" with error text of "BIT not available" shall be returned. If the device does not support built-in testing, then an error of "NOT_SUPPORTED" shall be returned.
        ii. Get Built-In Test Results
            1. Arguments for "Get Built-In Test Results" shall be empty.
            2. Return value for "Get Built-In Test Results" shall be a list of "Built-In Test Result" complex types as described in "MORA Common Complex Types". The list of built-in test results shall contain at least one item.
            3. Error conditions for "Get Built-In Test Results" are handled as follows. If the built-in test is currently running, then an error of "GENERIC_FAULT", with an error text of "Test in progress", shall be returned. If there are no current built-in test results, then an error of "GENERIC_FAULT", with error text of "No test results available", shall be returned. If the device does not support built-in testing, then an error of "NOT_SUPPORTED" shall be returned.

6. **Command**

a. This parameter describes a command to be sent to the MORA Device.
b. Operations
    i. Send Command
        1. Arguments for "Send Command" shall be a restricted string chosen from the following:
            a. OPERATE
            b. STANDBY
                i. Application is halted
            c. TRANSMIT_INHIBIT
                i. Application is active but not transmitting
            d. POWER_ON
            e. SHUT_DOWN
            f. RESTART
            g. MAINTENANCE_MODE
            h. ZEROIZE
            i. SANITIZE
        2. Return value shall be an error of "NO_ERROR".
        3. Error conditions for "Send Command" are handled as follows. If the "Command" cannot be executed for any reason, then an error of "GENERIC_FAULT", with an error text describing the problem, shall be returned. If the command action resulted in a Signal Port Manager error response to the MDM Type 6 message, then an error of "GENERIC_FAULT" with error text of "SPM error" shall be returned. If the device does not support the "Send Command" argument specified, then an error of "NOT_SUPPORTED" shall be returned. If the "Send Command" argument specified is out of bounds, then an error of "OUT_OF_RANGE" may be returned.
        4. The Send Command (RESTART), Send Command (STANDBY), and Send Command (ZEROIZE) operations shall be respectively equivalent to "Restart Generic End Node", "Standby Generic End Node" and "Purge Generic End Node" operations as described in the "Generic End Node Management Parameters" section of the VICTORY Standard Specifications.
        5. *NOTE: Repeating a command is not considered an error; for example, calling command "OPERATE" twice should not return an error*.

5.3.2.1.2 Waveform Management Parameters <49012-20201002, Pro>

A textual representation of the Waveform Management Parameters implementation shall be in accordance with the following section. The Appendix titled "APPENDIX B: MORA WSDLS" provides additional details for the Web Services Definition Language (WSDL) that describes Waveform Management Parameters.

The following operations prescribe specific conditions which describe request message errors that shall result in a return of a specific error type and specific error text attachment. All error types are additionally described in the "Management Interface Error Types" section of the VICTORY Standard Specifications and shall apply to the following management parameter operations. Validation shall occur in the following order: for XML/Schema validity, for device instance validity and then device functional compatibility (if applicable). For example, Waveform Operation ID would first validate that it is an integer greater than 0, then validate against the device profile (the Waveform Operation ID exists on that specific device), and then validate compatibility with the current MORA Configuration (the Waveform Operation ID is supported by the configuration of that specific device).

The terms "restricted string" and "restricted URI" are described in VICTORY sections titled "String Bounds" and "URI Bounds" under "VICTORY Data Types". String enumerations further restrict the String Bounds to the predefined list of values.

1. **Waveforms**
    a. This parameter describes the available waveforms for execution on the MORA Device. A waveform is analogous to a wireless protocol or modulation.
    b. Operations
        i. Get Available Waveforms
            1. Arguments for "Get Available Waveforms" shall be empty.
            2. The return value shall be a list of "Waveform" complex types as described in "Waveform Complex Types". If there are no available waveforms, then an empty list shall be returned.
2. **Waveform Operations**
    a. This parameter describes the available and current waveform operations and selects the waveform operation for execution on the MORA Device.
    b. Operations
        i. Get Available Waveform Operations
            1. Arguments for "Get Available Waveform Operations" shall be empty.
            2. The return value shall be a list of "Waveform Operation" complex types as described in "Waveform Complex Types". If there are no available waveform operations, then an empty list shall be returned.
        ii. Get Current Waveform Operation
            1. Arguments for "Get Current Waveform Operation" shall be empty.
            2. The return value shall be an "ID" corresponding to a "Waveform Operation" complex type as described in "Waveform Complex Types".
            3. Error conditions for "Get Current Waveform Operation" are as follows. If no waveform operation is currently specified on the device, then an error of "GENERIC_FAULT" with error text of "No current waveform operation is specified" shall be returned.
            4. *NOTE: Implementations may set a default value for Current Waveform Operation on power up.*
            5. *NOTE: A "Set Current MORA Configuration" operation can have an impact on any number of device and/or signal resource operations, depending on the specific implementation, including waveform operation.*
        iii. Set Current Waveform Operation
            1. Arguments for "Set Current Waveform Operation" shall be an "ID" corresponding to a "Waveform Operation" complex type as described in "Waveform Complex Types".
            2. The return value shall be an error of "NO_ERROR".
            3. Error conditions for "Set Current Waveform Operation" are as follows. If the "ID" is not valid for the device, then an error of "GENERIC_FAULT" with error text of "Invalid waveform operation" shall be returned. If the "ID" is valid for the device, but not compatible with the current MORA Configuration, then an error of "GENERIC_FAULT" with error text of "Incompatible waveform operation" shall be returned. If the set current waveform operation action resulted in a Signal Port Manager error response to the MDM Type 6 message, then an error of "GENERIC_FAULT" with error text of "SPM error" shall be returned. If the waveform operation cannot be set because of a hardware or internal fault, then an error of "GENERIC_FAULT", with an error text field describing the problem, shall be returned. If the "ID" of the Waveform Operation is out of bounds, then an error of "OUT_OF_RANGE" may be returned.
            4. *NOTE: A "Set Current MORA Configuration" operation may have an impact on any number of device operations, depending on the specific implementation, including the Current Waveform Operation.*

5.3.2.2 MORA Device Operations Interface <MT90016-V2.4>

The MORA Device Operations Interface provides methods to interact with the MORA Signal Port Manager component type. These methods include signal resource execution mode, time of day announcement, and health updates. The interface also supports acknowledgement messaging.

The MORA Device Operations Interface implementation shall be in accordance with Table 14 below.

Table 14 MORA Device Operations Interface <MT90016-V2.4>

Spec Title	Spec Tag	Applicability
MDM Protocol Specifications	MT96001-V2.4	Required
MDM Command Message (Type 6) Specification	48615-20200707, Exp	Required
MDM Acknowledgement Message (Type 2) Specification	48611-20180928, Exp	Required
MDM Networking Specifications	MT96002-V2.4	Optional*
MDM Time of Day Message (Type 3) Specification	48612-20170531, Exp	Optional
MDM Health Message (Type 5) Specification	48614-20200707, Exp	Optional

* Required for MDMs transiting a network

5.3.3 MORA Signal Resource Manager <MT92013-V2.4>

The MORA Signal Resource Manager component type provides interfaces to retrieve and reserve RF capabilities. The component type provides interfaces for describing RF functions and capabilities of signal resources including antennas, RF conditioning, RF distribution, RF frequency translation, and signal domain conversion types. It also provides an interface to reserve signal ports and discover the endpoints for real-time control, context, and data provided over the ML2B. The MORA Signal Resource Manager component type also enables information exchange on antenna arrays, connections, manifolds, and RF performance. This component type also contains an operations interface for interacting with the MORA Signal Port Manager component type.

Any MORA Device that contains signal resources shall implement the MORA Signal Resource Manager component type in accordance with Table 15 below.

Table 15 MORA Signal Resource Manager <MT92013-V2.4>

Spec Title	Spec Tag	Applicability
MORA Signal Resource Management Interface	MT92014-V2.4	Required
MORA Signal Resource Manager Operations Interface	MT90017-V2.4	Required
Syslog-Based Health Publishing Interface	VT50103-V1.9	Required
Syslog Protocol Data Parameters for MORA	49101-20200707, Pro	Required
Auto-Discovery Interface	VT59930-V1.6	Recommended

5.3.3.1 MORA Signal Resource Management Interface <MT92014-V2.4>

The MORA Signal Resource Management Interface provides methods to understand and reserve partitioned signal resource capabilities formally defined as Signal Ports. This interface includes methods to discover signal port capabilities

for signal resources including antennas, RF conditioning, RF frequency translation, and signal domain conversion types. The interface also provides for information exchange on antenna arrays, connections, manifolds, and RF performance.

The MORA Signal Resource Management Interface implementation shall be in accordance with Table 16 below.

Table 16 MORA Signal Resource Management Interface <MT92014-V2.4>

Spec Title	Spec Tag	Applicability
Common Management Interface Specifications	VT59902-V1.9	Required
MORA Schemas and WSDLs	49103-20201002, Pro	Required
MORA Signal Resource Management Parameters	49014-20201002, Pro	Required
Radio Frequency Distribution Management Parameters	49005-20201002, Pro	Optional
Data Confidentiality & Integrity for Management Interfaces	10018-20180215, Pro	Optional
Data Authentication for Management Interfaces	10019-20150331, Pro	Optional
Authentication and Authorization Security Specifications	VT50400-V1.9	Optional

5.3.3.1.1 MORA Signal Resource Management Parameters <49014-20201002, Pro>

A textual representation of the MORA Signal Resource Management Parameters implementation shall be in accordance with the following section. The Appendix titled "APPENDIX B: MORA WSDLS" provides additional details for the Web Services Definition Language (WSDL) that describes MORA Signal Resource Management Parameters.

The following operations prescribe specific conditions which describe request message errors that shall result in a return of a specific error type and specific error text attachment. All error types are additionally described in the "Management Interface Error Types" section of the VICTORY Standard Specifications and shall apply to the following management parameter operations. Validation shall occur in the following order: for XML/Schema validity, for device instance validity and then device functional compatibility (if applicable). For example, Signal Port ID would first validate that it is an integer within bounds (1-127), then validate against the device profile (the Signal Port ID exists on that specific device), and then validate compatibility with the current MORA Configuration (the Signal Port ID is supported by the configuration of that specific device).

The terms "restricted string" and "restricted URI" are described in VICTORY sections titled "String Bounds" and "URI Bounds" under "VICTORY Data Types". String enumerations further restrict the String Bounds to the predefined list of values.

1. **Signal Port**
    a. This parameter describes and manages the access to signal ports present on the MORA Device.
    b. Operations
        i. Get Signal Ports
            1. Arguments for "Get Signal Ports" shall be empty.
            2. Return value for "Get Signal Ports" shall be a list of "Signal Port" complex types as described in "MORA Common Complex Types". The list of signal ports shall contain at least one item.
        ii. Reserve Signal Port
            1. Arguments for "Reserve Signal Port" shall be an "ID" that corresponds to the "Signal Port" the user wishes to reserve. In addition, a list of "MORA Transport Configuration" complex types as described in "MORA Common Complex Types" shall be provided; these transport configurations shall correspond to N number of client devices that are authorized to control the signal port. The requesting user shall

be the first MORA Transport Configuration in the list. The optional field of "Signal Data Transport Configuration" in the "MORA Transport Configuration" complex type shall not be provided for reserving an analog signal port or a digital signal port performing a "CONSUMER" role. If "Signal Data Transport Configuration" is included in these cases and is well formed, it shall be ignored.

2. The return value shall be a "Reservation Confirmation" complex type, as described in "MORA Common Complex Types", when the signal port the user wishes to reserve is currently unreserved or reserved by a lower priority user as compared to the requester's priority. The priority of additional authorized users, if contained in the request argument, shall not be considered.
3. Error conditions for "Reserve Signal Port" shall be handled as follows. If the signal port has already been reserved by a user of equal or higher priority, then an error of "GENERIC_FAULT" with error text of "Signal port already reserved" shall be returned. If the "ID" is not valid for the device, then an error of "GENERIC_FAULT" with error text of "Invalid signal port id" shall be returned. If the "ID" is valid for the device, but not compatible with the current MORA Configuration, then an error of "GENERIC_FAULT" with error text of "Incompatible signal port id" shall be returned. If the signal port is available but was not reserved due to a Signal Port Manager error response to the MDM Type 4 message, then an error of "GENERIC_FAULT" with error text of "SPM error" shall be returned. If the "ID" of the Signal Port or any of the fields in the provided list of MORA Transport Configuration, are outside of their respective bounds, then an "OUT_OF_RANGE" error may be returned.
4. *NOTE: A "Set Current MORA Configuration" operation can have an impact on any number of device and/or signal resource operations, depending on the specific implementation, including signal port reservations.*

iii. Release Signal Port

1. The argument for "Release Signal Port" shall be a "Reservation Confirmation" complex type as described in "MORA Common Complex Types". The argument shall match the "Reservation Confirmation" which was returned upon the reservation of the signal port.
2. The return value shall be an error of "NO_ERROR".
3. Error conditions for "Release Signal Port" are described as follows. If the signal port has already been released, then an error of "GENERIC_FAULT" with error text of "Signal port not reserved" shall be returned. If the argument's "Confirmation Number" does not match, then an error of "GENERIC_FAULT", with error text of "Confirmation number mismatch", shall be returned. If the "ID" is not valid for the device, then an error of "GENERIC_FAULT" with error text of "Invalid signal port id" shall be returned. If the "ID" is valid for the device, but not compatible with the current MORA Configuration, then an error of "GENERIC_FAULT" with error text of "Incompatible signal port id" shall be returned. If the signal port was not released due to a Signal Port Manager error response to the MDM Type 4 message, then an error of "GENERIC_FAULT" with error text of "SPM error" shall be returned. If any of the fields in the provided Reservation Confirmation are outside of their respective bounds, then an "OUT_OF_RANGE" error may be returned.
4. *NOTE: A "Set Current MORA Configuration" operation can have an impact on any number of device and/or signal resource operations, depending on the specific implementation, including signal port reservations.*

2. **Signal Port Reservations**
   a. This parameter describes the current signal port reservations that are active on the MORA Device.
   b. Operations
      i. Get Signal Port Reservations

            1. Arguments for "Get Signal Port Reservations" shall be empty.
            2. The return value shall be a list of "Signal Port Reservation" complex types as described in "MORA Common Complex Types". If there are no reservations, then an empty list shall be returned.

3. **Signal Port Description**
    a. This parameter further describes the functionality of a signal port.
    b. Operations
        i. Get Signal Port Description
            1. Arguments for "Get Signal Port Description" shall be an "ID" that is corresponding to a "Signal Port".
            2. The return value is a "Signal Port Description" complex type as described in "MORA Common Complex Types".
            3. Error conditions for "Get Signal Port Description" are as follows. If the "ID" is not valid for the device, then an error of "GENERIC_FAULT" with error text of "Invalid signal port id" shall be returned. If the "ID" of the Signal Port is out of bounds, then an "OUT_OF_RANGE" error may be returned.
4. **Signal Port Default Performance Data**
    a. This parameter describes the default performance data for a signal port.
    b. Operations
        i. Get Signal Port Default Performance Data
            1. Arguments for "Get Signal Port Default Performance Data" shall be an "ID" that is corresponding to a "Signal Port".
            2. The return value shall be a "Port Default Performance Data" complex type as described in "MORA Common Complex Types".
            3. Error conditions for "Get Signal Port Default Performance Data" are as follows. If the "ID" is not valid for the device, then an error of "GENERIC_FAULT" with error text of "Invalid signal port id" shall be returned. If the "ID" of the Signal Port is out of bounds, then an "OUT_OF_RANGE" error may be returned.
5. **Static External Connection Map**
    a. This parameter describes the static (non-switching or non-changing) external connections between signal ports to other MORA Devices.
    b. This connection map is applicable for analog signal ports (ATR, ATX, ARX, ARI, and ARO).
    c. Operations
        i. Get Static External Connection Map
            1. Arguments for "Get Static External Connection Map" are empty
            2. The return value shall be a list of "External Connection" complex types as described in "MORA Common Complex Types". If there are no static external connections, then an empty list shall be returned.
6. **Static Internal Connection Map**
    a. This parameter describes the static (non-switching or non-changing) internal connections between internal signal ports.
    b. Operations
        i. Get Static Internal Connection Map
            1. Arguments for "Get Static Internal Connection Map" shall be empty
            2. The return value shall be a list of "Connection" complex types as described in "MORA Common Complex Types". If there are no static internal connections, then an empty list shall be returned.
7. **Internal Reference Connections**
    a. This parameter shall describe which internal reference signal ports (ARO, ARI, DRO, and DRI) are available to non-reference signal ports (ATR, ARX, ATX, DTR, DRX, and DTX).
    b. Operations
        i. Get Internal Reference Connections

1. Arguments for "Get Internal Reference Connections" shall be empty.
2. The return value shall be a list of "Reference Connection" complex types as described in "MORA Common Complex Types". If there are no reference signal ports present, then an empty list shall be returned.

8. **Antenna Arrays**
   a. This parameter shall describe all antenna arrays and their elements that are attached to the MORA Device.
   b. Operations
      i. Get Antenna Arrays
         1. Arguments for "Get Antenna Arrays" shall be empty
         2. The return value shall be a list of "Antenna Array" complex types as described in "MORA Common Complex Types". If there are no antenna arrays attached to the MORA Device, then an empty list shall be returned.
9. **Manifold Bands**
   a. This parameter describes the manifold bands and how they are associated with the physical hardware.
   b. Operations
      i. Get Manifold Bands
         1. Arguments for "Get Manifold Bands" shall be empty.
         2. The return value shall be a list of "Manifold Band" complex types as described in "MORA Common Complex Types". If there are no manifold bands on the MORA Device, then an empty list shall be returned.

5.3.3.1.2 Radio Frequency Distribution Management Parameters <49005-20201002, Pro>

A textual representation of the Radio Frequency Distribution Management Parameters implementation shall be in accordance with the following section. The Appendix titled "APPENDIX B: MORA WSDLS" provides additional details for the Web Services Definition Language (WSDL) that describes Radio Frequency Distribution Management Parameters.

The following operations prescribe specific conditions which describe request message errors that shall result in a return of a specific error type and specific error text attachment. All error types are additionally described in the "Management Interface Error Types" section of the VICTORY Standard Specifications and shall apply to the following management parameter operations. Validation shall occur in the following order: for XML/Schema validity, for device instance validity and then device functional compatibility (if applicable). For example, Switch Group ID would first validate that it is an integer within bounds (1-127), and then validate against the device profile (the Switch Group ID exists on that specific device).

The terms "restricted string" and "restricted URI" are described in VICTORY sections titled "String Bounds" and "URI Bounds" under "VICTORY Data Types". String enumerations further restrict the String Bounds to the predefined list of values.

1. **Switch Groups**
   a. This parameter describes the possible states of an analog switch matrix.
   b. Operations
      i. Get Switch Groups
         1. Arguments for "Get Switch Groups" shall be empty.
         2. The return value for "Get Switch Groups" shall be a list of "Switch Group" complex types as described in "Radio Frequency Distribution Complex Types". If there are no switch groups, then an empty list shall be returned.
      ii. Reserve Switch Group
         1. Arguments for "Reserve Switch Group" shall be an "ID" that corresponds to the "Switch Group" the user wishes to reserve. In addition, a list of "MORA Transport Configuration" complex types as described in "MORA Common Complex Types"

shall be provided; these transport configurations shall correspond to N number of devices that are authorized to control the resource. The requesting user shall be the first MORA Transport Configuration in the list. The optional field of "Signal Data Transport Configuration" in the "MORA Transport Configuration" complex type shall not be provided for reserving a switch group. If "Signal Data Transport Configuration" is included in this case and is well formed, it shall be ignored.

2. The return value shall be a "Reservation Confirmation" complex type, as described in "MORA Common Complex Types", when the switch group the user wishes to reserve is currently unreserved or reserved by a lower priority user as compared to the requester's priority. The priority of additional authorized users, if contained in the request argument, shall not be considered.
3. Error conditions for "Reserve Switch Group" shall be handled as follows. If the switch group has already been reserved by a user of equal or higher priority, then an error of "GENERIC_FAULT" with error text of "Switch group already reserved" shall be returned. If the "ID" is not valid for the device, then an error of "GENERIC_FAULT" with error text of "Invalid switch group id" shall be returned. If the switch group is available but was not reserved due to a Signal Port Manager error response to the MDM Type 7 message, then an error of "GENERIC_FAULT" with error text of "SPM error" shall be returned. If the "ID" of the Switch Group or any of the fields in the provided list of MORA Transport Configuration are outside of their respective bounds, then an "OUT_OF_RANGE" error may be returned.

iii. Release Switch Group

1. The argument for "Release Switch Group" shall be a "Reservation Confirmation" complex type as described in "MORA Common Complex Types". The argument shall match the "Reservation Confirmation" which was returned upon the reservation of the switch group.
2. The return value shall be an error of "NO_ERROR".
3. Error conditions for "Release Switch Group" are as follows. If the switch group has already been released, then an error of "GENERIC_FAULT" with error text of "Switch group not reserved" shall be returned. If the argument's "Confirmation Number" does not match, then an error of "GENERIC_FAULT", with error text of "Confirmation number mismatch", shall be returned. If the "ID" is not valid for the device, then an error of "GENERIC_FAULT" with error text of "Invalid switch group id" shall be returned. If the switch group was not released due to a Signal Port Manager error response to the MDM Type 7 message, then an error of "GENERIC_FAULT" with error text of "SPM error" shall be returned. If any of the fields in the provided Reservation Confirmation are outside of their respective bounds, then an "OUT_OF_RANGE" error may be returned.

2. **Switch Group Reservations**

a. This parameter describes the current switch group reservations that are active on the MORA Device.

b. Operations

i. Get Switch Group Reservations

1. Arguments for "Get Switch Group Reservations" shall be empty.
2. The return value shall be a list of "Switch Group Reservation" complex types as described in "Radio Frequency Distribution Complex Types". If there are no reservations, then an empty list shall be returned.

5.3.3.2 MORA Signal Resource Manager Operations Interface <MT90017-V2.4>

The MORA Signal Resource Manager Operations Interface provides methods to interact with the MORA Signal Port Manager component type. These methods include the ability to exchange the identity of the user(s) who have reserved any

signal port or switch group. These methods also include time of day announcement and health updates and supports acknowledgement messaging.

The MORA Signal Resource Manager Interface implementation shall be in accordance with Table 17 below.

Table 17 MORA Signal Resource Manager Operations Interface <MT90017-V2.4>

Spec Title	Spec Tag	Applicability
MDM Protocol Specifications	MT96001-V2.4	Required
MDM Acknowledgement Message (Type 2) Specification	48611-20180928, Exp	Required
MDM Time of Day Message (Type 3) Specification	48612-20170531, Exp	Required
MDM Signal Port User ID Message (Type 4) Specification	48613-20201002, Exp	Required
MDM Health Message (Type 5) Specification	48614-20200707, Exp	Required
MDM Networking Specifications	MT96002-V2.4	Optional*
MDM Switch Group User ID Message (Type 7) Specification	48617-20200707, Exp	Optional

* Required for MDMs transiting a network

5.3.4 MORA Signal Port Manager <MT92016-V2.4>

The MORA Signal Port Manager is a component type that defines interfaces for high-speed and low latency control of signal ports.

Any MORA Device that contains signal resources shall implement the MORA Signal Port Manager component type in accordance with Table 18 below.

Table 18 MORA Signal Port Manager <MT92016-V2.4>

Spec Title	Spec Tag	Applicability
RF Layer Analog Data Interface	MT90011-V2.1	(1) Required: MT90011 or MT90014
RF Layer Digital Data Interface	MT90014-V2.4	
RF Layer Command Interface	MT90012-V2.4	Required
RF Layer Context Interface	MT90013-V2.4	Required
RF Layer Operations Interface	MT90015-V2.4	Required

(1) One or more of MT90011, MT90014 is Required

5.3.4.1 RF Layer Analog Data Interface <MT90011-V2.1>

The RF Layer Analog Data Interface implementation shall be in accordance with Table 19 below.

Table 19 RF Layer Analog Data Interface <MT90011-V2.1>

Spec Title	Spec Tag	Applicability
Coaxial Cable Specification	47001-20150918, Pro	Required
Optical Fiber Specification	47002-20140530, Exp	Optional

5.3.4.1.1 Coaxial Cable Specification <47001-20150918, Pro>

Coaxial cables shall have an impedance of 50 ohms and a minimum power handling of +20 decibel-milliwatt (dBm).

5.3.4.1.2 Optical Fiber Specification <47002-20140530, Exp>

Specification has not yet been defined.

5.3.4.2 RF Layer Command Interface <MT90012-V2.4>

The RF Layer Command Interface for the transmission of packetized command data over the ML2B network shall be in accordance with Table 20 below.

Table 20 RF Layer Command Interface <MT90012-V2.4>

Spec Title	Spec Tag	Applicability
MDM Protocol Specifications	MT96001-V2.4	Required
MDM Networking Specifications	MT96002-V2.4	Required
MDM VRT Message Structure Specification	48607-20200707, Exp	Required
MDM VRT Context and Command Fields Specification	48616-20210301, Exp	Required
MDM VRT Command Packet Type Specification	48610-20200903, Exp	Required
MDM Acknowledgement Message (Type 2) Specification	48611-20180928, Exp	Required
MORA Low Latency Bus Performance Specification	48201-20160131, Exp	Recommended

5.3.4.3 RF Layer Context Interface <MT90013-V2.4>

The RF Layer Context Interface for the transmission of packetized RF context data over the ML2B network shall be in accordance with Table 21 below.

Table 21 RF Layer Context Interface <MT90013-V2.4>

Spec Title	Spec Tag	Applicability
MDM Protocol Specifications	MT96001-V2.4	Required
MDM Networking Specifications	MT96002-V2.4	Required
MDM VRT Message Structure Specification	48607-20200707, Exp	Required
MDM VRT Context and Command Fields Specification	48616-20210301, Exp	Required
MDM VRT Context Packet Type Specification	48609-20200903, Exp	Required
MDM Multicast Dissemination Specification	48801-20170531, Exp	Required
MORA Low Latency Bus Performance Specification	48201-20160131, Exp	Recommended

5.3.4.4 RF Layer Digital Data Interface <MT90014-V2.4>

The RF Layer Digital Data Interface for the transmission of packetized RF data over the ML2B network shall be in accordance with Table 22 below.

Table 22 RF Layer Digital Data Interface <MT90014-V2.4>

Spec Title	Spec Tag	Applicability
MDM Protocol Specifications	MT96001-V2.4	Required
MDM Networking Specifications	MT96002-V2.4	Required
MDM VRT Message Structure Specification	48607-20200707, Exp	Required
MDM VRT Signal Data Packet Type Specification	48608-20200707, Exp	Required
MDM Multicast Dissemination Specification	48801-20170531, Exp	Required
MORA Low Latency Bus Performance Specification	48201-20160131, Exp	Recommended

5.3.4.5 RF Layer Operations Interface <MT90015-V2.4>

The RF Layer Operations Interface for the transmission of packetized operations data over the ML2B network shall be in accordance with Table 23 below.

Table 23 RF Layer Operations Interface <MT90015-V2.4>

Spec Title	Spec Tag	Applicability
MDM Protocol Specifications	MT96001-V2.4	Required
MDM Acknowledgement Message (Type 2) Specification	48611-20180928, Exp	Required
MDM Time of Day Message (Type 3) Specification	48612-20170531, Exp	Required
MDM Signal Port User ID Message (Type 4) Specification	48613-20201002, Exp	Required
MDM Health Message (Type 5) Specification	48614-20200707, Exp	Required
MDM Command Message (Type 6) Specification	48615-20200707, Exp	Required
MDM Switch Group User ID Message (Type 7) Specification	48617-20200707, Exp	Required
MDM Networking Specifications	MT96002-V2.4	Optional*

* Required for MDMs transiting a network

5.3.4.6 MDM Multicast Dissemination Specification <48801-20170531, Exp>

This specification requires that all messages shall be sent to an IP multicast group and port.

5.3.5 Complex Type Definitions

This section contains all the complex type definitions referenced in this document. Within the complex type definitions, values are string, integer, real number, or Boolean.

5.3.5.1 MORA Common Complex Types <49016-20210301, Pro>

The following is a list of "MORA Common Complex Types" that are referenced by the MORA specifications. Implementations shall be in accordance with the following sections.

Due to the natural interdependency on messaging over the VDB and ML2B, it is important that values which may need to be represented in a binary format (on the ML2B) be constrained accordingly. All "integer" values shall be 32-bit integers, unless otherwise specified, and all "real numbers" shall be 32-bit floating point numbers, unless specified otherwise. There are instances where some values require a larger range; these values shall be specified as 64-bit integers (long) or 64-bit floating point numbers (double) where necessary.

The terms "restricted string" and "restricted URI" are described in VICTORY sections titled "String Bounds" and "URI Bounds" under "VICTORY Data Types". String enumerations further restrict the String Bounds to the predefined list of values.

1. **Antenna Array**
    a. ID
        i. A unique identifier for the array attached to a MORA device.
        ii. ID shall be an integer between 0 and 31, inclusive, in accordance with enumeration as described in "Reference Point Identifier (CIF 0/Bit 30)". The ID of zero shall be used to enumerate unlike elements that are not part of a true array.
        iii. ID shall be provided as part of Antenna Array.
    b. Type
        i. Identifies the type of the antenna array.
        ii. Type shall be a restricted string chosen from the following:
            1. CIRCULAR
            2. DISCRETE
            3. CONFORMAL
            4. LINEAR_2D
            5. LINEAR_3D
            6. COLUMN
        iii. Type shall be provided as part of Antenna Array.
    c. Steering Control
        i. Describes the type of steering control for the antenna array.
        ii. Steering Control shall be a restricted string chosen from the following:
            1. FIXED
            2. MECHANICAL
            3. BEAMFORMER
        iii. Steering Control shall be provided as part of Antenna Array.
    d. Array Field of View
        i. Field of view of the antenna array relative to the platform heading.
        ii. Array Field of View shall be an "RF Field of View" complex type as described in the section "MORA Common Complex Types".
        iii. Array Field of View shall be provided as part of Antenna Array
    e. Elements
        i. A list of antenna elements associated with the array.
        ii. Elements shall be a list of "Array Element" complex type as described in "MORA Common Complex Types".
        iii. Elements shall contain at least one and no more than 65,535 items in its list.
        iv. Elements shall be provided as part of Antenna Array.
2. **Aperture Channel**
    a. ID

        i. The identifier of the aperture channel.
        ii. ID shall be an integer greater than 0.
        iii. ID shall be provided as part of Aperture Channel.
    b. Channel Description
        i. A description of the antenna element(s) associated with the Aperture Channel and their corresponding mathematical relationship (in the case of multiple elements).
        ii. Channel Description shall be a restricted string.
        iii. Channel Description shall be provided as part of Aperture Channel.
    c. Associated Signal Port
        i. The signal port identifier associated with the channel.
        ii. Associated Signal Port shall be an integer between 1 and 127, inclusive.
        iii. Associated Signal Port shall be included as part of Aperture Channel.
    d. Associated Sub Port
        i. The sub port identifier associated with the channel.
        ii. Associated Sub Port shall be an integer between 1 and 65,535, inclusive.
        iii. Associated Sub Port may be provided as part of Aperture Channel.

3. **Array Element**
    a. ID
        i. Unique identifier for this antenna element relative to the array.
        ii. ID shall be an integer between 1 and 65,535, inclusive, in accordance with enumeration as described in "Reference Point Identifier (CIF 0/Bit 30)".
        iii. ID shall be provided as part of Array Element.
    b. Type
        i. A descriptor of the antenna element type.
        ii. Type shall be a restricted string chosen from the following:
            1. MONOPOLE
            2. DIPOLE
        iii. Type shall be provided as part of Array Element.
    c. Polarizations
        i. The polarizations of the array element.
        ii. Polarizations shall be a list of "Polarization" complex type as described in the section "MORA Common Complex Types".
        iii. Polarizations shall contain at least one item in its list.
        iv. Polarizations shall be provided as part of Array Element.
    d. Frequency Range
        i. The frequency range of the antenna element.
        ii. Frequency Range shall be a "Frequency Range" complex type as described in the section "MORA Common Complex Types".
        iii. Frequency Range shall be provided as part of Array Element.
    e. Location
        i. Position of the antenna element relative to the center of the platform.
        ii. Location shall be represented as a "Relative Cartesian Coordinates" complex type as described in "MORA Common Complex Types".
        iii. Location shall be provided as part of Array Element.
    f. Boresight Gain
        i. The antenna element nominal gain at the boresight of the element.
        ii. Boresight Gain shall be a real number in dBi.
        iii. Boresight Gain shall be provided as part of Array Element.
    g. Beamwidth
        i. The field of view of the antenna element relative to the boresight of the element.
        ii. Beamwidth shall be an "RF Field of View" complex type as described in the section "MORA Common Complex Types".

iii. Beamwidth shall be provided as part of Array Element.

4. **Associated Elements**
    a. Array ID
        i. The identifier of the array
        ii. Array ID shall be an integer between 0 and 31, inclusive. The ID of 0 shall be used to enumerate unlike elements that are not part of a true array.
        iii. Array ID shall be provided as part of Associated Elements.
    b. Elements
        i. A list of element identifier(s)
        ii. Elements shall be a list of integers between 1 and 65,535, inclusive.
        iii. Elements shall contain at least one and at most 65,535 items in its list.
        iv. Elements shall be provided as part of Associated Elements.
5. **Azimuth Range**
    a. Azimuth Start
        i. The starting point of the azimuth range.
        ii. Azimuth Start shall be a real number, greater than or equal to 0 and less than 360, in arc degrees.
        iii. The range criteria shall be defined as the sector beginning at the Azimuth Start value and moving clockwise to the Azimuth Stop value.
        iv. Azimuth Start shall be provided as part of Azimuth Range.
    b. Azimuth Stop
        i. The stopping point of the azimuth range.
        ii. Azimuth Stop shall be a real number, greater than or equal to 0 and less than 360, in arc degrees.
        iii. The range criteria shall be defined as the sector beginning at the Azimuth Start value and moving clockwise to the Azimuth Stop value.
        iv. Azimuth Stop shall be provided as part of Azimuth Range.
6. **Built-In Test Result**
    a. Test Name
        i. The name of the test or testing parameter.
        ii. Test Name shall be a restricted string that is human-readable.
        iii. Test Name shall be provided as part of Built-In Test Result.
    b. Test Result
        i. The result of the test.
        ii. Test Result shall be a restricted string chosen from the choices below:
            1. PASS
            2. FAIL
        iii. Test Result shall be provided as part of Built-In Test Result.
    c. Test Result Description
        i. A description of the test result.
        ii. Test Result Description shall be a restricted string that is human-readable.
        iii. Test Result Description shall be provided as part of Built-In Test Result.
7. **Circular Region**
    a. Exclusive
        i. Denotes whether this region is inclusive or exclusive.
        ii. Exclusive shall be a Boolean value where True indicates the region is outside the circle and False indicates the region is inside the circle.
        iii. Exclusive shall be provided as part of Circular Region.
    b. Center
        i. The center position of the region.
        ii. Center shall be a VICTORY “Position” complex type as described in the “Position Complex Types” section of the VICTORY Standard Specifications.
        iii. Center shall be provided as part of Circular Region.
    c. Radius
        i. The radius of the circular region.

        ii. Radius shall be a real number in meters.
        iii. Radius shall be provided as part of Circular Region.

8. **Compensation Criteria**
    a. Initialization
        i. Describes the amount of time after start-up to run the initial compensation.
        ii. Initialization shall be an integer, greater than 0, in milliseconds.
        iii. Initialization shall be provided as part of Compensation Criteria.
    b. Task Start
        i. Indicates whether compensation runs prior to every task.
        ii. Task Start shall be a Boolean value.
        iii. Task Start may be provided as part of Compensation Criteria.
    c. Temperature Interval
        i. Describes the maximum temperature change when compensation must be run again.
        ii. Temperature Interval shall be an integer, greater than 0, in degrees Celsius.
        iii. Temperature Interval may be provided as apart of Compensation Criteria.
        iv. NOTE: The criteria is met when the temperature increases or decreases by the Temperature Interval value.
    d. Time Interval
        i. The maximum amount of elapsed time when compensation must be run again.
        ii. Time Interval shall be an integer, greater than 0, in milliseconds.
        iii. Time Interval may be provided as part of Compensation Criteria.
    e. Tuning Event
        i. Describes the maximum frequency change when compensation must be run again.
        ii. Tuning Event shall be an integer, greater than 0, in Hz.
        iii. Tuning Event may be provided as part of Compensation Criteria.
        iv. NOTE: The criteria is met when the frequency increases or decreases by the Tuning Event value.

9. **Connection**
    a. Port ID 1
        i. Identifies the first signal port id of the connection.
        ii. Port ID 1 shall be integer between 1 and 127, inclusive.
        iii. Port ID 1 shall be provided as part of Connection.
        iv. Port ID 1 shall be less than Port ID 2.
        v. The association of Port ID 1 and Port ID 2 shall be unique.
    b. Port ID 2
        i. Identifies the second signal port id of the connection.
        ii. Port ID 2 shall be integer between 1 and 127, inclusive.
        iii. Port ID 2 shall be provided as part of Connection.
        iv. Port ID 1 shall be less than Port ID 2.
        v. The association of Port ID 1 and Port ID 2 shall be unique.
    c. Gain Delta
        i. The change in gain that this connection introduces if selected.
        ii. Gain Delta shall be a real number in dB.
        iii. Gain Delta shall be provided as part of Connection.
    d. Delay Delta
        i. The change in the delay that this connection introduces if selected.
        ii. Delay Delta shall be an integer (64-bit) in femtoseconds.
        iii. Delay Delta shall be provided as part of Connection.
        iv. NOTE: The total RX Delay is characterized from the antenna phase center to the ADC in a default state (at full gain and with selectable filters set to bypass). The total TX Delay is characterized from the DAC to the antenna phase center in a default state (at full gain and with selectable filters set to bypass). This characterization may involve a single device/port or multiple devices/ports connected in series. Individual ports declare (Signal Port complex type) their contribution in a default state towards the total delay. Individual ports will also declare

(Signal Port Description and Switch State complex types) delay deltas associated with controllable attributes (e.g., filter selections, switch state selections). Additionally, all devices will declare (External Connection complex type) the contribution of external coaxial cables as part of the total delay.

10. **Device Specific Status**
    a. Name
        i. Name shall be a restricted string that is human-readable.
        ii. Name shall be prefixed by a namespace to establish uniqueness.
        iii. Name shall be provided as part of Device Specific Status.
    b. Value
        i. Value shall be a restricted string that is human-readable.
        ii. Value shall be provided as part of Device Specific Status.
11. **Device Status**
    a. State
        i. The current state of the MORA device.
        ii. State shall be a restricted string chosen from one of the following values:
            1. OPERATIONAL
            2. STANDBY
                a. Application is halted
            3. TRANSMIT_INHIBIT
                a. Application is active but not transmitting
            4. FAULT
            5. ZEROIZED
            6. MAINTENANCE_MODE
            7. SANITIZED
        iii. State shall be provided as part of Device Status.
    b. Time Synchronized
        i. Indicates whether the MORA device is time synchronized.
        ii. A Boolean value of True means the device is synchronized and a value of False means the device is not synchronized
        iii. Time Synchronized may be provided as part of Device Status.
    c. Calibrated
        i. Indicates whether or not the most recent calibration attempt was a success.
        ii. A Boolean value of True means the calibration was a success and a Boolean value of False means the calibration failed.
        iii. Calibrated may be provided as part of Device Status.
    d. Built-In Test Summary Result
        i. The summary result of the last built-in test.
        ii. Built-In Test Result shall be a restricted string chosen from one of the following values:
            1. PASS
            2. IN-PROGRESS
            3. FAIL
        iii. Built-In Test Result may be provided as part of Device Status.
    e. Power Consumption
        i. Current consumption of the power supply for the MORA device.
        ii. Power Consumption shall be a real number, greater than 0, in watts.
        iii. Power Consumption may be provided as part of Device Status.
    f. Battery Remaining
        i. Current battery power remaining for the MORA device as a percentage.
        ii. Battery Remaining shall be a real number between 0 and 100, inclusive.
        iii. Battery Remaining may be provided as part of Device Status.
    g. Temperature

i. Temperature of the MORA device.
ii. Temperature shall be a real number greater than or equal to -273.15.
iii. Temperature shall be in degrees Celsius.
iv. Temperature may be provided as part of Device Status

h. Software Version
i. Software version of the MORA device.
ii. Software Version shall be a restricted string.
iii. Software Version shall be provided as part of Device Status.

i. Disk Space Available
i. Amount of free disk space on the MORA device.
ii. Disk Space Available value shall be a real number, greater than or equal to 0, in kilobytes.
iii. Disk Space Available may be provided as part of Device Status.

j. CPU Usage
i. Percentage of CPU usage of the MORA device.
ii. CPU Usage shall be a real number between 0 and 100, inclusive.
iii. CPU Usage may be provided as part of Device Status.

k. Memory Usage
i. Percentage of random access memory (RAM) used on the MORA device.
ii. Memory Usage shall be a real number between 0 and 100, inclusive.
iii. Memory Usage may be provided as part of Device Status.

l. Description
i. A general description of the MORA device.
ii. Description shall be a restricted string that is human-readable.
iii. Description shall be provided as part of Device Status.

m. Device Specific Statuses
i. A list of statuses specific to a type of MORA device.
ii. Device Specific Statuses shall be a list of "Device Specific Status" complex types as described in the section "MORA Common Complex Types".
iii. Device Specific Statuses shall contain at least one item in its list.
iv. Device Specific Statuses may be provided as part of Device Status.

12. **Elevation Range**

a. Elevation Start
i. The starting point of the elevation range.
ii. Elevation Start shall be a real number, greater than or equal to -90 and less than or equal to 90, in arc degrees.
iii. The range criteria shall be defined as the sector beginning at the Elevation Start value and moving towards the zenith to the Elevation Stop value.
iv. Elevation Start shall be provided as part of Elevation Range.

b. Elevation Stop
i. The stopping point of the elevation range.
ii. Elevation Stop shall be a real number, greater than or equal to -90 and less than or equal to 90, in arc degrees.
iii. The range criteria shall be defined as the sector beginning at the Elevation Start value and moving towards the zenith to the Elevation Stop value.
iv. Elevation Stop shall be provided as part of Elevation Range.

13. **Elliptical Region**

a. Exclusive
i. Denotes whether this region is inclusive or exclusive.
ii. Exclusive shall be a Boolean value where True indicates the region is outside the ellipse and False indicates the region is inside the ellipse.
iii. Exclusive shall be provided as part of Elliptical Region.

b. Center

i. The center position of the region.
ii. Center shall be a VICTORY "Position" complex type as described in the "Position Complex Types" section of the VICTORY Standard Specifications.
iii. Center shall be provided as part of Elliptical Region.

c. Semi-Major Axis
i. It is the radius of an ellipse at the ellipse's two most distant points.
ii. Semi-Major Axis shall be a real number in meters.
iii. Semi-Major Axis shall be greater than Semi-Minor Axis.
iv. Semi-Major Axis shall be provided as part of Elliptical Region.

d. Semi-Minor Axis
i. It is the radius of an ellipse at the ellipse's two closest points.
ii. Semi-Minor Axis shall be a real number in meters.
iii. Semi-Minor Axis shall be less than the Semi-Major Axis.
iv. Semi-Minor Axis shall be provided as part of Elliptical Region.

e. Rotation
i. The clockwise rotation of the ellipse's semi-major axis from true north.
ii. Rotation shall be a real number, greater than or equal to 0 and less than 180, in arc degrees.
iii. Rotation shall be provided as part of Elliptical Region.

14. **External Connection**

a. Local Signal Port ID
i. The identifier of the internal, or local, signal port.
ii. Local Signal Port ID shall be an integer between 1 and 127, inclusive.
iii. Local Signal Port ID shall be provided as part of External Connection.

b. External Signal Port ID
i. The identifier of the external, or remote, signal port.
ii. External Signal Port ID shall be an integer between 1 and 127, inclusive.
iii. External Signal Port ID shall be provided as part of External Connection.

c. External Device
i. Description of the external device.
ii. External Device shall be a "MORA Device" complex type as described in "MORA Common Complex Types".
iii. External Device shall be provided as part of External Connection.

d. Gain Delta
i. The gain difference between the local signal port and the external signal port.
ii. Gain Delta shall be a real number in dB.
iii. Gain Delta may be provided as part of External Connection.

e. Delay Delta
i. The delay difference between the local signal port and the external signal port.
ii. Delay Delta shall be an integer (64-bit) in femtoseconds.
iii. Delay Delta may be provided as part of External Connection.
iv. NOTE: The total RX Delay is characterized from the antenna phase center to the ADC in a default state (at full gain and with selectable filters set to bypass). The total TX Delay is characterized from the DAC to the antenna phase center in a default state (at full gain and with selectable filters set to bypass). This characterization may involve a single device/port or multiple devices/ports connected in series. Individual ports declare (Signal Port complex type) their contribution in a default state towards the total delay. Individual ports will also declare (Signal Port Description and Switch State complex types) delay deltas associated with controllable attributes (e.g., filter selections, switch state selections). Additionally, all devices will declare (External Connection complex type) the contribution of external coaxial cables as part of the total delay.

15. **Filter**

a. ID
i. Unique identifier for a filter within a filter bank.

    ii. ID shall be an integer between 0 and 31, inclusive.
    iii. ID shall be provided as part of Filter.
    iv. The ID of 0 shall be reserved for the bypass state of a filter bank.

b. Signal Direction
    i. Direction of the signal, either transmit, receive, or transmit or receive (half duplex).
    ii. Signal Direction shall be a restricted string chosen from the following:
        1. TX
        2. RX
        3. TOR
    iii. Signal Direction shall be provided as part of Filter.

c. Filter Logic
    i. Identifies whether the filter is fixed, selectable, or tunable.
    ii. Filter Logic shall be a restricted string chosen from the following:
        1. FIXED
        2. SELECTABLE
        3. TUNABLE
    iii. Filter Logic shall be provided as part of Filter.

d. Filter Type
    i. Type of filter.
    ii. Filter Type shall be a restricted string chosen from the following:
        1. BAND_PASS
        2. BAND_REJECT
        3. HIGH_PASS
        4. LOW_PASS
        5. BYPASS
    iii. Filter Type shall be provided as part of Filter

e. Gain Delta
    i. The change in gain that this filter introduces if selected.
    ii. Gain Delta shall be a real number in dB.
    iii. Gain Delta shall be provided as part of Filter

f. Delay Delta
    i. The change in delay that this filter introduces if selected.
    ii. Delay Delta shall be an integer (64-bit) in femtoseconds.
    iii. Delay Delta shall be provided as part of Filter.
    iv. NOTE: The total RX Delay is characterized from the antenna phase center to the ADC in a default state (at full gain and with selectable filters set to bypass). The total TX Delay is characterized from the DAC to the antenna phase center in a default state (at full gain and with selectable filters set to bypass). This characterization may involve a single device/port or multiple devices/ports connected in series. Individual ports declare (Signal Port complex type) their contribution in a default state towards the total delay. Individual ports will also declare (Signal Port Description complex type) delay deltas associated with controllable attributes (e.g., filter selections). Additionally, all devices will declare (External Connection complex type) the contribution of external coaxial cables as part of the total delay.

g. Frequency Range
    i. The frequency range of the filter.
    ii. Frequency Range shall be a "Frequency Range" complex type as described in the section "MORA Common Complex Types".
    iii. Frequency Range shall be provided as part of Filter.

h. Bandwidth
    i. Indicates the bandwidth of the filter if it's tunable.
    ii. Bandwidth shall be a real number (64-bit), greater than 0, in Hz.
    iii. Bandwidth may be provided as part of Filter.

16. **Filter Bank**
    a. ID
        i. Unique identifier for the filter bank.
        ii. This value shall identify the Filter Bank in the MDM VRT Discrete I/O 64-bit field.
        iii. ID shall be an integer of 1, 2, or 3 in accordance with enumeration as described in "Discrete I/O 64-Bit (CIF 1/Bit 5)".
        iv. ID shall be provided as part of Filter Bank.
    b. Filters
        i. A list of filters that can be selected for the filter bank.
        ii. Filters shall be a list of "Filter" complex types as described in the section "MORA Common Complex Types".
        iii. Filters shall contain at least two and no more than 32 items in its list.
        iv. Filters shall be provided as part of Filter Bank.
17. **Frequency Range**
    a. Start
        i. The lower bound of the frequency range.
        ii. Start shall be a real number (64-bit), with a range of ±8.79 terahertz, in Hz and a fractional resolution of 0.95 microhertz.
        iii. Start shall be provided as part of Frequency Range.
    b. End
        i. The upper bound of the frequency range.
        ii. End shall be a real number (64-bit), with a range of ±8.79 terahertz, in Hz and a fractional resolution of 0.95 microhertz.
        iii. End shall be provided as part of Frequency Range.
    c. Resolution
        i. Resolution is the smallest unit the component can resolve.
        ii. Resolution shall be a real number (64-bit), greater than or equal to 0 and less than 8.79 terahertz, in Hz and a fractional resolution of 0.95 microhertz.
        iii. Resolution shall be provided as part of Frequency Range.
        iv. If the Resolution is not applicable to the use of the Frequency Range, it shall be set to 0.
18. **Frequency Translation**
    a. IF Center Frequencies
        i. A list of intermediate frequency center frequencies that are possible for a frequency translation function.
        ii. IF Center Frequencies shall be a list of real numbers (64-bit), greater than 0 and less than 8.79 terahertz, in Hz and a fractional resolution of 0.95 microhertz.
        iii. IF Center Frequencies shall contain at least one item in its list.
        iv. IF Center Frequencies shall be provided as part of Frequency Translation.
    b. IF Bandwidths
        i. A list of analog intermediate frequency bandwidths that are possible for a frequency translation function.
        ii. IF Bandwidths shall be a list of real numbers (64-bit), greater than 0 and less than 8.79 terahertz, in Hz and a fractional resolution of 0.95 microhertz.
        iii. IF Bandwidths shall contain at least one item in its list.
        iv. IF Bandwidths shall be provided as part of Frequency Translation.
    c. RF Range
        i. The radio frequency range of frequency translation function.
        ii. RF Range shall be a "Frequency Range" complex type as described in "MORA Common Complex Types".
        iii. RF Range shall be provided as part of Frequency Translation
    d. RF Bandwidths
        i. The analog radio frequency bandwidths of a frequency translation function.

ii. RF Bandwidths shall be a list of real numbers (64-bit), greater than 0 and less than 8.79 terahertz, in Hz and a fractional resolution of 0.95 microhertz.
iii. RF Bandwidths shall contain at least one item in its list.
iv. RF Bandwidths shall be provided as part of Frequency Translation.

e. Tuning Speed
   i. The tuning speed of the RF converter.
   ii. Tuning Speed shall be an integer (64-bit), greater than 0, in femtoseconds.
   iii. Tuning Speed shall be provided as part of Frequency Translation.

f. Sub Port RF Translations
   i. A list of frequency translation parameters for sub ports.
   ii. Sub Port RF Translations shall be a list of "Sub Port Frequency Translation" complex types as described in "MORA Common Complex Types".
   iii. Sub Port RF Translations shall contain at least one item in its list.
   iv. Sub Port RF Translations may be provided as part of Frequency Translation.

19. **Gain Stage**

a. Stage Number
   i. Unique identifier for a gain stage.
   ii. Stage Number shall be the integer 1 or 2, in accordance with enumeration as described in section Discrete I/O 32-Bit (CIF 1/Bit 6).
   iii. Stage Number shall be provided as part of Gain Stage.

b. Signal Direction
   i. Direction of the signal, either transmit, receive, or transmit or receive (half duplex).
   ii. Signal Direction shall be a restricted string chosen from the following:
      1. TX
      2. RX
   iii. Signal Direction shall be provided as part of Gain Stage.

c. Gain Type
   i. The type of gain stage.
   ii. Gain Type shall be a restricted string chosen from the following:
      1. AUTOMATIC
      2. MANUAL
      3. SELECTABLE
   iii. Gain Type shall be provided as part of Gain Stage.

d. Manual Gain
   i. Manual gain control description.
   ii. Manual Gain shall be a "Manual Gain" complex type as described in "MORA Common Complex Types".
   iii. Manual Gain may be provided as part of Gain Stage.

e. Output Level
   i. Automatic gain control description.
   ii. Output Level shall be an "Output Level" complex type as described in "MORA Common Complex Types".
   iii. Output Level may be provided as part of Gain Stage.

20. **Injected Power Range**

a. Min Injected Power
   i. The minimum power of the test source at the point of injection.
   ii. Min Injected Power shall be a real number, greater than -256 and less than +256, in dBm and a resolution of 1/128 dB (0.0078125 dB).
   iii. Min Injected Power shall be provided as part of Injected Power Range
   iv. NOTE: The Auxiliary Gain field in MDM Type 1 allows for the control of the injected power when a range is announced. The Auxiliary Gain field is used to obtain a specific injected power within the min/max range at the resolution specified. To achieve the Min Injected Power, the

Auxiliary Gain field would be set to a negative value of -xx.y dB, where xx.y = "Max Injected Power" (dBm) - "Min Injected Power" (dBm).

b. Max Injected Power
   i. The maximum power of the test source at the point of injection.
   ii. Max Injected Power shall be a real number, greater than -256 and less than +256, in dBm and a resolution of 1/128 dB (0.0078125 dB).
   iii. Max Injected Power shall be provided as part of Injected Power Range
   iv. NOTE: The Auxiliary Gain field in MDM Type 1 allows for the control of the injected power when a range is announced. The Auxiliary Gain field is used to obtain a specific injected power within the min/max range at the resolution specified. To achieve the Max Injected Power, the Auxiliary Gain field would be set to 0 dB.

c. Resolution
   i. The resolution of the test source at the point of injection.
   ii. Resolution shall be a real number, greater than or equal to 0 and less than 256, in dB and a resolution of 1/128 dB (0.0078125 dB).
   iii. Resolution shall be provided as part of Injected Power Range.
   iv. If the test source power is fixed, the Min Injected Power shall equal the Max Injected Power and the Resolution shall equal zero.

21. **Manifold Band**

a. Band ID
   i. Unique identifier for a manifold band.
   ii. Band ID shall be an integer unique to the band, between 1 and 2,047, inclusive, in accordance with enumeration as described in "Reference Point Identifier (CIF 0/Bit 30)".
   iii. Band ID shall be provided as part of Manifold Band.

b. Spatial Calibration
   i. Spatial calibration file for the manifold band.
   ii. Spatial Calibration shall be a "MORA File" complex type with "Type" value of CALIBRATION, as described in "MORA Common Complex Types".
   iii. Spatial Calibration shall not contain the optional field, "Content", in the "MORA File" complex type.
   iv. Spatial Calibration shall be provided as part of Manifold Band.

c. Frequency Range
   i. The frequency range of the manifold band.
   ii. Frequency Range shall be a "Frequency Range" complex type as described in "MORA Common Complex Types".
   iii. Frequency Range shall be provided as part of Manifold Band.

d. Field of View
   i. The field of view of the manifold band relative to platform forward.
   ii. Field of View shall be an "RF Field of View" complex type as described in "MORA Common Complex Types".
   iii. Field of View shall be provided as part of Manifold Band.

e. Manifold Band Elements
   i. The antenna elements associated with the manifold band.
   ii. Manifold Band Elements shall be a list of "Associated Elements" complex types as described in "MORA Common Complex Types".
   iii. Manifold Band Elements shall contain at least two items in its list.
   iv. Manifold Band Elements shall be provided as part of Manifold Band.

f. Aperture Channels
   i. The signal(s) captured from, or to be radiated by, an element or a combination of elements.
   ii. Aperture Channels shall be a list of "Aperture Channel" complex type as described in "MORA Common Complex Types".
   iii. Aperture Channels shall contain at least one item in its list.

iv. Aperture Channels shall be provided as part of Manifold Band.

g. Beamwidths
   i. The beamwidth(s) of the manifold band.
   ii. Beamwidths shall be a list of "RF Field of View" complex types as described in "MORA Common Complex Types".
   iii. Beamwidths shall contain at least one item in its list.
   iv. Beamwidths may be provided as part of Manifold Band.

22. **Manual Gain**
   a. Minimum Gain
      i. The minimum gain setting for a manual gain function.
      ii. Minimum Gain shall be a real number, greater than -256 and less than 256, in dB and a resolution of 1/128 dB (0.0078125 dB).
      iii. Minimum Gain shall be provided as part of Manual Gain.
   b. Maximum Gain
      i. The maximum gain setting for a manual gain function.
      ii. Maximum Gain shall be a real number, greater than -256 and less than 256, in dB and a resolution of 1/128 dB (0.0078125 dB).
      iii. Maximum Gain shall be provided as part of Manual Gain.
      iv.).
   c. Resolution
      i. The smallest unit of measure that a manual gain function can change.
      ii. Resolution shall be a real number, greater than 0 and less than 256, in dB and a resolution of 1/128 dB (0.0078125 dB).
      iii. Resolution shall be provided as part of Manual Gain.

23. **MORA Configuration**
   a. ID
      i. Unique identifier for a MORA Configuration.
      ii. ID shall be an integer greater than 0.
      iii. ID shall be provided as part of MORA Configuration.
   b. Name
      i. The name of the MORA Configuration.
      ii. Name shall be a human-readable restricted string.
      iii. Name shall be provided as part of MORA Configuration.
   c. Configuration Files
      i. The list of configuration files that comprise this configuration.
      ii. Configuration Files shall be a list of "File Name" that corresponds to a "MORA File" complex type as described in "MORA Common Complex Types" with "Type" of CONFIGURATION.
      iii. Configuration Files shall contain at least one item in its list.
      iv. Configuration Files may be provided as part of MORA Configuration.
   d. Supported Signal Ports
      i. The list of signal ports that are supported in this configuration.
      ii. Supported Signal Ports shall be a list of "ID" that corresponds to a "Signal Port" complex type as described in "MORA Common Complex Types".
      iii. Supported Signal Ports shall contain at least one item in its list.
      iv. Supported Signal Ports shall be provided as part of MORA Configuration.

24. **MORA Device**
   a. ID
      i. Unique identifier for a MORA device within a given device type.
      ii. ID shall be an integer between 1 and 63, inclusive.
      iii. ID shall be provided as part of MORA Device.
   b. Type
      i. The type of MORA device.

ii. Type shall be a restricted string chosen from the following:
    1. OTH
    2. RHD
    3. RCD
    4. SDR
iii. Type shall be provided as part of MORA Device.

c. Sub Type
    i. The sub type of the MORA device.
    ii. Sub Type shall be a restricted string chosen from the following:
        1. RXO
        2. TXO
        3. TOR
        4. TAR
    iii. Sub Type shall be provided as part of MORA Device.

d. Service Name
    i. The VICTORY service name that is used to identify the MORA Device component type.
    ii. Service Name shall be a unique restricted string for a MORA system.
    iii. Service Name shall be provided as part of MORA Device.

e. Version Info URL
    i. The URL of version information endpoint for this MORA Device component type.
    ii. Version Info URL shall be a restricted URI for a MORA system.
    iii. Version Info URL shall be provided as part of MORA Device.

25. **MORA File**

a. File Name
    i. The name of the file.
    ii. File Name shall be a restricted string.
    iii. File Name shall be unique within the scope of the device.
    iv. File Name shall be provided as part of MORA File.

b. Path
    i. The ASCII path of the file.
    ii. Path shall include the path of the file on the resource.
    iii. Path shall be a restricted string.
    iv. Path may be provided as part of MORA File.

c. Size
    i. The size of the file.
    ii. Size shall be an integer (64 bit) greater than or equal to 0.
    iii. Size shall be in bytes.
    iv. Size shall be provided as part of MORA File.

d. Type
    i. The type of file.
    ii. Type shall be a restricted string chosen from one of the following values:
        1. UNSPECIFIED
            a. Not able to specify the file type for this file.
        2. ERROR_LOG
            a. Log of all errors recorded on the asset.
        3. SYSTEM_LOG
            a. Log of system data recorded on the asset.
        4. LOCATION_LOG
            a. Log of the asset’s location over time.
        5. BIT_RESULTS
            a. Built-in test result file
        6. CALIBRATION

            a. A file describing calibration information.
        7. CONFIGURATION
            a. A file containing a configuration for a given application.
        8. APPLICATION
            a. A file containing an RF application or waveform.
        9. PROFILE
            a. A file describing the profile of resources within the device.
    iii. Type shall be provided as part of MORA File.

e. Date Modified
    i. The date that the file was last modified.
    ii. Date Modified shall be a VICTORY Timestamp data type as described in the "Timestamp Format for Application Layer Data" section of the VICTORY Standard Specifications.
    iii. Date Modified may be provided as part of MORA File.

f. Content
    i. Binary content of the file.
    ii. Content shall be a Base64 encoding of the file's data.
    iii. Content may be provided as part of MORA File.

26. **MORA Navigation**

a. Position
    i. The geographic position of the sensor.
    ii. Position shall be a VICTORY "Position" complex type as described in the "Position Complex Types" section of the VICTORY Standard Specifications.
    iii. Position may be provided as part of MORA Navigation.

b. Orientation
    i. The roll, pitch, and yaw of the sensor relative to the center of the earth.
    ii. Orientation shall be a VICTORY "Orientation" complex type as described in the "Orientation Complex Types" section of the VICTORY Standard Specifications.
    iii. Orientation may be provided as part of MORA Navigation.

c. Direction of Travel
    i. The direction in which the sensor is moving.
    ii. Direction of Travel shall be a VICTORY "Direction of Travel" complex type as described in the "Direction of Travel Complex Types" section of the VICTORY Standard Specifications.
    iii. Direction of Travel may be provided as part of MORA Navigation.

27. **MORA Transport Configuration**

a. Component ID
    i. The device type and identifier that scopes the rest of the data for MORA Transport Configuration.
    ii. Component ID shall be a restricted string composed of the concatenated "Type" and "ID" that corresponds to the "MORA Device" complex type as described in "MORA Common Complex Types". There shall not be any zero padding on the "ID" field.
    iii. Component ID shall be provided as part of MORA Transport Configuration.

b. Signal Port ID
    i. The unique identifier of the signal port associated with the MORA Transport Configuration.
    ii. Signal Port ID shall be an integer between 1 and 127, inclusive.
    iii. Signal Port ID may be provided as part of MORA Transport Configuration.

c. Priority Level
    i. The priority level of the MORA Transport Configuration.
    ii. Priority Level shall be an integer greater than 0. The highest priority shall be 1, with larger numbers indicating incrementally lower priority.
    iii. Priority Level may be provided as part of MORA Transport Configuration.
        1. An unspecified priority shall be lower than any possible specified priority.

d. Control Transport Configuration

i. The transport configuration for the socket containing the ML2B control and operations interfaces specified under "RF Layer Command Interface" and "RF Layer Operations Interface" of the given "Component ID" and "Signal Port ID", if provided.
ii. Control Transport Configuration shall be a "Data Transport Configuration" complex type as described in the "VICTORY Data Interface Complex Types" section of the VICTORY Standard Specifications.
iii. Control Transport Configuration shall be provided as part of MORA Transport Configuration.
iv. The Unique Name in the "Data Transport Configuration" shall minimally include the MAC address in the first 17 characters in the restricted string (e.g. 02:C0:ED:12:34:56).
v. The URI field in the "Data Transport Configuration" shall minimally include IPv4/6 address, UDP port and ML2B Unique Identifier (MUI) information in the path (e.g. udp://192.168.0.1:50000/50100). The UDP port and MUI may have the same assigned value.
vi. The optional Network Layer field in the "Data Transport Configuration" shall not be included. If the Network Layer field is included and well formed, it shall be ignored.

e. Signal Data Transport Configuration
i. The transport configuration for the socket containing the ML2B data interface specified under "RF Layer Digital Data Interface" of the given "Component ID" and "Signal Port ID", if provided.
ii. Signal Data Transport Configuration shall be a "Data Transport Configuration" complex type as described in the "VICTORY Data Interface Complex Types" section of the VICTORY Standard Specifications.
iii. Signal Data Transport Configuration shall be provided as part of MORA Transport Configuration for digital signal port "PRODUCER" or "BOTH" role use cases.
iv. Signal Data Transport Configuration shall not be provided as part of MORA Transport Configuration for all analog signal port, digital signal port "CONSUMER" role and all switch group use cases.
v. The Unique Name in the "Data Transport Configuration" shall minimally include the MAC address in the first 17 characters in the restricted string (e.g. 03:C0:ED:00:00:06).
vi. The URI field in the "Data Transport Configuration" shall minimally include IPv4/6 address, UDP port and ML2B Unique Identifier (MUI) information in the path (e.g. multicast://224.0.0.6:50001/50100). The UDP port and MUI may have the same assigned value.
vii. The optional Network Layer field in the "Data Transport Configuration" shall not be included. If the Network Layer field is included and well formed, it shall be ignored.

f. Context Transport Configuration
i. The transport configuration for the socket containing the ML2B context interface specified under "RF Layer Context Interface" of the given "Component ID" and "Signal Port ID", if provided.
ii. Context Transport Configuration shall be a "Data Transport Configuration" complex type as described in the "VICTORY Data Interface Complex Types" section of the VICTORY Standard Specifications.
iii. Context Transport Configuration shall be provided as part of MORA Transport Configuration.
iv. The Unique Name in the "Data Transport Configuration" shall minimally include the MAC address in the first 17 characters in the restricted string (e.g. 03:C0:ED:00:00:06).
v. The URI field in the "Data Transport Configuration" shall minimally include IPv4/6 address, UDP port and ML2B Unique Identifier (MUI) information in the path (e.g. multicast://224.0.0.6:50002/50100). The UDP port and MUI may have the same assigned value.
vi. The optional Network Layer field in the "Data Transport Configuration" shall not be included. If the Network Layer field is included and well formed, it shall be ignored.

28. **Output Level**
a. Minimum 1 dB Compression Point

        i. The minimum setting, stated as 1dB compression point, for an amplifier stage with a variable output level. This parameter represents bias control and is different than gain control.
        ii. Minimum 1 dB Compression Point shall be a real number, greater than -256 and less than 256, in dBm and a resolution of 1/128 dBm (0.0078125 dBm).
        iii. Minimum 1 dB Compression Point shall be provided as part of Output Level.
    b. Maximum 1 dB Compression Point
        i. The maximum setting, stated as 1dB compression point, for an amplifier stage with a variable output level. This parameter is bias control and is different than gain control.
        ii. Maximum 1 dB Compression Point shall be a real number, greater than -256 and less than 256, in dBm and a resolution of 1/128 dBm (0.0078125 dBm).
        iii. Maximum 1 dB Compression Point shall be provided as part of Output Level.
    c. Resolution
        i. The smallest unit of measure for the range of the output level.
        ii. Resolution shall be a real number, greater than or equal to 0 and less than 256, in dB and a resolution of 1/128 dB (0.0078125 dB).
        iii. Resolution shall be provided as part of Output Level.

29. **Platform Configuration Capability**
    a. Key
        i. The platform item.
        ii. Key shall be a restricted string.
        iii. Key shall be provided as part of Platform Configuration Capability.
    b. Values
        i. The valid values associated with the Key.
        ii. Value shall be a list of restricted strings.
        iii. Value shall contain at least one item in its list.
        iv. Value shall be provided as part of Platform Configuration Capability.
30. **Platform Configuration Datum**
    a. Key
        i. The platform item.
        ii. Key shall be a restricted string.
        iii. Key shall be provided as part of Platform Configuration Datum.
    b. Value
        i. The value associated with the Key.
        ii. Value shall be a restricted string.
        iii. Value shall be provided as part of Platform Configuration Datum.
31. **Polarization**
    a. Orientation Angle
        i. The angle of the polarization ellipse's semi-major axis, measured counter-clockwise from the positive horizontal axis.
        ii. Orientation Angle shall be a real number, greater than or equal to 0 and less than or equal to π, in radians.
        iii. Orientation Angle shall be included as part of Polarization.
        iv. NOTE: The Orientation Angle corresponds to the Tilt Angle in the VITA 49.2 Polarization field.
    b. Ellipticity Angle
        i. The angle to describe the polarization ellipse's eccentricity.
        ii. Ellipticity Angle shall be a real number, greater than -π/4 and less than or equal to π/4, in radians.
        iii. Ellipticity Angle shall be included as part of Polarization.
32. **Polygonal Region**
    a. Exclusive
        i. Denotes whether this region is inclusive or exclusive.
        ii. Exclusive shall be a Boolean value where True indicates the region is outside the polygon and False indicates the region is inside the polygon.
        iii. Exclusive shall be provided as part of Polygonal Region.

b. Points
    i. A list of vertex points connected in sequence to create a polygon. The first and last point in the list shall be connected to complete the shape.
    ii. Points shall be a list of "Position" complex types.
    iii. Points shall be a list containing at least two VICTORY "Position" complex types as described in the "Position Complex Types" section of the VICTORY Standard Specifications.
    iv. Points shall be provided as part of Polygonal Region.
    v. If only two points are provided for a Polygon Region, it shall be interpreted as a line connecting the points and used as a valid region.

33. **Port Default Performance Data**
    a. Signal Port ID
        i. The unique identifier of the signal port.
        ii. Signal Port ID shall be a unique integer between 1 and 127, inclusive, that indicates the instance of the given signal port on the MORA device.
        iii. Signal Port ID shall be provided as part of Port Default Performance Data.
    b. Signal Port Performance
        i. The default performance data for the signal port.
        ii. Signal Port Performance shall be a list of "Signal Port Performance Data" complex types as described in "MORA Common Complex Types".
        iii. Signal Port Performance shall contain at least one item in its list.
        iv. Signal Port Performance shall be included as part of Port Default Performance Data.

34. **Radio Frequency Conditioning**
    a. Gain Stages
        i. A list of gain stages associated with an RF conditioning function.
        ii. Gain Stages shall be a list of one or two "Gain Stage" complex types as described in "MORA Common Complex Types".
        iii. Gain Stages may be provided as part of Radio Frequency Conditioning.
    b. Filter Banks
        i. A list of filter banks associated with an RF conditioning function.
        ii. Filter Banks shall be a list of one, two, or three "Filter Bank" complex types as described in "MORA Common Complex Types".
        iii. Filter Banks may be provided as part of Radio Frequency Conditioning.

35. **Reference Connection**
    a. Reference Port ID
        i. The identifier of the reference port for this connection description.
        ii. Reference Port ID shall be an integer between 1 and 127, inclusive.
        iii. Reference Port ID shall be provided as part of Reference Connection.
    b. Signal Port IDs
        i. A list of non-reference signal ports that are associated with the reference port id.
        ii. Signal Port IDs shall contain a list of integers between 1 and 127, inclusive.
        iii. Signal Port IDs shall contain at least one item in its list.
        iv. Signal Port IDs shall be provided as part of Reference Connection.
    c. Association
        i. Describes the relationship between the reference port and the signal port(s).
        ii. Association shall be a restricted string chosen from the following:
            1. CONDUCTED_INJECTION
            2. RADIATED_INJECTION
            3. SELECTABLE_INJECTION
            4. FUNCTIONALLY_DEPENDENT
        iii. Association shall be provided as part of Reference Connection.

36. **Regions**
    a. Circular Regions

        i. A list of circular regional filters.
        ii. Circular Regions shall be a list of "Circular Region" complex types as described in "MORA Common Complex Types" .
        iii. Circular Regions shall contain at least one item in its list.
        iv. Circular Regions may be provided as part of Regions.
    b. Elliptical Regions
        i. A list of elliptical regional filters
        ii. Elliptical Regions shall be a list of "Elliptical Region" complex types as described in "MORA Common Complex Types".
        iii. Elliptical Regions shall contain at least one item in its list.
        iv. Elliptical Regions may be provided as part of Regions.
    c. Polygonal Regions
        i. A list of polygonal regional filters.
        ii. Polygonal Regions shall be a list of "Polygonal Region" complex types as described in "MORA Common Complex Types".
        iii. Polygonal Regions shall contain at least one item in its list.
        iv. Polygonal Regions may be provided as part of Regions.

37. **Relative Cartesian Coordinates**
    a. X
        i. The position, relative to platform center, along the x-axis, oriented in a right-hand configuration.
        ii. The positive x-axis shall point forward down the centerline of the platform.
        iii. X shall be a real number (64-bit) in meters.
        iv. X shall be provided as part of Relative Cartesian Coordinates.
    b. Y
        i. The position, relative to platform center, along the y-axis, oriented in a right-hand configuration.
        ii. The positive y-axis shall point 90° left of forward.
        iii. Y shall be a real number (64-bit) in meters.
        iv. Y shall be provided as part of Relative Cartesian Coordinates.
    c. Z
        i. The position, relative to platform center, along the z-axis, oriented in a right-hand configuration.
        ii. The positive z-axis shall be orthogonal to the x-axis and y-axis and shall point upward from the platform.
        iii. Z shall be a real number (64-bit) in meters.
        iv. Z shall be provided as part of Relative Cartesian Coordinates.

38. **Reservation Confirmation**
    a. ID
        i. The ID of the reserved resource (i.e., signal port or switch group).
        ii. The ID shall be an integer between 1 and 127, inclusive.
        iii. The ID shall be provided as a part of Reservation Confirmation.
    b. Confirmation Number
        i. A unique number provided upon a reservation action.
        ii. Confirmation Number shall be an integer unique within an operating session.
        iii. Confirmation Number shall be provided as part of Reservation Confirmation.
        iv. NOTE: The Confirmation Number should be randomly generated to prevent unauthorized releases.

39. **RF Field of View**
    a. Azimuth Range
        i. The usable azimuth range of the available aperture(s).
        ii. Azimuth Range shall be an "Azimuth Range" complex type as described in "MORA Common Complex Types".

iii. Azimuth Range shall be included as part of RF Field of View

b. Elevation Range
   i. The usable elevation range of the available aperture(s).
   ii. Elevation Range shall be an "Elevation Range" complex type as described in "MORA Common Complex Types".
   iii. Elevation Range may be included as part of RF Field of View

40. **RF Power Range**
    a. Min Power
       i. The minimum power for the RF Power Range.
       ii. Min Power shall be a real number in dBm.
       iii. Min Power shall be provided as part of RF Power Range.
    b. Max Power
       i. The maximum power for the RF Power Range.
       ii. Max Power shall be a real number in dBm.
       iii. Max Power shall be greater than Min Power.
       iv. Max Power may be provided as part of RF Power Range.
41. **Sample Bandwidth and Sample Rate**
    a. Sample Bandwidth
       i. The bandwidth supported for digital RF data.
       ii. Bandwidth shall be a real number (64-bit), greater than 0 and less than 8.79 terahertz, in Hz and a fractional resolution of 0.95 microhertz.
       iii. Bandwidth shall be provided as part of Sample Bandwidth and Sample Rate.
    b. Sample Rate
       i. The sample rate supported for digital RF data.
       ii. Sample Rate shall be a real number (64-bit), greater than 0 and less than 8,790,000,000,000, in samples per second and a fractional resolution of 0.00000095 samples per second.
       iii. Sample Rate shall be provided as part of Sample Bandwidth and Sample Rate.
42. **Scale**
    a. Min Value
       i. The minimum value for the scale.
       ii. Min Value shall be an integer.
       iii. Min Value shall be provided as part of Scale.
    b. Max Value
       i. The maximum value for the scale.
       ii. Max Value shall be an integer.
       iii. Max Value shall be greater than Min Value.
       iv. Max Value shall be provided as part of Scale.
43. **Signal Data Attributes**
    a. Data Format
       i. Describes the type of digital RF data that is required.
       ii. Data Format shall be a restricted string chosen from the following:
          1. REAL
          2. IQ
          3. EITHER
       iii. Data Format shall be provided as part of Signal Data Attributes.
    b. Data Domain
       i. Describes which domain the resource supports.
       ii. Data Domain shall be a restricted string chosen from the following:
          1. TIME
             a. Time domain
          2. FREQ
             a. Frequency domain
          3. TIME_AND_FREQ
             a. Time and frequency domain

iii. Data Domain shall be provided as part of Signal Data Attributes.

44. **Signal Domain Conversion**
    a. Signal Port Signal Domain Conversion Description
        i. The signal domain conversion function description for the signal port.
        ii. Signal Port Signal Domain Conversion Description shall be a "Signal Domain Conversion Description" complex type as described in "MORA Common Complex Types".
        iii. Signal Port Signal Domain Conversion Description shall be provided as part of Signal Domain Conversion.
    b. Sub Port Signal Domain Conversion Descriptions
        i. The signal domain conversion function description for sub ports.
        ii. Sub Port Signal Domain Conversion Descriptions shall be a list of "Signal Domain Conversion Description" complex types as described in "MORA Common Complex Types".
        iii. Sub Port Signal Domain Conversion Descriptions shall contain at least one item in its list.
        iv. Sub Port Signal Domain Conversion Descriptions may be provided as part of Signal Domain Conversion.
45. **Signal Domain Conversion Description**
    a. ID
        i. Port or sub port identifier relative to the Signal Domain Conversion Description.
        ii. ID shall be an integer between:
            1. 1 and 127, inclusive, when representing a Port ID
            2. 1 and 65,535, inclusive, when representing a Sub Port ID
        iii. ID shall be provided as part of Signal Domain Conversion Description.
    b. Signal Direction
        i. The direction of the signal.
        ii. Signal Direction shall be a restricted string chosen from the following:
            1. TX
            2. RX
            3. TOR
        iii. Signal Direction shall be provided as part of Signal Domain Conversion Description.
    c. Sample Format
        i. The data format of the sample.
        ii. Sample Format shall be a "Signal Data Attributes" complex type as described in "MORA Common Complex Types".
        iii. Sample Format shall be provided as part of Signal Domain Conversion Description.
    d. Sample Sizes
        i. The sample sizes supported for the digital RF data.
        ii. Sample Sizes shall be a list of integers with values between 1 and 64, inclusive, reflecting the bit size.
        iii. Sample Sizes shall contain at least one item in its list.
        iv. Sample Sizes shall be provided as part of Signal Domain Conversion Description.
        v. For complex formatted samples, the sample size shall consist of both the I and Q components.
        vi. NOTE: 16 bit I and Q would be stated as 32 bits for sample size.
    e. Sample Bandwidths and Sample Rates
        i. The sample bandwidths and sample rates supported for the digital RF data.
        ii. Sample Bandwidths and Sample Rates shall be a list of "Sample Bandwidth and Sample Rate" complex types as described in "MORA Common Complex Types".
        iii. Sample Bandwidths and Sample Rates shall contain at least one item in its list.
        iv. Sample Bandwidths and Sample Rates shall be provided as part of Signal Domain Conversion Description.
    f. TX Buffer Size
        i. The size of the transmission buffer.
        ii. TX Buffer Size shall be an integer (64-bit), greater than or equal to 0, in bytes.

iii. TX Buffer Size shall be provided as part of Signal Domain Conversion Description.
iv. For DRX signal ports, this value shall be set to 0.

g. RX Buffer Size
    i. The size of the receive buffer
    ii. RX Buffer Size shall be an integer (64-bit), greater than or equal to 0, in bytes.
    iii. RX Buffer Size shall be provided as part of Signal Domain Conversion Description.
    iv. For DTX signal ports, this value shall be set to 0.

46. **Signal Port**
    a. ID
        i. The unique identifier of the signal port.
        ii. ID shall be a unique integer between 1 and 127, inclusive, that indicates the instance of the given signal port on the MORA device.
        iii. ID shall be provided as part of Signal Port.
    b. Type
        i. The type of signal port.
        ii. Type shall be a restricted string chosen from one of the following values:
            1. ARX
                a. Analog Receive Port
            2. ATX
                a. Analog Transmit Port
            3. ATR
                a. Analog Transmit and/or Receive Port
            4. DRX
                a. Digital Receive Port
            5. DTX
                a. Digital Transmit Port
            6. DTR
                a. Digital Transmit and/or Receive Port
            7. ARI
                a. Analog Reference Input
            8. ARO
                a. Analog Reference Output
            9. DRI
                a. Digital Reference Input
            10. DRO
                a. Digital Reference Output
        iii. Type shall be provided as part of Signal Port.
    c. Sub Type
        i. The sub type of the signal port
        ii. Sub Type shall be a restricted string chosen from one of the following:
            1. RSC
                a. RF Single-Channel
            2. ISC
                a. IF Single-Channel
            3. BSC
                a. Baseband Single-Channel
            4. RMC
                a. RF Multi-Channel
            5. IMC
                a. IF Multi-Channel
            6. BMC
                a. Baseband Multi-Channel

7. RFS
    a. RF Sample
8. IFS
    a. IF Sample
9. BBS
    a. Baseband Sample
10. OSC
    a. Sinusoidal Oscillator
11. CLK
    a. Reference Clock

iii. Sub Type shall be provided as part of Signal Port.

d. Role
    i. The signal role of the signal port.
    ii. Role shall be a restricted string chosen from one of the following:
        1. PRODUCER
            a. The signal port shall emit a signal and associated context, when applicable.
            b. Shall be a valid selection for ARO, ARX, ATX, DRO, DRX, and DTX signal port types.
        2. CONSUMER
            a. The signal port shall ingest a signal and associated context, when applicable.
            b. Shall be a valid selection for ARI, ARX, ATX, DRI, DRX, and DTX signal port types.
        3. BOTH
            a. The signal port shall both emit and ingest a signal and associated context, if applicable.
            b. Shall be a valid selection for ATR and DTR signal port types.
    iii. Role shall be provided as part of Signal Port.

e. RX Delay
    i. The RF path delay for the signal port.
    ii. RX Delay shall be an integer (64-bit) in femtoseconds.
    iii. RX Delay may be provided as part of Signal Port (for ports with receive functionality, RX Delay shall be provided as part of Signal Port).
    iv. NOTE: The total RX Delay is characterized from the antenna phase center to the ADC in a default state (at full gain and with selectable filters set to bypass). This characterization may involve a single device/port or multiple devices/ports connected in series. Individual receive ports declare (Signal Port complex type) their contribution in a default state towards the total receive delay. Individual receive ports will also declare (Signal Port Description and Switch State complex types) delay deltas associated with controllable attributes (e.g., filter selections, switch state selections). Additionally, all receive-chain devices will declare (External Connection complex type) the contribution of external coaxial cables as part of the total receive delay.

f. TX Delay
    i. The delay from the DAC to an exterior connection at full gain and with selectable filters set to bypass.
    ii. TX Delay shall be an integer (64-bit) in femtoseconds.
    iii. TX Delay may be provided as part of Signal Port (for ports with transmit functionality, TX Delay shall be provided as part of Signal Port).
    iv. NOTE: The total TX Delay is characterized from the DAC to the antenna phase center in a default state (at full gain and with selectable filters set to bypass). This characterization may involve a single device/port or multiple devices/ports connected in series. Individual transmit ports declare (Signal Port Description and Switch State complex types) their contribution in a default state towards the total transmit delay. Individual transmit ports will also declare (Signal

Port Description complex type) delay deltas associated with controllable attributes (e.g., filter selections, switch state selections). Additionally, all transmit-chain devices will declare (External Connection complex type) the contribution of external coaxial cables as part of the total transmit delay.

g. Min Power
    i. The minimum power for normal operation.
    ii. Min Power shall be an integer in dBm.
    iii. Min Power may be provided as part of Signal Port.
h. Min Voltage
    i. The minimum voltage for normal operation.
    ii. Min Voltage shall be an integer in volts.
    iii. Min Voltage may be provided as part of Signal Port.
i. Max Power
    i. The maximum power for operation without damage.
    ii. Max Power shall be an integer in dBm.
    iii. Max Power may be provided as part of Signal Port.
j. Max Voltage
    i. The maximum voltage for operation without damage.
    ii. Max Voltage shall be an integer in volts.
    iii. Max Voltage may be provided as part of Signal Port.
k. RX Frequency Range
    i. The overall receive frequency range of the signal port.
    ii. RX Frequency Range shall be a "Frequency Range" complex type as described in the section "MORA Common Complex Types".
    iii. RX Frequency Range may be provided as part of Signal Port (for ports with receive functionality, RX Frequency Range shall be provided as part of Signal Port).
l. TX Frequency Range
    i. The overall transmit frequency range of the signal port.
    ii. TX Frequency Range shall be a "Frequency Range" complex type as described in the section "MORA Common Complex Types".
    iii. TX Frequency Range may be provided as part of Signal Port (for ports with transmit functionality, TX Frequency Range shall be provided as part of Signal Port).
m. Antenna Resources
    i. The antenna resources available through the signal port.
    ii. Antenna Resources shall be a list of restricted strings in the format 'xxEyyyyy' where 'xx' represents the Antenna Array ID and 'yyyyy' represents the Array Element ID consistent with the MDM Type 1 REF ID field.
    iii. Antenna Resources shall contain at least one item in its list.
    iv. Antenna Resources may be provided as part of Signal Port.
n. MORA Transport Configuration
    i. The transport configuration for this signal port.
    ii. MORA Transport Configuration shall be a "MORA Transport Configuration" complex type as described in the section "MORA Common Complex Types".
    iii. MORA Transport Configuration shall be provided as part of Signal Port.
o. Test Source
    i. The test sources available through the signal port.
    ii. Test Source shall be a "Test Source" complex type as described in the section "MORA Common Complex Types".
    iii. Test Source may be provided as part of Signal Port.
p. Required Control Fields
    i. A list of integers representing the minimum set of MDM Type 1 control fields required to be provided by a client for a signal port to begin streaming signal data and context.

ii. Required Control Fields shall be a list of integers between 1 and 131 inclusive.
    1. The integer range of 1-31 shall map to the applicable CIF0 bit fields as regulated in Table 71.
    2. The integer range of 101-131 shall map to the applicable CIF1 bit fields as regulated in Table 71.
iii. Required Control Fields may be an empty list.
iv. Required Control Fields shall be provided as part of Signal Port.

47. **Signal Port Description**
    a. Signal Port ID
        i. The identifier of the signal port this reservation is associated with.
        ii. Signal Port ID shall be a unique integer between 1 and 127, inclusive.
        iii. Signal Port ID shall be provided as part of Signal Port Description.
    b. RF Conditioning
        i. Radio frequency conditioning function description for a signal port.
        ii. RF Conditioning shall be a "Radio Frequency Conditioning" complex type as described in the section "MORA Common Complex Types".
        iii. RF Conditioning may be provided as part of Signal Port Description.
    c. RF Translation
        i. Radio frequency translation functional description for a signal port.
        ii. RF Translation shall be a "Frequency Translation" complex type as described in the section "MORA Common Complex Types".
        iii. RF Translation may be provided as part of Signal Port Description.
    d. Signal Domain Conversion
        i. Signal domain conversion functions for a signal port.
        ii. Signal Domain Conversion shall be a "Signal Domain Conversion" complex type as described in the section "MORA Common Complex Types".
        iii. Signal Domain Conversion may be provided as part of Signal Port Description.
    e. Sub Ports
        i. List of sub ports associated with this signal port.
        ii. Sub Ports shall be a list of "Sub Port" complex types as described in the section "MORA Common Complex Types".
        iii. Sub Ports shall contain at least one and no more than 65,535 items in its list.
        iv. Sub Ports may be provided as part of Signal Port Description.

48. **Signal Port Performance Data**
    a. Signal Direction
        i. The direction of the signal.
        ii. Signal Direction shall be a restricted string chosen from the following:
            1. RX
            2. TX
        iii. Signal Direction shall be provided as part of Signal Port Performance Data.
    b. Frequency
        i. The frequency value associated with the rest of the data in Signal Port Performance Data.
        ii. Frequency shall be a real number (64-bit), greater than 0, in Hz.
        iii. Frequency shall be provided as part of Signal Port Performance Data.
    c. Gain
        i. The gain value at this frequency value.
        ii. Gain shall be a real number in dB.
        iii. Gain shall be provided as part of Signal Port Performance Data.
    d. Noise Figure
        i. The noise figure at this frequency value.
        ii. Noise Figure shall be a real number in dB.
        iii. Noise figure shall be provided as part of Signal Port Performance Data.

e. Input Second Order Intercept Point
    i. The input power level, at this frequency, when the second order intermodulation product would exhibit the same level as the fundamental signal at the output.
    ii. Input Second Order Intercept Point shall be a real number in dBm.
    iii. Input Second Order Intercept Point may be provided as part of Signal Port Performance Data.
f. Input Third Order Intercept Point
    i. The input power level, at this frequency, when the third order intermodulation product would exhibit the same level as the fundamental signal at the output.
    ii. Input Third Order Intercept Point shall be a real number in dBm.
    iii. Input Third Order Intercept Point may be provided as part of Signal Port Performance Data.
g. Input 1dB Compression Point
    i. The input power level, at this frequency, when an increase of input power by 2 dB yields a non-linear increase in output power of 1 dB.
    ii. Input 1dB Compression Point shall be a real number in dBm.
    iii. Input 1dB Compression Point may be provided as part of Signal Port Performance Data.
h. Power Saturation
    i. The power saturation output at this frequency value.
    ii. Power Saturation shall be a real number in dBm.
    iii. Power Saturation may be provided as part of Signal Port Performance Data.
i. Signal Related Spurious
    i. The signal related spurious at this frequency value.
    ii. Signal Related Spurious shall be a real number in dBc.
    iii. Signal Related Spurious may be provided as part of Signal Port Performance Data.
j. Internally Generated Spurious
    i. The internally generated spurious at this frequency value.
    ii. Internally Generated Spurious shall be a real number in dBm.
    iii. Internally Generated Spurious may be provided as part of Signal Port Performance Data.

49. **Signal Port Reservation**
    a. Signal Port ID
        i. The identifier of the signal port this reservation is associated with.
        ii. Signal Port ID shall be an integer between 1 and 127, inclusive.
        iii. Signal Port ID shall be provided as part of Signal Port Reservation.
    b. Client Component IDs
        i. A list of the Client Component IDs authorized to use the signal port.
        ii. Client Component IDs shall be a list of "Component ID" that corresponds to "MORA Transport Configuration" complex type as described in "MORA Common Complex Types".
        iii. Client Component IDs shall contain at least one item in its list.
        iv. Client Component IDs shall be provided as part of Signal Port Reservation.
50. **Signal Strength**
    a. Power
        i. The absolute power level of the signal of interest.
        ii. Power shall be a real number in dBm.
        iii. Power may be provided as part of Signal Strength.
    b. SNR
        i. The signal to noise ratio of the signal of interest and the noise floor.
        ii. SNR shall be a real number in dB.
        iii. SNR may be provided as part of Signal Strength.
51. **Signal to Noise Ratio Range**
    a. Min SNR
        i. The minimum signal to noise ratio for the Signal to Noise Ratio Range.
        ii. Min SNR shall be a real number in dB.
        iii. Min SNR shall be provided as part of Signal to Noise Ratio Range.
    b. Max SNR

        i. The maximum signal to noise ratio for the Signal to Noise Ratio Range.
        ii. Max SNR shall be a real number in dB.
        iii. Max SNR shall be greater than Min SNR.
        iv. Max SNR may be provided as part of Signal to Noise Ratio Range.

52. **Sub Port**
    a. ID
        i. A unique identifier for a sub port within the scope of a signal port.
        ii. ID shall be an integer between 1 and 65,535, inclusive.
        iii. ID shall be provided as part of Sub Port.
    b. Type
        i. The type of sub port.
        ii. Type shall be a restricted string chosen from the following:
            1. DDC
                a. Digital Down Converter
            2. DUC
                a. Digital Up Converter
            3. NCH
                a. N-Channel
        iii. Type shall be provided as part of Sub Port.
    c. Channel Coherency
        i. Channel coherency for the sub port.
        ii. Channel Coherency shall be a restricted string chosen from the following:
            1. PHASE_COHERENT
            2. LO_COHERENT
        iii. Channel Coherency shall be provided as part of Sub Port.
    d. Required Control Fields
        i. A list of integers representing the minimum set of MDM Type 1 control fields required to be provided, in addition to the signal port control fields, by a client for a sub port to begin streaming signal data and context.
        ii. Required Control Fields shall be a list of integers between 1 and 130 inclusive.
            1. The integer range of 1-31 shall map to the applicable CIF0 bit fields as regulated in Table 71.
            2. The integer range of 101-130 shall map to the applicable CIF1 bit fields as regulated in Table 71.
        iii. Required Control Fields may be an empty list.
        iv. Required Control Fields shall be provided as part of Sub Port.

53. **Sub Port Frequency Translation**
    a. Sub Port ID
        i. The sub port identifier to which the frequency translation description applies.
        ii. Sub Port ID shall be an integer between 1 and 65,535, inclusive.
        iii. Sub Port ID shall be provided as part of Sub Port Frequency Translation.
    b. Sub Tuning Range
        i. Frequency range of the sub tuner.
        ii. Sub Tuning Range shall be a "Frequency Range" complex type as described in "MORA Common Complex Types".
        iii. Sub Tuning Range shall be provided as part of Sub Port Frequency Translation.

54. **Supporting Data File**
    a. File Format
        i. The format of the supporting data file.
        ii. File Format shall be a restricted string chosen from the following
            1. AMM_CAL
                a. Aperture Manifold Management Calibration File
            2. AMM_COMP

a. Aperture Manifold Management Compensation File
3. OTHER
a. Other calibration or compensation file format
iii. File Format shall be provided as part of Supporting Data File.

b. File
i. Contains the file's identification information.
ii. File shall be a "MORA File" complex type as described in "MORA Common Complex Types".
iii. File shall not contain the optional field, "Content", in the "MORA File" complex type.
iv. File shall be provided as part of Supporting Data File.

55. **Task Status**
a. Tracking Number
i. A unique identifier for a task within the scope of a processing resource.
ii. Tracking Number shall be an integer greater than 0.
iii. Tracking Number shall be provided as part of Task Status.

b. Status
i. That status of the task corresponding to the tracking number.
ii. Status shall be a restricted string chosen from the following:
1. WAITING_TO_START
2. IN_PROGRESS
3. PAUSED
4. COMPLETED
5. CANCELED
6. FAULTED
iii. Status shall be provided as part of Task Status.

56. **Test Source**
a. Frequency Range
i. The operating frequency range and resolution of the test source.
ii. Frequency Range shall be a "Frequency Range" complex type as described in "MORA Common Complex Types".
iii. Frequency Range shall be provided as part of Test Source

b. Injected Power Range
i. The operating power range and resolution of the test source at the point of injection.
ii. Injected Power Range shall be an "Injected Power Range" complex type as described in "MORA Common Complex Types".
iii. Injected Power Range shall be provided as part of Test Source

c. Test Source Waveforms
i. The available waveforms for test source operation.
ii. Test Source Waveforms shall be a list of unique integers from 0 to 63 inclusive associated with the available waveforms.
iii. Test Source Waveforms shall contain at least one and no more than 64 items in its list.
iv. Test Source Waveforms shall be provided as part of Test Source.
v. *NOTE: At this time, an unmodulated continuous wave signal has been defined as waveform number 0.*

57. **Threshold**
a. RF Power Range
i. The range in acceptable absolute power levels for signal data qualification.
ii. RF Power Range shall be a "RF Power Range" complex type as described in "MORA Common Complex Types".
iii. RF Power Range may be provided as part of Threshold.

b. Signal to Noise Ratio Range
i. The acceptable signal to noise range for signal data qualification.
ii. Signal to Noise Ratio Range shall be a "Signal to Noise Ratio Range" complex type as described in "MORA Common Complex Types".
iii. Signal to Noise Ratio Range may be provided as part of Threshold.

58. **Timing**
    a. Start Timing
        i. Specifies the start time of the task.
        ii. Start Timing shall be a VICTORY formatted string as described in the "Timestamp Format for Application Layer Data" section of the VICTORY Standard Specifications.
        iii. Start Timing may be provided as part of Timing.
        iv. Timing messages received without Start Timing specified shall be processed as soon as possible.
        v. Timing messages received with a Start Timing in the past shall result in an error message and shall not be processed.
    b. Repetitions
        i. Defined as the number (N) of times the task shall be successfully completed.
        ii. Repetitions shall be an integer value greater than 0.
        iii. Repetitions may be provided as part of the Timing.
        iv. If number of repetitions is not provided, the task shall be performed once.
        v. NOTE: The completion of one repetition of a task (e.g. DF Scan) may produce multiple output (i.e. LOB) messages and therefore the number of output messages may far exceed N.
    c. Interval
        i. The time between the start of each signal data collection/transmission.
        ii. Interval shall be a real number greater than 0 in microseconds.
        iii. Interval may be provided as part of the Timing.
        iv. NOTE: The interval includes the dwell time.
    d. Dwell
        i. The amount of time for a signal data collection/transmission.
        ii. Dwell shall be a real number greater than 0 in microseconds.
        iii. Dwell time may be provided as part of Timing.

5.3.5.2 Waveform Complex Types <49017-20200707, Pro>

The following is a list of "Waveform Complex Types" that are referenced by the MORA specifications. Implementations shall be in accordance with the following sections.

Due to the natural interdependency on messaging over the VDB and ML2B, it is important that values which may need to be represented in a binary format (on the ML2B) be constrained accordingly. All "integer" values shall be 32-bit integers, unless otherwise specified, and all "real numbers" shall be 32-bit floating point numbers, unless specified otherwise. There are instances where some values require a larger range; these values shall be specified as 64-bit integers (long) or 64-bit floating point numbers (double) where necessary.

The terms "restricted string" and "restricted URI" are described in VICTORY sections titled "String Bounds" and "URI Bounds" under "VICTORY Data Types". String enumerations further restrict the String Bounds to the predefined list of values.

1. **Waveform**
    a. ID
        i. A unique identifier for the waveform application instance for a specific MORA Device.
        ii. ID shall be an integer greater than 0.
        iii. ID shall be provided as part of Waveform.
    b. Description
        i. The description of the waveform application.
        ii. Description shall be a restricted string.
        iii. Description shall be provided as part of Waveform.
    c. RF Function
        i. The RF functional operation of the Waveform.
        ii. RF Function shall be a restricted string chosen from the following:

1. RXO
2. TXO
3. TOR
4. TAR

iii. RF Function shall be provided as part of Waveform.

d. Frequency Range
   i. The operating frequency range and resolution of the waveform application instance.
   ii. Frequency Range shall be a "Frequency Range" complex type as described in "MORA Common Complex Types".
   iii. Frequency Range shall be provided as part of Waveform.

e. Associated Signal Ports
   i. The signal port identifier(s) within the device associated with the waveform application instance.
   ii. Associated Signal Ports shall be a list of "ID" that corresponds to the "Signal Port" complex type as described in "MORA Common Complex Types".
   iii. Associated Signal Ports shall contain at least one and no more than 127 items in its list.
   iv. Associated Signal Ports shall be included as part of Waveform.

2. Waveform Operation

a. ID
   i. A unique identifier of the waveform operation for a specific MORA Device.
   ii. ID shall be an integer greater than 0.
   iii. ID shall be provided as part of Waveform Operation.
   iv. Every valid Waveform Operation case for a specific device shall be enumerated with a unique ID, including single waveform operations and multi-waveform combinations.

b. MORA Configuration IDs
   i. A list of MORA Configuration IDs that support the waveform operation.
   ii. MORA Configuration IDs shall be a list of "ID" that corresponds to the "MORA Configuration" complex type as described in "MORA Common Complex Types".
   iii. MORA Configuration IDs shall contain at least one item in its list.
   iv. MORA Configuration IDs shall be included as part of Waveform Operation.

c. Waveform IDs
   i. A list of the waveform identifier(s) that are executed during the waveform operation.
   ii. Waveform IDs shall be a list of "ID" that corresponds to the "Waveform" complex type, as described in "Waveform Complex Types".
   iii. Waveform IDs shall contain at least one item in its list.
   iv. Waveform IDs shall be provided as part of Waveform Operation.

5.3.5.3 Radio Frequency Distribution Complex Types <49018-20200707, Pro>

The following is a list of "Radio Frequency Distribution Complex Types" that are referenced by the MORA specifications. Implementations shall be in accordance with the following sections.

Due to the natural interdependency on messaging over the VDB and ML2B, it is important that values which may need to be represented in a binary format (on the ML2B) be constrained accordingly. All "integer" values shall be 32-bit integers, unless otherwise specified, and all "real numbers" shall be 32-bit floating point numbers, unless specified otherwise. There are instances where some values require a larger range; these values shall be specified as 64-bit integers (long) or 64-bit floating point numbers (double) where necessary.

The terms "restricted string" and "restricted URI" are described in VICTORY sections titled "String Bounds" and "URI Bounds" under "VICTORY Data Types". String enumerations further restrict the String Bounds to the predefined list of values.

1. **Switch Group**
    a. ID
        i. The unique identifier for the switch group.
        ii. ID shall be an integer between 1 and 127, inclusive, in accordance with enumeration as described in "Discrete I/O 64-Bit (CIF 1/Bit 5)".
        iii. ID shall be provided as part of Switch Group.
    b. Switch States
        i. Switch states is a list of states for the switch group.
        ii. Switch States shall be a list of "Switch State" complex types as described in "Radio Frequency Distribution Complex Types".
        iii. Switch States shall contain at least two and no more than 8,191 items in its list.
        iv. Switch States shall be provided as part of Switch Group.
    c. Control Transport Configuration
        i. The transport configuration for the socket containing the ML2B control and operations interfaces specified under "RF Layer Command Interface" and "RF Layer Operations Interface" of the given switch group.
        ii. Control Transport Configuration shall be a "Data Transport Configuration" complex type as described in the "VICTORY Data Interface Complex Types" section of the VICTORY Standard Specifications.
        iii. Control Transport Configuration shall be provided as part of Switch Group.
        iv. The URI field in the "Data Transport Configuration" shall minimally include IPv4/6 address and port information.
    d. Context Transport Configuration
        i. The transport configuration for the socket containing the ML2B context interface specified under "RF Layer Context Interface" of the given switch group.
        ii. Context Transport Configuration shall be a "Data Transport Configuration" complex type as described in the "VICTORY Data Interface Complex Types" section of the VICTORY Standard Specifications.
        iii. Context Transport Configuration shall be provided as part of Switch Group.
        iv. The URI field in the "Data Transport Configuration" shall minimally include IPv4/6 address and port information.
2. **Switch Group Reservation**
    a. Switch Group ID
        i. The identifier of the switch group this reservation is associated with.
        ii. Switch Group ID shall be an integer between 1 and 127, inclusive.
        iii. Switch Group ID shall be provided as part of Switch Group Reservation.
    b. Client Component IDs
        i. A list of the Client Component IDs authorized to use the switch group.
        ii. Client Component IDs shall be a list of "Component ID" that corresponds to "MORA Transport Configuration" complex type as described in "MORA Common Complex Types".
        iii. Client Component IDs shall contain at least one item in its list.
        iv. Client Component IDs shall be provided as part of Switch Group Reservation.
3. **Switch State**
    a. ID
        i. The unique identifier of a switch state within the scope of a switch group.
        ii. ID shall be an integer between 1 and 8,191, inclusive.
        iii. ID shall be provided as part of Switch State.
    b. Connections
        i. A list of connections that define the switch state.
        ii. Connections shall be a list of "Connection" complex types as described in "MORA Common Complex Types".
        iii. Connections shall contain at least one item in its list.

iv. Connections shall be provided as part of Switch State.

5.4 Syslog Protocol Data Parameters for MORA <49101-20200707, Pro>

In addition to those specified in the "Syslog Protocol Data Parameters" section of the VICTORY Standard Specifications, MORA shall include a new structured data element (SD-ELEMENT) to allow for important status information to be efficiently distributed through the network and to be recorded. Per the Syslog specification, an SD-ELEMENT consists of a name and parameters (i.e., name-value pairs). The name is referred to as SD-ID. The name-value pairs are referred to as SD-PARAMs. A description of the SD-ELEMENT for MORA is shown as follows.

1. SD-ID
    a. This parameter indicates the unique structured data identifier (SD-ID) for MORA-specific Syslog parameters.
    b. The format of this parameter shall be moraDevice@<private enterprise number>
    c. The Internet Assigned Numbers Authority (IANA)-registered private enterprise number reserved for VICTORY is 41192.
    d. The SD-ID parameter shall be included in a Syslog message for both faults and statuses.

2. SD-PARAM
    a. This parameter indicates the name-value pairs used for the MORA-specific Syslog parameters.
    b. MORA specifies the following additional structured data parameters (SD-PARAMs) inside the Syslog messages:

        i deviceState
            1. The current state of the MORA Device.
            2. The current deviceState parameter shall be a restricted string chosen from one of the following values:
                a. OPERATIONAL
                b. STANDBY
                    i. Application is halted
                c. TRANSMIT_INHIBIT
                    i. Application is active but not transmitting
                d. FAULT
                e. ZEROIZED
                f. MAINTENANCE_MODE
                g. SANITIZED
            3. Example: deviceState = "STANDBY"
            4. The deviceState parameter shall correlate with the "State" corresponding to the "Device Status" complex type as described in "MORA Common Complex Types".
            5. The deviceState parameter shall be included in Syslog messages for faults and statuses representing a MORA Device component type.

        ii waveform
            1. The description of a waveform that is currently running on the MORA Device.
                a. Example: waveform="RADIOAPP"
            2. Multiple waveforms shall be added as separate parameters.
                a. Example: waveform="RADIOAPP" waveform="EWAPP"
            3. A detailed description of the waveform reflected in the "Description" corresponding to the "Waveform" complex type as described in "Waveform Complex Types".

4. The waveform parameter shall be included in Syslog messages for statuses representing MORA Device component types that implement the Waveform Management Parameters.
5. The waveform parameter shall not be included in Syslog messages for faults.

iii SPM_errors

1. Cumulative total of errors experienced from the MORA Signal Port Manager component type within the current operating session.
    a. Example: SPM_errors="10"
2. The SPM_errors parameter shall be an integer value greater than or equal to zero and less than or equal to 4,294,967,295.
3. When the SPM_errors parameter reaches its maximum value, it shall roll over to its minimum value.
4. The SPM_errors parameter shall be included in a Syslog message for faults and statuses when a MORA Signal Port Manager component type is present.

iv SPM_out_of_sequence

1. Cumulative total of out of sequence events received from the MORA Signal Port Manager component type within the current operating session.
    a. Example: SPM_out_of_sequence="1"
2. The SPM_out_of_sequence parameter shall be an integer value greater than or equal to zero and less than or equal to 4,294,967,295.
3. When the SPM_out_of_sequence parameter reaches its maximum value, it shall roll over to its minimum value.
4. The SPM_out_of_sequence parameter shall be included in a Syslog message for faults and statuses when a MORA Signal Port Manager component type is present.

v SPM_ACKs

1. Cumulative total of acknowledgements received from the MORA Signal Port Manager component type within the current operating session. This total includes SPM_out_of_sequence events.
    a. Example: SPM_ACKs="1000"
2. The SPM_ACKs parameter shall be an integer value greater than or equal to zero and less than or equal to 4,294,967,295.
3. When the SPM_ACKs parameter reaches its maximum value, it shall roll over to its minimum value.
4. The SPM_ACKs parameter shall be included in a Syslog message for faults and statuses when a MORA Signal Port Manager component type is present.

5.5 Version Information Management Parameters for MORA <49102-20210301, Pro>

This MORA specification shall extend the VICTORY Common Management Interface Specification's "Version Information Management Parameters" section of the VICTORY Standard Specifications to formally name MORA Component Types, Management Interface Types, and SOAP Component Types.

Table 24 below shall be an extension of the "VICTORY Management Interface Types" specification that notes the MORA specific Component Types.

Table 24 MORA Management Interface Types

MORA Component Type	Management Interface Type	Version Applicability
		MORA V2.4
MORA Device	MORA_DEVICE	X
MORA Signal Resource Manager	MORA_SIGNAL_RESOURCE_MANAGER	X

Table 25 below shall be an extension of the "VICTORY SOAP Component Types" specification that notes the MORA specific SOAP Component Types.

Table 25 MORA SOAP Component Types

Management Interface Type	SOAP Component Type	Version Applicability	
		VICTORY V1.9	MORA V2.4
MORA_DEVICE	MORA_DEVICE		X
	WAVEFORM		X
	DEVICE_INFORMATION	X	
	GENERIC_END_NODE	X	
	VERSION_INFORMATION	X	
	HEALTH_PUBLISHING	X	
	AA_ENTRYPOINTS	X	
	AUTHN_ENTRYPOINTS	X	
MORA_SIGNAL_RESOURCE_MANAGER	MORA_SIGNAL_RESOURCE		X
	RADIO_FREQUENCY_DISTRIBUTION		X
	VERSION_INFORMATION	X	
	HEALTH_PUBLISHING	X	
	AA_ENTRYPOINTS	X	
	AUTHN_ENTRYPOINTS	X	

5.6 MORA Schemas and WSDLs <49103-20201002, Pro>

This MORA specification shall extend the "VICTORY Schemas and WSDLs" section of the VICTORY Standard Specifications that notes the MORA Schemas and WSDLs. The appendix titled "APPENDIX C: MORA SCHEMAS" provides the formal names of the MORA and VICTORY schema files used in a MORA implementation. The WSDL files for MORA and VICTORY are listed in the appendix titled "APPENDIX B: MORA WSDLS" for use in MORA implementations.

6 MORA DATA MESSAGING

The MORA Data Message (MDM) specifications define the protocol and formats for the messaging interfaces between resources that utilize the ML2B. MDMs are analogous to the ML2B as VICTORY Data Messages (VDMs) are to the VDB. The messaging protocol is described in section "MDM Protocol Specifications <MT96001-V2.4>". There are seven (7) MDM message types. Each of these message types are described in section "MDM Types".

6.1 MDM Protocol Specifications <MT96001-V2.4>

The MDM protocol specifications shall be in accordance with Table 26 below.

Table 26 MDM Protocol Specifications <MT96001-V2.4>

Spec Title	Spec Tag	Applicability
MDM Data Encoding Specification	48605-20160131, Exp	Required
MDM Encapsulation Specification	48606-20200707, Exp	Required

6.1.1 MDM Data Encoding Specification <48605-20160131, Exp>

An MDM shall be binary encoded and transmitted in big-endian byte order.

6.1.2 MDM Encapsulation Specification <48606-20201002, Exp>

An MDM layout shall consist of a header and a body as shown in Table 27 below. The Header shall be required for all MDM packet types. The Body shall be optional.

Table 27 MDM Layout

MDM Header
MDM Body

Many MDM types are quite small in size. MDM Types 2-7 range from 16 bytes to 68 bytes in total size (MDM header and body). However, sizes for MDM Type 1 messages are significantly larger, especially for signal data packet messages. Sizing for these packet types that do transit a network has to be taken into consideration. Datagram fragmentation at the data-link level shall be avoided. To avoid datagram fragmentation for MDMs for transiting a network with required Ethernet/IP/UDP wrappers, the maximum MDM Header and Body size shall be limited so as to prevent the total Ethernet/IP/UDP/MDM message size from exceeding the maximum transmission unit size of 9000 bytes for Ethernet Jumbo Frames. Instantiations of this specification may further limit the maximum transmission unit size for an Ethernet/IP/UDP/MDM total message length of 1500 bytes.

6.1.2.1 MDM Header

The format of the MDM Header shall be in accordance with Table 28 below. The size of the MDM Header shall be four words (16 bytes). All fields shall be required.

Table 28 MDM Header Format

32-bits			
16-bits		16-bits	
8-bits	8-bits	8-bits	8-bits
MDM PREAMBLE			ACK
VERSION MAJ	VERSION MIN	MDM SEQUENCE NUMBER	
ML2B INTERFACE ID			
MDM TYPE		NUMBER OF MESSAGES	

6.1.2.1.1 MDM Preamble (24 bits)

The MDM Preamble field (MDM PREAMBLE) shall be a 24-bit field using the following sequence of three UTF-8 (8-bit Unicode Transformation Format) characters: 'M' (0x4D), 'D' (0x44), and 'M' (0x4D).

6.1.2.1.2 MDM Acknowledge (8 bits)

The MDM Acknowledge field (ACK) shall be an 8-bit field that for MDM Message Types 1, 3, 4, 5, 6, and 7 shall be set to "0000000" (0) when an acknowledge response is not being requested and shall be set to "00000001" (1) when an acknowledge response is being requested. For MDM Type 1 containing VRT signal data and/or context content, this field shall always be set to "0000000" (0) since these messages will always be multicasted. For MDM Type 2, this field has a different meaning as described in section "MDM Acknowledgement Message (Type 2) Specification <48611-20180928, Exp>" below.

6.1.2.1.3 MDM Version (16 bits)

The MDM Version fields (VERSION MAJ and VERSION MIN) shall contain the major and minor versions of the MDM. The major version (VERSION MAJ) of the MDM shall be identified by an 8-bit, unsigned integer greater than or equal to 0 and less than 256. The minor version (VERSION MIN) of the MDM shall be identified by an 8-bit, unsigned integer greater than or equal to 0 and less than 256. The MDM Version fields indicate the version of the MDM Header as defined by this specification. The current major version is 2 and the current minor version is 4.

6.1.2.1.4 MDM Sequence Number (16 bits)

For most MDM Types (1, 3, 4, 5, 6, and 7), the Sequence Number field (MDM SEQUENCE NUMBER) shall contain a monotonically increasing number that indicates the sequence number of the MDM with respect to the sending ML2B interface (ML2B INTERFACE ID) to the destination entity. (A destination entity is the destination UDP/IP address/port be it a unicast or multicast transmission.) This number shall be a 16-bit, unsigned integer. The sequence number shall increase by one (1) for each MDM sent *from* the sending entity to the destination entity. When the sequence number reaches the maximum value for a 16-bit, unsigned integer (65,535), it shall reset to the value of zero.

For MDM Type 2 (Acknowledgement), the Sequence Number field (MDM SEQUENCE NUMBER) shall contain the value of the origination message that is being acknowledged.

In the case of a failed acknowledgement, the retransmission by the original sender shall continue to monotonically increase the Sequence Number field (MDM SEQUENCE NUMBER) in accordance with the paragraph above.

6.1.2.1.5 ML2B Interface ID (32 bits)

The ML2B Interface ID field (ML2B INTERFACE ID) shall contain a 32-bit, unsigned integer that identifies the specific source and destination of the MDM. The ML2B Interface ID field shall consist of the Origination ID and Destination ID subfields as depicted in
Table 29 below.

Table 29 ML2B Interface ID Format

32-bits																															
16-bits																16-bits															
8-bits								8-bits								8-bits								8-bits							
31	30	29	28	27	26	25	24	23	22	21	20	19	18	17	16	15	14	13	12	11	10	9	8	7	6	5	4	3	2	1	0
ORIGINATION ID																DESTINATION ID															

Origination ID subfield (16 bits)

The Origination ID subfield shall consist of 16 bits containing the ML2B Unique Identifier (MUI) that identifies the message originator.

Destination ID subfield (16 bits)

The Destination ID subfield shall consist of 16 bits containing the ML2B Unique Identifier (MUI) that identifies the final recipient of a unicast message or set to “0000000000000000” for all multicast messages.

6.1.2.1.6 MDM Type (16 bits)

The MDM Type field (MDM TYPE) shall contain a 16-bit, unsigned integer that provides the type of the message(s) in the MDM Body. All messages within a particular MDM packet shall be of the same type. MDM packet types, number of data messages, and data message size shall be in accordance with Table 30 below.

Table 30 MDM Types

MDM Packet Type Description	MDM Packet Type Number	Number of Data Messages in One Packet Payload	Data Message Size
VITA Radio Transport (VRT)	1	1	Variable Length
Acknowledgement	2	0	NA
Time of Day	3	1	Fixed - One Word
Signal Port User ID	4	1	Fixed - Nineteen Words
Health Status	5	1	Fixed - Two Words
Command	6	1	Fixed - Three Words
Switch Group User ID	7	1	Fixed - Thirteen Words

The “MDM Types” section contains the specific message formats for each MDM Type contained in Table 30. New MDM packet types may be added in future releases of this document, so it is necessary that interfaces designed to support MDMs shall be able to handle unknown message types. The MDM Type is provided in the binary header of the MDM to aid in top-level filtering of MDMs. If an interface implementation receives an MDM of an unknown type, the interface shall discard the MDM and, if an acknowledgement was requested, send an acknowledgement message (Type 2) indicating “invalid message” per section “MDM Acknowledgement Message (Type 2) Specification <48611-20180928, Exp>” below.

6.1.2.1.7 Number of Messages (16 bits)

The Number of Messages field (NUMBER OF MESSAGES) shall contain a 16-bit, unsigned integer that provides the number of messages of MDM Message Type (MDM TYPE) contained in the MDM body. The regulations for the Number of Messages field (NUMBER OF MESSAGES) shall be in accordance with Table 30 above. MDM Types are described in detail in the “MDM Types” section.

6.1.2.2 MDM Body

The MDM Body shall consist of the data message according to the MDM Type (MDM TYPE) in accordance with Table 30 above. The length of MDM Type 1 messages is variable and sized accordingly for the maximum transmission unit length of the implementation. MDM Type 2 messages shall have no MDM Body.

6.2 MDM Networking Specifications <MT96002-V2.4>

The MDM message structure is used in six distinct interfaces across three different MORA component types. MDM message interactions may occur within a single MORA Device (intra-device) or occur between multiple MORA Devices. MDM message interactions between devices require the message to transit a network and therefore shall be in accordance with the following networking specifications in Table 31 below.

Table 31 MDM Networking Specifications <MT96002-V2.4>

Spec Title	Spec Tag	Applicability
Low Latency Copper Data Physical and Data-Link Layer Specifications	MT91013-V2.4	(1) Required: MT91013 or MT91014
Low Latency Fiber Data Physical and Data-Link Layer Specifications	MT91014-V2.1	
Standard for Ethernet Specification	48001-20160131, Exp	Required
Virtual LANs Specification	48002-20160131, Exp	Required
Standard for Internet Protocol and User Datagram Protocol Specification	48005-20160131, Exp	Required
Jumbo Frame Packet Support Specification	48007-20200707, Exp	Required
MDM Traffic Marking Specification	48008-20200707, Exp	Required

(1) One or more of MT91013, MT91014 is Required

6.3 MDM Types

There are seven MDM Types designated Type 1 through Type 7. MDM Type 1 is functionally the most complex type with data message sizes that vary greatly from very small (simple control packet) to very large (streaming IQ data). MDM Types 2-7 are functionally simple with very small data message sizes. These seven types of MDMs are described in detail in this section.

6.3.1 MDM VITA Radio Transport (VRT) (Type 1) Specifications

MDM VRT (Type 1) messages are used to provide command, data, and context of temporal and spectral data streams to/from radios and users to promote interoperability between RF systems. MDM VRT messages are defined by the MORA Specification and the *ANSI/VITA 49.2-2017 VITA Radio Transport (VRT) Standard* [8]. The MORA Specification takes precedence over the VITA 49.2 Standard by limiting and providing further definition to ensure interoperability in MORA systems.

The reader will be responsible for obtaining, reviewing, and comprehending the VITA 49.2 Standard because this MORA specification document does not reproduce the entire VITA 49.2 Standard. The MORA specific clarifications, limitations,

and definitions to the VITA 49.2 Standard are fully presented here in in this section. Where the VITA 49.2 Standard is being used without clarification, limitation, or further definitions, the reader is to refer to the *ANSI/VITA 49.2-2017 VITA Radio Transport (VRT) Standard* [8].

6.3.1.1 MORA Implementation of ANSI/VITA 49.2 Standard

MDM VRT Type 1 messages are based on the following summary list of MORA clarifications, limitations, and definitions to the VITA 49.2 Standard.

- **MORA VITA 49.2 Limited Packet Types Supported (VRT Header Bits 31 - 28)**
    - Signal Data with Stream ID (Packet Type "0001")
    - Context (Packet Type "0100")
    - Command (Packet Type "0110")
- **MORA VITA 49.2 Timestamp Format Limitation and Definition**
    - Timestamp Integer (TSI) Format is real time UTC seconds only (VRT Header Bits 23, 22)
    - Timestamp Fractional (TSF) Format is real time UTC picoseconds only (VRT Header Bits 21, 20)
    - Timestamp Definition Table - mapped to Packet Type and Sub Type
- **MORA VITA 49.2 Definitions within the VRT General Prologue**
    - Stream ID (SID) Field Definition
        - Mandatory for all MORA Packets
        - Specific Bit Field definition
    - Class ID (CID) Field Definition
        - Clarified Use of Pad Bit Count
        - Specific Bit Field definition for Information Class and Packet Class
- **MORA VITA 49.2 Limited Context/Control Fields and Context/Control Indicator Fields (CIFs)**
    - MORA/VITA 49.2 Matrix
        - MORA utilizes 33 VITA 49.2-defined fields within CIF words 0 and 1 only
- **MORA VITA 49.2 Context/Control Field Clarifications/Limitations/Definitions**
    - Reference Point Identifier Definition
        - Specific Bit Field definition that associates Stream ID with an Antenna Resource
    - State/Event Indicator Field Definition
        - Specific Bit Field definition for Test Source On bits
    - Signal Data Payload Format Field Limitations
        - Specific Limitation in Data Sample and Data Item Formats
    - Spectrum Field Clarifications
        - Resolution Subfield
        - Weighting Factor Subfield
        - Window-Time Delta Subfield
    - Sector Scan/Step Field Clarifications
        - Bitmapping of Indicators in Header Field
        - F2 Stop Frequency Subfield
        - Resolution Bandwidth Subfield
        - Threshold Subfield
    - Discrete I/O 32-Bit Field Definition (Word 1)
        - Specific Bit Field Definition for describing and setting Gain Control Mode, Reference Source, Coherency, Test Source, Triggers, and RF Mode
    - Discrete I/O 64-Bit Field Definition (Words 2 and 3)
        - Specific Bit Field Definition for describing and setting RF Filters and RF Switches
    - Buffer (Size) Status Field
        - Clarified Field Name

        - Specific Definitions for Level and Status Subfields
- **MORA VITA 49.2 Signal Data Packet Limitations/Definitions**
    - Limited Signal Data Packet Type (signal data with Stream ID ONLY)
    - Limited Signal Data Sample and Data Item Formats
    - Timestamp and Trailer Always Required
    - Trailer State and Event Indicator Definition for Test Source On bits
- **MORA VITA 49.2 Context Packet Limitations/Definitions**
    - Limited Timekeeping Modes - Precision Only (Packet Header TSM Field always = zero)
    - Limited Matrix of VITA 49.2 Context Fields
    - Context Packet Generation Rule - includes a modified version of rule 7.1.5-1 from VITA 49.0
- **MORA VITA 49.2 Command Packet Limitations/Definitions**
    - Limited Matrix of VITA 49.2 Control Fields
    - Support optional use of Controller/Controllee ID fields only (NO UUID fields)
    - Limited Acknowledge Functions
        - Support Validation Acknowledge (ReqV/AckV) functionality for all Sub Types
        - NO support for Execution Acknowledge (AckX) or Query Status Acknowledge (AckS) packet variants since they are primarily redundant to context packet functions
            - AckX packets are primarily redundant to context packet generated as required upon execution of controls for any persistent field
        - Support control packet ReqV and ReqS ONLY
            - ReqS results in a full context message being sent (with controls implemented if action is to execute) and not an AckS packet
        - Revised CAM Bit Field Figures for Control, Acknowledge, and Control-Cancellation Packets

The following sections will present the details on these MORA limitations and definitions to the VITA 49.2 Standard.

6.3.1.2 MDM VRT Message Structure Specification <48607-20200707, Exp>

Table 32 MDM VRT Message Format

32-bits			
16-bits		16-bits	
8-bits	8-bits	8-bits	8-bits
MDM PREAMBLE			ACK
VERSION MAJ	VERSION MIN	MDM SEQUENCE NUMBER	
ML2B INTERFACE ID			
MDM TYPE		NUMBER OF MESSAGES	
VRT MESSAGE			

MDM VRT (Type 1) messages shall be used to provide command, data, and context of temporal and spectral data streams to/from radios and users to promote interoperability between RF systems. The MDM VRT message structure shall be in accordance with Table 32 above. The MDM Type 1 header fields are described in section "MDM Encapsulation Specification <48606-20201002, Exp>" above. The MDM Type 1 VRT data message field is defined below.

6.3.1.2.1 VRT Message Format

A VRT message consists of a Prologue, Payload, and an optional Trailer. Figure 14 depicts the VITA 49.2 layout of a VRT message with its components - Header, Payload, and Trailer with the MORA limitations shown in red. For MORA, the Stream Identifier shall be required and the Trailer shall be required for all Signal Data Packets.

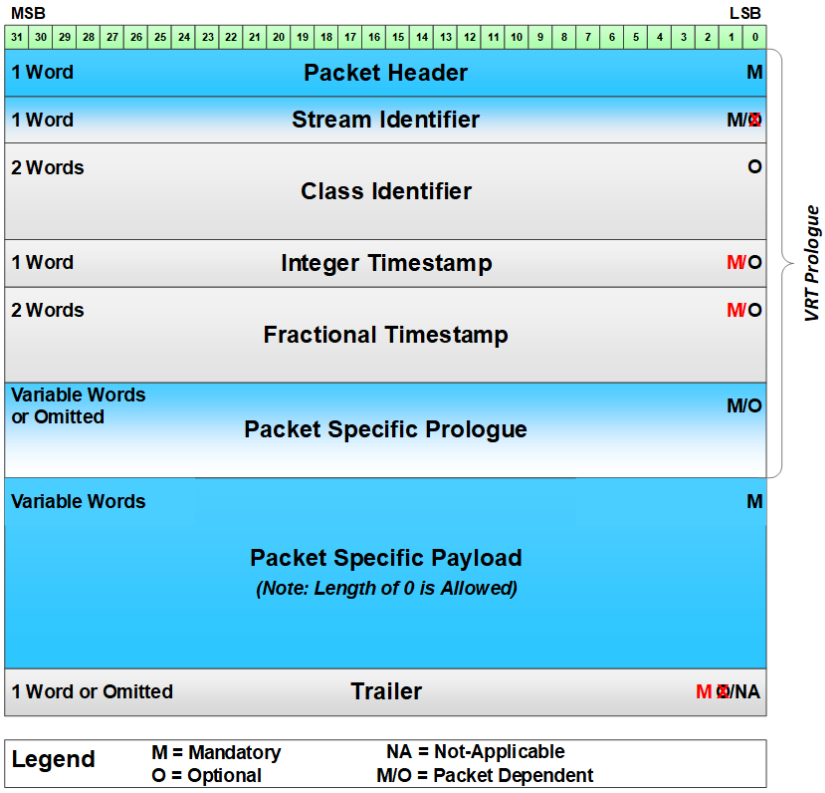

Figure 14 VRT Message Structure

6.3.1.2.2 VRT Prologue

The VRT Prologue contains a Packet Header and may contain a Stream Identifier, Class Identifier, Integer Timestamp, Fractional Timestamp, and Packet Specific Prologue. The structure of the VRT Prologue is described in the VITA 49.2 Standard and represented here in Figure 15 with MORA limitations shown in red. For MORA, the Stream Identifier shall be required.

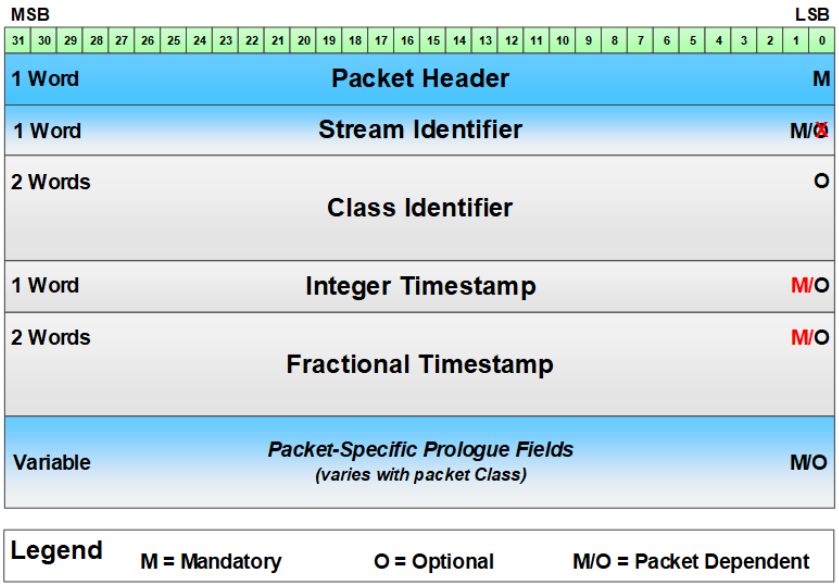

Figure 15 VRT Prologue Structure

Per the VITA 49.2 Standard, the VRT Prologue contains both required and optional fields. For MORA, some optional fields are required as specified below in the description of each field.

6.3.1.2.3 VRT Packet Header Field (1 word)

Table 33 below depicts the bit fields for the VRT Packet Header.

Table 33 VRT Packet Header Field

	31	30	29	28	27	26	25	24	23	22	21	20	19	18	17	16	15	14	13	12	11	10	9	8	7	6	5	4	3	2	1	0
1 Word	Packet Type				C	Indicators			TSI		TSF		Packet Count				Packet Size															

The MORA implementation specifically limits or defines the Packet Type, Timestamp Integer (TSI), and Timestamp Fractional (TSF). VRT Packet Header bit fields not appearing below shall be used in accordance with the VITA 49.2 Standard.

<u>VRT Packet Type bit field (4 bits)</u>
The VRT Packet Type field shall be a 4-bit, unsigned integer field that defines the type of VRT message contained. This field is required. The VRT Types are described in the VITA 49.2 Standard and for MORA, the implementation shall be in accordance with Table 34 below.

Table 34 VRT Packet Types

TYPE Value	Meaning
"0001" (1)	Signal Data Packet with Stream Identifier
"0100" (4)	Context Packet
"0110" (6)	Command Packet

Timestamp Integer (TSI) bit field (2 bits)

As shown in Table 35 below, the TSI is a bit field that shall be set to "00" (0) to indicate that the Timestamp Integer (TSI) field is not present or set to "01" (1) to indicate that the field is present and relative to Coordinated Universal Time (UTC) for MORA. See the VITA 49.2 Standard for a detailed discussion of this bit field.

Table 35 TSI Code Types

TSI Code	Meaning
"00"	No Integer-seconds Timestamp field included
"01"	UTC

Timestamp Fractional (TSF) bit field (2 bits)

As shown in Table 36 below, the TSF is a bit field that shall be set to "00" (0) to indicate that the Timestamp Fractional (TSF) field is not present or set "10" (2) to indicate that the field is present and relative to Real-Time picoseconds for MORA. See the VITA 49.2 Standard for a detailed discussion of this bit field.

Table 36 TSF Code Types

TSF Code	Meaning
"00"	No Fractional-seconds Timestamp field included
"10"	Real-Time (Picoseconds) Timestamp

Timestamp Meaning

MORA limits the prologue timestamp TSI and TSF fields to always reflect UTC real-time values. In addition to this limitation, MORA further defines the meaning of the prologue timestamp by packet type, sub type, and variant in the table below. Furthermore, the optional use of additional fields (Reference ID and Timestamp Adjustment) has an impact to timestamp overall functionality and meaning. For MORA, the use of the prologue timestamp, reference ID, and Timestamp adjust fields shall be in accordance with Table 37 below.

Table 37 Timestamp Meaning by Packet Type/Sub Type/Variant

Packet Definition			MORA Timestamp Meaning		
Packet Type	**Packet Sub Type**	**Packet Sub Type Variant**	**Prologue Timestamp Only**	**Prologue Timestamp + Reference ID**	**Prologue Timestamp + Reference ID + Timestamp Adjustment**
Signal Data with SID	Time Data		The time of RX ADC or TX DAC of the first time-domain data sample equals the prologue timestamp	The time of RX or TX at the reference point (antenna) of the first time-domain data sample equals the prologue timestamp	The time of RX or TX at the reference point (antenna) of the first time-domain data sample equals the prologue timestamp + timestamp adjustment
	Spectrum Data		The time of RX ADC or TX DAC of the final time-domain sample equals the prologue timestamp	The time of RX or TX at the reference point of the final time-domain sample equals the prologue timestamp	The time of RX or TX at the reference point of the final time-domain sample equals the prologue timestamp + timestamp adjustment
Context	FOR MORA TSM bit always = "0"		The time at which included context field values went into effect equals the prologue timestamp	The time at which included context field values went into effect at the reference point (antenna) equals the prologue timestamp	The time at which included context field values went into effect at the reference point (antenna) equals the prologue timestamp + timestamp adjustment

Packet Definition			MORA Timestamp Meaning		
Packet Type	**Packet Sub Type**	**Packet Sub Type Variant**	**Prologue Timestamp Only**	**Prologue Timestamp + Reference ID**	**Prologue Timestamp + Reference ID + Timestamp Adjustment**
Command	Control	Control	The time at which included control field values are to be put into effect in accordance with the CAM T3/T2/T1 bits equals the prologue timestamp	The time at which included control field values are to be put into effect at the reference point in accordance with the CAM T3/T2/T1 bits equals the prologue timestamp	The time at which included control field values are to be put into effect at the reference point in accordance with the CAM T3/T2/T1 bits equals the prologue timestamp + timestamp adjustment
		Control Cancellation	The time at which the cancellation message was generated (overrides VITA 49.2 rule 8.5-6)	N/A	N/A
	Acknowledge	AckV	The time at which the acknowledge message was generated (overrides VITA 49.2 rule 8.4.1.5-3)	N/A	N/A
		AckX	NOT SUPPORTED IN MORA - SEE CONTEXT ABOVE		
		AckS	NOT SUPPORTED IN MORA - SEE CONTEXT ABOVE		

6.3.1.2.4 VRT Stream ID (1 word)

The VRT Stream ID field (STREAM ID) is an optional field in the VITA 49.2 Standard. For MORA, the Stream Identifier shall always be required. It shall be a 32-bit, unsigned integer containing the ID of the VRT messages belonging to a particular Information Stream. The Stream ID, in effect, allows processors to separate (de-multiplex) data from differing Information Streams. MORA's use of UDP/IP multicasting to specific UDP ports also keeps data from differing Information Streams separate (de-multiplexed). For MORA, the format of the VRT Stream ID shall be in accordance with Table 38 below.

Table 38 MORA Stream ID Format

32-bits																															
16-bits																16-bits															
8-bits								8-bits								8-bits								8-bits							
31	30	29	28	27	26	25	24	23	22	21	20	19	18	17	16	15	14	13	12	11	10	9	8	7	6	5	4	3	2	1	0
STREAM ID																															

The Stream ID field (STREAM ID) shall contain Device Type, Device ID, Port ID, and the Sub Port ID. For signal data and context streams, the Stream ID shall indicate the resource (Signal Port, Sub Port, or Switch Group) that generated the stream. For command messages, the Stream ID shall indicate the resource that is to execute the command or indicate the resource (Signal Port, Sub Port, or Switch Group) providing acknowledgement. The bit fields within the Stream ID subfield shall be in accordance with Table 39 below.

Table 39 Stream ID Bit Field

32-bits																															
16-bits																16-bits															
8-bits								8-bits								8-bits								8-bits							
31	30	29	28	27	26	25	24	23	22	21	20	19	18	17	16	15	14	13	12	11	10	9	8	7	6	5	4	3	2	1	0
TYPE			DEVICE ID					PORT ID								SUBPORT ID															

Device Type (3 bits)
The Device Type bit field (TYPE) shall be a 3-bit, unsigned integer that specifies the Device Type. The Device Type shall be in accordance with Table 40 below.

Table 40 ID-Device Types

TYPE Value	Device Type
"000" (0)	Other (OTH)
"001" (1)	MORA Radiohead (RHD)
"010" (2)	MORA RF Conditioning and Distribution (RCD)
"011" (3)	MORA Software Defined Radio (SDR)
"100" (4)	Reserved
"101" (5)	Reserved
"110" (6)	Reserved
"111" (7)	Reserved

Device ID (6 bits)
The Device ID bit field (DEVICE ID) shall be a 6-bit, unsigned integer that specifies the number of the ID-Device Type. MORA systems may contain up to 63 of the same Device Types (e.g., 63 RHDs, 63 SDRs, etc.).

Port ID (7 bits)
The Port ID bit field (PORT ID) shall be a 7-bit, unsigned integer that specifies the number of the Signal Port of the Device ID. If the Port ID is zero and the Sub Port ID is zero, then a Port is not specified and the message shall pertain to the device level. If the Port ID is zero and the Sub Port ID is not zero, then the Sub Port ID represents a Switch Group ID. Otherwise, it shall be the number of the device's Port from 1 to 127.

Sub Port ID (16 bits)
The Sub Port ID bit field (SUBPORT ID) shall be a 16-bit, unsigned integer that specifies the number of the Signal Port's Sub Port of the Port ID. If the Sub Port ID is zero, then a Sub Port is not specified and the message shall pertain to the Port level. If the Port ID is zero and the Sub Port ID is not zero, then the Sub Port ID represents a Switch Group ID. Otherwise, it shall be the number of the Signal Port's Sub Port from 1 to 65,535.

6.3.1.2.5 VRT Class ID (2 words)

The Class ID Indicator bit (C) in the VRT header field shall indicate if the Class ID is contained in the VRT Prologue. This (C) bit shall be set to "1" when the Class ID is included in the VRT Prologue, and set to "0" when it is not included. The VRT Class ID field is an optional field in the VITA 49.2 Standard. For MORA, it is optional; when used, it is specifically defined for MORA implementers. The Class ID field shall be a 64-bit, unsigned integer containing five subfields: Pad Bit Count, Reserved, Organizationally Unique Identifier, Information Class Code, and Packet Class Code. The information provided in the VRT Class ID field points to organization-specific documentation that describes information and packet streams developed specifically by the organization. The format of the VRT Class ID field is described in the VITA 49.2 Standard and is shown in Table 41 below.

Table 41 VRT Class ID Format

32-bits																															
16-bits																16-bits															
8-bits								8-bits								8-bits								8-bits							
31	30	29	28	27	26	25	24	23	22	21	20	19	18	17	16	15	14	13	12	11	10	9	8	7	6	5	4	3	2	1	0
PAD BIT COUNT					Reserved			ORGANIZATIONALLY UNIQUE IDENTIFIER																							
INFORMATION CLASS CODE																PACKET CLASS CODE															

The Pad Bit Count (PAD BIT COUNT) subfield shall be a 5-bit, unsigned-integer containing the pad bit value minus one, only when the pad bit count is equal to or greater than the item packing field size. Otherwise, the Pad Bit Count subfield value shall be set to "00000" (0).

The Reserved subfield (Reserved) shall be a 3-bit, unsigned-integer with value "000" (0).

The Organizationally Unique Identifier subfield (ORGANIZATIONALLY UNIQUE IDENTIFIER) shall be the 24-bit number assigned by the IEEE Registration Authority to the organization that created the Information Class and Packet Class generating the VRT Packet Stream.

The Information Class Code subfield (INFORMATION CLASS CODE) shall be a 16-bit, unsigned integer containing the unique Information Class Code that defines the Information Stream containing the Packet Stream. The specifics of the Information Class Code are contained herein as specific class documentation. For MORA 2.4 information streams, this value shall be specifically defined as depicted in Table 42 below. The ID bit field shall be "01001101" (UTF-8 Code for 'M') for MORA. The VERSION MAJ bit field shall be "0010" (2) and the VERSION MIN bit field shall be "0100" (4) for MORA 2.4.

Table 42 Information Class Code Subfields

16-bits															
8-bits								8-bits							
15	14	13	12	11	10	9	8	7	6	5	4	3	2	1	0
ID ('M' in UTF-8)								VERSION MAJ				VERSION MIN			

The Packet Class Code subfield (PACKET CLASS CODE) shall be a 16-bit, unsigned integer containing the unique Packet Class Code that defines the Packet Class that was used to make the packet. The specifics of the Packet Class Code are contained herein as specific class documentation. The Packet Class Code subfield is shown in Table 43 below and the Packet Type value shall be in accordance with Table 34 above.

Table 43 Packet Class Code Subfields

16-bits															
8-bits								8-bits							
15	14	13	12	11	10	9	8	7	6	5	4	3	2	1	0
RESERVED												PACKET TYPE			

6.3.1.3 MDM VRT Context and Command Fields Specification <48616-20210301, Exp>

The rich set of VRT Context and Control Fields specified within the VITA 49.2 Standard establish spatial, kinematic, signal, spectral, temporal, identifier, waveform, environmental, diagnostic, discrete IO, and attribute fields that can be used for describing context (conditions) and commanding controls (settings) in complex radio transport operations. There are over 90 fields within the VITA 49.2 Standard with the option of 12 sub-fields (attributes) which can be attached to each

field. The combination of 90+ fields and the attributes provide hundreds of information types, a significant expansion over the 24 fields provided in VITA 49.0.

The MORA implementation of these available fields significantly limits the context and control fields used in MDM VRT (Type 1) messages. This was necessary to eliminate redundant functions already performed over the VDB as well as other MDM Types in MORA applications. The limitation was also necessary to reduce the broad range nature of the framework to a subset that was reasonable to develop devices for MORA systems that would be both compatible and interoperable.

Context/Command Indicator Fields (CIFs) are used to specifically identify which of the many available Context/Command fields are present in either a Context or Command packet. The CIF words have one bit uniquely associated to indicate presence for each of the Context/Command fields available in the VITA 49.2 Standard, as well as room for the addition of more fields in the future. The VITA 49.2 Standard has defined eight CIF words that are numbered CIF 0 through CIF 7. The first CIF word, named CIF 0, is mandatory and contains additional bits that specifically indicate the presence of additional CIF words. The MORA implementation shall strictly use fields from CIF 0 and CIF 1 only in accordance with Table 44 below.

Table 44 VITA 49.2 Context/Command Indicator Field (CIF) Matrix and Bit Assignments

Bit	CIF 0 (VITA 49.0) *Legacy Fields, CIF enables*	CIF 1 (VITA 49.2) *Spatial, Signal, Spectral, I/O, Ctl*	CIF 2 (VITA 49.2) *Identifiers (tags)*	CIF 3 (VITA 49.2) *Temporal, Environmental*	CIF 7 (VITA 49.2) *Attributes*
31	Context Field Change Indicator	Phase	Bind	Timestamp Details	Current Value
30	Reference Point Identifier	Polarization	Cited SID	Timestamp Skew	Average Value
29	Bandwidth	3-D Pointing Vector	Sibling(s) SID	*Reserved*	Median Value
28	IF Reference Frequency	3-D Pointing Vector Structure	Parent(s) SID	*Reserved*	Standard Deviation
27	RF Reference Frequency	Spatial Scan Type	Child(ren) SID	Rise Time	Max Value
26	RF Reference Frequency Offset	Spatial Reference Type	Cited Message ID	Fall Time	Min Value
25	IF Band Offset	Beamwidth	Controllee ID	Offset Time	Precision
24	Reference Level	Range (Distance)	Controllee UUID	Pulse Width	Accuracy
23	Gain	*Reserved*	Controller ID	Period	1st Derivative (Velocity)
22	Over-range Count	*Reserved*	Controller UUID	Duration	2nd Derivative (Acceleration)
21	Sample Rate	*Reserved*	Information Source	Dwell	3rd Derivative
20	Timestamp Adjustment	Eb/No BER	Track ID	Jitter	Probability
19	Timestamp Calibration Time	Threshold	Country Code	*Reserved*	Belief
18	Temperature	Compression Point	Operator	*Reserved*	*Reserved*
17	Device Identifier	2nd and Third-Order Intercept Points	Platform Class	Age	*Reserved*
16	State/Event Indicators	SNR/Noise Figure	Platform Instance	Shelf Life	*Reserved*

Bit	CIF 0 (VITA 49.0) *Legacy Fields, CIF enables*	CIF 1 (VITA 49.2) *Spatial, Signal, Spectral, I/O, Ctl*	CIF 2 (VITA 49.2) *Identifiers (tags)*	CIF 3 (VITA 49.2) *Temporal, Environmental*	CIF 7 (VITA 49.2) *Attributes*
15	Signal Data Packet Payload Format	Aux Frequency	Platform Display	*Reserved*	*Reserved*
14	Formatted GPS	Aux Gain	EMS Device Class	*Reserved*	*Reserved*
13	Formatted INS	Aux Bandwidth	EMS Device Type	*Reserved*	*Reserved*
12	ECEF Ephemeris	*Reserved*	EMS Device Instance	*Reserved*	*Reserved*
11	Relative Ephemeris	Array of CIFS	Modulation Class	*Reserved*	*Reserved*
10	Ephemeris Ref ID	Spectrum	Modulation Type	*Reserved*	*Reserved*
9	GPS ASCII	Sector Scan/Step	Function ID	*Reserved*	*Reserved*
8	Context Association Lists	*Reserved*	Mode ID	*Reserved*	*Reserved*
7	Field Attributes Enable	Index List	Event ID	Air Temperature	*Reserved*
6	*Reserved for CIF expansion*	Discrete I/O (32-bit)	Function Priority ID	Sea/Ground Temperature	*Reserved*
5	*Reserved for CIF expansion*	Discrete I/O (64-bit)	Communication Priority ID	Humidity	*Reserved*
4	*Reserved for CIF expansion*	Health Status	RF Footprint	Barometric Pressure	*Reserved*
3	CIF 3 Enable	V49 Spec Compliance	RF Footprint Range	Sea and Swell State	*Reserved*
2	CIF 2 Enable	Version and Build Code	*Reserved*	Tropospheric State	*Reserved*
1	CIF 1 Enable	Buffer Status	*Reserved*	Network ID	*Reserved*
0	*Reserved*	*Reserved*	*Reserved*	*Reserved*	*Reserved*

This MORA specification shall require support for the context/command fields shown in green above. The gray fields in the table above reflect fields that are defined or reserved in the VITA 49.2 Standard but shall not be required or used by MORA. Furthermore, this MORA specification adds further definition to some of the required context/command fields shown in green. These MORA specific definitions are fully presented in this section. Fields not shown in this section (without MORA limitation or further definitions) shall be used in accordance with the VITA 49.2 Standard.

6.3.1.3.1 Reference Point Identifier (CIF 0/Bit 30)

The Reference Point Identifier bit (CIF 0/Bit 30) shall be set to "1" to indicate that the Reference Point Identifier field is included within the Context or Command packet. The Reference Point Identifier field shall contain three subfields: Manifold Band ID, Antenna Array ID, and Array Element ID.

For MORA, the Reference Point Identifier field shall be formatted as depicted in Table 45 below.

Table 45 MORA Reference Point Identifier Field

32-bits																															
16-bits																16-bits															
8-bits								8-bits								8-bits								8-bits							
31	30	29	28	27	26	25	24	23	22	21	20	19	18	17	16	15	14	13	12	11	10	9	8	7	6	5	4	3	2	1	0
MANIFOLD BAND ID											ARRAY ID					ELEMENT ID															

The most significant 11 bits (bits 31 to 21) of the Reference Point Identifier field shall contain the Manifold Band ID (MANIFOLD BAND ID). Bits 20 to 16 shall contain the 5-bit Antenna Array ID (ARRAY ID) subfield. The least significant 16 bits of the Reference Point Identifier field shall contain the Array Element ID (ELEMENT ID) bit field.

Manifold Band ID Subfield (11 bits)
The Manifold Band ID subfield (MANIFOLD BAND ID) shall be an 11-bit, unsigned integer containing the manifold band number from 0 to 2,047. A manifold band shall be defined as a specific combination of antenna elements, aperture channel(s), and signal port(s) with specific operating frequency, azimuth, elevation, and polarization ranges for a given platform configuration. The combination of antenna elements may include elements from different antenna arrays.

Antenna Array ID Subfield (5 bits)
The Antenna Array ID subfield (ARRAY ID) shall be a 5-bit, unsigned integer containing the antenna array number from 0 to 31. An antenna array shall be defined as a collection of two or more “like” antenna elements. “Like” antenna elements share the same type, polarization, frequency range, boresight gain, and beamwidth. For single unique antenna element implementations, the Antenna Array ID shall be set to zero. The enumeration of ARRAY ID for antenna array implementations shall be assigned starting at "00001" (1) and increasing numerically in accordance with increasing array minimum frequency.

Array Element ID Subfield (16 bits)
The Array Element ID subfield (ELEMENT ID) shall be a 16-bit, unsigned integer containing the antenna element number from 1 to 65,535. An element shall be defined as a single antenna that captures or radiates electromagnetic energy in support of receive and/or transmit operations. Zero (0) is not a valid antenna element ID, but this value shall be used to reflect context or implement command fields at the whole array level. The enumeration for ELEMENT ID in array implementations shall be assigned starting at "0000000000000001" (1) and increasing numerically in accordance with the guidance below.

- Circular Arrays: Element #1 shall be assigned to the element phase center positioned closest to 0.000 degrees (sensor forward) azimuth and increase numerically, in accordance with clockwise rotation in azimuth, ending at 359.999 degrees.
- Linear Arrays: For a single row, linear array (2D), element #1 shall be assigned to the left most element as one faces the array boresight and increase numerically from left to right. If the linear array has multiple rows (3D), element #1 shall be assigned to the upper row (row one) leftmost element as one faces the array boresight. The row one element enumeration shall continue from left to right until the last element, and then monotonically increases from row one downward to row two, in that the first (numerically lowest) element number for row two is the element under element number one, and shall continue to increase numerically from left to right, and shall repeat in this fashion for all additional rows.
- Discrete Arrays: Element #1 shall be assigned to the element phase center positioned closest to 0.000 degrees azimuth (platform forward) and increase numerically in accordance with clockwise rotation in azimuth, ending at 359.999 degrees.

The enumeration for ELEMENT ID in single unique element implementations (ARRAY ID set to "00000" (0)) shall be assigned starting at "0000000000000001" (1) and increase numerically in accordance with increasing element minimum frequency.

It is important to note that MORA also supports the concept of manifold bands for antenna resources where combinations of elements from one or more arrays are used to develop an aperture manifold over a specific frequency range for the purpose of processing signal data for direction finding or receive beamforming (e.g., co-channel mitigation) as well as generating signal data for transmit beamforming. Manifold bands convey critical information on which antenna arrays and elements are to be used in forming the aperture manifold at a specified frequency. In some cases, the manifold might specify elements from two different array numbers, especially in cross over frequency regions. Manifold band enumeration shall be assigned starting at "00000000001" (1) and increase numerically in accordance with increasing manifold band minimum frequency.

6.3.1.3.2 State/Event Indicators (CIF 0/Bit 16)

The State/Event Indicators bit (CIF 0/Bit 16) shall be set to "1" to indicate that the State/Event Indicators field is included within the Context Packet. The State/Event Indicators field shall be used to indicate the validity of the data in the associated (by a common Stream ID) signal stream (analog or digital) as well as the status of the function(s) producing the signal stream. The format of the State/Event Indicators field is described in the VITA 49.2 Standard and is shown in Table 46 below.

Table 46 State/Event Indicators Field

32-bits																															
16-bits																16-bits															
8-bits								8-bits								8-bits								8-bits							
31	30	29	28	27	26	25	24	23	22	21	20	19	18	17	16	15	14	13	12	11	10	9	8	7	6	5	4	3	2	1	0
ENABLES												S&E INDICATORS												Reserved							

Enables (12 bits)
The Enables field (ENABLES) shall be a 12-bit bit field with each bit associated with a bit in the VRT State and Event Indicators field (S&E INDICATORS). When the ENABLES bit is set to one "1", the associated S&E INDICATORS bit is valid and applicable to the associated Signal Data stream.

State and Event Indicators (12 bits)
The State and Event Indicators field (S&E INDICATORS) shall be a 12-bit bit field with each bit associated with a bit in the VRT Enables field (ENABLES). When the ENABLES bit is set, the associated S&E INDICATORS bit is applicable to the associated Signal Data stream.

A context packet containing the State/Event Indicator field can be generated with a timestamp to reflect the precise time of the event(s) or state(s) change. The State/Event Indicator field Enable and Indicator Bits for MORA are further defined (bits 20 and 8) and shall be in accordance with Table 47 below.

Table 47 State/Event Indicator Field Enable and Indicator Bits

Enable Bit Position	Indicator Bit Position	Indicator Name	Period of Validity
31	19	Calibrated Time Indicator	Persistent
30	18	Valid Data Indicator	Persistent
29	17	Reference Lock Indicator	Persistent
28	16	AGC/MGC Indicator	Persistent
27	15	Detected Signal Indicator	Persistent
26	14	Spectral Inversion Indicator	Persistent
25	13	Over-range Indicator	Single Data Packet
24	12	Sample Loss Indicator	Single Data Packet
[23, 22, 21]	[11, 10, 9]	Reserved	N/A
20	8	Test Source On Indicator	Persistent
Bit Position		**Function**	**Period of Validity**
[7..0]		Reserved	N/A

6.3.1.3.3 Signal Data Packet Payload Format (CIF 0/Bit 15)

The Signal Data Packet Payload Format bit (CIF 0/Bit 15) shall be set to "1" to indicate that the Signal Data Packet Payload Format field is included within the Context packet. The Signal Data Packet Payload Format field shall contain eleven subfields: Packing Method, Real/Complex Type, Data Item Format, Sample-Component Repeat Indicator, Event-Tag Size, Channel-Tag Size, Data Item Fraction Size, Item Packing Field Size, and Data Item Size. The Signal Data Packet Payload Format is shown in Table 48 below.

Table 48 Signal Payload Packet Data Format Field

32-bits																															
16-bits																16-bits															
8-bits								8-bits								8-bits								8-bits							
31	30	29	28	27	26	25	24	23	22	21	20	19	18	17	16	15	14	13	12	11	10	9	8	7	6	5	4	3	2	1	0
P	RC		DIF					R	ETSIZE			CTSIZE				DIFS				IPSIZE				DISIZE							
REPEAT COUNT																VECTOR SIZE															

This MORA specification limits data formats for signal data streams similarly to the way that the VITA 49.a specification limited data formats listed under VITA 49.0. Therefore, the subfields of Real/Complex Type (bits 30 & 29) and Data Item Format (bits 28, 27, 26, 25, and 24) shall be limited as defined below. All other Signal Data Packet Payload Format subfields shall be used in accordance with the VITA 49.2 Standard.

Real/Complex Subfield

The Real/Complex subfield (RC) shall be a 2-bit, unsigned integer indicating the format of the Signal Data Samples used in the paired VRT Data Message. For MORA, this field shall be set in accordance with Table 49 below.

Table 49 Real/Complex Subfield

Code	Data Sample Format
"00" (0)	Real
"01" (1)	Complex, Cartesian

Note: The MORA software baseline developed for the C5ISR Center I2WD Radiohead reference design currently supports the Complex, Cartesian data sample format only.

Data Item Format Subfield

The Data Item Format subfield (DIF) shall be a 5-bit, unsigned integer indicating the type of Data Items used in the paired VRT Data Message. For MORA, this field shall be set in accordance with Table 50 below.

Table 50 Data Item Format Subfield

Code	Data Item Format
"00000" (00)	Signed Fixed-Point
“01101” (13)	IEEE-754 Half Precision (16-bit) Floating Point
"01110" (14)	IEEE-754 Single Precision (32-bit) Floating Point
"01111" (15)	IEEE-754 Double Precision (64-bit) Floating Point
"10000" (16)	Unsigned Fixed-Point

Note: The MORA software baseline developed for the C5ISR Center I2WD Radiohead reference design currently supports the Unsigned Fixed-Point data item format only.

6.3.1.3.4 Spectrum (CIF 1/Bit 10)

The Spectrum Identifier bit (CIF 1/Bit 10) shall be set to "1" to indicate that the Spectrum field is included within the Context or Command packet. The Spectrum field shall contain ten required subfields: Spectrum Type, Window Type, Number of Transform Points, Number of Window Points, Resolution, Span, Number of Averages, Weighting Factor, Spectrum F1-F2 Indices, and Window Time-Delta.

MORA clarified the following items relative to this field (which were subsequently updated in VITA 49.2):

- The Spectrum field, with its ten required subfields, consumes 13 words total (not 14 words)
- The Resolution subfield is a 64-bit two's complement subfield (pursuant to bandwidth field formatting)
- The Weighting Factor subfield default value is zero (not one)
- The Window Time-Delta subfield is a 32-bit field (not 64-bits) with three modes, including the following formats:
    - Time: Unsigned 32-bit value in nanoseconds
    - Samples: Unsigned 32-bit value representing number of samples
    - % Overlap: Signed 32-bit value with radix point to the right of bit 12 representing the percent overlap or gap

6.3.1.3.5 Sector Scan/Step (CIF 1/Bit 9)

The Sector Scan/Step Identifier bit (CIF 1/Bit 9) shall be set to "1" to indicate that the Sector Scan/Step field is included within the Context or Command packet. The Sector Scan/Step field has a three word header followed by an array of records. Each Sector Scan/Step record shall contain two required subfields: Sector Number and F1 Start Frequency. Additionally, each Sector Scan/Step record may contain up to ten optional subfields: F2 Stop Frequency, Resolution bandwidth, Tune Step Size, Number of Points, Default Gain, Threshold, Dwell Time, Start Time, Time 3, and Time 4. All records in the array shall contain the same subfields as indicated in the CIF subfield (Word 3).

MORA clarifies the following items relative to this field:

- The Bitmapping of Indicators in the CIF subfield shall be as follows:
    - Bit 31 = Sector Number (always set to one, as this is a required subfield)
    - Bit 30 = F1 Start Frequency (always set to one, as this is a required subfield)
    - Bit 29 = F2 Stop Frequency
    - Bit 28 = Resolution Bandwidth
    - Bit 27 = Tune Step Size
    - Bit 26 = Number of Points
    - Bit 25 = Default Gain
    - Bit 24 = Threshold
    - Bit 23 = Dwell Time
    - Bit 22 = Start Time
    - Bit 21 = Time 3
    - Bit 20 = Time 4
- The F2 Stop Frequency Subfield is an optional 64-bit field (not required)
- The Resolution Bandwidth subfield is an optional field (not required)

The Threshold subfield value is currently allowed in VITA 49.2 to be represented in one of two different units, either absolute power in dBm or relative power in dB. The current subfield bitmap does not support any way to differentiate what units are being represented by the subfield value. MORA further defines the following item relative to the Threshold subfield:

- The Threshold subfield bitmap shall be modified to include a units indicator bit in bit position 31 for Stage 2 threshold value and bit 15 for Stage 1 threshold value.
- Bit 31 and 15 shall be set as follows:
    - Setting these bits equal to one indicates the value represents an absolute power in dBm

- Setting these bits equal to zero indicates the value represents a relative power in dB
- Both Stage 1 (bits 16-30) and Stage 2 (bits 0-14) value bit fields' formatting remains two's compliment
- The radix points remain as described (to the right of bit 23 for Stage 2 and to the right of bit 7 for Stage 1)

6.3.1.3.6 Discrete I/O 32-Bit (CIF 1/Bit 6)

The Discrete I/O 32-Bit Identifier bit (CIF 1/Bit 6) shall be set to "1" to indicate that the Discrete I/O 32-Bit field is included within the Context or Command packet. The Discrete I/O 32-Bit field shall contain eight subfields: Discrete Field Indicator Bits (DFIB1), Reserved, Gain Control Mode (GC), Reference Source (REF), Coherency (CO), Test Source, Trigger (TG), and RF Mode (RF). For MORA, the Discrete I/O 32-Bit field shall be formatted as depicted in Table 51 below.

Table 51 MORA Discrete I/O 32-Bit Field Format

32-bits																															
16-bits																16-bits															
8-bits								8-bits								8-bits								8-bits							
31	30	29	28	27	26	25	24	23	22	21	20	19	18	17	16	15	14	13	12	11	10	9	8	7	6	5	4	3	2	1	0
DFIB1													GC			REF			CO	TEST SOURCE								TG		RF	
RF	TG	TS	CO	REF	GC	Reserved							1	2	1	2	3	L	P	WAVEFORM				DM				1	2	T	R

Discrete Field Indicator Bits 1 Subfield (6 bits)
The Discrete Field Indicator Bits 1 field (DFIB1) shall be a 6-bit subfield with each bit associated with a discrete subfield (RF, TG, TEST SOURCE, CO, REF, and GC). The DFIB1 subfield shall contain the following bit fields: RF Mode (RF), Trigger (TG), Test Source (TS), Coherency (CO), Reference Source (REF), and Gain Control Mode (GC). The DFIB1 bits shall be set to "1" to indicate that the associated discrete subfield value is valid.

Reserved Subfield (7 bits)
The Reserved subfield value shall be equal to "0000000" (0).

Gain Control Mode Subfield (2 bits)
The Gain Control Mode Subfield (GC) shall contain two single bit fields enumerated 1 and 2. Each bit field shall be individually set to reflect or set the gain control value - manual "0" (0) or automatic "1" (1).

The MORA enumeration of gain stages for this subfield (as well as the Gain Context/Command Field) in unidirectional (receive only or transmit only - i.e., ARX, ATX, DRX, and DTX) signal ports shall start at "01" (1) and increase in accordance with the order of occurrence in the RF chain signal flow. Therefore, if a signal port contains two gain stages, gain stage 1 precedes gain stage 2 and gain stage 2 follows gain stage 1. For shared signal resources in bi-directional signal ports (transmit and/or receive - i.e., ATR and DTR), the order of enumeration shall follow order of occurrence in the RF chain signal flow in receive mode.

Reference Source Subfield (3 bits)
The Reference Source Subfield (REF) shall contain three single bit fields enumerated 1, 2 and 3. Each bit field shall be individually set to reflect or set the source of reference signal value - internal "0" (0) or external "1" (1).
The MORA enumeration of reference sources for this subfield shall be assigned starting at 1 and increase numerically in accordance with increasing reference minimum frequency. For example, if there are two LO reference signals in use, one tunable LO from 1.4 to 4.0 GHz and one fixed LO at 2.8 GHz, the tunable LO would be numbered 1 and the fixed LO would be numbered 2.

Coherency Subfield (2 bits)

The Coherency Subfield (CO) shall be a 2-bit unsigned integer containing the Coherency Mode in accordance with Table 52 below. Coherency Modes include None "00" (0), Phase "01" (1), and Local Oscillator "10" (2). This subfield may be used to reflect, or set, how multi-channel frequency converters operate.

Table 52 Coherency Modes

Code	Coherency Mode
"00" (0)	None
"01" (1)	Phase Coherent
"10" (2)	Local Oscillator Coherent
"11" (3)	Reserved

Test Source Subfield (8 bits)

The Test Source Subfield (TEST SOURCE) shall contain two bit fields: Test Source Waveform (WAVEFORM) and the Test Source Delivery Method (DM). The WAVEFORM bit field shall be a 6-bit, unsigned integer describing or setting the waveform value in accordance with Table 53 below.

Table 53 Test Source Waveforms

Code	Waveform
"000000" (0)	CW (Unmodulated)
"000001" (1)	Waveform 1
.	.
.	.
.	.
"111111" (63)	Waveform 63

The DM bit field shall be a 2-bit, unsigned integer reflecting or setting the delivery method value in accordance with Table 54 below. Setting the DM bit field to Conducted On or Radiated On in a control packet shall result in the Test Source generating the waveform contained in the WAVEFORM bit field. The test source frequency shall be described/set in the Aux Frequency field if the field is included within the same control packet. The test source gain (level) shall be described/set in the Aux Gain field when the field is included within the same control packet.

Table 54 Test Source Delivery Methods

Code	Delivery Method
"00" (0)	Off
"01" (1)	Conducted On
"10" (2)	Radiated On
"11" (3)	Reserved

Trigger Subfield (2 bits)

The Trigger Subfield (TG) shall contain two single bit fields enumerated 1 and 2. Each bit field shall be individually set to reflect the trigger value - Normal "0" (0) or Assert "1" (1).

RF Control Subfield (2 bits)

The RF Control Subfield (RF) shall be a 2-bit unsigned integer containing the RF Mode in accordance with Table 55 below. RF Modes include Blank/Off "00" (0), Receive "01" (1), Transmit "10" (2), and Transmit and Receive "11" (3).

Table 55 RF Modes

Code	RF Mode
"00" (0)	Blank (Off)
"01" (1)	Receive Only
"10" (2)	Transmit Only
"11" (3)	Transmit and Receive

6.3.1.3.7 Discrete I/O 64-Bit (CIF 1/Bit 5)

The Discrete I/O 64-Bit Identifier bit (CIF 1/Bit 5) shall be set to "1" to indicate that the Discrete I/O 64-Bit field is included within the Context or Command packet. The Discrete I/O 64-Bit field shall contain eight subfields: Discrete Field Indicator Bits (DFIB2), Reserved, Filter Component 1, Filter Component 2, Filter Component 3, Discrete Field Indicator Bits (DFIB3), Reserved, and Switch Control/Status.

For MORA, the Discrete I/O 64-Bit field shall be formatted as depicted in Table 56 below.

Table 56 MORA Discrete I/O 64-Bit Field Format

32-bits																															
16-bits																16-bits															
8-bits								8-bits								8-bits								8-bits							
31	30	29	28	27	26	25	24	23	22	21	20	19	18	17	16	15	14	13	12	11	10	9	8	7	6	5	4	3	2	1	0
DFIB2			Reserved 1													FILTER SELECTIONS															
F1	F2	F3														FILTER 3					FILTER 2						FILTER 1				
DFIB3			Reserved 2									SWITCH CONTROL/STATUS																			
SW	r	r										GROUP ID							STATE ID												

Discrete Field Indicator Bits 2 Subfield (3 bits)
The Discrete Field Indicator Bits 2 subfield (DFIB2) shall be a 3-bit subfield with each bit associated with a discrete bit field (FILTER 3, FILTER 2 and FILTER 1). The DFIB2 subfield shall contain the following bit fields: Filter 1 (F1), Filter 2 (F2), and Filter 3 (F3). The DFIB2 bits shall be set to "1" (1) to indicate that the associated discrete bit field value is valid.

Reserved 1 Subfield (14 bits)
The Reserved 1 subfield value shall be equal to "00000000000000" (0).

Filter Selections Subfield (15 bits)
The MORA enumeration of filter stages for this subfield in unidirectional (receive only or transmit only - i.e., ARX, ATX, DRX, and DTX) signal ports shall start at "000000000000001" (1) and increase in accordance with the order of occurrence in the RF chain signal flow. Therefore, if a signal port contains three filter stages, filter stage 1 precedes filter stages 2 and 3, filter stage 2 follows filter stage 1 and precedes filter stage 3, and filter stage 3 follows filter stages 1 and 2. For shared signal resources in bi-directional signal ports (transmit and/or receive - i.e., ATR and DTR), the order of enumeration shall follow the order of occurrence in the RF chain signal flow in receive mode.

Each of the Filter 3 (FILTER 3), Filter 2 (FILTER 2), and Filter 1 (FILTER 1) subfields shall be a 5-bit field and shall contain a code from Table 57 below.

Table 57 Filter Selection

Code	Filter Selection
"00000" (0)	None (Bypass)
"00001" (1)	Filter Selection 1
"00010" (2)	Filter Selection 2
.	.
.	.
.	.
"11110" (30)	Filter Selection 30

"11111" (31)	Tunable Filter - requires use of Aux Frequency field (CIF 1/Bit 15) and optional use of Aux Bandwidth field (CIF 1/Bit 13)

Discrete Field Indicator Bits 3 Subfield (3 bits)
The Discrete Field Indicator Bits 3 subfield (DFIB3) shall be a 3-bit subfield with the most significant bit associated with the Switch Control/Status discrete subfield and two reserved bits. The DFIB3 subfield contains the Switch Control/Status (SW) bit and two reserved bits whose value shall be set to "00" (0). The DFIB3 Switch Control/Status (SW) bit shall be set to "1" (1) to indicate that the associated Switch Control/Status (SW) subfield value is valid.

Reserved 2 Subfield (9 bits)
The Reserved 2 subfield value shall be equal to "000000000" (0).

Switch Control/Status Subfield (12 bits)
The Switch Control/Status subfield (SWITCH CONTROL/STATUS) shall contain two bit fields: Switch Group ID (GROUP ID) and the Switch State ID (STATE ID). The GROUP ID bit field shall be a 7-bit, unsigned integer describing or setting the Switch Group ID value in accordance with Table 58 below.

Table 58 Switch Group ID

Code	Switch Group ID
"0000000" (0)	Reserved
"0000001" (1)	Switch Group 1
.	.
.	.
.	.
"1111111" (127)	Switch Group 127

The MORA enumeration of switch groups shall start at "0000001" (1) assigned to the switch group that contains the lowest Signal Port ID and shall increase numerically for each additional switch group based on the next lowest Signal Port ID contained in the switch group.

When describing or setting a switch group's switch state, the Stream ID field shall reflect the switch group's identity and not one of the signal ports contained within the switch group.

The Switch State ID (STATE ID) bit field shall be a 13-bit, unsigned integer describing or setting the switch state value in accordance with Table 59 below. Setting the STATE ID bit field to "0000000000000" (0) may be used to open connections in certain switch types (e.g., SPST).

Table 59 Switch State ID

Code	Switch State
"0000000000000" (0)	No Connection (NC)/Terminated
"0000000000001" (1)	Switch State 1
.	.
.	.
.	.
"1111111111111" (8,191)	Switch State 8,191

Figure 16 below illustrates the mapping of switch groups and switch states for an RCD Device performing an RF source selection function that implements a non-blocking full fan out switch topology. It also demonstrates the MORA switch group enumeration guidance.

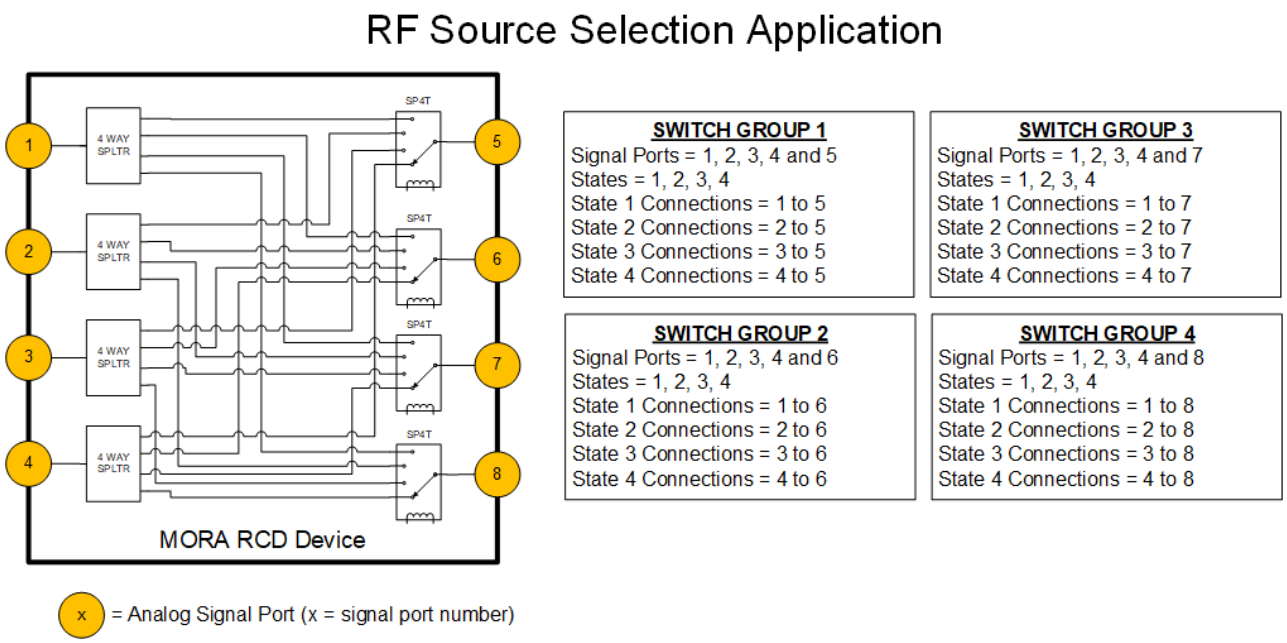

Figure 16 MORA Mapping of Switch Groups and States Example

6.3.1.3.8 Buffer Status (CIF 1/Bit 1)

The VITA 49.2 specification name for this field is shown as “Buffer Size” in the section heading and “Buffer Status” in the section body including the rules. MORA clarifies the name of this field to be “Buffer Status” since it more accurately reflects the content of the field. The Buffer Status bit (CIF 1/Bit 1) shall be set to "1" to indicate that the Buffer Status field is included within the Context packet. The Buffer Status field shall contain four subfields: Buffer Size, Reserved, Level and Status. The Buffer Status field is shown in Table 60 below.

Table 60 Buffer Status Field

32-bits																															
16-bits																16-bits															
8-bits								8-bits								8-bits								8-bits							
31	30	29	28	27	26	25	24	23	22	21	20	19	18	17	16	15	14	13	12	11	10	9	8	7	6	5	4	3	2	1	0
BUFFER SIZE																															
Reserved																LEVEL								STATUS							

The Buffer Size subfield shall be used in accordance with the VITA 49.2 Standard. MORA defines specific value meaning to the Level and Status subfields because the VITA 49.2 specification is ambiguous. Therefore, the subfields of Level (word 2 bits 15-8) and Status (word 2 bits 7-0) shall be defined below.

<u>Reserved Subfield (16 bits)</u>
The Reserved subfield value shall be equal to "0000000000000000" (0).

<u>Level Subfield (8 bits)</u>
The Level (LEVEL) subfield shall be an 8-bit, unsigned integer indicating the current level of the buffer. For MORA, this field shall be set to “11111111’ (255) to indicate the buffer is currently full and shall be set to “00000000” (0) to indicate the buffer is currently empty or shall be set to any value in between with proportional meaning (e.g. “01111111” (127) being half full).

Status Subfield (8 bits)

The Status (STATUS) subfield shall be an 8-bit, unsigned integer indicating the current status of the buffer. For MORA, this field shall contain a code from Table 61 below.

Table 61 Status Subfield

Code	Meaning
"00000001" (1)	Severe Underflow (RF discontinuity occurring)
“00000010” (2)	Moderate Underflow (RF discontinuity imminent)
“00000100” (4)	Minor Underflow (RF discontinuity possible)
“00001000” (8)	Insignificant Underflow
“00010000” (16)	Insignificant Overflow
“00100000” (32)	Minor Overflow (loss of data possible)
“01000000” (64)	Moderate Overflow (loss of data imminent)
“10000000” (128)	Severe Overflow (loss of data occurring)

6.3.1.4 MDM VRT Signal Data Packet Type Specification <48608-20200707, Exp>

The MDM VRT Signal Data Message is based on the VITA 49.2 Signal Data Packet Type "0001" with MORA limitations in packet type, trailer field use, data sample format, and data item format as well as MORA defined trailer state and event user defined bits. These limitations and definitions are documented in this section. All other regulations on Signal Data packets shall be used in accordance with the VITA 49.2 Standard.

6.3.1.4.1 Signal Data Packet Format

The VITA 49.2 Signal Data Packet format is shown below in Figure 17 with MORA limitations shown in red. For MORA Signal Data Packets, the Stream Identifier, Timestamp TSI and TSF fields, as well as the Trailer field shall be mandatory. The Timestamp TSI and TSF fields shall be in accordance with section “MDM VRT Message Structure Specification <48607-20200707, Exp>” above. The Stream Identifier field shall be in accordance with section “MDM VRT Message Structure Specification <48607-20200707, Exp>” above. If the Class Identifier field is included, it shall be in accordance with section “MDM VRT Message Structure Specification <48607-20200707, Exp>” above.

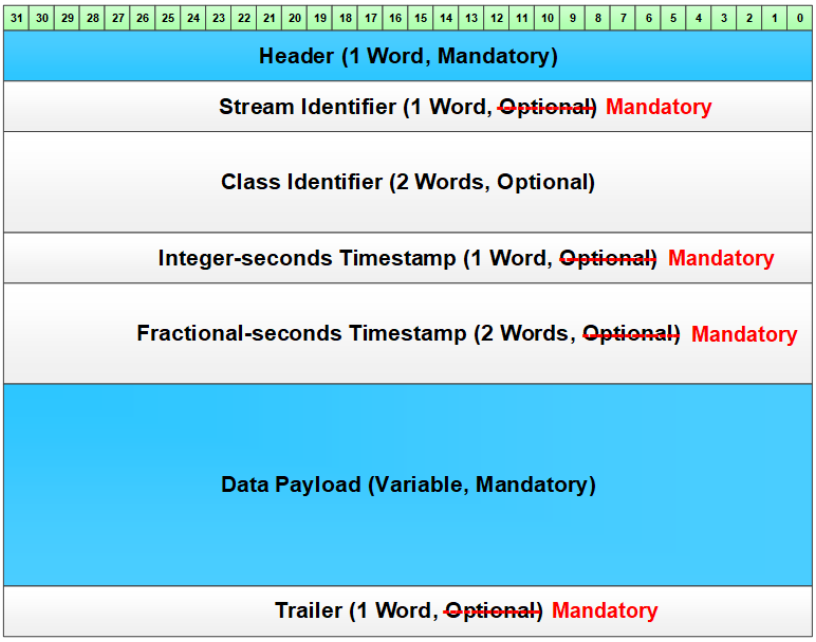

Figure 17 Signal Data Packet Format

6.3.1.4.2 Signal Data Header Packet

The Signal Data Header Packet as shown below in Table 62 shall be limited by MORA as follows:

- The Packet Type field (bits 31 -28) shall be set to "0001" in the Signal Data Packet Header, hence the Stream ID (SID) will always be present in the VRT prologue
- The Indicators field T bit (bit 26) shall always be set to "1"; hence, the Trailer field will always be present
- The TSI field (bits 23-22) shall be set to "01" for UTC
- The TSF field (bits 21-20) shall be set to "10" for Real-Time (Picoseconds) Timestamp

VRT Packet Header bit fields not appearing below shall be used in accordance with the VITA 49.2 Standard.

Table 62 Signal Data Packet Header

	31	30	29	28	27	26	25	24	23	22	21	20	19	18	17	16	15	14	13	12	11	10	9	8	7	6	5	4	3	2	1	0
1 Word	Packet Type				C	Indicators			TSI		TSF		Packet Count				Packet Size															
	"0"	"0"	"0"	"1"		T	Nd0	S	"0"	"1"	"1"	"0"																				

6.3.1.4.3 Signal Data Sample and Item Formats

The Signal Sample and Data Item Formats shall be limited by MORA in accordance with Table 49 and Table 50 above.

6.3.1.4.4 Trailer State and Event Enable and Indicator Bits

For MORA, the VRT Trailer is required for the Signal Data message. The VRT Trailer contains fields that indicate the validity of the data in the VRT Payload as well as the status of the function(s) producing the data. The format of the VRT Trailer is described in the VITA 49.2 Standard and is shown in Table 63 below.

Table 63 VRT Trailer Format

32-bits																																
16-bits																	16-bits															
8-bits								8-bits									8-bits								8-bits							
31	30	29	28	27	26	25	24	23	22	21	20	19	18	17	16	15	14	13	12	11	10	9	8	7	6	5	4	3	2	1	0
ENABLES												S&E INDICATORS												E	COUNT						

VRT Enables (12 bits)

The VRT Enables field (ENABLES) shall be a 12-bit bit field with each bit associated with a bit in the VRT State and Event Indicators field (S&E INDICATORS). The ENABLES bit shall be set to indicate the associated S&E INDICATORS bit is valid and applicable to the data within the Signal Data packet. There is no provision as to the precise time of the event(s) or state(s) change only that it is to be associated with the data in the packet. The ENABLES bits shall be used in accordance with Table 64 below.

VRT State and Event Indicators (12 bits)

The VRT State and Event Indicators field (S&E INDICATORS) shall be a 12-bit bit field with each bit associated with a bit in the VRT Enables field (ENABLES). When the ENABLES bit is set, the associated S&E INDICATORS bit is valid and applicable to the Signal Data packet. There is no provision as to the precise time of the event(s) or state(s) change, only that it is to be associated with the data in the packet. The S&E INDICATORS bits shall be used in accordance with Table 64 below.

The Signal Data Packet Trailer's State and Event Enable and Indicator Bits are further defined (bits 20 and 8) by MORA, as shown in Table 64 below.

Table 64 Trailer Enable and Indicator Bits

Enable Bit Position	Indicator Bit Position	Indicator Name
31	19	Calibrated Time Indicator
30	18	Valid Data Indicator
29	17	Reference Lock Indicator
28	16	AGC/MGC Indicator
27	15	Detected Signal Indicator
26	14	Spectral Inversion Indicator
25	13	Over-range Indicator
24	12	Sample Loss Indicator
23,22	11,10	Sample Frame Indicators, User-Defined
21	9	User-Defined Indicator
20	8	Test Source On Indicator

6.3.1.5 MDM VRT Context Packet Type Specification <48609-20200903, Exp>

The MDM VRT Context Message is based on the VITA 49.2 Context Packet Type "0100" with MORA limitations in context fields supported as well as the MORA specific definitions for context fields as contained in section "MDM VRT Context and Command Fields Specification <48616-20210301, Exp>". MORA also defines specific regulations on context packet generation. These limitations and definitions are documented in this section. All other regulations on Context packets shall be used in accordance with the VITA 49.2 Standard.

6.3.1.5.1 Context Packet Format

The VITA 49.2 Context Packet format is shown below in Figure 18 with MORA limitations shown in red. The Stream Identifier field shall be in accordance with section "MDM VRT Message Structure Specification <48607-20200707, Exp>" above. If the Class Identifier and Timestamp TSI and TSF fields are included, they shall be in accordance with section "MDM VRT Message Structure Specification <48607-20200707, Exp>" above. The only optional Context Indicator Field shall be CIF 1. Optional CIFs 2-7 shall not be supported under MORA pursuant to section "MDM VRT Context and Command Fields Specification <48616-20210301, Exp>" above.

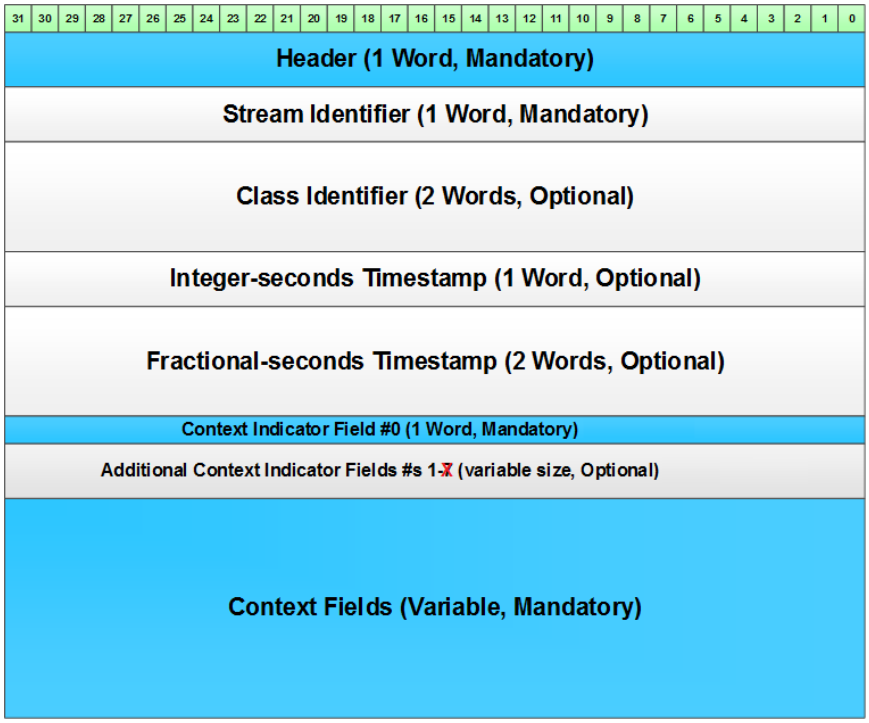

Figure 18 Context Packet Format

6.3.1.5.2 Context Header Packet

The Context Header Packet, as shown below in Table 65, shall be limited by MORA as follows:

- The TSM field (bit 24) shall always be set to "0".
- The TSI field (bits 23-22) shall be limited in accordance with Table 35 above. The TSI field (bits 23-22) may be set to "00" only when the “Context Field Change Indicator” (CIF 0 Bit 31) field is present and its value is equal to "0".
- The TSF field (bits 21-20) shall be limited in accordance with Table 36 above. The TSF field (bits 21-20) may be set to "00" only when the “Context Field Change Indicator” (CIF 0 Bit 31) field is present and its value is equal to "0".

VRT Packet Header bit fields not appearing below shall be used in accordance with the VITA 49.2 Standard.

Table 65 Context Packet Header

	31	30	29	28	27	26	25	24	23	22	21	20	19	18	17	16	15	14	13	12	11	10	9	8	7	6	5	4	3	2	1	0
1 Word	Packet Type				C	R	Ndo	TSM	TSI		TSF		Packet Count				Packet Size															
	"0"	"1"	"0"	"0"																												

6.3.1.5.3 MORA Context Fields Matrix

The MORA limitation of VITA 49.2 Context Fields is shown below in Table 66. The matrix below depicts all context fields that are used for context packets and their associated MORA Signal Resource type. Two fields are simply used for parsing messages and are not specifically describing resources.

Table 66 MORA Context Fields Matrix

CIF	Bit	Field Name	Parser	Context					
				ANT	RFC	RFD	RFT	SDC	Shared
0	31	Context Field Change Indicator	Y						
0	30	Reference Point Identifier		Y					
0	29	Bandwidth			Y			Y	
0	28	IF Reference Frequency					Y		
0	27	RF Reference Frequency					Y		
0	26	RF Reference Frequency Offset						Y	
0	25	IF Band Offset						Y	
0	24	Reference Level						Y	
0	23	Gain			Y				
0	22	Over-Range Count						Y	
0	21	Sample Rate						Y	
0	20	Timestamp Adjustment						Y	
0	19	Timestamp Calibration Time						Y	
0	18	Temperature						Y	
0	16	State and Event Indicators						Y	
0	15	Signal Data Packet Payload Format						Y	
0	8	Context Association Lists						Y	
0	1	CIF 1 Enable	Y						
1	30	Polarization		Y					
1	29	3-D Pointing Vector		Y					
1	28	3-D Pointing Vector Structure		Y					
1	26	Spatial Reference Type		Y					
1	25	Beamwidth		Y					
1	18	1db Compression Point			Y				
1	15	Aux Frequency			Y				Y
1	14	Aux Gain							Y
1	13	Aux Bandwidth			Y				
1	10	Spectrum					Y	Y	
1	9	Sector Scan/Step					Y	Y	
1	7	Index List					Y	Y	
1	6	Discrete I/O 32 bit			Y		Y		Y
1	5	Discrete I/O 64 bit			Y	Y			
1	1	Buffer Status						Y	

6.3.1.5.4 Context Packet Generation Regulations

MORA shall use the VITA 49.2 Context Packet to describe the conditions under which signals were captured or generated. This context-to-signal-pairing applies to both analog and digital signal streams (ports) in a MORA system. With the exception of the Over-Range Count Field (CIF 0/Bit 22), all MORA context fields shall be interpreted to be persistent. That is, the metadata contained in a Context field shall be understood to be *persistent* between Context updates. Therefore, a new context packet shall be sent when fields previously reported have experienced a value change beyond the device's measurement error or repeatability tolerances. Regulations to this effect that appeared in VITA 49.0 (Rule 7.1.5-1) have been omitted in VITA 49.2 with only the spirit contained within normative text in section 7.1.4 of the VITA 49.2 document. For MORA, the VITA 49.0 rule shall apply and is shown below with strikethrough edits for VITA 49.2 consistency.

VITA 49.0 Rule 7.1.5-1: When the Context Packet Stream includes a 'Persistent' Context field, the emitter shall emit a~~n~~ ~~IF~~ Context Packet when the underlying metadata changes. The emitter may emit that Context field more often if desired.

Furthermore, to support non-controlling users who may subscribe to the signal data and/or context multi-cast group(s) at any point in time, a complete context message shall be periodically published at least once a second to enable non-controlling users to have a comprehensive understanding of the contextual conditions for utilizing paired multi-cast signal data streams. The periodicity of the publishing of a complete context message may be more frequent within an

implementation and vary depending upon the level of dynamic resource management utilized for the expected specific use cases.

6.3.1.6 MDM VRT Command Packet Type Specification <48610-20200903, Exp>

The MDM VRT Command Message is based on the VITA 49.2 Command Packet Type "1010" with MORA limitations in the packet header, prologue fields, acknowledge packet subtype variants supported, control/acknowledge mode (CAM) fields, and the control fields supported, as well as the MORA specific definitions for control fields contained in section "MDM VRT Context and Command Fields Specification <48616-20210301, Exp>". MORA additionally defines a specific response to query state requests that is different than the responses required by the VITA 49.2 Standard. These limitations and definitions are documented in this section. All other regulations on Command packets shall be used in accordance with the VITA 49.2 Standard.

The Command Packet Taxonomy figure from the VITA 49.2 Standard has been modified to reflect the MORA limitations and shall be in accordance with Figure 19 below with MORA limitations shown in red. The Execution Acknowledge and Query State Acknowledge packet variants shall not be used in MORA.

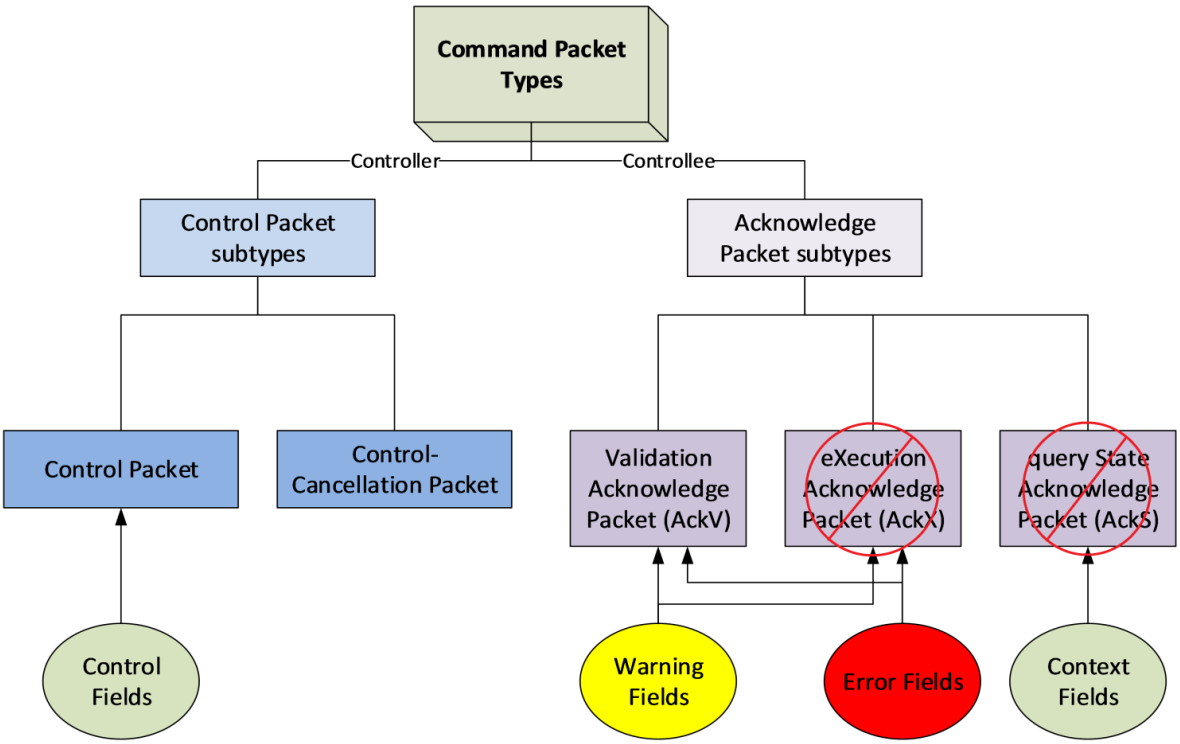

Figure 19 MORA Command Packet Taxonomy

6.3.1.6.1 Command Packet General Format

The VITA 49.2 Command Packet format shall be in accordance with Figure 20 below with MORA limitations shown in red. The Stream Identifier field shall be in accordance with section "MDM VRT Message Structure Specification <48607-20200707, Exp>" above. If the Class Identifier and Timestamp TSI and TSF fields are included, they shall be in accordance with Section "MDM VRT Message Structure Specification <48607-20200707, Exp>" above. MORA shall limit the optional use of Controller and Controllee Identifier fields to the 1 word versions only since UUIDs are exchanged over VDB. This limitation manifests in always setting the values for bits 30 and 28 of the Control/Acknowledge Mode (CAM) field to zero.

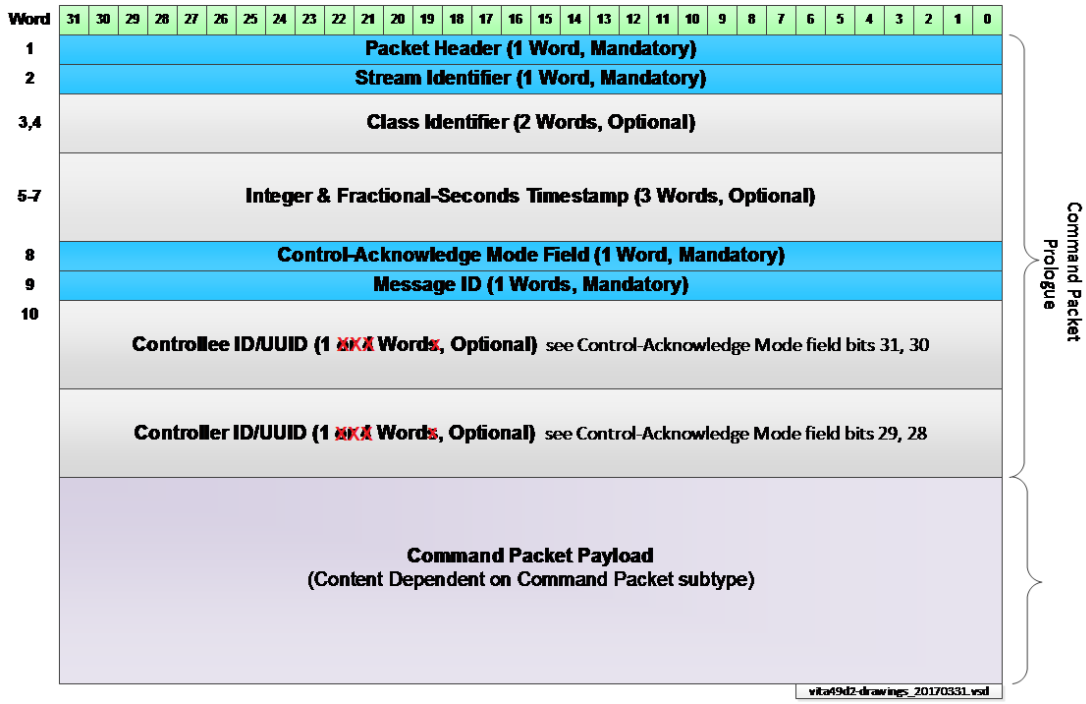

Figure 20 Command Packet Format

6.3.1.6.2 Command Packet Header

The Command Packet Header, as shown below in Table 67, shall be limited by MORA as follows:

- The TSI field (bits 23-22) shall be limited in accordance with Table 35 above
- The TSF field (bits 21-20) shall be limited in accordance with Table 36 above

VRT Packet Header bit fields not appearing below shall be used in accordance with the VITA 49.2 Standard.

Table 67 Command Packet Header

	31	30	29	28	27	26	25	24	23	22	21	20	19	18	17	16	15	14	13	12	11	10	9	8	7	6	5	4	3	2	1	0
1 Word	Packet Type				C	Indicators			TSI		TSF		Packet Count				Packet Size															
	"0"	"1"	"1"	"0"		A	R	L																								

6.3.1.6.3 MORA Command Packet Variants Supported

The MORA limitation of VITA 49.2 Command Packets shall support the Validation Acknowledge packet variant and shall not support Execution and Query State Acknowledge packet variants as depicted in Figure 21 and Figure 22 below with MORA limitations shown in red.

The MORA definition of Context Packet Generation regulations, in section Context Packet Generation Regulations, enforces that a context message shall be sent when any context field value has changed for any reason. This renders the requirement of sending an execution acknowledgement packet as mostly redundant and unnecessarily complicates the parser implementation. Therefore, MORA shall not allow control or control-cancellation packets to request execution acknowledgement (ReqX) packet responses.

The means to query the current status of context is recognized by MORA as an important tool for applications, especially in dynamic tempo environments. However, the response to a status query request can be fully satisfied with the issuance of a context packet with all applicable context fields included. This renders the requirement of sending a Status Acknowledge (AckS) packet as mostly redundant and unnecessarily complicates the parser implementation. Therefore, MORA shall allow control packets to request query status (ReqS) but the response shall come in the form of a complete context packet and shall not precipitate a status acknowledgement packet.

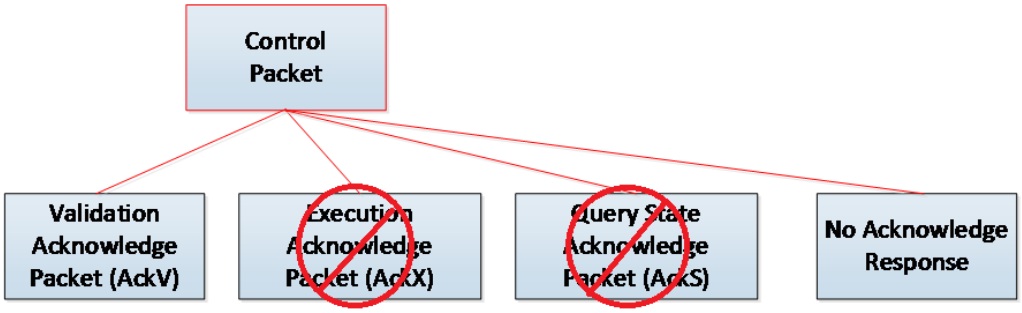

Figure 21 MORA Acknowledge Packet Variants in Response to Control Packets

Since MORA excludes the Execution Acknowledge (AckX) and Query State Acknowledge (AckS) packet variants overall, it is necessary to override the VITA 49.2 Standard regulations that do not allow Validation Acknowledge packet responses to Control-Cancellation packets as shown in Figure 22 below. MORA shall support Control-Cancellation packet requests for Validation Acknowledge (ReqV) packet by generating a Validation Acknowledge packet in response.

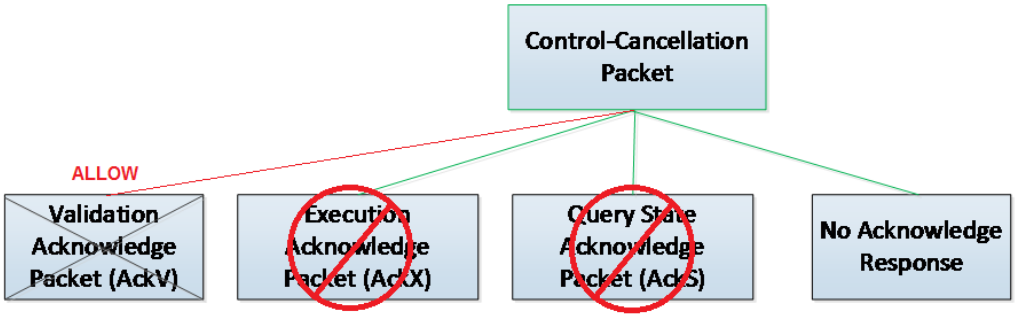

Figure 22 MORA Acknowledge Packet Variants in Response to Control Cancellation Packets

6.3.1.6.4 MORA Control/Acknowledge Mode (CAM) Field for Control Packets

The MORA limitation of VITA 49.2 Control/Acknowledge Mode (CAM) Field for Control Packets shall be in accordance with Table 68 below. For MORA the IE, IR, and ReqX bits in the Control Packet CAM shall always be set to zero.

Table 68 Control/Acknowledge Mode (CAM) Field for Control Packets

	31	30	29	28	27	26	25	24	23	22	21	20	19	18	17	16	15	14	13	12	11	10	9	8	7	6	5	4	3	2	1	0
	Control											Control & Ack									Ack Only				Reserved							
1 Word	CE	IE	CR	IR	P	W	Er	A1	A0	Nack	Res	ReqV	ReqX	ReqS	ReqW	ReqEr	Res	CtrlT2	CtrlT1	CtrlT0	0	0	0	0								
	X	**0**	X	**0**	X	X	X	X	X	X	X	X	**0**	X	X	X	X	X	X	X												

X indicates the bit values vary depending on control and acknowledge settings

6.3.1.6.5 MORA Control/Acknowledge Mode (CAM) Field for Acknowledge Packets

The MORA limitation of VITA 49.2 Control/Acknowledge Mode (CAM) Field for Acknowledge Packets shall be in accordance with Table 69 below. For MORA the IE, IR, AckX, and AckS bits in the Acknowledge Packet CAM shall always be set to zero.

Table 69 Control/Acknowledge Mode (CAM) Field for Acknowledge Packets

	31	30	29	28	27	26	25	24	23	22	21	20	19	18	17	16	15	14	13	12	11	10	9	8	7	6	5	4	3	2	1	0
	Control											Control & Ack									Ack Only				Reserved							
1 Word	CE	IE	CR	IR	P	W	Er	A1	A0	Nack	Res	AckV	AckX	AckS	AckW	AckEr	Res	AckT2	AckT1	AckT0	AckP	SchX	Res	Res								
	X	**0**	X	**0**	X	X	X	X	X	X	X	X	**0**	**0**	X	X	X	X	X	X	X	X	X	X								

X indicates the bit values vary depending on control and acknowledge settings

6.3.1.6.6 MORA Control/Acknowledge Mode (CAM) Field for Control Cancellation Packets

The MORA limitation of VITA 49.2 Control/Acknowledge Mode (CAM) Field for Control Cancellation Packets shall be in accordance with Table 70 below. For MORA the IE, IR, ReqX, and ReqS bits of the Control-Cancellation CAM shall always be set to zero. The ReqV bit shall be used to indicate if a Validation Acknowledge is requested and is modified from the VITA 49.2 Standard to no longer always be set to zero.

Table 70 Control/Acknowledge Mode (CAM) Field for Control Cancellation Packets

	31	30	29	28	27	26	25	24	23	22	21	20	19	18	17	16	15	14	13	12	11	10	9	8	7	6	5	4	3	2	1	0
	Control											Control & Ack									Ack Only				Reserved							
1 Word	CE	IE	CR	IR	P	W	Er	A1	A0	Nack	Res	ReqV	ReqX	ReqS	ReqW	ReqEr	Res	CtrlT2	CtrlT1	CtrlT0	AckP	SchX	Res	Res								
	X	**0**	X	**0**	X	0	0	1	0	X	X	**X**	**0**	**0**	X	X	X	X	X	X	0	0	0	0								

X indicates the bit values vary depending on control and acknowledge settings

6.3.1.6.7 MORA Control Fields Matrix

The MORA limitation of VITA 49.2 Command Fields shall be in accordance with Table 71 below. The matrix below depicts all control fields that are used for command packets and their associated MORA Signal Resource type. Two fields are simply used for parsing messages and are not specifically controlling resources.

Table 71 MORA Control Fields Matrix

CIF	Bit	Field Name	Parser	Control/Ack					
				ANT	RFC	RFD	RFT	SDC	Shared
0	31	Context Field Change Indicator	Y						
0	30	Reference Point Identifier		Y					
0	29	Bandwidth			Y			Y	
0	28	IF Reference Frequency					Y		
0	27	RF Reference Frequency					Y		
0	26	RF Reference Frequency Offset						Y	
0	25	IF Band Offset						Y	
0	24	Reference Level							
0	23	Gain			Y				
0	22	Over-Range Count							

0	21	Sample Rate						Y	
0	20	Timestamp Adjustment							
0	19	Timestamp Calibration Time							
0	18	Temperature							
0	16	State and Event Indicators							
0	15	Signal Data Packet Payload Format						Y	
0	8	Context Association Lists							
0	1	CIF 1 Enable	Y						
1	30	Polarization		Y					
1	29	3-D Pointing Vector		Y					
1	28	3-D Pointing Vector Structure		Y					
1	26	Spatial Reference Type		Y					
1	25	Beamwidth		Y					
1	18	1db Compression Point			Y				
1	15	Aux Frequency			Y				Y
1	14	Aux Gain							Y
1	13	Aux Bandwidth			Y				
1	10	Spectrum					Y	Y	
1	9	Sector Scan/Step					Y	Y	
1	7	Index List					Y	Y	
1	6	Discrete I/O 32 bit			Y		Y		Y
1	5	Discrete I/O 64 bit			Y	Y			
1	1	Buffer Status							

6.3.2 MDM Acknowledgement Message (Type 2) Specification <48611-20180928, Exp>

The MDM Acknowledgement Message shall be used to provide a positive acknowledgement to the sender of certain MDMs that a specific message (as indicated by the MDM SEQUENCE NUMBER) was received and validated by the recipient. In addition to delivery confirmation functionality, the MDM Type 2 also provides a means by which the recipient may further delineate success or failure in executing the delivered message.

Table 72 MDM Acknowledgement Message Format

32-bits			
16-bits		16-bits	
8-bits	8-bits	8-bits	8-bits
MDM PREAMBLE			RESPONSE
VERSION MAJ	VERSION MIN	MDM SEQUENCE NUMBER	
ML2B INTERFACE ID			
MDM TYPE		NUMBER OF MESSAGES	

The MDM Acknowledgement Message format shall be in accordance with Table 72 above. The MDM Type 2 header fields, except for the RESPONSE field, are described in section "MDM Encapsulation Specification <48606-20201002, Exp>" above. The RESPONSE field is defined below.

<u>MDM Response (8 bits)</u>
The MDM Response Bit Field shall be an 8-bit field with the bit field in accordance with Table 73 below.

Table 73 MDM Acknowledgement Message Response Bit Field

8-bits							
r	UU	US	RU	IR	IF	IM	A
R	R	R	R	R	R	R	R

The definition of the encoding of the RESPONSE field shall be in accordance with Table 74 below.

Table 74 MDM Acknowledgement Response Meaning

Response Value	Response Definition	Response Meaning	Notional Behavior
No Response Received	No Response Received	Error - when no response received after a period of time	If no response is received after [NoResponseTimeInterval]*, retransmit up to [maxTimes]* and once [maxTimes]* is achieved with the same result, it becomes a hard error. Sequence numbers tracked until removed (see Response Values 1 and 32 below).
"00000001" (1)	Acknowledged (A)	Success - message shall be executed	Delete the exact sequence from tracking, and if the exact sequence was a retransmission, also delete associated prior transmission sequence numbers
"00000010" (2)	Invalid Message (IM)	Error - message shall not be executed due to an unrecognized message type or message content	Sequence numbers tracked until removed. Retransmit up to [maxTimes]* and once [maxTimes]* achieves same result it becomes (Hard Error) and sequence number(s) is/are deleted from tracking
"00000100" (4)	Invalid Function (IF)	Error - message shall not be executed due to a functional discrepancy with the specified resource	Hard error - delete sequence number(s) from tracking
"00001000" (8)	Invalid Range (IR)	Error - message shall not be executed due to a range discrepancy with the specified resource	Hard error - delete sequence number(s) from tracking
"00010000" (16)	Resource Unavailable (RU)	Error - message shall not be executed due to the specified resource being unavailable	Sequence numbers tracked until removed. Retransmit up to [maxTimes]* and once [maxTimes]* achieves same result it becomes a hard error and is deleted from tracking
"00100000" (32)	Unexpected Sequence Number (US)	Success - message shall be executed but out of sequence noted.	Delete the exact sequence from tracking, and if the exact sequence was a retransmission, also delete associated prior transmission sequence numbers.
"01000000" (64)	Unauthorized User (UU)	Error - message shall not be executed due to sender not being a current authorized user	Hard error - delete sequence number(s) from tracking
All Other Values	Reserved	Future Use	

*-Variable properties of [maxTimes] and [NoResponseTimeInterval] in the table above are implementation specific.

6.3.3 MDM Time of Day Message (Type 3) Specification <48612-20170531, Exp>

Table 75 MDM Time of Day Message Format

32-bits			
16-bits		16-bits	
8-bits	8-bits	8-bits	8-bits
MDM PREAMBLE			SEND-ACK
VERSION MAJ	VERSION MIN	MDM SEQUENCE NUMBER	
ML2B INTERFACE ID			

MDM TYPE	NUMBER OF MESSAGES
Time of Day Field	

The MDM Time of Day Message shall be used to communicate the time of day with one second resolution to the MORA Signal Port Manager component type in support of UTC time of day knowledge synchronized to a one pulse per second reference signal. The MDM Time of Day Message format shall be in accordance with Table 75 above. The MDM Type 3 header fields are described in section "MDM Encapsulation Specification <48606-20201002, Exp>" above. The MDM Type 3 data message field is described below.

Time of Day Field (32 bits)
The MDM Time of Day Field shall be the same as the VITA 49.2 Timestamp Integer Field in accordance with Table 76 below.

Table 76 MDM Time of Day Field

32-bits																															
u	u	u	u	u	u	u	u	u	u	u	u	u	u	u	u	u	u	u	u	u	u	u	u	u	u	u	u	u	u	u	u

The value in the MDM Time of Day Field shall be the MORA UTC Time of Day to a one second resolution (UTC = seconds, including leap seconds, since midnight January 1st, 1970, Greenwich Mean Time.)

6.3.4 MDM Signal Port User ID Message (Type 4) Specification <48613-20201002, Exp>

Table 77 MDM Signal Port User ID Message Format

32-bits			
16-bits		16-bits	
8-bits	8-bits	8-bits	8-bits
MDM PREAMBLE			SEND-ACK
VERSION MAJ	VERSION MIN	MDM SEQUENCE NUMBER	
ML2B INTERFACE ID			
MDM TYPE		NUMBER OF MESSAGES	
Signal Port User ID Field			
User ML2B Command IP Address Field 1			
User ML2B Command IP Address Field 2			
User ML2B Command IP Address Field 3			
User ML2B Command IP Address Field 4			
User ML2B Command MAC			
User ML2B Command MAC		User ML2B Command UDP Port	
User ML2B Signal Data IP Address Field 1			
User ML2B Signal Data IP Address Field 2			
User ML2B Signal Data IP Address Field 3			
User ML2B Signal Data IP Address Field 4			
User ML2B Signal Data MAC			
User ML2B Signal Data MAC		User ML2B Signal Data UDP Port	
User ML2B Context IP Address Field 1			
User ML2B Context IP Address Field 2			
User ML2B Context IP Address Field 3			
User ML2B Context IP Address Field 4			
User ML2B Context MAC			
User ML2B Context MAC		User ML2B Context UDP Port	

The MDM Signal Port User ID Message shall be used as follows:

- To communicate to a MORA Signal Port Manager component type that a reservation or release of a signal port has been received by its MORA Signal Resource Manager component type.
- To communicate to a MORA Signal Port Manager Client that a signal port reservation or release has been received by a MORA Signal Port Manager component type.
- To communicate to a MORA Signal Resource Manager component type that a signal port release has occurred due to a failure to receive an initial, complete control message at its MORA Signal Port Manager component type.

The MDM Signal Port User ID Message format shall be in accordance with Table 77 above. The MDM Type 4 header fields are described in section "MDM Encapsulation Specification <48606-20201002, Exp>" above. The MDM Type 4 data message fields are described below.

Signal Port User ID Field (32 bits)
The Signal Port User ID field shall be a 32-bit field in accordance with Table 78 below.

Table 78 Signal Port User ID Field Format

32-bits																															
16-bits																16-bits															
8-bits								8-bits								8-bits								8-bits							
31	30	29	28	27	26	25	24	23	22	21	20	19	18	17	16	15	14	13	12	11	10	9	8	7	6	5	4	3	2	1	0
SIGNAL PORT RESOURCE ID																USER ID															

Signal Port Resource ID Subfield (16 bits)
The Signal Port Resource ID subfield (SIGNAL PORT RESOURCE ID) shall contain the identification of the resource being assigned to, or released from, a user. This includes the resource's Device Type, Device ID, and Signal Port ID. The bit fields within the SIGNAL PORT RESOURCE ID subfield shall be in accordance with Table 79 below.

User ID Subfield (16 bits)
The User ID subfield (USER ID) shall contain the identification of the user being assigned to a resource. This includes the user's Device Type, Device ID, and Signal Port ID. If the message is being sent to identify a release, the User ID subfield shall be set to all zeros. Releases shall only be considered valid if coming from the same ML2B INTERFACE ID that made the reservation. The bit fields within the USER ID subfield shall be in accordance with Table 79 below.

Table 79 Signal Port Resource ID and User ID Bit Fields

16-bits															
8-bits								8-bits							
15	14	13	12	11	10	9	8	7	6	5	4	3	2	1	0
TYPE			DEVICE ID					SIGNAL PORT ID							

To reflect a multi-client reservation, multiple Type 4 MDMs shall be sent with the same Signal Port Resource ID Subfield and the corresponding non-zero values for User ID Subfield and their associated transport configuration for each client. If at any time a Type 4 MDM is received with the User ID Subfield set to zero, then all clients party to the specified Signal Port Resource ID reservation shall be released.

Device Type (3 bits)
The Device Type bit field (TYPE) shall be a 3-bit, unsigned integer that specifies the Device Type. Table 40 contains the list of ID-Device Types. All bits in a USER ID subfield shall be set to zero if the message is a signal port release.

Device ID (6 bits)

The Device ID bit field (DEVICE ID) shall be a 6-bit, unsigned integer that specifies the number of the ID-Device Type; MORA systems may contain up to 63 of the same ID-Device Types (e.g., 63 RHDs, 63 SDRs, etc.). All bits in a USER ID subfield shall be set to zero if the message is a signal port release.

Signal Port ID (7 bits)
The Signal Port ID bit field (SIGNAL PORT ID) shall be a 7-bit, unsigned integer that specifies the ID of the Signal Port of the DEVICE ID. If the SIGNAL PORT ID is zero, then a Signal Port is not specified and the message shall pertain to the device level. Otherwise it shall be the ID of the device's Signal Port from 1 to 127. All bits in a USER ID subfield shall be set to zero if the message is a signal port release.

User ML2B Command IP Address Field 1 (32 bits)
The ML2B Command IP Address Field 1 shall be either the IPV4 address or the 13th-16th octet of the IPV6 address of the user for Commands.

User ML2B Command IP Address Field 2 (32 bits)
The ML2B Command IP Address Field 2 shall be zero if using an IPV4 address or the 9th-12th octet of the IPV6 address of the user for Commands.

User ML2B Command IP Address Field 3 (32 bits)
The ML2B Command IP Address Field 3 shall be zero if using an IPV4 address or the 5th-8th octet of the IPV6 address of the user for Commands.

User ML2B Command IP Address Field 4 (32 bits)
The ML2B Command IP Address Field 4 shall be zero if using an IPV4 address or the 1st-4th octet of the IPV6 address of the user for Commands.

User ML2B Command MAC (32 bits)
The User ML2B Command MAC shall be the 3rd-6th octets of the MAC address of the user for Commands.

User ML2B Command MAC (16 bits)
The User ML2B Command MAC shall be the 1st and 2nd octets of the MAC address of the user for Commands.

User ML2B Command UDP Port (16 bits)
The User ML2B Command UDP Port shall be the UDP port of the user for Commands.

User ML2B Signal Data IP Address Field 1 (32 bits)
The User ML2B Signal Data IP Address Field 1 shall be either the IPV4 address or the 13th-16th octet of the IPV6 address of the user for Signal Data. If this field is not applicable (such as analog signal port use cases) it may be set to zero.

User ML2B Signal Data IP Address Field 2 (32 bits)
The User ML2B Signal Data IP Address Field 2 shall be zero if using an IPV4 address or the 9th-12th octet of the IPV6 address of the user for Signal Data. If this field is not applicable (such as for analog signal port use cases) it may be set to zero.

User ML2B Signal Data IP Address Field 3 (32 bits)
The User ML2B Signal Data IP Address Field 3 shall be zero if using an IPV4 address or the 5th-8th octet of the IPV6 address of the user for Signal Data. If this field is not applicable (such as for analog signal port use cases) it may be set to zero.

User ML2B Signal Data IP Address Field 4 (32 bits)

The User ML2B Signal Data IP Address Field 4 shall be zero if using an IPV4 address or the 1st-4th octet of the IPV6 address of the user for Signal Data. If this field is not applicable (such as for analog signal port use cases) it may be set to zero.

User ML2B Signal Data MAC (32 bits)
The User ML2B Signal Data MAC shall be the 3rd-6th octets of the MAC address of the user for Signal Data. If this field is not applicable (such as for analog signal port use cases) it may be set to zero.

User ML2B Signal Data MAC (16 bits)
The User ML2B Signal Data MAC shall be the 1st and 2nd octets of the MAC address of the user for Signal Data. If this field is not applicable (such as for analog signal port use cases) it may be set to zero.

User ML2B Signal Data UDP Port (16 bits)
The User ML2B Signal Data UDP Port shall be the UDP port of the user for Signal Data. If this field is not applicable (such as for analog signal port use cases) it may be set to zero.

User ML2B Context IP Address Field 1 (32 bits)
The User ML2B Context IP Address Field 1 shall be either the IPV4 address or the 13th-16th octet of the IPV6 address of the user for Context.

User ML2B Context IP Address Field 2 (32 bits)
The User ML2B Context IP Address Field 2 shall be zero if using an IPV4 address or the 9th-12th octet of the IPV6 address of the user for Context.

User ML2B Context IP Address Field 3 (32 bits)
The User ML2B Context IP Address Field 3 shall be zero if using an IPV4 address or the 5th-8th octet of the IPV6 address of the user for Context.

User ML2B Context IP Address Field 4 (32 bits)
The User ML2B Context IP Address Field 4 shall be zero if using an IPV4 address or the 1st-4th octet of the IPV6 address of the user for Context.

User ML2B Context MAC (32 bits)
The User ML2B Context MAC shall be the 3rd-6th octets of the MAC address of the user for Context.

User ML2B Context MAC (16 bits)
The User ML2B Context MAC shall be the 1st and 2nd octets of the MAC address of the user for Context.

User ML2B Context UDP Port (16 bits)
The User ML2B Context UDP Port shall be the UDP port of the user for Context.

6.3.5 MDM Health Message (Type 5) Specification <48614-20200707, Exp>

Table 80 MDM Health Message Format

32-bits			
16-bits		16-bits	
8-bits	8-bits	8-bits	8-bits
MDM PREAMBLE			SEND-ACK
VERSION MAJ	VERSION MIN	MDM SEQUENCE NUMBER	
ML2B INTERFACE ID			
MDM TYPE		NUMBER OF MESSAGES	
Health Status Field 1			
Health Status Field 2			

The MDM Health Message shall be used by the MORA Signal Port Manager component type to communicate its operational status, including normal, warnings, and failures for various parameters to the MORA Device and MORA Signal Resource Manager component types. The MDM Health Message format shall be in accordance with Table 80 above. The MDM Type 5 header fields are described in section "MDM Encapsulation Specification <48606-20201002, Exp>" above. The MDM Type 5 data message fields are described below.

The MDM Type 5 shall be used in one of two methods. The first method shall describe a single Operational Parameter and corresponding Parameter Condition. In the second method, the Operational State shall be used to convey the status of all monitored parameters in a single value which maps to an implementation-specific matrix corresponding to all monitored parameters and parameter conditions.

When Operational State is not used, it shall be set to zero. When Operational State is used, the Port ID, Operational Parameter, and Parameter Conditions shall be set to zero. If the Operational State includes any failures, the Alert Type shall be set to Failure. If the Operational State does not include any failures, but does include warnings, the Alert Type shall be set to Warning. If the Operational State includes neither failures nor warnings, the Alert Type shall be set to Normal.

A Health Status message with Fields #1 and #2 both set to zero shall be used to communicate device-level (all Signal Ports) normal operation (i.e. heartbeat).

<u>Health Status Field #1 (32 bits)</u>
The Health Status field #1 includes the Alert Type, Signal Port ID (or device-level), and the Operational Parameter to which the alert applies. The Health Status field #1 format and meaning shall be in accordance with Figure 23 below.

Alert Type		Port ID							Operational Parameter																							
									r	r	r	r	r	r	r	r	r	r	r	r	P	N	T	C	S	B	M	R	L	P	T
T	T	P	P	P	P	P	P	P	O	O	O	O	O	O	O	O	O	O	O	O	O	O	O	O	O	O	O	O	O	O	O	O

T = Alert Type
00 = Normal
01 = Warning
10 = Failure
11 = Reserved

P = PORT #
0000000 = Device
0000001 = Port #1
●
●
●
1111111 = Port #127

O = Operational Parameter (other values not allowed)
000000000000000000000000 = Not Used
000000000000000000000001 = Temperature
000000000000000000000010 = Power Supply
000000000000000000000100 = Local Oscillator
000000000000000000001000 = RF Path
000000000000000000010000 = Memory
000000000000000000100000 = Buffer
000000000000000001000000 = Interface Stack
000000000000000010000000 = Cooling (i.e. Fan)
000000000000000100000000 = Time
000000000000001000000000 = Navigation
000000000000010000000000 = Position
000000000000100000000000 = Reserved
000000000001000000000000 = Reserved
000000000010000000000000 = Reserved
000000000100000000000000 = Reserved
000000001000000000000000 = Reserved
000000010000000000000000 = Reserved
000000100000000000000000 = Reserved
000001000000000000000000 = Reserved
000010000000000000000000 = Reserved
000100000000000000000000 = Reserved
001000000000000000000000 = Reserved
010000000000000000000000 = Reserved
100000000000000000000000 = Reserved

Figure 23 Health Status Field #1 Format

Since the construct above supports only device or signal port level status updates, health status messages related to switch group resources shall be communicated at the device level if all signal ports are affected by the switch group status, or shall be communicated at the signal port level for each signal port affected by the switch group status.

Health Status Field #2 (32 bits)

The Health Status field #2 includes an Operational State and Parameter Condition. Health Status field #2 format and meaning shall be in accordance with Figure 24 below.

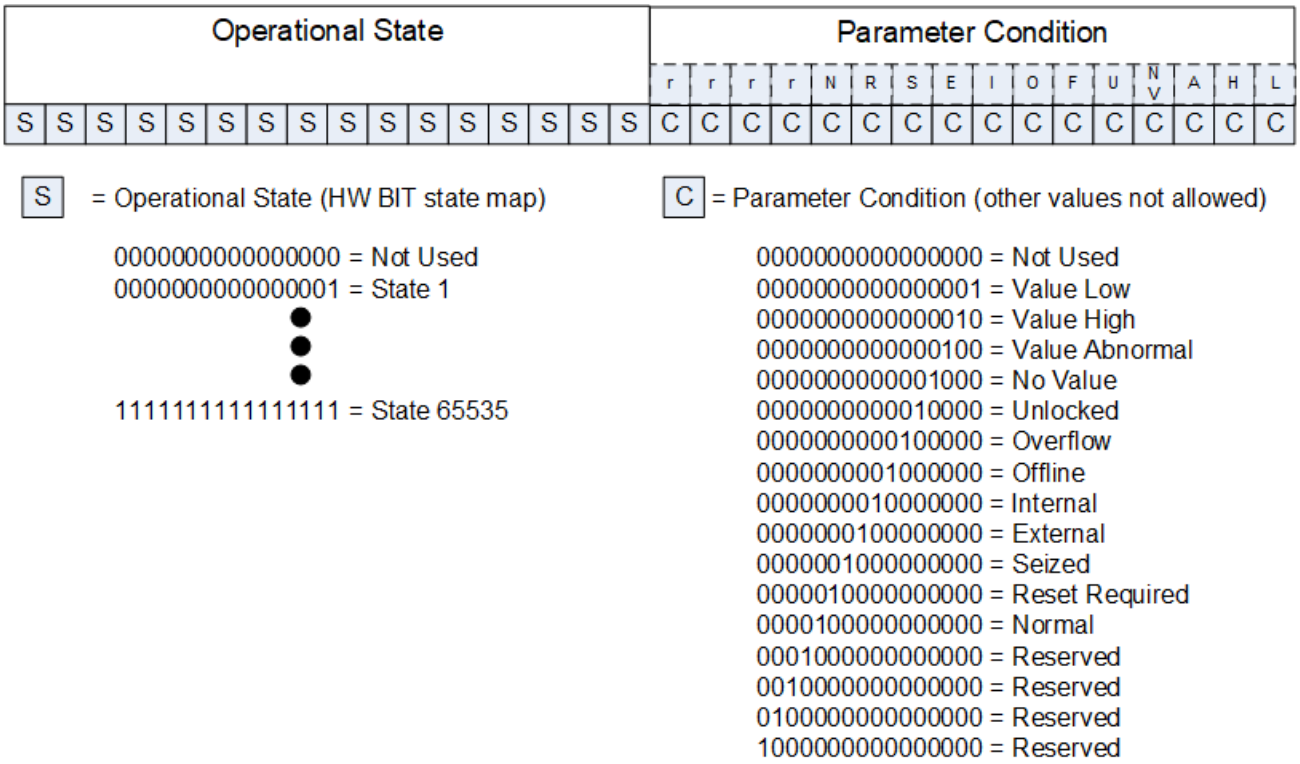

Figure 24 Health Status Field #2 Format

6.3.6 MDM Command Message (Type 6) Specification <48615-20200707, Exp>

Table 81 MDM Command Message Format

32-bits			
16-bits		16-bits	
8-bits	8-bits	8-bits	8-bits
MDM PREAMBLE			SEND-ACK
VERSION MAJ	VERSION MIN	MDM SEQUENCE NUMBER	
ML2B INTERFACE ID			
MDM TYPE		NUMBER OF MESSAGES	
Command Field			
Configuration Field			
Waveform Operation Field			

The MDM Command Message shall be used to communicate to the MORA Signal Port Manager component type that a ”Send Command” has been received by the MORA Device component type which results in a device state change or when the device state has organically changed (e.g. FAULT state). The MDM Command Message shall also be used to communicate to the MORA Signal Port Manager component type that a “Set Current MORA Configuration” has been received by the MORA Device component type. Thirdly, the MDM Command Message shall be used to communicate to the MORA Signal Port Manager component type that a “Set Current Waveform Operation” has been received by the MORA Device component type. The MDM Command Message format shall be in accordance with Table 81 above. The MDM Type 6 header fields are described in section “MDM Encapsulation Specification <48606-20201002, Exp>” above. The MDM Type 6 data message fields are described below.

Command Field (32 bits)
The Command field format and meaning shall be in accordance with Figure 25 below.

Port ID							Command																									
							r	r	r	r	r	r	r	r	r	r	r	r	r	RB	FA	SA	ZE	MM	RS	SD	PO	TI	SB	OP
P	P	P	P	P	P	P	C	C	C	C	C	C	C	C	C	C	C	C	C	C	C	C	C	C	C	C	C	C	C	C	C	C

P = PORT #

0000000 = Device
0000001 = Port #1
●
●
●
1111111 = Port #127

C = Command (other values not allowed)

000000000000000000000000 = Not Present
000000000000000000000001 = Operate
000000000000000000000010 = Standby
000000000000000000000100 = Transmit Inhibit
000000000000000000001000 = Power On
000000000000000000010000 = Shut Down
000000000000000000100000 = Restart
000000000000000001000000 = Maintenance Mode
000000000000000010000000 = Zeroize
000000000000000100000000 = Sanitize
000000000000001000000000 = Fault
000000000000010000000000 = Run BIT
000000000000100000000000 = Reserved
000000000001000000000000 = Reserved
000000000010000000000000 = Reserved
000000000100000000000000 = Reserved
000000001000000000000000 = Reserved
000000010000000000000000 = Reserved
000000100000000000000000 = Reserved
000001000000000000000000 = Reserved
000010000000000000000000 = Reserved
000100000000000000000000 = Reserved
001000000000000000000000 = Reserved
010000000000000000000000 = Reserved
100000000000000000000000 = Reserved

Figure 25 Command Field Format

Configuration Field (32 bits)

The Configuration field format and meaning shall be in accordance with Figure 26 below.

Configuration																															
D	D	D	D	D	D	D	D	D	D	D	D	D	D	D	D	D	D	D	D	D	D	D	D	D	D	D	D	D	D	D	D

D = Configuration ID

00000000000000000000000000000000 = Not Present
00000000000000000000000000000001 = Configuration ID #1
●
●
●
11111111111111111111111111111111 = Configuration ID #4,294,967,295

Figure 26 Configuration Field Format

Waveform Operation Field (32 bits)

The Waveform Operation field format and meaning shall be in accordance with Figure 27 below.

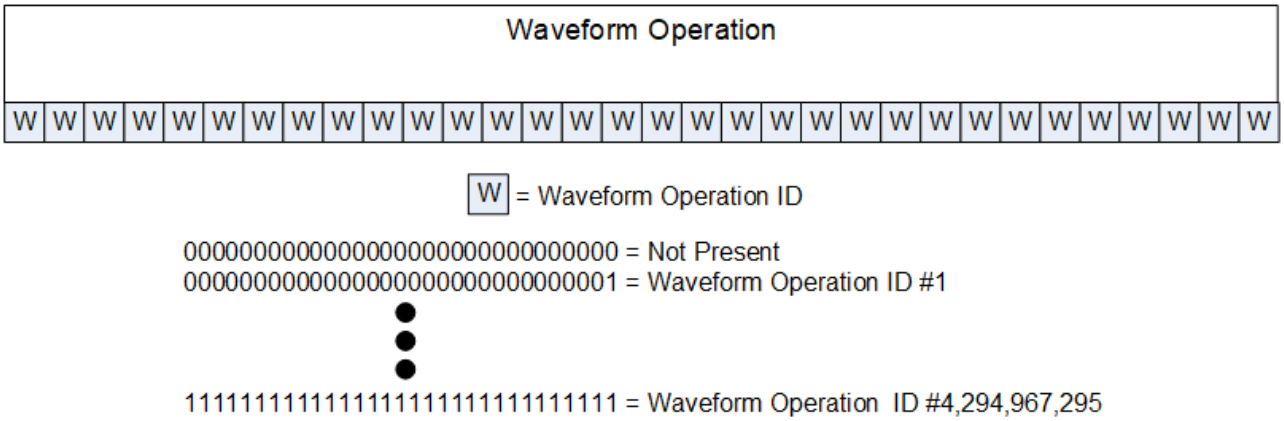

Figure 27 Waveform Operation Field Format

6.3.7 MDM Switch Group User ID Message (Type 7) Specification <48617-20200707, Exp>

Table 82 MDM Switch Group User ID Message Format

32-bits			
16-bits		16-bits	
8-bits	8-bits	8-bits	8-bits
MDM PREAMBLE			SEND-ACK
VERSION MAJ	VERSION MIN	MDM SEQUENCE NUMBER	
ML2B INTERFACE ID			
MDM TYPE		NUMBER OF MESSAGES	
Switch Group User ID Field			
User ML2B Command IP Address Field 1			
User ML2B Command IP Address Field 2			
User ML2B Command IP Address Field 3			
User ML2B Command IP Address Field 4			
User ML2B Command MAC			
User ML2B Command MAC		User ML2B Command UDP Port	
User ML2B Context IP Address Field 1			
User ML2B Context IP Address Field 2			
User ML2B Context IP Address Field 3			
User ML2B Context IP Address Field 4			
User ML2B Context MAC			
User ML2B Context MAC		User ML2B Context UDP Port	

The MDM Switch Group User ID Message shall be used as follows:

- To communicate to a MORA Signal Port Manager component type that a reservation or release of a switch group has been received by its MORA Signal Resource Manager component type.
- To communicate to a MORA Signal Port Manager Client that a switch group reservation or release has been received by a MORA Signal Port Manager component type.
- To communicate to a MORA Signal Resource Manager component type that a switch group release has occurred due to a failure to receive an initial, complete control message at its MORA Signal Port Manager component type.

The MDM Switch Group User ID Message format shall be in accordance with Table 82 above. The MDM Type 7 header fields are described in section "MDM Encapsulation Specification <48606-20201002, Exp>" above. The MDM Type 7 data message fields are described below.

Switch Group User ID Field (32 bits)
The Switch Group User ID field shall be a 32-bit field in accordance with Table 83 below.

Table 83 Switch Group User ID Field Format

32-bits																															
16-bits																16-bits															
8-bits								8-bits								8-bits								8-bits							
31	30	29	28	27	26	25	24	23	22	21	20	19	18	17	16	15	14	13	12	11	10	9	8	7	6	5	4	3	2	1	0
SWITCH GROUP RESOURCE ID																USER ID															

Switch Group Resource ID Subfield (16 bits)
The Switch Group Resource ID subfield (SWITCH GROUP RESOURCE ID) shall contain the identification of the switch group being assigned to, or released from, a user. This includes the resource's Device Type, Device ID, and Switch Group ID. The bit fields within the SWITCH GROUP RESOURCE ID subfield shall be in accordance with Table 84 below.

Table 84 Switch Group Resource ID Bit Field

16-bits															
8-bits								8-bits							
15	14	13	12	11	10	9	8	7	6	5	4	3	2	1	0
TYPE			DEVICE ID					SWITCH GROUP ID							

Device Type (3 bits)
The Device Type bit field (TYPE) shall be a 3-bit, unsigned integer that specifies the Device Type. Table 40 contains the list of ID-Device Types.

Device ID (6 bits)
The Device ID bit field (DEVICE ID) shall be a 6-bit, unsigned integer that specifies the number of the ID-Device Type; MORA systems may contain up to 63 of the same ID-Device Types (e.g., 63 RHDs, 63 SDRs, etc.).

Switch Group ID (7 bits)
The Switch Group ID bit field (SWITCH GROUP ID) shall be a 7-bit, unsigned integer that specifies the ID of the Switch Group of the DEVICE ID. If the SWITCH GROUP ID is zero, then a Switch Group is not specified and the message shall pertain to the device level. Otherwise it shall be the ID of the device's Switch Group from 1 to 127.

To reflect a multi-client reservation, multiple Type 7 MDMs shall be sent with the same Switch Group Resource ID Subfield and the corresponding non-zero values for User ID Subfield and their associated transport configuration for each client. If at any time a Type 7 MDM is received with the User ID Subfield set to zero, then all clients party to the specified Switch Group Resource ID reservation shall be released.

User ID Subfield (16 bits)
The User ID subfield (USER ID) shall contain the identification of the user being assigned to a resource. This includes the user's Device Type, Device ID, and Signal Port ID. If the message is being sent to identify a release, the User ID Subfield shall be set to all zeros. Releases shall only be considered valid if coming from the same ML2B INTERFACE ID that made the reservation. The bit fields within the USER ID subfield shall be in accordance with Table 85 below.

Table 85 User ID Bit Field

16-bits															
8-bits								8-bits							
15	14	13	12	11	10	9	8	7	6	5	4	3	2	1	0
TYPE			DEVICE ID						SIGNAL PORT ID						

Device Type (3 bits)
The Device Type bit field (TYPE) shall be a 3-bit, unsigned integer that specifies the Device Type. Table 40 contains the list of ID-Device Types. All bits in a USER ID subfield shall be set to zero if the message is a switch group release.

Device ID (6 bits)
The Device ID bit field (DEVICE ID) shall be a 6-bit, unsigned integer that specifies the number of the ID-Device Type; MORA systems may contain up to 63 of the same ID-Device Types (e.g., 63 RHDs, 63 SDRs, etc.). All bits in a USER ID subfield shall be set to zero if the message is a switch group release.

Signal Port ID (7 bits)
The Signal Port ID bit field (SIGNAL PORT ID) shall be a 7-bit, unsigned integer that specifies the ID of the Signal Port of the DEVICE ID. If the SIGNAL PORT ID is zero, then a Signal Port is not specified and the message shall pertain to the device level. Otherwise it shall be the ID of the device's Signal Port from 1 to 127. All bits in a USER ID subfield shall be set to zero if the message is a switch group release.

User ML2B Command IP Address Field 1 (32 bits)
The ML2B Command IP Address Field 1 shall be either the IPV4 address or the 13th-16th octet of the IPV6 address of the user for Commands.

User ML2B Command IP Address Field 2 (32 bits)
The ML2B Command IP Address Field 2 shall be zero if using an IPV4 address or the 9th-12th octet of the IPV6 address of the user for Commands.

User ML2B Command IP Address Field 3 (32 bits)
The ML2B Command IP Address Field 3 shall be zero if using an IPV4 address or the 5th-8th octet of the IPV6 address of the user for Commands.

User ML2B Command IP Address Field 4 (32 bits)
The ML2B Command IP Address Field 4 shall be zero if using an IPV4 address or the 1st-4th octet of the IPV6 address of the user for Commands.

User ML2B Command MAC (32 bits)
The User ML2B Command MAC shall be the 3rd-6th octets of the MAC address of the user for Commands.

User ML2B Command MAC (16 bits)
The User ML2B Command MAC shall be the 1st and 2nd octets of the MAC address of the user for Commands.

User ML2B Command UDP Port (16 bits)
The User ML2B Command UDP Port shall be the UDP port of the user for Commands.

User ML2B Context IP Address Field 1 (32 bits)
The User ML2B Context IP Address Field 1 shall be either the IPV4 address or the 13th-16th octet of the IPV6 address of the user for Context.

User ML2B Context IP Address Field 2 (32 bits)

The User ML2B Context IP Address Field 2 shall be zero if using an IPV4 address or the 9th-12th octet of the IPV6 address of the user for Context.

User ML2B Context IP Address Field 3 (32 bits)
The User ML2B Context IP Address Field 3 shall be zero if using an IPV4 address or the 5th-8th octet of the IPV6 address of the user for Context.

User ML2B Context IP Address Field 4 (32 bits)
The User ML2B Context IP Address Field 4 shall be zero if using an IPV4 address or the 1st-4th octet of the IPV6 address of the user for Context.

User ML2B Context MAC (32 bits)
The User ML2B Context MAC shall be the 3rd-6th octets of the MAC address of the user for Context.

User ML2B Context MAC (16 bits)
The User ML2B Context MAC shall be the 1st and 2nd octets of the MAC address of the user for Context.

User ML2B Context UDP Port (16 bits)
The User ML2B Context UDP Port shall be the UDP port of the user for Context.

7 MORA SYSTEM REFERENCE DESIGN

7.1 Overview

MORA enables flexibility in system design. The system reference design described in the following sections provides an example implementation that supports multiple mission capabilities. VICTORY services provide resource management and assignment over the VDB. The ML2B provides ultra-low latency tasking and control of the MORA RF layer as well as high volume digital RF data.

7.2 Common Hardware for Multiple Missions

Figure 28 illustrates a MORA system reference design consisting of two SDRs and two RHDs connected using a single RCD. This reference configuration demonstrates the ability to use the same hardware, running different RF applications, to conduct various missions such as EW and communications.

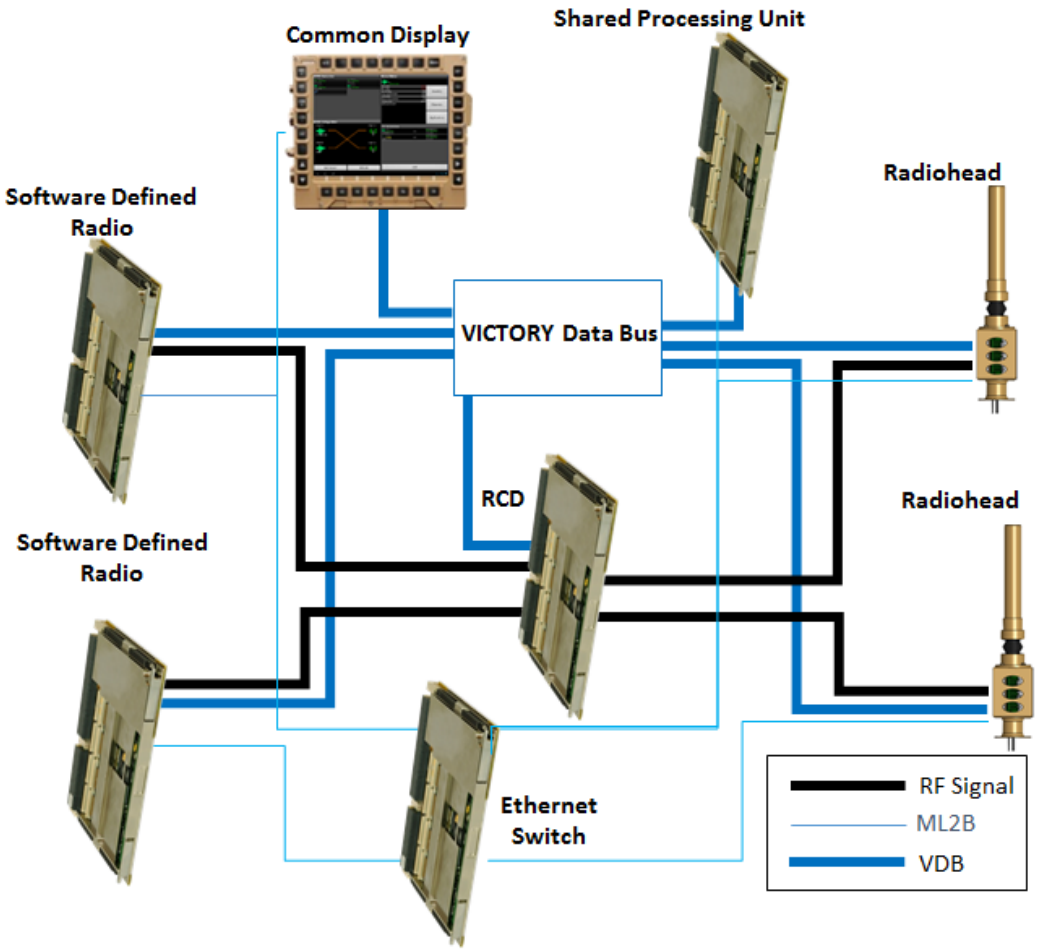

Figure 28 MORA Reference Design

7.3 MORA System Sequence Diagrams

The following sequence diagrams capture the messaging within the MORA reference design. Sequence diagrams such as initial component discovery, retrieval of component capability, and component tasking are provided. These sequence diagrams highlight component functionality and identify proper messages for resource assignment and control. They are intended to be conceptual in nature and not fully representative of the entire message exchange as all the message details are not included in the examples for the sake of brevity. Actual implementations are to be compliant with the regulations as stipulated in the section SPECIFICATIONS.

Management of the signal resources is accomplished over both the VDB and ML2B. MORA web services provided over the VDB are used for general resource management and assignment. VDB messages are identified as green arrows in the sequence diagrams. In addition to VDB messages, real-time radio transport operations are executed using MDMs. MDMs are identified as blue arrows in the sequence diagrams below. The arguments for VDB request messages are shown in parentheses.

7.3.1 Component Discovery

Figure 29 illustrates the process for a component to identify existing web service endpoints over the VDB. This discovery follows the process described in the "Zero Configuration Networking" section of the VICTORY Standard Specifications and is consistent among all component types. For further information, consult the VICTORY specification using the spec tag listed previously.

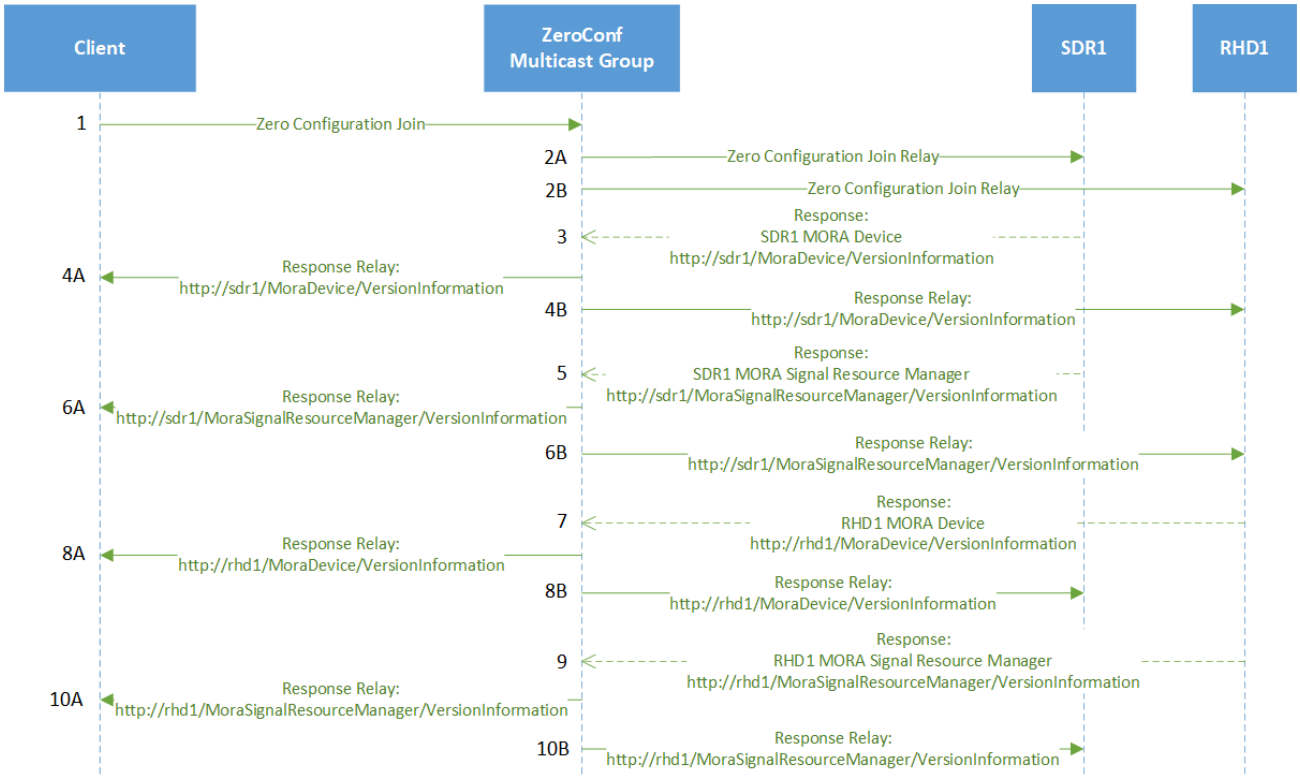

Figure 29 Component Discovery

The figure above assumes that SDR1 and RHD1 hosts have already joined the Zeroconf multicast group. The following is an in-depth explanation of the sequence of messages in Figure 29 above.

1. Zero Configuration Join

   a. The MORA client joins the zero-configuration multicast group via some API or zero configuration library like Apple©, Bonjour, or JmDNS.
2. Zero Configuration Join Relay
   a. The join request is multicast to SDR1.
   b. The join request is multicast to RHD1.
3. Response
   a. SDR1's MORA Device responds to the group with the service name and URL of its VICTORY Version Information web service endpoint.
4. Response Relay
   a. SDR1 response is multicast to the Client.
   b. SDR1 response is multicast to RHD1.
5. Response
   a. SDR1's MORA Signal Resource Manager responds to the group with the service name and URL of its VICTORY Version Information web service endpoint.
6. Response Relay
   a. SDR1 response is multicast to the Client.
   b. SDR1 response is multicast to RHD1.
7. Response
   a. RHD1's MORA Device responds to the group with the service name and URL of its VICTORY Version Information web service endpoint.
8. Response Relay
   a. The RHD1 response is multicast to the Client.
   b. The RHD1 response is multicast to SDR1.
9. Response
   a. RHD1's MORA Signal Resource Manager responds to the group with the service name and URL of its VICTORY Version Information web service endpoint.
10. Response Relay
   a. The RHD1 response is multicast to the Client.
   b. The RHD1 response is multicast to SDR1's MORA Device.

7.3.2 Discovering Available Web Service Interfaces on VICTORY Data Bus

Once a component's version information endpoint is discovered, a client must query the version information web service to obtain the web service endpoints for other web service interfaces present on the device. Figure 30 illustrates the web service call that will enable the client to learn of all the MORA web service interfaces on the device. This diagram is an example of how to implement the "Version Information Management Parameters" section of the VICTORY Standard Specifications.

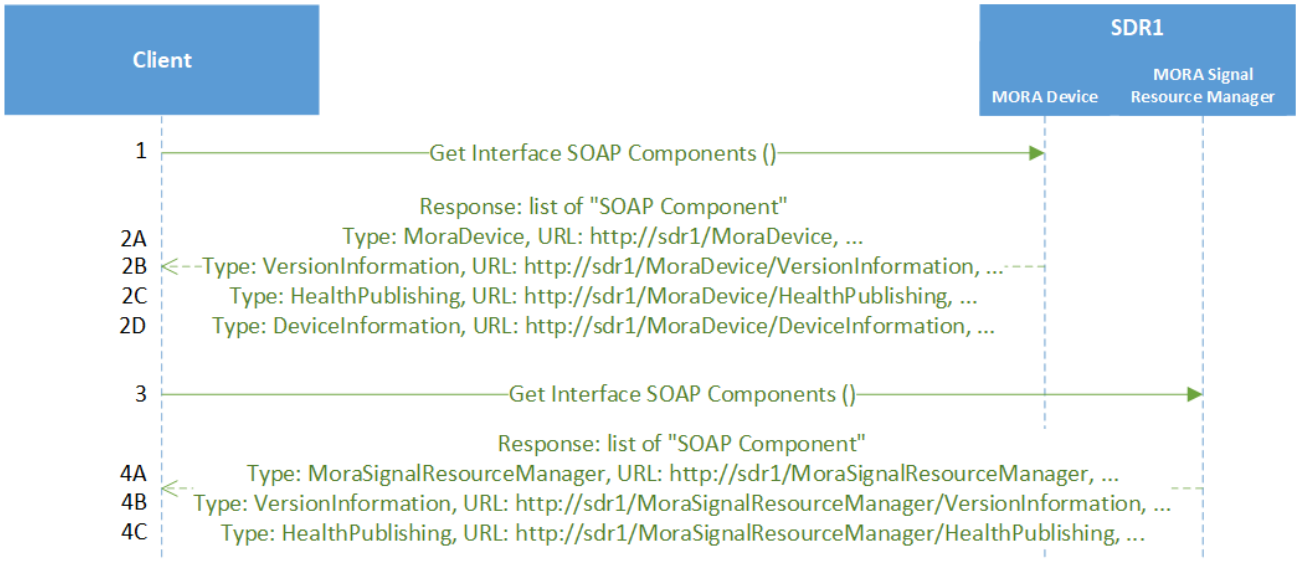

Figure 30 Version Information Web Service Example

The following is an in-depth explanation of the message interactions between a client and SDR1's MORA Device and MORA Signal Resource Manager component types in Figure 30 above.

1. Get Interface SOAP Components
    a. The client makes a web service call to http://sdr1/MoraDevice/VersionInformation to provide the web service endpoints on SDR1. Notice that the URL the client is connected to is the same URL that we retrieved from the Component Discovery section explaining zero configuration.
2. Response

    SDR1's MORA Device will respond with a list of "SOAP Components", as described in the "Version Information Complex Types" section of the VICTORY Standard Specifications, that includes a SOAP component type, a URL, and additional information. The SOAP component type is a description of the interface and lets the client know which WSDL was used to implement the interface. The URL is the endpoint for the interface.

    a. MORA Device: http://sdr1/MoraDevice
        i. The MORA Device Management Interface provides operations for the MORA Device. These include device level description, status, basic file input and output, configuration management, built-in test, and command.
        ii. For more information about this interface, see "MORA Device Management Parameters".
    b. Version Information: http://sdr1/MoraDevice/VersionInformation
    c. Health Publishing: http://sdr1/MoraDevice/HealthPublishing
    d. Device Information: http://sdr1/MoraDevice/DeviceInformation
        i. For more information about this interface, see the "Device Information Management Parameters" section in the VICTORY Standard Specifications.
3. Get Interface SOAP Components
    a. The client makes a web service calls to http://sdr1/MoraSignalResourceManager/VersionInformation to provide the web service endpoints on SDR1. Notice that the URL the client is connected to is the same URL that we retrieved from the Component Discovery section explaining zero configuration.
4. Response

    SDR1's MORA Signal Resource Manager will respond with a list of "SOAP Components", as described in the "Version Information Complex Types" section of the VICTORY Standard Specifications, that includes a SOAP component type, a URL, and additional information. The SOAP component type is a description of the interface and lets the client know which WSDL was used to implement the interface. The URL is the endpoint for the interface.

a. MORA Signal Resource Manager: http://sdr1/MoraSignalResourceManager
    i. The MORA Signal Resource Management Interface provides a means to retrieve all the information about the signal resources within a MORA Device to include them in an RF chain implementation. This interface includes methods to discover the signal ports, RF functions (signal domain conversion, frequency translation, RF conditioning, RF distribution, and antennas), and performance vs. frequency data. It also contains a reservation method for efficient allocation of signal ports on the MORA Device.
    ii. For more information about this interface, see "MORA Signal Resource Management Parameters".
b. Version Information: http://sdr1/MoraSignalResourceManager/VersionInformation
c. Health Publishing: http://sdr1/MoraSignalResourceManager/HealthPublishing
    i. For more information about this interface, see the "Syslog-Based Health Publishing Management Specification" section in the VICTORY Standard Specifications.

7.3.3 Retrieving Device Level Information

Once the web service endpoints have been discovered, the client can determine the type, status, available file structure, and current configuration of the MORA Device. This is done through the MORA Device Management Interface. Figure 31 illustrates the web service calls that will enable the client to learn of all the device level information.

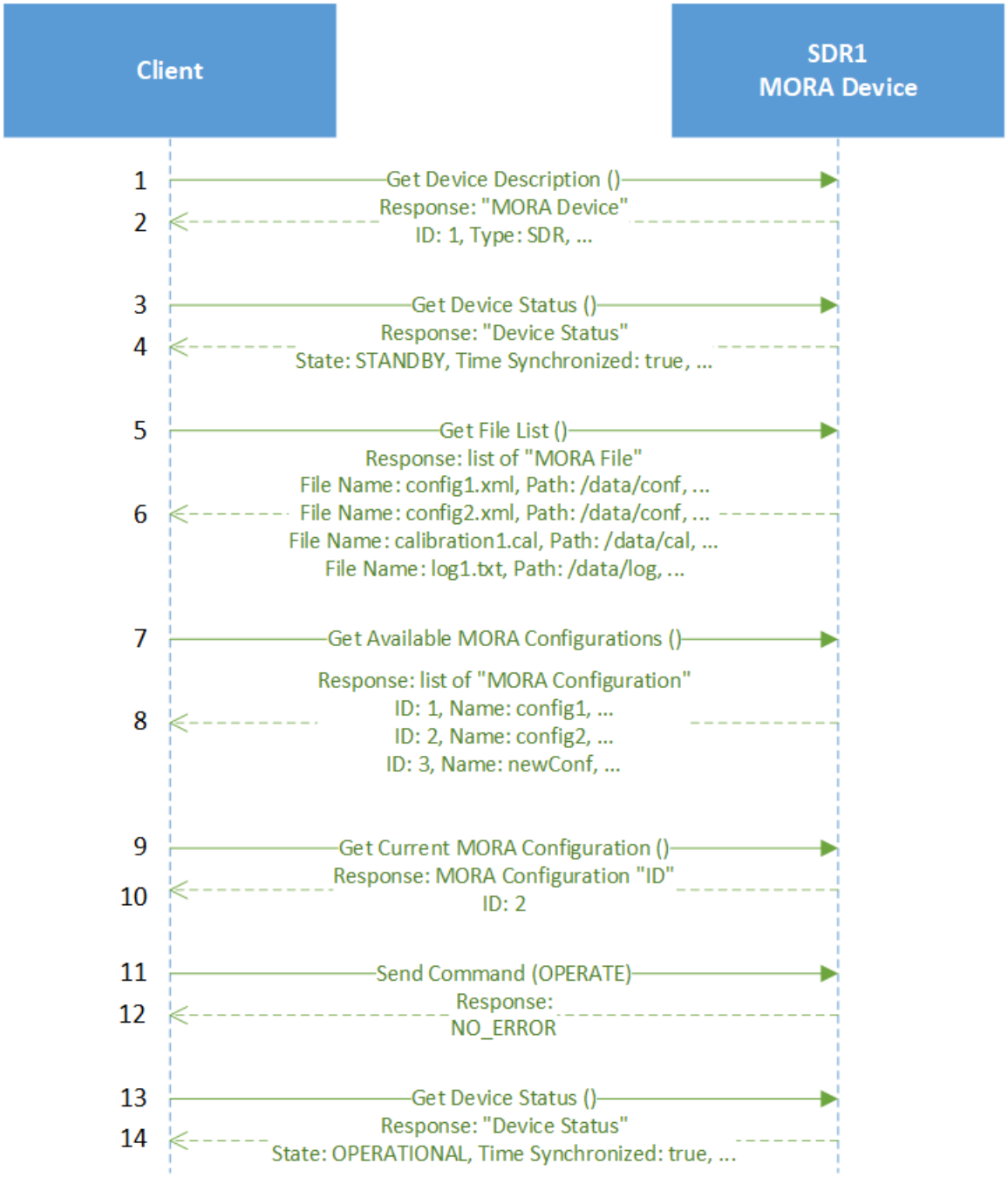

Figure 31 Retrieving Device Level Information

The following is an in-depth explanation of the message interactions between a client and SDR1's MORA Device component type in Figure 31 above.

1. Get Device Description ( )
    a. The client requests http://sdr1/MoraDevice to provide the device description from the SDR1.
2. Response
    a. SDR1 responds with a "MORA Device" complex type, including:
        i. ID: 1, Type: SDR, and additional information.
3. Get Device Status ( )

   a. The client requests the SDR1's status.
4. Response
   a. SDR1 responds with a "Device Status" complex type, including:
      i. State: STANDBY, Time Synchronized: true, and additional information.
5. Get File List ( )
   a. The client asks for a list of all the available files on SDR1.
6. Response
   a. SDR1 responds with a list of "MORA File" complex types, including:
      i. ID: config1, Size: 32, and additional information.
      ii. ID: config2, Size: 50, and additional information.
      iii. ID: calibration1, Size: 45, and additional information.
      iv. ID: log1, Size: 16, and additional information.
7. Get Available MORA Configurations ( )
   a. The client requests all the available configurations on SDR1.
8. Response
   a. SDR1 responds with a list of "MORA Configuration" complex types, including:
      i. ID: 1, Name: config1, and additional information.
      ii. ID: 2, Name: config2, and additional information.
      iii. ID: 3, Name: newConf, and additional information.
9. Get Current MORA Configuration ( )
   a. The client requests SDR1's current active configuration.
10. Response
    a. SDR1 responds with the MORA Configuration "ID" of the current configuration.
11. Send Command (OPERATE)
    a. The client sends a request to set SDR1 to operational.
12. Response
    a. SDR1 responds with NO_ERROR.
13. Get Device Status ( )
    a. The client requests the SDR1's status.
14. Response
    a. SDR1 responds with a "Device Status" complex type, including:
       i. State: OPERATIONAL, Time Synchronized: true, and additional information.

7.3.4 Retrieving Signal Resource Capability

After the MORA Devices are discovered over the network, a signal resource client can access the signal resource management interfaces on any of the MORA Devices to learn more about the signal ports present on the device. During this phase, a signal resource client can determine the functional capability described in section Resource Capabilities and Tasking.

Figure 32 is a sequence diagram that illustrates the sequence of web service calls required to retrieve the capability of a MORA Signal Resource. This allows the signal resource client to learn about which resources are available and make an educated decision about which resource would provide the best performance for a given processing task.

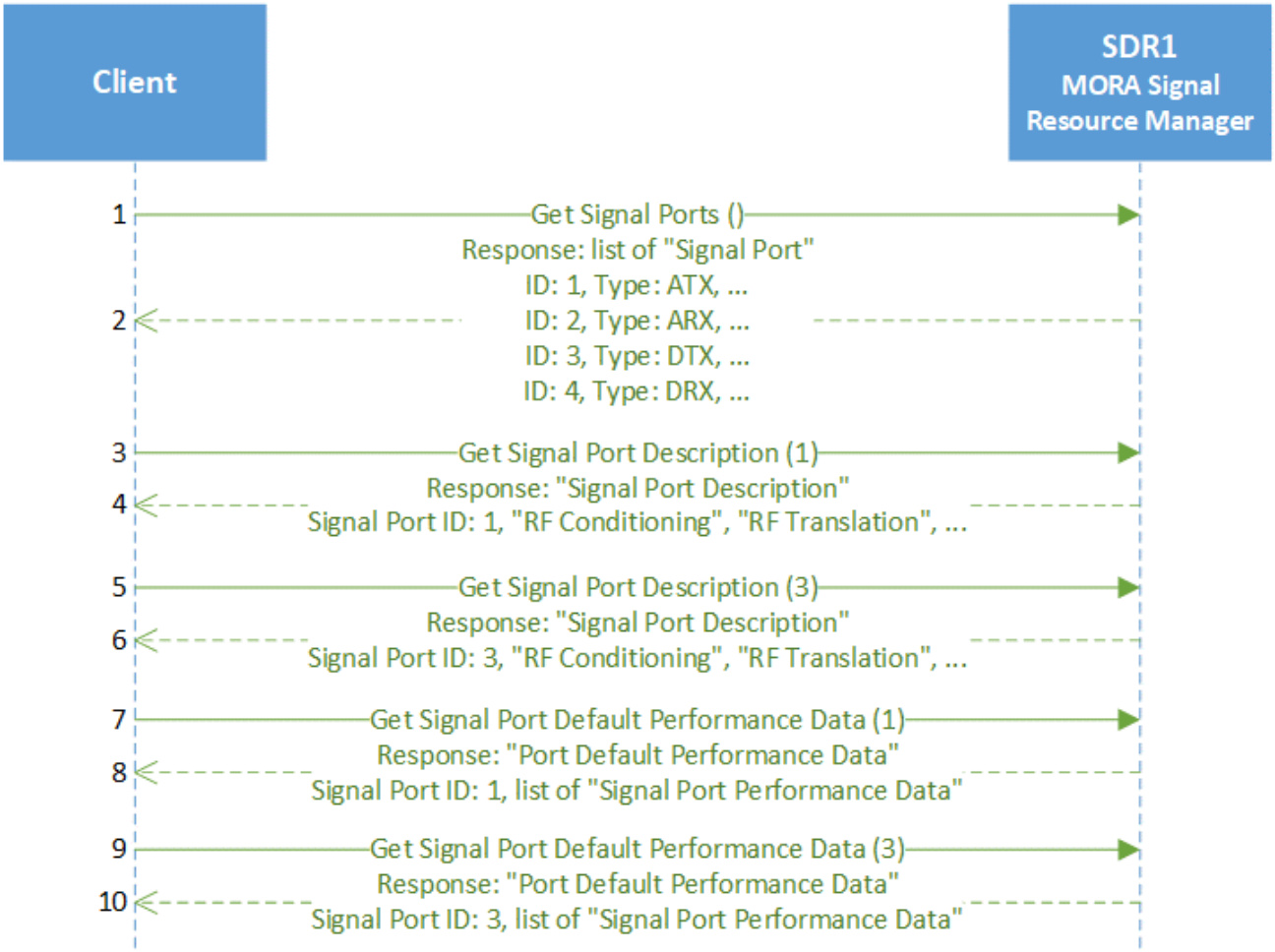

Figure 32 Retrieving Signal Port Capability

The following is an in-depth explanation of the message interactions between a client and SDR1's MORA Signal Resource Manager component type in Figure 32 above.

1. Get Signal Ports ( )
    a. The client requests http://sdr1/MoraSignalResourceManager to provide a list of signal ports on SDR1.
2. Response
    a. SDR1 responds with a list of "Signal Port" complex types, including:
        i. ID: 1, Type: ATX, and additional information.
        ii. ID: 2, Type: ARX, and additional information.
        iii. ID: 3, Type: DTX, and additional information.
        iv. ID: 4, Type: DRX, and additional information.
3. Get Signal Port Description (1)
    a. The client requests SDR1 to provide more RF functional information for Signal Port 1.
4. Response
    a. SDR1 responds with a "Signal Port Description" complex type, including:
        i. Signal Port ID: 1, "RF Conditioning", "RF Translation", and additional information.
5. Get Signal Port Description (3)
    a. The client requests SDR1 to provide more RF functional information for Signal Port 3.
6. Response
    a. SDR1 responds with a "Signal Port Description" complex type, including:
        i. Signal Port ID: 3, "RF Conditioning", "RF Translation", and additional information.

7. Get Signal Port Default Performance Data (1)
    a. The client requests SDR1 to provide the list of performance data for Signal Port 1.
8. Response
    a. SDR1 responds with the list of "Port Default Performance Data" complex types, including:
        i. Signal Port ID: 1, list of "Signal Port Performance Data".
9. Get Signal Port Default Performance Data (3)
    a. The client requests SDR1 to provide the list of performance data for Signal Port 3.
10. Response
    a. SDR1 responds with the list of "Port Default Performance Data" complex types, including:
        i. Signal Port ID: 3, list of "Signal Port Performance Data".

7.3.5 Signal Port Reservation and Release

After retrieving the signal resource capability information, a signal resource client should be able to determine if the signal ports are sufficient for the processing task to be executed. Once the signal resource client has found a viable signal port that meets its requirements, it needs to reserve that signal port to control it. This reservation is based on priority that will be set by a system integrator or mission commander. Once the reservation has been granted via a web service call, the signal resource client is able to start control of the signal port over the ML2B using MDMs. Figure 33 illustrates the process of signal port reservation and control.

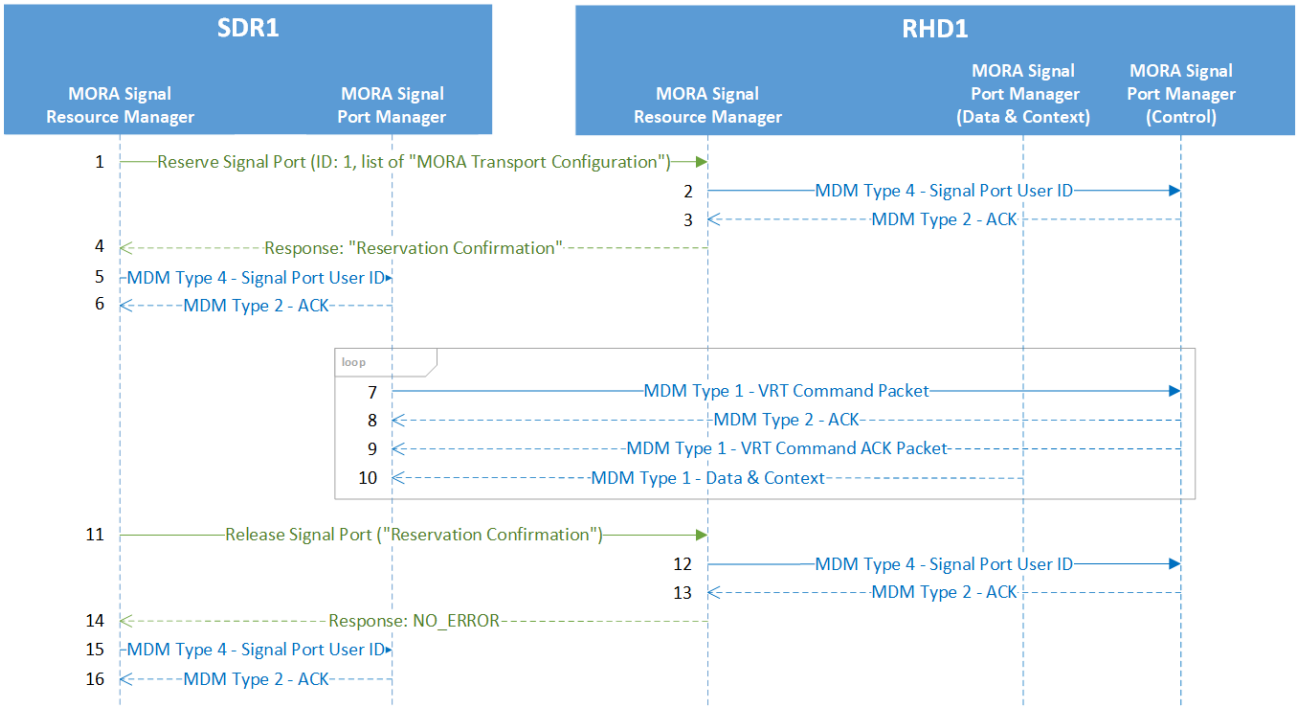

Figure 33 Signal Port Reservation and Release

The following is an in-depth explanation of the message interactions between SDR1's MORA Signal Resource Manager, SDR1's MORA Signal Port Manager, RHD1's MORA Signal Resource Manager and RHD1's MORA Signal Port Managers in Figure 33 above.

1. Reserve Signal Port (1, list of “MORA Transport Configuration”)
    a. SDR1 Signal Resource Manager (http://sdr1/SignalResourceManager) requests RHD1 Signal Resource Manager (http://rhd1/SignalResourceManager) for assignment of Signal Port 1.
2. MDM Type 4 - Signal Port User ID
    a. RHD1 Signal Resource Manager requests a reservation from RHD1 Signal Port Manager (udp:// 192.168.2.1:5002/5002) and requests the optional MDM ACK.
3. MDM Type 2 - ACK
    a. RHD1 Signal Port Manager acknowledges request from RHD1 Signal Resource Manager.
4. Reserve Signal Port Response
    a. RHD1 validates the request and acknowledges that it has allocated RHD1 Signal Port 1 to SDR1 Signal Port 9 and responds with a “Reservation Confirmation”.
5. MDM Type 4 - Signal Port User ID
    a. SDR1 Signal Resource Manager Client announces reservation to SDR1 Signal Port Manager Client (udp://192.168.1.1:5001/5001) and requests the optional MDM ACK.
6. MDM Type 2 - ACK
    a. SDR1 Signal Port Manager Client acknowledges announcement from SDR1 Signal Resource Manager Client.
7. MDM Type 1 - VRT Command Packet
    a. SDR1 Signal Port Manager Client sends a VRT Command Packet to RHD1 Signal Port Manager
        i. Specifies all controllable attributes for the signal port.
        ii. Requests the optional MDM ACK.
        iii. Requests the optional VRT ACK.
8. MDM Type 2 - ACK
    a. RHD1 Signal Port Manager acknowledges command receipt from SDR1 Signal Port Manager Client.
9. MDM Type 1 - VRT Command ACK Packet
    a. RHD1 Signal Port Manager acknowledges command viability from SDR1 Signal Port Manager Client.
10. MDM Type 1 - VRT Data and Context
    a. RHD1 Signal Port Manager publishes data to multicast://225.192.1.1:5002/5002 and context to multicast://225.192.1.2:5002/5002 which SDR1 Signal Port Manager Client has subscribed to.
11. Release Signal Port (“Reservation Confirmation”)
    a. Upon completion of all tasking, SDR1 Signal Manager Resource Client releases RHD1 Signal Port 1.
12. MDM Type 4 - Signal Port User ID
    a. RHD1 Signal Resource Manager announces the release to RHD1 Signal Port Manager and requests the optional MDM ACK.
13. MDM Type 2 - ACK
    a. RHD1 Signal Port Manager acknowledges announcement from RHD1 Signal Resource Manager
14. Release Signal Port Response.
    a. RHD validates the announcement and acknowledges that it has released RHD1 Signal Port 1 from SDR1 Signal Port 9 and responds with NO_ERROR.
15. MDM Type 4 - Signal Port User ID
    a. SDR1 Signal Resource Manager Client announces release to SDR1 Signal Port Manager Client and requests the optional MDM ACK.
16. MDM Type 2 - ACK
    a. SDR1 Signal Port Manager Client acknowledges release announcement from SDR1 Signal Resource Manager Client.

7.4 Improved Survivability

7.4.1 Example Transmit or Receive System

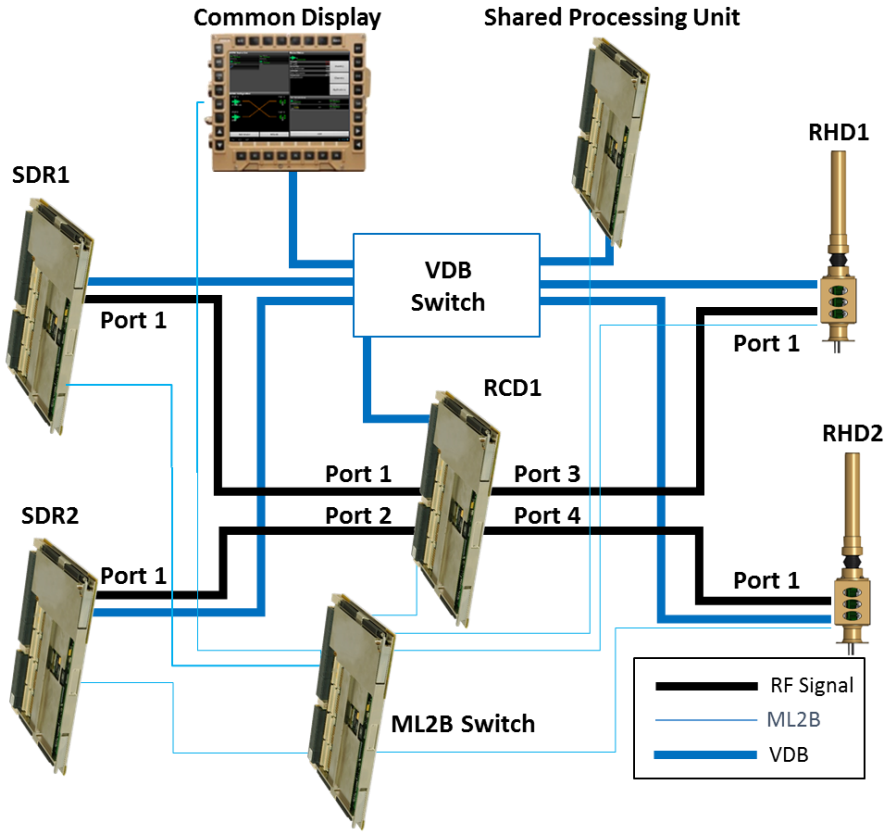

Figure 34 MORA Transmit or Receive

Figure 34 illustrates an example of a Transmit or Receive system running two distinct waveforms. The following data can be gathered using the message exchanges described in "Component Discovery" and "Retrieving Signal Resource Capability" sections above. The information below is a partial list of the response message contents.

Equipment and capability information:

1. SDR1
    a. Signal Ports
        i. ID: 1
        ii. Type: ATR
        iii. MORA Transport Configuration:
            a. Control Transport Configuration: udp://192.168.1.1:10000/10000
            b. Context Transport Configuration: multicast://239.192.1.1:10000/10000
    b. Waveform
        i. ID: 1
2. SDR2
    a. Signal Ports
        i. ID: 1
        ii. Type: ATR
        iii. MORA Transport Configuration:

            a. Control Transport Configuration: udp://192.168.1.2:11000/11000
            b. Context Transport Configuration: multicast://239.192.1.2:11000/11000
    b. Waveform
        i. ID: 2
3. RHD1
    a. Signal Ports
        i. ID: 1
        ii. Type: ATR
        iii. MORA Transport Configuration:
            a. Control Transport Configuration: udp://192.168.2.1:20000/20000
            b. Context Transport Configuration: multicast://239.192.2.1:20000/20000
    b. Antenna Arrays
        i. ID: 1
        ii. Elements
            a. Array Element
                i. ID: 1
                ii. Frequency Range
                1. Start: 200,000,000
                2. End: 800,000,000
    c. Filter Bank
        i. ID: 1
        ii. Filters
            a. Filter
                i. ID: 1
                ii. Frequency Range
                1. Start: 200,000,000
                2. End: 400,000,000
            b. Filter
                i. ID: 2
                ii. Frequency Range
                1. Start: 400,000,000
                2. End: 800,000,000
4. RHD2
    a. Signal Ports
        i. ID: 1
        ii. Type: ATR
        iii. MORA Transport Configuration:
            a. Control Transport Configuration: udp://192.168.2.2:21000/21000
            b. Context Transport Configuration: multicast://239.192.2.2:21000/21000
    b. Antenna Arrays
        i. ID: 1
        ii. Elements
            a. Array Element
                i. ID: 1
                ii. Frequency Range
                1. Start: 200,000,000
                2. End: 800,000,000
    c. Filter Bank
        i. ID: 1
        ii. Filters
            a. Filter
                i. ID: 1

            ii. Frequency Range
                1. Start: 200,000,000
                2. End: 400,000,000
        b. Filter
            i. ID: 2
            ii. Frequency Range
                1. Start: 400,000,000
                2. End: 800,000,000

5. RCD1 (2x2 full transfer switch)
    a. Signal Ports
        i. ID: 1
        ii. Type: ATR
        iii. MORA Transport Configuration:
            a. Control Transport Configuration: udp://192.168.3.1:30000/30000
            b. Context Transport Configuration: multicast://239.192.3.1:30000/30000
        iv. ID: 2
        v. Type: ATR
        vi. MORA Transport Configuration:
            a. Control Transport Configuration: udp://192.168.3.1:30000/30000
            b. Context Transport Configuration: multicast://239.192.3.1:30000/30000
        vii. ID: 3
        viii. Type: ATR
        ix. MORA Transport Configuration:
            a. Control Transport Configuration: udp://192.168.3.1:30000/30000
            b. Context Transport Configuration: multicast://239.192.3.1:30000/30000
        x. ID: 4
        xi. Type: ATR
        xii. MORA Transport Configuration
            a. Control Transport Configuration: udp://192.168.3.1:30000/30000
            b. Context Transport Configuration: multicast://239.192.3.1:30000/30000
    b. Switch Group
        i. ID: 1
        ii. Switch States
            a. ID: 1
            b. Connections
                i. Port ID 1: 3
                ii. Port ID 2: 4
            c. ID: 2
            d. Connections
                i. Port ID 1: 4
                ii. Port ID 2: 3
    c. External Connection Map
        i. External Connection
            a. Local Signal Port ID: 1
            b. External Signal Port ID: 1
            c. External Device
                i. ID: 1, Type: SDR, and additional information
        ii. External Connection
            a. Local Signal Port ID: 2
            b. External Signal Port ID: 1
            c. External Device
                i. ID: 2, Type: SDR, and additional information

iii. External Connection
    a. Local Signal Port ID: 3
    b. External Signal Port ID: 1
    c. External Device
        i. ID: 1, Type: RHD, and additional information

iv. External Connection
    a. Local Signal Port ID: 4
    b. External Signal Port ID: 1
    c. External Device
        i. ID: 2, Type: RHD, and additional information

7.4.2 Radiohead Failover

Figure 35 depicts an instantiation of the MORA system reference design where each SDR is running a different mission. Figure 36 illustrates the ability to use redundancy inherent to MORA to recover from a Radiohead failure. In this case, it is assumed that Mission 1 has a higher priority than Mission 2. When the Radiohead running Mission 1 fails, the RCD is reconfigured to preempt Mission 2 and reroute Mission 1 to the functioning Radiohead.

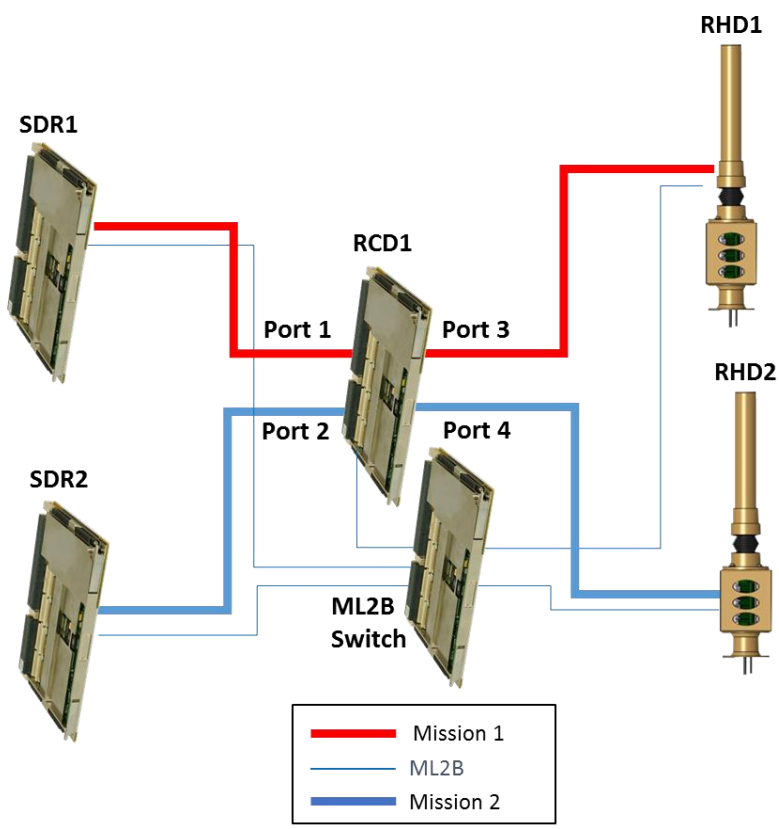

Figure 35 Common Hardware for Multiple Missions

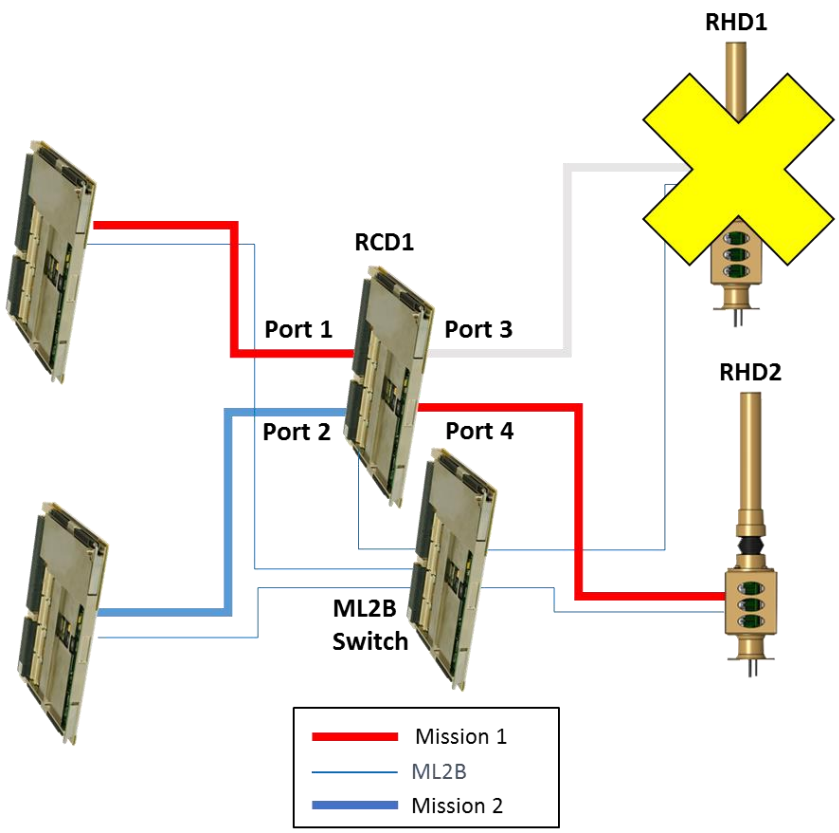

Figure 36 Radiohead Failover

7.4.3 SDR Failover

Figure 37 illustrates the ability to use redundancy inherent to MORA to recover from an SDR failure. Once again, it is assumed that Mission 1 has a higher priority than Mission 2. When the SDR running Mission 1 fails, the personality (i.e., RF application) of the functioning SDR is changed from Mission 2 to Mission 1. The RCD is then reconfigured to route the "new" Mission 1 SDR to the original Mission 1 Radiohead.

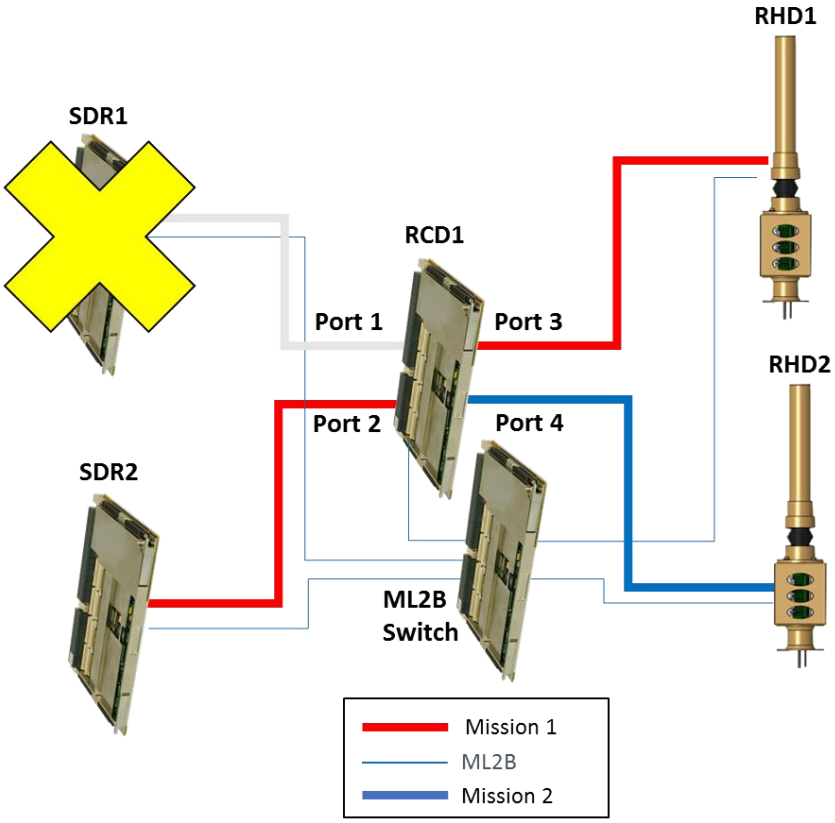

Figure 37 SDR Failover

7.5 Improved Performance

7.5.1 Transmit Diversity

Figure 38 illustrates the ability to share Radioheads to perform time-switched transmit diversity. In this configuration, the RCD rapidly switches the two SDRs between the two Radioheads. The resulting signal that is sent to each Radiohead is an interleaved aggregate of the two missions. It is recommended that one of the SDRs controls when this switching occurs to improve performance by switching on frame boundaries. This control can be accomplished by an MDM over the ML2B.

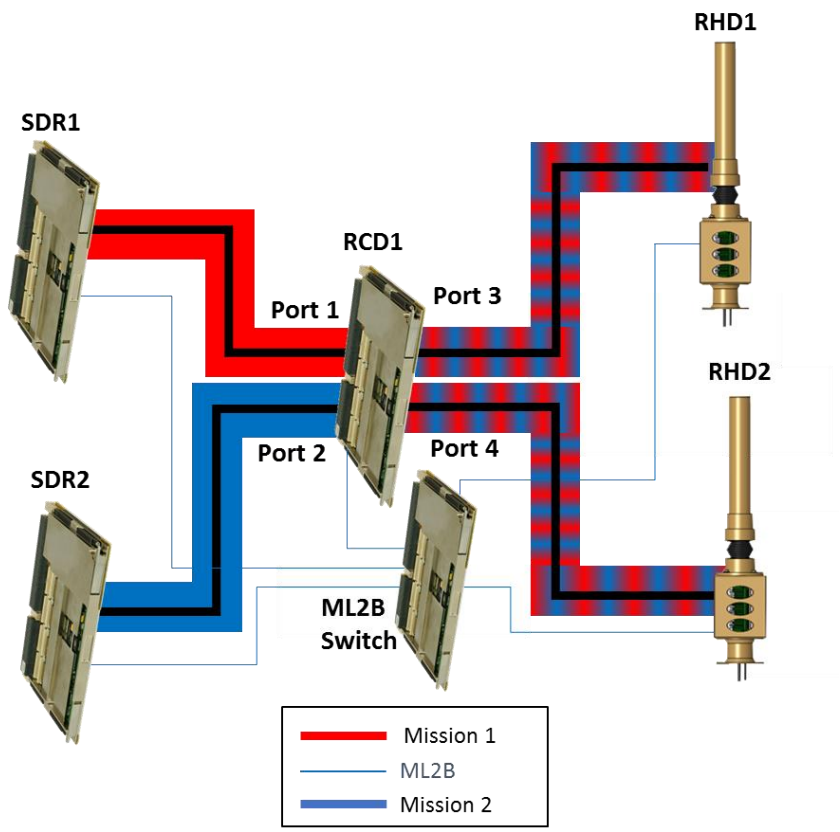

Figure 38 Transmit Diversity

7.5.2 Switch Group With Transmit Diversity

Figure 39 illustrates the message exchange for a time switched transmit diversity scenario. The associated example system is described in section "Example Transmit or Receive System". This example assumes that SDR1 will control when switching occurs in RCD1 and that both SDR1 and SDR2 devices are in OPERATIONAL status.

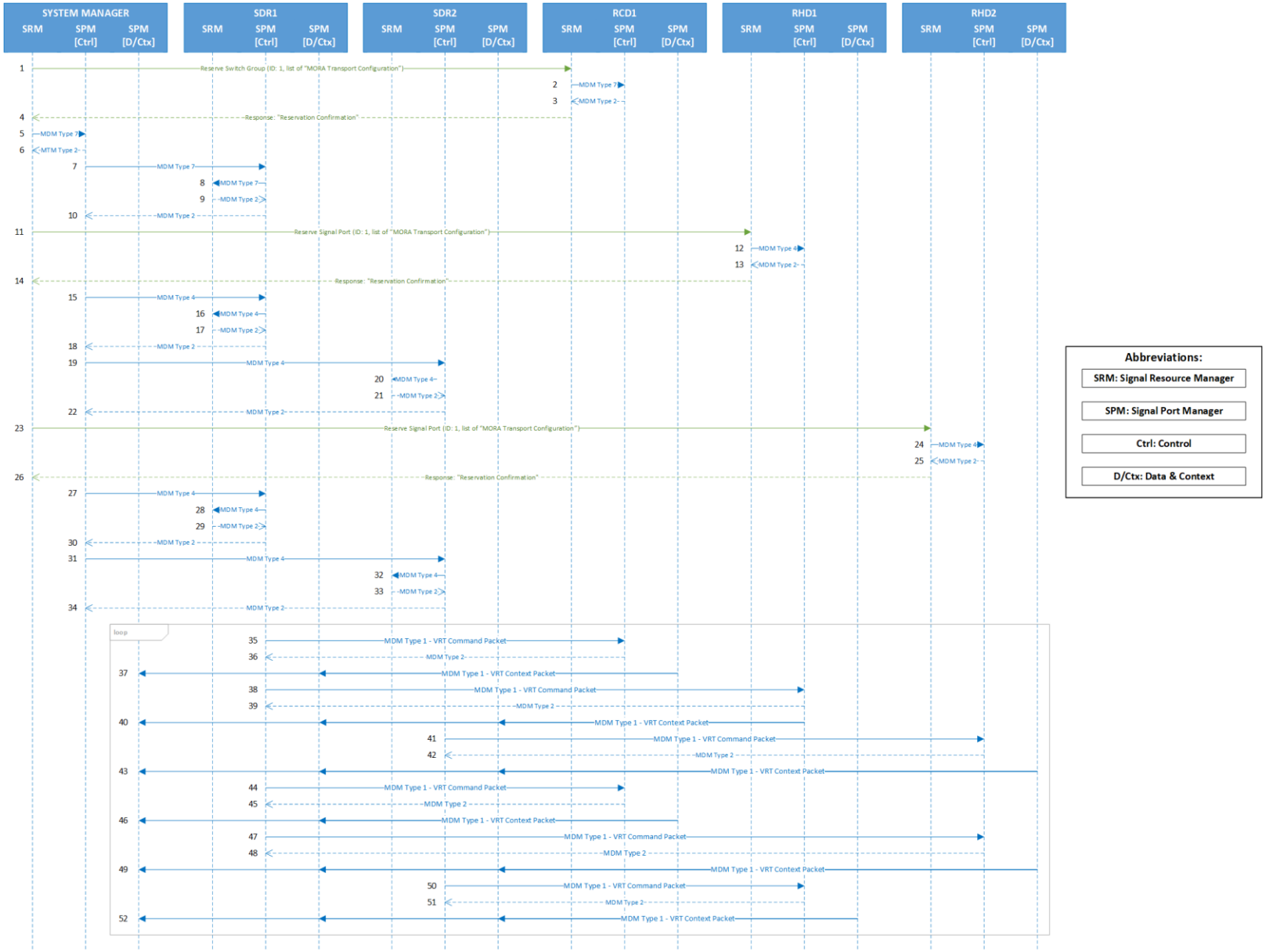

Figure 39 Switch Control with Transmit Diversity

The following is an in-depth explanation of the messaging in Figure 39 above.

1. Reserve Switch Group (1, list of "MORA Transport Configuration")
    a. SYSTEM MANAGER Signal Resource Manager requests RCD1 Signal Resource Manager to grant control of Switch Group 1 to SDR1.
    b. Arguments
        i. ID: 1
        ii. MORA Transport Configuration
            1. Component ID: SDR1
            2. Signal Port ID: 1
            3. Control Transport Configuration: udp://192.168.1.1:1000/1000
            4. Context Transport Configuration: multicast://239.192.1.1:1000/1000
2. MDM Type 7 - Switch Group User ID
    a. RCD1 Signal Resource Manager requests a reservation from RCD1 Signal Port Manager and requests the optional MDM ACK.
3. MDM Type 2 - ACK
    a. RCD1 Signal Port Manager acknowledges request from RCD1 Signal Resource Manager.
4. Reserve Switch Group Response
    a. SYSTEM MANAGER receives acknowledgement from RCD1 that it has granted control of Switch Group 1 to SDR1 and responds with a "Reservation Confirmation".
5. MDM Type 7 - Switch Group User ID
    a. SYSTEM MANAGER Signal Resource Manager Client announces reservation to SYSTEM MANAGER Signal Port Manager Client and requests the optional MDM ACK.
6. MDM Type 2 - ACK
    a. SYSTEM MANAGER Signal Port Manager Client acknowledges announcement from SYSTEM MANAGER Signal Resource Manager.
7. MDM Type 7 - Switch Group User ID
    a. SYSTEM MANAGER Signal Port Manager Client announces the RCD1 Switch Group 1 reservation made by SYSTEM MANAGER on SDR1's behalf, to SDR1 Signal Port Manager and requests the optional MDM ACK.
8. MDM Type 7 - Switch Group User ID
    a. SDR1 Signal Port Manager announces RCD1 Switch Group 1 reservation to SDR1 Signal Resource Manager and requests the optional MDM ACK.
9. MDM Type 2 - ACK
    a. SDR1 Signal Resource Manager acknowledges announcement from SDR1 Signal Port Manager.
10. MDM Type 2 - ACK
    a. SDR1 Signal Port Manager acknowledges announcement from SYSTEM MANAGER Signal Port Manager Client.
11. Reserve Signal Port (1, list of "MORA Transport Configuration")
    a. SYSTEM MANAGER Signal Resource Manager requests a reservation from RHD1 Signal Resource Manager to allow SDR1 Signal Port 1 or SDR2 Signal Port 1 to control RHD1 Signal Port 1.
    b. Arguments
        i. ID: 1
        ii. MORA Transport Configuration
            1. Component ID: SDR1
            2. Signal Port ID: 1
            3. Control Transport Configuration: udp://192.168.1.1:1000/1000
            4. Context Transport Configuration: multicast://239.192.1.1:1000/1000
        iii. MORA Transport Configuration
            1. Component ID: SDR2
            2. Signal Port ID: 1
            3. Control Transport Configuration: udp://192.168.1.2:1001/1001
            4. Context Transport Configuration: multicast://239.192.1.2:1001/1001

12. MDM Type 4 - Signal Port User ID
    a. RHD1 Signal Resource Manager announces the reservation to RHD1 Signal Port Manager and requests the optional MDM ACK.
13. MDM Type 2 - ACK
    a. RHD1 Signal Port Manager acknowledges announcement from RHD1 Signal Resource Manager.
14. Signal Port Reserve Response
    a. SYSTEM MANAGER receives acknowledgement from RHD1 that it has granted control of Signal Port 1 to SDR1 and SDR2 and responds with a "Reservation Confirmation".
15. MDM Type 4 - Signal Port User ID
    a. SYSTEM MANAGER Signal Port Manager Client announces the RHD1 Signal Port 1 reservation made by SYSTEM MANAGER on SDR1's behalf, to SDR1 Signal Port Manager and requests the optional MDM ACK.
16. MDM Type 4 - Signal Port User ID
    a. SDR1 Signal Port Manager announces RHD1 Signal Port 1 reservation to SDR1 Signal Port Manager and requests the optional MDM ACK.
17. MDM Type 2 - ACK
    a. SDR1 Signal Resource Manager acknowledges announcement from SDR1 Signal Port Manager.
18. MDM Type 2 - ACK
    a. SDR1 Signal Port Manager acknowledges announcement from SYSTEM MANAGER Signal Port Manager Client.
19. MDM Type 4 - Signal Port User ID
    a. SYSTEM MANAGER Signal Port Manager Client announces the RHD1 Signal Port 1 reservation made by SYSTEM MANAGER on SDR2's behalf, to SDR2 Signal Port Manager and requests the optional MDM ACK.
20. MDM Type 4 - Signal Port User ID
    a. SDR2 Signal Port Manager announces RHD1 Signal Port 1 reservation to SDR2 Signal Port Manager and requests the optional MDM ACK.
21. MDM Type 2 - ACK
    a. SDR2 Signal Resource Manager acknowledges announcement from SDR2 Signal Port Manager.
22. MDM Type 2 - ACK
    a. SDR2 Signal Port Manager acknowledges announcement from SYSTEM MANAGER Signal Port Manager Client.
23. Reserve Signal Port (1, list of "MORA Transport Configuration")
    a. SYSTEM MANAGER Signal Resource Manager requests a reservation from RHD2 Signal Resource Manager to allow SDR1 Signal Port 1 or SDR2 Signal Port 1 to control RHD2 Signal Port 1.
    b. Arguments
        i. ID: 1
        ii. MORA Transport Configuration
            1. Component ID: SDR1
            2. Signal Port ID: 1
            3. Control Transport Configuration: udp://192.168.1.1:1000/1000
            4. Context Transport Configuration: multicast://239.192.1.1:1000/1000
        iii. MORA Transport Configuration
            1. Component ID: SDR2
            2. Signal Port ID: 1
            3. Control Transport Configuration: udp://192.168.1.2:1001/1001
            4. Context Transport Configuration: multicast://239.192.1.2:1001/1001
24. MDM Type 4 - Signal Port User ID
    a. RHD2 Signal Resource Manager announces the reservation to RHD2 Signal Port Manager and requests the optional MDM ACK.
25. MDM Type 2 - ACK
    a. RHD2 Signal Port Manager acknowledges announcement from RHD2 Signal Resource Manager.

26. Signal Port Reserve Response
    a. SYSTEM MANAGER receives acknowledgement from RHD2 that it has granted control of Signal Port 1 to SDR1 and SDR2 and responds with a “Reservation Confirmation”.
27. MDM Type 4 - Signal Port User ID
    a. SYSTEM MANAGER Signal Port Manager Client announces the RHD2 Signal Port 1 reservation made by SYSTEM MANAGER on SDR1’s behalf, to SDR1 Signal Port Manager and requests the optional MDM ACK.
28. MDM Type 4 - Signal Port User ID
    a. SDR1 Signal Port Manager announces RHD2 Signal Port 1 reservation to SDR1 Signal Port Manager and requests the optional MDM ACK.
29. MDM Type 2 - ACK
    a. SDR1 Signal Resource Manager acknowledges announcement from SDR1 Signal Port Manager.
30. MDM Type 2 - ACK
    a. SDR1 Signal Port Manager acknowledges announcement from SYSTEM MANAGER Signal Port Manager Client.
31. MDM Type 4 - Signal Port User ID
    a. SYSTEM MANAGER Signal Port Manager Client announces the RHD2 Signal Port 1 reservation made by SYSTEM MANAGER on SDR2’s behalf, to SDR2 Signal Port Manager and requests the optional MDM ACK.
32. MDM Type 4 - Signal Port User ID
    a. SDR2 Signal Port Manager announces RHD2 Signal Port 1 reservation to SDR2 Signal Port Manager and requests the optional MDM ACK.
33. MDM Type 2 - ACK
    a. SDR2 Signal Resource Manager acknowledges announcement from SDR2 Signal Port Manager.
34. MDM Type 2 - ACK
    a. SDR2 Signal Port Manager acknowledges announcement from SYSTEM MANAGER Signal Port Manager Client.
35. MDM Type 1 - VRT Command Packet
    a. SDR1 Signal Port Manager sends an MDM control message to RCD1 Signal Port Manager to set Switch Group 1 to state 1 and requests the optional MDM ACK.
    b. Discrete I/O Field:
        i. Switch Group ID: 1
        ii. Switch State ID: 1
36. MDM Type 2 - ACK
    a. RCD1 Signal Port Manager sends an MDM acknowledgement message to SDR1 Signal Port Manager, indicating that it has received and validated the message.
37. MDM Type 1 - VRT Context Packet
    a. RCD1 Signal Port Manager multicasts a context message to multicast://239.192.3.1:1004/1004
38. MDM Type 1 - VRT Command Packet
    a. SDR1 Signal Port Manager sends an MDM control message to RHD1 Signal Port Manager to set Signal Port 1 transmit/receive switch to transmit and set Filter Bank 1 to selection 2 and requests the optional MDM ACK.
    b. Discrete I/O Field:
        i. T/R Bit: Transmit
        ii. Filter Bank 1: 2
39. MDM Type 2 - ACK
    a. RHD1 Signal Port Manager sends an MDM acknowledgement message to SDR1 Signal Port Manager, indicating that it has received and validated the message.
40. MDM Type 1 - VRT Context Packet (Multicast)
    a. RHD1 Signal Port Manager multicasts a context message to multicast://239.192.2.1:1002/1002
41. MDM Type 1 - VRT Command Packet

   a. SDR2 Signal Port Manager sends an MDM control message to RHD2 Signal Port Manager to set Signal Port 1 transmit/receive switch to transmit and set Filter Bank 1 to selection 1 and requests the optional MDM ACK.
   b. Discrete I/O Field:
      i. T/R Bit: Transmit
      ii. Filter Bank 1: 1
42. MDM Type 2 - ACK
   a. RHD2 Signal Port Manager sends an MDM acknowledgement message to SDR2 Signal Port Manager, indicating that it has received and validated the message.
43. MDM Type 1 - VRT Context Packet (Multicast)
   a. RHD2 Signal Port Manager multicasts a context message to multicast://239.192.2.2:1003/1003
44. MDM Type 1 - VRT Command Packet
   a. SDR1 Signal Port Manager sends an MDM control message to RCD1 Signal Port Manager to set Switch Group 1 to state 1 and requests the optional MDM ACK.
   b. Discrete I/O Field:
      i. Switch Group ID: 1
      ii. Switch State ID: 2
45. MDM Type 2 - ACK
   a. RCD1 Signal Port Manager sends an MDM acknowledgement message to SDR1 Signal Port Manager, indicating that it has received and validated the message.
46. MDM Type 1 - VRT Context Packet (Multicast)
   a. RCD1 Signal Port Manager multicasts a context message to multicast://239.192.3.1:1004/1004
47. MDM Type 1 - VRT Command Packet
   a. SDR1 Signal Port Manager sends an MDM control message to RHD2 Signal Port Manager to set Signal Port 1 transmit/receive switch to transmit and set Filter Bank 1 to selection 2 and requests the optional MDM ACK.
   b. Discrete I/O Field:
      i. T/R Bit: Transmit
      ii. Filter Bank 1: 2
48. MDM Type 2 - ACK
   a. RHD2 Signal Port Manager sends an MDM acknowledgement message to SDR1 Signal Port Manager, indicating that it has received and validated the message.
49. MDM Type 1 - VRT Context Packet (Multicast)
   a. RHD2 Signal Port Manager multicasts a context message to multicast://239.192.2.2:1003/1003
50. MDM Type 1 - VRT Command Packet
   a. SDR2 Signal Port Manager sends an MDM control message to RHD1 Signal Port Manager to set Signal Port 1 transmit/receive switch to transmit and set Filter Bank 1 to selection 1 and requests the optional MDM ACK.
   b. Discrete I/O Field:
      i. T/R Bit: Transmit
      ii. Filter Bank 1: 1
51. MDM Type 2 - ACK
   a. RHD1 Signal Port Manager sends an MDM acknowledgement message to SDR2 Signal Port Manager, indicating that it has received and validated the message.
52. MDM Type 1 - VRT Context Packet (Multicast)
53. RHD1 Signal Port Manager multicasts a context message to multicast://239.192.2.1:1002/1002
54. *Loop back to sequence 35*

MODULAR OPEN RF ARCHITECTURE

(MORA)

DRAFT APPENDIX A

VERSION 2.4

MARCH 01, 2021

DISTRIBUTION STATEMENT A. Approved for public release. Distribution is unlimited.

APPENDIX A: MORA ZEROCONF ANNOUNCEMENT STRINGS

Table 86 MORA Zeroconf Announcement Strings

MORA Service/Component Name	Announcement String Type	Announcement String Sub Type	DNS-TXT	Existing Standard
MORA Device	_mora-mgt._tcp	_device	txtvers(3) wsdls path tls	No
MORA Signal Resource Manager	_mora-mgt._tcp	_sig-rsrc	txtvers(3) wsdls path tls	No

Table 87 Recommended VICTORY Zeroconf Announcements for Consumption

VICTORY Service/Component Name	Announcement String Type	Announcement String Sub Type
Authentication Service	_vic-mgt._tcp	_auth
Direction of Travel Service	_vic-mgt._tcp	_dot
GPS Receiver	_vic-mgt._tcp	_gps-rcrv
Orientation Service	_vic-mgt._tcp	_orientation
Policy Enforcement Service	_vic-mgt._tcp	_pol-enf
Position Service	_vic-mgt._tcp	_position

Table 88 Announcement String TXT Field Descriptions

TXT Field	Usage/Meaning	Required Field	txtvers Version Added
txtvers	Version number of the DNS-TXT fields used by the VICTORY specification. Currently, the only values accepted by VICTORY for the “txtvers” field are 1, 2, and 3. When a new TXT field is added, or the meaning of an existing TXT field is changed, the “txtvers” field for that announcement will be incremented for backwards compatibility. In the table (above), the value that is expected is reported in parentheses. For example, if the entry is txtvers(3) for an announcement string, then it is required that an implementation of that announcement for this version of VICTORY will include txtvers=3 in the TXT field. For reference, the "txtvers Version Added” field records when a TXT field value was first added to VICTORY. Knowing when a field was added allows a client to understand which fields it is expected to parse when it receives an announcement string with an equivalent txtvers value.	Yes	1
wsdls	A comma-separated list of URLs (minus the hostname and port, in most cases). Each entry shall refer to the location of one of the parameter-describing WSDLs that comprise the VICTORY Management Interface that is being announced. NOTE: The hostname and port shall be excluded in all cases where they are the same as the hostname and port that is already being announced by the zeroconf DNS-SD entry. This is required by the DNS-SD and mDNS specifications.	No	1
path	The “filesystem path” to the resource being announced. In all cases, this must be a relative path, with the assumption that the full URI of the resource would include the announced hostname and port in addition to the value of the “path” field. This field is common in both VICTORY-defined service announcements, and existing standard announcements. For all VICTORY Management Interface announcements (vic-mgt._tcp) and MORA Management Interface announcements (mora-mgt._tcp), this field shall point to the location of the “Version Information Management Parameters” network endpoint, presuming that the endpoint is running at a full URL, and not at the base URL (the hostname and port only).	No	2
tls	Indicates if Transport Layer Security (TLS) is enabled for the service being announced. If present, it must be either true or false. If absent, it is presumed to be true.	No	3

MODULAR OPEN RF ARCHITECTURE

(MORA)

DRAFT APPENDIX B

VERSION 2.4

MARCH 01, 2021

DISTRIBUTION STATEMENT A. Approved for public release. Distribution is unlimited.

APPENDIX B: MORA WSDLS

Table 89 MORA WSDLs

Specification	WSDL File Name	Applicability
MORA Device Management Parameters Specification	MoraDevice.wsdl	Required
MORA Signal Resource Management Parameters Specification	MoraSignalResource.wsdl	Optional
Radio Frequency Distribution Management Parameters Specification	RfDistribution.wsdl	Optional
Waveform Management Parameter Specification	Waveform.wsdl	Optional

Table 90 Inherited VICTORY WSDLs

Specification	WSDL File Name	Applicability
Authentication Service Management Specification	Authentication.wsdl	Optional
Authentication Entrypoints	AuthenticationEntrypoints.wsdl	Optional
Authorization Architecture Entrypoints	AuthorizationArchitectureEntrypoints.wsdl	Optional
Device Information Management Parameters	DeviceInformation.wsdl	Required
Generic End Node Management Parameters	GenericEndNode.wsdl	Required
Syslog-Based Health Publishing Management Specification	HealthPublishing.wsdl	Required
Policy Enforcement Management Specification	PolicyEnforcement.wsdl	Optional
Version Information Management Parameters	VersionInformation.wsdl	Required
VICTORY Data Management Parameters	VICTORYData.wsdl	Optional

MODULAR OPEN RF ARCHITECTURE

(MORA)

DRAFT APPENDIX C

VERSION 2.4

MARCH 01, 2021

DISTRIBUTION STATEMENT A. Approved for public release. Distribution is unlimited.

APPENDIX C: MORA SCHEMAS

Table 91 MORA Schemas

Name of Type	Name of Schema File	Applicability
MORA Common Complex Types	MoraCommonComplexTypes.xsd	Required
MORA Device Management Types	MoraDeviceManagementTypes.xsd	Required
MORA Signal Resource Management Types	MoraSignalResourceManagementTypes.xsd	Required
RF Distribution Management Types	RFDistributionManagementTypes.xsd	Optional
Waveform Management Types	WaveformManagementTypes.xsd	Optional

Table 92 Inherited VICTORY Schemas

Name of Type	Name of Schema File	Applicability
Authentication Entrypoints Types	AuthenticationEntrypointsTypes.xsd	Optional
Authentication Management Types	AuthenticationManagementTypes.xsd	Optional
Authorization Architecture Entrypoints Types	AuthorizationArchitectureEntrypointsTypes.xsd	Optional
Information Assurance Types	InformationAssuranceTypes.xsd	Optional
OASIS SAML Schema Assertion 2.0	saml-schema-assertion-2.0.xsd	Optional
OASIS SAML Schema Protocol 2.0	saml-schema-protocol-2.0.xsd	Optional
Policy Enforcement Management Types	PolicyEnforcementManagementTypes.xsd	Optional
VICTORY Data Messages	VDM.xsd	Optional
VICTORY Data Types	VICTORYDataTypes.xsd	Required
VICTORY Management Types	VICTORYManagementTypes.xsd	Required
VICTORY Messages	VICTORYMessages.xsd	Required
VICTORY Shared Types	VICTORYSharedTypes.xsd	Required
XML Encryption	xenc-schema.xsd	Optional
XML Multimedia Internet Message Extensions	xmlmime.xsd	Optional
XML Signature	xmldsig-core-schema.xsd	Optional

MODULAR OPEN RF ARCHITECTURE

(MORA)

DRAFT APPENDIX D

VERSION 2.4

MARCH 01, 2021

DISTRIBUTION STATEMENT A. Approved for public release. Distribution is unlimited.

APPENDIX D: RESOURCE MANAGEMENT EXAMPLE

Figure 40 below depicts an example for a resource management plan for a two application (ES and OEA) RF system using the MORA resource management, described in section "MORA Resource Management", including a single high-priority client for each partitioned resource as well as multicasting of data from signal resources and multicasting of information from processing resources.

System Devices

The resource management example below depicts an RF system that contains a MORA receive only (RXO) Radiohead (RHD1) with both analog and digital signal ports as well as on-board processing resources. The system contains a second MORA Radiohead that is a transmit only (TXO) type. Additionally, the system utilizes a MORA RF Conditioning and Distribution Device (RCD1) for distributing the RHD1 analog signals to other resources within a MORA Software Defined Radio with two receive and two transmit channels (SDR1). Finally, the system also uses two VICTORY shared processing units with processing and application resources (OTH1 and OTH2).

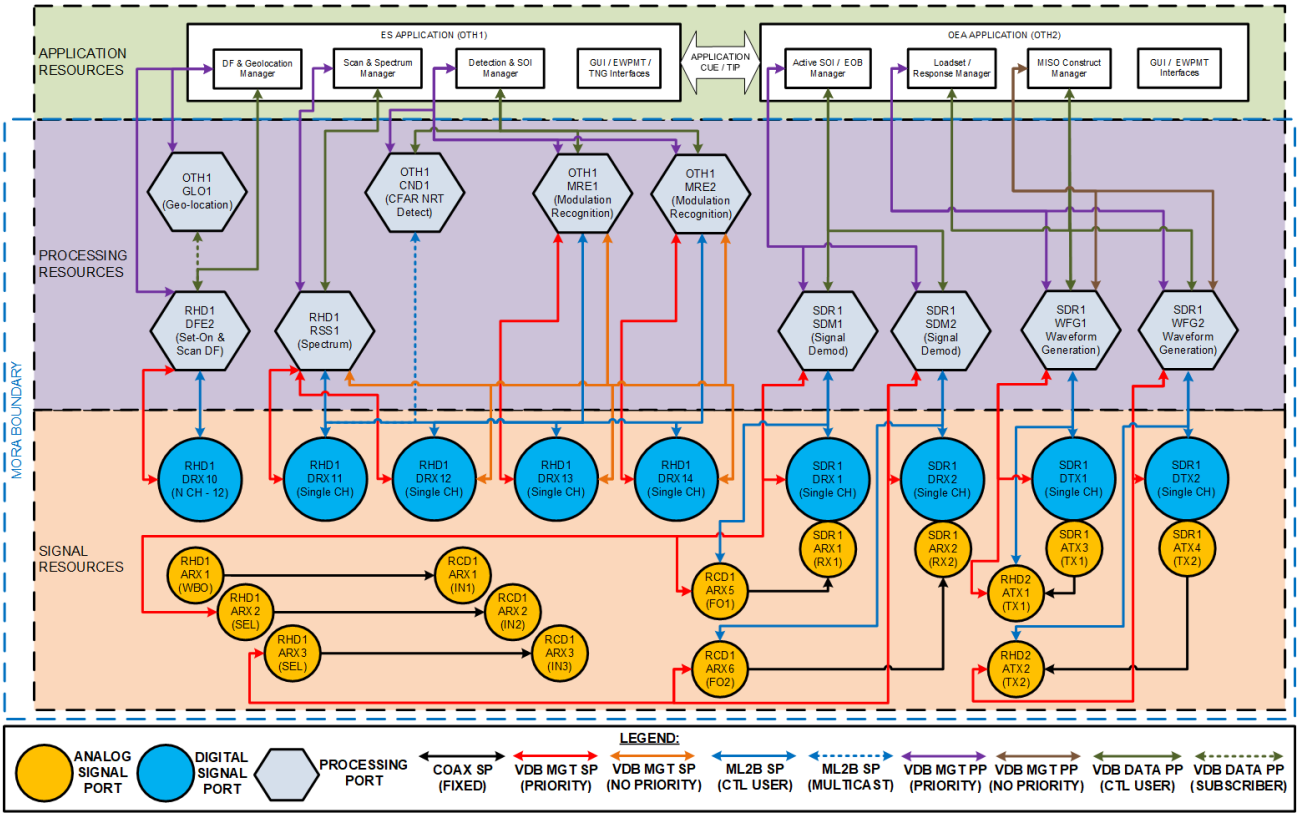

Figure 40 Two Application MORA Resource Management Example

Device Resources

RHD1 provides three analog receive signal ports, known as ARX1, a wideband omnidirectional feed, ARX2, a select element feed, and ARX3, a second independent select element feed. These three ARX signal ports are routed to (externally cabled to) RCD1. RHD1 also contains five digital receive (DRX) signal ports known as DRX10, an N-Channel receive stream, and four more DRX signal ports known as DRX11, DRX12, DRX13, and DRX14, which are identical single-channel receive streams. RHD1 also has on-board processing resources for spectrum sensing (called processing port RSS1) and direction finding (called processing port DFE2) capabilities which utilize the collocated signal resources for data sources.

RCD1 receives the RHD1 receive signals from RHD1 ports ARX1, ARX2, and ARX3 via coax cabling. These RCD inputs (RCD1 ports ARX1, ARX2, and ARX3) are used to derive two full fan-out, non-blocking outputs (RCD1 ports ARX5 and ARX6) which are then routed to (externally cabled to) SDR1 RX inputs (SDR1 ports ARX1 and ARX2), hence allowing any SDR receive channel to independently access any RHD1 analog signal port.

In addition to SDR1's analog receive only ports (SDR1 ports ARX1 and ARX2), SDR1 also contains two analog transmit signal ports (SDR1 ports ATX3 and ATX4). These analog transmit signals are then routed to RHD2 to be radiated. SDR1 also contains on-board processing resources for receive signal demodulation (SDR1 processing ports SDM1 and SDM2) and transmit waveform generation (SDR1 processing ports WFG1 and WFG2) capabilities which utilize the collocated signal resources to complete the RF chain.

OTH1 contains processing resources to perform multiple receive chain functions including geolocation (OTH1 processing port GLO1), signal detection (OTH1 processing port NSD1), and modulation recognition (OTH1 processing ports MRE1 and MRE2) capabilities. OTH1 also contains application resources. Although MORA doesn't fully define application resource interfaces, it does define the interfaces to/from processing resources. In the example shown, ES application resources are notionally depicted performing as four functional managers, known as DF and GEO, scan/spectrum, detect/SOI, and user interface, which are directly interfacing with OTH1 processing resources.

OTH2 only contains application resources for performing OEA. These resources are notionally depicted performing as four functional managers, known as active signals of interest, response manager, information operations, and user interface, which are directly interfacing with SDR1 processing resources.

Resource Sharing and Multicasting

Every signal resource or processing resource is implemented in the system with just one highest priority client, as shown in red lines for signal resources and purple lines for processing resources. This ensures resource availability for minimally acceptable static RF chain performance. In addition to these one-to-one relationships, resources are also opened to potential allocation to other lower priority clients during idle times where it can be helpful. This is shown for signal resources in the orange lines and for processing resources in the brown lines.

This example demonstrates the operational benefit of sharing signal resources within the ES application. The example mapped depicts the sharing of signal resources; specifically, three single-channel DRX signal ports (RHD1 DRX12, DRX13, and DRX14) are made accessible to both the spectrum and modulation recognition processing resources. The RF spectrum sensor (RSS1) processing resource is the highest priority client for DRX11 and DRX12. RSS1 is also a lower priority client for DRX13 and DRX14. The first modulation recognition (MRE1) processing resource is the highest priority client for DRX13; MRE1 is also a lower priority client for DRX12 and DRX14. The second modulation recognition (MRE2) processing resource is the highest priority client for DRX14; MRE2 is also a lower priority client for DRX12 and DRX13. This ensures that all processing resources always have a minimum guaranteed available amount of signal resources. When scanning detections from the signal detector (NSD1) processing resource are low, the MRE1 and MRE2 tasking will be low as well. Therefore, the DRX12, DRX13, and DRX14 signal resources can be used to accomplish faster spectrum scanning, hence improving probability of intercept.

This example also demonstrates the operational benefit of sharing processing resources within the EA application resources. The example mapped depicts the sharing of processing resources, specifically, two waveform generators (WFG1 and WFG2) are made accessible to both the load set/response manager and MISO construct manager within the EA application resources. The load set/response manager application resource is the highest priority client for WFG1 and WFG2 while the MISO construct manager application resource also has access to WFG1 and WFG2 on a lower priority basis. This means that when response manager tasking is low, the MISO function can also be supported by these processing resources.

This example also demonstrates data and information multicasting from both signal resources and processing resources that helps increase efficiency and reduce SWaP. Multicasting the DRX11 (and DRX12-14, if available) spectrum signal data streams to both the RSS1 and CND1 increases scan speed while supporting both functions. Multicasting the DFE1 LOB data to both the geolocation processing resource and the ES application resource allows LOBs to be displayed and sent off-board (if requested) while the single platform geolocations are being computed.