EXISTING CONDITION MAP NOTES:

1. THE HORIZONTAL DATUM IS REFERENCED TO THE NORTH AMERICAN DATUM OF 1983, NEW YORK STATE PLANE WEST ZONE 3103.

2. THE VERTICAL DATUM IS REFERENCED TO THE NATIONAL GEODETIC VERTICAL DATUM OF 1929 (NGVD29). ELEVATIONS WERE ESTABLISHED ONSITE VIA DIFFERENTIAL LEVELING HOLDING SEVERAL RECORD FINISHED FLOOR ELEVATIONS AND UTILITY IRON ELEVATIONS. ELEVATIONS ARE 0.42' HIGHER THAN NAVD88 ELEVATIONS DERIVED FROM GPS OBSERVATIONS ONSITE.

3. UNDERGROUND UTILITIES SHOWN HEREON ARE BASED ON SURFACE EVIDENCE AND PROVIDED RECORD MAPPING. THIS MAPPING DOES NOT PURPORT TO SHOW ALL UNDERGROUND UTILITIES ON SITE AND IS SUBJECT TO FIELD VERIFICATION. CONTRACTOR SHALL PROVIDE QL-B UTILITY LOCATION SERVICES FOR ENTIRE PROJECT SITE AND UP TO 2 DAYS OF QL-A UTILITY LOCATION USING SOFT-DIG EQUIPMENT TO VERIFY LOCATION OF UTILITIES.

4. INFORMATION SHOWN HEREON IS FROM A FIELD SURVEY COMPLETED BY M.J. ENGINEERING AND LAND SURVEYING, P.C. BETWEEN AUGUST 22 AND AUGUST 25, 2022.

5. CONTOUR INTERVAL = 1'.

6. UNAUTHORIZED ALTERATIONS OR ADDITION TO THIS SURVEY MAP IS A VIOLATION OF SECTION 7209 OF THE NEW YORK STATE EDUCATION LAW. COPIES OF THIS SURVEY MAP NOT BEARING THE LAND SURVEYORS SEAL AND SIGNED WITH INK SHALL NOT BE CONSIDERED TO BE VALID COPIES.

REMOVAL NOTES:

1. CONFORM TO APPLICABLE CODE FOR DEMOLITION OF STRUCTURES, SAFETY OF ADJACENT STRUCTURES, DUST CONTROL, RUNOFF CONTROL, AND HAULING, DISPOSAL AND STORAGE OF DEBRIS.

2. PROVIDE, ERECT, AND MAINTAIN TEMPORARY BARRIERS AND SECURITY DEVICES.

3. MAINTAIN EXISTING UTILITIES TO REMAIN IN SERVICE AND PROTECT THEM AGAINST DAMAGE DURING SELECTIVE DEMOLITION OPERATIONS. DO NOT INTERRUPT EXISTING UTILITIES SERVING OPERATING FACILITIES, EXCEPT WHEN AUTHORIZED IN WRITING BY THE COR.

4. PREVENT MOVEMENT OR SETTLEMENT OF ADJACENT STRUCTURES. PROVIDE BRACING AND SHORING.

5. LOCATE AND IDENTIFY ALL EXISTING UTILITIES WITHIN THE CONSTRUCTION AREA AS REQUIRED BY SPECIFICATION SECTION 023313. DISCONNECT AND SEAL OR CAP OFF UTILITY SERVICES THAT WILL BE AFFECTED BY THIS PROJECT. NOTIFY THE COR AT A MINIMUM OF 72 HOURS BEFORE STARTING WORK AND WITH THEIR REQUIREMENTS. VERIFY THAT UTILITIES HAVE BEEN DISCONNECTED AND CAPPED.

6. REMOVE COMPONENTS IN AN ORDERLY AND CAREFUL MANNER.

7. PROTECT EXISTING FEATURES THAT ARE NOT TO BE REMOVED.

8. CONDUCT OPERATIONS WITH MINIMUM INTERFERENCE TO PUBLIC OR PRIVATE ACCESSES.

9. MAINTAIN EGRESS AND ACCESS AT ALL TIMES. DO NOT CLOSE OR OBSTRUCT ROADWAYS, OR SIDEWALKS WITHOUT THE COR'S PERMISSION.

10. CEASE OPERATIONS IMMEDIATELY IF ADJACENT STRUCTURES APPEAR TO BE IN DANGER.

11. ROUGH GRADE AND COMPACT AREAS AFFECTED BY DEMOLITION TO MAINTAIN SITE GRADES AND CONTOURS.

12. FIELD VERIFY EXISTING CONDITIONS AND CORRELATE WITH REQUIREMENTS INDICATED ON DEMOLITION PLAN TO DETERMINE EXTENT OF SELECTIVE DEMOLITION REQUIRED.

13. CONDUCT DEMOLITION OPERATIONS AND REMOVE DEBRIS TO ENSURE MINIMUM INTERFERENCE WITH SELECTIVE DEMOLITION OPERATIONS.

14. CONDUCT DEMOLITION OPERATIONS TO PREVENT INJURY TO PEOPLE AND
DAMAGE TO ADJACENT BUILDINGS AND FACILITIES TO REMAIN. ENSURE SAFE PASSAGE OF PEOPLE AROUND SELECTIVE DEMOLITION AREA.

15. REMOVE AND TRANSPORT DEBRIS IN A MANNER THAT WILL PREVENT SPILLAGE ON ADJACENT SURFACES AND AREAS. TRANSPORT ALL EXCESS MATERIALS OFF SITE AND LEGALLY DISPOSED OF.

16. CLEAN ADJACENT STRUCTURES AND IMPROVEMENTS OF DUST, DIRT AND
DEBRIS CAUSED BY SELECTIVE DEMOLITION OPERATIONS. RETURN ADJACENT AREAS TO CONDITION EXISTING BEFORE START OF SELECTIVE DEMOLITION.

17. LEGALLY DISPOSE OF DEMOLISHED MATERIALS. DISPOSE OF ALL DEBRIS RESULTING FROM DEMOLITION ACTIVITIES OFF-SITE AT A FACILITY LEGALLY APPROVED TO RECEIVE THE DEBRIS. DO NOT ALLOW DEMOLISHED MATERIALS TO ACCUMULATE ON-SITE. DO NOT BURN DEMOLISHED MATERIALS ON-SITE.

TEMPORARY UTILITY NOTES:

1. TEMPORARY WATER WILL BE AVAILABLE FOR USE DURING CONSTRUCTION AT VARIOUS LOCATIONS THROUGHOUT THE FACILITY BASED UPON AVAILABLE SYSTEM CAPACITY. COORDINATE WITH AND OBTAIN APPROVAL FROM THE COR FOR LOCATIONS TO DRAW WATER FROM THE EXISTING FACILITY WATER DISTRIBUTION SYSTEM. THE CONTRACTOR IS RESPONSIBLE FOR SUPPLYING, INSTALLING AND MAINTAINING ANY REQUIRED CROSS CONNECTION CONTROLS AT POINTS OF CONNECTION TO THE EXISTING FACILITY WATER SUPPLY.

2. TEMPORARY ELECTRICITY WILL BE AVAILABLE FOR USE DURING CONSTRUCTION AT VARIOUS LOCATIONS THROUGHOUT THE FACILITY BASED UPON AVAILABLE SYSTEM CAPACITY. COORDINATE WITH AND OBTAIN APPROVAL FROM THE COR FOR LOCATIONS TO CONNECT TO THE EXISTING FACILITY ELECTRICAL DISTRIBUTION SYSTEM.

3. PROVIDE TEMPORARY SANITARY FACILITIES FOR USING DURING CONSTRUCTION.

4. THE CONTRACTOR IS RESPONSIBLE FOR AND SHALL INCLUDE IN THEIR BID PRICE ANY TEMPORARY CONSTRUCTION LIGHTING THAT MAY BE NECESSARY TO COMPLETE THE WORK ASSOCIATED WITH THIS PROJECT. THIS MAY INCLUDE, BUT IS NOT LIMITED TO TEMPORARY CONSTRUCTION LIGHTING DURING POTENTIAL SHIFTS OUTSIDE FIRST SHIFT, THAT TYPICALLY COVERS 7AM TO 3PM. WHEN IT IS DETERMINED THAT TEMPORARY LIGHTING IS REQUIRED TO COMPLETE THE WORK, THE CONTRACTOR SHALL COORDINATE WITH AND OBTAIN APPROVAL FROM THE COR FOR LOCATIONS OF AND DURATION OF USE OF TEMPORARY LIGHTING AT A MINIMUM OF 48 HOURS IN ADVANCE OF IMPLEMENTING TEMPORARY LIGHTING FACILITIES. ALL TEMPORARY LIGHTING PROVIDED SHALL INCLUDE ITS OWN POWER SUPPLY AND SHALL NOT CONNECT TO THE FACILITY ELECTRICAL SYSTEM UNLESS PRIOR APPROVAL GRANTED BY THE COR.

5. SEE ALSO SPECIFICATION SECTION 015000 FOR ADDITIONAL INFORMATION REGARDING CONSTRUCTION FACILITIES AND TEMPORARY CONTROLS.

UDIG NY: CALL 811 BEFORE YOU DIG:

1. CALL BEFORE YOU DIG: IF YOU PLAN TO DIG OR DO ANY TYPE OF EXCAVATION WORK, NEW YORK STATE LAW REQUIRES YOU CALL DIG SAFELY NEW YORK PRIOR TO DOING SO.
2. WAIT THE REQUIRED TIME: YOU NEED TO PROVIDE TWO FULL WORKING DAYS NOTICE PRIOR TO STARTING YOUR WORK, NOT COUNTING THE DAY OF YOUR CALL, WEEKENDS OR HOLIDAYS. THIS PROVIDES TIME FOR THE UTILITIES TO LOCATE YOUR PROPOSED DIG SITE.
3. CONFIRM UTILITY RESPONSE: DIG SAFELY NEW YORK WILL NOTIFY ALL MEMBER UTILITIES OF THE PENDING EXCAVATION SO THAT THAT THEY CAN COME OUT AND MARK THE LOCATION OF THEIR UNDERGROUND LINES. BEFORE DIGGING ON YOUR STATED COMMENCEMENT DATE CONFIRM THAT ALL UTILITIES HAVE RESPONDED TO YOU INDICATING THEY HAVE MARKED YOUR PROPERTY OR THEY HAVE NO FACILITIES PRESENT.
4. RESPECT THE MARKS: BEFORE YOU BEGIN YOUR EXCAVATION, WALK THROUGH THE SITE TO FAMILIARIZE YOURSELF WITH THE MARKINGS AND THE LOCATIONS OF BURIED FACILITIES.
5. DIG WITH CARE: IT IS IMPORTANT EXCAVATORS TAKE A PROACTIVE APPROACH TO SAFETY NOT ONLY FOR THEMSELVES BUT FOR THE PUBLIC BY INITIATING THE ONE CALL PROCESS AND ADHERING TO THE FIVE STEPS OF A SAFE EXCAVATION.

GEOTECHNICAL EARTHWORK NOTES:

GEOTECHNICAL ENGINEERING REPORT PREPARED BY QUALITY GEO ENGINEERING, P.C. DATED SEPTEMBER 15 AND 26, 2022 PROVIDES THE FOLLOWING DIRECTION:

1. EVALUATE THE EXPOSED SUBGRADE BY PROOF-ROLLING, AFTER EXCAVATION TO THE DESIGN SOIL SUBGRADE ELEVATION, USING A LARGE SMOOTH DRUM ROLLER OPERATED IN THE STATIC MODE. A GEOTECHNICAL ENGINEER MUST BE PRESENT DURING THESE EFFORTS TO GUIDANCE AND OBSERVATION.

2. UNDERCUT ANY AREAS WHICH APPEAR WET, LOOSE, SOFT, UNSTABLE, OR OTHERWISE UNSUITABLE, AS DIRECTED BY THE GEOTECHNICAL ENGINEER. BACKFILL UNDERCUT EXCAVATIONS WITH IMPORTED STRUCTURAL FILL.

3. THE NEW BARN STRUCTURES CAN BE SUPPORTED USING SPREAD FOUNDATIONS, WHICH MAY BEAR ON UNDISTURBED INDIGENOUS CLAY SOILS, OR ON DRAINAGE STONE. IF GROUNDWATER CONDITIONS ARE ENCOUNTERED IN THE SPREAD FOUNDATION EXCAVATIONS, OR IF THE EXPOSED FOUNDATION BEARING GRADES WILL BE EXPOSED TO WET WEATHER CONDITIONS BETWEEN THE TIME OF EXCAVATION AND THE TIME THE FOOTINGS ARE POURED, PROTECT THE EXPOSED BEARING GRADES WITH A 6-INCH THICK LAYER OF DRAINAGE STONE.

4. CONTINUOUS WALL FOUNDATIONS MUST BE AT LEAST 1.5 FEET IN WIDTH AND ISOLATED COLUMN FOUNDATIONS MUST BE AT LEAST 2.5 SQUARE FEET. EXTERIOR FOUNDATIONS MUST BE EMBEDDED A MINIMUM OF 4.0 FEET BELOW FINISHED EXTERIOR GRADES FOR FROST PROTECTION.

5. SIZE SPREAD FOUNDATIONS USING A MAXIMUM ALLOWABLE SOIL BEARING PRESSURE OF 3,000 POUNDS PER SQUARE FOOT.

6. BASED ON SOILS CONDITIONS ENCOUNTERED IN THE TEST BORINGS, THE SITE CAN BE CLASSIFIED AS SEISMIC SITE CLASS "D".

ACCESSIBLE SIDEWALKS AND CURB RAMP NOTES:

1. DIMENSIONS SHOWN IN THE DETAILS AS MINIMUMS AND MAXIMUMS ARE THE LIMITS FOR DESIGN AND FIELD LAYOUT. FACILITIES SHALL NOT BE CONSTRUCTED WITH VALUES OUTSIDE THE LIMITS FOR WORK ACCEPTANCE. SEE TABLE "DESIGN ELEMENT TOLERANCES" BELOW.

2. TO CHECK FIELD LAYOUT AND TO VERIFY WORK ACCEPTANCE, ALL SLOPES AND GRADES WILL BE MEASURED WITH A 4' LONG DIGITAL LEVEL USING AT LEAST TWO READINGS. WHERE THE READINGS VARY, THE MEASUREMENTS WILL BE AVERAGED. GRADE (RUNNING SLOPE) WILL BE MEASURED ALONG THE CENTERLINE AND OFFSET 12" TO 18" FROM THE CENTERLINE. CROSS SLOPES WILL BE MEASURES PERPENDICULAR TO CENTERLINE AT 5' TO 10' INTERVALS.

3. GRADES (RUNNING SLOPES) ARE MEASURED IN THE DIRECTION OF PEDESTRIAN TRAVEL. CROSS SLOPES ARE MEASURED PERPENDICULAR TO THE DIRECTION OF PEDESTRIAN TRAVEL.

4. JOINTS BETWEEN SIDEWALKS, CURB RAMPS, TURNING SPACES AND ROADWAYS SHALL BE FLUSH AND FREE FROM ABRUPT VERTICAL CHANGES GREATER THAN $\frac{1}{4}$". VERTICAL SURFACE DISCONTINUITIES BETWEEN $\frac{1}{4}$" TO $\frac{1}{2}$" SHALL BE BEVELED WITH A SLOPE NOT STEEPER THAN 1:2. THE BEVEL SHALL BE APPLIED ACROSS THE ENTIRE JOINT.

5. THE CROSS SLOPE OF PEDESTRIAN ACCESS ROUTES SHALL BE 1.5% MAXIMUM FOR DESIGN AND LAYOUT, AND 2% MAXIMUM FOR WORK ACCEPTANCE.

6. THE RUNNING SLOPE OF PEDESTRIAN ACCESS ROUTES SHALL BE 4.5% MAXIMUM FOR DESIGN AND LAYOUT, AND 5% MAXIMUM FOR WORK ACCEPTANCE.

7. THE MINIMUM WIDTH OF A CURB RAMP SHALL BE 4'.

8. THE GRADE (RUNNING SLOPE) OF A CURB RAMP SHALL BE A MINIMUM OF 5%. THE GRADE FOR DESIGN AND LAYOUT SHALL BE A MAXIMUM OF 7.5%, THE GRADE FOR ADA ACCESSIBILITY AND WORK ACCEPTANCE SHALL BE A MAXIMUM OF 8.3%. THE MAXIMUM VERTICAL RISE OVER THE LENGTH OF THE CURB RAMP FOR ACCEPTANCE SHALL BE 6".

9. THE CROSS SLOPE OF THE CURB RAMP SHALL BE AS FLAT AS POSSIBLE AND STILL PROVIDE POSITIVE DRAINAGE. THE CROSS SLOPE OF A CURB RAMP SHALL BE 1.5% MAXIMUM FOR DESIGN AND LAYOUT, AND 2% MAXIMUM FOR WORK ACCEPTANCE.

10. WHERE A PEDESTRIAN CIRCULATION PATH CROSSES A CURB RAMP, FLARED SIDES SHALL BE INSTALLED WITH A MAXIMUM SLOPE OF 9.5% FOR DESIGN AND LAYOUT, AND 10% MAXIMUM FOR WORK ACCEPTANCE. THE SLOPE OF THE FLARED SIDES IS MEASURED PARALLEL TO THE CURB LINE.

DESIGN ELEMENT TOLERANCES

ELEMENT	DESIGN AND FIELD LAYOUT LIMIT	LIMIT FOR WORK ACCEPTANCE
SIDEWALK CROSS SLOPE	1.5% MAX	2.0% MAX
SIDEWALK GRADE - RUNNING SLOPE	4.5% MAX	5.0% MAX
CURB RAMP GRADE - RUNNING SLOPE	7.5% MAX	8.3% MAX

EROSION CONTROL NOTES:

1. CONSTRUCTION PHASING PLAN

THIS PROJECT WILL BE CONSTRUCTED AS A SINGLE PHASE.

2. EROSION AND SEDIMENT CONTROL PRACTICES

REFER TO DRAWING AND THE DETAILS AND THE PROJECT MANUAL FOR LOCATION, SIZES AND SPECIFICATIONS OF EROSION AND SEDIMENT CONTROL DEVICES.

A. TEMPORARY SEDIMENT CONTROL - SILT FENCE
SILT FENCE REDUCES RUNOFF VELOCITY AND CAUSES SETTLING OF SEDIMENT. INSTALL SILT FENCE WHERE SHOWN. INSTALL AROUND ANY STOCKPILED SOIL MATERIALS.

B. WETLAND PROTECTION FENCE (IF REQUIRED)
ORANGE CONSTRUCTION FENCE POSTED WITH "SENSITIVE AREA, STAY OUT" PROTECTS THE ON-SITE WETLANDS FROM UNAUTHORIZED DISTURBANCE.

C. TEMPORARY SEEDING
TEMPORARY SEEDING REDUCES EROSION AND SEDIMENT LOSS FROM BARE GROUND. PROVIDE TEMPORARY SEEDING TO PROVIDE TEMPORARY COVER FOR DISTURBED EARTH OR SOIL STOCKPILES. PROVIDE TEMPORARY SEEDING PER THE DRAWINGS OR AT A MINIMUM ON DISTURBED AREAS OR SOIL STOCKPILES HELD FOR LONGER THAN 7 DAYS. TEMPORARY SHUT DOWN OF CONSTRUCTION OR WAITING FOR OPTIMAL PLANTING TIME. IN SPRING, SUMMER OR EARLY FALL APPLY RYE GRASS AT AT A RATE OF 1 LB/ 1000 SQ. FT. IN LATE FALL OR EARLY SPRING, APPLY CERTIFIED AROOSTOOK RYE AT 2.5 LBS. / 1000 SQ. FT. APPLY STRAW AT 2 BALES / 1000 SQ. FT OR WOOD FIBER HYDROMULCH AT MANUFACTURER'S RECOMMENDED RATE. ANCHOR STRAW.

D. CONCRETE WASHOUT
CONCRETE WASHOUT IS TO BE DONE OFF SITE OR AT A MAINTAINED WASHOUT CONTAINER AS SHOWN IN THE PLAN(S). ALL WASTE WATER AND SEDIMENT FROM THE UNIT IS TO BE DISPOSED OF OFF SITE IN ACCORDANCE WITH STATE, LOCAL, AND FEDERAL REQUIREMENTS. FINAL LOCATION OF THE UNIT IS TO BE DETERMINED BY THE COR.

E. DUST CONTROL
DUST CONTROLS PREVENT SURFACE AND AIR MOVEMENT OF DUST FROM DISTURBED AREAS THAT MAY CAUSE OFF SITE DAMAGE, HEALTH HAZARDS AND TRAFFIC SAFETY PROBLEMS. PROVIDE DUST CONTROL THRU SUCH MEASURES AS SPRINKLING, CHEMICAL SOIL TREATMENTS AND TEMPORARY AND PERMANENT STABILIZATION MEASURES, SUCH AS SEEDING, MULCHING AND INSTALLING EROSION CONTROL BLANKETS. THESE MEASURES WILL PREVENT DUST FROM BLOWING OFF SITE. INSTALL TEMPORARY AND PERMANENT STABILIZATION MEASURES PER THE DRAWINGS, AS SOON AS FINAL GRADES ARE REACHED AND ON SOIL STOCKPILES AND DISTURBED AREAS TO BE LEFT FOR LONGER THAN 7 DAYS. USE SPRINKLING, CHEMICAL SOIL TREATMENTS AND OTHER METHODS AS REQUIRED TO PREVENT BLOWING DUST.

F. STORM DRAIN INLET PROTECTION
INLET PROTECTION IS A TEMPORARY, SOMEWHAT PERMEABLE BARRIER INSTALLED AROUND A STORM WATER INLET THAT PREVENTS SEDIMENT LADEN WATER FROM ENTERING THE SYSTEM BY FILTERING AND/OUR CAUSING SEDIMENT TO SETTLE. INSTALL INLET PROTECTION IMMEDIATELY UPON INSTALLATION OF A STORM DRAIN INLET. USE STONE AND BLOCK PROTECTION AROUND INLETS IN PAVED/GRAVEL AREAS. USE FABRIC PROTECTION AROUND INLETS INSTALLED IN LANDSCAPED AREAS. REMOVE PROTECTION UPON FINAL STABILIZATION OF THE SITE.

G. PERMANENT SEEDING
PERMANENT SEEDING PREVENTS SOIL EROSION FROM BARE SOIL. ONCE FINAL GRADING OF AN AREA HAS BEEN COMPLETED, PROVIDE PERMANENT SEEDING AND MULCHING PER SPECIFICATION SECTION 329219.

3. POLLUTION PREVENTION MEASURES

IN ADDITION TO THE EROSION AND SEDIMENT CONTROL MEASURES IMPLEMENTED AT THE SITE, IMPLEMENT THE FOLLOWING MEASURES TO PREVENT LITTER, CHEMICALS AND DEBRIS FROM ENTERING THE STORM DRAINS AND DISCHARGES FROM THE SITE OR INTO SENSITIVE AREAS.

A. PROPERLY INSTALL AND MAINTAIN EROSION AND SEDIMENT CONTROL DEVICES AS OUTLINED IN THE PROJECT DOCUMENTS AND IN COMPLIANCE WITH THE LATEST EDITION OF THE NEW YORK STATE STANDARDS AND SPECIFICATIONS FOR EROSION AND SEDIMENT CONTROL.

B. PROPERLY CONTAIN AND DISPOSE OF ALL MATERIALS USED ON SITE.

C. CLEAN UP SPILLS IMMEDIATELY TO MINIMIZE SAFETY HAZARD AND PREVENT SPREADING.

D. ROUTINELY INSPECT AND CLEAN OUT STORM CATCH BASINS AND CONVEYANCES.

E. CONTROL LITTER BY SWEEPING AND PICKING IT UP DAILY.

EROSION CONTROL NOTES (CON'T)

F. IF POSSIBLE, DO NOT STORE FUEL OR PETROLEUM PRODUCTS ON-SITE. IF FUEL/PRETROLEUM PRODUCTS ARE STORED ON SITE:

- USE SECONDARY CONTAINMENT MEASURES.
- HAVE EQUIPMENT AND MATERIALS ON SITE TO CONTAIN AND CLEAN UP SPILLS IN FUEL STORAGE AREAS OR ON BOARD MAINTENANCE AND FUELING VEHICLES.
- CONTAIN AND CLEAN UP SPILLS IMMEDIATELY.
- PRACTICE PREVENTIVE MAINTENANCE FOR ON-SITE EQUIPMENT.
- OVERSEE ALL FILLING OPERATIONS.

G. PRACTICE GOOD HOUSEKEEPING AND EDUCATE EMPLOYEES ON POLLUTION PREVENTION MEASURES.

- STORE ON SITE MATERIALS AND CHEMICALS IN A NEAT AND ORDERLY MANNER AND IN AREAS DESIGNATED FOR SUCH STORAGE.
- DISPOSE OF GARBAGE, RUBBISH, CONSTRUCTION AND SANITARY WASTE ROUTINELY.
- IMMEDIATELY CLEAN UP ANY SPILLS.
- IMMEDIATELY CLEAN UP ANY SEDIMENTS OR WASTE TRACKED ONTO PUBLIC HIGHWAYS OR TRANSPORTED ONTO ADJACENT PROPERTIES.
- USE DUST CONTROL METHODS.

H. FOR CONSTRUCTION WASTE:

- DESIGNATE A WASTE COLLECTION AREA.
- PROVIDE AN ADEQUATE NUMBER OF CONTAINERS WITH LIDS OR COVERS THAT CAN BE PLACED OVER CONTAINERS PRIOR TO RAINFALL.
- ARRANGE FOR WASTE COLLECTION ON A ROUTINE BASIS AND PRIOR TO CONTAINER OVERFLOW.
- IF A CONTAINER DOES SPILL, CLEAN UP IMMEDIATELY.
- COLLECT, REMOVE AND DISPOSE OF CONSTRUCTION WASTE IN APPROVED DISPOSAL AREAS.
- FOLLOW APPLICABLE FEDERAL, STATE AND LOCAL REQUIREMENTS FOR ALL DISPOSAL METHODS.

THE CONTRACTOR IS RESPONSIBLE FOR PROVIDING AND MAINTAINING TEMPORARY SANITARY FACILITIES. CONTRACT DOMESTIC WASTE HAULERS TO REGULARLY REMOVE THE SANITARY WASTE AND TO MAINTAIN THE FACILITIES IN GOOD WORKING ORDER.

I. IF FERTILIZERS ARE USED ON SITE:

- LIMIT THE APPLICATION OF FERTILIZERS TO THE MINIMUM AREA REQUIRED AND USE THE MINIMUM RECOMMENDED AMOUNTS.
- REDUCE THE EXPOSURE OF FERTILIZERS TO STORM WATER RUN OFF BY WORKING THE FERTILIZER INTO THE SOIL.
- APPLY FERTILIZER MORE FREQUENTLY BUT AT A LOWER APPLICATION RATE.

4. EROSION AND SEDIMENT CONTROL PRACTICES AND IMPLEMENTATION SCHEDULE

PRACTICE	INITIAL PLACEMENT	DURATION
SILT FENCE	PRIOR TO EARTH DISTURBANCE & IMMEDIATELY UPON STOCK-PILING OF SOIL STOCKPILES	UNTIL SITE STABILIZATION & UNTIL REMOVAL OF STOCK PILE
DUST CONTROL	UPON COMMENCEMENT OF SITE DISTURBANCE	UNTIL SITE STABILIZATION
VEHICLE WASHING	UPON COMMENCEMENT OF SITE DISTURBANCE	UNTIL SITE STABILIZATION
STABILIZED CONSTRUCTION ENTRANCE	PRIOR TO SITE DISTURBANCE	UNTIL SITE STABILIZATION
INLET PROTECTION	PRIOR TO EARTH DISTURBANCE	UNTIL SITE STABILIZATION
CONCRETE WASHOUT	UPON COMMENCEMENT OF CONCRETE ACTIVITIES	COMPLETION OF CONCRETE ACTIVITIES

5. EROSION AND SEDIMENT CONTROL INSPECTION AND MAINTENANCE SCHEDULE

A. INSPECT THE SILT FENCE AND CONSTRUCTION FENCE SURROUNDING SENSITIVE AREAS (WETLANDS) ON A NIGHTLY BASIS DURING CONSTRUCTION. COMPLETE REQUIRED MAINTENANCE, REPAIR OR REPLACEMENT IMMEDIATELY.

B. INSPECT ALL REMAINING EROSION AND SEDIMENT CONTROL DEVICES AFTER EACH RAIN EVENT AND ON A WEEKLY BASIS. COMPLETED REQUIRED MAINTENANCE, REPAIR OR REPLACEMENT IMMEDIATELY OR AS DIRECTED BY THE COR.

- SILT FENCE: INSPECT FOR TEARS, BULGING AND FOR AREAS WHERE IT HAS FALLEN DOWN. REPAIR OR REPLACE AS NECESSARY.
- EROSION CONTROL BLANKETS: CHECK FOR PROPER/MISSING ANCHORING, PLACEMENT DENSITY, DAMAGE DUE TO VANDALISM OR CONSTRUCTION ACTIVITIES. REPAIR OR REPLACE AS NECESSARY.
- STABILIZED CONSTRUCTION ENTRANCE: MAINTAIN SO THAT TRACKING OF SEDIMENT ONTO PUBLIC HIGHWAYS DOES NOT OCCUR. TOP DRESS AS REQUIRED.
- FABRIC INLET PROTECTION: CHECK FOR DAMAGED MATERIALS AND SEDIMENT ACCUMULATION. REPAIR OR REPLACE ANY DAMAGED FABRIC. REMOVE ACCUMULATED SEDIMENT.

EROSION CONTROL NOTES (CON'T)

- STONE AND BLOCK INLET PROTECTION: CHECK FOR DAMAGED MATERIALS AND ACCUMULATED SEDIMENT. REPAIR OR REPLACE MATERIALS OF CONSTRUCTION AS NEEDED. REMOVE ANY ACCUMULATED SEDIMENT.
- FOREBAYS: CHECK SIDE SLOPES FOR SCOUR, DAMAGE FROM RODENTS AND SEEPAGE. CONTINUOUSLY MONITOR THE FOREBAYS AND DETENTION PONDS FOR SEDIMENT ACCUMULATION. ONCE SEDIMENT ACCUMULATION HAS REACHED 12" IN DEPTH, REMOVE AND DISPOSED OF THE SEDIMENT OFF SITE. CHECK OUTLETS FOR SIGNS OF SCOUR AND OBSTRUCTIONS AND MAKE REPAIRS AS NECESSARY.
- RIP RAP OUTLETS: CHECK FOR OBSTRUCTIONS AND SCOUR AND REMOVE AND REPAIR AS NECESSARY.
- CATCH BASINS AND PIPING: CHECK FOR OBSTRUCTIONS AND SEDIMENT ACCUMULATION AND CLEAN AS NECESSARY.

6. SWPPP IMPLEMENTATION

THE CONTRACTOR AND SUB CONTRACTOR(S) ARE RESPONSIBLE FOR COMPLYING WITH AND IMPLEMENTING THE SWPPP. REFER TO SPECIFICATION "REGULATORY REQUIREMENTS" AND THE CONTRACTOR'S CERTIFICATION STATEMENT IN THE SWPPP.

THE ENGINEER OF RECORD IS RESPONSIBLE FOR PERFORMING AND DOCUMENTING THE INITIAL SITE ASSESSMENT AND PERFORMING THE WEEKLY SITE INSPECTING AS REQUIRED BY THE SPDES PERMIT.

7. CONSTRUCTION COMPLETION

UPON CONSTRUCTION COMPLETION:

A. INSPECT THE CATCH BASINS, STORM WATER MANHOLES AND STORM WATER CONVEYANCE SYSTEM FOR OBSTRUCTIONS OR SEDIMENT. REMOVE OBSTRUCTIONS AND CLEAN STRUCTURES AND PIPING AS NECESSARY.

B. FOREBAYS: INSPECT WEIRS FOR STRUCTURAL INTEGRITY AND OBSTRUCTIONS. CHECK EMBANKMENTS FOR SCOUR, SEEPAGE, DAMAGE FROM RODENTS OR UNWANTED PLANT GROWTH. MAKE REPAIRS AS NECESSARY. CHECK OUTLET PROTECTION FOR OBSTRUCTIONS AND SCOURING. MAKE ANY REPAIRS. SURVEY FOREBAYS, REMOVE ALL ACCUMULATED SEDIMENT, RETURN TO GRADES SHOWN ON THE GRADING PLAN.

UPON SITE STABILIZATION:

C. REMOVE ANY REMAINING TEMPORARY EROSION AND SEDIMENT CONTROL MEASURES. STABILIZE AREA.

8. WINTER OPERATIONS/WINTER SHUT DOWN

A. FOR WINTER OPERATIONS

- PLOW SNOW AND PILE ON PAVED AREAS. DO NOT PLOW SNOW ONTO GRASSED AREAS OR INTO WETLAND AREAS.
- CHECK DRAINAGE STRUCTURES WEEKLY AND AFTER SNOW EVENTS FOR CLOGGING OR FREEZING TO ENSURE STRUCTURES DRAIN FREELY.
- INSTALL AND MAINTAIN EROSION AND SEDIMENT CONTROL DEVICES PER THE CONTRACT DOCUMENTS.
- STABILIZE ALL BARE SOILS BY ESTABLISHING VEGETATION OR PROVIDING STRAW, MATTING, ROCK OR EROSION CONTROL PRODUCTS.
- PLACE EROSION AND SEDIMENT CONTROL DEVICES AT ALL SENSITIVE AREAS AND ALONG THE PERIMETER. THIS INCLUDES BUT IS NOT LIMITED TO SILT FENCE, STORM DRAIN INLET PROTECTION, CHECK DAMS AND PIPE OUTLET PROTECTION.
- PROTECT SOIL STOCKPILES WITH SILT FENCE PROTECTION AROUND THE PERIMETER AND STABILIZE WITH ESTABLISHED VEGETATION, STRAW, ROLLED EROSION CONTROL PRODUCT OR DURABLE COVERING.
- MAINTAIN CONSTRUCTION ENTRANCE DURING WINTER SHUTDOWN.
- PLOW SNOW TO ALLOW FOR ENTRANCE TO THE SITE ON A MONTHLY BASIS. PLOW SNOW AND STOCKPILE ONTO PAVED SURFACES. SNOW PLOWING AND STOCKPILING ONTO GRASSED OR INTO SENSITIVE AREAS WILL NOT BE ALLOWED.
- STABILIZATION MEASURES MUST BE IN PLACE, INCLUDING STABILIZED VEGETATION, WITHIN SEVEN (7) DAYS FROM THE DATE SOIL DISTURBING ACTIVITIES CEASE.

CONTRACTOR PARKING, STAGING AND STORAGE NOTES:

1. CONTRACTOR STAGING OR STORAGE AREAS ARE PROVIDED AS NOTED IN THESE PLANS.

2. SEE ALSO DIVISION 1 SECTIONS OF THE PROJECT SPECIFICATIONS FOR ADDITIONAL INFORMATION.

ISSUE FOR BID	08-09-2024
Revisions:	Date:

CONSULTANT

Engineering
Architecture
Landscape Architecture
and Land Surveying, P.C.

ARCHITECT/ENGINEER OF RECORD

BANCROFT ARCHITECTS + ENGINEERS
3300 Dundee Rd.
Northbrook, IL 60062
T: 847.952.9362
www. bancroft-ae.com

STAMP
Registration Expires 10.31.2026
STATE OF NEW YORK · MICHAEL D. PANTILIONE · LICENSED PROFESSIONAL ENGINEER · 074753

Office of Construction and Facilities Management

VA U.S. Department of Veterans Affairs

Drawing Title: CIVIL-GENERAL NOTES	Phase: ISSUE FOR BID	Project Title: PARKING RAMP EXPANSION	Project Number: 528-18-375
			Building Number: 29
Approved: Project Director		Location: 3495 BAILEY AVE., BUFFALO, NY 14215	Drawing Number: C001
		Issue Date: 08-09-2024 / Checked / Drawn	

VA FORM 08 - 6231

6/14/2009 12:39:03 PM

F:\MJ\1663 - Buffalo VAMJ\1663.01_C001-GENERAL NOTES.dwg

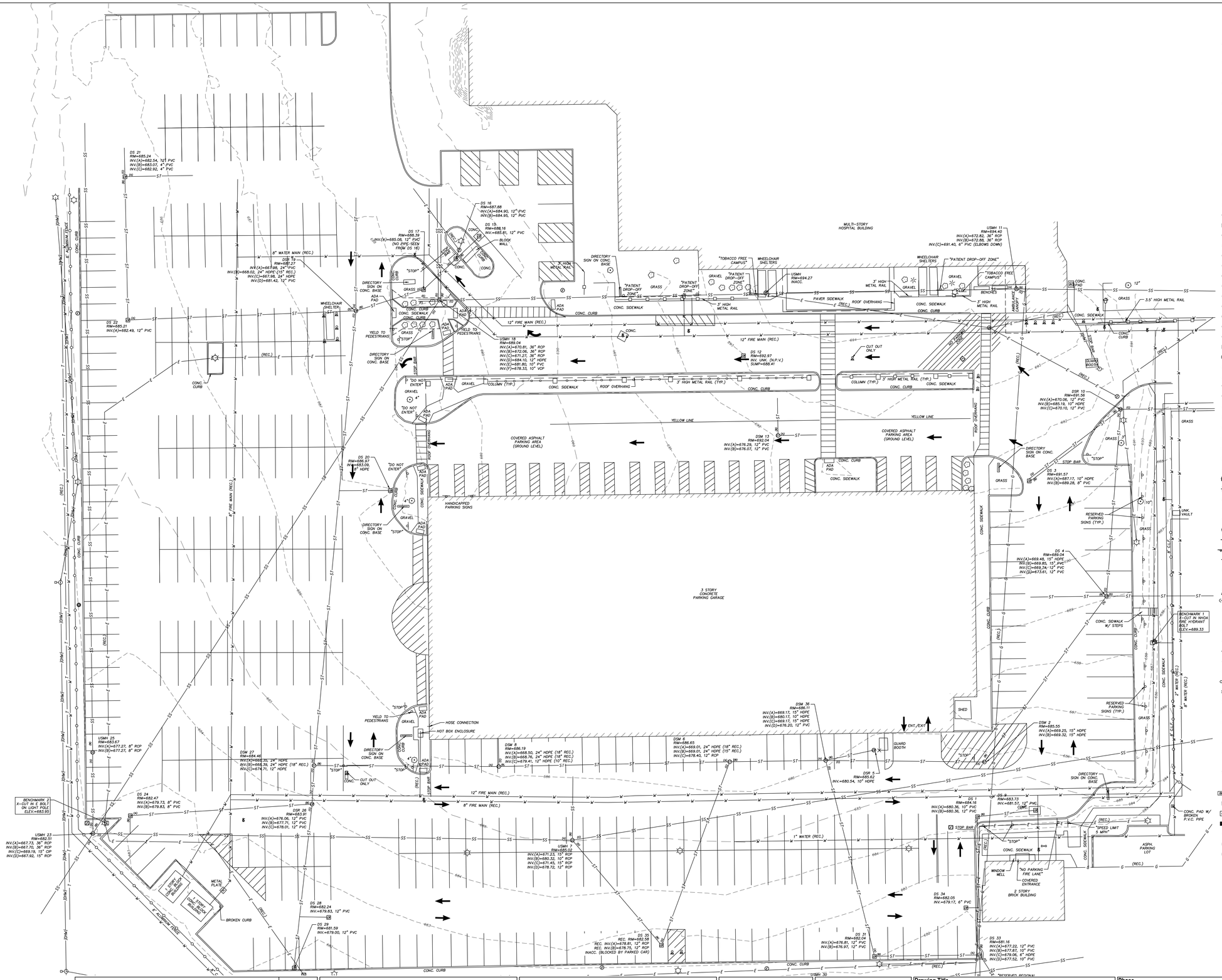

EXISTING LEGEND

- BENCHMARK
- CONTROL BASELINE
- CONTROL BASELINE TIE
- CONTROL BASELINE SPUR
- SPIKE POINT
- STAKE POINT
- NAIL POINT
- RAILROAD SPIKE POINT
- CONTROL SURVEY MARKER
- HORIZ. PHOTOGRAMMETRY POINT
- VERT. PHOTOGRAMMETRY POINT
- MONUMENT POINT
- MISC MONUMENT POINT
- CROSS CUT POINT
- DRILL HOLE POINT
- FENCE LOCATION POINT
- CAPPED IRON PIPE
- IRON PIPE
- SANITARY MANHOLE
- CATCH BASIN
- CATCH BASIN - ROUND
- CURB INLET
- STORM MANHOLE
- WATER MANHOLE
- ELECTRIC MANHOLE
- COMMUNICATION MANHOLE
- GAS MANHOLE
- STEAM MANHOLE
- TELEPHONE MANHOLE
- UNKNOWN MANHOLE
- DRYWELL
- YARD DRAIN
- SEWER WETWELL
- WATER WELL
- UNKNOWN WELL
- FIRE HYDRANT
- FIRE HOSE CONNECTION
- SPIGOT
- GATE VALVE
- POST INDICATOR VALVE
- WATER METER
- ELECTRIC METER
- TELEPHONE BOX
- UTILITY POLE
- DECIDUOUS TREE
- CONIFEROUS TREE
- DECIDUOUS SHRUB
- CONIFEROUS SHRUB
- TREE STUMP
- TREE WITH WIRE
- SINGLE POST SIGN
- DOUBLE POST SIGN
- DELINEATORS
- PARKING METER
- WOOD POST
- BOLLARD
- GUY WIRE
- GUIDE POST
- GUIDE ANCHOR
- BORE HOLE
- MONITORING WELL
- GAS VALVE
- UNKNOWN VALVE
- UNKNOWN VENT
- UNKNOWN FILL CAP
- TOP OF HOOD
- ELECTRICAL JUNCTION BOX
- JUNCTION BOX
- FIRE ALARM
- UNKNOWN UTILITY BOX
- WETLAND FLAG
- CLEANOUT
- DRAINAGE INVERT
- CURB STOP
- ROOF DRAIN
- BENCH
- AC UNIT
- GENERATOR
- ADA PAD
- FLAG POLE
- PAPER BOX
- MAILBOXPARKING METER
- ROCK
- REFERENCE MARKER SIGN
- GAS VENT
- FUEL PUMP
- TELEPHONE LINE MARKER
- FIBER OPTIC MARKER
- OIL LINE MARKER
- GAS METER
- GAS MARKER
- UTILITY MARKOUT POINT
- DEAD UTILITY POLE
- LIGHT POLE
- SINGLE LIGHT
- DOUBLE LIGHT
- UTILITY POLE WITH LIGHT
- PEDESTRIAN POLE
- TRAFFIC CONTROL SIGNAL POLE
- TRAFFIC CONTROL BOX JUNCTION
- TRAFFIC CONTROL BOX PULL
- LIGHT POST
- FLOODLIGHT
- SECURITY LIGHT
- ELECTRIC TRANSMISSION POLE
- GROUND ROD
- OUTLET
- BUILDING LINE
- SPOT ELEVATION
- MINOR CONTOUR
- MAJOR CONTOUR
- WOODS LINE
- PLANTING BED
- CULVERT
- STORM LINE
- SANITARY LINE
- COMBINED SEWER
- OVERHEAD SANITARY LINE
- SANITARY FORCEMAIN LINE
- OVERHEAD SAN. FORCEMAIN
- OVERHEAD POWER LINE
- ELECTRIC LINE
- ELECTRIC AND COMM. LINE
- WATER LINE
- IRRIGATION WATER LINE
- COMMUNICATION LINE
- OVERHEAD COMM. LINE
- TELEPHONE LINE
- OVERHEAD TEL. LINE
- FIBER OPTIC LINE
- OVERHEAD FIBER OPTIC LINE
- GAS LINE
- OVERHEAD GAS LINE
- FUEL LINE
- OVERHEAD FUEL LINE
- OVERHEAD WIRES
- CABLE TV
- OVERHEAD CABLE TV
- OVERHEAD ELECTRIC, TELEPHONE, CABLE
- TRAFFIC LINE
- OVERHEAD TRAFFIC LINE
- STEAM LINE
- UNIDENTIFIED PIPE
- UNIDENTIFIED CABLE
- UNID. UNDERGROUND LINE DITCH
- WETLAND LIMITS
- SILT FENCE
- CHAIN LINK FENCE
- WOOD FENCE
- WIRE FENCE
- STONE FENCE
- GUIDERAIL
- RAILING
- EDGE OF WATER
- ACCESS EASEMENT
- RIGHT-OF-WAY EASEMENT
- STORM LINE
- UTILITY LINE
- PROPERTY LINE
- ADJOINING PROPERTY LINE
- SUBDIVISION LINE

ISSUE FOR BID	08-09-2024
Revisions:	Date:

CONSULTANT

Engineering Architecture Landscape Architecture and Land Surveying, P.C.

ARCHITECT/ENGINEER OF RECORD

BANCROFT ARCHITECTS + ENGINEERS

3300 Dundee Rd. Northbrook, IL 60062 T: 847.952.9362 www.bancroft-ae.com

STAMP

Registration Expires 10.31.2026

LICENSED PROFESSIONAL ENGINEER MICHAEL D. PANICCI 074753 STATE OF NEW YORK

Office of Construction and Facilities Management

VA U.S. Department of Veterans Affairs

Drawing Title: CIVIL-EXISTING CONDITIONS PLAN	Phase: ISSUE FOR BID	Project Title: PARKING RAMP EXPANSION	Project Number: 528-18-375
			Building Number: 29
Approved: Project Director		Location: 3495 BAILEY AVE., BUFFALO, NY 14215	Drawing Number: C100
		Issue Date: 08-09-2024 / Checked / Drawn	

F:\MJ\1663 - Buffalo VAMJ\1663.01_C100-EXISTING CONDITIONS.dwg

6/14/2009 12:39:03 PM

VA FORM 08 - 6231

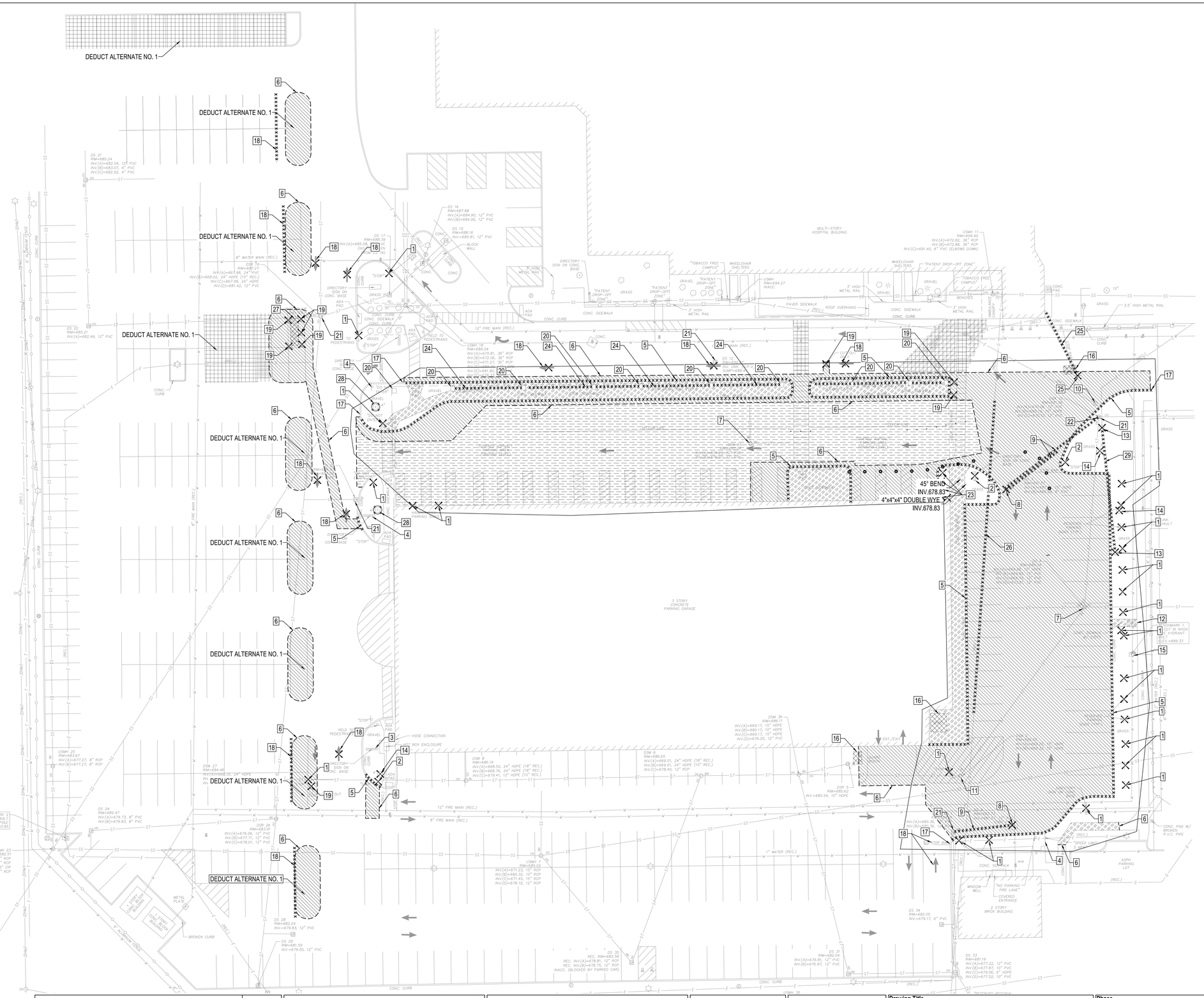

REMOVAL KEY NOTES:

1. REMOVE SIGN, STORE FOR REUSE
2. REMOVE SIGN, RETURN TO VA
3. REMOVE SIGN, BASE AND POSTS TO REMAIN
4. SIGN TO REMAIN, PROTECT DURING ENTIRE CONSTRUCTION PROCESS
5. REMOVE CONCRETE CURBING TO EXTENTS SHOWN
6. SAWCUT PAVEMENT
7. STORM SEWER STRUCTURE TO REMAIN, ADJUST FRAME & GRATE/COVER TO MATCH PROPOSED GRADE, SEE SHEET C140
8. REMOVE CATCH BASIN IN ITS ENTIRETY
9. REMOVE STORM SEWER PIPE
10. ELECTRIC MANHOLE TO REMAIN, PROTECT DURING ENTIRE CONSTRUCTION PROCESS
11. STORM SEWER MANHOLE TO REMAIN, PROTECT DURING ENTIRE CONSTRUCTION PROCESS
12. REMOVE CONCRETE STAIRS AND FOUNDATION
13. REMOVE LIGHT POLE AND FOUNDATION, REFER TO ELECTRICAL PLANS
14. REMOVE TREE, INCLUDING STUMP
15. FIRE HYDRANT TO REMAIN, MAINTAIN ACCESS DURING ENTIRE CONSTRUCTION PROCESS
16. REMOVE BUILDING AND STORE, COORDINATE NEW LOCATION WITH COR
17. CONCRETE CURB TO REMAIN, PROTECT DURING ENTIRE CONSTRUCTION PROCESS
18. REMOVE EXISTING STRIPING
19. REMOVE BOLLARD AND FOOTING
20. PROTECT COLUMN DURING ENTIRE CONSTRUCTION PROCESS
21. CATCH BASIN TO REMAIN, PROTECT DURING ENTIRE CONSTRUCTION PROCESS
22. BRICK AND MORTAR PIPE PENETRATION INTO STRUCTURE. MORTAR BOTH INSIDE AND OUTSIDE OF STRUCTURE.
23. REMOVE SHRUBS
24. REMOVE METAL GUIDERAIL AND FOOTING
25. REMOVE OVERHEAD ELECTRICAL AND POWER POLE, REFER TO ELECTRICAL PLANS
26. REMOVE NATURAL GAS LINE TO EXTENTS SHOWN
27. REMOVE WHEELCHAIR SHELTER, TURN OVER TO VA
28. TREE TO REMAIN, PROTECT DURING ENTIRE CONSTRUCTION PROCESS
29. REMOVE ELECTICAL CONDUIT TO EXTENTS SHOWN

REMOVALS NOTES:

1. REFER TO ELECTRICAL PLANS FOR ELECTRICAL REMOVALS.
2. PROTECT EXISTING BUILDING FACADES. REPAIR ANY DAMAGE DURING CONSTRUCTION AT NO ADDITIONAL COST TO THE OWNER, INCLUDING DAMAGE TO EXISTING ASPHALT TO REMAIN.
3. THE CONTRACTOR, AT THEIR OWN RISK, MAY RECYCLE ON-SITE MATERIALS FOR USE ON THE PROJECT SITE IF THE INSTALLED MATERIAL MEETS THE SPECIFICATIONS FOR THAT MATERIAL. THE BID PRICE SHALL BE BASED UPON THE REMOVAL AND DISPOSAL OF THE UNCLASSIFIED EXCAVATION MATERIALS FOR PLACEMENT OF NEW PAVEMENT AND SIDEWALK SECTIONS, INCLUSIVE OF SUBBASE MATERIALS.

REMOVALS LEGEND

- LINEAR OBJECT REMOVAL
- KEY NOTE
- OBJECT REMOVAL
- BUILDING REMOVAL
- ASPHALT REMOVAL, DRIVES
- PAVEMENT SANDBLASTING
- ASPHALT MILLING
- CONCRETE REMOVAL
- TEMPORARY TREE PROTECTION

ISSUE FOR BID	08-09-2024
Revisions:	Date:

CONSULTANT

Engineering
Architecture
Landscape Architecture
and Land Surveying, P.C.

ARCHITECT/ENGINEER OF RECORD

BANCROFT ARCHITECTS + ENGINEERS
3300 Dundee Rd.
Northbrook, IL 60062
T: 847.952.9362
www.bancroft-ae.com

STAMP
Registration Expires
10.31.2026

LICENSED PROFESSIONAL ENGINEER
STATE OF NEW YORK
MICHAEL D. PANICCIA
074753

Office of Construction and Facilities Management

VA U.S. Department of Veterans Affairs

Drawing Title: CIVIL-REMOVALS PLAN	Phase: ISSUE FOR BID	Project Title: PARKING RAMP EXPANSION	Project Number: 528-18-375
			Building Number: 29
Approved: Project Director		Location: 3495 BAILEY AVE., BUFFALO, NY 14215	Drawing Number: C110
		Issue Date: 08-09-2024 / Checked / Drawn	

6/14/2009 12:39:03 PM

F:\MJ\1663 - Buffalo VAMJ\1663.01_C110-REMOVALS.dwg

VA FORM 08 - 6231

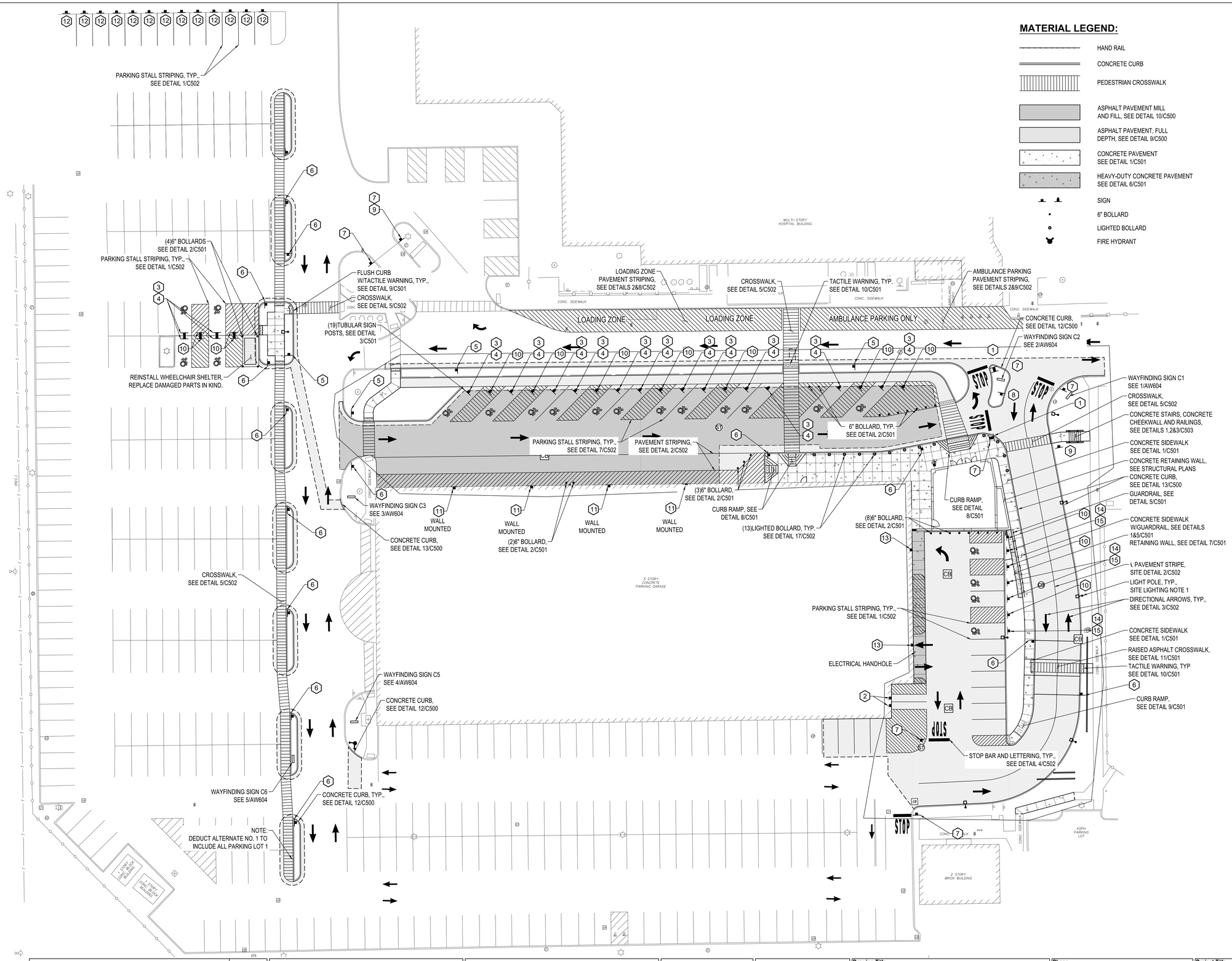

MATERIAL LEGEND:

- HAND RAIL
- CONCRETE CURB
- PEDESTRIAN CROSSWALK
- ASPHALT PAVEMENT MILL AND FILL, SEE DETAIL 10/C500
- ASPHALT PAVEMENT, FULL DEPTH, SEE DETAIL 9/C500
- CONCRETE PAVEMENT SEE DETAIL 1/C501
- HEAVY-DUTY CONCRETE PAVEMENT SEE DETAIL 6/C501
- SIGN
- 6" BOLLARD
- LIGHTED BOLLARD
- FIRE HYDRANT

SITE LIGHTING NOTES:

1. SITE LIGHTING SHOWN FOR REFERENCE ONLY. REFER TO E-SERIES DRAWINGS FOR DESIGN INFORMATION.

MATERIAL PLAN NOTES:

1. SUBBASE MATERIAL AND THE VARIOUS ASPHALT CONCRETE MATERIALS CALLED FOR IN THESE DRAWINGS SHALL CONFORM WITH THE REFERENCED SECTION OF THE NEW YORK STATE DEPARTMENT OF TRANSPORTATION STANDARD SPECIFICATIONS FOR CONSTRUCTION AND MATERIALS, LATEST EDITION. CONSTRUCTION SHALL BE AS FURTHER SET FORTH IN THOSE SPECIFICATIONS AND AS OTHERWISE PROVIDED FOR IN THESE DRAWINGS.
2. PLACE ASPHALT CONCRETE MIXTURE ON PREPARED SURFACE, SPREAD AND STRIKE-OFF USING A SELF-PROPELLED PAVING MACHINE, WITH VIBRATING SCREED. PLACEMENT IN INACCESSIBLE AND SMALL AREAS MAY BE BY HAND.
3. PROVIDE JOINTS BETWEEN OLD AND NEW PAVEMENTS OR BETWEEN SUCCESSIVE DAY'S WORK.
4. INSTALL TACK COAT AS SPECIFIED.
5. AFTER COMPLETION OF PAVING AND SURFACING OPERATIONS, MAINTAIN CLEAN SURFACES FROM EXCESS OR SPILLED ASPHALT, GRAVEL, STONE MATERIALS AND DEBRIS.
6. PROVIDE TOPSOIL AND HYDROSEED IN AREAS OF EXISTING LAWN DISTURBED OR NEW LAWN CREATED. REFER TO LANDSCAPE PLAN.

STANDARD SIGNAGE SCHEDULE

KEY NO.	SIGN FACE	NUMBER DESIGNATION	MIN. SIZE	MOUNTING DETAIL
1	DO NOT ENTER	MUTCD R5-1	30x30	4/C501
2	WRONG WAY		12x18	WALL MOUNTED
3	RIGHT TURN ONLY	MUTCD R7-8	12x18	3/C501
4	VAN ACCESS	MUTCD R7-8p	18x9	3/C501
5		MUTCD W11-2L	30x30	4/C501
6		MUTCD W11-2R	30x30	4/C501
7	STOP	MUTCD R1-1	30x30	4/C501
8		MUTCD R3-1	30x30	4/C501
9		MUTCD R3-2	30x30	4/C501
10	NO PARKING ANY TIME	MUTCD R7-1	12x18	3/C501
11	NO PARKING ANY TIME	MUTCD R7-1	12x18	WALL MOUNTED
12		VA PL-12.03	12x18	4/C501
13	7'-0"	W12-2	30x30	WALL MOUNTED
14	RIGHT TURN ONLY	MUTCD R7-8	12x18	3/C501
15	VAN ACCESS	MUTCD R7-8p	18x9	3/C501

TRUE NORTH AT THE 78°35' MERIDIAN OF WEST LONGITUDE

20' 10' 0 20'

ISSUE FOR BID	08-09-2024
Revisions:	Date:

CONSULTANT

Engineering
Architecture
Landscape Architecture
and Land Surveying, P.C.

ARCHITECT/ENGINEER OF RECORD

BANCROFT ARCHITECTS + ENGINEERS

3300 Dundee Rd.
Northbrook, IL 60062
T: 847.952.9362
www.bancroft-ae.com

STAMP Registration Expires 10.31.2026

STATE OF NEW YORK · MICHAEL D. PARCELL · 074751 · LICENSED PROFESSIONAL ENGINEER

Office of Construction and Facilities Management

VA U.S. Department of Veterans Affairs

Drawing Title: CIVIL-MATERIALS, SIGNAGE AND STRIPING PLAN	Phase: ISSUE FOR BID	Project Title: PARKING RAMP EXPANSION	Project Number: 528-18-375
			Building Number: 29
Approved: Project Director		Location: 3495 BAILEY AVE., BUFFALO, NY 14215	Drawing Number: C120
		Issue Date: 08-09-2024 / Checked / Drawn	

6/14/2009 12:39:03 PM

F:\MA\1663 - Buffalo VAMA\1663.01_C120-MATERIALS.dwg

VA FORM 08 - 6231

LAYOUT PLAN NOTES:

1. THE CONTRACTOR SHALL BE RESPONSIBLE FOR DOCUMENTING ALL FIELD LAYOUT. THE CONTRACTOR SHALL TAKE TIES TO ALL UTILITY CONNECTIONS AND PROVIDE MARKED-UP AS BUILT PLANS FOR ALL UTILITIES SHOWING TIES TO CONNECTIONS, BENDS, VALVES, LENGTHS OF LINES AND INVERTS.
2. CONTRACTOR SHALL UTILIZE A LICENSED NYS SURVEYOR TO PROVIDE STAKING AND ASSIST THE CONTRACTOR WITH PROPER LAYOUT AND COLLECTIVE AS-BUILT INFORMATION.
3. AS-BUILT PLANS SHALL BE REVIEWED BY THE VA AND THE AOR. THE CONTRACTOR SHALL PROVIDE ANY CORRECTION OR ADDITIONS TO THE SATISFACTION OF THE VA AND THE AOR BEFORE UTILITIES WILL BE ACCEPTED.

INSET
SCALE: 1" = 10'

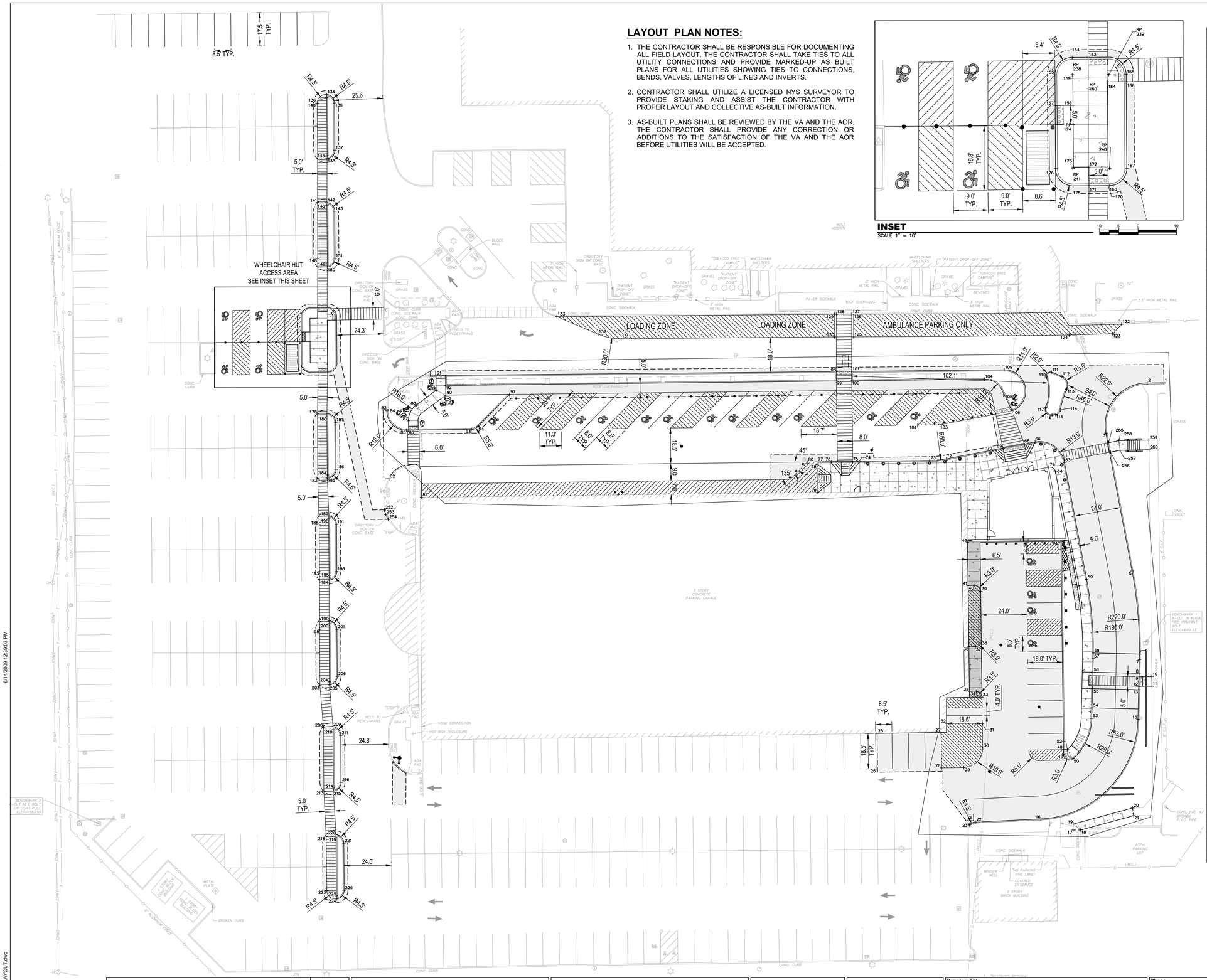

POINT COORDINATE SCHEDULE			POINT COORDINATE SCHEDULE			POINT COORDINATE SCHEDULE		
POINT #	NORTHING	EASTING	POINT #	NORTHING	EASTING	POINT #	NORTHING	EASTING
1	1,075,078.61	1,087,220.02	19	1,074,849.27	1,087,172.76	38	1,074,944.51	1,087,125.09
2	1,075,078.54	1,087,211.28	20	1,074,857.65	1,087,203.69	39	1,074,970.27	1,087,124.76
3	1,075,052.44	1,087,189.84	21	1,074,853.66	1,087,204.25	40	1,074,973.23	1,087,121.72
4	1,075,056.54	1,087,211.46	22	1,074,850.32	1,087,122.02	41	1,074,973.19	1,087,118.22
5	1,074,980.84	1,087,203.42	23	1,074,848.83	1,087,118.89	42	1,074,888.64	1,087,115.81
6	1,074,937.62	1,087,207.28	24	1,074,845.80	1,087,122.24	43	1,074,915.32	1,087,122.47
7	1,074,934.71	1,087,207.21	25	1,074,896.39	1,087,070.91	44	1,074,944.47	1,087,122.09
8	1,074,927.62	1,087,207.04	26	1,074,877.99	1,087,070.44	45	1,074,970.23	1,087,121.76
9	1,074,925.87	1,087,207.00	27	1,074,896.87	1,087,104.17	46	1,074,995.62	1,087,117.94
10	1,074,925.89	1,087,213.69	28	1,074,878.48	1,087,104.44	47	1,074,996.24	1,087,166.43
11	1,074,920.89	1,087,213.76	29	1,074,878.64	1,087,115.95	48	1,074,887.96	1,087,167.82
12	1,074,920.87	1,087,206.88	30	1,074,888.77	1,087,125.81	49	1,074,885.49	1,087,167.85
13	1,074,919.12	1,087,206.84	31	1,074,901.61	1,087,125.64	50	1,074,883.30	1,087,172.86
14	1,074,909.12	1,087,206.61	32	1,074,901.63	1,087,107.01	51	1,074,885.53	1,087,170.85
14	1,074,909.12	1,087,206.61	33	1,074,915.26	1,087,125.47	52	1,074,887.98	1,087,169.82
15	1,074,903.64	1,087,206.48	34	1,074,918.32	1,087,122.43	53	1,074,904.20	1,087,182.48
16	1,074,851.94	1,087,156.02	35	1,074,918.28	1,087,118.92	54	1,074,909.69	1,087,182.61
17	1,074,846.22	1,087,172.75	36	1,074,941.43	1,087,118.65	55	1,074,919.68	1,087,182.85
18	1,074,846.22	1,087,176.77	37	1,074,941.47	1,087,122.13	56	1,074,928.18	1,087,183.05

POINT COORDINATE SCHEDULE			POINT COORDINATE SCHEDULE			POINT COORDINATE SCHEDULE		
POINT #	NORTHING	EASTING	POINT #	NORTHING	EASTING	POINT #	NORTHING	EASTING
57	1,074,935.27	1,087,183.21	79	1,075,021.60	1,087,039.87	100	1,075,079.65	1,087,057.79
58	1,074,938.18	1,087,183.28	80	1,075,037.46	1,087,034.68	101	1,075,084.53	1,087,057.76
59	1,074,976.37	1,087,179.84	81	1,075,019.07	1,086,834.36	102	1,075,056.63	1,087,092.03
62	1,075,031.80	1,087,160.67	82	1,075,028.74	1,086,817.36	103	1,075,056.77	1,087,103.55
62	1,075,031.80	1,087,160.67	83	1,075,064.67	1,086,816.27	104	1,075,080.50	1,087,126.71
63	1,075,037.21	1,087,168.31	84	1,075,064.12	1,086,816.27	106	1,075,064.07	1,087,141.12
64	1,075,032.36	1,087,163.62	85	1,075,054.04	1,086,826.39	109	1,075,085.33	1,087,137.04
66	1,075,047.83	1,087,153.06	86	1,075,054.05	1,086,827.53	110	1,075,081.63	1,087,158.97
68	1,075,046.78	1,087,147.50	87	1,075,058.87	1,086,827.47	111	1,075,084.14	1,087,161.52
69	1,075,044.66	1,087,136.31	88	1,075,067.02	1,086,831.51	112	1,075,081.93	1,087,167.00
70	1,075,043.60	1,087,130.76	89	1,075,074.71	1,086,841.86	113	1,075,075.35	1,087,169.48
71	1,075,034.75	1,087,160.13	90	1,075,072.22	1,086,846.89	114	1,075,064.50	1,087,166.15
72	1,075,039.10	1,087,106.98	91	1,075,082.36	1,086,841.79	115	1,075,062.07	1,087,163.75
73	1,075,038.23	1,087,098.24	92	1,075,077.22	1,086,846.84	116	1,075,061.71	1,087,161.85
74	1,075,037.80	1,087,061.60	93	1,075,054.44	1,086,860.16	117	1,075,065.77	1,087,158.50
75	1,075,037.76	1,087,058.34	94	1,075,055.94	1,086,863.68	118	1,075,065.02	1,087,163.20
76	1,075,037.62	1,087,047.09	97	1,075,072.60	1,086,879.96	122	1,075,109.05	1,087,198.01
77	1,075,037.53	1,087,039.68	98	1,075,084.45	1,087,049.77	123	1,075,104.12	1,087,193.36
78	1,075,036.12	1,087,039.69	99	1,075,079.55	1,087,049.79	124	1,075,103.44	1,087,170.72

POINT COORDINATE SCHEDULE			POINT COORDINATE SCHEDULE			POINT COORDINATE SCHEDULE		
POINT #	NORTHING	EASTING	POINT #	NORTHING	EASTING	POINT #	NORTHING	EASTING
125	1,075,102.49	1,087,058.77	146	1,075,170.63	1,086,785.17	171	1,075,084.17	1,086,780.50
126	1,075,114.27	1,087,058.72	148	1,075,143.25	1,086,780.35	172	1,075,089.04	1,086,780.46
127	1,075,114.26	1,087,057.76	149	1,075,140.43	1,086,785.33	173	1,075,089.01	1,086,776.46
128	1,075,114.23	1,087,049.77	150	1,075,138.83	1,086,785.32	174	1,075,100.07	1,086,776.39
129	1,075,114.23	1,087,048.85	151	1,075,143.33	1,086,789.35	175	1,075,084.14	1,086,776.37
130	1,075,102.45	1,087,048.90	153	1,075,117.56	1,086,780.27	176	1,075,088.61	1,086,771.84
131	1,075,101.51	1,086,938.01	154	1,075,117.53	1,086,776.15	178	1,075,062.63	1,086,780.25
132	1,075,103.90	1,086,926.00	155	1,075,113.00	1,086,771.68	179	1,075,062.56	1,086,785.14
133	1,075,113.00	1,086,904.63	157	1,075,105.04	1,086,771.76	180	1,075,060.94	1,086,785.15
134	1,075,228.45	1,086,785.07	158	1,075,105.07	1,086,776.36	181	1,075,058.09	1,086,789.67
135	1,075,224.00	1,086,789.10	159	1,075,112.12	1,086,776.31	183	1,075,028.90	1,086,780.36
136	1,075,226.85	1,086,785.08	160	1,075,112.15	1,086,780.31	184	1,075,030.73	1,086,785.36
137	1,075,199.55	1,086,789.26	160	1,075,112.15	1,086,780.31	185	1,075,029.11	1,086,785.37
138	1,075,195.04	1,086,785.24	164	1,075,111.18	1,086,785.31	186	1,075,033.64	1,086,789.84
140	1,075,223.94	1,086,780.10	165	1,075,113.12	1,086,790.16	188	1,075,004.94	1,086,781.12
141	1,075,172.37	1,086,780.26	166	1,075,111.21	1,086,790.17	189	1,075,009.45	1,086,786.13
143	1,075,167.79	1,086,789.19	167	1,075,088.74	1,086,790.33	190	1,075,007.85	1,086,786.13
144	1,075,167.76	1,086,784.69	168	1,075,084.21	1,086,785.86	191	1,075,005.01	1,086,790.12
145	1,075,196.64	1,086,785.25	170	1,075,084.20	1,086,785.50	193	1,074,980.52	1,086,781.28

POINT COORDINATE SCHEDULE			POINT COORDINATE SCHEDULE			POINT COORDINATE SCHEDULE		
POINT #	NORTHING	EASTING	POINT #	NORTHING	EASTING	POINT #	NORTHING	EASTING
194	1,074,976.05	1,086,786.31	227	1,075,035.04	1,087,155.47	246	1,074,950.50	1,086,785.81
195	1,074,977.65	1,086,786.30	228	1,075,064.02	1,086,826.26	247	1,074,926.04	1,086,785.97
196	1,074,980.55	1,086,790.28	229	1,075,059.43	1,086,860.11	248	1,074,895.40	1,086,787.83
198	1,074,950.50	1,086,781.39	230	1,075,070.48	1,087,125.82	249	1,074,870.94	1,086,788.00
199	1,074,954.97	1,086,786.28	231	1,075,074.33	1,087,137.15	250	1,074,839.30	1,086,789.40
200	1,074,953.37	1,086,786.29	232	1,075,077.39	1,087,164.91	251	1,074,814.85	1,086,789.56
201	1,074,950.53	1,086,790.31	233	1,075,082.25	1,087,160.87	252	1,075,012.60	1,086,815.00
203	1,074,921.23	1,086,781.49	234	1,075,064.66	1,087,161.29	253	1,075,010.11	1,086,815.63
204	1,074,923.17	1,086,786.48	235	1,075,199.52	1,086,784.77	254	1,075,007.60	1,086,817.00
205	1,074,921.59	1,086,786.47	236	1,075,223.99	1,086,784.69	255	1,075,047.52	1,087,191.28
206	1,074,926.07	1,086,790.47	237	1,075,143.30	1,086,784.85	256	1,075,042.61	1,087,192.21
208	1,074,899.66	1,086,783.29	238	1,075,113.03	1,086,776.16	257	1,075,043.54	1,087,197.11
209	1,074,899.88	1,086,788.29	239	1,075,113.09	1,086,785.66	258	1,075,048.53	1,087,196.59
210	1,074,898.28	1,086,788.30	240	1,075,088.71	1,086,785.83	259	1,075,048.83	1,087,212.14
211	1,074,895.43	1,086,792.33	241	1,075,088.64	1,086,776.34	260	1,075,043.83	1,087,212.24
213	1,074,866.47	1,086,783.51	242	1,075,058.06	1,086,785.17			
214	1,074,868.07	1,086,788.51	243	1,075,033.61	1,086,785.34			
219	1,074,842.18	1,086,789.87	244	1,075,004.98	1,086,785.62			
224	1,074,810.38	1,086,790.09	245	1,074,980.52	1,086,785.78			

ISSUE FOR BID	08-09-2024
Revisions:	Date:

CONSULTANT

Engineering Architecture Landscape Architecture and Land Surveying, P.C.

ARCHITECT/ENGINEER OF RECORD

BANCROFT ARCHITECTS + ENGINEERS
3300 Dundee Rd.
Northbrook, IL 60062
T: 847.952.9362
www.bancroft-ae.com

STAMP
Registration Expires 10.31.2026
STATE OF NEW YORK — MICHAEL D. PANTELL — 087475 — LICENSED PROFESSIONAL ENGINEER

Office of Construction and Facilities Management

VA U.S. Department of Veterans Affairs

Drawing Title: CIVIL-LAYOUT PLAN	Phase: ISSUE FOR BID	Project Title: PARKING RAMP EXPANSION	Project Number: 528-18-375
			Building Number: 29
Approved: Project Director		Location: 3495 BAILEY AVE., BUFFALO, NY 14215	Drawing Number: C130
		Issue Date: 08-09-2024 / Checked / Drawn	

F:\MJ\1663 - Buffalo VA\MJ1663.01_C130-LAYOUT.dwg
6/14/2009 12:39:03 PM
VA FORM 08 - 6231

NOTES:

1. CONTRACTOR TO COORDINATE WITH AOR ALL UTILITIES IN THIS AREA PRIOR TO CONSTRUCTION TO AVOID CONFLICTS IN FUTURE WORK.
2. REFER TO SHEET C-130 LAYOUT PLAN REGARDING THE CONTRACTOR'S RESPONSIBILITY IN DOCUMENTING UTILITY INSTALLATION.

LEGEND:

- STORM SEWER LINE
- STORM SEWER UNDERDRAIN LINE
- WATER LINE
- GAS LINE BY OTHERS
- ELECTRIC LINE BY OTHERS
- IN-PAVEMENT INLET FILTER
- CATCH BASIN
- STORM SEWER MANHOLE
- LIGHT POLE
- STORM SEWER CLEANOUT

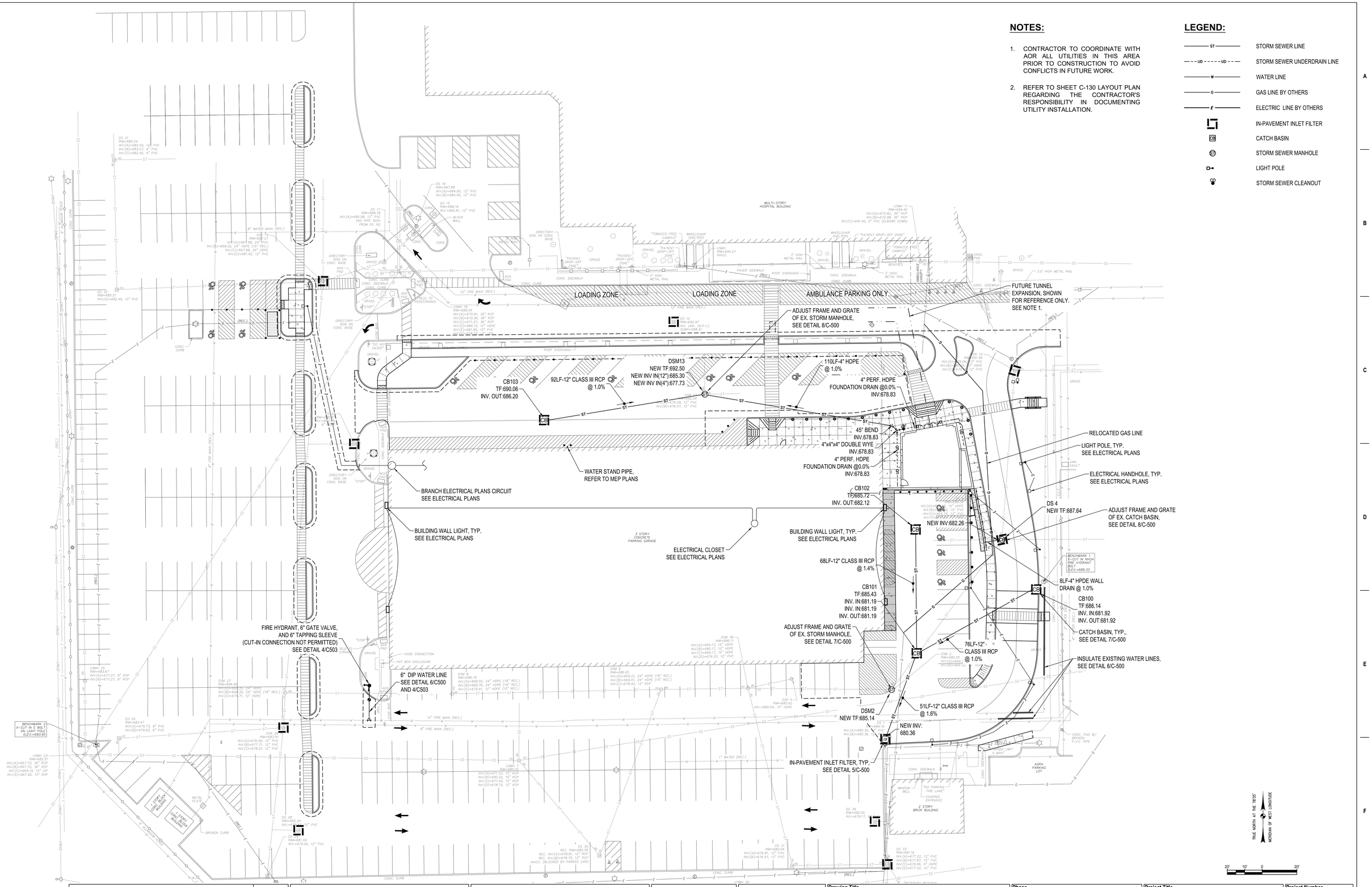

ISSUE FOR BID	08-09-2024
Revisions:	Date:

CONSULTANT

Engineering Architecture Landscape Architecture and Land Surveying, P.C.

ARCHITECT/ENGINEER OF RECORD

BANCROFT ARCHITECTS + ENGINEERS

3300 Dundee Rd. Northbrook, IL 60062 T: 847.952.9362 www. bancroft-ae.com

STAMP Registration Expires 10.31.2026

STATE OF NEW YORK · MICHAEL D. PANICHI · 074751 · LICENSED PROFESSIONAL ENGINEER

Office of Construction and Facilities Management

VA U.S. Department of Veterans Affairs

Drawing Title: CIVIL-UTILITIES AND EROSION AND SEDIMENT CONTROL PLAN AND PROFILE

Approved: Project Director

Phase: ISSUE FOR BID

Project Title: PARKING RAMP EXPANSION

Location: 3495 BAILEY AVE., BUFFALO, NY 14215

Issue Date: 08-09-2024 | Checked | Drawn

Project Number: 528-18-375

Building Number: 29

Drawing Number: C140

F:\MJ1663 - Buffalo VA\MJ1663.01_C140-UTILITY AND EC.dwg

6/14/2009 12:39:03 PM

VA FORM 08 - 6231

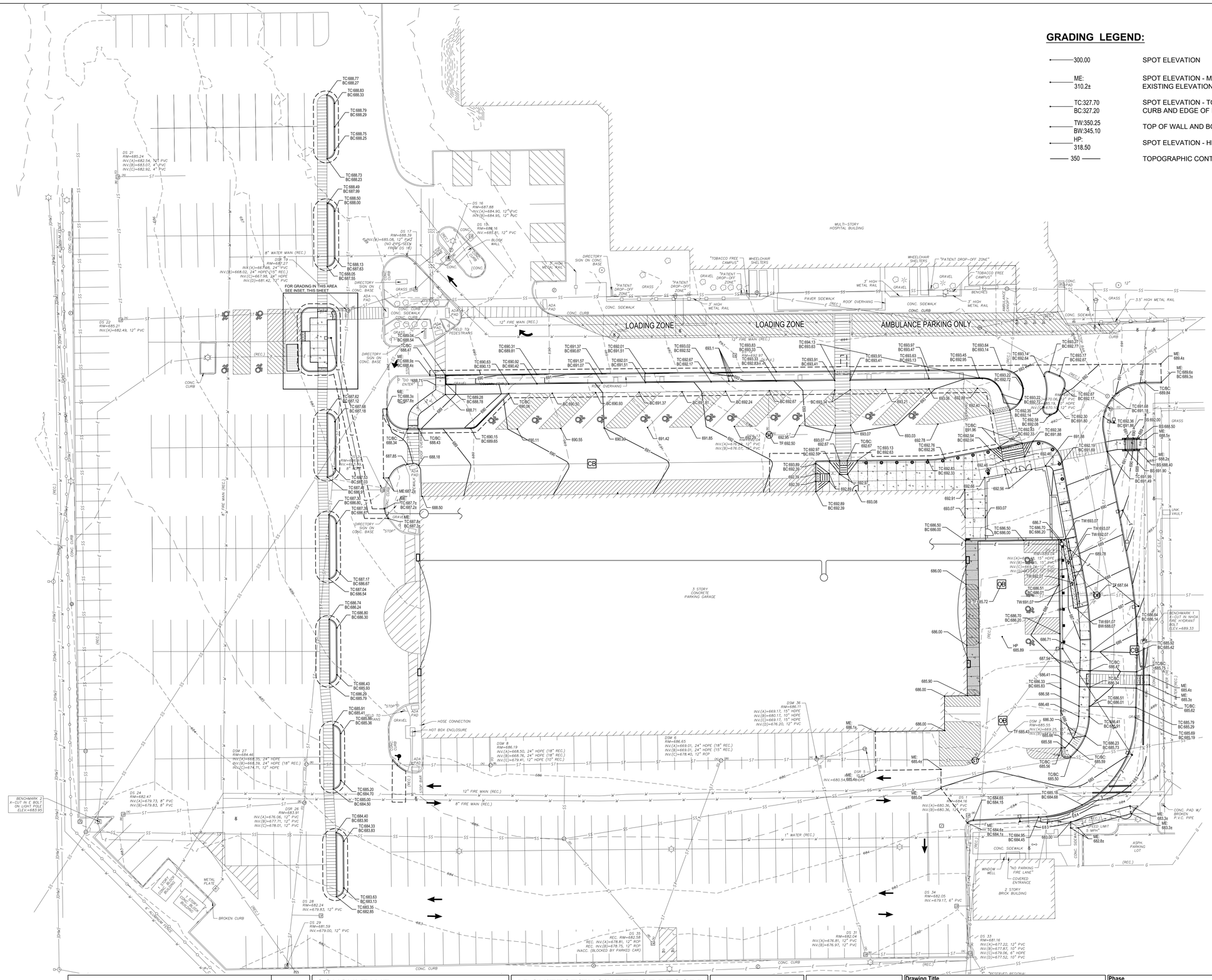

GRADING LEGEND:

300.00	SPOT ELEVATION
ME: 310.2±	SPOT ELEVATION - MATCH EXISTING ELEVATION
TC:327.70 BC:327.20	SPOT ELEVATION - TOP OF CURB AND EDGE OF PAVEMENT
TW:350.25 BW:345.10	TOP OF WALL AND BOTTOM OF WALL
HP: 318.50	SPOT ELEVATION - HIGH POINT
350	TOPOGRAPHIC CONTOUR LINE

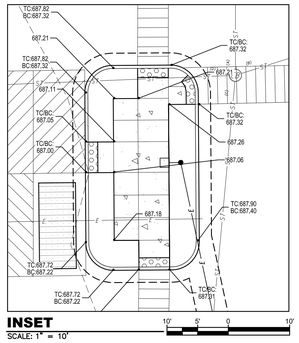

ISSUE FOR BID	08-09-2024
Revisions:	Date:

CONSULTANT

Engineering Architecture Landscape Architecture and Land Surveying, P.C.

ARCHITECT/ENGINEER OF RECORD

BANCROFT ARCHITECTS + ENGINEERS
3300 Dundee Rd.
Northbrook, IL 60062
T: 847.952.9362
www.bancroft-ae.com

STAMP Registration Expires 10.31.2026

STATE OF NEW YORK · MICHAEL D. PANICHELLI · 074751 · LICENSED PROFESSIONAL ENGINEER

Office of Construction and Facilities Management

VA U.S. Department of Veterans Affairs

Drawing Title: CIVIL-GRADING PLAN	Phase: ISSUE FOR BID	Project Title: PARKING RAMP EXPANSION	Project Number: 528-18-375
Approved: Project Director		Location: 3495 BAILEY AVE., BUFFALO, NY 14215	Building Number: 29
		Issue Date: 08-09-2024 · Checked · Drawn	Drawing Number: C150

F:\MJ1663 - Buffalo VA\MJ1663.01_C150-GRADING.dwg

6/14/2009 12:39:03 PM

VA FORM 08 - 6231

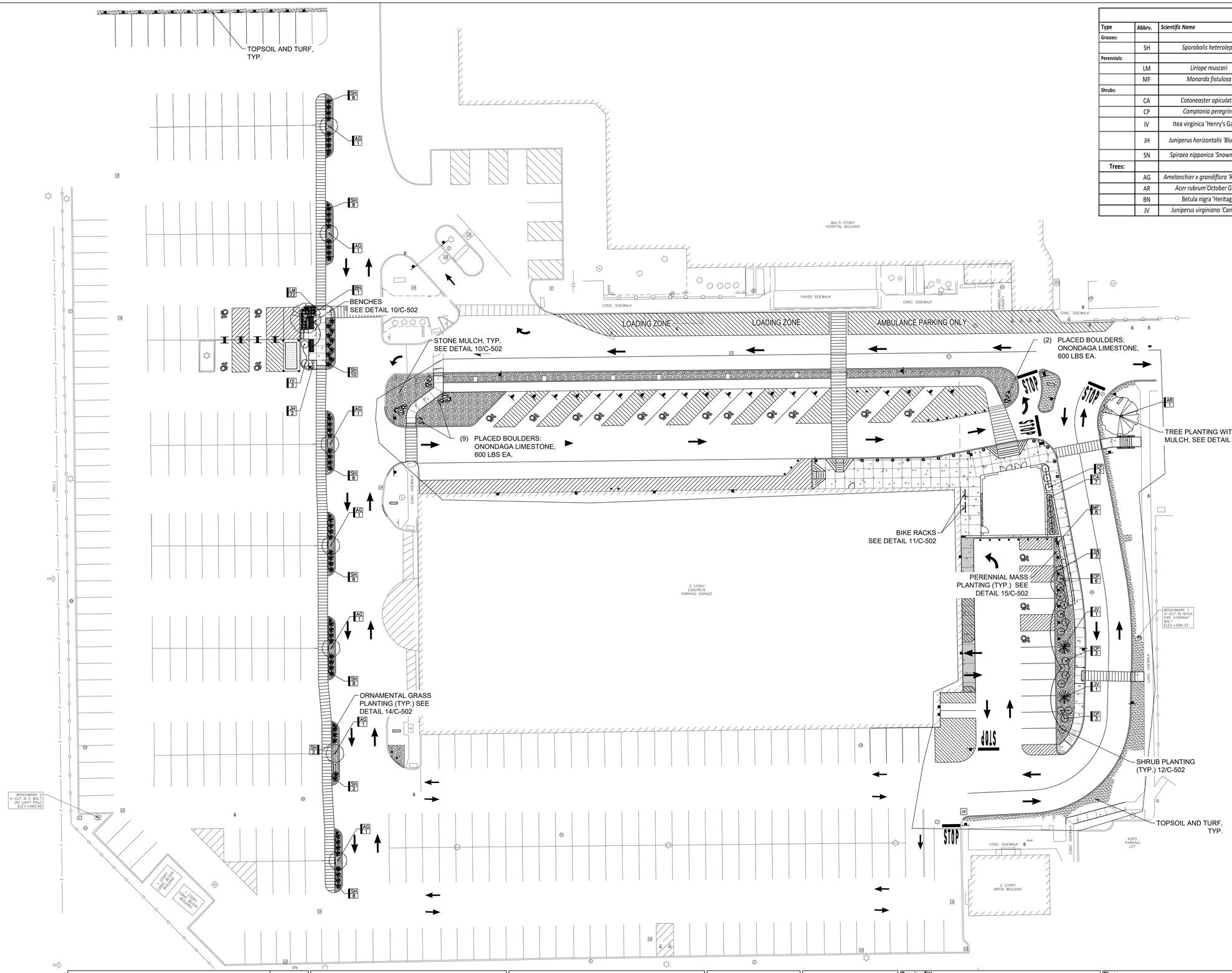

PLANT SCHEDULE						
Type	**Abbrv.**	***Scientific Name***	**Common Name**	**Size/Form**	**Spacing**	**Remarks**
Grasses:						
	SH	*Sporobolis heterolepis*	Prairie Dropseed	#1 Pot	30-36" o.c.	
Perennials:						
	LM	*Liriope muscari*	Lily Turf	#1 Pot	12-18" o.c.	Sub. L. spicata
	MF	*Monarda fistulosa*	Wild Bergamot	#1 Pot	18-24" o.c.	
Shrubs:						
	CA	*Cotoneaster apiculatus*	Cranberry Cotoneaster	#3 Pot, 1-2' Ht./Spread	3-4' o.c.	
	CP	*Comptonia peregrina*	Sweetfern	#3 Pot, 1-2' Ht.	36-48" o.c.	
	IV	Itea virginica 'Henry's Garnet'	Virginia Sweetspire	#3 Pot, 1-2' Ht./Spread	30-42" o.c.	
	JH	*Juniperus horizontalis 'Blue Chip'*	Creeping Juniper	#3 Pot	24-30" o.c.	1 Male & 1 Female
	SN	*Spiraea nipponica 'Snowmound'*	Spiraea Snowmound	#3 Pot, 1-2' Ht./Spread	36-48" o.c.	
Trees:						
	AG	*Amelanchier x grandiflora 'Robin Hill'*	Shadblow-White	B&B, 6-8' Ht., >2" Cal.	As Shown	Single Stem
	AR	*Acer rubrum'October Glory'*	October Glory Red Maple	B&B, 6-8' Ht., >2" Cal.	As Shown	
	BN	Betula nigra 'Heritage'	Heritage River Birch	B&B, 5-6' Ht.	As Shown	Multi Stem
	JV	*Juniperus virginiana 'Canaertii'*	Canaertii Red Cedar	B&B, 5-6' Ht.	As Shown	

PLANT SCHEDULE NOTES:

1. PLANT SUBSTITUTIONS MUST BE APPROVED BY AOR PRIOR TO INSTALLATION.

TREE & SHRUB PLANTING NOTES:

1. REMOVE STONES 2" AND LARGER FROM EXCAVATED PLANT PIT SOIL AND EXCAVATED PIT AREA.
2. DIG PIT DEPTH SAME AS ROOT BALL OR CONTAINER DEPTH.
3. SET ROOT BALL (REMOVE ROOT BALL FROM CONTAINERS) IN CENTER OF PIT SO TOP OF ROOT BALL WHERE ROOTS FLARE OUT (ROOT FLARE/COLLAR) IS 1-2 INCHES ABOVE FINISH GRADE & VISIBLE (NOT COVERED WITH SOIL); THE REST OF THE REMAINING TOP OF ROOT BALL SHALL BE FLUSH WITH FINISH GRADE & COVERED WITH PLANTING SOIL (TOPSOIL, SEE SPECS).
4. IF PLANT IS A CONTAINER: SLIGHTLY LOOSEN EDGES AROUND ROOT BALLS: IF PLANT IS B&B: CUT OFF ALL WIRE/ROPE ETC. AROUND ROOT BALL & DISPOSE OF PROPERLY; FOLD BACK TOP HALF TO TWO-THIRDS OF ROOT BALL LOOSENING ROOT FIBERS AT EXPOSED EDGES; KEEP REMAINING BOTTOM PORTION OF ROOT BALL IN BURLAP INTACT; APPLY ROOT ENHANCER AND FERTILIZER TO ALL B&B AND CONTAINER TREES, CLUMPS, AND SHRUBS.
5. SET PLANT STRAIGHT & PLUMB FROM ALL ANGLES; MAKE SURE ROOT BALL IS NOT DRY-MOISTEN IF NEEDED; INSTALL AS SPECIFIED; BACKFILL WITH APPROVED TOPSOIL PARTIALLY; CHECK AGAIN TO ASSURE PLANT IS STRAIGHT & PLUMB ADJUSTING AGAIN FOR APPROVAL; FINISH BACKFILL WITH APPROVED TOPSOIL; SMOOTH OUT EXCAVATION AREA AND CREATE 3"-4" HT. SAUCER FOR WATERING ZONE.

LANDSCAPING LEGEND:

- PLANT TYPE / NUMBER OF PLANTS — LANDSCAPE PLANT TAG
- TOPSOIL AND TURF
- STONE MULCH
- PERENNIAL MASS PLANTING
- SHRUB
- ORNAMENTAL GRASS
- EVERGREEN
- SMALL TREE
- TREE
- BOULDERS
- BIKE RACK
- BENCH

ISSUE FOR BID	**08-09-2024**
Revisions:	**Date:**

CONSULTANT

Engineering Architecture Landscape Architecture and Land Surveying, P.C.

ARCHITECT/ENGINEER OF RECORD

BANCROFT ARCHITECTS + ENGINEERS
3300 Dundee Rd.
Northbrook, IL 60062
T: 847.952.9362
www.bancroft-ae.com

STAMP — Registration Expires 10.31.2026

LICENSED STATE OF NEW YORK — MICHAEL D. PARTELLI — 074751 — PROFESSIONAL ENGINEER

Office of Construction and Facilities Management

VA U.S. Department of Veterans Affairs

Drawing Title LANDSCAPE PLAN	**Phase** ISSUE FOR BID	**Project Title** PARKING RAMP EXPANSION	**Project Number** 528-18-375
			Building Number 29
Approved: Project Director		**Location** 3495 BAILEY AVE., BUFFALO, NY 14215	**Drawing Number** C160
		Issue Date 08-09-2024 / **Checked** / **Drawn**	

6/14/2009 12:39:03 PM

F:\MJ\1663 - Buffalo VANU\1663.01_C160-LANDSCAPING.dwg

VA FORM 08 - 6231

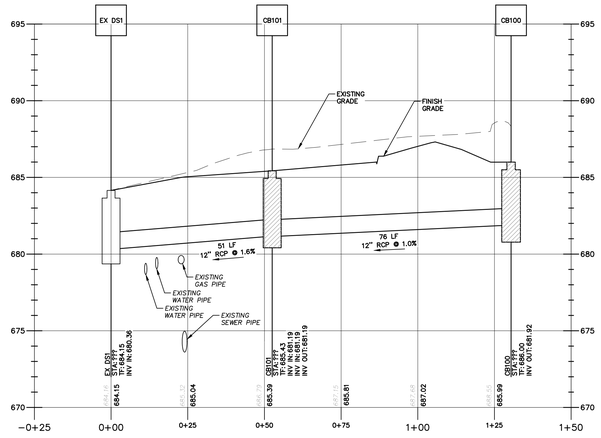

1 **CB100 - EX DS1**
SCALE(HOR): 1" = 20'
SCALE(VERT): 1" = 4'

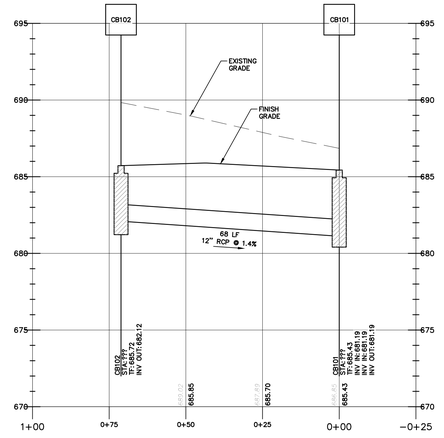

2 **CB102 - CB101**
SCALE(HOR): 1" = 20'
SCALE(VERT): 1" = 4'

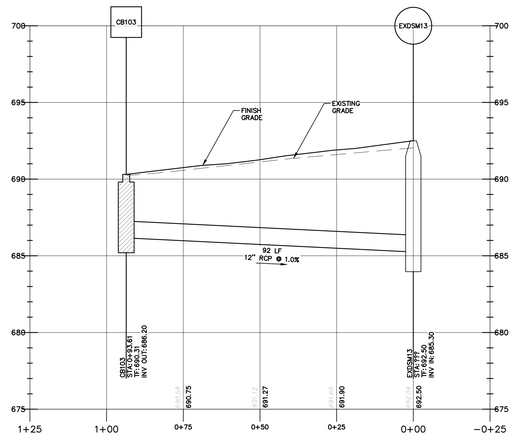

3 **CB103 - EX DSM13**
SCALE(HOR): 1" = 20'
SCALE(VERT): 1" = 4'

ISSUE FOR BID	08-09-2024
Revisions:	Date:

CONSULTANT

Engineering Architecture Landscape Architecture and Land Surveying, P.C.

ARCHITECT/ENGINEER OF RECORD

BANCROFT ARCHITECTS + ENGINEERS
3300 Dundee Rd.
Northbrook, IL 60062
T: 847.952.9362
www.bancroft-ae.com

STAMP Registration Expires 10.31.2026

STATE OF NEW YORK · MICHAEL D. PANICHELLI · 074751 · LICENSED PROFESSIONAL ENGINEER

Office of Construction and Facilities Management

VA U.S. Department of Veterans Affairs

Drawing Title: STORM SEWER PROFILES

Approved: Project Director

Phase: ISSUE FOR BID

Project Title: PARKING RAMP EXPANSION

Location: 3495 BAILEY AVE., BUFFALO, NY 14215

Issue Date: 08-09-2024

Checked:

Drawn:

Project Number: 528-18-375

Building Number: 29

Drawing Number: C200

F:\MJ1663 - Buffalo VA\MJ1663.01_C200-UTILITY PROFILES.dwg

6/14/2009 12:39:03 PM

VA FORM 08 - 6231

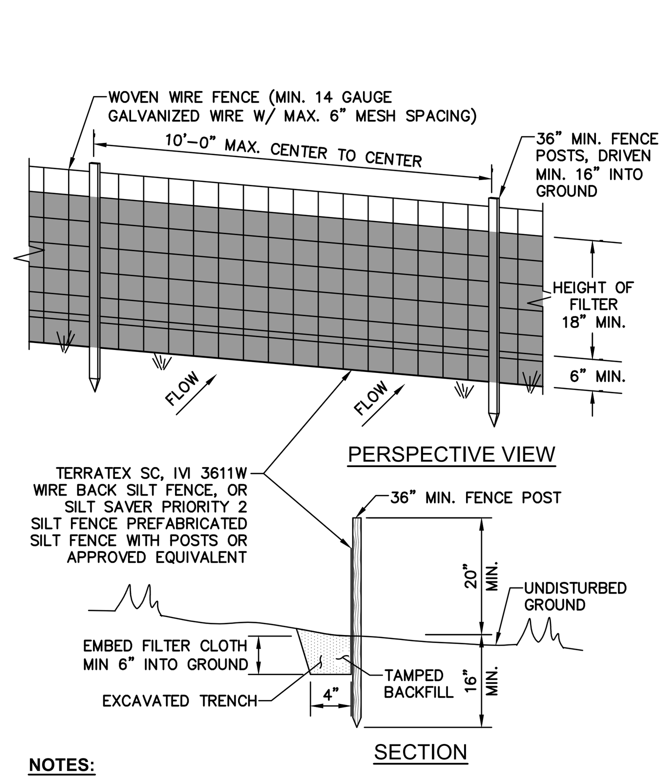

NOTES:

1. WOVEN WIRE FENCE TO BE FASTENED SECURELY TO FENCE POSTS WITH WIRE TIES OR STAPLES. POSTS SHALL BE STEEL "T" OR "U" TYPE OR HARDWOOD.
2. FILTER CLOTH TO BE FASTENED SECURELY TO WOVEN WIRE FENCE WITH TIES SPACED EVERY 24" AT TOP AND MID SECTION. FENCE SHALL BE WOVEN WIRE, 6" MAX. MESH OPENING.
3. WHEN TWO SECTIONS OF FILTER CLOTH ADJOIN EACH OTHER THEY SHALL BE OVERLAPPED BY 6" AND FOLDED.
4. MAINTENANCE SHALL BE PERFORMED AS NEEDED AND MATERIALS REMOVED WHEN "BULGES" DEVELOP IN THE SILT FENCE.
5. MAXIMUM DRAINAGE AREA FOR OVERLAND FLOW TO A SILT FENCE SHALL NOT EXCEED 1/4 ACRE PER 100 FEET OF FENCE.
6. SILT FENCE SHALL BE USED WHERE EROSION COULD OCCUR IN THE FORM OF SHEET EROSION.
7. SILT FENCE SHALL NOT BE USED WHEN A CONCENTRATION OF WATER IS FLOWING TO THE BARRIER.

1 SILT FENCE INSTALLATION

SCALE: N.T.S.

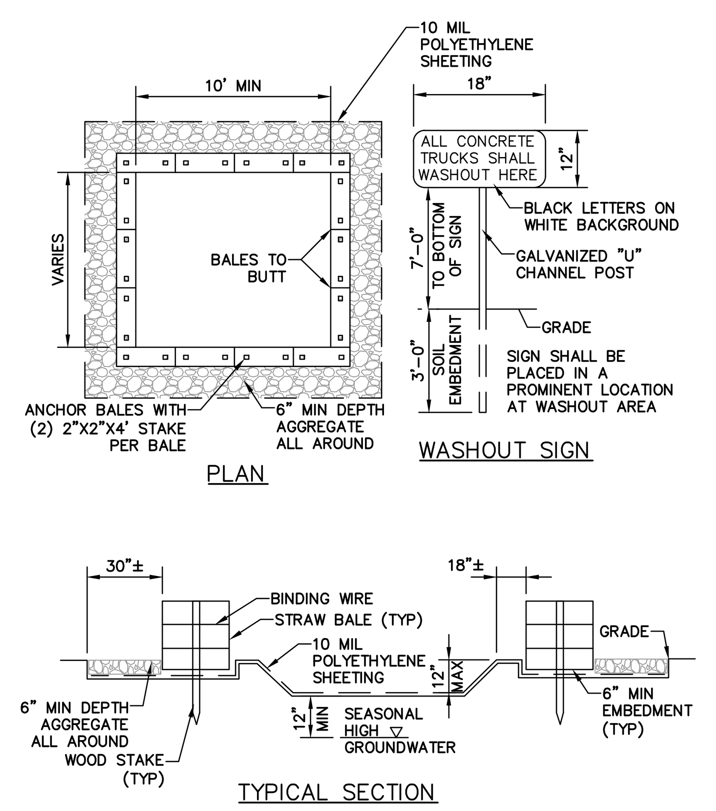

NOTES:

1. CONTAINMENT MUST BE STRUCTURALLY SOUND, LEAK FREE AND CONTAIN ALL LIQUID WASTES.
2. CONTAINMENT DEVICES MUST BE OF SUFFICIENT QUANTITY OR VOLUME TO COMPLETELY CONTAIN THE LIQUID WASTE GENERATED.
3. WASHOUT MUST BE CLEANED OR NEW FACILITIES CONSTRUCTED AND READY TO USE ONCE WASHOUT IS 75% FULL.
4. WASHOUT AREA(S) SHALL BE INSTALLED IN A LOCATION EASILY ACCESSIBLE BY CONCRETE TRUCKS.
5. ONE OR MORE AREAS MAY BE INSTALLED ON THE CONSTRUCTION SITE AND MAY BE RELOCATED AS CONSTRUCTION PROGRESSES.
6. AT LEAST WEEKLY REMOVE ACCUMULATION OF SAND AND AGGREGATE AND DISPOSE OF PROPERLY.

2 CONCRETE WASHOUT AREA

SCALE: N.T.S.

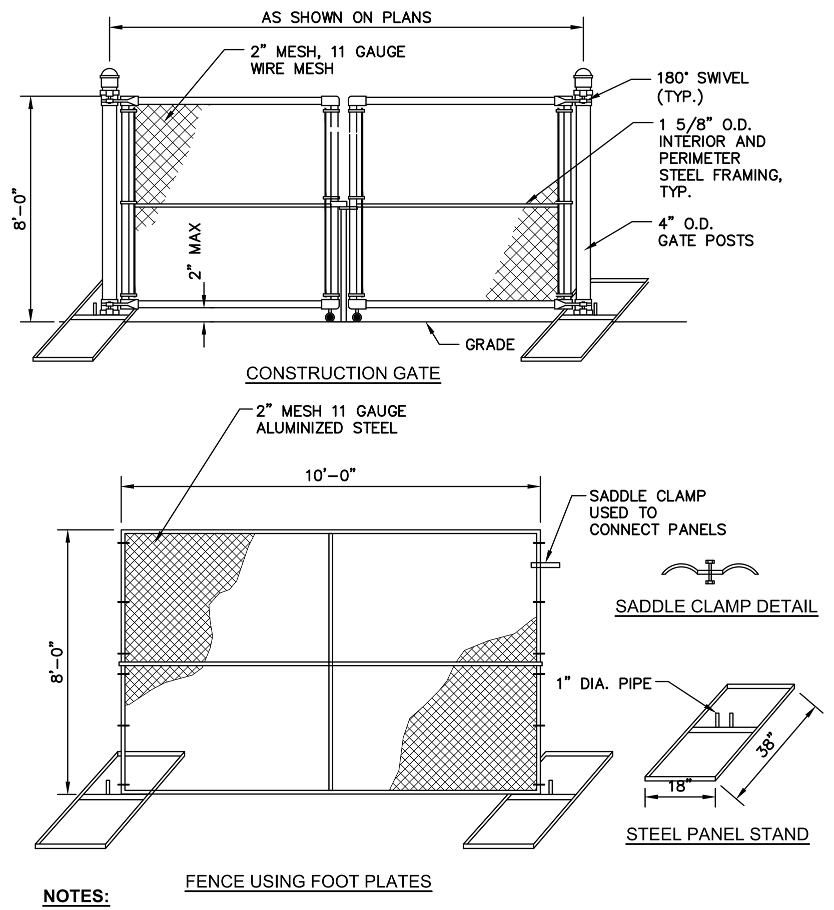

NOTES:

1. ALL COMPONENTS TO BE GALVANIZED STEEL. PROVIDE BLACK PRIVACY MESH ON TEMPORARY FENCING, WHEN DIRECTED BY THE OWNER OR THE OWNER'S REPRESENTATIVE. REFER TO 010000 "GENERAL REQUIREMENTS" FOR FURTHER INFO.
2. 3'X3' SQUARE FENCE POST PLATES TO BE PROVIDED ONLY WITH PRIOR APPROVAL FROM THE OWNER'S REPRESENTATIVE. PROVIDE PINNING FOR PLATES BASED UPON PREVAILING CONDITIONS OF THE SITE.
3. BALLASTS TO BE ADDED TO FOOT PLATES AS REQUIRED OR AS DIRECTED BY OWNER'S REPRESENTATIVE.
4. CONTRACTOR TO MAINTAIN INTEGRITY OF CONSTRUCTION FENCE FRO DURATION OF PROJECT.
5. CONTRACTOR SHALL PROVIDE CONSTRUCTION FENCING AND LOGISTICS PLAN FOR APPROVAL PRIOR TO INSTALLATION.
6. SEE ALSO SPECIFICATION 010000 "GENERAL REQUIREMENTS" FOR ADDITIONAL REQUIREMENTS ASSOCIATED WITH TEMPORARY CONSTRUCTION FENCING.

3 TEMPORARY CONSTRUCTION FENCE AND GATE

SCALE: N.T.S.

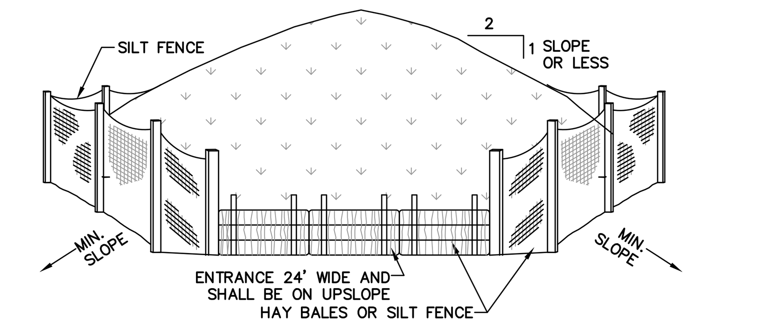

NOTES:

1. AREA CHOSEN FOR STOCKPILING OPERATIONS SHALL BE DRY AND STABLE.
2. MAXIMUM SLOPE OF STOCKPILE SHALL BE 2 HORIZ ON 1 VERT.
3. UPON COMPLETION OF SOIL STOCKPILING, EACH PILE SHALL BE SURROUNDED WITH EITHER SILT FENCING OR HAY BALES, THEN STABILIZED WITH VEGETATION OR COVERED.

4 TEMPORARY SOIL STOCKPILE

SCALE: N.T.S.

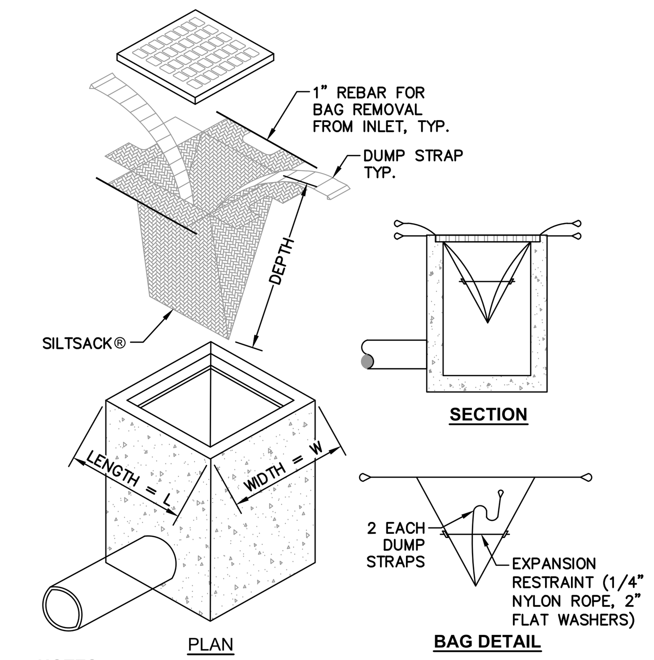

NOTES:

1. PORE OPENING SHALL BE IN BETWEEN 200 & 700 SIEVE.
2. INLET FILTER IS TYPICAL FOR ALL RECTANGULAR AND SQUARE YARD INLETS ONSITE.

5 IN-PAVEMENT INLET FILTER

SCALE: N.T.S.

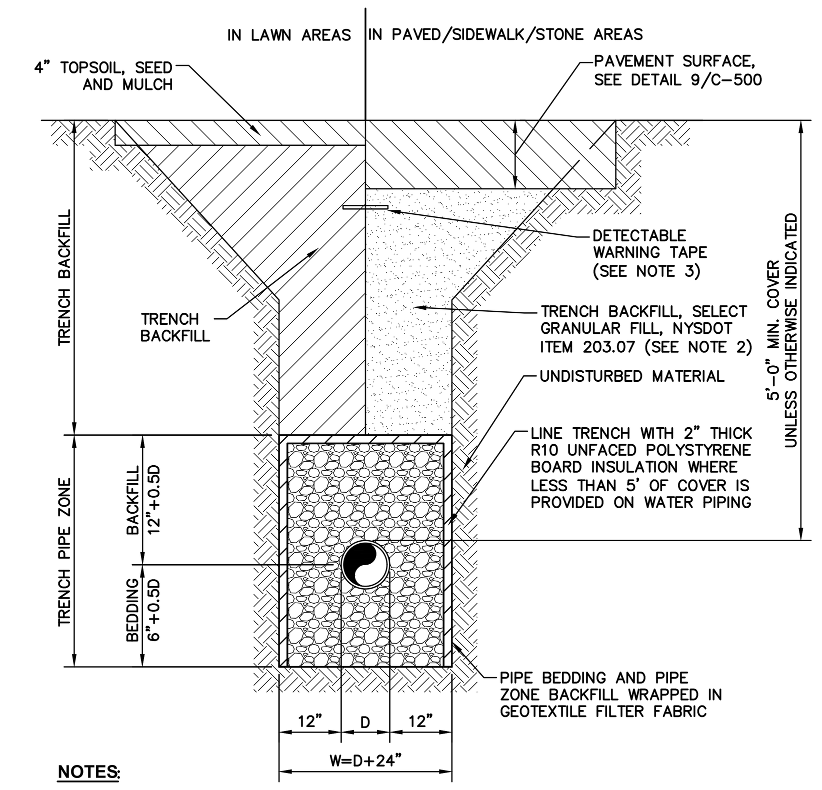

NOTES:

1. D=OUTSIDE PIPE DIAMETER.
2. ON-SITE EXCAVATED TRENCH MATERIAL MAY BE USED FOR TRENCH BACKFILL BELOW TRAFFIC AREAS IF MEETING THE NYSDOT REQUIREMENTS FOR SELECT GRANULAR FILL (ITEM 203.07)
3. PLACE DETECTABLE WARNING TAPE 6" BELOW SUBBASE IN PAVED AREAS AND 12" BELOW FINISHED GRADE IN LAWN OR LANDSCAPING AREAS. CONTRACTOR SHALL VERIFY CONDUCTIVITY OF THE METAL CORE.
4. TRENCHING SHALL BE IMPLEMENTED IN ACCORDANCE WITH O.S.H.A. STANDARDS.
5. REFER TO SPECIFICATION SECTION 31 20 00 FOR TRENCH BACKFILL, PIPE BEDDING AND PIPE ZONE BACKFILL GRADATION AND COMPACTION REQUIREMENTS.

6 WATER PIPE TRENCH AND BEDDING

SCALE: NTS

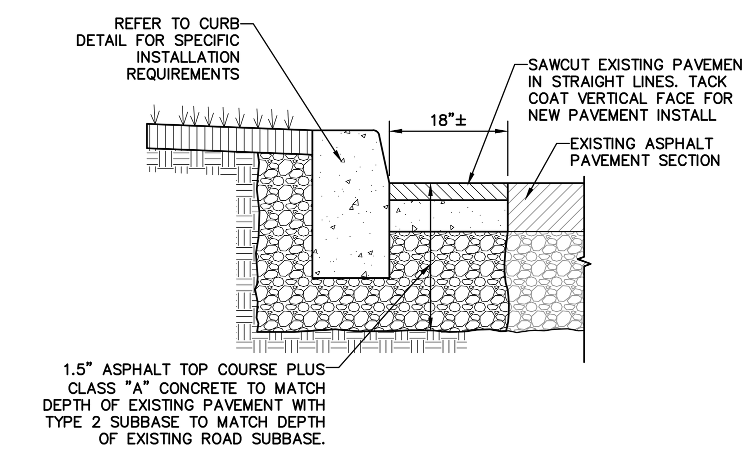

15 CURB INSTALLATION AT EXISTING PAVEMENT

SCALE: N.T.S.

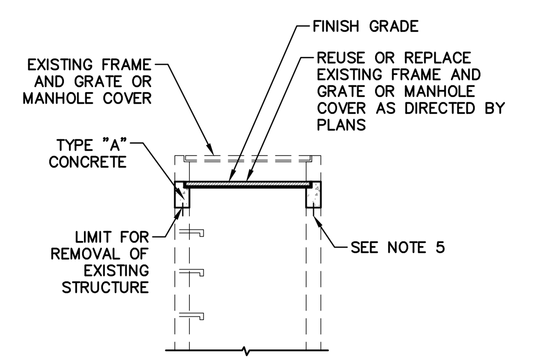

NOTES:

1. ALL CAST-IN-PLACE CONCRETE TO BE 5,000 PSI.
2. DRILL AND GROUT #4 BAR DOWELS 12" C-C WITH 6" MIN. EMBEDMENT INTO OLD SURFACES AND NEW CONCRETE. ALL EXISTING CONCRETE SURFACES THAT WILL BE IN CONTACT WITH NEW CONCRETE SHALL BE COATED WITH EPOXY POLYSULFIDE GROUT PER NYSDOT STANDARD SPECIFICATION 721.03.
3. PAYMENT FOR EXCAVATION, PARTIAL STRUCTURE EXCAVATION, CONCRETE GROUT, AND UNCOATED REINFORCING BARS REQUIRED FOR THE ALTERATION OF THE EXISTING STRUCTURES SHALL BE INCLUDED IN THE APPROPRIATE ALTERATION ITEM FOR EACH STRUCTURE.
4. ALL EXISTING MORTAR AND MASONRY ADJUSTMENTS SHALL BE REMOVED PRIOR TO INSTALL CONCRETE ADJUSTMENT RINGS.
5. DEPTH OF THE ALTERATION NOT TO EXCEED 12".
6. IF A DRAINAGE STRUCTURE IS SEVERELY DETERIORATED, THE ENTIRE STRUCTURE MAY REQUIRE REPLACEMENT WITH A PRECAST CONCRETE UNIT, ONLY AS APPROVED BY THE ENGINEER.

8 ALTER EXISTING DRAINAGE STRUCTURE

SCALE: N.T.S.

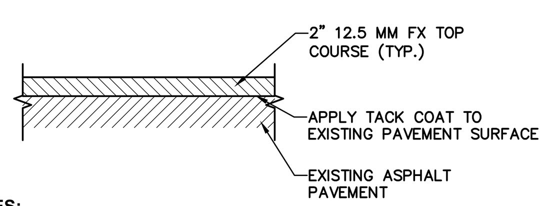

NOTES:

1. MATERIALS PREPARE EXISTING ASPHALT PAVEMENT IN ACCORDANCE WITH N.Y.S D.O.T. SECTION 633 "CONDITIONING EXISTING PAVEMENT"
2. MILL EXISTING ASPHALT CONCRETE TO DESIRED DEPTH, CLEAN SURFACE TO BE REPAVED. APPLY TACK COAT AND TOP COURSE.

10 ASPHALT PAVEMENT MILLING AND RESURFACING

SCALE: N.T.S.

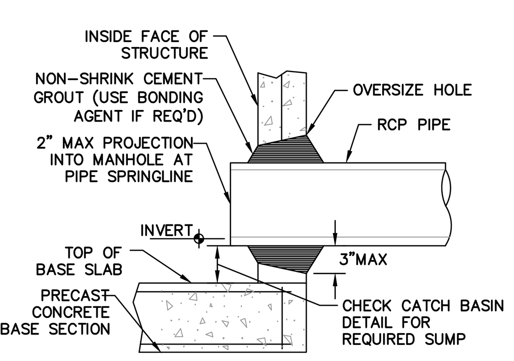

11 PIPE CONNECTION TO DRAINAGE STRUCTURE CEMENT GROUT SEAL JOINT

SCALE: N.T.S.

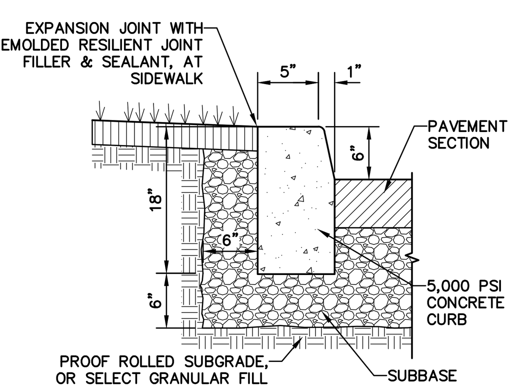

NOTES:

1. CONSTRUCTION JOINTS 10' O.C. MAX AND EXPANSION JOINTS 100' O.C. MAX.
2. CONCRETE CURB SHALL BE INSTALLED IN ACCORDANCE WITH SPECIFICATION SECTION 32 05 23.
3. PRECAST CONCRETE CURB MAY BE SUBSTITUTED, WHEN ALTERNATE CONSTRUCTION DETAILS ARE SUBMITTED BY THE CONTRACTOR AND APPROVED BY THE ENGINEER.

13 CONCRETE CURB

SCALE: N.T.S.

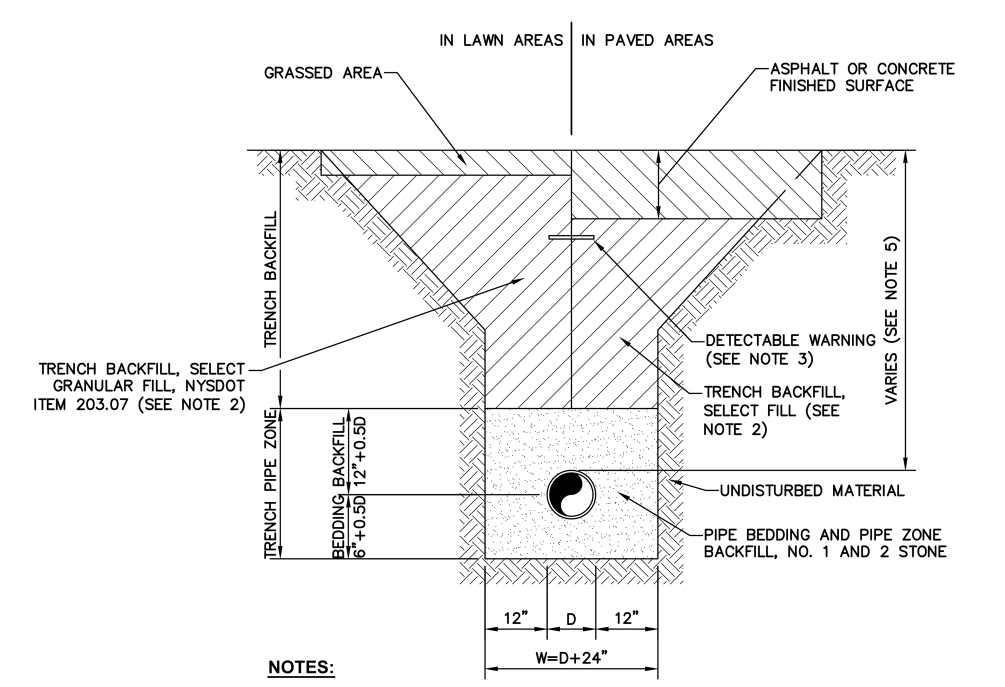

NOTES:

1. D=OUTSIDE PIPE DIAMETER.
2. ON-SITE EXCAVATED TRENCH MATERIAL MAY BE USED FOR TRENCH BACKFILL BELOW TRAFFIC AREAS IF MEETING THE NYSDOT REQUIREMENTS FOR SELECT GRANULAR FILL (ITEM 203.07)
3. PLACE DETECTABLE WARNING TAPE 6" BELOW SUBBASE IN PAVED AREAS AND 12" BELOW FINISHED GRADE IN LAWN OR LANDSCAPING AREAS.
4. TRENCHING SHALL BE IMPLEMENTED IN ACCORDANCE WITH O.S.H.A. STANDARDS.
5. THE MINIMUM DEPTH TO TOP OF UTILITY PIPE SHALL BE:

   POTABLE WATER: 5'-0"
   SANITARY SEWER: 4'-0"
   STORM SEWER: 2'-0"
6. REFER TO SPECIFICATION SECTION 31 20 00 FOR TRENCH BACKFILL, PIPE BEDDING AND PIPE ZONE BACKFILL GRADATION AND COMPACTION REQUIREMENTS.

16 STORM SEWER PIPE TRENCH AND BEDDING

SCALE: N.T.S.

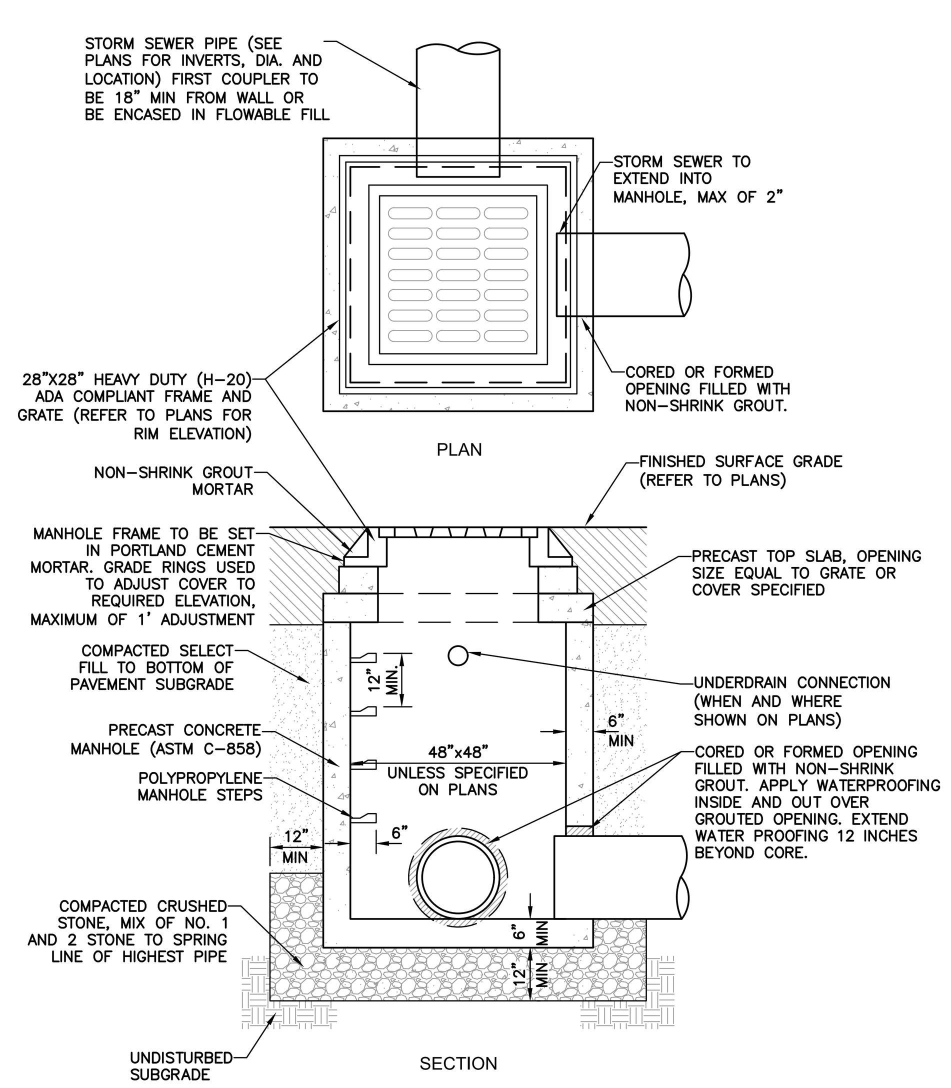

7 STORM CATCH BASIN (SQUARE) - PRECAST

SCALE: N.T.S.

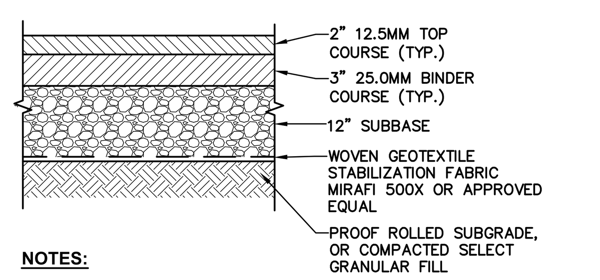

NOTES:

1. WHERE IT IS NECESSARY TO PLACE FILL FOR PURPOSES OF BRINGING THE SUBGRADE ELEVATION UP TO A SPECIFIED GRADE, THE FILL MATERIAL PLACED SHALL BE SELECT GRANULAR FILL IN CONFORMANCE WITH SPECIFICATION 31 20 00.
2. REFER TO SPECIFICATION SECTION 32 12 16 FOR PAVEMENT MATERIAL REQUIREMENTS.
3. APPLY TACK COAT BETWEEN ALL HMA PAVEMENT LIFTS PRIOR TO PLACING ASPHALT MIXTURE REGARDLESS OF TIME PERIOD BETWEEN LIFTS.

9 ASPHALT PAVEMENT SECTION

SCALE: N.T.S.

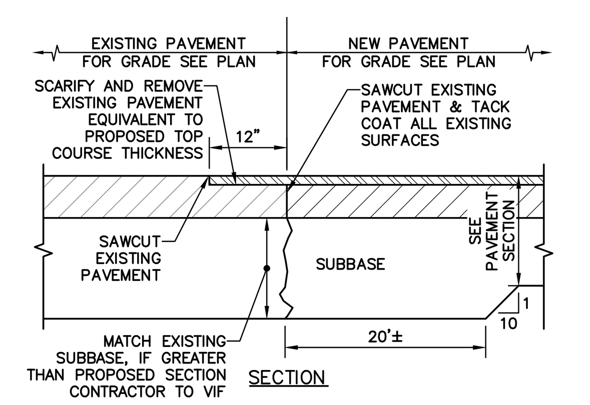

12 PAVEMENT TRANSITION

SCALE: N.T.S.

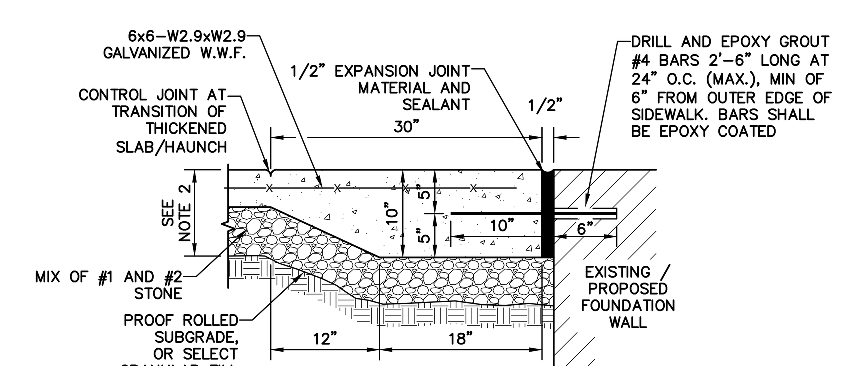

NOTE:

1. THICKENED (HAUNCH) AND ADDITIONALLY REINFORCED CONCRETE SIDEWALK ENDS ARE REQUIRED AT ALL EXISTING/PROPOSED BUILDING ENTRANCES.
2. SEE CONCRETE SIDEWALK DETAIL FOR ADDITIONAL DETAILS AND NOTES.
3. JOINTS BETWEEN SIDEWALKS, CURB RAMPS, TURNING SPACES AND ROADWAYS SHALL BE FLUSH AND FREE FROM ABRUPT VERTICAL CHANGES GREATER THAN ¼". VERTICAL SURFACE DISCONTINUITIES BETWEEN 1/4" AND 1/2" SHALL BE BEVELED WITH A SLOPE NOT STEEPER THAN 1:2. THE BEVEL SHALL BE APPLIED ACROSS THE ENTIRE JOINT.

14 CONCRETE SIDEWALK AT BUILDING

SCALE: N.T.S.

ISSUE FOR BID	08-09-2024
Revisions:	Date:

CONSULTANT

MJ Engineering Architecture Landscape Architecture and Land Surveying, P.C.

ARCHITECT/ENGINEER OF RECORD

BANCROFT ARCHITECTS + ENGINEERS
3300 Dundee Rd.
Northbrook, IL 60062
T: 847.952.9362
www.bancroft-ae.com

STAMP
Registration Expires 10.31.2026
STATE OF NEW YORK · MICHAEL D. PANICHELLI · 074751 · LICENSED PROFESSIONAL ENGINEER

Office of Construction and Facilities Management
VA U.S. Department of Veterans Affairs

Drawing Title	Phase	Project Title	Project Number
CIVIL-SITE DETAILS	ISSUE FOR BID	PARKING RAMP EXPANSION	528-18-375
			Building Number: 29
Approved: Project Director		Location: 3495 BAILEY AVE., BUFFALO, NY 14215	Drawing Number: C500
		Issue Date: 08-09-2024 / Checked / Drawn	

F:\MJ1663 - Buffalo VA\MJ1663.01_C500-DETAILS.dwg
6/14/2009 12:39:03 PM

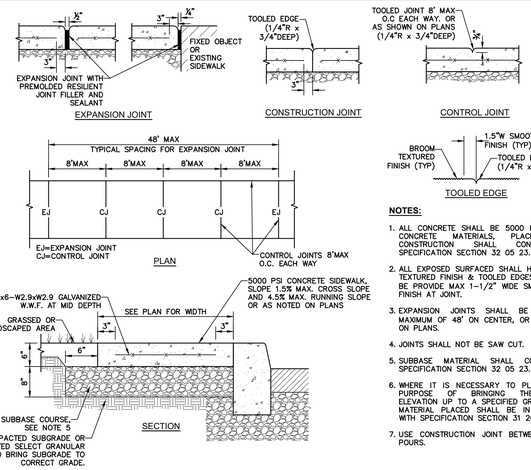

NOTES:

1. ALL CONCRETE SHALL BE 5000 PSI CONCRETE. CONCRETE MATERIALS, PLACEMENT, AND CONSTRUCTION SHALL CONFORM WITH SPECIFICATION SECTION 32 05 23.
2. ALL EXPOSED SURFACED SHALL HAVE A BROOM TEXTURED FINISH & TOOLED EDGES. TOOL SHALL BE PROVIDE MAX 1–1/2" WIDE SMOOTH TROWEL FINISH AT JOINT.
3. EXPANSION JOINTS SHALL BE LOCATED A MAXIMUM OF 48' ON CENTER, OR AS INDICATED ON PLANS.
4. JOINTS SHALL NOT BE SAW CUT.
5. SUBBASE MATERIAL SHALL CONFORM WITH SPECIFICATION SECTION 32 05 23.
6. WHERE IT IS NECESSARY TO PLACE FILL FOR PURPOSE OF BRINGING THE SUBGRADE ELEVATION UP TO A SPECIFIED GRADE, THE FILL MATERIAL PLACED SHALL BE IN ACCORDANCE WITH SPECIFICATION SECTION 31 20 00.
7. USE CONSTRUCTION JOINT BETWEEN CONCRETE POURS.

1 CONCRETE PAVEMENT
SCALE: N.T.S.

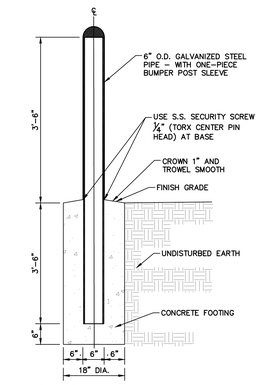

NOTES:

1. BUMPER SLEEVE PER SPECIFICATION SECTION 05 50 00.
   a. BUMPER SLEEVE COLOR TO BE SELECTED BY THE OWNER
2. ALL CONCRETE SHALL HAVE A MINIMUM COMPRESSIVE STRENGTH OF 3,000 PSI @ 28 DAYS.
3. ALL CONCRETE SHALL HAVE A SLUMP OF NO GREATER THAN 4" (WITH A TOLERANCE OF 1").
4. ALL CONCRETE SHALL HAVE A 5% ENTRAINED AIR (WITH A TOLERANCES OF 1%) CONFORMING WITH ASTM C260.

2 6" BOLLARD
SCALE: N.T.S.

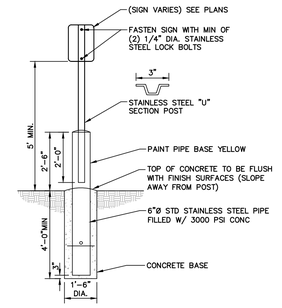

3 TUBULAR POST SIGN MOUNTING
SCALE: N.T.S.

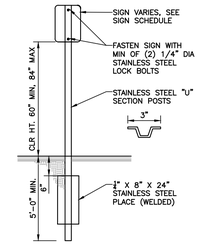

4 SINGLE POST SIGN MOUNTING DETAIL
SCALE: N.T.S.

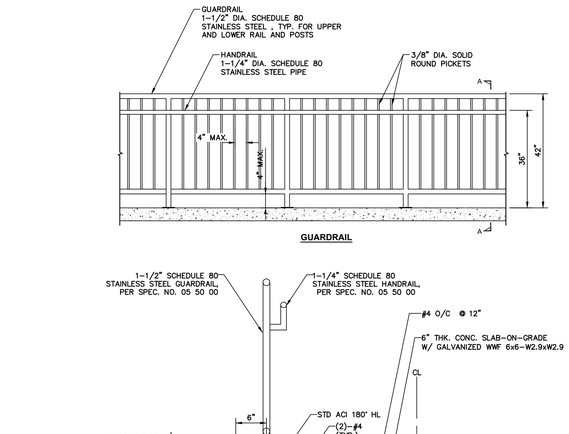

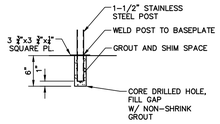

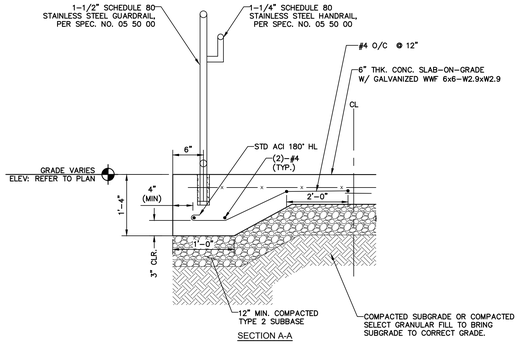

NOTES:

1. ALL CONCRETE SHALL BE 5000 PSI TYPE "A" CONCRETE. CONCRETE MATERIALS, PLACEMENT, AND CONSTRUCTION SHALL CONFORM WITH SPECIFICATION SECTION 32 05 23.
2. ALL EXPOSED SURFACED SHALL HAVE A BROOM TEXTURED FINISH & TOOLED EDGES. TOOL SHALL BE PROVIDE MAX 1–1/2" WIDE SMOOTH TROWEL FINISH AT JOINT.
3. EXPANSION JOINTS SHALL BE LOCATED A MAXIMUM OF 48' ON CENTER, OR AS INDICATED ON PLANS.
4. JOINTS SHALL NOT BE SAW CUT.
5. SUBBASE MATERIAL SHALL CONFORM WITH SPECIFICATION SECTION 31 20 00.
6. WHERE IT IS NECESSARY TO PLACE FILL FOR PURPOSE OF BRINGING THE SUBGRADE ELEVATION UP TO A SPECIFIED GRADE, THE FILL MATERIAL PLACED SHALL BE IN ACCORDANCE WITH SPECIFICATION SECTION 31 20 00.
7. USE CONSTRUCTION JOINT BETWEEN CONCRETE POURS.
8. ALL REBAR REINFORCEMENT SHALL BE EPOXIED.

5 CONCRETE SIDEWALK WITH GUARDRAIL
SCALE: N.T.S.

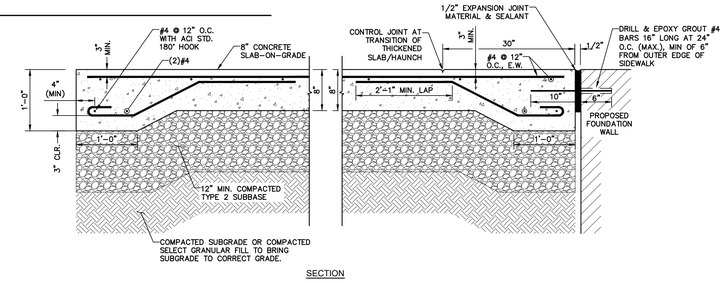

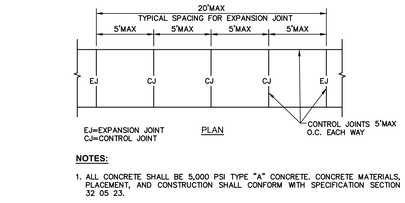

NOTES:

1. ALL CONCRETE SHALL BE 5,000 PSI TYPE "A" CONCRETE. CONCRETE MATERIALS, PLACEMENT, AND CONSTRUCTION SHALL CONFORM WITH SPECIFICATION SECTION 32 05 23.
2. ALL EXPOSED SURFACED SHALL HAVE A BROOM TEXTURED FINISH & TOOLED EDGES. TOOL SHALL BE PROVIDE MAX 1–1/2" WIDE SMOOTH TROWEL FINISH AT JOINT.
3. EXPANSION JOINTS SHALL BE LOCATED A MAXIMUM OF 20' ON CENTER, OR AS INDICATED ON PLANS.
4. JOINTS SHALL NOT BE SAW CUT.
5. SUBBASE MATERIAL SHALL CONFORM WITH SPECIFICATION SECTION 31 20 00.
6. WHERE IT IS NECESSARY TO PLACE FILL FOR PURPOSE OF BRINGING THE SUBGRADE ELEVATION UP TO A SPECIFIED GRADE, THE FILL MATERIAL PLACED SHALL BE IN ACCORDANCE WITH SPECIFICATION SECTION 31 20 00.
7. ALL W.W.F. SHALL BE GALVANIZED AND ALL REBAR/DOWELS EPOXY COATED.

6 HEAVY DUTY CONCRETE PAVEMENT
SCALE: N.T.S.

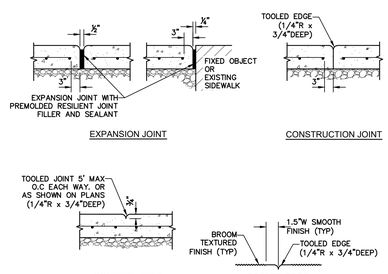

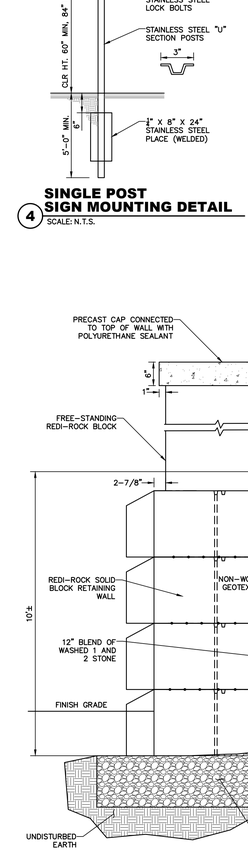

NOTES:

1. BASIS OF DESIGN: REDI–ROCK SOLID BLOCK MODULAR RETAINING WALL SYSTEM.
2. SEGMENTAL RETAINING WALL (SRW) AND COMPONENTS SHALL BE DELEGATED DESIGN. ALL CALCULATIONS AND DRAWINGS SHALL BE PREPARED AND SEALED BY A PROFESSIONAL CIVIL ENGINEER (P.E.) – (WALL DESIGN ENGINEER) EXPERIENCED IN SRW DESIGN AND LICENSED IN THE STATE OF NEW YORK.

7 SEGMENTED CONCRETE RETAINING WALL SECTION
SCALE: N.T.S.

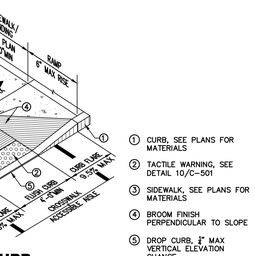

8 CURB RAMP - DROP CURB
SCALE:

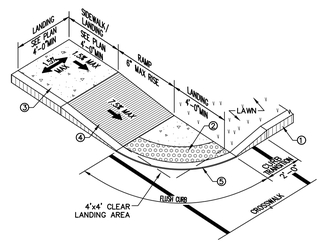

9 CURB RAMP - DROP CURB
SCALE:

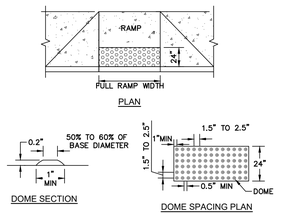

NOTES:

1. CAST IRON TACTILE WARNING STRIP SHALL BE ADA COMPLIANT INCLUDING THAT IT SHALL CONTRAST VISUALLY WITH ADJOINING SURFACES.

10 TACTILE WARNINGS FOR RAMPS
SCALE:

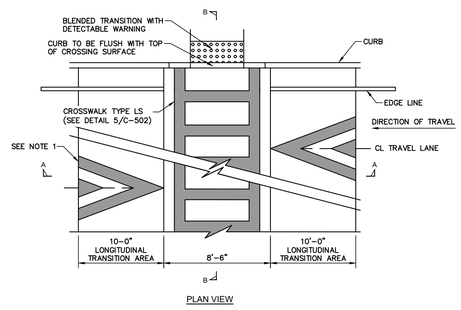

NOTES:

1. SIGNING AND PAVEMENT MARKINGS SHALL BE IN ACCORDANCE WITH THE MUTCD.
2. FOR CONTRAST OR AESTHETICS, A TYPE "LS" CROSSWALK PAVEMENT MARKING SHALL BE USED WITH A COLORED OR TEXTURED CROSSWALK SURFACE.

11 RAISED ASPHALT CROSSWALK
SCALE: N.T.S.

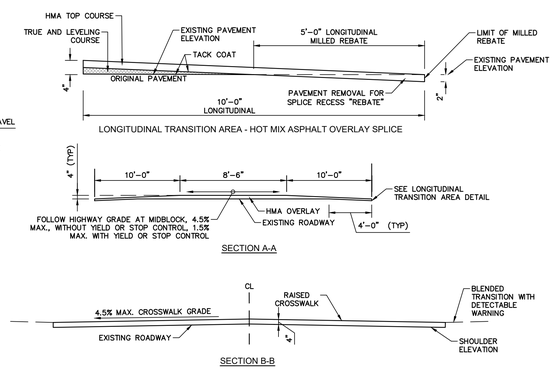

ISSUE FOR BID	08-09-2024
Revisions:	Date:

CONSULTANT

Engineering Architecture Landscape Architecture and Land Surveying, P.C.

ARCHITECT/ENGINEER OF RECORD

BANCROFT ARCHITECTS + ENGINEERS
3300 Dundee Rd.
Northbrook, IL 60062
T: 847.952.9362
www.bancroft-ae.com

STAMP
Registration Expires 10.31.2026
LICENSED STATE OF NEW YORK MICHAEL D. PANTELLI PROFESSIONAL ENGINEER 074751

Office of Construction and Facilities Management

VA U.S. Department of Veterans Affairs

Drawing Title: CIVIL-SITE DETAILS	Phase: ISSUE FOR BID	Project Title: PARKING RAMP EXPANSION	Project Number: 528-18-375
			Building Number: 29
Approved: Project Director		Location: 3495 BAILEY AVE., BUFFALO, NY 14215	Drawing Number: C501
		Issue Date: 08-09-2024 / Checked / Drawn	

F:\MJ\1663 - Buffalo VAMC\1663.01_CSD\C-DETAILS.dwg
6/14/2009 12:39:03 PM
VA FORM 08 - 6231

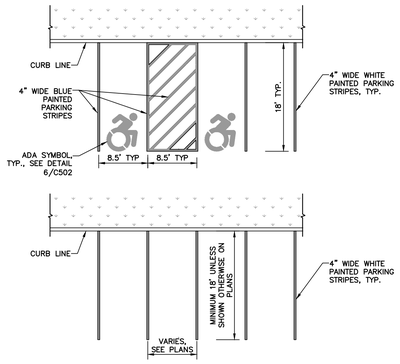

NOTES:

1. REFER TO SPECIFICATION SECTION 32 17 23 FOR PAVEMENT MARKING REQUIREMENTS.

1 90° PARKING STALL STRIPING
SCALE: N.T.S.

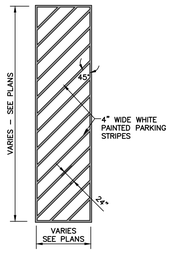

NOTES:

1. REFER TO SPECIFICATION SECTION 32 17 23 FOR PAVEMENT MARKING REQUIREMENTS.

2 NO PARKING LOADING ZONE STRIPING
SCALE: N.T.S.

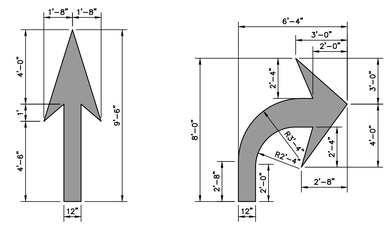

NOTES:

1. REFER TO SPECIFICATION SECTION 32 17 23 FOR PAVEMENT MARKING REQUIREMENTS.

3 DIRECTIONAL ARROW STRIPING
SCALE: N.T.S.

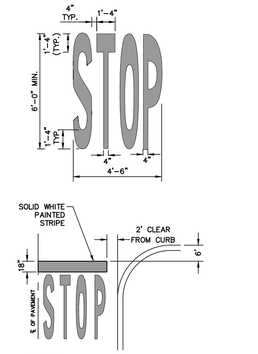

NOTES:

1. REFER TO SPECIFICATION SECTION 32 17 23 FOR PAVEMENT MARKING REQUIREMENTS.

4 STOP LINE/LETTERING
SCALE: N.T.S.

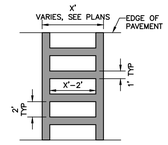

NOTES:

1. REFER TO SPECIFICATION SECTION 32 17 23 FOR PAVEMENT MARKING REQUIREMENTS.

5 CROSSWALK
SCALE: N.T.S.

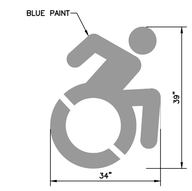

NOTES:

1. REFER TO SPECIFICATION SECTION 32 17 23 FOR PAVEMENT MARKING REQUIREMENTS.

6 ADA SYMBOL MARKINGS
SCALE: N.T.S.

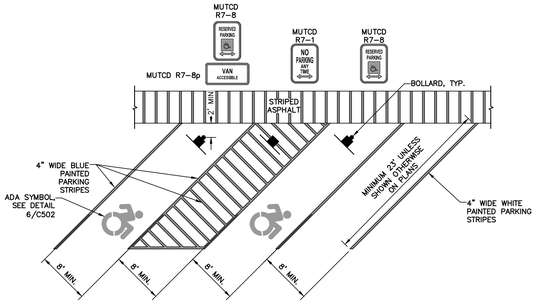

NOTES:

1. ALL DIMENSIONS SHALL BE IN ACCORDANCE WITH ICC A117.1.
2. SLOPES OF PAVEMENT SURFACE IN THE ACCESSIBLE SPACE AND ACCESSIBLE AISLE SHALL NOT EXCEED 1.5% IN ANY DIRECTION.
3. SEE MATERIALS PLAN FOR ACTUAL LOCATION OF SIGNAGE.
4. REFER TO SPECIFICATION SECTION 32 17 23 FOR PAVEMENT MARKING REQUIREMENTS.

7 45° PARKING STALL STRIPING
SCALE:

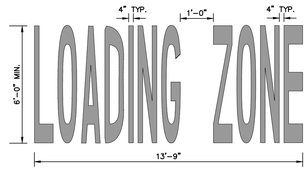

NOTES:

1. REFER TO SPECIFICATION SECTION 32 17 23 FOR PAVEMENT MARKING REQUIREMENTS.

8 LOADING ZONE MARKINGS
SCALE: N.T.S.

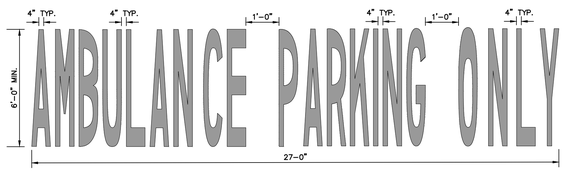

NOTES:

1. REFER TO SPECIFICATION SECTION 32 17 23 FOR PAVEMENT MARKING REQUIREMENTS.

9 AMBULANCE PARKING MARKINGS
SCALE: N.T.S.

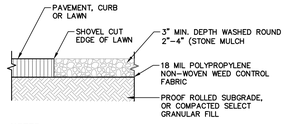

NOTES:

1. RIVER STONE TO BE INSTALLED CONTIGUOUSLY.
2. WEED CONTROL FABRIC TO BE INSTALLED OVER ENTIRE PLANTING BED AND STAKED AT THE EDGES.
3. FABRIC TO HAVE A MINIMUM 14-INCH OVERLAP AT JOINS.

10 STONE MULCH
SCALE: N.T.S.

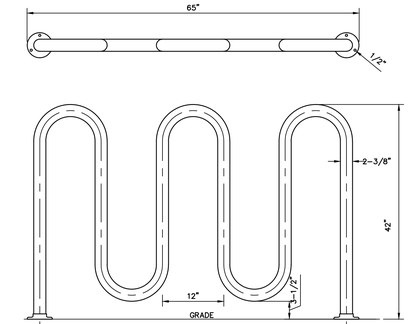

NOTES:

1. BASIS OF DESIGN: KEYSTONE RIDGE "SONANCE" MODEL SNOS-7 OR APPROVED EQUAL.
2. INSTALL ACCORDING TO MANUFACTURER'S INSTRUCTIONS.
3. COLOR TO BE COORDINATED WITH AOR,

11 BIKE RACK
SCALE: NTS

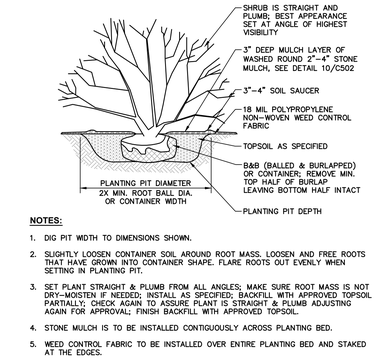

NOTES:

1. DIG PIT WIDTH TO DIMENSIONS SHOWN.
2. SLIGHTLY LOOSEN CONTAINER SOIL AROUND ROOT MASS. LOOSEN AND FREE ROOTS THAT HAVE GROWN INTO CONTAINER SHAPE. FLARE ROOTS OUT EVENLY WHEN SETTING IN PLANTING PIT.
3. SET PLANT STRAIGHT & PLUMB FROM ALL ANGLES; MAKE SURE ROOT MASS IS NOT DRY-MOISTEN IF NEEDED; INSTALL AS SPECIFIED; BACKFILL WITH APPROVED TOPSOIL PARTIALLY; CHECK AGAIN TO ASSURE PLANT IS STRAIGHT & PLUMB ADJUSTING AGAIN FOR APPROVAL; FINISH BACKFILL WITH APPROVED TOPSOIL.
4. STONE MULCH IS TO BE INSTALLED CONTIGUOUSLY ACROSS PLANTING BED.
5. WEED CONTROL FABRIC TO BE INSTALLED OVER ENTIRE PLANTING BED AND STAKED AT THE EDGES.
6. WEED CONTROL FABRIC TO HAVE HOLES WHERE PLANT IS INSTALLED WITH MINIMUM GAPS.
7. FABRIC TO HAVE A MINIMUM 14-INCH OVERLAP AT JOINS.

12 SHRUB PLANTING
SCALE: N.T.S.

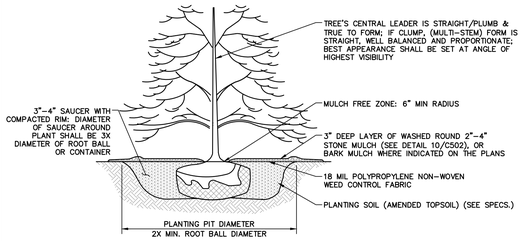

NOTES:

1. DIG PIT WIDTH TO DIMENSIONS SHOWN.
2. SLIGHTLY LOOSEN CONTAINER SOIL AROUND ROOT MASS. LOOSEN AND FREE ROOTS THAT HAVE GROWN INTO CONTAINER SHAPE. FLARE ROOTS OUT EVENLY WHEN SETTING IN PLANTING PIT.
3. SET PLANT STRAIGHT & PLUMB FROM ALL ANGLES; MAKE SURE ROOT MASS IS NOT DRY-MOISTEN IF NEEDED; INSTALL AS SPECIFIED; BACKFILL WITH APPROVED TOPSOIL PARTIALLY; CHECK AGAIN TO ASSURE PLANT IS STRAIGHT & PLUMB ADJUSTING AGAIN FOR APPROVAL; FINISH BACKFILL WITH APPROVED TOPSOIL.
4. INDIVIDUAL TREES TO HAVE 8-FOOT DIAMETER STONE MULCH RING AROUND BASE.
5. WEED CONTROL FABRIC TO BE INSTALLED BELOW STONE MULCH RING AND STAKED AT THE EDGES.
6. FABRIC TO HAVE A MINIMUM 14-INCH OVERLAP AT JOINS.

13 TREE PLANTING
SCALE: N.T.S.

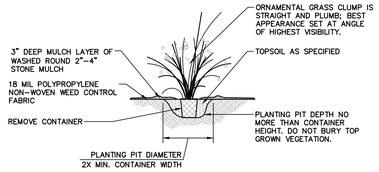

NOTES:

1. DIG PIT WIDTH TO DIMENSIONS SHOWN.
2. SLIGHTLY LOOSEN CONTAINER SOIL AROUND ROOT MASS. LOOSEN AND FREE ROOTS THAT HAVE GROWN INTO CONTAINER SHAPE. FLARE ROOTS OUT EVENLY WHEN SETTING IN PLANTING PIT.
3. SET PLANT STRAIGHT & PLUMB FROM ALL ANGLES; MAKE SURE ROOT MASS IS NOT DRY-MOISTEN IF NEEDED; INSTALL AS SPECIFIED; BACKFILL WITH APPROVED TOPSOIL PARTIALLY; CHECK AGAIN TO ASSURE PLANT IS STRAIGHT & PLUMB ADJUSTING AGAIN FOR APPROVAL; FINISH BACKFILL WITH APPROVED TOPSOIL.
4. STONE MULCH IS TO BE INSTALLED CONTIGUOUSLY ACROSS PLANTING BED.
5. WEED CONTROL FABRIC TO BE INSTALLED OVER ENTIRE PLANTING BED AND STAKED AT THE EDGES.
6. WEED CONTROL FABRIC TO HAVE HOLES WHERE PLANT IS INSTALLED WITH MINIMUM GAPS.
7. FABRIC TO HAVE A MINIMUM 14-INCH OVERLAP AT JOINS.

14 ORNAMENTAL GRASS PLANTING
SCALE: N.T.S.

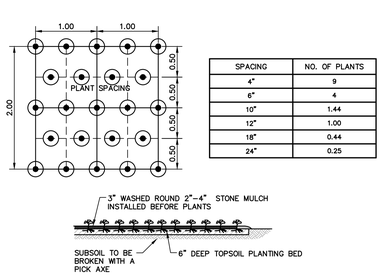

SPACING	NO. OF PLANTS
4"	9
6"	4
10"	1.44
12"	1.00
18"	0.44
24"	0.25

NOTES:

1. PERENNIALS SHOULD BE POT OR CONTAINER GROWN.
2. SEE LANDSCAPE PLANT LIST FOR RECOMMENDED PLANT SPACING FOR EACH PERENNIAL TYPE.
3. PLANTS SHALL BE STAGGERED BETWEEN EACH ROW. SEE DIAGRAM ABOVE.

15 PERENNIAL MASS PLANTING
SCALE: N.T.S.

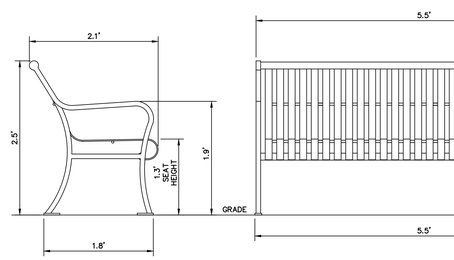

NOTES:

1. BASIS OF DESIGN: KEYSTONE RIDGE DESIGNS "PULLMAN" BENCH, 6-1½'/POLYESTER POWDER COATING FINISH, OR APPROVED EQUAL
2. COMPLETE INSTALLATION IN ACCORDANCE WITH MANUFACTURER'S SPECIFICATIONS.
3. VERIFY COLOR (FINISH) WITH OWNER'S REPRESENTATIVE, SEE MANUFACTURER'S SPECIFICATIONS.

16 BENCH
SCALE: N.T.S.

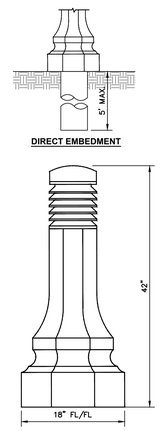

NOTES:

1. BASIS OF DESIGN: STRESSCRETE MODEL "BELMONT" OR APPROVED EQUAL.
2. INSTALL PER MANUFACTURER'S INSTALLATION GUIDELINES.

17 LIGHTED BOLLARD
SCALE: N.T.S.

ISSUE FOR BID	08-09-2024
Revisions:	Date:

CONSULTANT

MJ Engineering Architecture Landscape Architecture and Land Surveying, P.C.

ARCHITECT/ENGINEER OF RECORD

BANCROFT ARCHITECTS + ENGINEERS

3300 Dundee Rd.
Northbrook, IL 60062
T: 847.952.9362
www. bancroft-ae.com

STAMP

Registration Expires 10.31.2026

STATE OF NEW YORK — MICHAEL D. PANTELIS — LICENSED PROFESSIONAL ENGINEER — 075475

Office of Construction and Facilities Management

VA U.S. Department of Veterans Affairs

Drawing Title: CIVIL-SITE DETAILS	Phase: ISSUE FOR BID	Project Title: PARKING RAMP EXPANSION	Project Number: 528-18-375
			Building Number: 29
Approved: Project Director		Location: 3495 BAILEY AVE., BUFFALO, NY 14215	Drawing Number: C502
		Issue Date: 08-09-2024 / Checked / Drawn	

6/14/2009 12:39:03 PM

F:\MJ1663 - Buffalo VAMJ1663.01_C500-DETAILS.dwg

VA FORM 08 - 6231

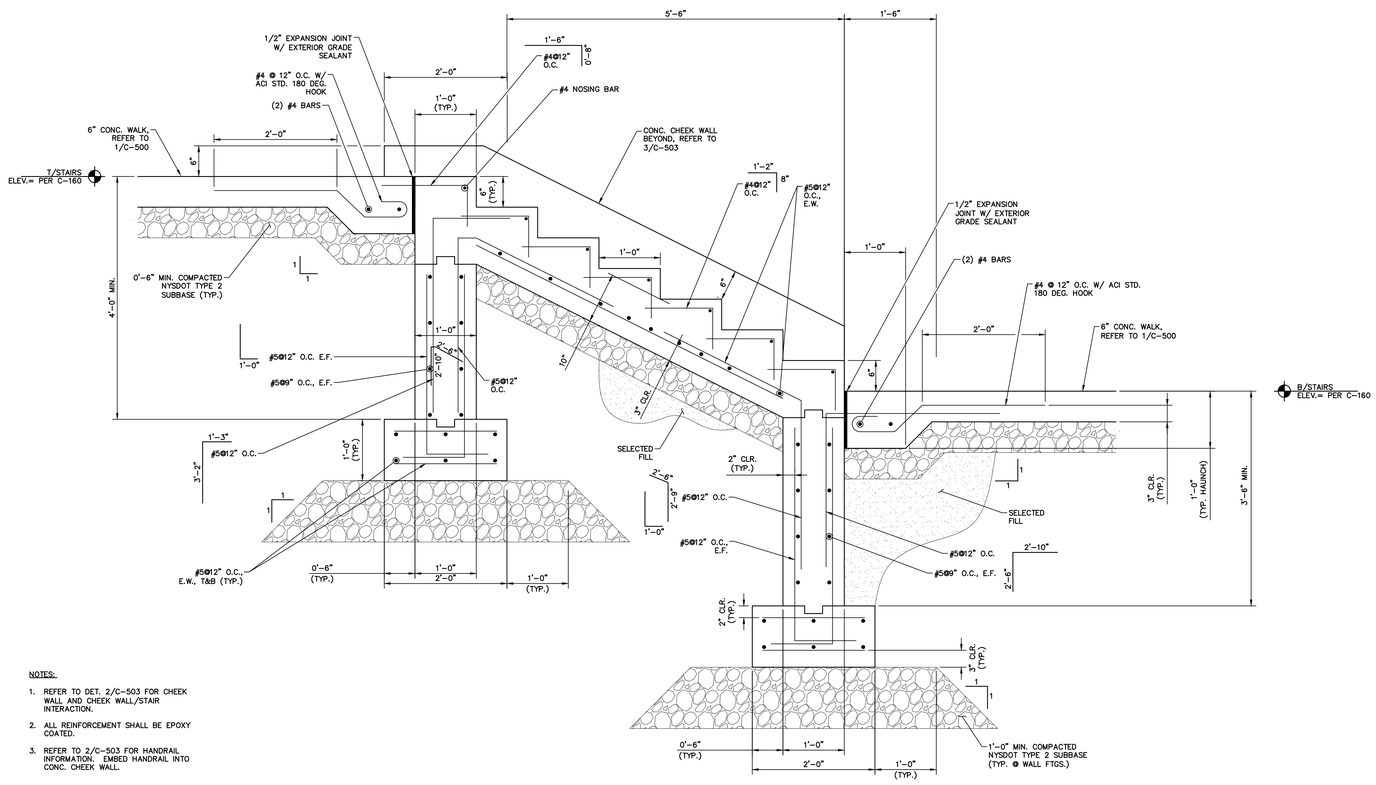

NOTES:

1. REFER TO DET. 2/C-503 FOR CHEEK WALL AND CHEEK WALL/STAIR INTERACTION.
2. ALL REINFORCEMENT SHALL BE EPOXY COATED.
3. REFER TO 2/C-503 FOR HANDRAIL INFORMATION. EMBED HANDRAIL INTO CONC. CHEEK WALL.

1 STAIR SECTION
SCALE: N.T.S.

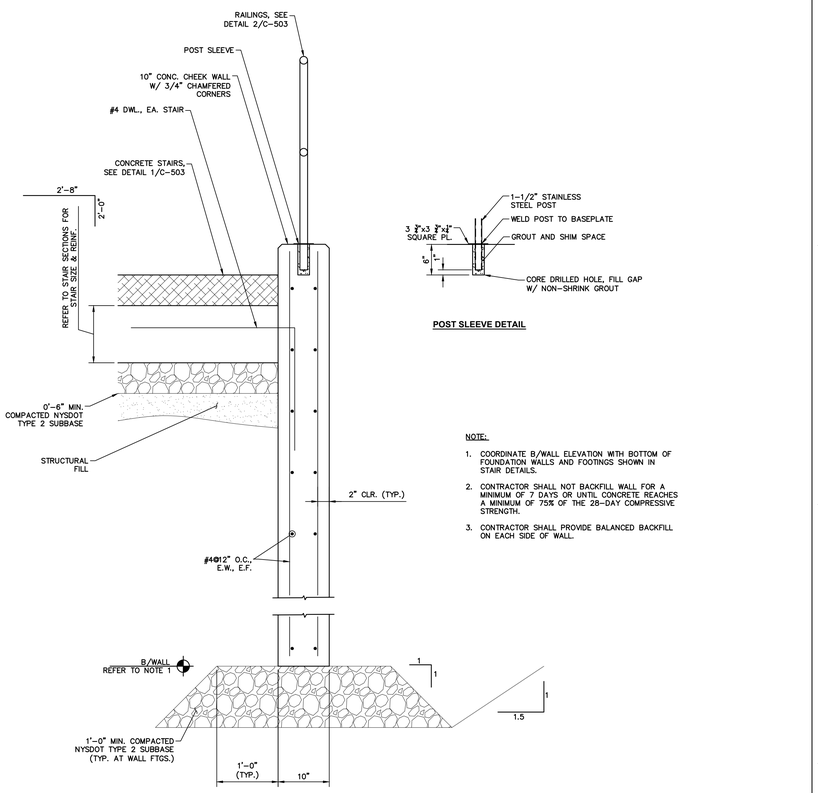

POST SLEEVE DETAIL

NOTE:

1. COORDINATE B/WALL ELEVATION WITH BOTTOM OF FOUNDATION WALLS AND FOOTINGS SHOWN IN STAIR DETAILS.
2. CONTRACTOR SHALL NOT BACKFILL WALL FOR A MINIMUM OF 7 DAYS OR UNTIL CONCRETE REACHES A MINIMUM OF 75% OF THE 28-DAY COMPRESSIVE STRENGTH.
3. CONTRACTOR SHALL PROVIDE BALANCED BACKFILL ON EACH SIDE OF WALL.

3 CHEEK WALL
SCALE: N.T.S.

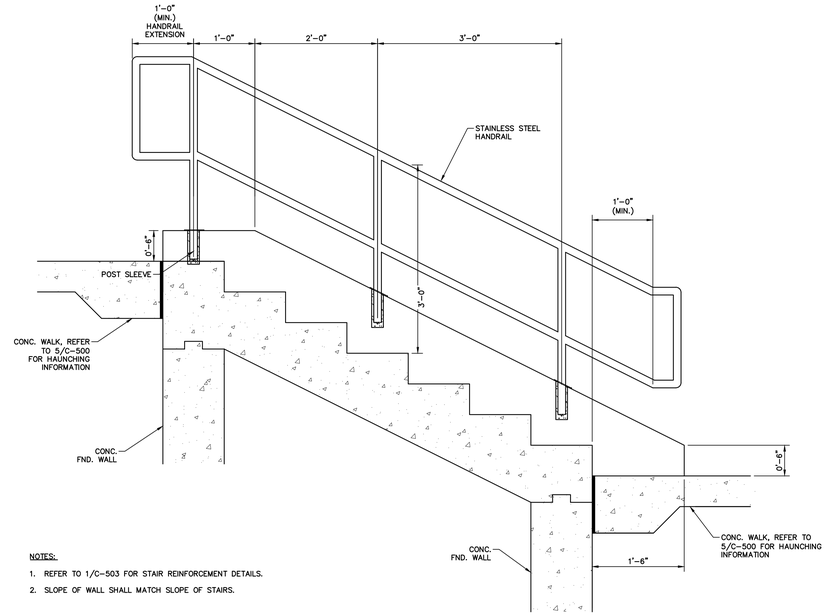

NOTES:

1. REFER TO 1/C-503 FOR STAIR REINFORCEMENT DETAILS.
2. SLOPE OF WALL SHALL MATCH SLOPE OF STAIRS.

2 RAILING DETAIL
SCALE: N.T.S.

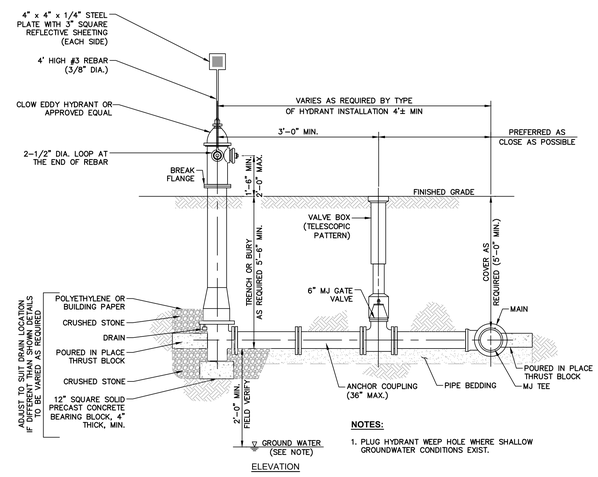

ELEVATION

NOTES:

1. PLUG HYDRANT WEEP HOLE WHERE SHALLOW GROUNDWATER CONDITIONS EXIST.

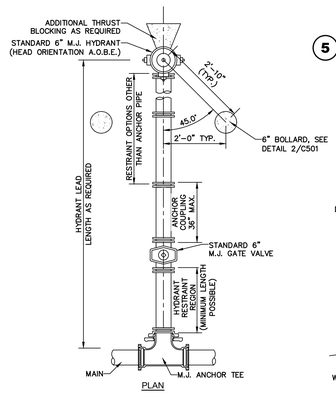

PLAN

4 TYPICAL HYDRANT INSTALLATION WITH BOLLARDS
SCALE: NTS

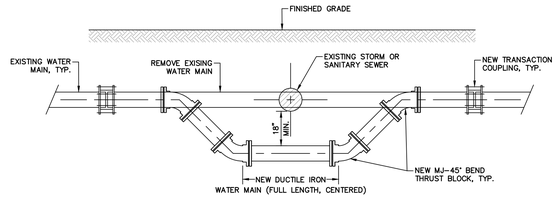

5 WATER MAIN RELOCATION
SCALE: NTS

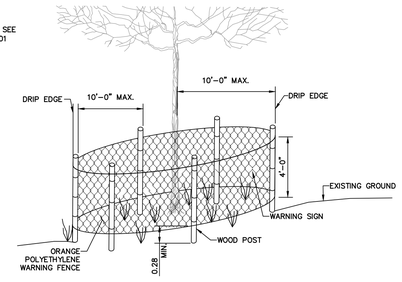

6 VEGETATION PROTECTION FENCE
SCALE: NTS

ISSUE FOR BID	08-09-2024
Revisions:	Date:

CONSULTANT

Engineering Architecture Landscape Architecture and Land Surveying, P.C.

ARCHITECT/ENGINEER OF RECORD

BANCROFT ARCHITECTS + ENGINEERS
3300 Dundee Rd.
Northbrook, IL 60062
T: 847.932.9362
www.bancroft-ae.com

STAMP
Registration Expires 10.31.2026
STATE OF NEW YORK — MICHAEL D. PANTILI — 071715 — LICENSED PROFESSIONAL ENGINEER

Office of Construction and Facilities Management

VA U.S. Department of Veterans Affairs

Drawing Title: CIVIL-SITE DETAILS	Phase: ISSUE FOR BID	Project Title: PARKING RAMP EXPANSION	Project Number: 528-18-375
			Building Number: 29
Approved: Project Director		Location: 3495 BAILEY AVE., BUFFALO, NY 14215	Drawing Number: C503
		Issue Date: 08-09-2024 / Checked / Drawn	

6/14/2009 12:28:03 PM

F:\MJ\1663 - Buffalo VAMJ1663.01_C500-DETAILS.dwg

VA FORM 08 - 6231