GRAPHIC SYMBOLS

Symbol	Description
#	DEMOLITION, ARCHITECTURAL AND ELEVATION KEYNOTE
XX	PARTITION TAG
XXXX	DOOR NUMBER
D	WINDOW TAG
XXX	EQUIPMENT NUMBER
NORTH	NORTH ARROW
	POINT OF CONNECTION
X/AXXX (DETAIL NUMBER, DRAWING NUMBER)	INTERIOR ELEVATION (SINGLE)
(DETAIL NUMBER, DRAWING NUMBER)	INTERIOR ELEVATION (MULTIPLE)
# AXXX (DETAIL NUMBER, SHEET NUMBER)	BUILDING & WALL SECTION
X XXXX (DETAIL NUMBER, SHEET NUMBER)	SECTION DETAIL
X AXXX (DRAWING NUMBER, DRAWING NUMBER)	DETAIL BUBBLE
#	REVISION CLOUD AND NUMBER
XXXXX 1001 (ROOM NAME, ROOM NUMBER)	ROOM TAG
ELEVATION +0'-0"	ELEVATION TAG
FEC-#	FIRE EXTINGUISHER CABINET
1 View Name 1/8" = 1'-0" (0 4' 8' 16')	DRAWING TITLE AND SCALE
DEDUCT ALT. # (ALTERNATE NUMBER)	BID DEDUCT ALTERNATE 1. REFER TO SPECIFICATION 01 00 00 GENERAL REQUIREMENTS FOR DESCRIPTION OF DEDUCT ALTERNATES. 2. REFER TO DRAWINGS FOR SCOPE OF DEDUCT ALTERNATES.

MATERIAL INDICATIONS

- EARTH
- GRAVEL
- CONCRETE
- CONCRETE MASONRY UNIT
- BRICK MASONRY
- STEEL/STAINLESS STEEL
- ALUMINUM
- WOOD BLOCKING / FRAMING
- PLYWOOD
- HARDWOOD
- RIGID INSULATION
- BATT INSULATION
- MORTAR/SAND/STUCCO/ GYPSUM BOARD SURFACE
- ACOUSTIC CEILING
- CERAMIC TILE
- SHIM OR NAILER

FLOOR PLAN LEGEND

- EXISTING CONSTRUCTION TO REMAIN
- EXISTING CONSTRUCTION TO BE REMOVED IN ITS ENTIRETY, INCLUDING WALL SWITCHES, OUTLETS, THERMOSTATS, ETC. PATCH ABUTTING WALLS, FLOORS AND CEILINGS. REMOVE EXISTING ITEMS SCHEDULED TO REMAIN AS NECESSARY TO ALLOW THE COMPLETE DEMOLITION OF SELECTED ITEMS. REPAIR/REPLACE EXISTING ITEMS ONCE DEMOLITION IS COMPLETED.
- EXISTING DOOR TO REMAIN
- EXISTING DOOR, FRAME AND HARDWARE TO BE REMOVED
- EXISTING DOOR TO BE REMOVED
- NEW DOOR, FRAME AND HARDWARE
- NEW DOOR
- NEW PARTITION
- AREA NOT IN CONTRACT
- PP — AUTOMATIC DOOR OPERATOR PUSH PLATE
- N — NURSE CALL PULL CORD
- N — NURSE CALL DOME LIGHT (IN CORRIDOR)
- S — WALL GUARDS: S = SURFACE MOUNTED CORNER GUARD (90° OR 135°)
- E — E = EDGE GUARD
- EQUIPMENT

ARCHITECTURAL ABBREVIATIONS

Abbreviation	Meaning
A	
ACT	ACOUSTICAL CEILING TILE
ADJ	ADJACENT
AFF	ABOVE FINISH FLOOR
AHU	AIR HANDLING UNIT
ALT	ALTERNATE
ALUM	ALUMINUM
APPROX	APPROXIMATE
AR	AS REQUIRED
AUTO	AUTOMATIC
AUX	AUXILIARY
AV	AUDIO VISUAL
AVG	AVERAGE
B	
BAT	BATTEN
BD	BOARD
BLDG	BUILDING
BLK	BLOCKING
BM	BEAM
BO	BY OWNER
BOD	BASIS OF DESIGN
C	
CC	CONTRACTOR SUPPLIED & INSTALLED
CEM	CEMENT
CJ	CONTROL JOINT
CL	CENTER LINE
CLG	CEILING
CLR	CLEAR
CMU	CONCRETE MASONRY UNIT
CO	CONTRACTING OFFICER
COL	COLUMN
CONC	CONCRETE
CONT	CONTINUOUS
COORD	COORDINATE
COR	CONTRACTING OFFICER'S REPRESENTATIVE
CORR.	CORRIDOR
CPT	CARPET
CT	CERAMIC TILE
CTR	CENTER
CTRL	CONTROL
D	
DAT	DATUM
DBL	DOUBLE
DEG	DEGREE
DEMO	DEMOLITION
DEPT	DEPARTMENT
DF	DRINKING FOUNTAIN
DIA	DIAMETER
DIFF	DIFFUSER
DIM	DIMENSION
DN	DOWN
DR	DOOR
DTL	DETAIL
DWG	DRAWING
E	
E	EAST
EA	EACH
EJ	EXPANSION JOINT
EL	ELEVATION
ELEC	ELECTRICAL
ELEV	ELEVATOR
ENCL	ENCLOSURE
EQ	EQUAL
EQUIP	EQUIPMENT
EWC	ELECTRIC WATER COOLER
EXH	EXHAUST
EXIST	EXISTING
EXP	EXPOSED
EXT	EXTERIOR
F	
FA	FIRE ALARM
FD	FLOOR DRAIN
FDN	FOUNDATION
FE	FIRE EXTINGUISHER
FEC	FIRE EXTINGUISHER CABINET
FF&E	FURNITURE, FIXTURE AND EQUIPMENT
FHC	FIRE HOSE CABINET
FIG	FIGURE
FIN	FINISH
FIXT	FIXTURE
FL	FLOOR
FO	FACE OF
FP	FIRE PROTECTION OR FIREPROOF
FT	FOOT
FTG	FOOTING
G	
GC	GENERAL CONTRACTOR
GL	GLASS
GYP BD	GYPSUM BOARD
H	
HAZ MAT	HAZARDOUS MATERIALS
HDW	HARWARE
HM	HOLLOW METAL
HPLAM	HIGH PRESSURE LAMINATE
HT	HEIGHT
I	
INCL	INCLUDED
INSUL	INSULATION
INT	INTERIOR
J	
J-BOX	JUNCTION BOX
JAN	JANITOR
JC	JANITOR'S CLOSET
JST	JOIST
JSN	JOINT SCHEDULE NUMBER
JT	JOINT
L	
LAM	LAMINATE
LAV	LAVATORY
LED	LIGHT EMITTING DIODE
LF	LINEAR FEET (FOOT)
LFD	LINEAR FLOOR DRAIN
LL	LEAD LINED
LT	LIGHT
M	
MATL	MATERIAL
MAX	MAXIMUM
MECH	MECHANICAL
MFR	MANUFACTURER
MIN	MINIMUM
MISC	MISCELLANEOUS
MLWK	MILLWORK
MO	MASONRY OPENING
MR	MOISTURE RESISTANT
MTD	MOUNTED
MTG	MOUNTING
MTL	METAL
N	
N	NORTH
N/A	NOT APPLICABLE
NAT	NATURAL
NIC	NOT IN CONTRACT
NO	NUMBER
NTS	NOT TO SCALE
O	
OA	OVERALL
OC	ON CENTER
OFIC	OWNER FURNISHED INSTALLED BY CONTRACTOR
OH	OPPOSITE HAND
OPNG	OPENING
OPT	OPTIONAL
P	
PAT	PATTERN
PL	PLATE
PLAM	PLASTIC LAMINATE
PLAS	PLASTER OR PLASTIC
PR	PAIR
PRE	PREFINISHED
PREP	PREPARATION
PROVIDE	FURNISHE AND INSTALL
PT	PAINT
PTME	PAINT TO MATCH EXISTING
PTN	PARTITION
PWR	POWER
PTS	PNEUMATIC TUBE SYSTEM
Q	
QT	QUARRY TILE
QTR	QUARTER
QTY	QUANTITY
R	
R	RADIUS
RB	RESILIENT BASE
RCP	REFLECTED CEILING PLAN
REC	RECESSED
RECPT	RECEPTACLE
REINF	REINFORCED
REQD	REQUIRED
RM	ROOM
RO	ROUGH OPENING
S	
S	SOUTH
SAN	SANITARY
SCHED	SCHEDULE
SF	SQUARE FOOT (FEET)
SHT	SHEET
SIM	SIMILAR
SOW	SCOPE OF WORK
SPEC	SPECIFICATION
SPKLR	SPRINKLER
SPKR	SPEAKER
SQ	SQUARE
SS	STAINLESS STEEL
STD	STANDARD
STL	STEEL
STOR	STORAGE
SUSP	SUSPEND
SV	SHEET VINYL
T	
T&G	TOUNGE AND GROOVE
TEMP	TEMPERED
TERR	TERRAZZO
THK	THICK
T.O.	TOP OF
TSTAT	THERMOSTAT
TYP	TYPICAL
U	
UNO	UNLESS NOTED OTHERWISE
V	
VAR	VARIES
VC	VA SUPPLIED, CONTRACTOR INSTALLED
VCT	VINYL COMPOSITION TILE
VENT	VENTILATION
VIF	VERIFY IN FIELD
VOL	VOLUME
VV	VA SUPPLIED & INSTALLED
VWC	VINYL WALL COVERING
W	
W	WEST
W/	WITH
W/O	WITHOUT
WC	WALL COVERING
WD	WOOD
WDW	WINDOW
WWM	WELDED WIRE FABRIC

INTERIOR ELEVATION LEGEND

- S S — LIGHT SWITCH
- D D — DATA & PHONE
- AV — FIRE ALARM HORN STROBE
- P P — ELECTRICAL OUTLETS
- CR — CARD READER
- V — FIRE ALARM STROBE ONLY
- PT — FINISH TAG. REFER TO ROOM FINISH SCHEDULE AND LEGEND ON SHEET GI601
- XXX — EQUIPMENT/FURNITURE/ACCESSORIES TAG
- X — WINDOW TAG
- PS — PRESSURE SENSOR
- T — THERMOSTAT

REFLECTED CEILING PLAN LEGEND

DEMOLITION LEGEND

- SUSPENDED ACOUSTIC CEILING TILE AND GRID TO BE REMOVED
- GYPSUM BOARD CEILING
- 2' X 4' LIGHT FIXTURE TO BE REMOVED
- 1' X 4' LIGHT FIXTURE TO BE REMOVED
- 2' X 2' LIGHT FIXTURE TO BE REMOVED
- 1' X 1' LIGHT FIXTURE TO BE REMOVED
- STRIP LIGHT TO BE REMOVED
- WALL MOUNTED LIGHT FIXTURE TO BE REMOVED
- EXIT — CEILING MOUNTED EXIT LIGHT TO BE REMOVED
- RETURN AIR DIFFUSER TO BE REMOVED. REFER TO MECHANICAL.
- EXHAUST FAN TO BE REMOVED. REFER TO MECHANICAL.
- SUPPLY AIR DIFFUSER TO BE REMOVED. REFER TO MECHANICAL.
- SPRINKLER HEAD TO BE REMOVED. REFER TO FIRE PROTECTION.
- WAP — WIRELESS ACCESS POINT TO BE REMOVED, STORED AND REINSTALLED. REFER TO ELECTRICAL DRAWINGS.
- C — CAMERA TO BE REMOVED, STORED AND REINSTALLED. REFER TO ELECTRICAL DRAWINGS.
- NTS — NURSE TRACKING SYSTEM. REFER TO ELECTRICAL DRAWINGS. VA TO REMOVE, STORE AND REINSTALL.
- DRAS — DISTRIBUTED RADIO ANTENNA SYSTEM TO BE REMOVED.
- "CITRIX" SECURITY SYSTEM. REFER TO ELECTRICAL DRAWINGS. VA TO REMOVE, STORE AND REINSTALL.
- CEILING MOUNTED NURSE DOME LIGHT TO BE REMOVED.
- S — SPEAKER TO BE REMOVED. REFER TO ELECTRICAL.

NEW LEGEND

- SUSPENDED ACOUSTIC CEILING SYSTEM AS SCHEDULED
- GYPSUM BOARD CEILING SYSTEM AS SCHEDULED
- 2' X 4' LIGHT FIXTURE. REFER TO ELECTRICAL.
- 2' X 2' LIGHT FIXTURE. REFER TO ELECTRICAL.
- STRIP LIGHT TO BE REMOVED
- WALL MOUNTED LIGHT FIXTURE TO BE REMOVED
- WALL MOUNTED LIGHT FIXTURE TO BE REMOVED
- EXIT LIGHT. REFER TO ELECTRICAL DRAWINGS.
- RETURN AIR DIFFUSER. REFER TO MECHANICAL DRAWINGS.
- EXHAUST FAN. REFER TO MECHANICAL DRAWINGS.
- SUPPLY AIR DIFFUSER. REFER TO MECHANICAL DRAWINGS.
- SEMI-RECESSED PENDANT SPRINKLER HEAD. REFER TO FIRE PROTECTION.
- SEMI-RECESSED DRY PENDAT SPRINKLER HEAD. REFER TO FIRE PROTECTION.
- UPRIGHT PENDANT SPRINKLER HEAD. REFER TO FIRE PROTECTION.
- SIDEWALL SPRINKLER HEAD. REFER TO FIRE PROTECTION.
- WAP — WIRELESS ACCESS POINT.REFER TO FIRE PROTECTION.
- C — CAMERA. REFER TO ELECTRICAL DRAWINGS.
- DRAS — DISTRIBUTED RADIO ANTENNA SYSTEM. REFER TO ELECTRICAL DRAWINGS. VA TO REMOVE, STORE AND REINSTALL
- S — SPEAKER. REFER TO ELECTRICAL.
- N — CEILING MOUNTED NURSE DOME LIGHT. REFER TO ELECTRICAL DRAWINGS.
- CEILING ACCESS PANEL, SEE PLAN FOR SIZES

ISSUE FOR BID	08-09-2024
Revisions:	Date:

CONSULTANT

ARCHITECT/ENGINEER OF RECORD

BANCROFT ARCHITECTS + ENGINEERS
3300 Dundee Rd.
Northbrook, IL 60062
T: 847.952.9362
www. bancroft-ae.com

STAMP

LICENSED ARCHITECT CROTAN D. ZAKARIJA 001.022355 STATE OF ILLINOIS 8/9/24

Office of Construction and Facilities Management

VA U.S. Department of Veterans Affairs

Drawing Title	ARCHITECTURAL- ABBREVIATIONS AND SYMBOLS LEGEND
Approved: Project Director	
Phase	ISSUE FOR BID
Project Title	PARKING RAMP EXPANSION
Location	3495 BAILEY AVE., BUFFALO, NY 14215
Issue Date	08-09-2024
Checked	CZ
Drawn	II
Project Number	528-18-375
Building Number	29
Drawing Number	A001

K:\CCG_PROJECTS\2021\21-113 - Parking Ramp (Buffalo, NY)\400- DesDocs\402- Drawings\WORKING\21-113_A001.dwg
6/14/2009 12:39:03 PM

MOUNTING DIMENSIONS (NOTE: THIS IS A "UNIVERSAL SHEET", ITEMS SHOWN MAY NOT ALL BE APPLICABLE TO THIS PROJECT)

NOTES:
1. MOUNTING DIMENSIONS SHOW ACCESSIBLE AND NON-ACCESSIBLE CONDITIONS. WHEN ONLY ONE OPTION IS SHOWN - ALL ITEMS IN PROJECT SHALL BE ACCESSIBLE. WHEN ITEMS CAN BE ACCESSIBLE OR NON ACCESSIBLE DRAWINGS SHALL INDICATE LOCATION OF ACCESSIBLE ITEMS BY THIS SYMBOL:

2. COORDINATE ITEMS SHOWN ON THIS DRAWING WITH PLANS AND SPECIFICATIONS FOR ACTUAL ITEMS USED ON THIS PROJECT. EVERY ITEM SHOWN ON THIS DRAWING MAY NOT BE USED ON THIS PROJECT.

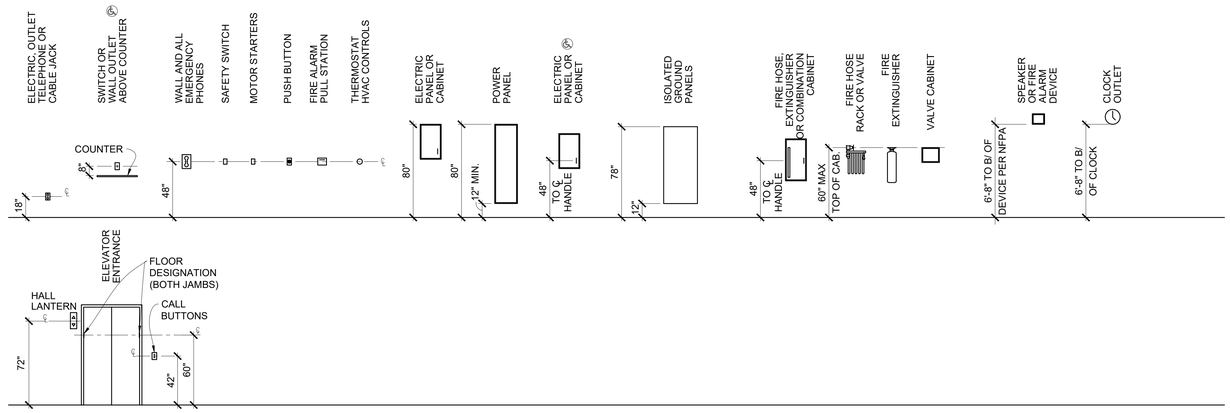

ISSUE FOR BID	08-09-2024
Revisions:	Date:

CONSULTANT

ARCHITECT/ENGINEER OF RECORD

BANCROFT ARCHITECTS + ENGINEERS
3300 Dundee Rd.
Northbrook, IL 60062
T: 847.952.9362
www.bancroft-ae.com

STAMP

LICENSED ARCHITECT CHRISTINA D. ZABARAS 001.020559 EXPIRATION 11/30/2024 STATE OF ILLINOIS

Office of Construction and Facilities Management

VA U.S. Department of Veterans Affairs

Drawing Title: ARCHITECTURAL- STANDARD MOUNTING HEIGHTS

Phase: ISSUE FOR BID

Project Title: PARKING RAMP EXPANSION

Project Number: 528-18-375

Building Number: 29

Approved: Project Director

Location: 3495 BAILEY AVE., BUFFALO, NY 14215

Issue Date: 08-09-2024 | Checked: CZ | Drawn: II

Drawing Number: A002

K:\CCG_PROJECTS\2021\21-113 - Parking Ramp (Buffalo, NY)\400- Dwg\Dwgs\WORKING\21-113_A002.dwg

6/14/2009 12:39:03 PM

VA FORM 08 - 6231

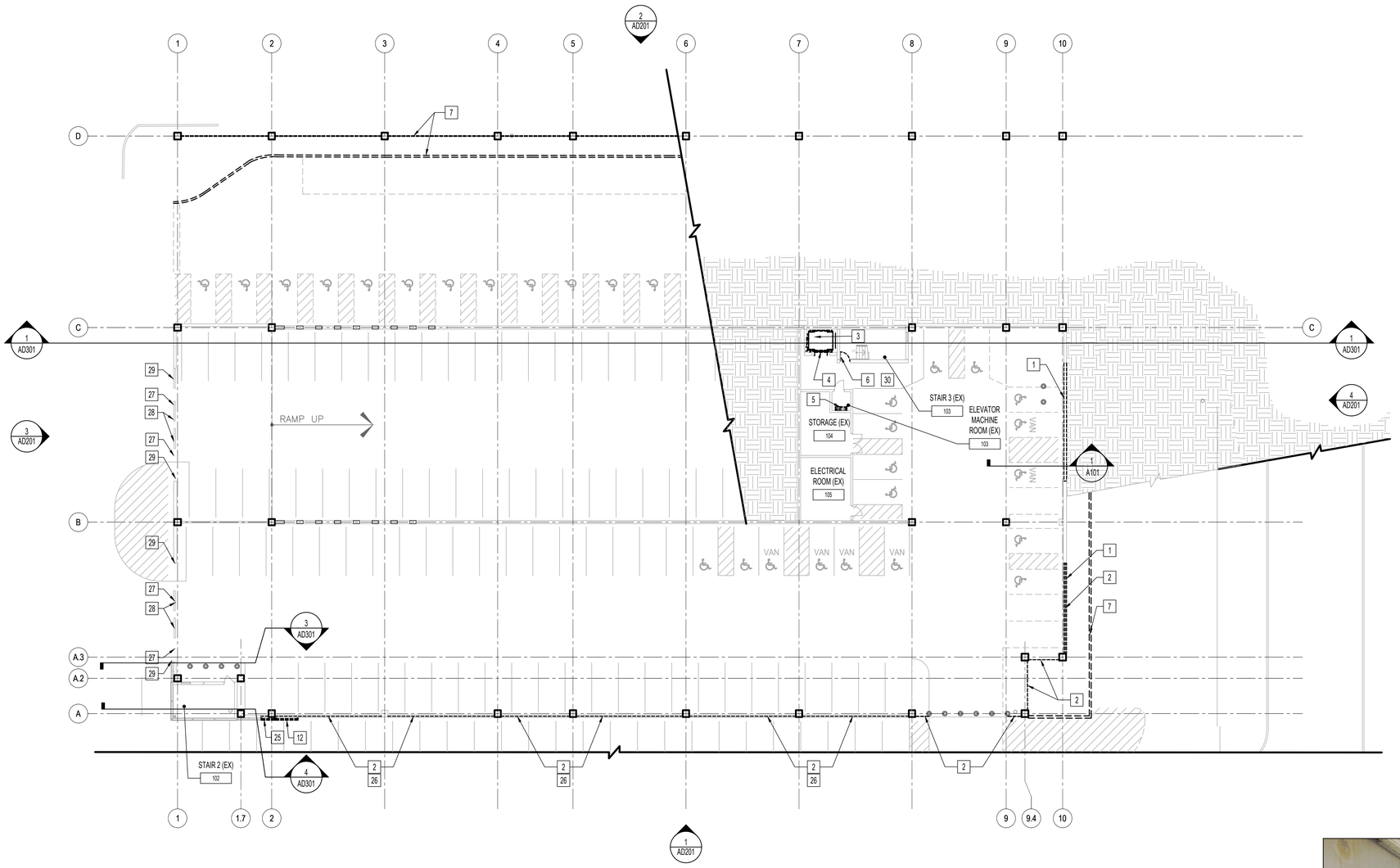

1 DEMOLITION PLAN - LEVEL 1
1/16"=1'-0"

0 4" 8" 16" 32"

DEMOLITION PLAN LEGEND

EXISTING CONSTRUCTION TO REMAIN

EXISTING DOOR TO BE REMOVED- REFER TO KEYNOTES

EXISTING CONSTRUCTION TO BE REMOVED IN ITS ENTIRETY, INCLUDING WALL SWITCHES, OUTLETS, THERMOSTATS, ETC. REFER TO ENLARGED PLANS FOR ADDITIONAL NOTES.

GENERAL DEMOLITION NOTES

A. REFER TO SHEET GI002 FOR BID DEDUCT ALTERNATE DESCRIPTIONS & GI003 FOR GENERAL DEMOLITION NOTES.

B. COORDINATE EXTENT OF DEMOLITION AREAS WITH NEW FLOOR PLANS & ASSOCIATED DISCIPLINE DRAWINGS.

C. REVIEW THIS DRAWING IN CONJUNCTION WITH CORRESPONDING STRUCTURAL, CIVIL, FIRE PROTECTION, PLUMBING, MECHANICAL AND ELECTRICAL DRAWINGS FOR FULL SCOPE OF DEMOLITION WORK.

D. ALL DIMENSIONS INDICATED FOR LENGTH OF WALL / PARTITION TO BE REMOVED IS APPROXIMATE AND SUBJECT TO ANY ADDITIONAL DEMOLITION NECESSARY TO PROPERLY SPLICE IN THE NEW WORK ASSEMBLY AND PROVIDE FOR DOOR UNIT INSTALLATION AS PER THE DETAILS.

E. SEAL / FIRESTOP ALL OPENINGS IN EXISTING SMOKE AND FIRE RATED PARTITIONS AND FIRE RATED FLOORS THAT ARE ENCOUNTERED DURING DEMOLITION. INCLUDES ALL EXPOSED CONDUIT AND PIPING.

F. CONSTRUCTION ACTIVITIES THAT CREATE DUST PARTICULATES, SUCH AS CUTTING, SAW CUTTING, PIPE AND DUCT CUTTING, ETC. SHALL BE KEPT WITHIN THE PERIMETER OF THE NEW WORK.

G. REPLACE / RESPRAY FIREPROOFING THAT HAS BEEN KNOCKED OFF BEAMS, COLUMNS, ETC. DURING DEMOLITION.

H. REFER TO STRUCTURAL RESTORATION DRAWINGS FOR ADDITIONAL DEMOLITION SCOPE.

I. REMOVE ALL EXISTING SIGNAGE THROUGHOUT GARAGE UNLESS NOTED OTHERWISE. ALL SIGNAGE SHALL BE RETURNED TO THE VA UNLESS DIRECTED OTHERWISE. COORDINATE ALL SIGNAGE SCOPE WITH NEW WORK. REFER TO WAYFINDING SHEETS (AW SERIES) FOR SCOPE OF NEW SIGNAGE.

X DEMOLITION PLAN KEY NOTES

* NOTE: NOT ALL NOTES MAY BE USED ON THIS SHEET

1. REMOVE PORTION OF EXISTING PRECAST CONCRETE WALL. COORDINATE EXTENTS WITH STRUCTURAL DRAWINGS.
2. REMOVE EXISTING STEEL RAILING AND MOUNTING HARDWARE IN ITS ENTIRETY- TYPICAL THROUGHOUT. PATCH AND REPAIR CONCRETE TO MATCH ADJACENT SURFACE. SEE PHOTOGRAPH AD101 FOR REFERENCE. DEDUCT ALTERNATE #6: EXISTING STEEL RAIL TO REMAIN. PROVIDE MESH FABRIC AT ALL PRECAST OPENINGS. SEE 5/A506.
3. REMOVE ELEVATOR ASSEMBLY AND ALL ASSOCIATED COMPONENTS IN ITS ENTIRETY.
4. REMOVE ELEVATOR DOOR, FRAME, THRESHOLD, PUSH-BUTTON CONTROLS ETC. IN ITS ENTIRETY. PREP ADJACENT SURFACES FOR INFILL- AS SHOWN IN NEW SCOPE OF WORK.
5. REMOVE ELEVATOR CONTROL EQUIPMENT IN ITS ENTIRETY. COORDINATE W/ ELECTRICAL DEMOLITION DRAWINGS.
6. REMOVE EXISTING DOOR PANEL & ASSOCIATED HARDWARE. EXISTING FRAME TO REMAIN UNLESS DAMAGED AND UNABLE TO RECEIVE NEW DOOR. SEE DOOR SCHEDULE FOR MORE INFORMATION.
7. SITE-RELATED DEMOLITION SHOWN FOR REFERENCE AND SCHEMATIC PURPOSES ONLY. COORDINATE EXACT EXTENTS OF DEMO WITH CIVIL DRAWINGS.
8. REMOVE EXISTING STOREFRONT FRAMING & GLAZING SYSTEM IN ITS ENTIRETY. PREP ADJACENT SURFACES FOR INFILL- AS SHOWN IN THE NEW SCOPE OF WORK.
9. REMOVE EXISTING BOLLARD AND ASSOCIATED ANCHORAGE. PATCH AND REPAIR CONCRETE TO MATCH ADJACENT SURFACE.
10. REMOVE EXISTING VESTIBULE ENCLOSURE ASSEMBLY IN ITS ENTIRETY. INCLUDING, BUT NOT LIMITED TO, CONCRETE KNEEWALLS, ALUMINUM STOREFRONT & GLAZING, STRUCTURAL STEEL, ROOFING, ETC. PATCH AND REPAIR CONCRETE SHAFTWALLS TO MATCH ADJACENT SURFACES.
11. REMOVE PORTION OF EXISTING TUBE STEEL GUARDRAIL. PATCH AND REPAIR CONCRETE SURFACE TO RECEIVE NEW. SEE DETAILS SHEET.
12. REMOVE SECTION OF EXISTING ALUM. ARCHITECTURAL SCREEN SYSTEM & ASSOCIATED STRUCTURAL STEEL SUPPORTS- COORDINATE EXTENT OF SCREEN REMOVAL WITH DEMOLITION ELEVATIONS. REFER TO SHEET AD103 FOR SUPPORTING PHOTOS. REPLACE ANY LOUVERS DUE TO DAMAGE DURING DEMOLITION / CONSTRUCTION.
13. REMOVE SECTION OF EXISTING CURTAINWALL SYSTEM & ASSOCIATED STRUCTURAL STEEL SUPPORTS- COORDINATE EXTENT OF REMOVAL TO NEAREST CLIP ANGLE & MAINTAIN COMPLETE FRAMING / GLAZING PANEL. REPLACE ANY FRAMES / PANELS DUE TO DAMAGE DURING DEMOLITION / CONSTRUCTION. REFER TO SHEET AD103 FOR SUPPORTING PHOTOS.
14. REMOVE EXISTING ROOF ASSEMBLY IN ITS ENTIRETY DOWN TO PRECAST SLAB. PREP SLAB TO RECEIVE NEW- COORDINATE WITH STRUCTURAL DRAWINGS.
15. REMOVE EXISTING MECHANICAL UNIT IN ITS ENTIRETY- COORDINATE WITH MECHANICAL DEMOLITION DRAWINGS.
16. REMOVE EXISTING ROOFING ASSEMBLY IN ITS ENTIRETY- COORDINATE WITH STRUCTURAL DRAWINGS.
17. REMOVE EXISTING VESTIBULE ROOFING ASSEMBLY IN ITS ENTIRETY. INCLUDING, BUT NOT LIMITED TO, STRUCTURAL STEEL FRAMING, DECKING, COPING, ETC.
18. REMOVE EXISTING DOOR & FRAME IN ITS ENTIRETY. PREP ADJACENT SURFACES TO RECEIVE NEW FRAME & DOOR- SEE HARDWARE SCHEDULE.
19. REMOVE EXISTING LIGHT POLE AND ANCHOR COMPONENTS. SCRAPE CLEAN THE TOP OF EXISTING PRECAST COLUMN IN PREPARATION FOR NEW WORK. COORDINATE WITH ELECTRICAL DRAWINGS.CONTRACTOR SHALL SALVAGE, PROTECT, AND STORE LIGHT POLES FOR REUSE AS PART OF DEDUCT ALTERNATE #3.
20. REMOVE EXISTING CANTILEVERED ALUMINUM SUNSHADE SYSTEM AND ASSOCIATED ANCHOR COMPONENTS. USE THIS EXISTING SUNSHADE LOUVER TO MATCH EXACTLY IN KIND THE NEW WORK. COORDINATE WITH PLANS, ELEVATIONS AND DETAILS.
21. EXISTING ALUMINUM ARCHITECTURAL SCREEN SYSTEM TO REMAIN. PROTECT THROUGHOUT PROJECT DURATION AND REPLACE AS NEEDED IF DAMAGED. REFER TO SHEET AD103 FOR SUPPORTING PHOTOS.
22. REMOVE EXISTING STEEL GUARD RAILS, WIRE MESH SCREEN PANELS, AND ASSOCIATED MOUNTING HARDWARE IN THEIR ENTIRETY. PATCH / REPAIR CONCRETE TO MATCH ADJACENT SURFACES.
23. REMOVE EXISTING METAL GUARDRAIL IN ITS ENTIRETY. COORDINATE WITH CIVIL DRAWINGS.
24. REMOVE EXISTING DOWNSPOUT AND CAP DRAIN. COORDINATE WITH PLUMBING DRAWINGS.
25. REMOVE EXISTING CURTAINWALL SYSTEM IN ITS ENTIRETY. REFER TO SHEET AD103 FOR SUPPORTING PHOTOS.
26. REMOVE EXISTING FABRIC SCREEN INFILL AND ASSOCIATED ANCHORING / FASTENING HARDWARE. PATCH / REPAIR PCC TO MATCH ADJACENT SURFACE.
27. EXISTING ENTRANCE/EXIT SIGNS ON PRECAST PANEL ABOVE TO REMAIN.
28. EXISTING OVERHEAD HANGING CLEARANCE BAR SIGNAGE TO REMAIN. PROTECT DURING CONSTRUCTION . REMOVE, PROTECT AND STORE FOR LATER REINSTALLATION WHEN LEAVING IN PLACE RISKS DAMAGE DURING CONSTRUCTION PROCESSES.
29. EXISTING PEDESTRIAN CROSSING SIGNS TO REMAIN.

EXISTING STEEL RAIL AND MOUNTING HARDWARE TO BE REMOVED. PATCH, REPAIR, INFILL AS REQUIRED TO MATCH ADJACENT SURFACE. THROUGHOUT, TYP.
DEDUCT ALTERNATE #6: EXISTING STEEL RAIL SHALL REMAIN. PROVIDE MESH FABRIC AT ALL PRECAST OPENINGS. SEE 5/A506.

2 GUARDRAIL - TYP.
NTS

ISSUE FOR BID	08-09-2024
Revisions:	Date:

CONSULTANT

ARCHITECT/ENGINEER OF RECORD

BANCROFT ARCHITECTS + ENGINEERS
3300 Dundee Rd.
Northbrook, IL 60062
T: 847.952.9362
www. bancroft-ae.com

STAMP

LICENSED ARCHITECT 5-4124 CHENYA D. CAVENA NOVEMBER 30, 2024 STATE OF ILLINOIS

Office of Construction and Facilities Management

VA U.S. Department of Veterans Affairs

Drawing Title: ARCHITECTURAL- DEMOLITION PLAN - LEVEL 1	Phase: ISSUE FOR BID	Project Title: PARKING RAMP EXPANSION	Project Number: 528-18-375
			Building Number: 29
Approved: Project Director		Location: 3495 BAILEY AVE., BUFFALO, NY 14215	Drawing Number: AD101
		Issue Date: 08-09-2024 / Checked: CZ / Drawn: II	

K:\CCO_PROJECTS\2021\21-113 - Parking Ramp (Buffalo, NY)\400- DesDocs\400- Drawings\WORKING\21-113_AD101.dwg
6/14/2209 12:39:03 PM
VA FORM 08 - 6231

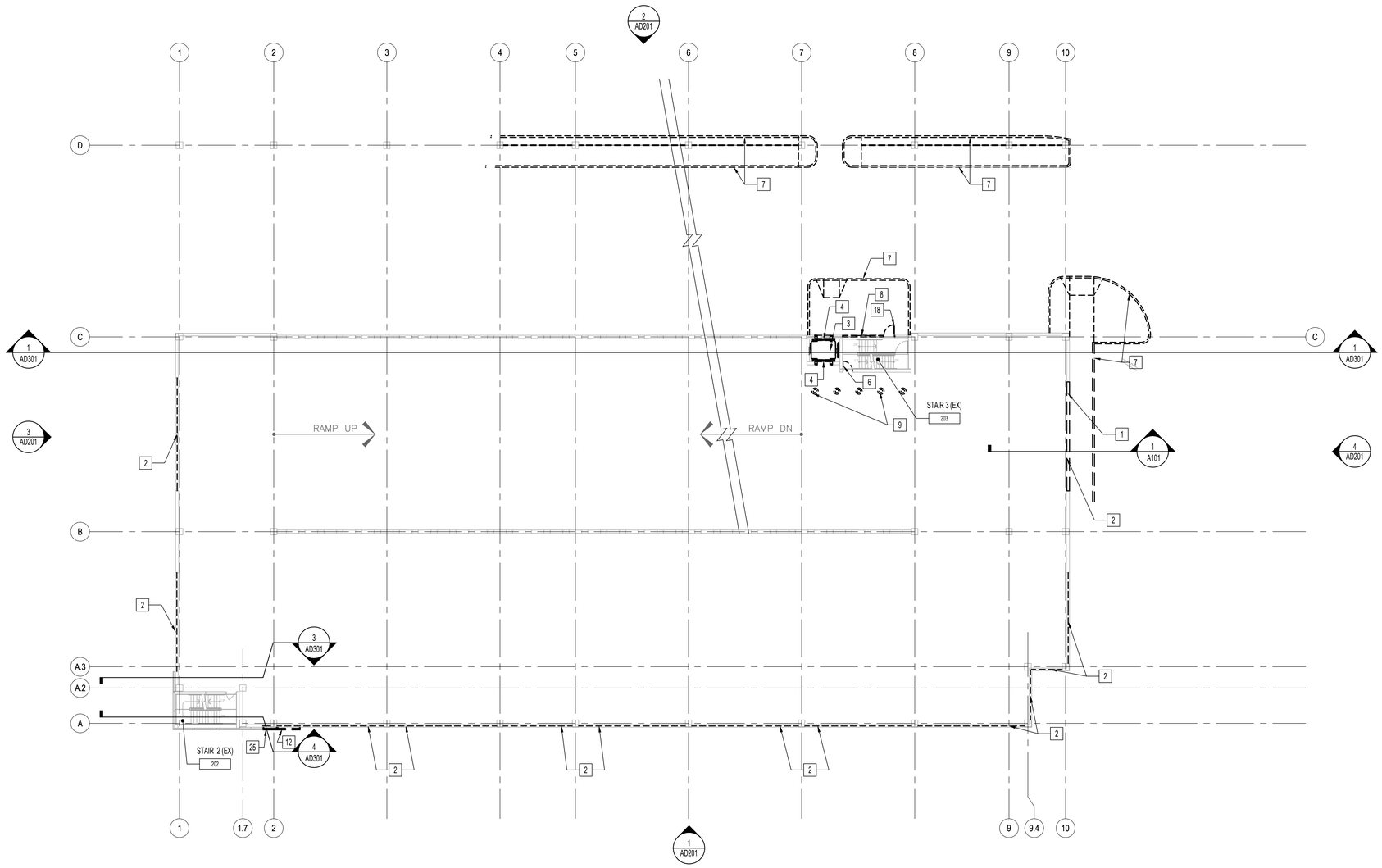

1 DEMOLITION PLAN - LEVEL 2

1/16"=1'-0"

DEMOLITION PLAN LEGEND

EXISTING CONSTRUCTION TO REMAIN

EXISTING DOOR TO BE REMOVED- REFER TO KEYNOTES

EXISTING CONSTRUCTION TO BE REMOVED IN ITS ENTIRETY, INCLUDING WALL SWITCHES, OUTLETS, THERMOSTATS, ETC. REFER TO ENLARGED PLANS FOR ADDITIONAL NOTES.

GENERAL DEMOLITION NOTES

A. REFER TO SHEET GI002 FOR BID DEDUCT ALTERNATE DESCRIPTIONS & GI003 FOR GENERAL DEMOLITION NOTES.

B. COORDINATE EXTENT OF DEMOLITION AREAS WITH NEW FLOOR PLANS & ASSOCIATED DISCIPLINE DRAWINGS.

C. REVIEW THIS DRAWING IN CONJUNCTION WITH CORRESPONDING STRUCTURAL, CIVIL, FIRE PROTECTION, PLUMBING, MECHANICAL AND ELECTRICAL DRAWINGS FOR FULL SCOPE OF DEMOLITION WORK.

D. ALL DIMENSIONS INDICATED FOR LENGTH OF WALL / PARTITION TO BE REMOVED IS APPROXIMATE AND SUBJECT TO ANY ADDITIONAL DEMOLITION NECESSARY TO PROPERLY SPLICE IN THE NEW WORK ASSEMBLY AND PROVIDE FOR DOOR UNIT INSTALLATION AS PER THE DETAILS.

E. SEAL / FIRESTOP ALL OPENINGS IN EXISTING SMOKE AND FIRE RATED PARTITIONS AND FIRE RATED FLOORS THAT ARE ENCOUNTERED DURING DEMOLITION. INCLUDES ALL EXPOSED CONDUIT AND PIPING.

F. CONSTRUCTION ACTIVITIES THAT CREATE DUST PARTICULATES, SUCH AS CUTTING, SAW CUTTING, PIPE AND DUCT CUTTING, ETC. SHALL BE KEPT WITHIN THE PERIMETER OF THE NEW WORK.

G. REPLACE / RESPRAY FIREPROOFING THAT HAS BEEN KNOCKED OFF BEAMS, COLUMNS, ETC. DURING DEMOLITION.

H. REFER TO STRUCTURAL RESTORATION DRAWINGS FOR ADDITIONAL DEMOLITION SCOPE.

I. REMOVE ALL EXISTING SIGNAGE THROUGHOUT GARAGE UNLESS NOTED OTHERWISE. ALL SIGNAGE SHALL BE RETURNED TO THE VA UNLESS DIRECTED OTHERWISE. COORDINATE ALL SIGNAGE SCOPE WITH NEW WORK. REFER TO WAYFINDING SHEETS (AW SERIES) FOR SCOPE OF NEW SIGNAGE.

X DEMOLITION PLAN KEY NOTES

* NOTE: NOT ALL NOTES MAY BE USED ON THIS SHEET

1. REMOVE PORTION OF EXISTING PRECAST CONCRETE WALL. COORDINATE EXTENTS WITH STRUCTURAL DRAWINGS.
2. REMOVE EXISTING STEEL RAILING AND MOUNTING HARDWARE IN ITS ENTIRETY- TYPICAL THROUGHOUT. PATCH AND REPAIR CONCRETE TO MATCH ADJACENT SURFACE. SEE PHOTOGRAPH AD101 FOR REFERENCE. DEDUCT ALTERNATE #6: EXISTING STEEL RAIL TO REMAIN. PROVIDE MESH FABRIC AT ALL PRECAST OPENINGS. SEE 5/A506.
3. REMOVE ELEVATOR ASSEMBLY AND ALL ASSOCIATED COMPONENTS IN ITS ENTIRETY.
4. REMOVE ELEVATOR DOOR, FRAME, THRESHOLD, PUSH-BUTTON CONTROLS ETC. IN ITS ENTIRETY. PREP ADJACENT SURFACES FOR INFILL- AS SHOWN IN NEW SCOPE OF WORK.
5. REMOVE ELEVATOR CONTROL EQUIPMENT IN ITS ENTIRETY. COORDINATE W/ ELECTRICAL DEMOLITION DRAWINGS.
6. REMOVE EXISTING DOOR PANEL & ASSOCIATED HARDWARE. EXISTING FRAME TO REMAIN UNLESS DAMAGED AND UNABLE TO RECEIVE NEW DOOR. SEE DOOR SCHEDULE FOR MORE INFORMATION.
7. SITE-RELATED DEMOLITION SHOWN FOR REFERENCE AND SCHEMATIC PURPOSES ONLY. COORDINATE EXACT EXTENTS OF DEMO WITH CIVIL DRAWINGS.
8. REMOVE EXISTING STOREFRONT FRAMING & GLAZING SYSTEM IN ITS ENTIRETY. PREP ADJACENT SURFACES FOR INFILL- AS SHOWN IN THE NEW SCOPE OF WORK.
9. REMOVE EXISTING BOLLARD AND ASSOCIATED ANCHORAGE. PATCH AND REPAIR CONCRETE TO MATCH ADJACENT SURFACE.
10. REMOVE EXISTING VESTIBULE ENCLOSURE ASSEMBLY IN ITS ENTIRETY. INCLUDING, BUT NOT LIMITED TO, CONCRETE KNEEWALLS, ALUMINUM STOREFRONT & GLAZING, STRUCTURAL STEEL, ROOFING, ETC. PATCH AND REPAIR CONCRETE SHAFTWALLS TO MATCH ADJACENT SURFACES.
11. REMOVE PORTION OF EXISTING TUBE STEEL GUARDRAIL. PATCH AND REPAIR CONCRETE SURFACE TO RECEIVE NEW. SEE DETAILS SHEET.
12. REMOVE SECTION OF EXISTING ALUM. ARCHITECTURAL SCREEN SYSTEM & ASSOCIATED STRUCTURAL STEEL SUPPORTS- COORDINATE EXTENT OF SCREEN REMOVAL WITH DEMOLITION ELEVATIONS. REFER TO SHEET AD103 FOR SUPPORTING PHOTOS. REPLACE ANY LOUVERS DUE TO DAMAGE DURING DEMOLITION / CONSTRUCTION.
13. REMOVE SECTION OF EXISTING CURTAINWALL SYSTEM & ASSOCIATED STRUCTURAL STEEL SUPPORTS- COORDINATE EXTENT OF REMOVAL TO NEAREST CLIP ANGLE & MAINTAIN COMPLETE FRAMING / GLAZING PANEL. REPLACE ANY FRAMES / PANELS DUE TO DAMAGE DURING DEMOLITION / CONSTRUCTION. REFER TO SHEET AD103 FOR SUPPORTING PHOTOS.
14. REMOVE EXISTING ROOF ASSEMBLY IN ITS ENTIRETY DOWN TO PRECAST SLAB. PREP SLAB TO RECEIVE NEW- COORDINATE WITH STRUCTURAL DRAWINGS.
15. REMOVE EXISTING MECHANICAL UNIT IN ITS ENTIRETY- COORDINATE WITH MECHANICAL DEMOLITION DRAWINGS.
16. REMOVE EXISTING ROOFING ASSEMBLY IN ITS ENTIRETY- COORDINATE WITH STRUCTURAL DRAWINGS.
17. REMOVE EXISTING VESTIBULE ROOFING ASSEMBLY IN ITS ENTIRETY. INCLUDING, BUT NOT LIMITED TO, STRUCTURAL STEEL FRAMING, DECKING, COPING, ETC.
18. REMOVE EXISTING DOOR & FRAME IN ITS ENTIRETY. PREP ADJACENT SURFACES TO RECEIVE NEW FRAME & DOOR- SEE HARDWARE SCHEDULE.
19. REMOVE EXISTING LIGHT POLE AND ANCHOR COMPONENTS. SCRAPE CLEAN THE TOP OF EXISTING PRECAST COLUMN IN PREPARATION FOR NEW WORK. COORDINATE WITH ELECTRICAL DRAWINGS.CONTRACTOR SHALL SALVAGE, PROTECT, AND STORE LIGHT POLES FOR REUSE AS PART OF DEDUCT ALTERNATE #3.
20. REMOVE EXISTING CANTILEVERED ALUMINUM SUNSHADE SYSTEM AND ASSOCIATED ANCHOR COMPONENTS. USE THIS EXISTING SUNSHADE LOUVER TO MATCH EXACTLY IN KIND THE NEW WORK. COORDINATE WITH PLANS, ELEVATIONS AND DETAILS.
21. EXISTING ALUMINUM ARCHITECTURAL SCREEN SYSTEM TO REMAIN. PROTECT THROUGHOUT PROJECT DURATION AND REPLACE AS NEEDED IF DAMAGED. REFER TO SHEET AD103 FOR SUPPORTING PHOTOS.
22. REMOVE EXISTING STEEL GUARD RAILS, WIRE MESH SCREEN PANELS, AND ASSOCIATED MOUNTING HARDWARE IN THEIR ENTIRETY. PATCH / REPAIR CONCRETE TO MATCH ADJACENT SURFACES.
23. REMOVE EXISTING METAL GUARDRAIL IN ITS ENTIRETY. COORDINATE WITH CIVIL DRAWINGS.
24. REMOVE EXISTING DOWNSPOUT AND CAP DRAIN. COORDINATE WITH PLUMBING DRAWINGS.
25. REMOVE EXISTING CURTAINWALL SYSTEM IN ITS ENTIRETY. REFER TO SHEET AD103 FOR SUPPORTING PHOTOS.
26. REMOVE EXISTING FABRIC SCREEN INFILL AND ASSOCIATED ANCHORING / FASTENING HARDWARE. PATCH / REPAIR PCC TO MATCH ADJACENT SURFACE.
27. EXISTING ENTRANCE/EXIT SIGNS ON PRECAST PANEL ABOVE TO REMAIN.
28. EXISTING OVERHEAD HANGING CLEARANCE BAR SIGNAGE TO REMAIN. PROTECT DURING CONSTRUCTION . REMOVE, PROTECT AND STORE FOR LATER REINSTALLATION WHEN LEAVING IN PLACE RISKS DAMAGE DURING CONSTRUCTION PROCESSES.
29. EXISTING PEDESTRIAN CROSSING SIGNS TO REMAIN.

ISSUE FOR BID	08-09-2024
Revisions:	Date:

CONSULTANT

ARCHITECT/ENGINEER OF RECORD

BANCROFT ARCHITECTS + ENGINEERS

3300 Dundee Rd.
Northbrook, IL 60062
T: 847.952.9362
www.bancroft-ae.com

STAMP

LICENSED ARCHITECT CRISTIAN D. ZAVALIA 001-020855 5/31/25 STATE OF ILLINOIS

Office of Construction and Facilities Management

VA U.S. Department of Veterans Affairs

Drawing Title	ARCHITECTURAL- DEMOLITION PLAN - LEVEL 2
Phase	ISSUE FOR BID
Project Title	PARKING RAMP EXPANSION
Project Number	528-18-375
Building Number	29
Approved: Project Director	
Location	3495 BAILEY AVE., BUFFALO, NY 14215
Issue Date	08-09-2024
Checked	CZ
Drawn	II
Drawing Number	AD102

K:\CCG_PROJECTS\2021\21-113 - Parking Ramp (Buffalo, NY)\400- DesiDocs\402- Drawings\WORKING\21-113_AD102.dwg

6/14/2009 12:39:03 PM

VA FORM 08 - 6231

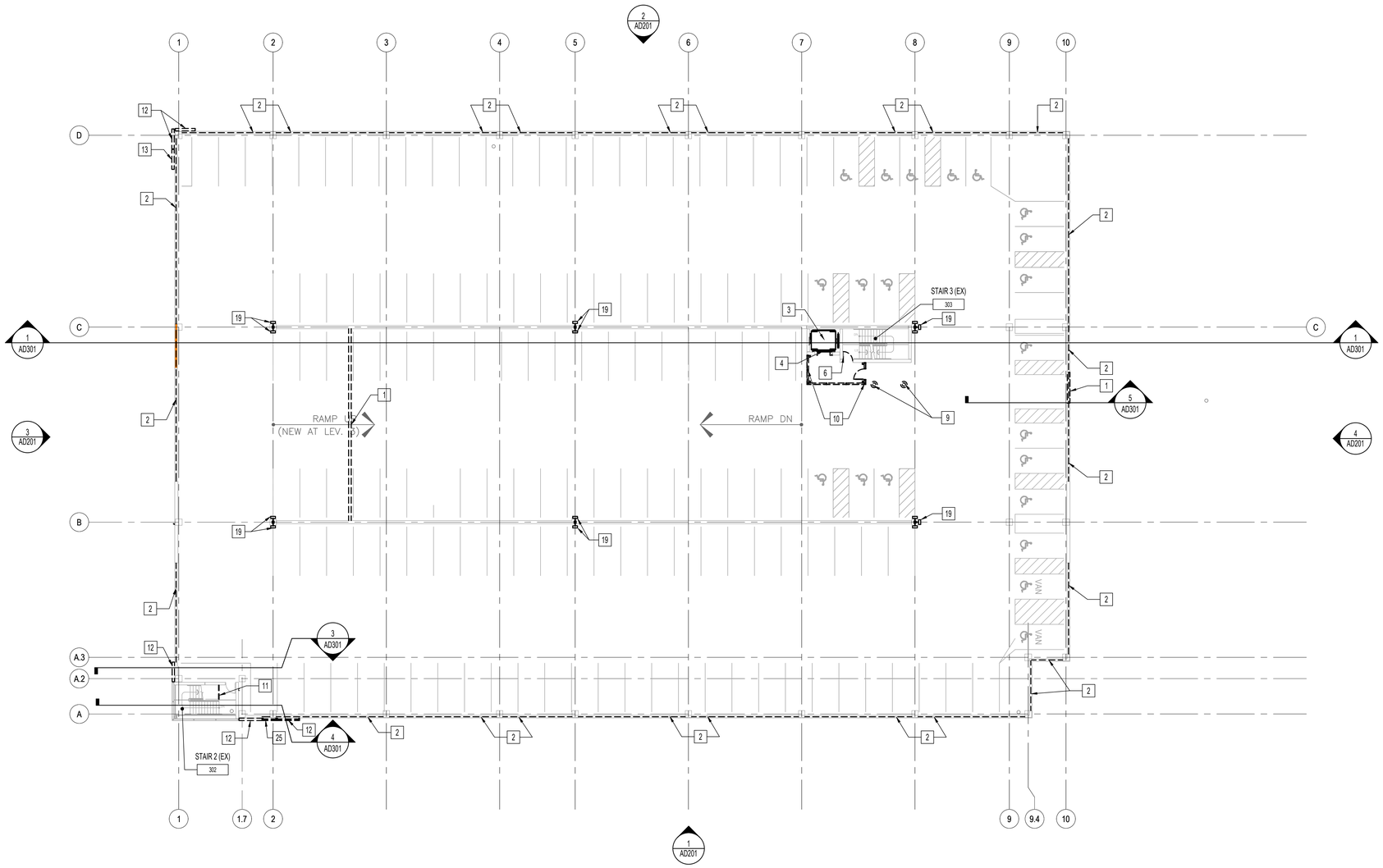

1 DEMOLTION PLAN - LEVEL 3
1/16"=1'-0"

DEMOLITION PLAN LEGEND

EXISTING CONSTRUCTION TO REMAIN

EXISTING DOOR TO BE REMOVED- REFER TO KEYNOTES

EXISTING CONSTRUCTION TO BE REMOVED IN ITS ENTIRETY, INCLUDING WALL SWITCHES, OUTLETS, THERMOSTATS, ETC. REFER TO ENLARGED PLANS FOR ADDITIONAL NOTES.

GENERAL DEMOLITION NOTES

A. REFER TO SHEET GI002 FOR BID DEDUCT ALTERNATE DESCRIPTIONS & GI003 FOR GENERAL DEMOLITION NOTES.

B. COORDINATE EXTENT OF DEMOLITION AREAS WITH NEW FLOOR PLANS & ASSOCIATED DISCIPLINE DRAWINGS.

C. REVIEW THIS DRAWING IN CONJUNCTION WITH CORRESPONDING STRUCTURAL, CIVIL, FIRE PROTECTION, PLUMBING, MECHANICAL AND ELECTRICAL DRAWINGS FOR FULL SCOPE OF DEMOLITION WORK.

D. ALL DIMENSIONS INDICATED FOR LENGTH OF WALL / PARTITION TO BE REMOVED IS APPROXIMATE AND SUBJECT TO ANY ADDITIONAL DEMOLITION NECESSARY TO PROPERLY SPLICE IN THE NEW WORK ASSEMBLY AND PROVIDE FOR DOOR UNIT INSTALLATION AS PER THE DETAILS.

E. SEAL / FIRESTOP ALL OPENINGS IN EXISTING SMOKE AND FIRE RATED PARTITIONS AND FIRE RATED FLOORS THAT ARE ENCOUNTERED DURING DEMOLITION. INCLUDES ALL EXPOSED CONDUIT AND PIPING.

F. CONSTRUCTION ACTIVITIES THAT CREATE DUST PARTICULATES, SUCH AS CUTTING, SAW CUTTING, PIPE AND DUCT CUTTING, ETC. SHALL BE KEPT WITHIN THE PERIMETER OF THE NEW WORK.

G. REPLACE / RESPRAY FIREPROOFING THAT HAS BEEN KNOCKED OFF BEAMS, COLUMNS, ETC. DURING DEMOLITION.

H. REFER TO STRUCTURAL RESTORATION DRAWINGS FOR ADDITIONAL DEMOLITION SCOPE.

I. REMOVE ALL EXISTING SIGNAGE THROUGHOUT GARAGE UNLESS NOTED OTHERWISE. ALL SIGNAGE SHALL BE RETURNED TO THE VA UNLESS DIRECTED OTHERWISE. COORDINATE ALL SIGNAGE SCOPE WITH NEW WORK. REFER TO WAYFINDING SHEETS (AW SERIES) FOR SCOPE OF NEW SIGNAGE.

X DEMOLITION PLAN KEY NOTES

* NOTE: NOT ALL NOTES MAY BE USED ON THIS SHEET

1. REMOVE PORTION OF EXISTING PRECAST CONCRETE WALL. COORDINATE EXTENTS WITH STRUCTURAL DRAWINGS.
2. REMOVE EXISTING STEEL RAILING AND MOUNTING HARDWARE IN ITS ENTIRETY- TYPICAL THROUGHOUT. PATCH AND REPAIR CONCRETE TO MATCH ADJACENT SURFACE. SEE PHOTOGRAPH AD101 FOR REFERENCE. DEDUCT ALTERNATE #6: EXISTING STEEL RAIL TO REMAIN. PROVIDE MESH FABRIC AT ALL PRECAST OPENINGS. SEE 5/A506.
3. REMOVE ELEVATOR ASSEMBLY AND ALL ASSOCIATED COMPONENTS IN ITS ENTIRETY.
4. REMOVE ELEVATOR DOOR, FRAME, THRESHOLD, PUSH-BUTTON CONTROLS ETC. IN ITS ENTIRETY. PREP ADJACENT SURFACES FOR INFILL- AS SHOWN IN NEW SCOPE OF WORK.
5. REMOVE ELEVATOR CONTROL EQUIPMENT IN ITS ENTIRETY. COORDINATE W/ ELECTRICAL DEMOLITION DRAWINGS.
6. REMOVE EXISTING DOOR PANEL & ASSOCIATED HARDWARE. EXISTING FRAME TO REMAIN UNLESS DAMAGED AND UNABLE TO RECEIVE NEW DOOR. SEE DOOR SCHEDULE FOR MORE INFORMATION.
7. SITE-RELATED DEMOLITION SHOWN FOR REFERENCE AND SCHEMATIC PURPOSES ONLY. COORDINATE EXACT EXTENTS OF DEMO WITH CIVIL DRAWINGS.
8. REMOVE EXISTING STOREFRONT FRAMING & GLAZING SYSTEM IN ITS ENTIRETY. PREP ADJACENT SURFACES FOR INFILL- AS SHOWN IN THE NEW SCOPE OF WORK.
9. REMOVE EXISTING BOLLARD AND ASSOCIATED ANCHORAGE. PATCH AND REPAIR CONCRETE TO MATCH ADJACENT SURFACE.
10. REMOVE EXISTING VESTIBULE ENCLOSURE ASSEMBLY IN ITS ENTIRETY. INCLUDING, BUT NOT LIMITED TO, CONCRETE KNEEWALLS, ALUMINUM STOREFRONT & GLAZING, STRUCTURAL STEEL, ROOFING, ETC. PATCH AND REPAIR CONCRETE SHAFTWALLS TO MATCH ADJACENT SURFACES.
11. REMOVE PORTION OF EXISTING TUBE STEEL GUARDRAIL. PATCH AND REPAIR CONCRETE SURFACE TO RECEIVE NEW. SEE DETAILS SHEET.
12. REMOVE SECTION OF EXISTING ALUM. ARCHITECTURAL SCREEN SYSTEM & ASSOCIATED STRUCTURAL STEEL SUPPORTS- COORDINATE EXTENT OF SCREEN REMOVAL WITH DEMOLITION ELEVATIONS. REFER TO SHEET AD103 FOR SUPPORTING PHOTOS. REPLACE ANY LOUVERS DUE TO DAMAGE DURING DEMOLITION / CONSTRUCTION.
13. REMOVE SECTION OF EXISTING CURTAINWALL SYSTEM & ASSOCIATED STRUCTURAL STEEL SUPPORTS- COORDINATE EXTENT OF REMOVAL TO NEAREST CLIP ANGLE & MAINTAIN COMPLETE FRAMING / GLAZING PANEL. REPLACE ANY FRAMES / PANELS DUE TO DAMAGE DURING DEMOLITION / CONSTRUCTION. REFER TO SHEET AD103 FOR SUPPORTING PHOTOS.
14. REMOVE EXISTING ROOF ASSEMBLY IN ITS ENTIRETY DOWN TO PRECAST SLAB. PREP SLAB TO RECEIVE NEW- COORDINATE WITH STRUCTURAL DRAWINGS.
15. REMOVE EXISTING MECHANICAL UNIT IN ITS ENTIRETY- COORDINATE WITH MECHANICAL DEMOLITION DRAWINGS.
16. REMOVE EXISTING ROOFING ASSEMBLY IN ITS ENTIRETY- COORDINATE WITH STRUCTURAL DRAWINGS.
17. REMOVE EXISTING VESTIBULE ROOFING ASSEMBLY IN ITS ENTIRETY. INCLUDING, BUT NOT LIMITED TO, STRUCTURAL STEEL FRAMING, DECKING, COPING, ETC.
18. REMOVE EXISTING DOOR & FRAME IN ITS ENTIRETY. PREP ADJACENT SURFACES TO RECEIVE NEW FRAME & DOOR- SEE HARDWARE SCHEDULE.
19. REMOVE EXISTING LIGHT POLE AND ANCHOR COMPONENTS. SCRAPE CLEAN THE TOP OF EXISTING PRECAST COLUMN IN PREPARATION FOR NEW WORK. COORDINATE WITH ELECTRICAL DRAWINGS.CONTRACTOR SHALL SALVAGE, PROTECT, AND STORE LIGHT POLES FOR REUSE AS PART OF DEDUCT ALTERNATE #3.
20. REMOVE EXISTING CANTILEVERED ALUMINUM SUNSHADE SYSTEM AND ASSOCIATED ANCHOR COMPONENTS. USE THIS EXISTING SUNSHADE LOUVER TO MATCH EXACTLY IN KIND THE NEW WORK. COORDINATE WITH PLANS, ELEVATIONS AND DETAILS.
21. EXISTING ALUMINUM ARCHITECTURAL SCREEN SYSTEM TO REMAIN. PROTECT THROUGHOUT PROJECT DURATION AND REPLACE AS NEEDED IF DAMAGED. REFER TO SHEET AD103 FOR SUPPORTING PHOTOS.
22. REMOVE EXISTING STEEL GUARD RAILS, WIRE MESH SCREEN PANELS, AND ASSOCIATED MOUNTING HARDWARE IN THEIR ENTIRETY. PATCH / REPAIR CONCRETE TO MATCH ADJACENT SURFACES.
23. REMOVE EXISTING METAL GUARDRAIL IN ITS ENTIRETY. COORDINATE WITH CIVIL DRAWINGS.
24. REMOVE EXISTING DOWNSPOUT AND CAP DRAIN. COORDINATE WITH PLUMBING DRAWINGS.
25. REMOVE EXISTING CURTAINWALL SYSTEM IN ITS ENTIRETY. REFER TO SHEET AD103 FOR SUPPORTING PHOTOS.
26. REMOVE EXISTING FABRIC SCREEN INFILL AND ASSOCIATED ANCHORING / FASTENING HARDWARE. PATCH / REPAIR PCC TO MATCH ADJACENT SURFACE.
27. EXISTING ENTRANCE/EXIT SIGNS ON PRECAST PANEL ABOVE TO REMAIN.
28. EXISTING OVERHEAD HANGING CLEARANCE BAR SIGNAGE TO REMAIN. PROTECT DURING CONSTRUCTION . REMOVE, PROTECT AND STORE FOR LATER REINSTALLATION WHEN LEAVING IN PLACE RISKS DAMAGE DURING CONSTRUCTION PROCESSES.
29. EXISTING PEDESTRIAN CROSSING SIGNS TO REMAIN.

2 SCREEN & GLAZING
NTS

3 SCREEN & GLAZING
NTS

4 SCREEN & GLAZING
NTS

5 SCREEN & GLAZING
NTS

ISSUE FOR BID	08-09-2024
Revisions:	Date:

CONSULTANT

ARCHITECT/ENGINEER OF RECORD

Bancroft
BANCROFT ARCHITECTS + ENGINEERS
3300 Dundee Rd.
Northbrook, IL 60062
T: 847.952.9362
www. bancroft-ae.com

STAMP

LICENSED ARCHITECT 5-8-24 CZAPLINA D. CZAPLINA NO. 001-021855 STATE OF ILLINOIS

Office of Construction and Facilities Management

VA U.S. Department of Veterans Affairs

Drawing Title	ARCHITECTURAL- DEMOLITION PLAN - LEVEL 3
Phase	ISSUE FOR BID
Project Title	PARKING RAMP EXPANSION
Project Number	528-18-375
Building Number	29
Approved: Project Director	
Location	3495 BAILEY AVE., BUFFALO, NY 14215
Issue Date	08-09-2024
Checked	CZ
Drawn	II
Drawing Number	AD103

VA FORM 08 - 6231

K:\CCO_PROJECTS\2021\21-113 - Parking Ramp (Buffalo, NY)\400- Des\Docs\400- Drawings\WORKING\21-113_AD103.dwg
6/14/2099 12:39:03 PM

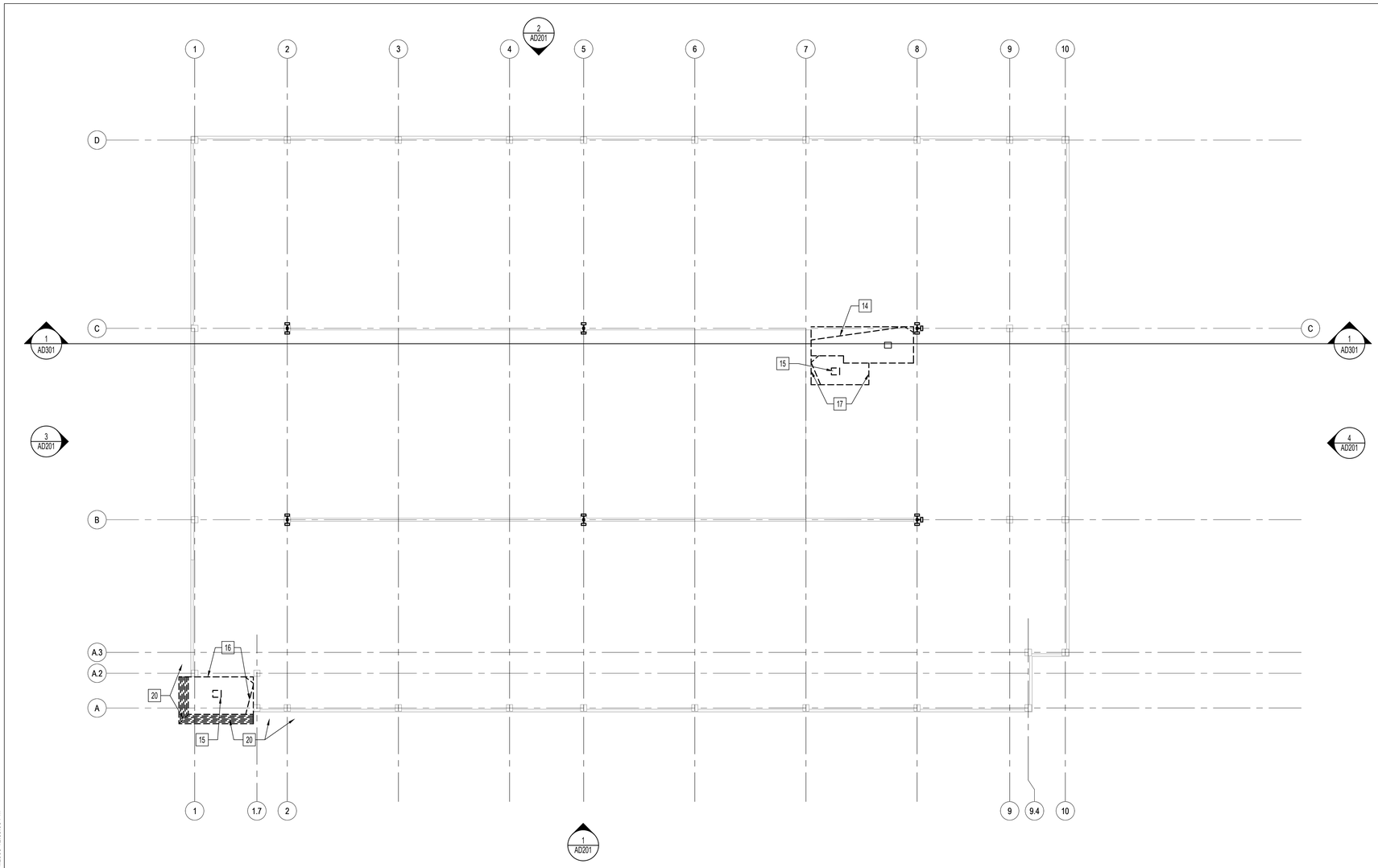

N

1 DEMOLITION PLAN - EXISTING ROOF

1/16"=1'-0"

0 4" 8" 16" 32"

DEMOLITION PLAN LEGEND

EXISTING CONSTRUCTION TO REMAIN

EXISTING DOOR TO BE REMOVED- REFER TO KEYNOTES

EXISTING CONSTRUCTION TO BE REMOVED IN ITS ENTIRETY, INCLUDING WALL SWITCHES, OUTLETS, THERMOSTATS, ETC. REFER TO ENLARGED PLANS FOR ADDITIONAL NOTES.

GENERAL DEMOLITION NOTES

A. REFER TO SHEET GI002 FOR BID DEDUCT ALTERNATE DESCRIPTIONS & GI003 FOR GENERAL DEMOLITION NOTES.

B. COORDINATE EXTENT OF DEMOLITION AREAS WITH NEW FLOOR PLANS & ASSOCIATED DISCIPLINE DRAWINGS.

C. REVIEW THIS DRAWING IN CONJUNCTION WITH CORRESPONDING STRUCTURAL, CIVIL, FIRE PROTECTION, PLUMBING, MECHANICAL AND ELECTRICAL DRAWINGS FOR FULL SCOPE OF DEMOLITION WORK.

D. ALL DIMENSIONS INDICATED FOR LENGTH OF WALL / PARTITION TO BE REMOVED IS APPROXIMATE AND SUBJECT TO ANY ADDITIONAL DEMOLITION NECESSARY TO PROPERLY SPLICE IN THE NEW WORK ASSEMBLY AND PROVIDE FOR DOOR UNIT INSTALLATION AS PER THE DETAILS.

E. SEAL / FIRESTOP ALL OPENINGS IN EXISTING SMOKE AND FIRE RATED PARTITIONS AND FIRE RATED FLOORS THAT ARE ENCOUNTERED DURING DEMOLITION. INCLUDES ALL EXPOSED CONDUIT AND PIPING.

F. CONSTRUCTION ACTIVITIES THAT CREATE DUST PARTICULATES, SUCH AS CUTTING, SAW CUTTING, PIPE AND DUCT CUTTING, ETC. SHALL BE KEPT WITHIN THE PERIMETER OF THE NEW WORK.

G. REPLACE / RESPRAY FIREPROOFING THAT HAS BEEN KNOCKED OFF BEAMS, COLUMNS, ETC. DURING DEMOLITION.

H. REFER TO STRUCTURAL RESTORATION DRAWINGS FOR ADDITIONAL DEMOLITION SCOPE.

I. REMOVE ALL EXISTING SIGNAGE THROUGHOUT GARAGE UNLESS NOTED OTHERWISE. ALL SIGNAGE SHALL BE RETURNED TO THE VA UNLESS DIRECTED OTHERWISE. COORDINATE ALL SIGNAGE SCOPE WITH NEW WORK. REFER TO WAYFINDING SHEETS (AW SERIES) FOR SCOPE OF NEW SIGNAGE.

X DEMOLITION PLAN KEY NOTES

* NOTE: NOT ALL NOTES MAY BE USED ON THIS SHEET

1. REMOVE PORTION OF EXISTING PRECAST CONCRETE WALL. COORDINATE EXTENTS WITH STRUCTURAL DRAWINGS.
2. REMOVE EXISTING STEEL RAILING AND MOUNTING HARDWARE IN ITS ENTIRETY- TYPICAL THROUGHOUT. PATCH AND REPAIR CONCRETE TO MATCH ADJACENT SURFACE. SEE PHOTOGRAPH AD101 FOR REFERENCE. DEDUCT ALTERNATE #6: EXISTING STEEL RAIL TO REMAIN. PROVIDE MESH FABRIC AT ALL PRECAST OPENINGS. SEE 5/A506.
3. REMOVE ELEVATOR ASSEMBLY AND ALL ASSOCIATED COMPONENTS IN ITS ENTIRETY.
4. REMOVE ELEVATOR DOOR, FRAME, THRESHOLD, PUSH-BUTTON CONTROLS ETC. IN ITS ENTIRETY. PREP ADJACENT SURFACES FOR INFILL- AS SHOWN IN NEW SCOPE OF WORK.
5. REMOVE ELEVATOR CONTROL EQUIPMENT IN ITS ENTIRETY. COORDINATE W/ ELECTRICAL DEMOLITION DRAWINGS.
6. REMOVE EXISTING DOOR PANEL & ASSOCIATED HARDWARE. EXISTING FRAME TO REMAIN UNLESS DAMAGED AND UNABLE TO RECEIVE NEW DOOR. SEE DOOR SCHEDULE FOR MORE INFORMATION.
7. SITE-RELATED DEMOLITION SHOWN FOR REFERENCE AND SCHEMATIC PURPOSES ONLY. COORDINATE EXACT EXTENTS OF DEMO WITH CIVIL DRAWINGS.
8. REMOVE EXISTING STOREFRONT FRAMING & GLAZING SYSTEM IN ITS ENTIRETY. PREP ADJACENT SURFACES FOR INFILL- AS SHOWN IN THE NEW SCOPE OF WORK.
9. REMOVE EXISTING BOLLARD AND ASSOCIATED ANCHORAGE. PATCH AND REPAIR CONCRETE TO MATCH ADJACENT SURFACE.
10. REMOVE EXISTING VESTIBULE ENCLOSURE ASSEMBLY IN ITS ENTIRETY. INCLUDING, BUT NOT LIMITED TO, CONCRETE KNEEWALLS, ALUMINUM STOREFRONT & GLAZING, STRUCTURAL STEEL, ROOFING, ETC. PATCH AND REPAIR CONCRETE SHAFTWALLS TO MATCH ADJACENT SURFACES.
11. REMOVE PORTION OF EXISTING TUBE STEEL GUARDRAIL. PATCH AND REPAIR CONCRETE SURFACE TO RECEIVE NEW. SEE DETAILS SHEET.
12. REMOVE SECTION OF EXISTING ALUM. ARCHITECTURAL SCREEN SYSTEM & ASSOCIATED STRUCTURAL STEEL SUPPORTS- COORDINATE EXTENT OF SCREEN REMOVAL WITH DEMOLITION ELEVATIONS. REFER TO SHEET AD103 FOR SUPPORTING PHOTOS. REPLACE ANY LOUVERS DUE TO DAMAGE DURING DEMOLITION / CONSTRUCTION.
13. REMOVE SECTION OF EXISTING CURTAINWALL SYSTEM & ASSOCIATED STRUCTURAL STEEL SUPPORTS- COORDINATE EXTENT OF REMOVAL TO NEAREST CLIP ANGLE & MAINTAIN COMPLETE FRAMING / GLAZING PANEL. REPLACE ANY FRAMES / PANELS DUE TO DAMAGE DURING DEMOLITION / CONSTRUCTION. REFER TO SHEET AD103 FOR SUPPORTING PHOTOS.
14. REMOVE EXISTING ROOF ASSEMBLY IN ITS ENTIRETY DOWN TO PRECAST SLAB. PREP SLAB TO RECEIVE NEW- COORDINATE WITH STRUCTURAL DRAWINGS.
15. REMOVE EXISTING MECHANICAL UNIT IN ITS ENTIRETY- COORDINATE WITH MECHANICAL DEMOLITION DRAWINGS.
16. REMOVE EXISTING ROOFING ASSEMBLY IN ITS ENTIRETY- COORDINATE WITH STRUCTURAL DRAWINGS.
17. REMOVE EXISTING VESTIBULE ROOFING ASSEMBLY IN ITS ENTIRETY. INCLUDING, BUT NOT LIMITED TO, STRUCTURAL STEEL FRAMING, DECKING, COPING, ETC.
18. REMOVE EXISTING DOOR & FRAME IN ITS ENTIRETY. PREP ADJACENT SURFACES TO RECEIVE NEW FRAME & DOOR- SEE HARDWARE SCHEDULE.
19. REMOVE EXISTING LIGHT POLE AND ANCHOR COMPONENTS. SCRAPE CLEAN THE TOP OF EXISTING PRECAST COLUMN IN PREPARATION FOR NEW WORK. COORDINATE WITH ELECTRICAL DRAWINGS.CONTRACTOR SHALL SALVAGE, PROTECT, AND STORE LIGHT POLES FOR REUSE AS PART OF DEDUCT ALTERNATE #3.
20. REMOVE EXISTING CANTILEVERED ALUMINUM SUNSHADE SYSTEM AND ASSOCIATED ANCHOR COMPONENTS. USE THIS EXISTING SUNSHADE LOUVER TO MATCH EXACTLY IN KIND THE NEW WORK. COORDINATE WITH PLANS, ELEVATIONS AND DETAILS.
21. EXISTING ALUMINUM ARCHITECTURAL SCREEN SYSTEM TO REMAIN. PROTECT THROUGHOUT PROJECT DURATION AND REPLACE AS NEEDED IF DAMAGED. REFER TO SHEET AD103 FOR SUPPORTING PHOTOS.
22. REMOVE EXISTING STEEL GUARD RAILS, WIRE MESH SCREEN PANELS, AND ASSOCIATED MOUNTING HARDWARE IN THEIR ENTIRETY. PATCH / REPAIR CONCRETE TO MATCH ADJACENT SURFACES.
23. REMOVE EXISTING METAL GUARDRAIL IN ITS ENTIRETY. COORDINATE WITH CIVIL DRAWINGS.
24. REMOVE EXISTING DOWNSPOUT AND CAP DRAIN. COORDINATE WITH PLUMBING DRAWINGS.
25. REMOVE EXISTING CURTAINWALL SYSTEM IN ITS ENTIRETY. REFER TO SHEET AD103 FOR SUPPORTING PHOTOS.
26. REMOVE EXISTING FABRIC SCREEN INFILL AND ASSOCIATED ANCHORING / FASTENING HARDWARE. PATCH / REPAIR PCC TO MATCH ADJACENT SURFACE.
27. EXISTING ENTRANCE/EXIT SIGNS ON PRECAST PANEL ABOVE TO REMAIN.
28. EXISTING OVERHEAD HANGING CLEARANCE BAR SIGNAGE TO REMAIN. PROTECT DURING CONSTRUCTION . REMOVE, PROTECT AND STORE FOR LATER REINSTALLATION WHEN LEAVING IN PLACE RISKS DAMAGE DURING CONSTRUCTION PROCESSES.
29. EXISTING PEDESTRIAN CROSSING SIGNS TO REMAIN.

ISSUE FOR BID	08-09-2024
Revisions:	Date:

CONSULTANT

ARCHITECT/ENGINEER OF RECORD

BANCROFT ARCHITECTS + ENGINEERS
3300 Dundee Rd.
Northbrook, IL 60062
T: 847.952.9362
www.bancroft-ae.com

STAMP

LICENSED ARCHITECT CRISTIAN D. CANAVILA No. 001-020655 STATE OF ILLINOIS 5/31/24

Office of Construction and Facilities Management

VA U.S. Department of Veterans Affairs

Drawing Title: ARCHITECTURAL- DEMOLITION PLAN - EXISTING ROOF	Phase: ISSUE FOR BID	Project Title: PARKING RAMP EXPANSION	Project Number: 528-18-375
			Building Number: 29
Approved: Project Director		Location: 3495 BAILEY AVE., BUFFALO, NY 14215	Drawing Number: AD104
		Issue Date: 08-09-2024 / Checked: CZ / Drawn: II	

K:\CCG_PROJECTS\2021\21-113 - Parking Ramp (Buffalo, NY)\400- Des\Docs\402- Drawings\WORKING\21-113_AD104.dwg
6/14/2209 12:39:03 PM

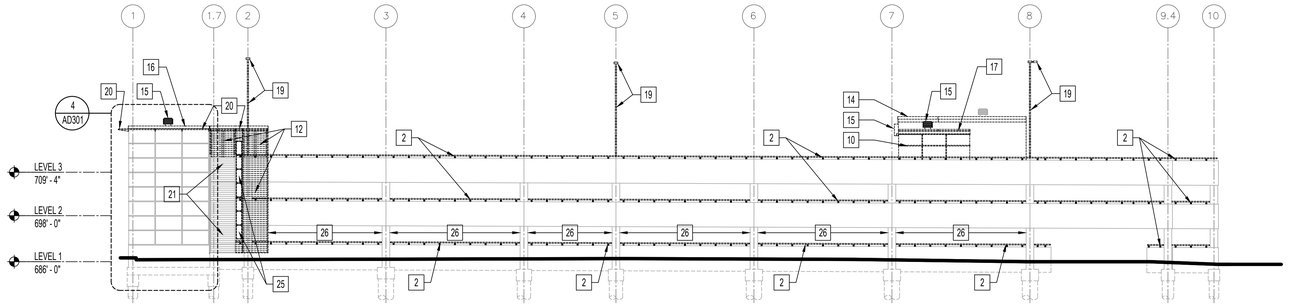

1 DEMOLITION ELEVATION SOUTH
1/16"=1'-0"

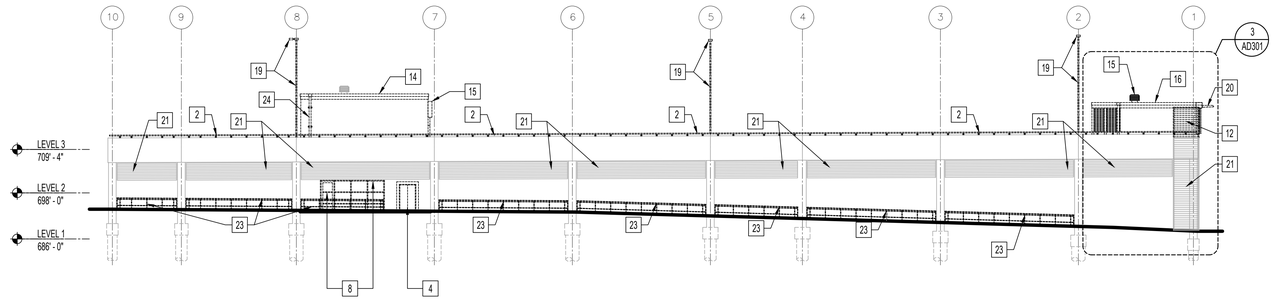

2 DEMOLITION ELEVATION NORTH
1/16"=1'-0"

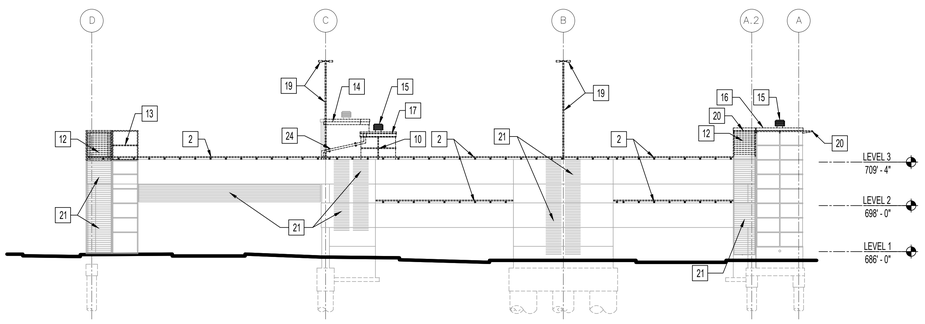

3 DEMOLITION ELEVATION WEST
1/16"=1'-0"

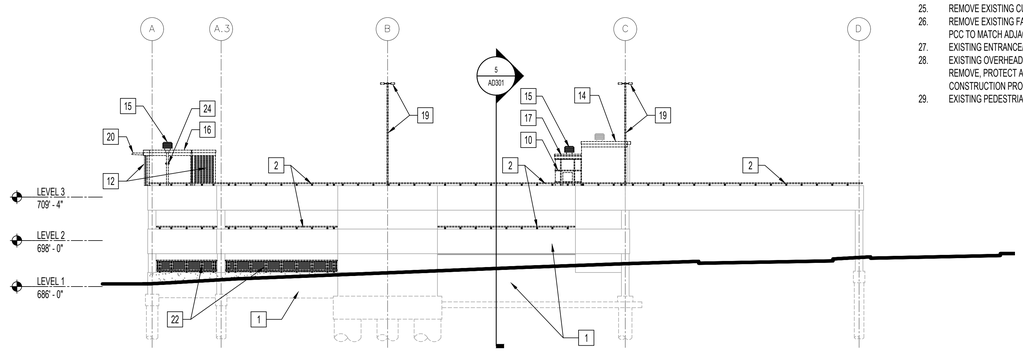

4 DEMOLTION ELEVATION EAST
1/16"=1'-0"

DEMOLITION ELEVATION LEGEND

EXISTING CONSTRUCTION TO REMAIN

EXISTING CONSTRUCTION TO BE REMOVED IN ITS ENTIRETY, INCLUDING WALL SWITCHES, OUTLETS, THERMOSTATS, ETC. REFER TO ENLARGED PLANS FOR ADDITIONAL NOTES. COORDINATE ACROSS ALL DISCIPLINES.

GENERAL DEMOLITION ELEVATION NOTES

A. REFER TO SHEET GI002 FOR BID DEDUCT ALTERNATE DESCRIPTIONS & GI003 FOR GENERAL DEMOLITION NOTES.

B. COORDINATE EXTENT OF DEMOLITION AREAS WITH NEW FLOOR PLANS & ASSOCIATED DISCIPLINE DRAWINGS.

C. REVIEW THIS DRAWING IN CONJUNCTION WITH CORRESPONDING STRUCTURAL, HAZARDOUS MATERIAL, FIRE PROTECTION, PLUMBING, MECHANICAL AND ELECTRICAL DRAWINGS FOR FULL SCOPE OF DEMOLITION WORK.

D. ALL DIMENSIONS INDICATED FOR LENGTH OF WALL / PARTITION TO BE REMOVED IS APPROXIMATE AND SUBJECT TO ANY ADDITIONAL DEMOLITION NECESSARY TO ACCOMMODATE NEW WORK ASSEMBLY. COORDINATE WITH STRUCTURAL DRAWINGS.

E. SEAL / FIRESTOP ALL OPENINGS IN EXISTING SMOKE AND FIRE RATED PARTITIONS AND FIRE RATED FLOORS THAT ARE ENCOUNTERED DURING DEMOLITION. INCLUDES ALL EXPOSED CONDUIT AND PIPING.

F. CONSTRUCTION ACTIVITIES THAT CREATE DUST PARTICULATES, SUCH AS CUTTING, SAW CUTTING, PIPE AND DUCT CUTTING, ETC. SHALL BE KEPT WITHIN THE PERIMETER OF THE NEW WORK.

G. REPLACE / RE-SPRAY FIREPROOFING THAT HAS BEEN KNOCKED OFF BEAMS, COLUMNS, ETC. DURING DEMOLITION.

X DEMOLITION ELEVATION KEY NOTES

* NOTE: NOT ALL NOTES MAY BE USED ON THIS SHEET

1. REMOVE PORTION OF EXISTING PRECAST CONCRETE WALL. COORDINATE EXTENTS WITH STRUCTURAL DRAWINGS.
2. REMOVE EXISTING STEEL RAILING AND MOUNTING HARDWARE IN ITS ENTIRETY- TYPICAL THROUGHOUT. PATCH AND REPAIR CONCRETE TO MATCH ADJACENT SURFACE. SEE PHOTOGRAPH AD101 FOR REFERENCE. DEDUCT ALTERNATE #6: EXISTING STEEL RAIL TO REMAIN. PROVIDE MESH FABRIC AT ALL PRECAST OPENINGS. SEE 5/A506.
3. REMOVE ELEVATOR ASSEMBLY AND ALL ASSOCIATED COMPONENTS IN ITS ENTIRETY.
4. REMOVE ELEVATOR DOOR, FRAME, THRESHOLD, PUSH-BUTTON CONTROLS ETC. IN ITS ENTIRETY. PREP ADJACENT SURFACES FOR INFILL- AS SHOWN IN NEW SCOPE OF WORK.
5. REMOVE ELEVATOR CONTROL EQUIPMENT IN ITS ENTIRETY. COORDINATE W/ ELECTRICAL DEMOLITION DRAWINGS.
6. REMOVE EXISTING DOOR PANEL & ASSOCIATED HARDWARE. EXISTING FRAME TO REMAIN UNLESS DAMAGED AND UNABLE TO RECEIVE NEW DOOR. SEE DOOR SCHEDULE FOR MORE INFORMATION.
7. SITE-RELATED DEMOLITION SHOWN FOR REFERENCE AND SCHEMATIC PURPOSES ONLY. COORDINATE EXACT EXTENTS OF DEMO WITH CIVIL DRAWINGS.
8. REMOVE EXISTING STOREFRONT FRAMING & GLAZING SYSTEM IN ITS ENTIRETY. PREP ADJACENT SURFACES FOR INFILL- AS SHOWN IN THE NEW SCOPE OF WORK.
9. REMOVE EXISTING BOLLARD AND ASSOCIATED ANCHORAGE. PATCH AND REPAIR CONCRETE TO MATCH ADJACENT SURFACE.
10. REMOVE EXISTING VESTIBULE ENCLOSURE ASSEMBLY IN ITS ENTIRETY. INCLUDING, BUT NOT LIMITED TO, CONCRETE KNEEWALLS, ALUMINUM STOREFRONT & GLAZING, STRUCTURAL STEEL, ROOFING, ETC. PATCH AND REPAIR CONCRETE SHAFTWALLS TO MATCH ADJACENT SURFACES.
11. REMOVE PORTION OF EXISTING TUBE STEEL GUARDRAIL. PATCH AND REPAIR CONCRETE SURFACE TO RECEIVE NEW. SEE DETAILS SHEET.
12. REMOVE SECTION OF EXISTING ALUM. ARCHITECTURAL SCREEN SYSTEM & ASSOCIATED STRUCTURAL STEEL SUPPORTS- COORDINATE EXTENT OF SCREEN REMOVAL WITH DEMOLITION ELEVATIONS. REFER TO SHEET AD103 FOR SUPPORTING PHOTOS. REPLACE ANY LOUVERS DUE TO DAMAGE DURING DEMOLITION / CONSTRUCTION.
13. REMOVE SECTION OF EXISTING CURTAINWALL SYSTEM & ASSOCIATED STRUCTURAL STEEL SUPPORTS- COORDINATE EXTENT OF REMOVAL TO NEAREST CLIP ANGLE & MAINTAIN COMPLETE FRAMING / GLAZING PANEL. REPLACE ANY FRAMES / PANELS DUE TO DAMAGE DURING DEMOLITION / CONSTRUCTION. REFER TO SHEET AD103 FOR SUPPORTING PHOTOS.
14. REMOVE EXISTING ROOF ASSEMBLY IN ITS ENTIRETY DOWN TO PRECAST SLAB. PREP SLAB TO RECEIVE NEW- COORDINATE WITH STRUCTURAL DRAWINGS.
15. REMOVE EXISTING MECHANICAL UNIT IN ITS ENTIRETY- COORDINATE WITH MECHANICAL DEMOLITION DRAWINGS.
16. REMOVE EXISTING ROOFING ASSEMBLY IN ITS ENTIRETY- COORDINATE WITH STRUCTURAL DRAWINGS.
17. REMOVE EXISTING VESTIBULE ROOFING ASSEMBLY IN ITS ENTIRETY. INCLUDING, BUT NOT LIMITED TO, STRUCTURAL STEEL FRAMING, DECKING, COPING, ETC.
18. REMOVE EXISTING DOOR & FRAME IN ITS ENTIRETY. PREP ADJACENT SURFACES TO RECEIVE NEW FRAME & DOOR- SEE HARDWARE SCHEDULE.
19. REMOVE EXISTING LIGHT POLE AND ANCHOR COMPONENTS. SCRAPE CLEAN THE TOP OF EXISTING PRECAST COLUMN IN PREPARATION FOR NEW WORK. COORDINATE WITH ELECTRICAL DRAWINGS.CONTRACTOR SHALL SALVAGE, PROTECT, AND STORE LIGHT POLES FOR REUSE AS PART OF DEDUCT ALTERNATE #3.
20. REMOVE EXISTING CANTILEVERED ALUMINUM SUNSHADE SYSTEM AND ASSOCIATED ANCHOR COMPONENTS. USE THIS EXISTING SUNSHADE LOUVER TO MATCH EXACTLY IN KIND THE NEW WORK. COORDINATE WITH PLANS, ELEVATIONS AND DETAILS.
21. EXISTING ALUMINUM ARCHITECTURAL SCREEN SYSTEM TO REMAIN. PROTECT THROUGHOUT PROJECT DURATION AND REPLACE AS NEEDED IF DAMAGED. REFER TO SHEET AD103 FOR SUPPORTING PHOTOS.
22. REMOVE EXISTING STEEL GUARD RAILS, WIRE MESH SCREEN PANELS, AND ASSOCIATED MOUNTING HARDWARE IN THEIR ENTIRETY. PATCH / REPAIR CONCRETE TO MATCH ADJACENT SURFACES.
23. REMOVE EXISTING METAL GUARDRAIL IN ITS ENTIRETY. COORDINATE WITH CIVIL DRAWINGS.
24. REMOVE EXISTING DOWNSPOUT AND CAP DRAIN. COORDINATE WITH PLUMBING DRAWINGS.
25. REMOVE EXISTING CURTAINWALL SYSTEM IN ITS ENTIRETY. REFER TO SHEET AD103 FOR SUPPORTING PHOTOS.
26. REMOVE EXISTING FABRIC SCREEN INFILL AND ASSOCIATED ANCHORING / FASTENING HARDWARE. PATCH / REPAIR PCC TO MATCH ADJACENT SURFACE.
27. EXISTING ENTRANCE/EXIT SIGNS ON PRECAST PANEL ABOVE TO REMAIN.
28. EXISTING OVERHEAD HANGING CLEARANCE BAR SIGNAGE TO REMAIN. PROTECT DURING CONSTRUCTION . REMOVE, PROTECT AND STORE FOR LATER REINSTALLATION WHEN LEAVING IN PLACE RISKS DAMAGE DURING CONSTRUCTION PROCESSES.
29. EXISTING PEDESTRIAN CROSSING SIGNS TO REMAIN.

ISSUE FOR BID	08-09-2024
Revisions:	Date:

CONSULTANT

ARCHITECT/ENGINEER OF RECORD

BANCROFT ARCHITECTS + ENGINEERS
3300 Dundee Rd.
Northbrook, IL 60062
T: 847.952.9362
www. bancroft-ae.com

STAMP

LICENSED ARCHITECT 5914 CHERYL D. ZAKARIJA 08/31/2025 STATE OF ILLINOIS

Office of Construction and Facilities Management

VA U.S. Department of Veterans Affairs

Drawing Title: ARCHITECTURAL- DEMOLITION ELEVATIONS

Phase: ISSUE FOR BID

Approved: Project Director

Project Title: PARKING RAMP EXPANSION

Location: 3495 BAILEY AVE., BUFFALO, NY 14215

Issue Date: 08-09-2024 | Checked: CZ | Drawn: II

Project Number: 528-18-375

Building Number: 29

Drawing Number: AD201

K:\CCG_PROJECTS\2021\21-113 - Parking Ramp (Buffalo, NY)\40- Des\Docs\402- Drawings\WORKING\21-113_AD201.dwg
6/14/2009 12:39:03 PM

VA FORM 08 - 6231

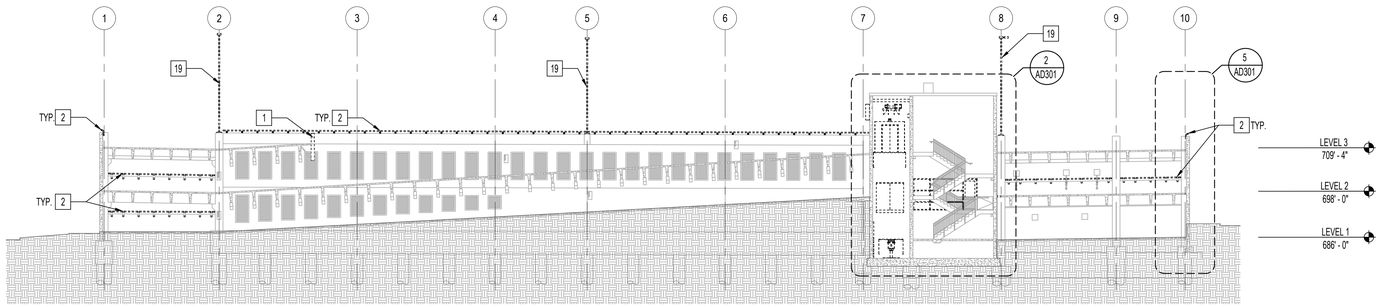

1 DEMOLITION BUILDING SECTION

1/16"=1'-0"

0 4' 8' 16' 32'

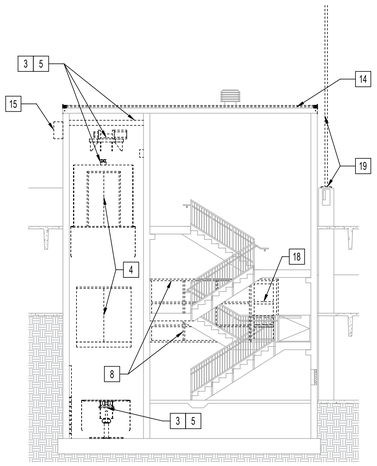

2 DEMOLITION PARTIAL BUILDING SECTION

1/8"=1'-0"

0 2' 4' 8' 16'

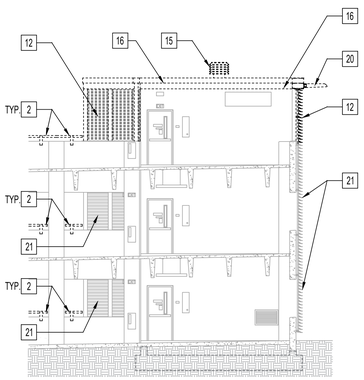

3 DEMOLITION PARTIAL BUILDING SECTION

1/8"=1'-0"

0 2' 4' 8' 16'

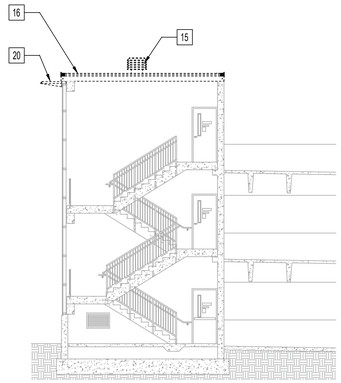

4 DEMOLITION PARTIAL BUILDING SECTION

1/8"=1'-0"

0 2' 4' 8' 16'

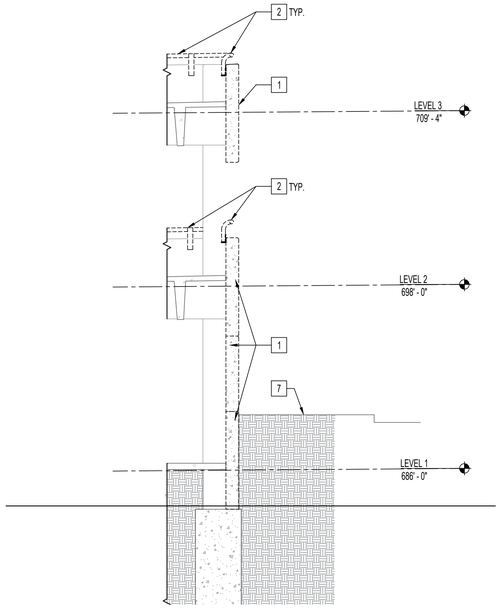

5 DEMOLITION WALL SECTION

1/4"=1'-0"

0 1' 2' 4' 8'

DEMOLITION SECTION LEGEND

EXISTING CONSTRUCTION TO REMAIN

EXISTING CONSTRUCTION TO BE REMOVED IN ITS ENTIRETY, INCLUDING WALL SWITCHES, OUTLETS, THERMOSTATS, ETC. REFER TO ENLARGED PLANS FOR ADDITIONAL NOTES. COORDINATE ACROSS ALL DISCIPLINES.

GENERAL DEMOLITION SECTION NOTES

A. REFER TO SHEET GI002 FOR BID DEDUCT ALTERNATE DESCRIPTIONS & GI003 FOR GENERAL DEMOLITION NOTES.

B. COORDINATE EXTENT OF DEMOLITION AREAS WITH NEW FLOOR PLANS & ASSOCIATED DISCIPLINE DRAWINGS.

C. REVIEW THIS DRAWING IN CONJUNCTION WITH CORRESPONDING STRUCTURAL, HAZARDOUS MATERIAL, FIRE PROTECTION, PLUMBING, MECHANICAL AND ELECTRICAL DRAWINGS FOR FULL SCOPE OF DEMOLITION WORK.

D. ALL DIMENSIONS INDICATED FOR LENGTH OF WALL / PARTITION TO BE REMOVED IS APPROXIMATE AND SUBJECT TO ANY ADDITIONAL DEMOLITION NECESSARY TO PROPERLY SPLICE IN THE NEW WORK ASSEMBLY AND PROVIDE FOR DOOR UNIT INSTALLATION AS PER THE DETAILS.

E. SEAL / FIRESTOP ALL OPENINGS IN EXISTING SMOKE AND FIRE RATED PARTITIONS AND FIRE RATED FLOORS THAT ARE ENCOUNTERED DURING DEMOLITION. INCLUDES ALL EXPOSED CONDUIT AND PIPING.

F. CONSTRUCTION ACTIVITIES THAT CREATE DUST PARTICULATES, SUCH AS CUTTING, SAW CUTTING, PIPE AND DUCT CUTTING, ETC. SHALL BE KEPT WITHIN THE PERIMETER OF THE NEW WORK.

G. REPLACE / RESPRAY FIREPROOFING THAT HAS BEEN KNOCKED OFF BEAMS, COLUMNS, ETC. DURING DEMOLITION.

X DEMOLITION SECTION KEY NOTES

* NOTE: NOT ALL NOTES MAY BE USED ON THIS SHEET

1. REMOVE PORTION OF EXISTING PRECAST CONCRETE WALL. COORDINATE EXTENTS WITH STRUCTURAL DRAWINGS.
2. REMOVE EXISTING STEEL RAILING AND MOUNTING HARDWARE IN ITS ENTIRETY- TYPICAL THROUGHOUT. PATCH AND REPAIR CONCRETE TO MATCH ADJACENT SURFACE. SEE PHOTOGRAPH AD101 FOR REFERENCE. DEDUCT ALTERNATE #6: EXISTING STEEL RAIL TO REMAIN. PROVIDE MESH FABRIC AT ALL PRECAST OPENINGS. SEE 5/A506.
3. REMOVE ELEVATOR ASSEMBLY AND ALL ASSOCIATED COMPONENTS IN ITS ENTIRETY.
4. REMOVE ELEVATOR DOOR, FRAME, THRESHOLD, PUSH-BUTTON CONTROLS ETC. IN ITS ENTIRETY. PREP ADJACENT SURFACES FOR INFILL- AS SHOWN IN NEW SCOPE OF WORK.
5. REMOVE ELEVATOR CONTROL EQUIPMENT IN ITS ENTIRETY. COORDINATE W/ ELECTRICAL DEMOLITION DRAWINGS.
6. REMOVE EXISTING DOOR PANEL & ASSOCIATED HARDWARE. EXISTING FRAME TO REMAIN UNLESS DAMAGED AND UNABLE TO RECEIVE NEW DOOR. SEE DOOR SCHEDULE FOR MORE INFORMATION.
7. SITE-RELATED DEMOLITION SHOWN FOR REFERENCE AND SCHEMATIC PURPOSES ONLY. COORDINATE EXACT EXTENTS OF DEMO WITH CIVIL DRAWINGS.
8. REMOVE EXISTING STOREFRONT FRAMING & GLAZING SYSTEM IN ITS ENTIRETY. PREP ADJACENT SURFACES FOR INFILL- AS SHOWN IN THE NEW SCOPE OF WORK.
9. REMOVE EXISTING BOLLARD AND ASSOCIATED ANCHORAGE. PATCH AND REPAIR CONCRETE TO MATCH ADJACENT SURFACE.
10. REMOVE EXISTING VESTIBULE ENCLOSURE ASSEMBLY IN ITS ENTIRETY. INCLUDING, BUT NOT LIMITED TO, CONCRETE KNEEWALLS, ALUMINUM STOREFRONT & GLAZING. STRUCTURAL STEEL, ROOFING, ETC. PATCH AND REPAIR CONCRETE SHAFTWALLS TO MATCH ADJACENT SURFACES.
11. REMOVE PORTION OF EXISTING TUBE STEEL GUARDRAIL. PATCH AND REPAIR CONCRETE SURFACE TO RECEIVE NEW. SEE DETAILS SHEET.
12. REMOVE SECTION OF EXISTING ALUM. ARCHITECTURAL SCREEN SYSTEM & ASSOCIATED STRUCTURAL STEEL SUPPORTS- COORDINATE EXTENT OF SCREEN REMOVAL WITH DEMOLITION ELEVATIONS. REFER TO SHEET AD103 FOR SUPPORTING PHOTOS. REPLACE ANY LOUVERS DUE TO DAMAGE DURING DEMOLITION / CONSTRUCTION.
13. REMOVE SECTION OF EXISTING CURTAINWALL SYSTEM & ASSOCIATED STRUCTURAL STEEL SUPPORTS- COORDINATE EXTENT OF REMOVAL TO NEAREST CLIP ANGLE & MAINTAIN COMPLETE FRAMING / GLAZING PANEL. REPLACE ANY FRAMES / PANELS DUE TO DAMAGE DURING DEMOLITION / CONSTRUCTION. REFER TO SHEET AD103 FOR SUPPORTING PHOTOS.
14. REMOVE EXISTING ROOF ASSEMBLY IN ITS ENTIRETY DOWN TO PRECAST SLAB. PREP SLAB TO RECEIVE NEW- COORDINATE WITH STRUCTURAL DRAWINGS.
15. REMOVE EXISTING MECHANICAL UNIT IN ITS ENTIRETY- COORDINATE WITH MECHANICAL DEMOLITION DRAWINGS.
16. REMOVE EXISTING ROOFING ASSEMBLY IN ITS ENTIRETY- COORDINATE WITH STRUCTURAL DRAWINGS.
17. REMOVE EXISTING VESTIBULE ROOFING ASSEMBLY IN ITS ENTIRETY. INCLUDING, BUT NOT LIMITED TO, STRUCTURAL STEEL FRAMING, DECKING, COPING, ETC.
18. REMOVE EXISTING DOOR & FRAME IN ITS ENTIRETY. PREP ADJACENT SURFACES TO RECEIVE NEW FRAME & DOOR- SEE HARDWARE SCHEDULE.
19. REMOVE EXISTING LIGHT POLE AND ANCHOR COMPONENTS. SCRAPE CLEAN THE TOP OF EXISTING PRECAST COLUMN IN PREPARATION FOR NEW WORK. COORDINATE WITH ELECTRICAL DRAWINGS.CONTRACTOR SHALL SALVAGE, PROTECT, AND STORE LIGHT POLES FOR REUSE AS PART OF DEDUCT ALTERNATE #3.
20. REMOVE EXISTING CANTILEVERED ALUMINUM SUNSHADE SYSTEM AND ASSOCIATED ANCHOR COMPONENTS. USE THIS EXISTING SUNSHADE LOUVER TO MATCH EXACTLY IN KIND THE NEW WORK. COORDINATE WITH PLANS, ELEVATIONS AND DETAILS.
21. EXISTING ALUMINUM ARCHITECTURAL SCREEN SYSTEM TO REMAIN. PROTECT THROUGHOUT PROJECT DURATION AND REPLACE AS NEEDED IF DAMAGED. REFER TO SHEET AD103 FOR SUPPORTING PHOTOS.
22. REMOVE EXISTING STEEL GUARD RAILS, WIRE MESH SCREEN PANELS, AND ASSOCIATED MOUNTING HARDWARE IN THEIR ENTIRETY. PATCH / REPAIR CONCRETE TO MATCH ADJACENT SURFACES.
23. REMOVE EXISTING METAL GUARDRAIL IN ITS ENTIRETY. COORDINATE WITH CIVIL DRAWINGS.
24. REMOVE EXISTING DOWNSPOUT AND CAP DRAIN. COORDINATE WITH PLUMBING DRAWINGS.
25. REMOVE EXISTING CURTAINWALL SYSTEM IN ITS ENTIRETY. REFER TO SHEET AD103 FOR SUPPORTING PHOTOS.
26. REMOVE EXISTING FABRIC SCREEN INFILL AND ASSOCIATED ANCHORING / FASTENING HARDWARE. PATCH / REPAIR PCC TO MATCH ADJACENT SURFACE.
27. EXISTING ENTRANCE/EXIT SIGNS ON PRECAST PANEL ABOVE TO REMAIN.
28. EXISTING OVERHEAD HANGING CLEARANCE BAR SIGNAGE TO REMAIN. PROTECT DURING CONSTRUCTION . REMOVE, PROTECT AND STORE FOR LATER REINSTALLATION WHEN LEAVING IN PLACE RISKS DAMAGE DURING CONSTRUCTION PROCESSES.
29. EXISTING PEDESTRIAN CROSSING SIGNS TO REMAIN.

ISSUE FOR BID	08-09-2024
Revisions:	Date:

CONSULTANT

ARCHITECT/ENGINEER OF RECORD

BANCROFT ARCHITECTS + ENGINEERS
3300 Dundee Rd.
Northbrook, IL 60062
T: 847.952.9362
www. bancroft-ae.com

STAMP

LICENSED ARCHITECT 041124 CHRYSTAL D. CANADA REGISTERED STATE OF ILLINOIS

Office of Construction and Facilities Management

VA U.S. Department of Veterans Affairs

Drawing Title: ARCHITECTURAL- DEMOLITION SECTIONS	Phase: ISSUE FOR BID	Project Title: PARKING RAMP EXPANSION	Project Number: 528-18-375
			Building Number: 29
Approved: Project Director		Location: 3495 BAILEY AVE., BUFFALO, NY 14215	Drawing Number: AD301
		Issue Date: 08-09-2024 / Checked: CZ / Drawn: II	

K:\CCD_PROJECTS\2021\21-113 - Parking Ramp (Buffalo, NY)\400- Dwl\Docs\400- Drawings\WORKING\21-113_AD301.dwg
6/14/2609 12:39:03 PM

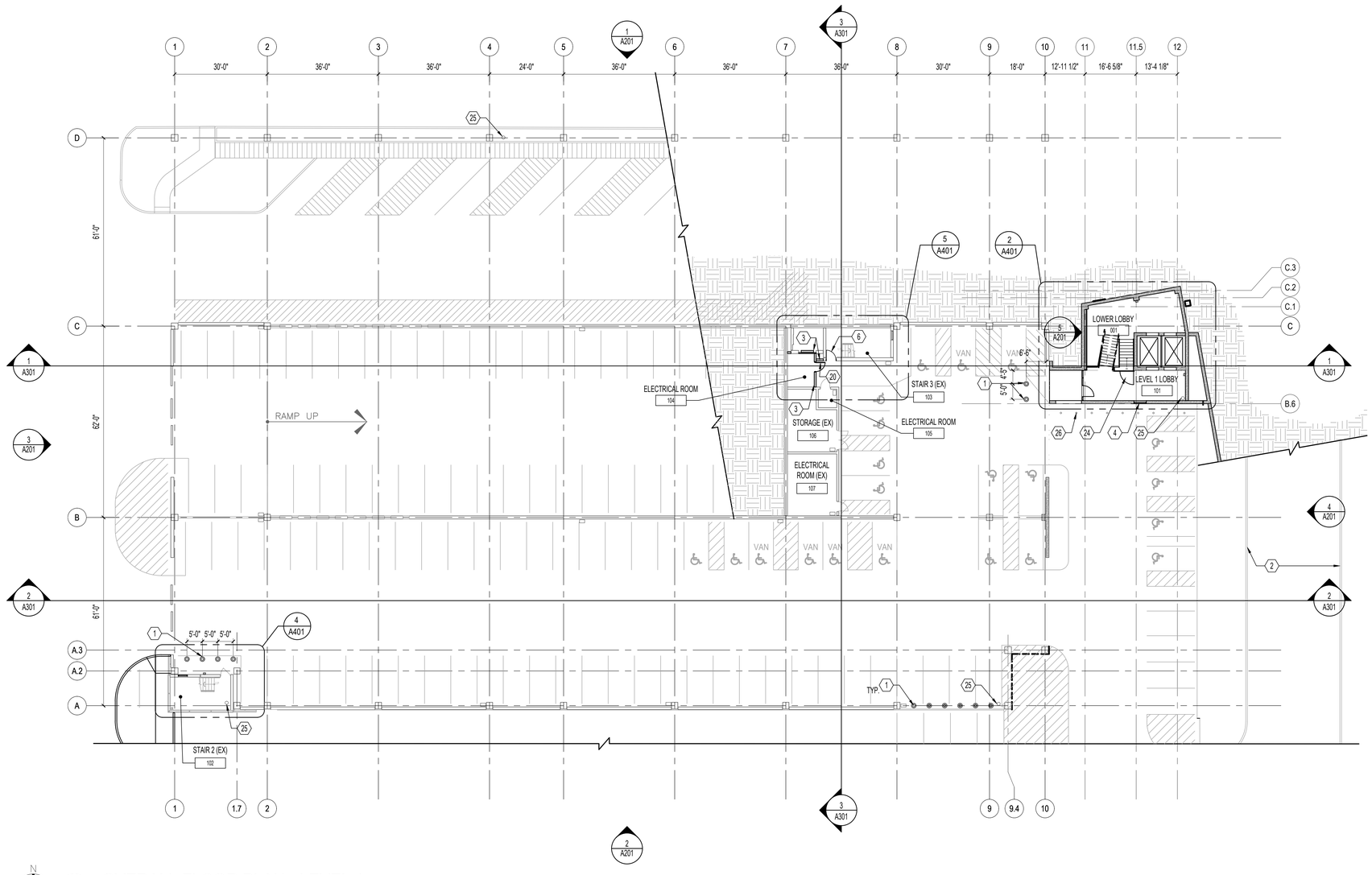

1 OVERALL FLOOR PLAN - LEVEL 1

1/16"=1'-0"

OVERALL FLOOR PLAN GENERAL NOTES

A. REFER TO SHEET G002 FOR BID DEDUCT ALTERNATE DESCRIPTIONS.

B. SEE CIVIL, STRUCTURAL, FIRE PROTECTION, PLUMBING, MECHANICAL AND ELECTRICAL DRAWINGS FOR NEW WORK.

C. SEAL/FIRESTOP ALL OPENINGS IN NEW 1 HR. AND SMOKE RATED PARTITION WALLS AND FLOORS. INCLUDES ALL EXPOSED CONDUIT AND PIPING.

D. INFILL ANY VOIDS IN CONCRETE STRUCTURE, SLAB AND PRECAST SPANDREL PANELS BY DEMOLITION.

(X) OVERALL FLOOR PLAN KEY NOTES

* NOTE: NOT ALL NOTES MAY APPLY TO THIS SHEET.

1. NEW PRE-FABRICATED CONCRETE BOLLARD. BASIS OF DESIGN: THE BELMONT BY STRESSCRETE GROUP. PREP CONCRETE SLAB FOR BASE PLATE MOUNTING WITH ANCHOR BOLTS AS PER MANUFACTURER'S REQUIREMENTS.
2. NEW RETAINING WALL, CONCRETE SIDEWALK, CURBS, ROADWAY AND ASSOCIATED SITE IMPROVEMENTS (FOR SCHEMATIC INTENT ONLY). REFER TO CIVIL DRAWINGS FOR DETAILED S.O.W.
3. NEW CMU WALL CONSTRUCTION - SEE WALL TYPES FOR ADDITIONAL INFORMATION.
4. ALUMINUM LOUVER VENT AND MOTORIZED DAMPER. LOUVER FINISH TO MATCH CURTAIN WALL MULLIONS. REFER TO MECHANICAL DRAWINGS FOR MORE INFORMATION.
5. NEW P.C. CONCRETE COLUMN - SEE STRUCTURAL DRAWINGS.
6. NEW DOOR AND HARDWARE. EXISTING FRAME TO REMAIN TO RECEIVE NEW DOOR. IF FRAME IS DAMAGED AND CANNOT ACCEPT NEW DOOR, REPLACE IN KIND. SEE HARDWARE SCHEDULE. PROVIDE "RESTRICTED ACCESS" OR "VA STAFF ONLY" SIGNAGE - SEE WAYFINDING SHEETS FOR MORE INFORMATION.
7. EXISTING BOLLARD TO REMAIN. REPLACE AS NEEDED DUE TO DAMAGE DURING DEMOLITION / CONSTRUCTION.
8. INFILL PERIMETER OPENINGS BETWEEN PRECAST PANELS AND COLUMNS WITH ALUMINUM ARCHITECTURAL SCREEN SYSTEM (TO MATCH EXISTING IN PROFILE, COLOR & MATERIAL). REFER TO ELEVATIONS AND SECTIONS FOR MORE INFORMATION. BID DEDUCT #6: DELETE SCREEN SYSTEM AT ALL LOCATIONS. ADD PAINTED STEEL RAILING TO MATCH EXISTING AT LEVEL 4 . EXISTING HANDRAIL TO REMAIN AT LEVELS 1, 2 AND 3. ADD MESH FABRIC TO ALL PRECAST OPENINGS AT ALL LEVELS. REFER TO DETAIL 5/A506.
9. INSTALL NEW ALUMINUM ARCHITECTURAL SCREEN SYSTEM WITH VA SIGNAGE. REFER TO EXTERIOR ELEVATIONS AND BID DEDUCT ALTERNATES FOR ADDITIONAL INFORMATION. PROVIDE STRUCTURAL STEEL FRAMING AT LEVEL 5.
10. NOT USED.
11. NEW ALUMINUM ARCHITECTURAL SCREEN SYSTEM TO MATCH EXISTING. INSTALL IN ALIGNMENT WITH EXISTING SYSTEM BELOW. REFER TO ELEVATIONS & WALL SECTIONS FOR ADDITIONAL INFORMATION. PROVIDE STRUCTURAL STEEL FRAMING AT LEVEL 5.
12. NEW CURTAIN WALL SYSTEM TO MATCH EXISTING. INSTALL IN ALIGNMENT WITH EXISTING SYSTEM BELOW. REFER TO ELEVATIONS & WALL SECTIONS FOR ADDITIONAL INFORMATION. PROVIDE STRUCTURAL STEEL FRAMING AT LEVEL 5.
13. PORTION OF NEW CURTAIN WALL SYSTEM AS DEDUCT ALTERNATE #4. REFER TO KEYNOTE 12 FOR CURTAIN WALL INFORMATION.
14. NEW METAL MESH PANELS TO MATCH EXISTING. INSTALL AT ALL OPENINGS OF INTERIOR PRECAST WALLS. REFER TO DETAILS SHEET A504.
15. PROVIDE (2) 6'-0" WIDE STEEL SNOW REMOVAL GATES WITH ALUMINUM ARCHITECTURAL SCREEN SYSTEM (TO MATCH ADJACENT). HEIGHT OF GATES TO ALIGN WITH TOP OF ADJACENT SCREEN SYSTEM. REFER TO DETAILS ON SHEETS A506.
16. ROOF ASSEMBLY R-1. SEE DETAIL 5/A406.
17. PHOTOVOLTAIC CANOPY COVERING ENTIRE UPPER LEVEL. SOLAR PANELS ON METAL Z-CHANNELS ON STEEL SUPPORTS STRUCTURE FOR CANOPY TO BE DELEGATED DESIGN. REFER TO BID DEDUCT ALTERNATES FOR ADDITIONAL INFORMATION.
18. MECHANICAL EQUIPMENT ON MANUFACTURER'S PREFABRICATED ROOF CURB. PROVIDE CURB FLASHING AND ROOF ACCESSORIES AS REQUIRED TO CREATE WATER TIGHT CONDITION AROUND EQUIPMENT. SEE MECHANICAL DRAWINGS FOR ADDITIONAL NOTES.
19. CONCRETE FILLED STEEL BOLLARD, PAINTED. REFER TO CIVIL DRAWINGS AND DETAILS FOR MORE INFORMATION.
20. NEW DOOR, FRAME & SIGNAGE - SEE SCHEDULE.
21. METAL CHAIN LINK FENCE WALL AND GATE INFILL ON TOP OF EXISTING STAIR ENCLOSURE. CHAIN LINK FENCE WALL TO UNDERSIDE OF NEW SLAB. CHAIN LINK FENCE WALL SHALL INCLUDE FABRIC-CHAIN LINK 2" MESH, 9 GAUGE, GALVANIZED WIRE; LINE POSTS - 2 3/8" O.D. GALVANIZED PIPE COMPLETE WITH POST TOPS; TOP RAIL-1 5/8" O.D.GALVANIZED PIPE; TERMINAL POSTS - END, CORNER AND GATE POSTS 3 1/2" O.D. GALVANIZED PIPE; GATE - 1 5/8" O.D. GALVANIZED PIPE, WELDED CONSTRUCTION TO MATCH FENCE WITH INDUSTRIAL STEEL HINGES, DROP PIN LATCH.
22. INFILL / PATCH EXISTING OPENING LEFT FROM REMOVED MECHANICAL EQUIPMENT. REFER TO ENLARGED PLANS FOR MORE INFORMATION.
23. SCUPPER AND DOWNSPOUT. REFER TO PLUMBING DRAWINGS FOR MORE INFORMATION.
24. RESTRICTED ACCESS GATE W/ SIGNAGE. SEE ENLARGED PLANS FOR ADDITIONAL INFORMATION.
25. FIRE STANDPIPE LOCATION. REFER TO PLUMBING DRAWINGS.
26. BOLLARDS. SEE CIVIL FOR DETAILS.
27. CANTILEVERED ALUMINUM SUNSHADE AND ASSOCIATED ANCHOR COMPONENTS TO MATCH EXISTING DEMOLISHED IN KIND. COORDINATE WITH PLANS, ELEVATIONS AND DETAILS.

PARKING GARAGE

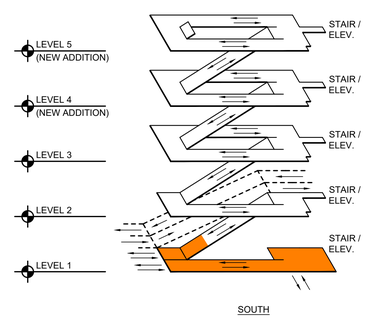

NEW STAIR / ELEVATOR TOWER

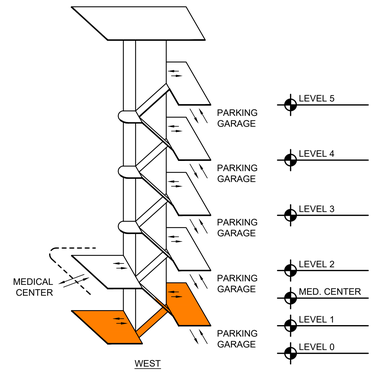

ISOMETRIC DIAGRAM

NTS

ISSUE FOR BID	08-09-2024
Revisions:	Date:

CONSULTANT

ARCHITECT/ENGINEER OF RECORD

BANCROFT ARCHITECTS + ENGINEERS
3300 Dundee Rd.
Northbrook, IL 60062
T: 847.952.9362
www. bancroft-ae.com

STAMP

LICENSED ARCHITECT CHERYL D. ZAWISLAK 001-016551 STATE OF ILLINOIS

Office of Construction and Facilities Management

VA U.S. Department of Veterans Affairs

Drawing Title: ARCHITECTURAL- OVERALL FLOOR PLAN - LEVEL 1 AND LOWER LOBBY	Phase: ISSUE FOR BID	Project Title: PARKING RAMP EXPANSION	Project Number: 528-18-375
			Building Number: 29
Approved: Project Director		Location: 3495 BAILEY AVE., BUFFALO, NY 14215	Drawing Number: A101
		Issue Date: 08-09-2024 / Checked: CZ / Drawn: II	

VA FORM 08 - 6231

6/14/2009 12:39:03 PM

K:\CCG_PROJECTS\2021\21-113 - Parking Ramp (Buffalo, NY)\400- DwtDocs\402- Drawings\WORKING\21-113_A101.dwg

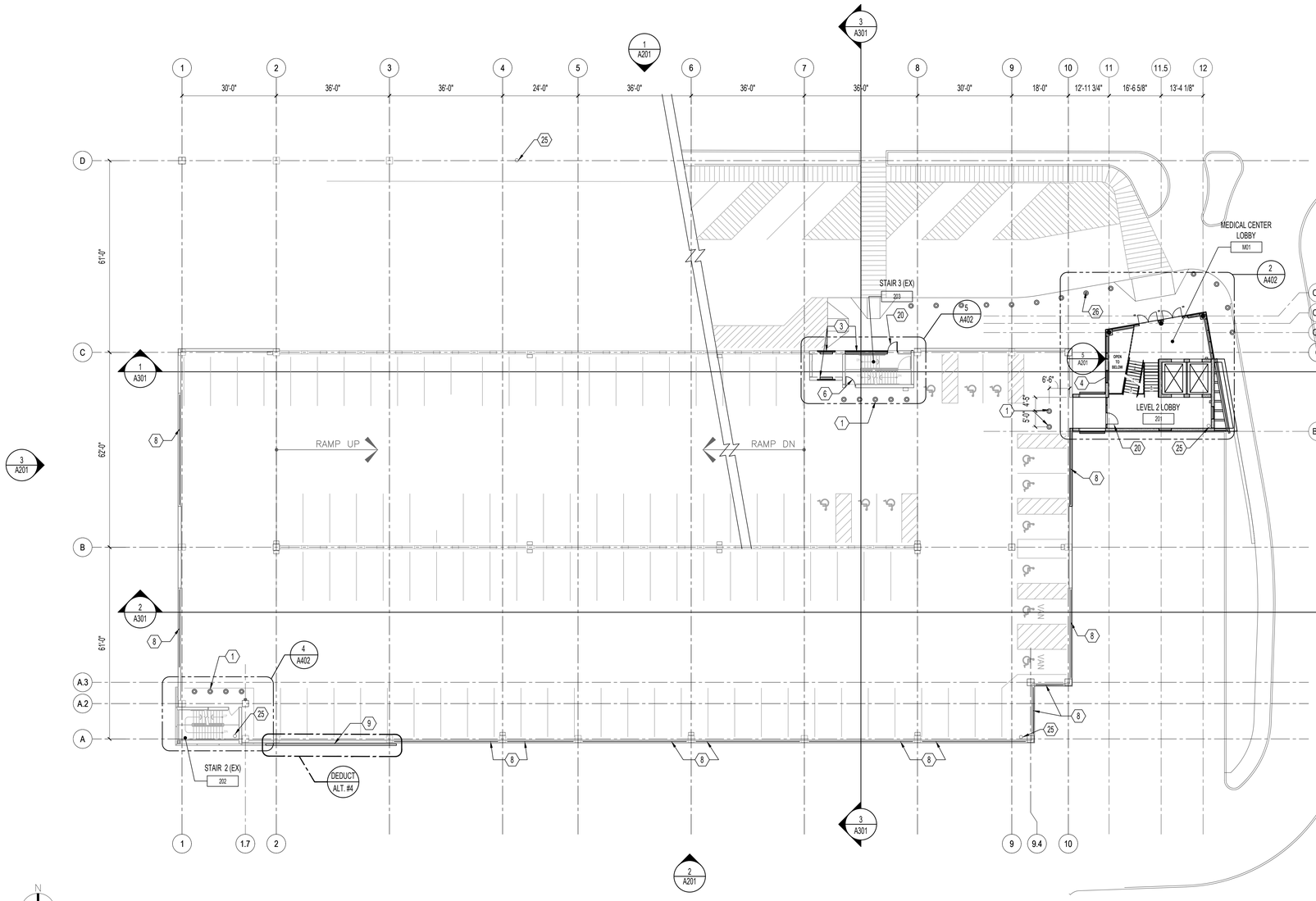

1 OVERALL FLOOR PLAN - LEVEL 2

1/16"=1'-0"

OVERALL FLOOR PLAN GENERAL NOTES

A. REFER TO SHEET GI002 FOR BID DEDUCT ALTERNATE DESCRIPTIONS.

B. SEE CIVIL, STRUCTURAL, FIRE PROTECTION, PLUMBING, MECHANICAL AND ELECTRICAL DRAWINGS FOR NEW WORK.

C. SEAL/FIRESTOP ALL OPENINGS IN NEW 1 HR. AND SMOKE RATED PARTITION WALLS AND FLOORS. INCLUDES ALL EXPOSED CONDUIT AND PIPING.

D. INFILL ANY VOIDS IN CONCRETE STRUCTURE, SLAB AND PRECAST SPANDREL PANELS BY DEMOLITION.

(X) OVERALL FLOOR PLAN KEY NOTES

* NOTE: NOT ALL NOTES MAY APPLY TO THIS SHEET.

1. NEW PRE-FABRICATED CONCRETE BOLLARD. BASIS OF DESIGN: THE BELMONT BY STRESSCRETE GROUP. PREP CONCRETE SLAB FOR BASE PLATE MOUNTING WITH ANCHOR BOLTS AS PER MANUFACTURER'S REQUIREMENTS.
2. NEW RETAINING WALL, CONCRETE SIDEWALK, CURBS, ROADWAY AND ASSOCIATED SITE IMPROVEMENTS (FOR SCHEMATIC INTENT ONLY). REFER TO CIVIL DRAWINGS FOR DETAILED S.O.W.
3. NEW CMU WALL CONSTRUCTION - SEE WALL TYPES FOR ADDITIONAL INFORMATION.
4. ALUMINUM LOUVER VENT AND MOTORIZED DAMPER. LOUVER FINISH TO MATCH CURTAIN WALL MULLIONS. REFER TO MECHANICAL DRAWINGS FOR MORE INFORMATION.
5. NEW P.C. CONCRETE COLUMN - SEE STRUCTURAL DRAWINGS.
6. NEW DOOR AND HARDWARE. EXISTING FRAME TO REMAIN TO RECEIVE NEW DOOR. IF FRAME IS DAMAGED AND CANNOT ACCEPT NEW DOOR, REPLACE IN KIND. SEE HARDWARE SCHEDULE. PROVIDE "RESTRICTED ACCESS" OR "VA STAFF ONLY" SIGNAGE - SEE WAYFINDING SHEETS FOR MORE INFORMATION.
7. EXISTING BOLLARD TO REMAIN. REPLACE AS NEEDED DUE TO DAMAGE DURING DEMOLITION / CONSTRUCTION.
8. INFILL PERIMETER OPENINGS BETWEEN PRECAST PANELS AND COLUMNS WITH ALUMINUM ARCHITECTURAL SCREEN SYSTEM (TO MATCH EXISTING IN PROFILE, COLOR & MATERIAL). REFER TO ELEVATIONS AND SECTIONS FOR MORE INFORMATION. BID DEDUCT #6: DELETE SCREEN SYSTEM AT ALL LOCATIONS. ADD PAINTED STEEL RAILING TO MATCH EXISTING AT LEVEL 4 . EXISTING HANDRAIL TO REMAIN AT LEVELS 1, 2 AND 3. ADD MESH FABRIC TO ALL PRECAST OPENINGS AT ALL LEVELS. REFER TO DETAIL 5/A506.
9. INSTALL NEW ALUMINUM ARCHITECTURAL SCREEN SYSTEM WITH VA SIGNAGE. REFER TO EXTERIOR ELEVATIONS AND BID DEDUCT ALTERNATES FOR ADDITIONAL INFORMATION. PROVIDE STRUCTURAL STEEL FRAMING AT LEVEL 5.
10. NOT USED.
11. NEW ALUMINUM ARCHITECTURAL SCREEN SYSTEM TO MATCH EXISTING. INSTALL IN ALIGNMENT WITH EXISTING SYSTEM BELOW. REFER TO ELEVATIONS & WALL SECTIONS FOR ADDITIONAL INFORMATION. PROVIDE STRUCTURAL STEEL FRAMING AT LEVEL 5.
12. NEW CURTAIN WALL SYSTEM TO MATCH EXISTING. INSTALL IN ALIGNMENT WITH EXISTING SYSTEM BELOW. REFER TO ELEVATIONS & WALL SECTIONS FOR ADDITIONAL INFORMATION. PROVIDE STRUCTURAL STEEL FRAMING AT LEVEL 5.
13. PORTION OF NEW CURTAIN WALL SYSTEM AS DEDUCT ALTERNATE #4. REFER TO KEYNOTE 12 FOR CURTAIN WALL INFORMATION.
14. NEW METAL MESH PANELS TO MATCH EXISTING. INSTALL AT ALL OPENINGS OF INTERIOR PRECAST WALLS. REFER TO DETAILS SHEET A504.
15. PROVIDE (2) 6'-0" WIDE STEEL SNOW REMOVAL GATES WITH ALUMINUM ARCHITECTURAL SCREEN SYSTEM (TO MATCH ADJACENT). HEIGHT OF GATES TO ALIGN WITH TOP OF ADJACENT SCREEN SYSTEM. REFER TO DETAILS ON SHEETS A506.
16. ROOF ASSEMBLY R-1. SEE DETAIL 5/A408.
17. PHOTOVOLTAIC CANOPY COVERING ENTIRE UPPER LEVEL. SOLAR PANELS ON METAL Z-CHANNELS ON STEEL SUPPORTS STRUCTURE FOR CANOPY TO BE DELEGATED DESIGN. REFER TO BID DEDUCT ALTERNATES FOR ADDITIONAL INFORMATION.
18. MECHANICAL EQUIPMENT ON MANUFACTURER'S PREFABRICATED ROOF CURB. PROVIDE CURB FLASHING AND ROOF ACCESSORIES AS REQUIRED TO CREATE WATER TIGHT CONDITION AROUND EQUIPMENT. SEE MECHANICAL DRAWINGS FOR ADDITIONAL NOTES.
19. CONCRETE FILLED STEEL BOLLARD, PAINTED. REFER TO CIVIL DRAWINGS AND DETAILS FOR MORE INFORMATION.
20. NEW DOOR, FRAME & SIGNAGE - SEE SCHEDULE.
21. METAL CHAIN LINK FENCE WALL AND GATE INFILL ON TOP OF EXISTING STAIR ENCLOSURE. CHAIN LINK FENCE WALL TO UNDERSIDE OF NEW SLAB. CHAIN LINK FENCE WALL SHALL INCLUDE FABRIC-CHAIN LINK 2" MESH, 9 GAUGE, GALVANIZED WIRE; LINE POSTS - 2 3/8" O.D. GALVANIZED PIPE COMPLETE WITH POST TOPS; TOP RAIL-1 5/8" O.D.GALVANIZED PIPE; TERMINAL POSTS - END, CORNER AND GATE POSTS 3 1/2" O.D. GALVANIZED PIPE; GATE - 1 5/8" O.D. GALVANIZED PIPE, WELDED CONSTRUCTION TO MATCH FENCE WITH INDUSTRIAL STEEL HINGES, DROP PIN LATCH.
22. INFILL / PATCH EXISTING OPENING LEFT FROM REMOVED MECHANICAL EQUIPMENT. REFER TO ENLARGED PLANS FOR MORE INFORMATION.
23. SCUPPER AND DOWNSPOUT. REFER TO PLUMBING DRAWINGS FOR MORE INFORMATION.
24. RESTRICTED ACCESS GATE W/ SIGNAGE. SEE ENLARGED PLANS FOR ADDITIONAL INFORMATION.
25. FIRE STANDPIPE LOCATION. REFER TO PLUMBING DRAWINGS.
26. BOLLARDS. SEE CIVIL FOR DETAILS.
27. CANTILEVERED ALUMINUM SUNSHADE AND ASSOCIATED ANCHOR COMPONENTS TO MATCH EXISTING DEMOLISHED IN KIND. COORDINATE WITH PLANS, ELEVATIONS AND DETAILS.

PARKING GARAGE

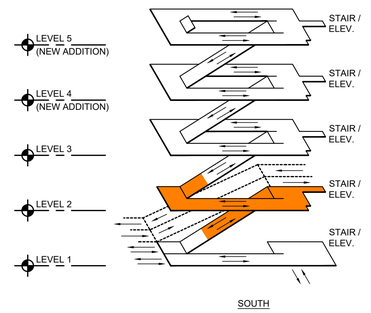

SOUTH

NEW STAIR / ELEVATOR TOWER

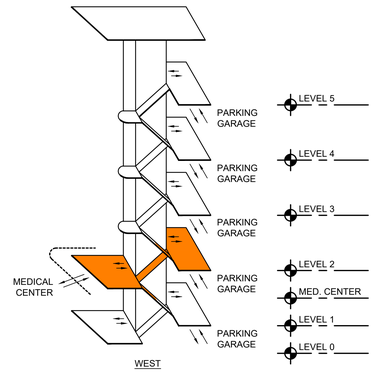

WEST

ISOMETRIC DIAGRAM

NTS

ISSUE FOR BID	08-09-2024
Revisions:	Date:

CONSULTANT

ARCHITECT/ENGINEER OF RECORD

BANCROFT ARCHITECTS + ENGINEERS
3300 Dundee Rd.
Northbrook, IL 60062
T: 847.952.9362
www. bancroft-ae.com

STAMP

LICENSED ARCHITECT 5-1-24 CHERYL D. CAVANUA No. 001.020655 STATE OF ILLINOIS

Office of Construction and Facilities Management

VA U.S. Department of Veterans Affairs

Drawing Title: ARCHITECTURAL- OVERALL FLOOR PLAN - LEVEL 2 AND MEDICAL CENTER LOBBY	Phase: ISSUE FOR BID	Project Title: PARKING RAMP EXPANSION	Project Number: 528-18-375
			Building Number: 29
Approved: Project Director		Location: 3495 BAILEY AVE., BUFFALO, NY 14215	Drawing Number: A102
		Issue Date: 08-09-2024 / Checked: CZ / Drawn: II	

6/14/2024 12:39:03 PM
K:\CCO_PROJECTS\2021\21-113 - Parking Ramp (Buffalo, NY)\400- DesDocs\400- Drawings\WORKING\21-113_A102.dwg

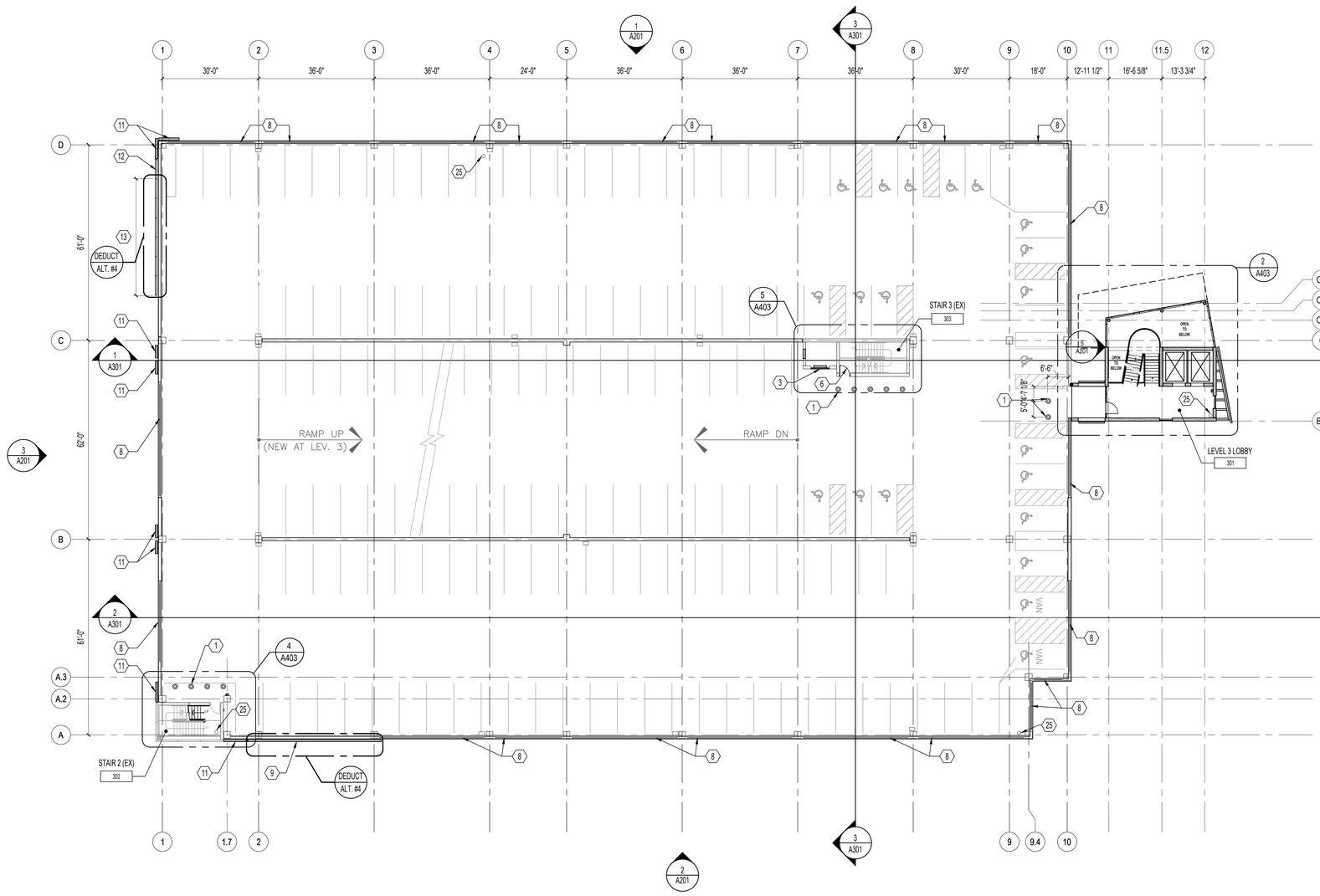

1 OVERALL FLOOR PLAN - LEVEL 3

1/16"=1'-0"

OVERALL FLOOR PLAN GENERAL NOTES

A. REFER TO SHEET GI002 FOR BID DEDUCT ALTERNATE DESCRIPTIONS.

B. SEE CIVIL, STRUCTURAL, FIRE PROTECTION, PLUMBING, MECHANICAL AND ELECTRICAL DRAWINGS FOR NEW WORK.

C. SEAL/FIRESTOP ALL OPENINGS IN NEW 1 HR. AND SMOKE RATED PARTITION WALLS AND FLOORS. INCLUDES ALL EXPOSED CONDUIT AND PIPING.

D. INFILL ANY VOIDS IN CONCRETE STRUCTURE, SLAB AND PRECAST SPANDREL PANELS BY DEMOLITION.

(X) OVERALL FLOOR PLAN KEY NOTES

* NOTE: NOT ALL NOTES MAY APPLY TO THIS SHEET.

1. NEW PRE-FABRICATED CONCRETE BOLLARD. BASIS OF DESIGN: THE BELMONT BY STRESSCRETE GROUP. PREP CONCRETE SLAB FOR BASE PLATE MOUNTING WITH ANCHOR BOLTS AS PER MANUFACTURER'S REQUIREMENTS.
2. NEW RETAINING WALL, CONCRETE SIDEWALK, CURBS, ROADWAY AND ASSOCIATED SITE IMPROVEMENTS (FOR SCHEMATIC INTENT ONLY). REFER TO CIVIL DRAWINGS FOR DETAILED S.O.W.
3. NEW CMU WALL CONSTRUCTION - SEE WALL TYPES FOR ADDITIONAL INFORMATION.
4. ALUMINUM LOUVER VENT AND MOTORIZED DAMPER. LOUVER FINISH TO MATCH CURTAIN WALL MULLIONS. REFER TO MECHANICAL DRAWINGS FOR MORE INFORMATION.
5. NEW P.C. CONCRETE COLUMN - SEE STRUCTURAL DRAWINGS.
6. NEW DOOR AND HARDWARE. EXISTING FRAME TO REMAIN TO RECEIVE NEW DOOR. IF FRAME IS DAMAGED AND CANNOT ACCEPT NEW DOOR, REPLACE IN KIND. SEE HARDWARE SCHEDULE. PROVIDE "RESTRICTED ACCESS" OR "VA STAFF ONLY" SIGNAGE - SEE WAYFINDING SHEETS FOR MORE INFORMATION.
7. EXISTING BOLLARD TO REMAIN. REPLACE AS NEEDED DUE TO DAMAGE DURING DEMOLITION / CONSTRUCTION.
8. INFILL PERIMETER OPENINGS BETWEEN PRECAST PANELS AND COLUMNS WITH ALUMINUM ARCHITECTURAL SCREEN SYSTEM (TO MATCH EXISTING IN PROFILE, COLOR & MATERIAL). REFER TO ELEVATIONS AND SECTIONS FOR MORE INFORMATION. BID DEDUCT #6: DELETE SCREEN SYSTEM AT ALL LOCATIONS. ADD PAINTED STEEL RAILING TO MATCH EXISTING AT LEVEL 4 . EXISTING HANDRAIL TO REMAIN AT LEVELS 1, 2 AND 3. ADD MESH FABRIC TO ALL PRECAST OPENINGS AT ALL LEVELS. REFER TO DETAIL 5/A506.
9. INSTALL NEW ALUMINUM ARCHITECTURAL SCREEN SYSTEM WITH VA SIGNAGE. REFER TO EXTERIOR ELEVATIONS AND BID DEDUCT ALTERNATES FOR ADDITIONAL INFORMATION. PROVIDE STRUCTURAL STEEL FRAMING AT LEVEL 5.
10. NOT USED.
11. NEW ALUMINUM ARCHITECTURAL SCREEN SYSTEM TO MATCH EXISTING. INSTALL IN ALIGNMENT WITH EXISTING SYSTEM BELOW. REFER TO ELEVATIONS & WALL SECTIONS FOR ADDITIONAL INFORMATION. PROVIDE STRUCTURAL STEEL FRAMING AT LEVEL 5.
12. NEW CURTAIN WALL SYSTEM TO MATCH EXISTING. INSTALL IN ALIGNMENT WITH EXISTING SYSTEM BELOW. REFER TO ELEVATIONS & WALL SECTIONS FOR ADDITIONAL INFORMATION. PROVIDE STRUCTURAL STEEL FRAMING AT LEVEL 5.
13. PORTION OF NEW CURTAIN WALL SYSTEM AS DEDUCT ALTERNATE #4. REFER TO KEYNOTE 12 FOR CURTAIN WALL INFORMATION.
14. NEW METAL MESH PANELS TO MATCH EXISTING. INSTALL AT ALL OPENINGS OF INTERIOR PRECAST WALLS. REFER TO DETAILS SHEET A504.
15. PROVIDE (2) 6'-0" WIDE STEEL SNOW REMOVAL GATES WITH ALUMINUM ARCHITECTURAL SCREEN SYSTEM (TO MATCH ADJACENT). HEIGHT OF GATES TO ALIGN WITH TOP OF ADJACENT SCREEN SYSTEM. REFER TO DETAILS ON SHEETS A506.
16. ROOF ASSEMBLY R-1. SEE DETAIL 5/A406.
17. PHOTOVOLTAIC CANOPY COVERING ENTIRE UPPER LEVEL. SOLAR PANELS ON METAL Z-CHANNELS ON STEEL SUPPORTS STRUCTURE FOR CANOPY TO BE DELEGATED DESIGN. REFER TO BID DEDUCT ALTERNATES FOR ADDITIONAL INFORMATION.
18. MECHANICAL EQUIPMENT ON MANUFACTURER'S PREFABRICATED ROOF CURB. PROVIDE CURB FLASHING AND ROOF ACCESSORIES AS REQUIRED TO CREATE WATER TIGHT CONDITION AROUND EQUIPMENT. SEE MECHANICAL DRAWINGS FOR ADDITIONAL NOTES.
19. CONCRETE FILLED STEEL BOLLARD, PAINTED. REFER TO CIVIL DRAWINGS AND DETAILS FOR MORE INFORMATION.
20. NEW DOOR, FRAME & SIGNAGE - SEE SCHEDULE.
21. METAL CHAIN LINK FENCE WALL AND GATE INFILL ON TOP OF EXISTING STAIR ENCLOSURE. CHAIN LINK FENCE WALL TO UNDERSIDE OF NEW SLAB. CHAIN LINK FENCE WALL SHALL INCLUDE FABRIC-CHAIN LINK 2" MESH, 9 GAUGE, GALVANIZED WIRE; LINE POSTS - 2 3/8" O.D. GALVANIZED PIPE COMPLETE WITH POST TOPS; TOP RAIL-1 5/8" O.D.GALVANIZED PIPE; TERMINAL POSTS - END, CORNER AND GATE POSTS 3 1/2" O.D. GALVANIZED PIPE; GATE - 1 5/8" O.D. GALVANIZED PIPE, WELDED CONSTRUCTION TO MATCH FENCE WITH INDUSTRIAL STEEL HINGES, DROP PIN LATCH.
22. INFILL / PATCH EXISTING OPENING LEFT FROM REMOVED MECHANICAL EQUIPMENT. REFER TO ENLARGED PLANS FOR MORE INFORMATION.
23. SCUPPER AND DOWNSPOUT. REFER TO PLUMBING DRAWINGS FOR MORE INFORMATION.
24. RESTRICTED ACCESS GATE W/ SIGNAGE. SEE ENLARGED PLANS FOR ADDITIONAL INFORMATION.
25. FIRE STANDPIPE LOCATION. REFER TO PLUMBING DRAWINGS.
26. BOLLARDS. SEE CIVIL FOR DETAILS.
27. CANTILEVERED ALUMINUM SUNSHADE AND ASSOCIATED ANCHOR COMPONENTS TO MATCH EXISTING DEMOLISHED IN KIND. COORDINATE WITH PLANS, ELEVATIONS AND DETAILS.

PARKING GARAGE

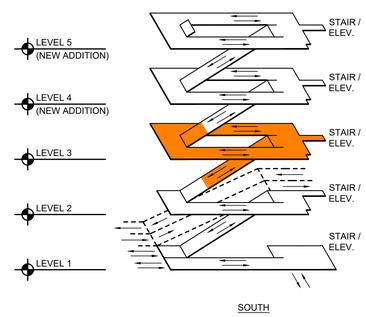

NEW STAIR / ELEVATOR TOWER

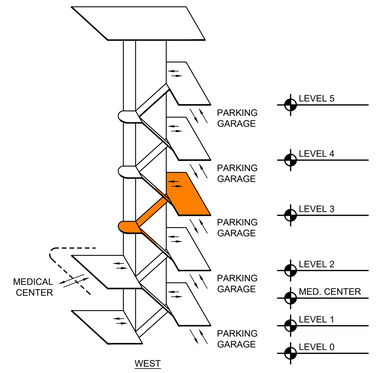

ISOMETRIC DIAGRAM

NTS

ISSUE FOR BID	08-09-2024
Revisions:	Date:

CONSULTANT

ARCHITECT/ENGINEER OF RECORD

BANCROFT ARCHITECTS + ENGINEERS

3300 Dundee Rd.
Northbrook, IL 60062
T: 847.952.9362
www. bancroft-ae.com

STAMP

Office of Construction and Facilities Management

VA U.S. Department of Veterans Affairs

Drawing Title: ARCHITECTURAL- OVERALL FLOOR PLAN - LEVEL 3	Phase: ISSUE FOR BID	Project Title: PARKING RAMP EXPANSION	Project Number: 528-18-375
			Building Number: 29
Approved: Project Director		Location: 3495 BAILEY AVE., BUFFALO, NY 14215	Drawing Number: A103
		Issue Date: 08-09-2024 / Checked: CZ / Drawn: II	

K:\CCG_PROJECTS\2026\121-113 - Parking Ramp (Buffalo, NY)\400- DwtDocs\402- Drawings\WORKING\21-113_A103.dwg

6/14/2009 12:39:03 PM

VA FORM 08 - 6231

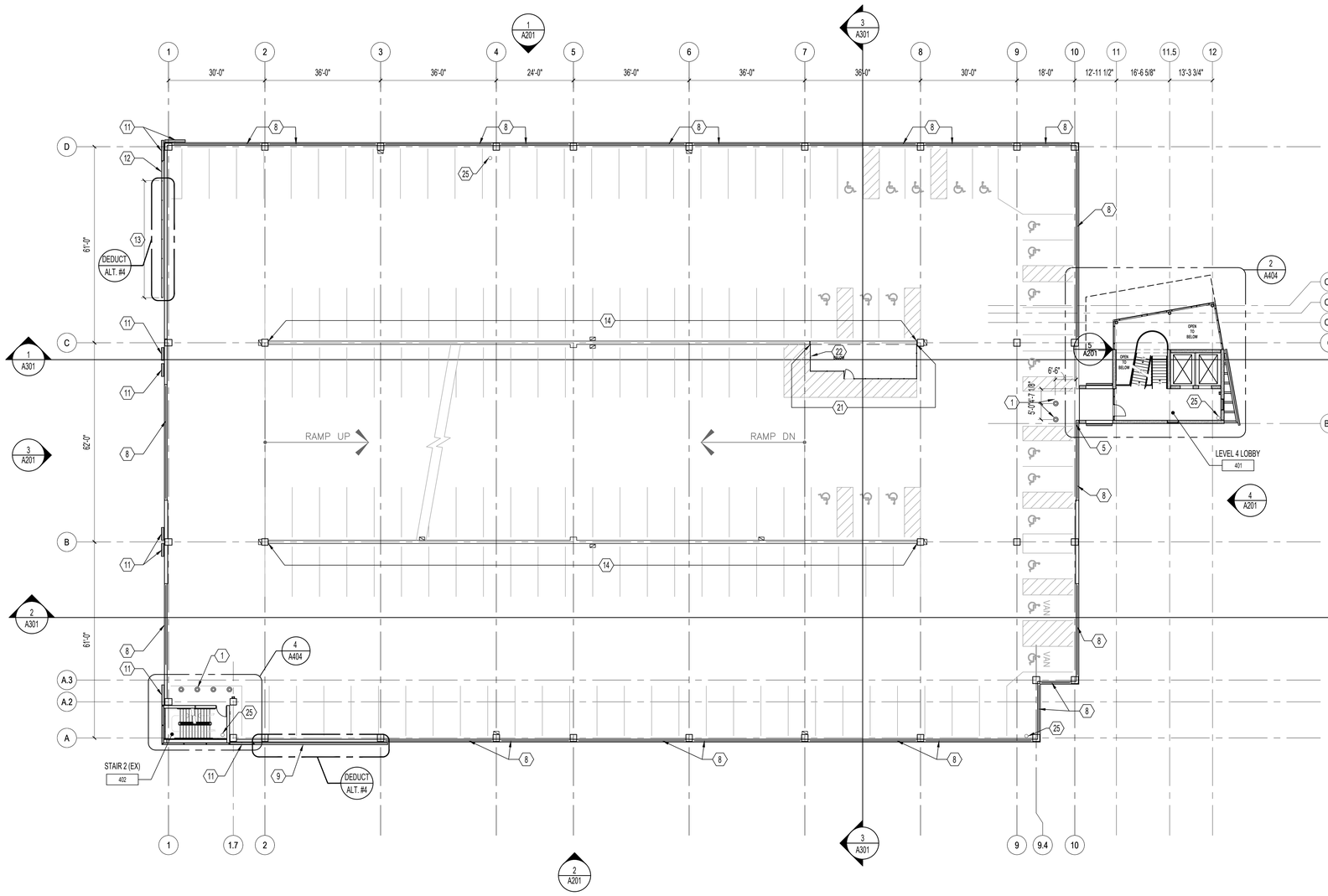

1 OVERALL FLOOR PLAN - LEVEL 4

1/16"=1'-0"

OVERALL FLOOR PLAN GENERAL NOTES

A. REFER TO SHEET GI002 FOR BID DEDUCT ALTERNATE DESCRIPTIONS.

B. SEE CIVIL, STRUCTURAL, FIRE PROTECTION, PLUMBING, MECHANICAL AND ELECTRICAL DRAWINGS FOR NEW WORK.

C. SEAL/FIRESTOP ALL OPENINGS IN NEW 1 HR. AND SMOKE RATED PARTITION WALLS AND FLOORS. INCLUDES ALL EXPOSED CONDUIT AND PIPING.

D. INFILL ANY VOIDS IN CONCRETE STRUCTURE, SLAB AND PRECAST SPANDREL PANELS BY DEMOLITION.

(X) OVERALL FLOOR PLAN KEY NOTES

* NOTE: NOT ALL NOTES MAY APPLY TO THIS SHEET.

1. NEW PRE-FABRICATED CONCRETE BOLLARD. BASIS OF DESIGN: THE BELMONT BY STRESSCRETE GROUP. PREP CONCRETE SLAB FOR BASE PLATE MOUNTING WITH ANCHOR BOLTS AS PER MANUFACTURER'S REQUIREMENTS.
2. NEW RETAINING WALL, CONCRETE SIDEWALK, CURBS, ROADWAY AND ASSOCIATED SITE IMPROVEMENTS (FOR SCHEMATIC INTENT ONLY). REFER TO CIVIL DRAWINGS FOR DETAILED S.O.W.
3. NEW CMU WALL CONSTRUCTION - SEE WALL TYPES FOR ADDITIONAL INFORMATION.
4. ALUMINUM LOUVER VENT AND MOTORIZED DAMPER. LOUVER FINISH TO MATCH CURTAIN WALL MULLIONS. REFER TO MECHANICAL DRAWINGS FOR MORE INFORMATION.
5. NEW P.C. CONCRETE COLUMN - SEE STRUCTURAL DRAWINGS.
6. NEW DOOR AND HARDWARE. EXISTING FRAME TO REMAIN TO RECEIVE NEW DOOR. IF FRAME IS DAMAGED AND CANNOT ACCEPT NEW DOOR, REPLACE IN KIND. SEE HARDWARE SCHEDULE. PROVIDE "RESTRICTED ACCESS" OR "VA STAFF ONLY" SIGNAGE - SEE WAYFINDING SHEETS FOR MORE INFORMATION.
7. EXISTING BOLLARD TO REMAIN. REPLACE AS NEEDED DUE TO DAMAGE DURING DEMOLITION / CONSTRUCTION.
8. INFILL PERIMETER OPENINGS BETWEEN PRECAST PANELS AND COLUMNS WITH ALUMINUM ARCHITECTURAL SCREEN SYSTEM (TO MATCH EXISTING IN PROFILE, COLOR & MATERIAL). REFER TO ELEVATIONS AND SECTIONS FOR MORE INFORMATION. BID DEDUCT #6: DELETE SCREEN SYSTEM AT ALL LOCATIONS. ADD PAINTED STEEL RAILING TO MATCH EXISTING AT LEVEL 4 . EXISTING HANDRAIL TO REMAIN AT LEVELS 1, 2 AND 3. ADD MESH FABRIC TO ALL PRECAST OPENINGS AT ALL LEVELS. REFER TO DETAIL 5/A506.
9. INSTALL NEW ALUMINUM ARCHITECTURAL SCREEN SYSTEM WITH VA SIGNAGE. REFER TO EXTERIOR ELEVATIONS AND BID DEDUCT ALTERNATES FOR ADDITIONAL INFORMATION. PROVIDE STRUCTURAL STEEL FRAMING AT LEVEL 5.
10. NOT USED.
11. NEW ALUMINUM ARCHITECTURAL SCREEN SYSTEM TO MATCH EXISTING. INSTALL IN ALIGNMENT WITH EXISTING SYSTEM BELOW. REFER TO ELEVATIONS & WALL SECTIONS FOR ADDITIONAL INFORMATION. PROVIDE STRUCTURAL STEEL FRAMING AT LEVEL 5.
12. NEW CURTAIN WALL SYSTEM TO MATCH EXISTING. INSTALL IN ALIGNMENT WITH EXISTING SYSTEM BELOW. REFER TO ELEVATIONS & WALL SECTIONS FOR ADDITIONAL INFORMATION. PROVIDE STRUCTURAL STEEL FRAMING AT LEVEL 5.
13. PORTION OF NEW CURTAIN WALL SYSTEM AS DEDUCT ALTERNATE #4. REFER TO KEYNOTE 12 FOR CURTAIN WALL INFORMATION.
14. NEW METAL MESH PANELS TO MATCH EXISTING. INSTALL AT ALL OPENINGS OF INTERIOR PRECAST WALLS. REFER TO DETAILS SHEET A504.
15. PROVIDE (2) 6'-0" WIDE STEEL SNOW REMOVAL GATES WITH ALUMINUM ARCHITECTURAL SCREEN SYSTEM (TO MATCH ADJACENT). HEIGHT OF GATES TO ALIGN WITH TOP OF ADJACENT SCREEN SYSTEM. REFER TO DETAILS ON SHEETS A506.
16. ROOF ASSEMBLY R-1. SEE DETAIL 5/A406.
17. PHOTOVOLTAIC CANOPY COVERING ENTIRE UPPER LEVEL. SOLAR PANELS ON METAL Z-CHANNELS ON STEEL SUPPORTS STRUCTURE FOR CANOPY TO BE DELEGATED DESIGN. REFER TO BID DEDUCT ALTERNATES FOR ADDITIONAL INFORMATION.
18. MECHANICAL EQUIPMENT ON MANUFACTURER'S PREFABRICATED ROOF CURB. PROVIDE CURB FLASHING AND ROOF ACCESSORIES AS REQUIRED TO CREATE WATER TIGHT CONDITION AROUND EQUIPMENT. SEE MECHANICAL DRAWINGS FOR ADDITIONAL NOTES.
19. CONCRETE FILLED STEEL BOLLARD, PAINTED. REFER TO CIVIL DRAWINGS AND DETAILS FOR MORE INFORMATION.
20. NEW DOOR, FRAME & SIGNAGE - SEE SCHEDULE.
21. METAL CHAIN LINK FENCE WALL AND GATE INFILL ON TOP OF EXISTING STAIR ENCLOSURE. CHAIN LINK FENCE WALL TO UNDERSIDE OF NEW SLAB. CHAIN LINK FENCE WALL SHALL INCLUDE FABRIC-CHAIN LINK 2" MESH, 9 GAUGE, GALVANIZED WIRE; LINE POSTS - 2 3/8" O.D. GALVANIZED PIPE COMPLETE WITH POST TOPS; TOP RAIL-1 5/8" O.D.GALVANIZED PIPE; TERMINAL POSTS - END, CORNER AND GATE POSTS 3 1/2" O.D. GALVANIZED PIPE; GATE - 1 5/8" O.D. GALVANIZED PIPE, WELDED CONSTRUCTION TO MATCH FENCE WITH INDUSTRIAL STEEL HINGES, DROP PIN LATCH.
22. INFILL / PATCH EXISTING OPENING LEFT FROM REMOVED MECHANICAL EQUIPMENT. REFER TO ENLARGED PLANS FOR MORE INFORMATION.
23. SCUPPER AND DOWNSPOUT. REFER TO PLUMBING DRAWINGS FOR MORE INFORMATION.
24. RESTRICTED ACCESS GATE W/ SIGNAGE. SEE ENLARGED PLANS FOR ADDITIONAL INFORMATION.
25. FIRE STANDPIPE LOCATION. REFER TO PLUMBING DRAWINGS.
26. BOLLARDS. SEE CIVIL FOR DETAILS.
27. CANTILEVERED ALUMINUM SUNSHADE AND ASSOCIATED ANCHOR COMPONENTS TO MATCH EXISTING DEMOLISHED IN KIND. COORDINATE WITH PLANS, ELEVATIONS AND DETAILS.

PARKING GARAGE

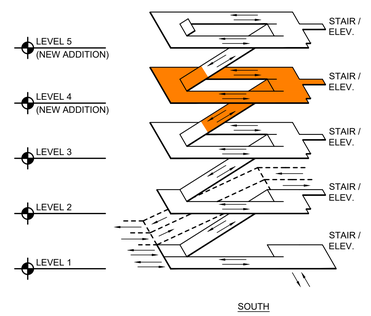

NEW STAIR / ELEVATOR TOWER

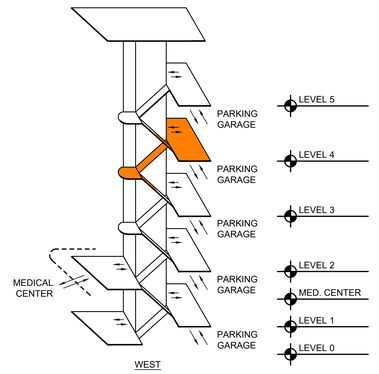

ISOMETRIC DIAGRAM

NTS

ISSUE FOR BID	08-09-2024
Revisions:	Date:

CONSULTANT

ARCHITECT/ENGINEER OF RECORD

BANCROFT ARCHITECTS + ENGINEERS

3300 Dundee Rd.
Northbrook, IL 60062
T: 847.952.9362
www. bancroft-ae.com

STAMP

LICENSED ARCHITECT CHERYL D. ZAWISLAK 001-016251 STATE OF ILLINOIS 6/9/25

Office of Construction and Facilities Management

VA U.S. Department of Veterans Affairs

Drawing Title: ARCHITECTURAL- OVERALL FLOOR PLAN - LEVEL 4	Phase: ISSUE FOR BID	Project Title: PARKING RAMP EXPANSION	Project Number: 528-18-375
			Building Number: 29
Approved: Project Director		Location: 3495 BAILEY AVE., BUFFALO, NY 14215	Drawing Number: A104
		Issue Date: 08-09-2024 / Checked: CZ / Drawn: II	

6/14/2009 12:39:03 PM

K:\CCG_PROJECTS\2021\21-113 - Parking Ramp (Buffalo, NY)\400- DesiDocs\402- Drawings\WORKING\21-113_A104.dwg

VA FORM 08 - 6231

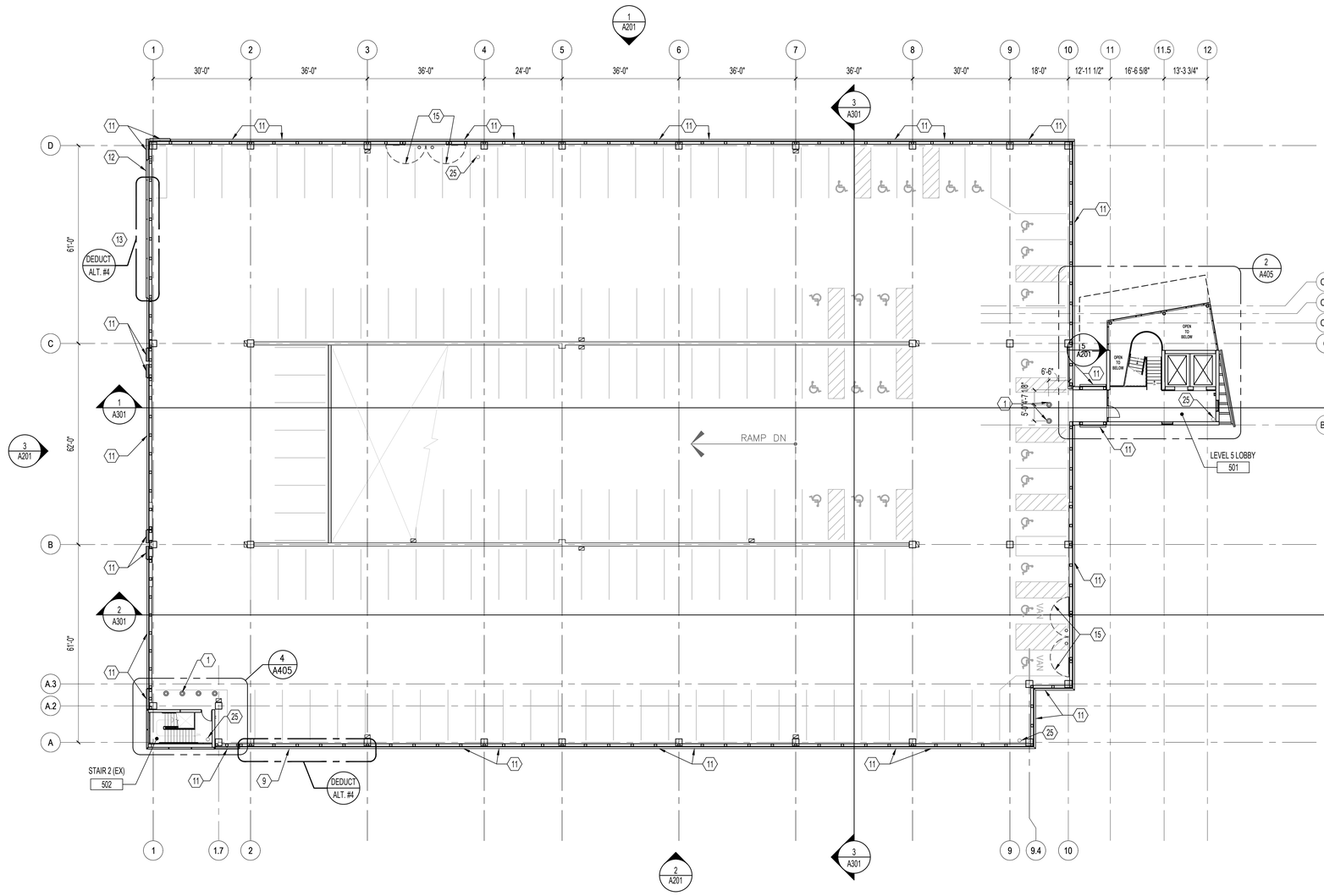

1 OVERALL FLOOR PLAN - LEVEL 5

1/16"=1'-0"

OVERALL FLOOR PLAN GENERAL NOTES

A. REFER TO SHEET G002 FOR BID DEDUCT ALTERNATE DESCRIPTIONS.

B. SEE CIVIL, STRUCTURAL, FIRE PROTECTION, PLUMBING, MECHANICAL AND ELECTRICAL DRAWINGS FOR NEW WORK.

C. SEAL/FIRESTOP ALL OPENINGS IN NEW 1 HR. AND SMOKE RATED PARTITION WALLS AND FLOORS. INCLUDES ALL EXPOSED CONDUIT AND PIPING.

D. INFILL ANY VOIDS IN CONCRETE STRUCTURE, SLAB AND PRECAST SPANDREL PANELS BY DEMOLITION.

(X) OVERALL FLOOR PLAN KEY NOTES

* NOTE: NOT ALL NOTES MAY APPLY TO THIS SHEET.

1. NEW PRE-FABRICATED CONCRETE BOLLARD. BASIS OF DESIGN: THE BELMONT BY STRESSCRETE GROUP. PREP CONCRETE SLAB FOR BASE PLATE MOUNTING WITH ANCHOR BOLTS AS PER MANUFACTURER'S REQUIREMENTS.
2. NEW RETAINING WALL, CONCRETE SIDEWALK, CURBS, ROADWAY AND ASSOCIATED SITE IMPROVEMENTS (FOR SCHEMATIC INTENT ONLY). REFER TO CIVIL DRAWINGS FOR DETAILED S.O.W.
3. NEW CMU WALL CONSTRUCTION - SEE WALL TYPES FOR ADDITIONAL INFORMATION.
4. ALUMINUM LOUVER VENT AND MOTORIZED DAMPER. LOUVER FINISH TO MATCH CURTAIN WALL MULLIONS. REFER TO MECHANICAL DRAWINGS FOR MORE INFORMATION.
5. NEW P.C. CONCRETE COLUMN - SEE STRUCTURAL DRAWINGS.
6. NEW DOOR AND HARDWARE. EXISTING FRAME TO REMAIN TO RECEIVE NEW DOOR. IF FRAME IS DAMAGED AND CANNOT ACCEPT NEW DOOR, REPLACE IN KIND. SEE HARDWARE SCHEDULE. PROVIDE "RESTRICTED ACCESS" OR "VA STAFF ONLY" SIGNAGE - SEE WAYFINDING SHEETS FOR MORE INFORMATION.
7. EXISTING BOLLARD TO REMAIN. REPLACE AS NEEDED DUE TO DAMAGE DURING DEMOLITION / CONSTRUCTION.
8. INFILL PERIMETER OPENINGS BETWEEN PRECAST PANELS AND COLUMNS WITH ALUMINUM ARCHITECTURAL SCREEN SYSTEM (TO MATCH EXISTING IN PROFILE, COLOR & MATERIAL). REFER TO ELEVATIONS AND SECTIONS FOR MORE INFORMATION. BID DEDUCT #6: DELETE SCREEN SYSTEM AT ALL LOCATIONS. ADD PAINTED STEEL RAILING TO MATCH EXISTING AT LEVEL 4 . EXISTING HANDRAIL TO REMAIN AT LEVELS 1, 2 AND 3. ADD MESH FABRIC TO ALL PRECAST OPENINGS AT ALL LEVELS. REFER TO DETAIL 5/A506.
9. INSTALL NEW ALUMINUM ARCHITECTURAL SCREEN SYSTEM WITH VA SIGNAGE. REFER TO EXTERIOR ELEVATIONS AND BID DEDUCT ALTERNATES FOR ADDITIONAL INFORMATION. PROVIDE STRUCTURAL STEEL FRAMING AT LEVEL 5.
10. NOT USED.
11. NEW ALUMINUM ARCHITECTURAL SCREEN SYSTEM TO MATCH EXISTING. INSTALL IN ALIGNMENT WITH EXISTING SYSTEM BELOW. REFER TO ELEVATIONS & WALL SECTIONS FOR ADDITIONAL INFORMATION. PROVIDE STRUCTURAL STEEL FRAMING AT LEVEL 5.
12. NEW CURTAIN WALL SYSTEM TO MATCH EXISTING. INSTALL IN ALIGNMENT WITH EXISTING SYSTEM BELOW. REFER TO ELEVATIONS & WALL SECTIONS FOR ADDITIONAL INFORMATION. PROVIDE STRUCTURAL STEEL FRAMING AT LEVEL 5.
13. PORTION OF NEW CURTAIN WALL SYSTEM AS DEDUCT ALTERNATE #4. REFER TO KEYNOTE 12 FOR CURTAIN WALL INFORMATION.
14. NEW METAL MESH PANELS TO MATCH EXISTING. INSTALL AT ALL OPENINGS OF INTERIOR PRECAST WALLS. REFER TO DETAILS SHEET A504.
15. PROVIDE (2) 6'-0" WIDE STEEL SNOW REMOVAL GATES WITH ALUMINUM ARCHITECTURAL SCREEN SYSTEM (TO MATCH ADJACENT). HEIGHT OF GATES TO ALIGN WITH TOP OF ADJACENT SCREEN SYSTEM. REFER TO DETAILS ON SHEETS A506.
16. ROOF ASSEMBLY R-1. SEE DETAIL 5/A406.
17. PHOTOVOLTAIC CANOPY COVERING ENTIRE UPPER LEVEL. SOLAR PANELS ON METAL Z-CHANNELS ON STEEL SUPPORTS STRUCTURE FOR CANOPY TO BE DELEGATED DESIGN. REFER TO BID DEDUCT ALTERNATES FOR ADDITIONAL INFORMATION.
18. MECHANICAL EQUIPMENT ON MANUFACTURER'S PREFABRICATED ROOF CURB. PROVIDE CURB FLASHING AND ROOF ACCESSORIES AS REQUIRED TO CREATE WATER TIGHT CONDITION AROUND EQUIPMENT. SEE MECHANICAL DRAWINGS FOR ADDITIONAL NOTES.
19. CONCRETE FILLED STEEL BOLLARD, PAINTED. REFER TO CIVIL DRAWINGS AND DETAILS FOR MORE INFORMATION.
20. NEW DOOR, FRAME & SIGNAGE - SEE SCHEDULE.
21. METAL CHAIN LINK FENCE WALL AND GATE INFILL ON TOP OF EXISTING STAIR ENCLOSURE. CHAIN LINK FENCE WALL TO UNDERSIDE OF NEW SLAB. CHAIN LINK FENCE WALL SHALL INCLUDE FABRIC-CHAIN LINK 2" MESH, 9 GAUGE, GALVANIZED WIRE; LINE POSTS - 2 3/8" O.D. GALVANIZED PIPE COMPLETE WITH POST TOPS; TOP RAIL-1 5/8" O.D.GALVANIZED PIPE; TERMINAL POSTS - END, CORNER AND GATE POSTS 3 1/2" O.D. GALVANIZED PIPE; GATE - 1 5/8" O.D. GALVANIZED PIPE, WELDED CONSTRUCTION TO MATCH FENCE WITH INDUSTRIAL STEEL HINGES, DROP PIN LATCH.
22. INFILL / PATCH EXISTING OPENING LEFT FROM REMOVED MECHANICAL EQUIPMENT. REFER TO ENLARGED PLANS FOR MORE INFORMATION.
23. SCUPPER AND DOWNSPOUT. REFER TO PLUMBING DRAWINGS FOR MORE INFORMATION.
24. RESTRICTED ACCESS GATE W/ SIGNAGE. SEE ENLARGED PLANS FOR ADDITIONAL INFORMATION.
25. FIRE STANDPIPE LOCATION. REFER TO PLUMBING DRAWINGS.
26. BOLLARDS, SEE CIVIL FOR DETAILS.
27. CANTILEVERED ALUMINUM SUNSHADE AND ASSOCIATED ANCHOR COMPONENTS TO MATCH EXISTING DEMOLISHED IN KIND. COORDINATE WITH PLANS, ELEVATIONS AND DETAILS.

PARKING GARAGE

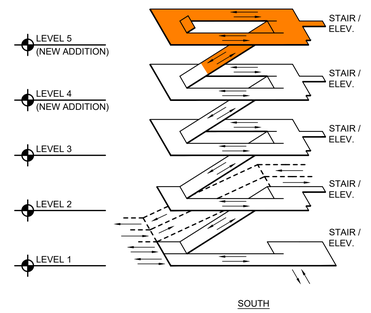

SOUTH

NEW STAIR / ELEVATOR TOWER

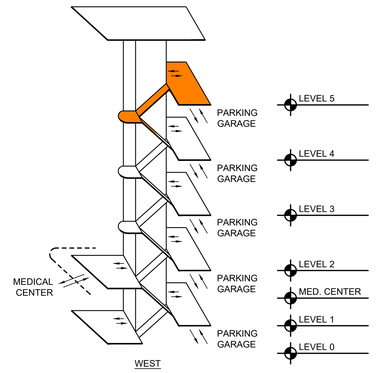

WEST

ISOMETRIC DIAGRAM

NTS

ISSUE FOR BID	08-09-2024
Revisions:	Date:

CONSULTANT

ARCHITECT/ENGINEER OF RECORD

BANCROFT ARCHITECTS + ENGINEERS

3300 Dundee Rd.
Northbrook, IL 60062
T: 847.952.9362
www. bancroft-ae.com

STAMP

LICENSED ARCHITECT CHERYL D. ZAWISLAK 001.016.1 STATE OF ILLINOIS

Office of Construction and Facilities Management

VA U.S. Department of Veterans Affairs

Drawing Title: ARCHITECTURAL- OVERALL FLOOR PLAN - LEVEL 5	Phase: ISSUE FOR BID	Project Title: PARKING RAMP EXPANSION	Project Number: 528-18-375
			Building Number: 29
Approved: Project Director		Location: 3495 BAILEY AVE., BUFFALO, NY 14215	Drawing Number: A105
		Issue Date: 08-09-2024 / Checked: CZ / Drawn: II	

K:\CCG_PROJECTS\2021\21-113 - Parking Ramp (Buffalo, NY)\400- DwtDocs\402- Drawings\WORKING\21-113_A105.dwg

6/14/2009 12:39:03 PM

VA FORM 08 - 6231

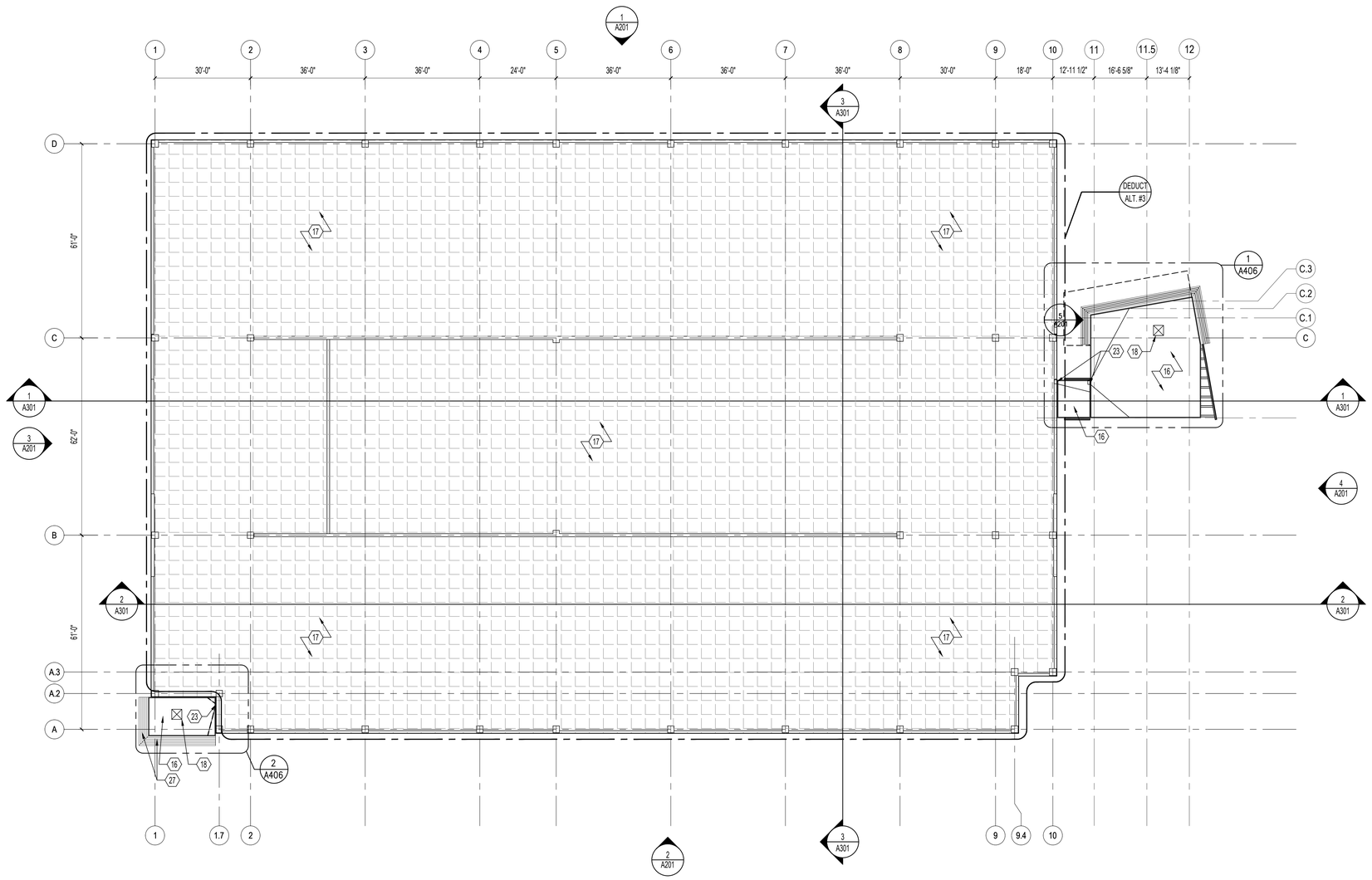

1 OVERALL FLOOR PLAN - ROOF

1/16"=1'-0"

0 4" 8" 16" 32"

OVERALL FLOOR PLAN GENERAL NOTES

A. REFER TO SHEET GI002 FOR BID DEDUCT ALTERNATE DESCRIPTIONS.

B. SEE CIVIL, STRUCTURAL, FIRE PROTECTION, PLUMBING, MECHANICAL AND ELECTRICAL DRAWINGS FOR NEW WORK.

C. SEAL/FIRESTOP ALL OPENINGS IN NEW 1 HR. AND SMOKE RATED PARTITION WALLS AND FLOORS. INCLUDES ALL EXPOSED CONDUIT AND PIPING.

D. INFILL ANY VOIDS IN CONCRETE STRUCTURE, SLAB AND PRECAST SPANDREL PANELS BY DEMOLITION.

(X) OVERALL FLOOR PLAN KEY NOTES

* NOTE: NOT ALL NOTES MAY APPLY TO THIS SHEET.

1. NEW PRE-FABRICATED CONCRETE BOLLARD. BASIS OF DESIGN: THE BELMONT BY STRESSCRETE GROUP. PREP CONCRETE SLAB FOR BASE PLATE MOUNTING WITH ANCHOR BOLTS AS PER MANUFACTURER'S REQUIREMENTS.
2. NEW RETAINING WALL, CONCRETE SIDEWALK, CURBS, ROADWAY AND ASSOCIATED SITE IMPROVEMENTS (FOR SCHEMATIC INTENT ONLY). REFER TO CIVIL DRAWINGS FOR DETAILED S.O.W.
3. NEW CMU WALL CONSTRUCTION - SEE WALL TYPES FOR ADDITIONAL INFORMATION.
4. ALUMINUM LOUVER VENT AND MOTORIZED DAMPER. LOUVER FINISH TO MATCH CURTAIN WALL MULLIONS. REFER TO MECHANICAL DRAWINGS FOR MORE INFORMATION.
5. NEW P.C. CONCRETE COLUMN - SEE STRUCTURAL DRAWINGS.
6. NEW DOOR AND HARDWARE. EXISTING FRAME TO REMAIN TO RECEIVE NEW DOOR. IF FRAME IS DAMAGED AND CANNOT ACCEPT NEW DOOR, REPLACE IN KIND. SEE HARDWARE SCHEDULE. PROVIDE "RESTRICTED ACCESS" OR "VA STAFF ONLY" SIGNAGE - SEE WAYFINDING SHEETS FOR MORE INFORMATION.
7. EXISTING BOLLARD TO REMAIN. REPLACE AS NEEDED DUE TO DAMAGE DURING DEMOLITION / CONSTRUCTION.
8. INFILL PERIMETER OPENINGS BETWEEN PRECAST PANELS AND COLUMNS WITH ALUMINUM ARCHITECTURAL SCREEN SYSTEM (TO MATCH EXISTING IN PROFILE, COLOR & MATERIAL). REFER TO ELEVATIONS AND SECTIONS FOR MORE INFORMATION. BID DEDUCT #6: DELETE SCREEN SYSTEM AT ALL LOCATIONS. ADD PAINTED STEEL RAILING TO MATCH EXISTING AT LEVEL 4 . EXISTING HANDRAIL TO REMAIN AT LEVELS 1, 2 AND 3. ADD MESH FABRIC TO ALL PRECAST OPENINGS AT ALL LEVELS. REFER TO DETAIL 5/A506.
9. INSTALL NEW ALUMINUM ARCHITECTURAL SCREEN SYSTEM WITH VA SIGNAGE. REFER TO EXTERIOR ELEVATIONS AND BID DEDUCT ALTERNATES FOR ADDITIONAL INFORMATION. PROVIDE STRUCTURAL STEEL FRAMING AT LEVEL 5.
10. NOT USED.
11. NEW ALUMINUM ARCHITECTURAL SCREEN SYSTEM TO MATCH EXISTING. INSTALL IN ALIGNMENT WITH EXISTING SYSTEM BELOW. REFER TO ELEVATIONS & WALL SECTIONS FOR ADDITIONAL INFORMATION. PROVIDE STRUCTURAL STEEL FRAMING AT LEVEL 5.
12. NEW CURTAIN WALL SYSTEM TO MATCH EXISTING. INSTALL IN ALIGNMENT WITH EXISTING SYSTEM BELOW. REFER TO ELEVATIONS & WALL SECTIONS FOR ADDITIONAL INFORMATION. PROVIDE STRUCTURAL STEEL FRAMING AT LEVEL 5.
13. PORTION OF NEW CURTAIN WALL SYSTEM AS DEDUCT ALTERNATE #4. REFER TO KEYNOTE 12 FOR CURTAIN WALL INFORMATION.
14. NEW METAL MESH PANELS TO MATCH EXISTING. INSTALL AT ALL OPENINGS OF INTERIOR PRECAST WALLS. REFER TO DETAILS SHEET A504.
15. PROVIDE (2) 6'-0" WIDE STEEL SNOW REMOVAL GATES WITH ALUMINUM ARCHITECTURAL SCREEN SYSTEM (TO MATCH ADJACENT). HEIGHT OF GATES TO ALIGN WITH TOP OF ADJACENT SCREEN SYSTEM. REFER TO DETAILS ON SHEETS A506.
16. ROOF ASSEMBLY R-1. SEE DETAIL 5/A406.
17. PHOTOVOLTAIC CANOPY COVERING ENTIRE UPPER LEVEL. SOLAR PANELS ON METAL Z-CHANNELS ON STEEL SUPPORTS STRUCTURE FOR CANOPY TO BE DELEGATED DESIGN. REFER TO BID DEDUCT ALTERNATES FOR ADDITIONAL INFORMATION.
18. MECHANICAL EQUIPMENT ON MANUFACTURER'S PREFABRICATED ROOF CURB. PROVIDE CURB FLASHING AND ROOF ACCESSORIES AS REQUIRED TO CREATE WATER TIGHT CONDITION AROUND EQUIPMENT. SEE MECHANICAL DRAWINGS FOR ADDITIONAL NOTES.
19. CONCRETE FILLED STEEL BOLLARD, PAINTED. REFER TO CIVIL DRAWINGS AND DETAILS FOR MORE INFORMATION.
20. NEW DOOR, FRAME & SIGNAGE - SEE SCHEDULE.
21. METAL CHAIN LINK FENCE WALL AND GATE INFILL ON TOP OF EXISTING STAIR ENCLOSURE. CHAIN LINK FENCE WALL TO UNDERSIDE OF NEW SLAB. CHAIN LINK FENCE WALL SHALL INCLUDE FABRIC-CHAIN LINK 2" MESH, 9 GAUGE, GALVANIZED WIRE; LINE POSTS - 2 3/8" O.D. GALVANIZED PIPE COMPLETE WITH POST TOPS; TOP RAIL-1 5/8" O.D.GALVANIZED PIPE; TERMINAL POSTS - END, CORNER AND GATE POSTS 3 1/2" O.D. GALVANIZED PIPE; GATE - 1 5/8" O.D. GALVANIZED PIPE, WELDED CONSTRUCTION TO MATCH FENCE WITH INDUSTRIAL STEEL HINGES, DROP PIN LATCH.
22. INFILL / PATCH EXISTING OPENING LEFT FROM REMOVED MECHANICAL EQUIPMENT. REFER TO ENLARGED PLANS FOR MORE INFORMATION.
23. SCUPPER AND DOWNSPOUT. REFER TO PLUMBING DRAWINGS FOR MORE INFORMATION.
24. RESTRICTED ACCESS GATE W/ SIGNAGE. SEE ENLARGED PLANS FOR ADDITIONAL INFORMATION.
25. FIRE STANDPIPE LOCATION. REFER TO PLUMBING DRAWINGS.
26. BOLLARDS. SEE CIVIL FOR DETAILS.
27. CANTILEVERED ALUMINUM SUNSHADE AND ASSOCIATED ANCHOR COMPONENTS TO MATCH EXISTING DEMOLISHED IN KIND. COORDINATE WITH PLANS, ELEVATIONS AND DETAILS.

ISSUE FOR BID	08-09-2024
Revisions:	Date:

CONSULTANT

ARCHITECT/ENGINEER OF RECORD

BANCROFT ARCHITECTS + ENGINEERS
3300 Dundee Rd.
Northbrook, IL 60062
T: 847.952.9362
www. bancroft-ae.com

STAMP

LICENSED ARCHITECT 5-4124 CHETAN D. CHAVAN NY/026/2005 NEW YORK STATE OF ILLINOIS

Office of Construction and Facilities Management

VA U.S. Department of Veterans Affairs

Drawing Title: ARCHITECTURAL- OVERALL FLOOR PLAN - ROOF	Phase: ISSUE FOR BID	Project Title: PARKING RAMP EXPANSION	Project Number: 528-18-375
			Building Number: 29
Approved: Project Director		Location: 3495 BAILEY AVE., BUFFALO, NY 14215	Drawing Number: A106
		Issue Date: 08-09-2024 / Checked: CZ / Drawn: II	

K:\CCO_PROJECTS\2021\21-113 - Parking Ramp (Buffalo, NY)\400- DesDocs\400- Drawings\WORKING\21-113_A106.dwg
6/14/2209 12:39:03 PM

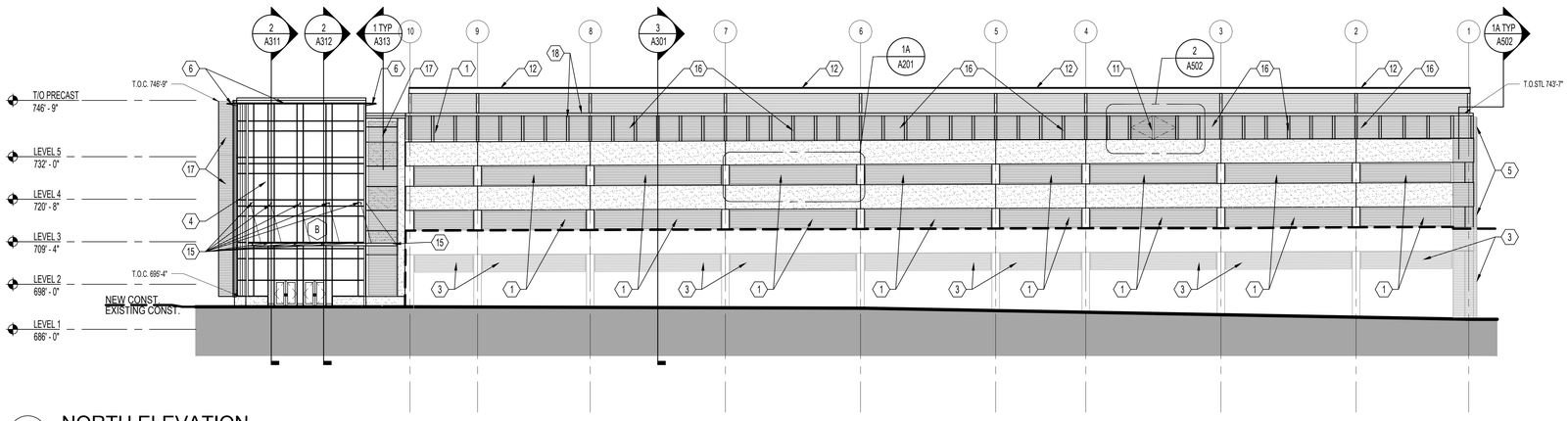

1 NORTH ELEVATION

1/16"=1'-0"

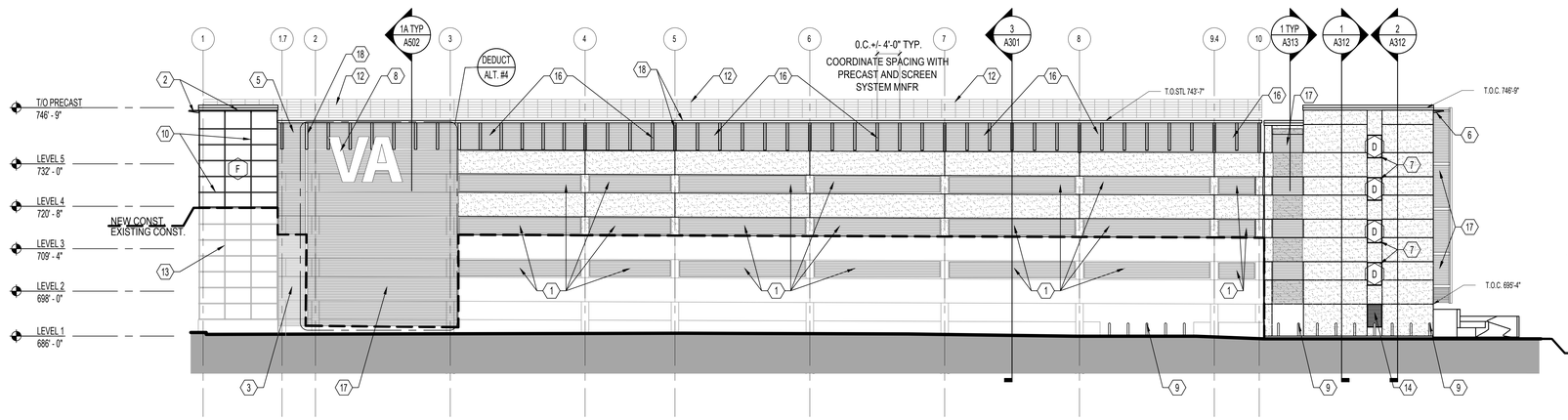

2 SOUTH ELEVATION

1/16"=1'-0"

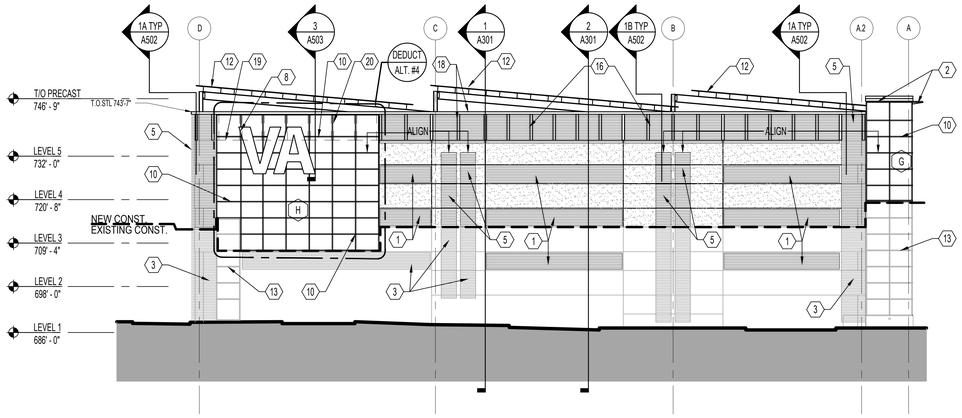

3 WEST ELEVATION

1/16"=1'-0"

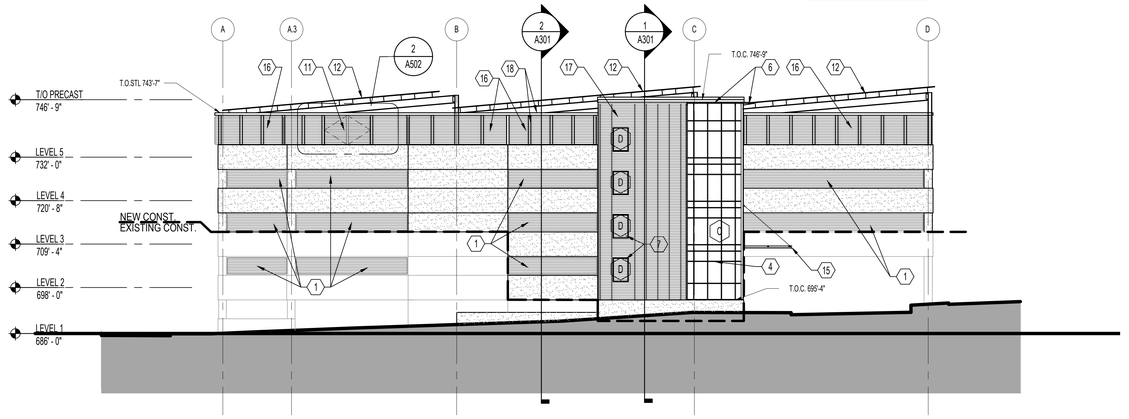

5 WEST PARTIAL ELEVATION

1/16"=1'-0"

4 EAST ELEVATION

1/16"=1'-0"

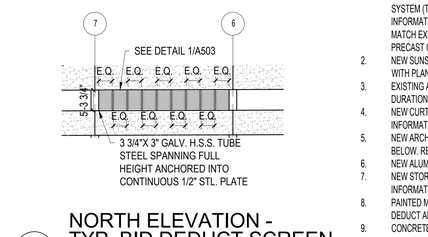

1A NORTH ELEVATION - TYP. BID DEDUCT SCREEN

1/16"=1'-0"

GENERAL ELEVATION NOTES

A. REFER TO SHEET GI002 FOR BID DEDUCT ALTERNATE DESCRIPTIONS & GI003 FOR GENERAL DEMOLITION NOTES.

B. REVIEW THIS DRAWING IN CONJUNCTION WITH CORRESPONDING CIVIL AND STRUCTURAL DRAWINGS.

ELEVATION KEY NOTES

1. INFILL PERIMETER OPENINGS BETWEEN PRECAST PANELS AND COLUMNS WITH ALUMINUM ARCHITECTURAL SCREEN SYSTEM (TO MATCH EXISTING IN PROFILE, COLOR & MATERIAL). REFER TO ELEVATIONS AND SECTIONS FOR MORE INFORMATION. BID DEDUCT #6: DELETE SCREEN SYSTEM AT ALL LOCATIONS. ADD PAINTED STEEL RAILING TO MATCH EXISTING AT LEVEL 4 . EXISTING HANDRAIL TO REMAIN AT LEVELS 1, 2 AND 3. ADD MESH FABRIC TO ALL PRECAST OPENINGS AT ALL LEVELS. REFER TO DETAIL 5/A506.
2. NEW SUNSHADE LOUVER SYSTEM AND ASSOCIATED ANCHOR COMPONENTS TO MATCH EXISTING. COORDINATE WITH PLANS, ELEVATIONS AND DETAILS.
3. EXISTING ARCHITECTURAL SCREEN SYSTEM TO REMAIN. CARE TO BE TAKEN TO PROTECT THROUGHOUT PROJECT DURATION. REPLACE IN KIND AS NEEDED DUE TO DAMAGE DURING DEMO / CONSTRUCTION.
4. NEW CURTAINWALL GLAZING SYSTEM TO MATCH EXISTING. REFER TO GLAZING ELEVATIONS FOR ADDITIONAL INFORMATION.
5. NEW ARCHITECTURAL SCREEN SYSTEM TO MATCH EXISTING. INSTALL IN ALIGNMENT WITH EXISTING SYSTEM BELOW. REFER TO ELEVATIONS FOR TOP OF SCREEN TERMINATION HEIGHT.
6. NEW ALUMINUM SUNSHADE TO MATCH EXISTING IN PROFILE, COLOR AND MATERIAL.
7. NEW STOREFRONT GLAZING SYSTEM TO MATCH EXISTING. SEE GLAZING ELEVATION SHEET FOR ADDITIONAL INFORMATION. REFER TO DEDUCT ALTERNATE #9 FOR PRECAST CONCRETE WALL SUBSTITUTION.
8. PAINTED METAL SIGNAGE MOUNTED TO GLAZING FRAMING OR ARCHITECTURAL SCREEN SYSTEM. REFER TO BID DEDUCT ALTERNATES FOR ADDITIONAL INFORMATION.
9. CONCRETE FILLED STEEL BOLLARD, PAINTED. REFER TO CIVIL DRAWINGS AND DETAILS FOR MORE INFORMATION.
10. NEW CURTAINWALL GLAZING SYSTEM TO MATCH EXISTING. INSTALL IN ALIGNMENT WITH EXISTING SYSTEM BELOW. REFER TO ELEVATIONS AND BID DEDUCT ALTERNATES FOR ADDITIONAL INFORMATION.
11. PROVIDE (2) 6'-0" WIDE TUBE STEEL FRAMED HINGED GATES WITH ARCHITECTURAL SCREEN SYSTEM MOUNTED TO EXTERIOR SIDE (TO ALIGN WITH ADJACENT SYSTEM).
12. BID DEDUCT ALTERNATE PHOTOVOLTAIC CANOPY (COVERING ENTIRE UPPER LEVEL). SOLAR PANELS ON METAL Z-CHANNELS ON STEEL SUPPORT STRUCTURE. STRUCTURE FOR CANOPY TO BE DELEGATED DESIGN. REFER TO BID DEDUCT ALTERNATES FOR ADDITIONAL INFORMATION
13. EXISTING CURTAINWALL SYSTEM TO REMAIN. CARE TO BE TAKEN TO PROTECT THROUGHOUT PROJECT DURATION. REPLACE IN KIND AS NEEDED DUE TO DAMAGE DURING DEMO / CONSTRUCTION.
14. ALUMINUM LOUVER VENT AND MOTORIZED DAMPER. LOUVER FINISH TO MATCH CURTAIN WALL MULLIONS. REFER TO MECHANICAL DRAWINGS FOR MORE INFORMATION.LOUVER DIMENSION, WALL OPENING, AND MOUNTING HEIGHT TO MATCH CURTAIN WALL TYPE D. REFER TO A6 SERIES CURTAIN WALL ELEVATIONS FOR ADDITIONAL INFORMATION.
15. MODULAR AWNING SYSTEM, BASIS OF DESIGN: CONSTRUCTION SPECIALTIES OR VA APPROVED EQUAL.
16. ALUMINUM ARCHITECTURAL SCREEN SYSTEM (TO MATCH EXISTING). PROVIDE STRUCTURAL FRAMING AT LEVEL 5. COORDINATE WITH PRECAST AND SCREEN SYSTEM MANUFACTURER. REFER TO WALL SECTIONS AND DETAILS FOR ADDITIONAL INFORMATION.
17. ALUMINUM ARCHITECTURAL SCREEN SYSTEM. ATTACHMENT TO PRECAST WALL TO BE DELEGATED DESIGN BY SCREEN SYSTEM CONTRACTOR. REFER TO WALL SECTIONS AND DETAILS FOR ADDITIONAL INFORMATION.
18. PROVIDE STRUCTURAL STEEL FRAMING, TYP. COORDINATE WITH PRECAST AND SCREEN SYSTEM MANUFACTURER.
19. B-6 TOP OF PRECAST PANEL.
20. PROVIDE STRUCTURAL STEEL FRAMING AT LEVEL 5 FOR CURTAIN WALL SUPPORT, TYP. COORDINATE WITH PRECAST AND CURTAIN WALL MANUFACTURER. SEE DETAILS FOR INFORMATION.

ISSUE FOR BID	08-09-2024
Revisions:	Date:

CONSULTANT

ARCHITECT/ENGINEER OF RECORD

BANCROFT ARCHITECTS + ENGINEERS
3300 Dundee Rd.
Northbrook, IL 60062
T: 847.952.9362
www. bancroft-ae.com

STAMP

Office of Construction and Facilities Management

VA U.S. Department of Veterans Affairs

Drawing Title	ARCHITECTURAL- EXTERIOR ELEVATIONS
Phase	ISSUE FOR BID
Project Title	PARKING RAMP EXPANSION
Project Number	528-18-375
Building Number	29
Location	3495 BAILEY AVE., BUFFALO, NY 14215
Drawing Number	A201
Approved: Project Director	
Issue Date	08-09-2024
Checked	CZ
Drawn	II

6/14/2009 12:39:03 PM

K:\CCG_PROJECTS\2021\21-113 - Parking Ramp (Buffalo, NY)\400- DesDocs\402- Drawings\WORKING\21-113_A201.dwg

VA FORM 08 - 6231

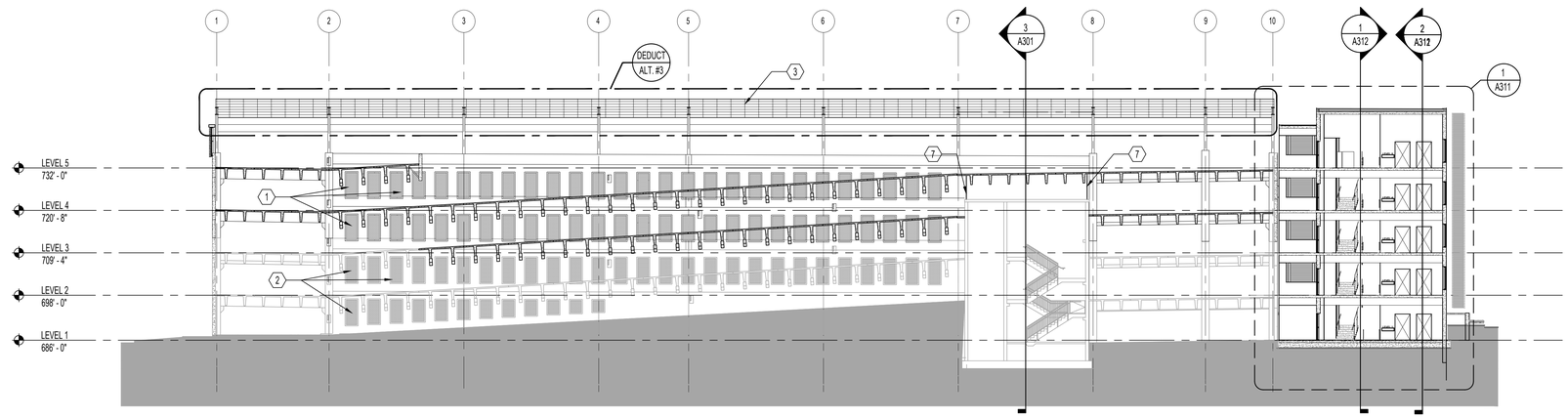

1 BUILDING SECTION

1/16"=1'-0"

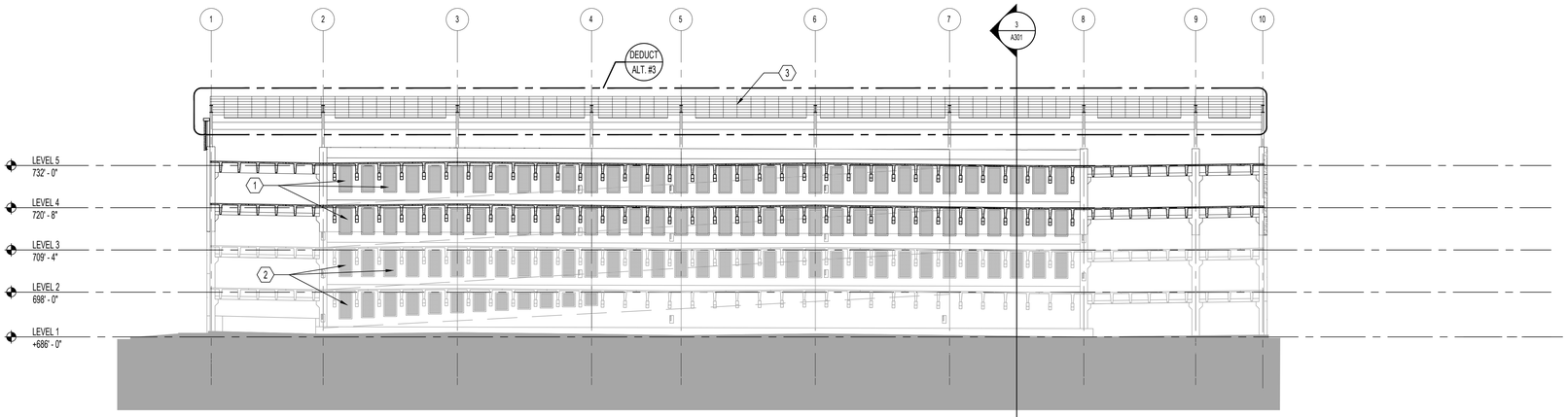

2 BUILDING SECTION

1/16"=1'-0"

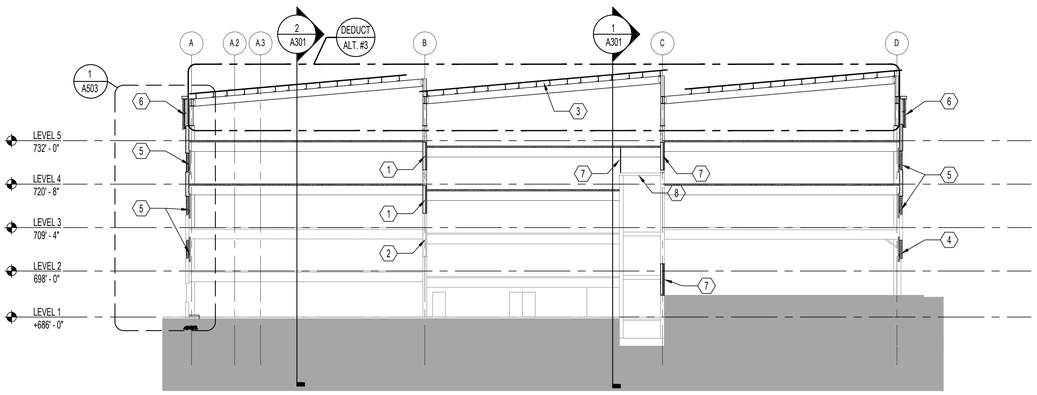

3 BUILDING SECTION

1/16"=1'-0"

BUILDING SECTION NOTES

A. REFER TO SHEET GI002 FOR BID DEDUCT ALTERNATE DESCRIPTIONS & GI003 FOR GENERAL DEMOLITION NOTES.

B. REVIEW THIS DRAWING IN CONJUNCTION WITH CORRESPONDING CIVIL AND STRUCTURAL DRAWINGS.

BUILDING SECTION KEY NOTES

1. NEW METAL MESH SCREENS IN OPENING OF INNER PRECAST PANELS. SCREENS TO MATCH EXISTING. REFER A5 SERIES DETAILS FOR ADDITIONAL INFORMATION.
2. EXISTING METAL MESH SCREEN TO REMAIN.
3. BID DEDUCT ALTERNATE PHOTOVOLACTIC SOLAR CANOPY. SOLAR PANELS MOUNTED TO STEEL ZEE CHANNELS ON WIDE FLANGE STEEL STRUCTURE. STRUCTURE FOR CANOPY TO BE DELEGATED DESIGN BY SOLAR CANOPY CONTRACTOR.
4. EXISTING ARCHITECTURAL SCREEN SYSTEM TO REMAIN. CARE TO BE TAKEN TO PROTECT THROUGHOUT PROJECT DURATION. REPLACE IN KIND AS NEEDED DUE TO DAMAGE DURING DEMO / CONSTRUCTION.
5. NEW ALUMINUM ARCHITECTURAL SCREEN SYSTEM (TO MATCH EXISTING) INFILL BETWEEN PRECAST WALL PANELS AND COLUMNS. PROVIDE STRUCTURAL STEEL FRAMING AT LEVEL 5. REFER TO DEDUCT ALTERNATE #6 FOR ALL INFILL LOCATIONS.
6. NEW ALUMINUM ARCHITECTURAL SCREEN SYSTEM TO MATCH EXISTING IN PROFILE, COLOR AND MATERIAL. PROVIDE STRUCTURAL STEEL FRAMING AT LEVEL 5 .
7. AT TOP OF EXISTING STAIR ENCLOSURE WALLS, INFILL WITH METAL CHAIN LINK FENCE WITH GATE TO UNDERSIDE OF NEW SLAB.
8. TOP OF EXISTING STAIR TO REMAIN.

ISSUE FOR BID	08-09-2024
Revisions:	Date:

CONSULTANT

ARCHITECT/ENGINEER OF RECORD

3300 Dundee Rd.
Northbrook, IL 60062
T: 847.952.9362
www. bancroft-ae.com
BANCROFT ARCHITECTS + ENGINEERS

STAMP

LICENSED ARCHITECT CRISTIAN D. CAZACIUC 401029855 STATE OF ILLINOIS

Office of Construction and Facilities Management

VA U.S. Department of Veterans Affairs

Drawing Title: ARCHITECTURAL- BUILDING SECTIONS	Phase: ISSUE FOR BID	Project Title: PARKING RAMP EXPANSION	Project Number: 528-18-375
			Building Number: 29
Approved: Project Director		Location: 3495 BAILEY AVE., BUFFALO, NY 14215	Drawing Number: A301
		Issue Date: 08-09-2024 / Checked: CZ / Drawn: II	

K:\CCG_PROJECTS\2021\21-113 - Parking Ramp (Buffalo, NY)\400- Des\Docs\402- Drawings\WORKING\21-113_A301.dwg
6/14/2099 12:39:03 PM

VA FORM 08 - 6231

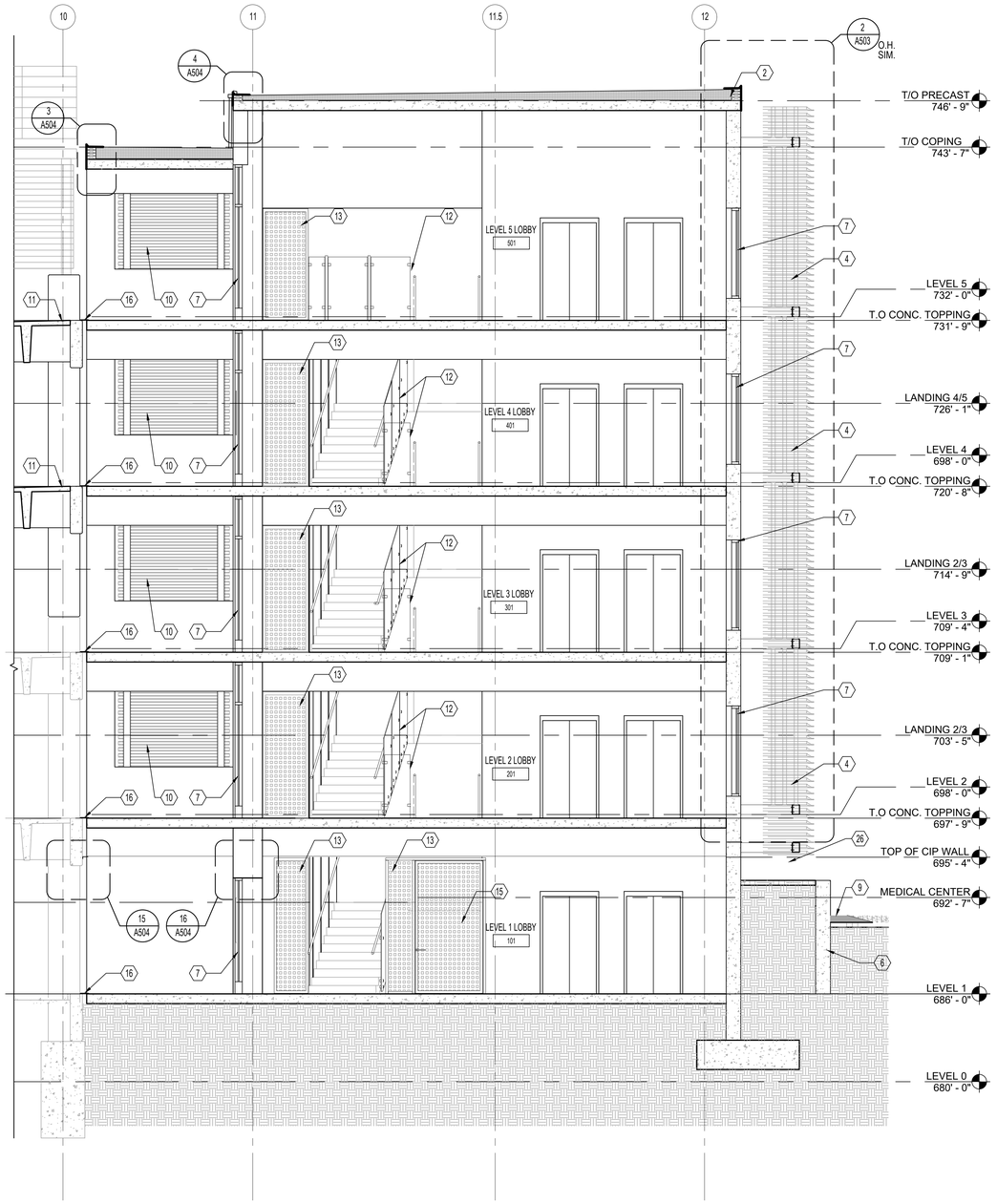

1 PARTIAL BUILDING SECTION - LOOKING NORTH
1/4"=1'-0"

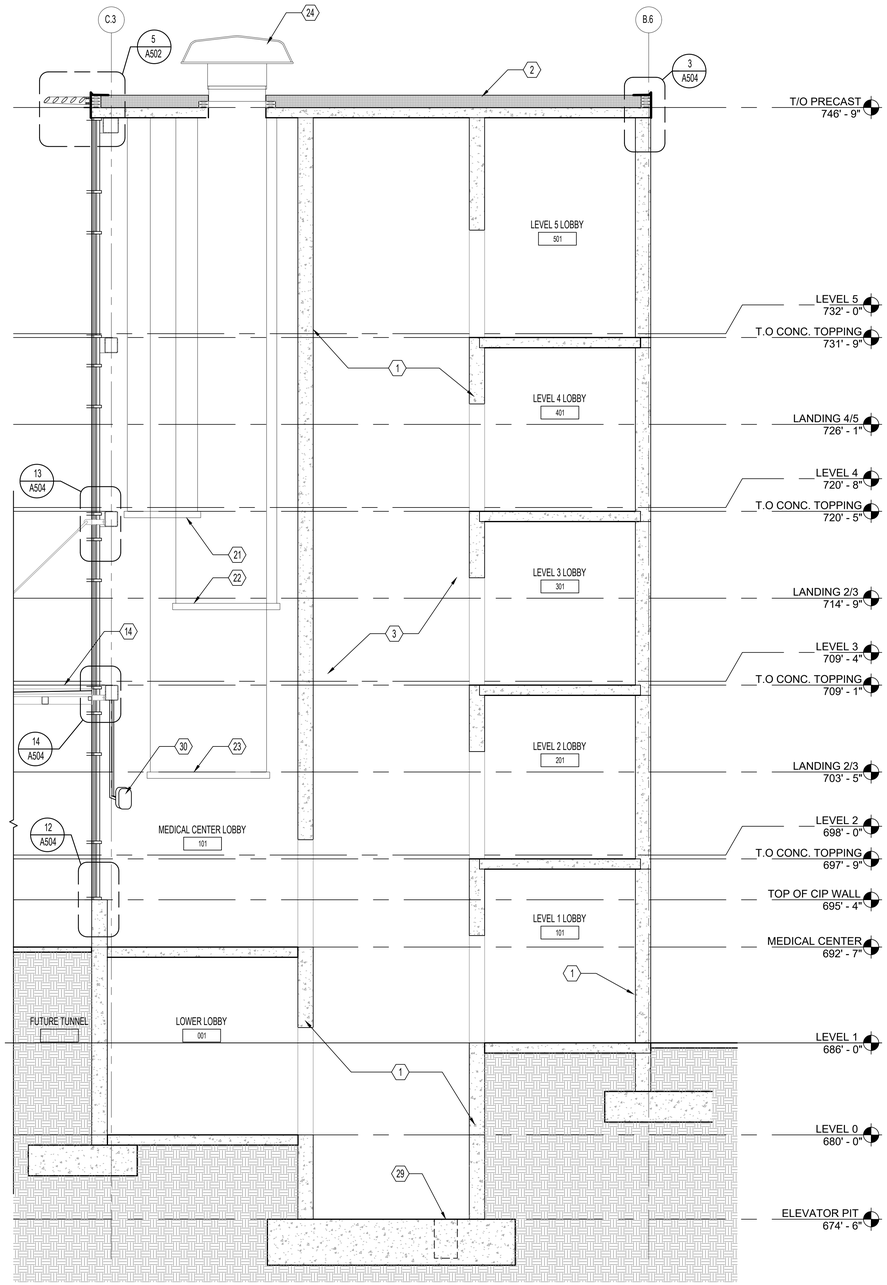

2 PARTIAL BUILDING SECTION - LOOKING EAST
1/4"=1'-0"

PARTIAL SECTION NOTES

A. REFER TO SHEET GI002 FOR BID DEDUCT ALTERNATE DESCRIPTIONS & GI003 FOR GENERAL DEMOLITION NOTES.

B. REVIEW THIS DRAWING IN CONJUNCTION WITH CORRESPONDING CIVIL AND STRUCTURAL DRAWINGS.

PARTIAL SECTION KEY NOTES

1. PRECAST CONCRETE STRUCTURE AND FLOOR PLANKS WITH CONCRETE TOPPING, TYPICAL. REFER TO STRUCTURAL DRAWINGS.
2. EPDM ROOF OVER TAPERED INSULATION. SLOPE TO SCUPPER AND DOWNSPOUT. REFER TO ROOF PLANS.
3. MACHINE-ROOM-LESS TRACTION ELEVATOR.
4. METAL SUN SHADE LOUVERS.
5. PRECAST CONCRETE WALLS, TYPICAL. REFER TO STRUCTURAL DRAWINGS.
6. CAST IN PLACE CONCRETE WALLS AT LOCATIONS BELOW GRADE, TYPICAL. REFER TO STRUCTURAL DRAWINGS.
7. 2" X 6" THERMALLY BROKEN STOREFRONT SYSTEM WITH 1" INSULATED GLAZING. MATCH EXISTING STOREFRONT AND GLAZING IN TYPE, STYLE AND FINISH.
8. PRECAST CONCRETE STAIRS, TYPICAL. REFER TO STRUCTURAL DRAWINGS.
9. ADJACENT SITE WORK. REFER TO ARCHITECTURAL AND CIVIL SITE DRAWINGS.
10. ALUM.ARCHITECTURAL SCREEN SYSTEM(TO MATCH EXISTING) SURFACE-MOUNTED ON PRECAST PANELS, COORDINATE ATTACHMENT BETWEEN PRECAST AND SCREEN SYSTEM MANUFACTURER.
11. NEW PRECAST CONCRETE TEES, REFER STRUCTURAL DRAWINGS.
12. METAL AND GLASS RAILING. REFER TO A505 FOR ADDITIONAL INFORMATION.
13. PERFORATED METAL SCREEN WALL.SEE A601 FOR FINISHES.
14. TIE-BACK CANOPY; BASIS OF DESIGN: MODULAR AWNING BY CONSTRUCTION SPECIALTIES OR VA APPROVED EQUAL.
15. RESTRICTED ACCESS GATE.
16. STAINLESS STEEL EXPANSION JOINT COVER WITH ANTI-SLIP FILLER AND BEVELED EDGES. ANCHOR WITH COUNTERSUNK ANCHORS IN BED OF MASTIC.
17. CONCRETE SIDEWALK. REFER TO CIVIL DRAWINGS.
18. AREA FOR BIKE RACKS. REFER TO CIVIL DRAWINGS.
19. ROCK GROUND COVER.
20. PARKING LOT. REFER TO CIVIL DRAWINGS.
21. 5'-0" DIA. DECORATIVE LIGHT FIXTURE HUNG FROM PRECAST ROOF DECK ABOVE. MOUNT BOTTOM OF FIXTURE AT 28'-0" A.F.F. REFER TO ELECTRICAL DRAWINGS FOR ADDITIONAL INFORMATION.
22. 12'-0" DIA. DECORATIVE LIGHT FIXTURE HUNG FROM PRECAST ROOF DECK ABOVE. MOUNT BOTTOM OF FIXTURE AT 22'-0" A.F.F. REFER TO ELECTRICAL DRAWINGS FOR ADDITIONAL INFORMATION.
23. 8'-0" DIA. DECORATIVE LIGHT FIXTURE HUNG FROM PRECAST ROOF DECK ABOVE. MOUNT BOTTOM OF FIXTURE AT 11'-0" A.F.F. REFER TO ELECTRICAL DRAWINGS FOR ADDITIONAL INFORMATION.
24. MECHANICAL EQUIPMENT ON MANUFACTURER'S PREFABRICATED ROOF CURB. PROVIDE BLOCKING, FLASHING, AND OTHER ROOF ACCESSORIES AS REQUIRED TO PROVIDE WATERTIGHT CONDITION AT AND AROUND CURB AND EQUIPMENT. SEE MECHANICAL DRAWINGS FOR ADDITIONAL INFORMATION.
25. ALUMINUM LOUVER VENT AND MOTORIZED DAMPER. LOUVER FINISH TO MATCH CURTAIN WALL MULLIONS. REFER TO MECHANICAL DRAWINGS FOR MORE INFORMATION.
26. PLANTER BED, REFER TO CIVIL DRAWINGS FOR ADDITIONAL INFORMATION.
27. NOT USED.
28. STEEL RESTRICTED ACCESS GATE. FINISH SHALL MATCH PERFORATED METAL SCREEN WALL. REFER TO A401 FOR ADDITIONAL INFORMATION.
29. SUMP BASIN. SEE PLUMBING DRAWINGS FOR FURTHER INFORMATION.
30. ELECTRIC HEATER. MOUNT BOTTOM OF HEATER AT 9'-0" A.F.F. SEE MECHANICAL DRAWINGS FOR FURTHER INFORMATION.

ISSUE FOR BID	**08-09-2024**
Revisions:	**Date:**

CONSULTANT

ARCHITECT/ENGINEER OF RECORD

BANCROFT ARCHITECTS + ENGINEERS
3300 Dundee Rd.
Northbrook, IL 60062
T: 847.952.9362
www.bancroft-ae.com

STAMP

LICENSED ARCHITECT CRISTIAN D. ZAMFIRUS 031905 STATE OF NEW YORK 8/12/24

Office of Construction and Facilities Management

VA U.S. Department of Veterans Affairs

Drawing Title ARCHITECTURAL- PARTIAL BUILDING SECTIONS	**Phase** ISSUE FOR BID	**Project Title** PARKING RAMP EXPANSION	**Project Number** 528-18-375
			Building Number 29
Approved: Project Director		**Location** 3495 BAILEY AVE., BUFFALO, NY 14215	**Drawing Number** A311
		Issue Date 08-09-2024 / **Checked** CZ / **Drawn** II	

K:\CCG_PROJECTS\2021\21-113 - Parking Ramp (Buffalo, NY)\400- DesiDocs\402- Drawings\WORKING\21-113_A311.dwg
6/14/2009 12:39:03 PM

VA FORM 08 - 6231

PARTIAL SECTION NOTES

A. REFER TO SHEET GI002 FOR BID DEDUCT ALTERNATE DESCRIPTIONS & GI003 FOR GENERAL DEMOLITION NOTES.

B. REVIEW THIS DRAWING IN CONJUNCTION WITH CORRESPONDING CIVIL AND STRUCTURAL DRAWINGS.

⟨X⟩ PARTIAL SECTION KEY NOTES

1. PRECAST CONCRETE STRUCTURE AND FLOOR PLANKS WITH CONCRETE TOPPING, TYPICAL. REFER TO STRUCTURAL DRAWINGS.
2. EPDM ROOF OVER TAPERED INSULATION. SLOPE TO SCUPPER AND DOWNSPOUT. REFER TO ROOF PLANS.
3. MACHINE-ROOM-LESS TRACTION ELEVATOR.
4. METAL SUN SHADE LOUVERS.
5. PRECAST CONCRETE WALLS, TYPICAL. REFER TO STRUCTURAL DRAWINGS.
6. CAST IN PLACE CONCRETE WALLS AT LOCATIONS BELOW GRADE, TYPICAL. REFER TO STRUCTURAL DRAWINGS.
7. 2" X 6" THERMALLY BROKEN STOREFRONT SYSTEM WITH 1" INSULATED GLAZING. MATCH EXISTING STOREFRONT AND GLAZING IN TYPE, STYLE AND FINISH.
8. PRECAST CONCRETE STAIRS, TYPICAL. REFER TO STRUCTURAL DRAWINGS.
9. ADJACENT SITE WORK. REFER TO ARCHITECTURAL AND CIVIL SITE DRAWINGS.
10. ALUM.ARCHITECTURAL SCREEN SYSTEM(TO MATCH EXISTING) SURFACE-MOUNTED ON PRECAST PANELS, COORDINATE ATTACHMENT BETWEEN PRECAST AND SCREEN SYSTEM MANUFACTURER.
11. NEW PRECAST CONCRETE TEES. REFER STRUCTURAL DRAWINGS.
12. METAL AND GLASS RAILING. REFER TO A505 FOR ADDITIONAL INFORMATION.
13. PERFORATED METAL SCREEN WALL SEE A601 FOR FINISHES.
14. TIE-BACK CANOPY; BASIS OF DESIGN: MODULAR AWNING BY CONSTRUCTION SPECIALTIES OR VA APPROVED EQUAL.
15. RESTRICTED ACCESS GATE.
16. STAINLESS STEEL EXPANSION JOINT COVER WITH ANTI-SLIP FILLER AND BEVELED EDGES. ANCHOR WITH COUNTERSUNK ANCHORS IN BED OF MASTIC.
17. CONCRETE SIDEWALK. REFER TO CIVIL DRAWINGS.
18. AREA FOR BIKE RACKS. REFER TO CIVIL DRAWINGS.
19. ROCK GROUND COVER.
20. PARKING LOT. REFER TO CIVIL DRAWINGS.
21. 5'-0" DIA. DECORATIVE LIGHT FIXTURE HUNG FROM PRECAST ROOF DECK ABOVE. MOUNT BOTTOM OF FIXTURE AT 28'-0" A.F.F. REFER TO ELECTRICAL DRAWINGS FOR ADDITIONAL INFORMATION.
22. 12'-0" DIA. DECORATIVE LIGHT FIXTURE HUNG FROM PRECAST ROOF DECK ABOVE. MOUNT BOTTOM OF FIXTURE AT 22'-0" A.F.F. REFER TO ELECTRICAL DRAWINGS FOR ADDITIONAL INFORMATION.
23. 8'-0" DIA. DECORATIVE LIGHT FIXTURE HUNG FROM PRECAST ROOF DECK ABOVE. MOUNT BOTTOM OF FIXTURE AT 11'-0" A.F.F. REFER TO ELECTRICAL DRAWINGS FOR ADDITIONAL INFORMATION.
24. MECHANICAL EQUIPMENT ON MANUFACTURER'S PREFABRICATED ROOF CURB. PROVIDE BLOCKING, FLASHING, AND OTHER ROOF ACCESSORIES AS REQUIRED TO PROVIDE WATERTIGHT CONDITION AT AND AROUND CURB AND EQUIPMENT. SEE MECHANICAL DRAWINGS FOR ADDITIONAL INFORMATION.
25. ALUMINUM LOUVER VENT AND MOTORIZED DAMPER. LOUVER FINISH TO MATCH CURTAIN WALL MULLIONS. REFER TO MECHANICAL DRAWINGS FOR MORE INFORMATION.
26. PLANTER BED, REFER TO CIVIL DRAWINGS FOR ADDITIONAL INFORMATION.
27. NOT USED.
28. STEEL RESTRICTED ACCESS GATE. FINISH SHALL MATCH PERFORATED METAL SCREEN WALL. REFER TO A401 FOR ADDITIONAL INFORMATION.

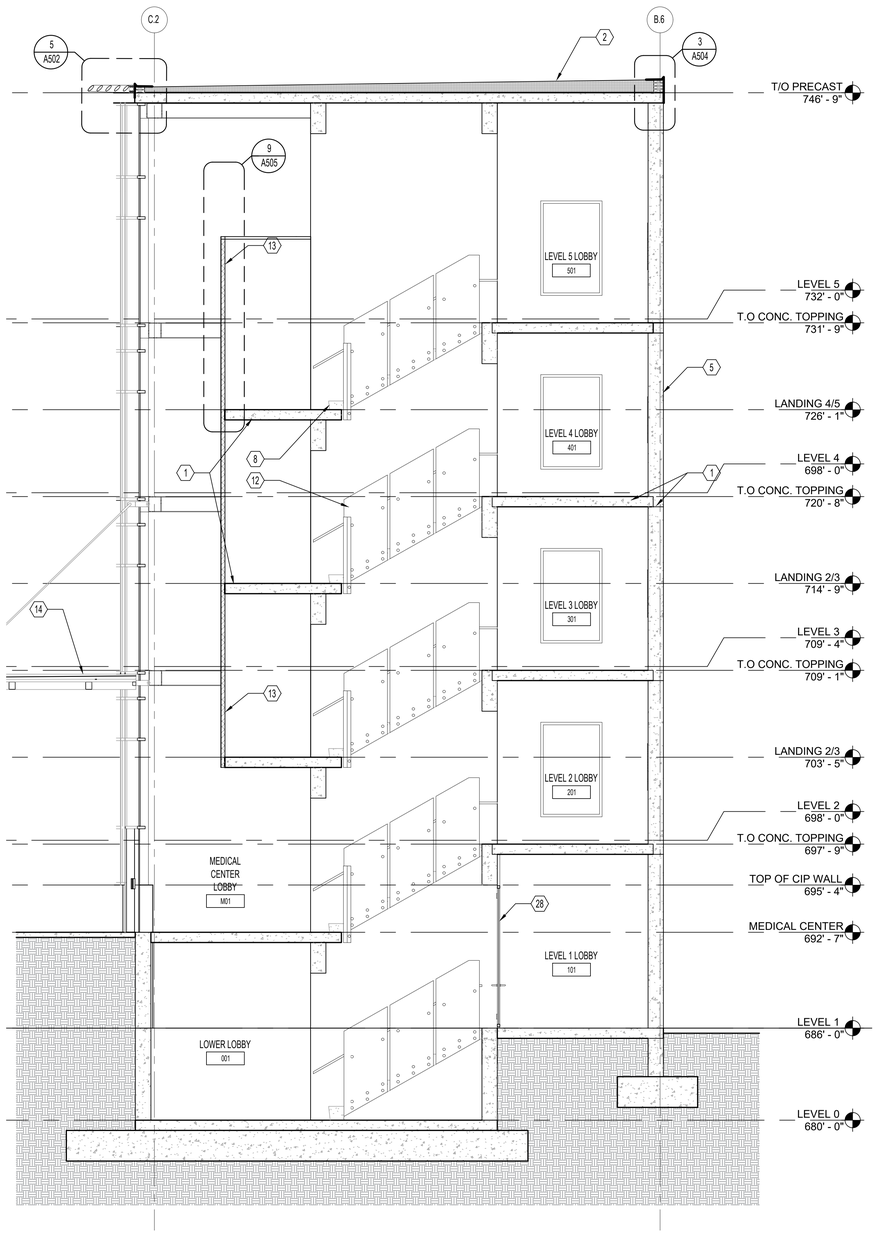

1 PARTIAL BUILDING SECTION - LOOKING EAST

1/4"=1'-0"

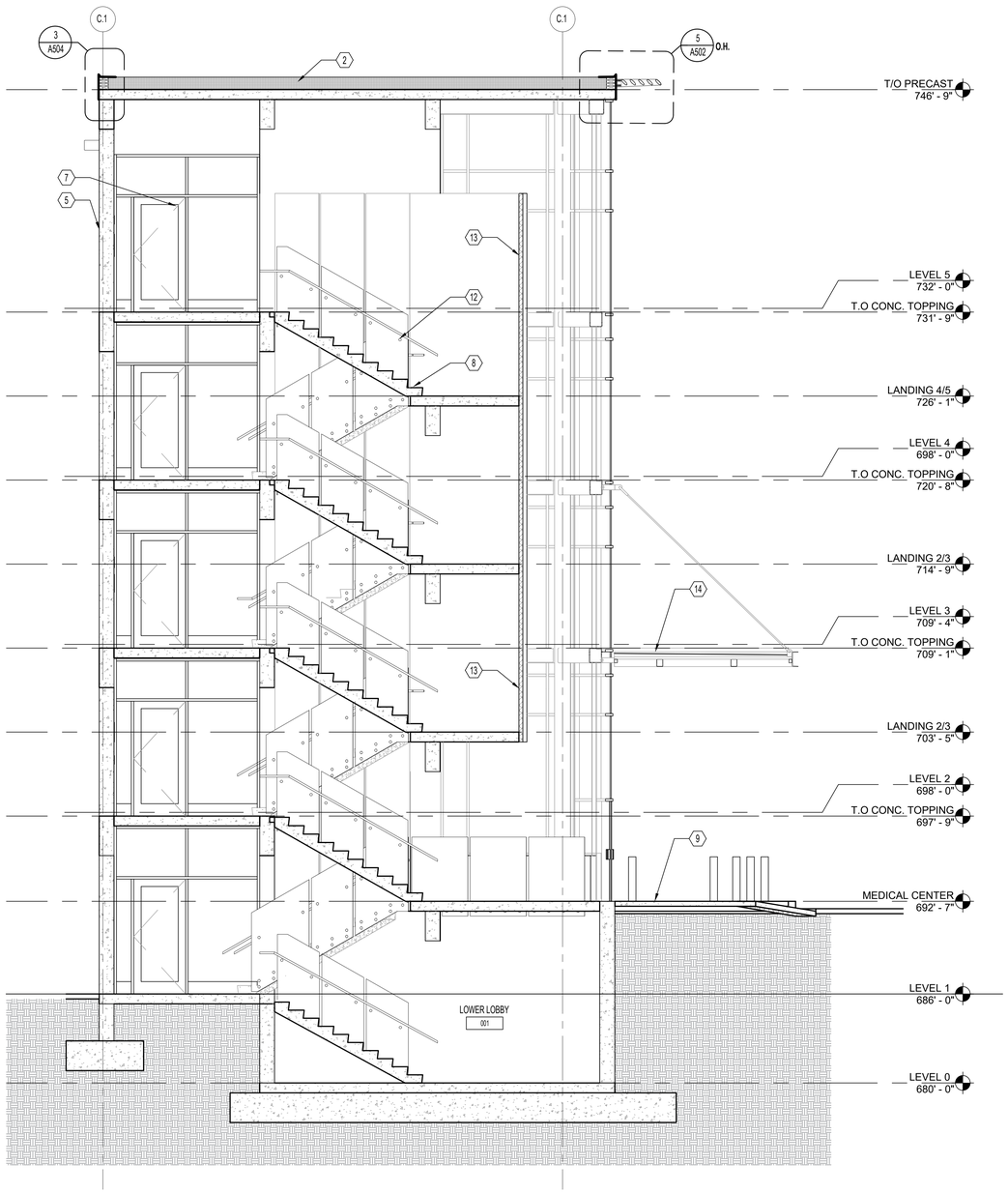

2 PARTIAL BUILDING SECTION - LOOKING WEST

1/4"=1'-0"

ISSUE FOR BID	08-09-2024
Revisions:	Date:

CONSULTANT

ARCHITECT/ENGINEER OF RECORD

BANCROFT ARCHITECTS + ENGINEERS

3300 Dundee Rd.
Northbrook, IL 60062
T: 847.952.9362
www. bancroft-ae.com

STAMP

LICENSED ARCHITECT 01123 CRISTINA D. ZAMARRIPA MY COMMISSION EXPIRES 11/30/2025 STATE OF ILLINOIS

Office of Construction and Facilities Management

VA U.S. Department of Veterans Affairs

Drawing Title: ARCHITECTURAL- PARTIAL BUILDING SECTIONS	Phase: ISSUE FOR BID	Project Title: PARKING RAMP EXPANSION	Project Number: 528-18-375
Approved: Project Director		Location: 3495 BAILEY AVE., BUFFALO, NY 14215	Building Number: 29
		Issue Date: 08-09-2024 / Checked: CZ / Drawn: II	Drawing Number: A312

6/14/2099 12:39:03 PM

K:\CCG_PROJECTS\2021\21-113 - Parking Ramp (Buffalo, NY)\400- DesDocs\402- Drawings\WORKING\21-113_A312.dwg

VA FORM 08 - 6231

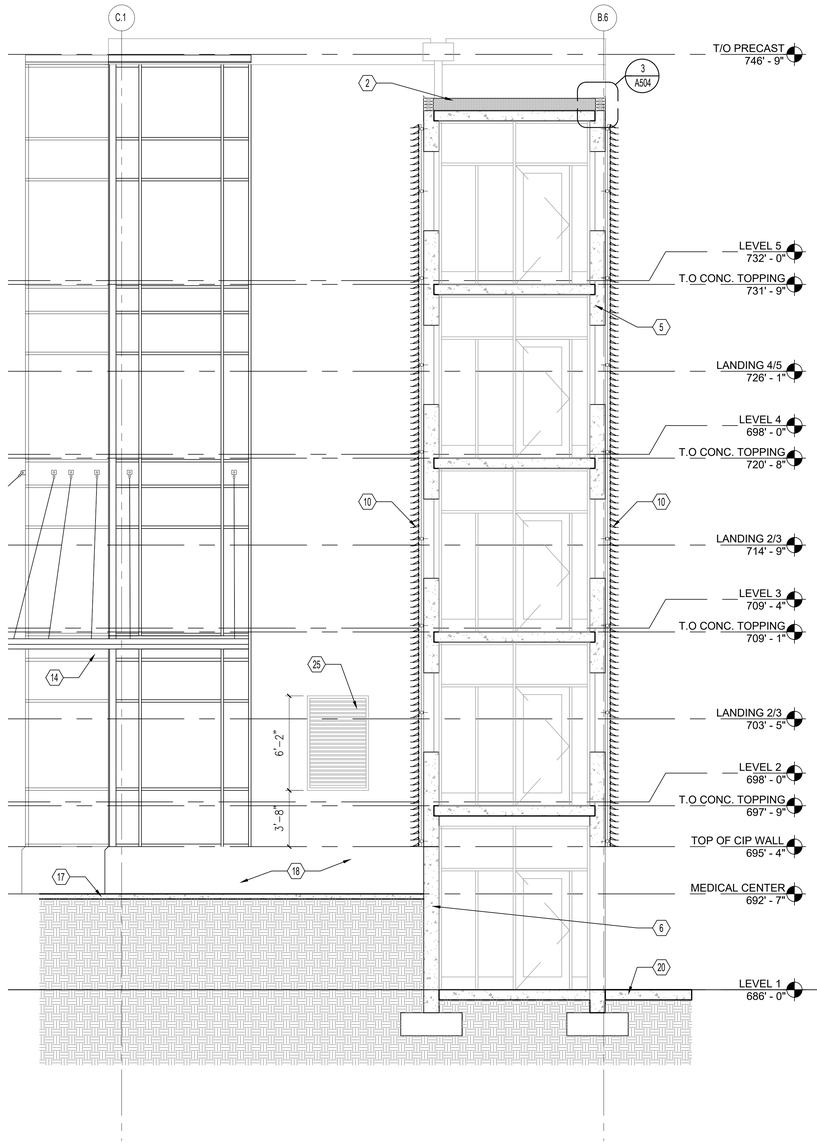

1 WALL SECTION - LOOKING EAST
1/4"=1'-0"

0 2" 4" 6" 8"

PARTIAL SECTION NOTES

A. REFER TO SHEET GI002 FOR BID DEDUCT ALTERNATE DESCRIPTIONS & GI003 FOR GENERAL DEMOLITION NOTES.

B. REVIEW THIS DRAWING IN CONJUNCTION WITH CORRESPONDING CIVIL AND STRUCTURAL DRAWINGS.

(X) PARTIAL SECTION KEY NOTES

1. PRECAST CONCRETE STRUCTURE AND FLOOR PLANKS WITH CONCRETE TOPPING, TYPICAL. REFER TO STRUCTURAL DRAWINGS.
2. EPDM ROOF OVER TAPERED INSULATION. SLOPE TO SCUPPER AND DOWNSPOUT. REFER TO ROOF PLANS.
3. MACHINE-ROOM-LESS TRACTION ELEVATOR.
4. METAL SUN SHADE LOUVERS.
5. PRECAST CONCRETE WALLS, TYPICAL. REFER TO STRUCTURAL DRAWINGS.
6. CAST IN PLACE CONCRETE WALLS AT LOCATIONS BELOW GRADE, TYPICAL. REFER TO STRUCTURAL DRAWINGS.
7. 2" X 6" THERMALLY BROKEN STOREFRONT SYSTEM WITH 1" INSULATED GLAZING. MATCH EXISTING STOREFRONT AND GLAZING IN TYPE, STYLE AND FINISH.
8. PRECAST CONCRETE STAIRS, TYPICAL. REFER TO STRUCTURAL DRAWINGS.
9. ADJACENT SITE WORK. REFER TO ARCHITECTURAL AND CIVIL SITE DRAWINGS.
10. ALUM.ARCHITECTURAL SCREEN SYSTEM(TO MATCH EXISTING) SURFACE-MOUNTED ON PRECAST PANELS, COORDINATE ATTACHMENT BETWEEN PRECAST AND SCREEN SYSTEM MANUFACTURER.
11. NEW PRECAST CONCRETE TEES, REFER STRUCTURAL DRAWINGS.
12. METAL AND GLASS RAILING. REFER TO A505 FOR ADDITIONAL INFORMATION.
13. PERFORATED METAL SCREEN WALL SEE A601 FOR FINISHES.
14. TIE-BACK CANOPY. BASIS OF DESIGN: MODULAR AWNING BY CONSTRUCTION SPECIALTIES OR VA APPROVED EQUAL.
15. RESTRICTED ACCESS GATE.
16. STAINLESS STEEL EXPANSION JOINT COVER WITH ANTI-SLIP FILLER AND BEVELED EDGES. ANCHOR WITH COUNTERSUNK ANCHORS IN BED OF MASTIC.
17. CONCRETE SIDEWALK. REFER TO CIVIL DRAWINGS.
18. AREA FOR BIKE RACKS. REFER TO CIVIL DRAWINGS.
19. ROCK GROUND COVER.
20. PARKING LOT. REFER TO CIVIL DRAWINGS.
21. 5'-0" DIA. DECORATIVE LIGHT FIXTURE HUNG FROM PRECAST ROOF DECK ABOVE. MOUNT BOTTOM OF FIXTURE AT 28'-0" A.F.F. REFER TO ELECTRICAL DRAWINGS FOR ADDITIONAL INFORMATION.
22. 12'-0" DIA. DECORATIVE LIGHT FIXTURE HUNG FROM PRECAST ROOF DECK ABOVE. MOUNT BOTTOM OF FIXTURE AT 22'-0" A.F.F. REFER TO ELECTRICAL DRAWINGS FOR ADDITIONAL INFORMATION.
23. 8'-0" DIA. DECORATIVE LIGHT FIXTURE HUNG FROM PRECAST ROOF DECK ABOVE. MOUNT BOTTOM OF FIXTURE AT 11'-0" A.F.F. REFER TO ELECTRICAL DRAWINGS FOR ADDITIONAL INFORMATION.
24. MECHANICAL EQUIPMENT ON MANUFACTURER'S PREFABRICATED ROOF CURB. PROVIDE BLOCKING, FLASHING, AND OTHER ROOF ACCESSORIES AS REQUIRED TO PROVIDE WATERTIGHT CONDITION AT AND AROUND CURB AND EQUIPMENT. SEE MECHANICAL DRAWINGS FOR ADDITIONAL INFORMATION.
25. ALUMINUM LOUVER VENT AND MOTORIZED DAMPER. LOUVER FINISH TO MATCH CURTAIN WALL MULLIONS. REFER TO MECHANICAL DRAWINGS FOR MORE INFORMATION.
26. PLANTER BED, REFER TO CIVIL DRAWINGS FOR ADDITIONAL INFORMATION.
27. NOT USED.
28. STEEL RESTRICTED ACCESS GATE. FINISH SHALL MATCH PERFORATED METAL SCREEN WALL. REFER TO A401 FOR ADDITIONAL INFORMATION.

ISSUE FOR BID	08-09-2024
Revisions:	Date:

CONSULTANT

ARCHITECT/ENGINEER OF RECORD

BANCROFT ARCHITECTS + ENGINEERS
3300 Dundee Rd.
Northbrook, IL 60062
T: 847.952.9362
www.bancroft-ae.com

STAMP

LICENSED ARCHITECT 01/1/23 CRISTINA D. ZAMARRIPA 001.020.1121 EXPIRES: 11/30/2024 STATE OF ILLINOIS

Office of Construction and Facilities Management

VA U.S. Department of Veterans Affairs

Drawing Title: ARCHITECTURAL- WALL SECTIONS

Phase: ISSUE FOR BID

Project Title: PARKING RAMP EXPANSION

Project Number: 528-18-375

Building Number: 29

Approved: Project Director

Location: 3495 BAILEY AVE., BUFFALO, NY 14215

Issue Date: 08-09-2024

Checked: CZ

Drawn: II

Drawing Number: A313

K:\CCG_PROJECTS\2021\21-113 - Parking Ramp (Buffalo, NY)\400- DesDocs\402- Drawings\WORKING\21-113_A313.dwg

6/14/2099 12:39:03 PM

VA FORM 08 - 6231

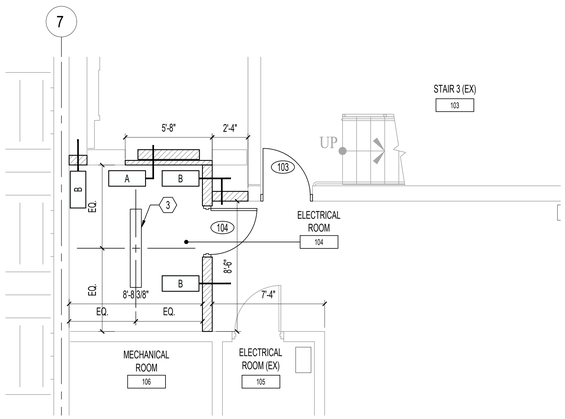

N

5 ENLARGED FLOOR & RCP - LEVEL 1

1/4"=1'-0"

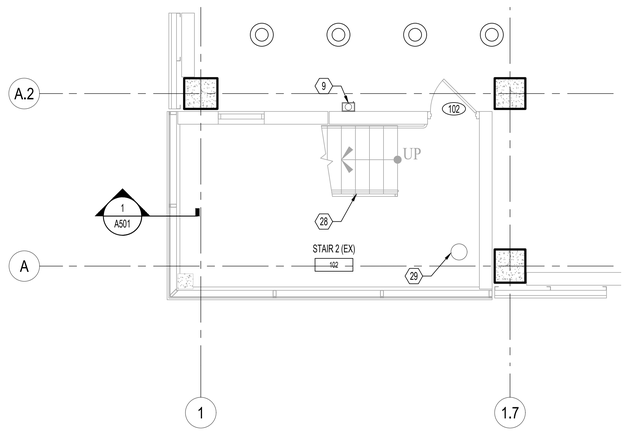

N

4 ENLARGED FLOOR PLAN - LEVEL 1

1/4"=1'-0"

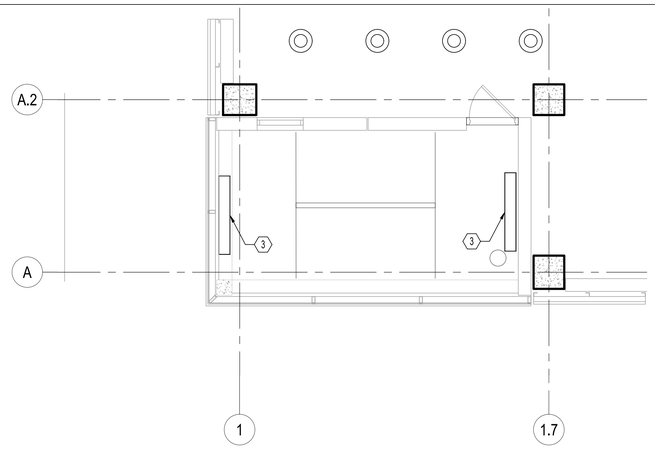

N

3 ENLARGED REFLECTED CEILING PLAN - LEVEL 1

1/4"=1'-0"

ENLARGED FLOOR PLAN GEN. NOTES

A. REFER TO SHEET GI002 FOR BID DEDUCT ALTERNATE DESCRIPTIONS.
B. SEE CIVIL, STRUCTURAL, FIRE PROTECTION, PLUMBING, MECHANICAL AND ELECTRICAL DRAWINGS FOR NEW WORK.
C. SEAL / FIRESTOP ALL OPENINGS IN NEW 1 HR. AND SMOKE RATED PARTITION WALLS AND FLOORS. INCLUDES ALL EXPOSED CONDUIT AND PIPING.
D. INFILL ANY VOIDS IN CONCRETE STRUCTURE, SLAB AND PRECAST SPANDREL PANELS BY DEMOLITION.
E. REFER TO SHEET A506 FOR WALL TYPES.
F. REFER TO A6 SERIES DRAWINGS FOR DOOR AND WINDOW INFORMATION.

(X) ENLARGED FLOOR PLAN KEY NOTES

* NOTE: NOT ALL NOTES MAY APPLY TO THIS SHEET.

1. ALUMINUM LOUVER VENT AND MOTORIZED DAMPER. LOUVER FINISH TO MATCH CURTAIN WALL MULLIONS. REFER TO MECHANICAL DRAWINGS FOR MORE INFORMATION.
2. MECHANICAL UNIT. REFER TO MECHANICAL DRAWINGS.
3. LIGHT FIXTURE. REFER TO ELECTRICAL DRAWINGS.
4. LAMINATED GLASS GUARDRAILS ON STAINLESS STEEL STANDOFFS. PROVIDE STAINLESS STEEL HANDRAIL MOUNTED TO GLASS. REFER SHEET A505 FOR MORE INFORMATION. BID DEDUCT #8: SUBSTITUTE LAMINATE GLASS GUARDRAIL FOR PAINTED METAL GUARDRAIL TO MATCH OTHER PROJECT LOCATIONS.
5. CONCRETE BOLLARD TO MATCH EXISTING.
6. NEW CURTAINWALL GLAZING SYSTEM TO MATCH EXISTING. REFER TO ELEVATIONS AND BID DEDUCT ALTERNATES FOR ADDITIONAL INFORMATION.
7. STAINLESS STEEL EXPANSION JOINT COVER WITH ANTI-SLIP FILLER AND BEVELED EDGES. ANCHOR WITH COUNTERSUNK ANCHORS IN BED OF MASTIC. REFER DETAIL 9/A601.
8. NEW CONCRETE COLUMN. REFER TO STRUCTURAL FOR MORE INFORMATION.
9. FIRE EXTINGUISHER CABINET. REFER TO SHEET A505 FOR MORE INFORMATION.
10. NEW STOREFRONT GLAZING SYSTEM TO MATCH EXISTING. REFER TO ELEVATIONS FOR MORE INFORMATION.
11. ALUMINUM ARCHITECTURAL SCREEN SYSTEM (TO MATCH EXISTING) MOUNTED ON CLIP ANGLES TO PRECAST STRUCTURE. REFER TO WALL SECTIONS FOR MORE INFORMATION.
12. NEW STAINLESS STEEL HANDRAIL AND PAINTED STEEL GUARDRAIL (TO MATCH EXISTING). REFER TO A501 AND A505 FOR MORE INFORMATION.
13. NEW PRECAST CONCRETE STAIRS. REFER TO STRUCTURAL FOR MORE INFORMATION.
14. ALUMINUM ARCHITECTURAL SCREEN SYSTEM (TO MATCH EXISTING) ATTACHMENT TO PRECAST WALL SHALL BE DELEGATED DESIGN BY SCREEN SYSTEM MANUFACTURER. COORDINATE WITH PRECAST AND SCREEN SYSTEM MANUFACTURER.
15. NEW CURTAINWALL GLAZING SYSTEM TO MATCH EXISTING. INSTALL IN ALIGNMENT WITH EXISTING SYSTEM BELOW. REFER TO ELEVATIONS AND BID DEDUCT ALTERNATES FOR ADDITIONAL INFORMATION.
16. NEW P.C. CONCRETE COLUMN / BEAM. REFER TO STRUCTURAL FOR MORE INFORMATION.
17. NEW ALUMINUM ARCHITECTURAL SCREEN SYSTEM TO MATCH EXISTING. INSTALL IN ALIGNMENT WITH EXISTING SYSTEM BELOW. REFER TO ELEVATIONS & WALL SECTIONS FOR ADDITIONAL INFORMATION. PROVIDE STRUCTURAL STEEL FRAMING AT LEVEL 5.
18. ROOF ASSEMBLY R-1. SEE DETAIL 5/A406.
19. SCUPPER / DOWNSPOUT TO ROOF BELOW.
20. PROVIDE CANTILEVERED ALUMINUM SUNSHADE SYSTEM AND ASSOCIATED ANCHOR COMPONENTS TO MATCH EXISTING. COORDINATE WITH PLANS, ELEVATIONS AND DETAILS.
21. PROVIDE CANTILEVERED ALUMINUM SUNSHADE SYSTEM AND ASSOCIATED ANCHOR COMPONENTS TO MATCH EXISTING. COORDINATE WITH PLANS, ELEVATIONS AND DETAILS.
22. PERFORATED METAL SCREEN WALL WITH CUSTOM PERFORATION PATTERN.
23. PAINTED STEEL 'RESTRICTED' ACCESS GATE. REFER TO DETAILS ON SHEET A506 FOR MORE INFORMATION.
24. MODULAR AWNING SYSTEM (BASIS OF DESIGN: CONSTRUCTION SPECIALTIES).
25. WALL MOUNTED STAINLESS STEEL HANDRAIL.
26. STAINLESS STEEL HANDRAIL MOUNTED TO PERFORATED METAL SCREEN WALL.
27. FUTURE ACCESS TUNNEL CONNECTION TO MEDICAL CENTER BUILDING. COORDINATE INSTALLATION OF ALL UTILITIES AND UNDERGROUND ELEMENTS TO THE NORTH OF THE GARAGE WITH AOR TO LIMIT CONFLICTS WITH FUTURE WORK.
28. PAINT EXISTING METAL GUARDRAIL TO REMAIN.
29. LOCATION OF FIRE STANDPIPE. HOLD TIGHT TO WALLS. REFER TO PLUMBING DRAWINGS.
30. SCUPPER/DOWNSPOUT TO PARKING DECK, ROUTE DOWNSPOUT DOWN TO PARKING DECK WALL AND NORTH TO COLUMN BEFORE SPILLING DOWNSPOUT ONTO PARKING DECK.
31. WATER DRAIN PIPE FOR PLANTER. REFER TO CIVIL DRAWINGS.
32. WAVE-TO-OPEN DOOR OPERATOR SWITCH MOUNTED TO CURTAIN WALL MULLION. BASIS OF DESIGN: NORTON 704 TOUCHLESS WALL SWITCH.
33. WAVE-TO-OPEN DOOR OPERATOR SWITCH MOUNTED ON SWITCH POST. BASIS OF DESIGN: NORTON 500.
34. DOOR OPERATOR SWITCH POST ONLY WITH NO SWITCH. BASIS OF DESIGN: NORTON 530POST.
35. INFILL EXISTING OPENING LEFT FROM REMOVED MECHANICAL EQUIPMENT. INSTALL CMU FLUSH TO EXTERIOR FACE OF WALL. PAINT WALL AFTER INSTALLATION OF INFILL.
36. SCUPPER/DOWNSPOUT TO LEVEL 5 PARKING DECK BELOW.

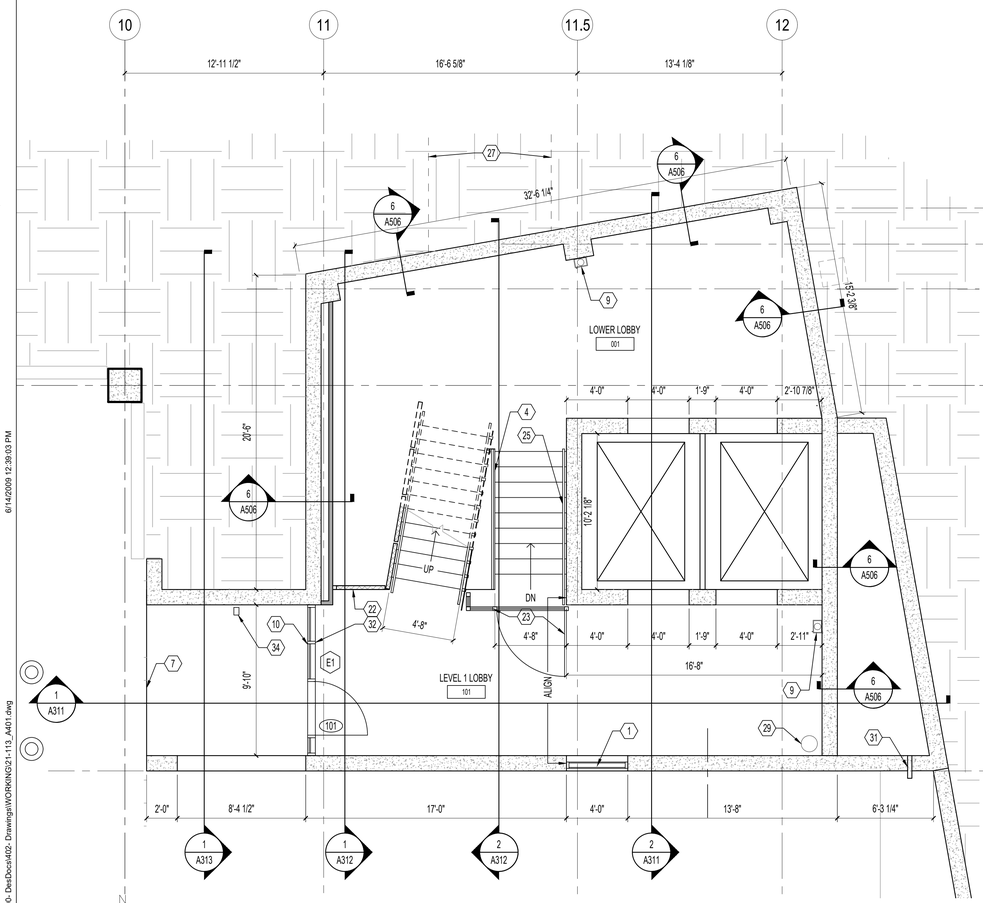

N

2 ENLARGED FLOOR PLAN - LEVEL 1 AND LOWER LOBBY

1/4"=1'-0"

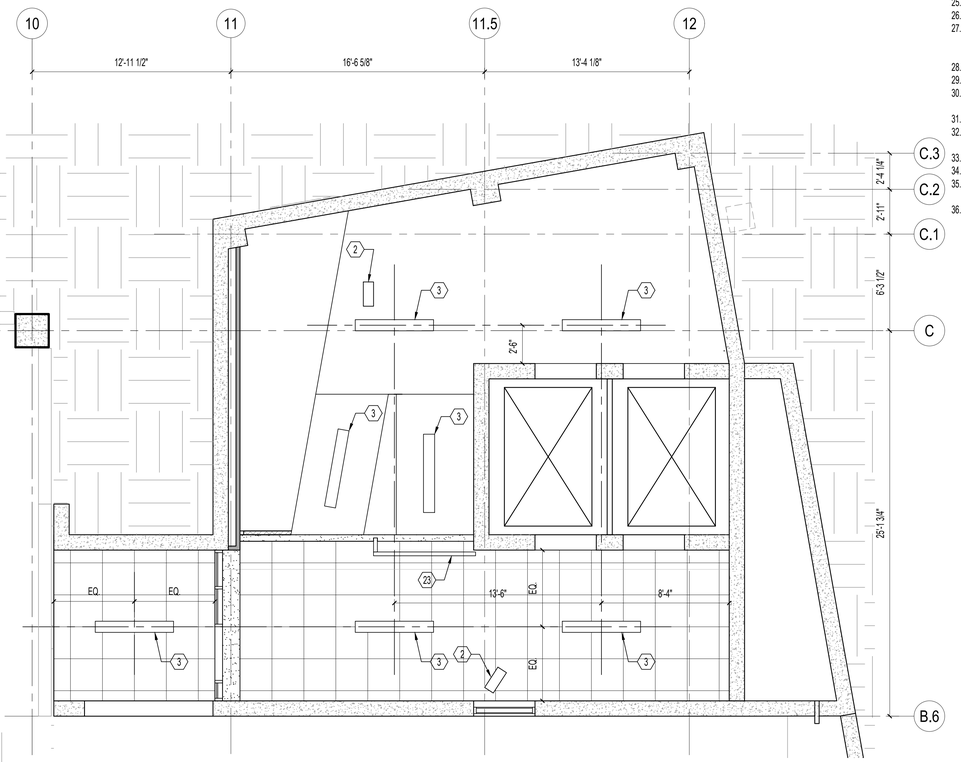

N

1 ENLARGED REFLECTED CEILING PLAN - LEVEL 1 AND LOWER LOBBY

1/4"=1'-0"

NEW STAIR / ELEVATOR TOWER

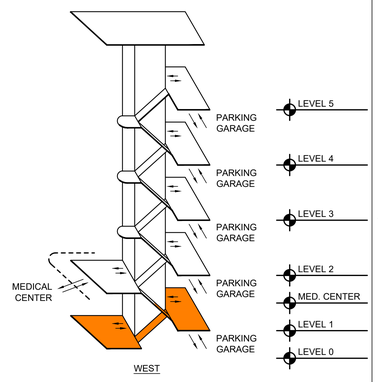

ISOMETRIC DIAGRAM

NTS

ISSUE FOR BID	08-09-2024
Revisions:	Date:

CONSULTANT

ARCHITECT/ENGINEER OF RECORD

BANCROFT ARCHITECTS + ENGINEERS
3300 Dundee Rd.
Northbrook, IL 60062
T: 847.952.9362
www.bancroft-ae.com

STAMP

LICENSED ARCHITECT 5912 CRISTINA D. ZAMORA BANCROFT ARCHITECTS + ENGINEERS STATE OF ILLINOIS

Office of Construction and Facilities Management

VA U.S. Department of Veterans Affairs

Drawing Title: ARCHITECTURAL- ENLARGED FLOOR AND REFLECTED CEILING PLANS - LEVEL 1 AND LOWER LOBBY	Phase: ISSUE FOR BID	Project Title: PARKING RAMP EXPANSION	Project Number: 528-18-375
			Building Number: 29
Approved: Project Director		Location: 3495 BAILEY AVE., BUFFALO, NY 14215	Drawing Number: A401
		Issue Date: 08-09-2024 / Checked: CZ / Drawn: II	

K:\CCG_PROJECTS\2020\21\21-113 - Parking Ramp (Buffalo, NY)\400- DesDocs\402- Drawings\WORKING\21-113_A401.dwg
6/14/2009 12:39:03 PM

VA FORM 08 - 6231

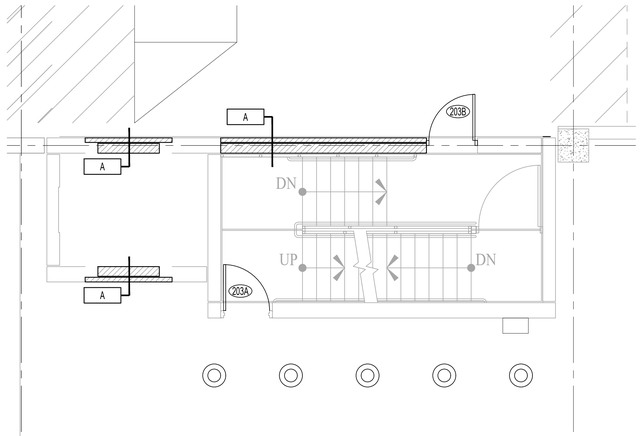

5 ENLARGED FLOOR PLAN - LEVEL 2

1/4"=1'-0"

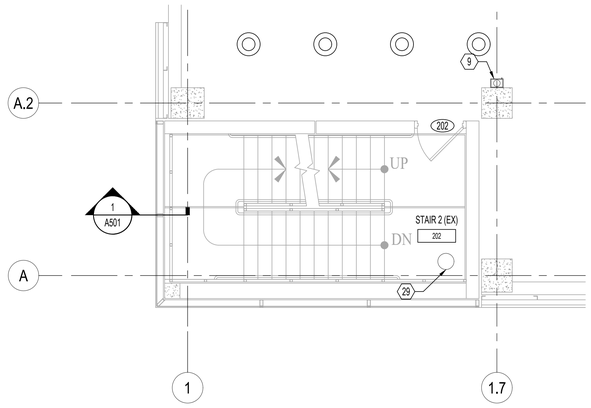

4 ENLARGED FLOOR PLAN - LEVEL 2

1/4"=1'-0"

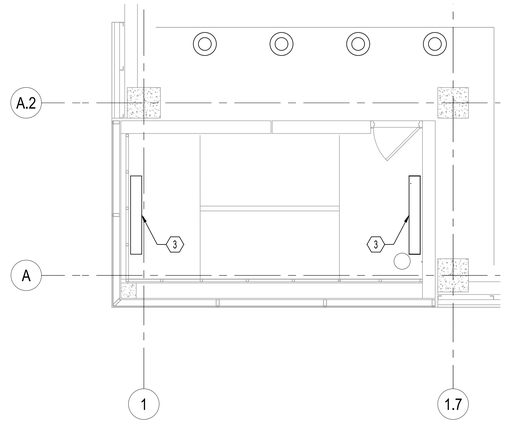

3 ENLARGED REFLECTED CEILING PLAN - LEVEL 2

1/4"=1'-0"

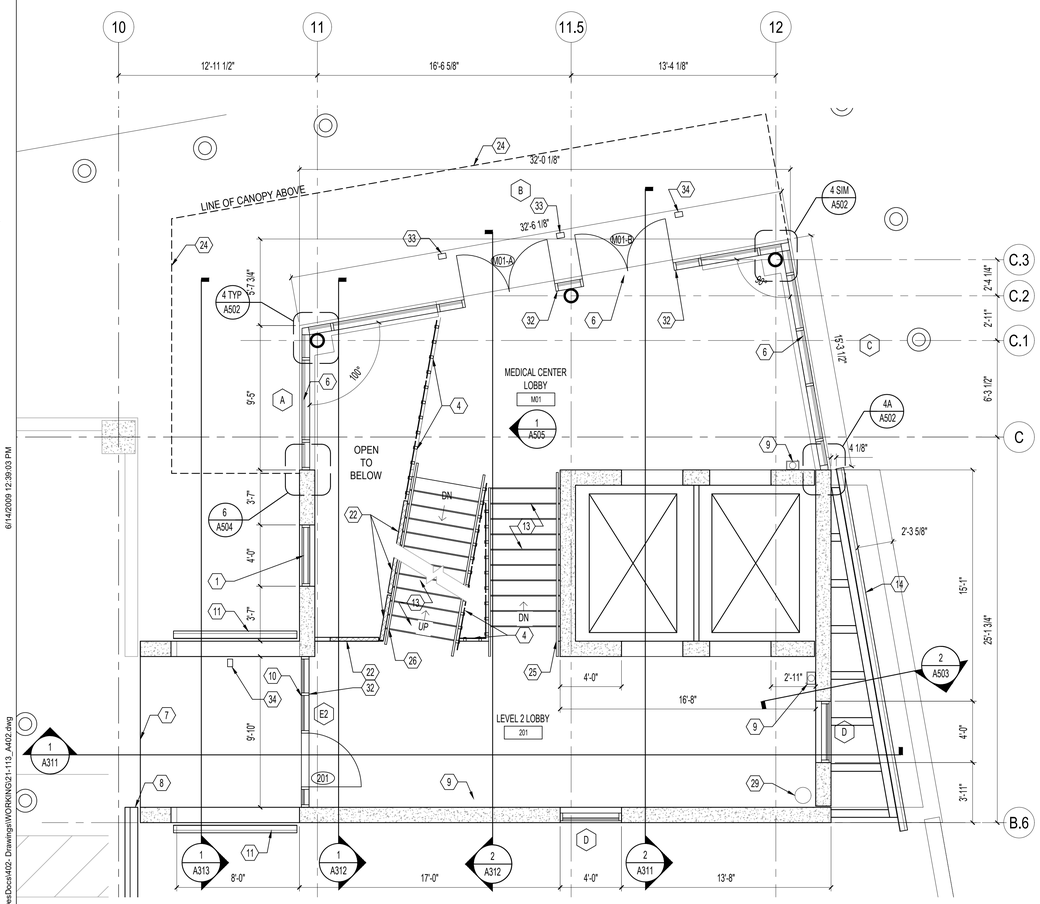

2 ENLARGED FLOOR PLAN - LEVEL 2 AND MEDICAL CENTER LOBBY

1/4"=1'-0"

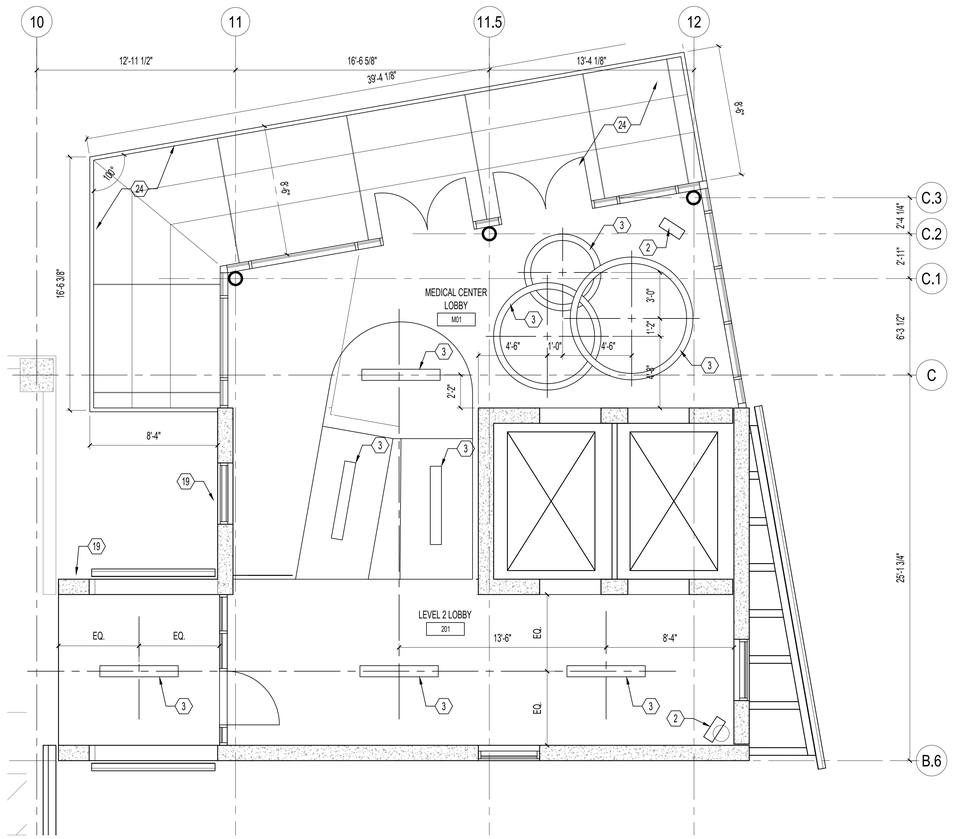

1 ENLARGED REFLECTED CEILING PLAN - LEVEL 2 AND MEDICAL CENTER LOBBY

1/4"=1'-0"

ENLARGED FLOOR PLAN GEN. NOTES

A. REFER TO SHEET GI002 FOR BID DEDUCT ALTERNATE DESCRIPTIONS.
B. SEE CIVIL, STRUCTURAL, FIRE PROTECTION, PLUMBING, MECHANICAL AND ELECTRICAL DRAWINGS FOR NEW WORK.
C. SEAL / FIRESTOP ALL OPENINGS IN NEW 1 HR. AND SMOKE RATED PARTITION WALLS AND FLOORS. INCLUDES ALL EXPOSED CONDUIT AND PIPING.
D. INFILL ANY VOIDS IN CONCRETE STRUCTURE, SLAB AND PRECAST SPANDREL PANELS BY DEMOLITION.
E. REFER TO SHEET A506 FOR WALL TYPES.
F. REFER TO A6 SERIES DRAWINGS FOR DOOR AND WINDOW INFORMATION.

⟨X⟩ ENLARGED FLOOR PLAN KEY NOTES

* NOTE: NOT ALL NOTES MAY APPLY TO THIS SHEET.
1. ALUMINUM LOUVER VENT AND MOTORIZED DAMPER. LOUVER FINISH TO MATCH CURTAIN WALL MULLIONS. REFER TO MECHANICAL DRAWINGS FOR MORE INFORMATION.
2. MECHANICAL UNIT. REFER TO MECHANICAL DRAWINGS.
3. LIGHT FIXTURE. REFER TO ELECTRICAL DRAWINGS.
4. LAMINATED GLASS GUARDRAILS ON STAINLESS STEEL STANDOFFS. PROVIDE STAINLESS STEEL HANDRAIL MOUNTED TO GLASS. REFER SHEET A505 FOR MORE INFORMATION. BID DEDUCT #8: SUBSTITUTE LAMINATE GLASS GUARDRAIL FOR PAINTED METAL GUARDRAIL TO MATCH OTHER PROJECT LOCATIONS.
5. CONCRETE BOLLARD TO MATCH EXISTING.
6. NEW CURTAINWALL GLAZING SYSTEM TO MATCH EXISTING. REFER TO ELEVATIONS AND BID DEDUCT ALTERNATES FOR ADDITIONAL INFORMATION.
7. STAINLESS STEEL EXPANSION JOINT COVER WITH ANTI-SLIP FILLER AND BEVELED EDGES. ANCHOR WITH COUNTERSUNK ANCHORS IN BED OF MASTIC. REFER DETAIL 5/A601.
8. NEW CONCRETE COLUMN. REFER TO STRUCTURAL FOR MORE INFORMATION.
9. FIRE EXTINGUISHER CABINET. REFER TO SHEET A505 FOR MORE INFORMATION.
10. NEW STOREFRONT GLAZING SYSTEM TO MATCH EXISTING. REFER TO ELEVATIONS FOR MORE INFORMATION.
11. ALUMINUM ARCHITECTURAL SCREEN SYSTEM (TO MATCH EXISTING) MOUNTED ON CLIP ANGLES TO PRECAST STRUCTURE. REFER TO WALL SECTIONS FOR MORE INFORMATION.
12. NEW STAINLESS STEEL HANDRAIL AND PAINTED STEEL GUARDRAIL (TO MATCH EXISTING). REFER TO A501 AND A505 FOR MORE INFORMATION.
13. NEW PRECAST CONCRETE STAIRS. REFER TO STRUCTURAL FOR MORE INFORMATION.
14. ALUMINUM ARCHITECTURAL SCREEN SYSTEM (TO MATCH EXISTING) ATTACHMENT TO PRECAST WALL SHALL BE DELEGATED DESIGN BY SCREEN SYSTEM MANUFACTURER. COORDINATE WITH PRECAST AND SCREEN SYSTEM MANUFACTURER.
15. NEW CURTAINWALL GLAZING SYSTEM TO MATCH EXISTING. INSTALL IN ALIGNMENT WITH EXISTING SYSTEM BELOW. REFER TO ELEVATIONS AND BID DEDUCT ALTERNATES FOR ADDITIONAL INFORMATION.
16. NEW P.C. CONCRETE COLUMN / BEAM. REFER TO STRUCTURAL FOR MORE INFORMATION.
17. NEW ALUMINUM ARCHITECTURAL SCREEN SYSTEM TO MATCH EXISTING. INSTALL IN ALIGNMENT WITH EXISTING SYSTEM BELOW. REFER TO ELEVATIONS & WALL SECTIONS FOR ADDITIONAL INFORMATION. PROVIDE STRUCTURAL STEEL FRAMING AT LEVEL 5.
18. ROOF ASSEMBLY R-1. SEE DETAIL 5/A406.
19. SCUPPER / DOWNSPOUT TO ROOF BELOW.
20. PROVIDE CANTILEVERED ALUMINUM SUNSHADE SYSTEM AND ASSOCIATED ANCHOR COMPONENTS TO MATCH EXISTING. COORDINATE WITH PLANS, ELEVATIONS AND DETAILS.
21. PROVIDE CANTILEVERED ALUMINUM SUNSHADE SYSTEM AND ASSOCIATED ANCHOR COMPONENTS TO MATCH EXISTING. COORDINATE WITH PLANS, ELEVATIONS AND DETAILS.
22. PERFORATED METAL SCREEN WALL WITH CUSTOM PERFORATION PATTERN.
23. PAINTED STEEL 'RESTRICTED' ACCESS GATE. REFER TO DETAILS ON SHEET A506 FOR MORE INFORMATION.
24. MODULAR AWNING SYSTEM (BASIS OF DESIGN: CONSTRUCTION SPECIALTIES).
25. WALL MOUNTED STAINLESS STEEL HANDRAIL.
26. STAINLESS STEEL HANDRAIL MOUNTED TO PERFORATED METAL SCREEN WALL.
27. FUTURE ACCESS TUNNEL CONNECTION TO MEDICAL CENTER BUILDING. COORDINATE INSTALLATION OF ALL UTILITIES AND UNDERGROUND ELEMENTS TO THE NORTH OF THE GARAGE WITH AOR TO LIMIT CONFLICTS WITH FUTURE WORK.
28. PAINT EXISTING METAL GUARDRAIL TO REMAIN.
29. LOCATION OF FIRE STANDPIPE. HOLD TIGHT TO WALLS. REFER TO PLUMBING DRAWINGS.
30. SCUPPER/DOWNSPOUT TO PARKING DECK. ROUTE DOWNSPOUT DOWN TO PARKING DECK WALL AND NORTH TO COLUMN BEFORE SPILLING DOWNSPOUT ONTO PARKING DECK.
31. WATER DRAIN PIPE FOR PLANTER. REFER TO CIVIL DRAWINGS.
32. WAVE-TO-OPEN DOOR OPERATOR SWITCH MOUNTED TO CURTAIN WALL MULLION. BASIS OF DESIGN: NORTON 704 TOUCHLESS WALL SWITCH.
33. WAVE-TO-OPEN DOOR OPERATOR SWITCH MOUNTED ON SWITCH POST. BASIS OF DESIGN: NORTON 500.
34. DOOR OPERATOR SWITCH POST ONLY WITH NO SWITCH. BASIS OF DESIGN: NORTON 530POST.
35. INFILL EXISTING OPENING LEFT FROM REMOVED MECHANICAL EQUIPMENT. INSTALL CMU FLUSH TO EXTERIOR FACE OF WALL. PAINT WALL AFTER INSTALLATION OF INFILL.
36. SCUPPER/DOWNSPOUT TO LEVEL 5 PARKING DECK BELOW.

NEW STAIR / ELEVATOR TOWER

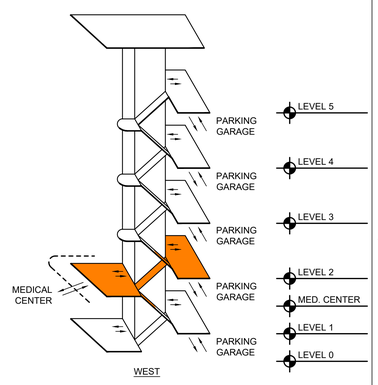

ISOMETRIC DIAGRAM

NTS

ISSUE FOR BID	08-09-2024
Revisions:	Date:

CONSULTANT

ARCHITECT/ENGINEER OF RECORD

BANCROFT ARCHITECTS + ENGINEERS
3300 Dundee Rd.
Northbrook, IL 60062
T: 847.952.9362
www.bancroft-ae.com

STAMP

LICENSED ARCHITECT 57121 CRISTIAN D. ZAMFIRUS MY COMMISSION EXPIRES 11/30/2025 STATE OF ILLINOIS

Office of Construction and Facilities Management

VA U.S. Department of Veterans Affairs

Drawing Title: ARCHITECTURAL- ENLARGED FLOOR AND REF. CEILING PLANS - LEVEL 2 AND MEDICAL CENTER LOBBY	Phase: ISSUE FOR BID	Project Title: PARKING RAMP EXPANSION	Project Number: 528-18-375
			Building Number: 29
Approved: Project Director		Location: 3495 BAILEY AVE., BUFFALO, NY 14215	Drawing Number: A402
		Issue Date: 08-09-2024 / Checked: CZ / Drawn: II	

6/14/2009 12:39:03 PM

K:\CCG_PROJECTS\2021\21-113 - Parking Ramp (Buffalo, NY)\400- Des\Docs\402- Drawings\WORKING\21-113_A402.dwg

VA FORM 08 - 6231

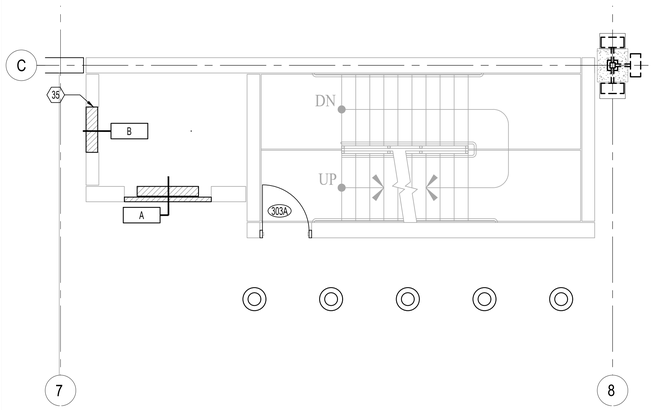

5 ENLARGED FLOOR PLAN - LEVEL 3
1/4"=1'-0"

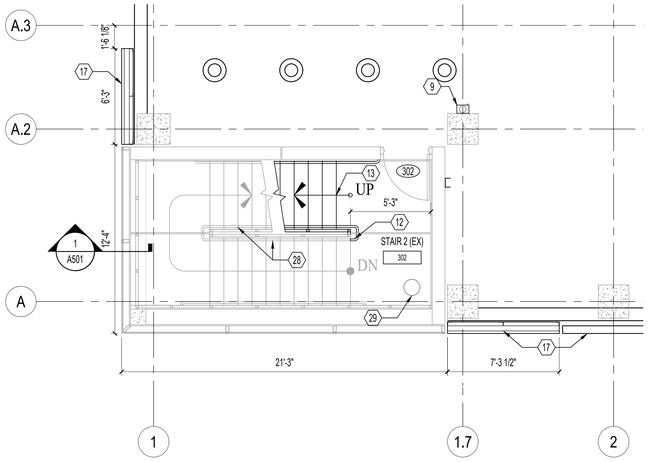

4 ENLARGED FLOOR PLAN - LEVEL 3
1/4"=1'-0"

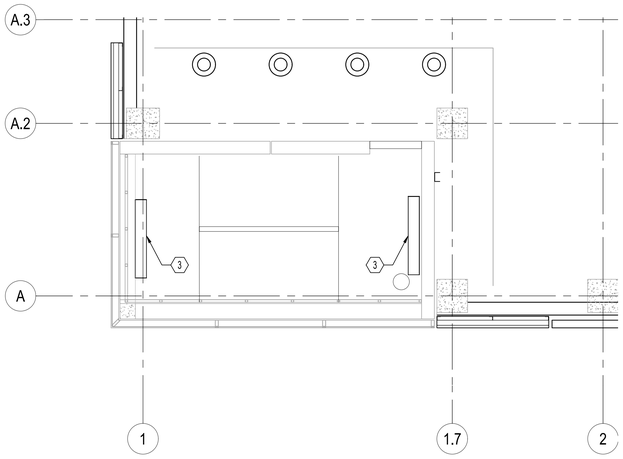

3 ENLARGED REFLECTED CEILING PLAN - LEVEL 3
1/4"=1'-0"

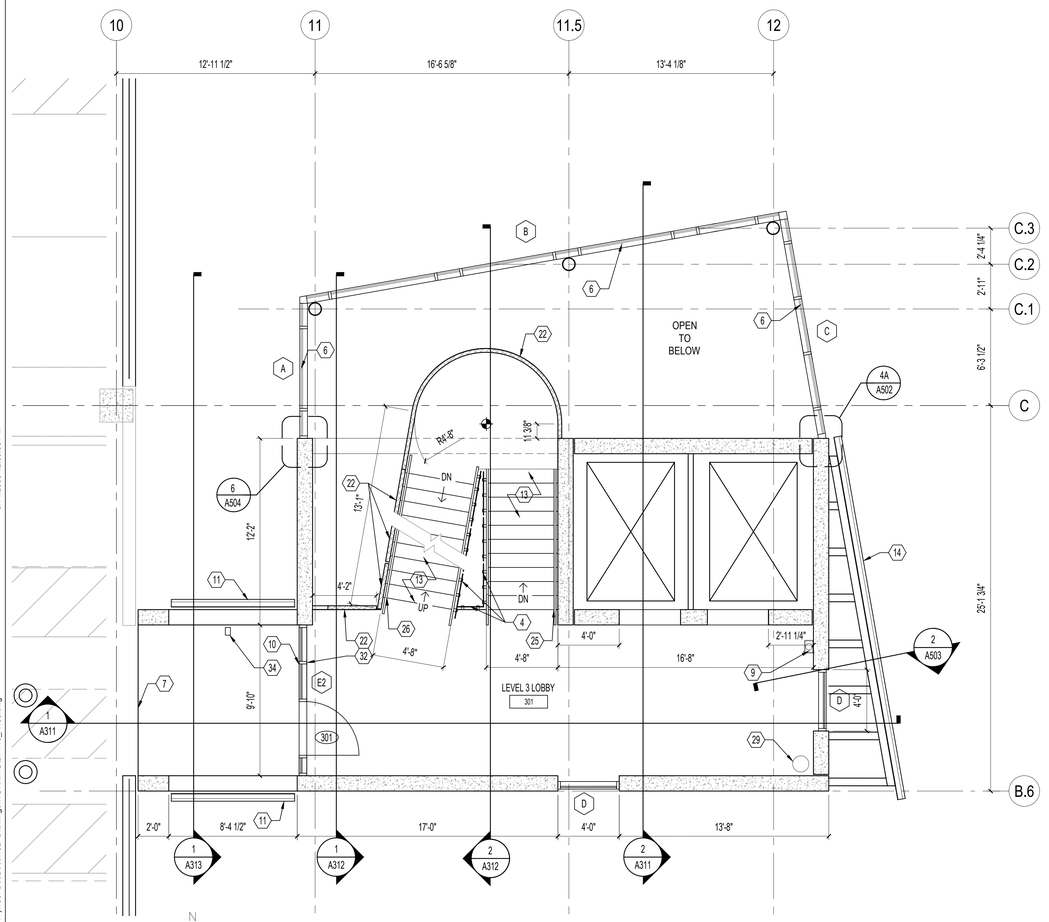

2 ENLARGED FLOOR PLAN - LEVEL 3
1/4"=1'-0"

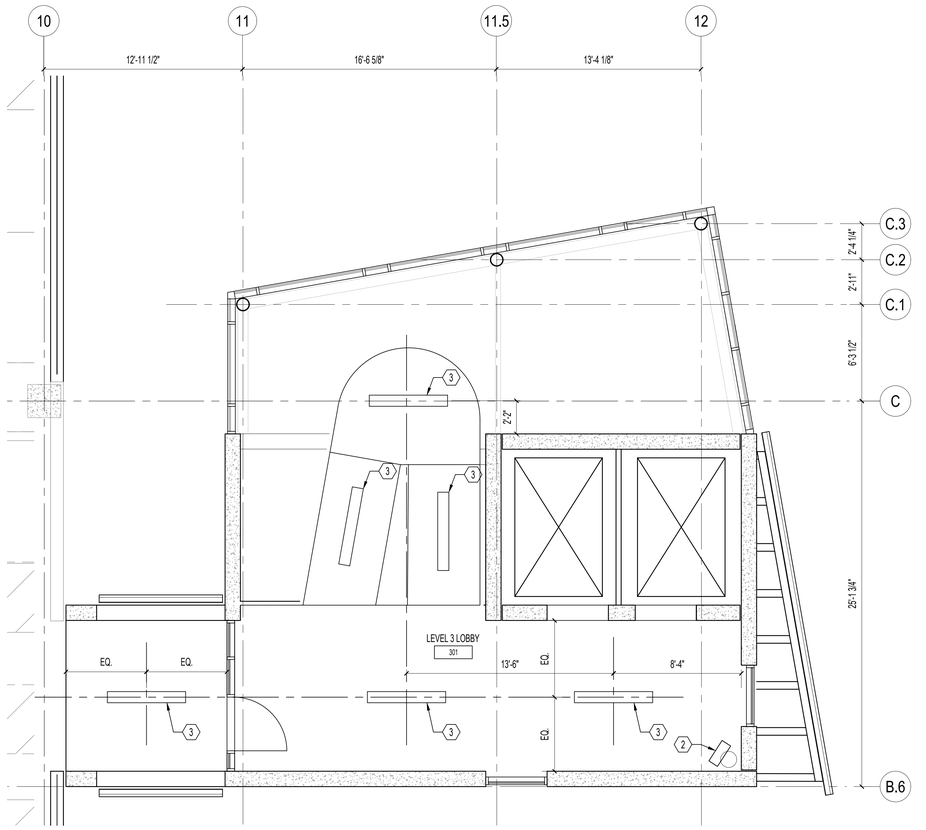

1 ENLARGED REFLECTED CEILING PLAN - LEVEL 3
1/4"=1'-0"

ENLARGED FLOOR PLAN GEN. NOTES

A. REFER TO SHEET G002 FOR BID DEDUCT ALTERNATE DESCRIPTIONS.
B. SEE CIVIL, STRUCTURAL, FIRE PROTECTION, PLUMBING, MECHANICAL AND ELECTRICAL DRAWINGS FOR NEW WORK.
C. SEAL / FIRESTOP ALL OPENINGS IN NEW 1 HR. AND SMOKE RATED PARTITION WALLS AND FLOORS. INCLUDES ALL EXPOSED CONDUIT AND PIPING.
D. INFILL ANY VOIDS IN CONCRETE STRUCTURE, SLAB AND PRECAST SPANDREL PANELS BY DEMOLITION.
E. REFER TO SHEET A506 FOR WALL TYPES.
F. REFER TO A6 SERIES DRAWINGS FOR DOOR AND WINDOW INFORMATION.

(X) ENLARGED FLOOR PLAN KEY NOTES

* NOTE: NOT ALL NOTES MAY APPLY TO THIS SHEET.
1. ALUMINUM LOUVER VENT AND MOTORIZED DAMPER. LOUVER FINISH TO MATCH CURTAIN WALL MULLIONS. REFER TO MECHANICAL DRAWINGS FOR MORE INFORMATION.
2. MECHANICAL UNIT. REFER TO MECHANICAL DRAWINGS.
3. LIGHT FIXTURE. REFER TO ELECTRICAL DRAWINGS.
4. LAMINATED GLASS GUARDRAILS ON STAINLESS STEEL STANDOFFS. PROVIDE STAINLESS STEEL HANDRAIL MOUNTED TO GLASS. REFER SHEET A505 FOR MORE INFORMATION. BID DEDUCT #8: SUBSTITUTE LAMINATE GLASS GUARDRAIL FOR PAINTED METAL GUARDRAIL TO MATCH OTHER PROJECT LOCATIONS.
5. CONCRETE BOLLARD TO MATCH EXISTING.
6. NEW CURTAINWALL GLAZING SYSTEM TO MATCH EXISTING. REFER TO ELEVATIONS AND BID DEDUCT ALTERNATES FOR ADDITIONAL INFORMATION.
7. STAINLESS STEEL EXPANSION JOINT COVER WITH ANTI-SLIP FILLER AND BEVELED EDGES. ANCHOR WITH COUNTERSUNK ANCHORS IN BED OF MASTIC. REFER DETAIL 5/A601.
8. NEW CONCRETE COLUMN. REFER TO STRUCTURAL FOR MORE INFORMATION.
9. FIRE EXTINGUISHER CABINET. REFER TO SHEET A505 FOR MORE INFORMATION.
10. NEW STOREFRONT GLAZING SYSTEM TO MATCH EXISTING. REFER TO ELEVATIONS FOR MORE INFORMATION.
11. ALUMINUM ARCHITECTURAL SCREEN SYSTEM (TO MATCH EXISTING) MOUNTED ON CLIP ANGLES TO PRECAST STRUCTURE. REFER TO WALL SECTIONS FOR MORE INFORMATION.
12. NEW STAINLESS STEEL HANDRAIL AND PAINTED STEEL GUARDRAIL (TO MATCH EXISTING). REFER TO A501 AND A505 FOR MORE INFORMATION.
13. NEW PRECAST CONCRETE STAIRS. REFER TO STRUCTURAL FOR MORE INFORMATION.
14. ALUMINUM ARCHITECTURAL SCREEN SYSTEM (TO MATCH EXISTING) ATTACHMENT TO PRECAST WALL SHALL BE DELEGATED DESIGN BY SCREEN SYSTEM MANUFACTURER. COORDINATE WITH PRECAST AND SCREEN SYSTEM MANUFACTURER.
15. NEW CURTAINWALL GLAZING SYSTEM TO MATCH EXISTING. INSTALL IN ALIGNMENT WITH EXISTING SYSTEM BELOW. REFER TO ELEVATIONS AND BID DEDUCT ALTERNATES FOR ADDITIONAL INFORMATION.
16. NEW P.C. CONCRETE COLUMN / BEAM. REFER TO STRUCTURAL FOR MORE INFORMATION.
17. NEW ALUMINUM ARCHITECTURAL SCREEN SYSTEM TO MATCH EXISTING. INSTALL IN ALIGNMENT WITH EXISTING SYSTEM BELOW. REFER TO ELEVATIONS & WALL SECTIONS FOR ADDITIONAL INFORMATION. PROVIDE STRUCTURAL STEEL FRAMING AT LEVEL 5.
18. ROOF ASSEMBLY R-1. SEE DETAIL 5/A406.
19. SCUPPER / DOWNSPOUT TO ROOF BELOW.
20. PROVIDE CANTILEVERED ALUMINUM SUNSHADE SYSTEM AND ASSOCIATED ANCHOR COMPONENTS TO MATCH EXISTING. COORDINATE WITH PLANS, ELEVATIONS AND DETAILS.
21. PROVIDE CANTILEVERED ALUMINUM SUNSHADE SYSTEM AND ASSOCIATED ANCHOR COMPONENTS TO MATCH EXISTING. COORDINATE WITH PLANS, ELEVATIONS AND DETAILS.
22. PERFORATED METAL SCREEN WALL WITH CUSTOM PERFORATION PATTERN.
23. PAINTED STEEL 'RESTRICTED' ACCESS GATE. REFER TO DETAILS ON SHEET A506 FOR MORE INFORMATION.
24. MODULAR AWNING SYSTEM (BASIS OF DESIGN: CONSTRUCTION SPECIALTIES).
25. WALL MOUNTED STAINLESS STEEL HANDRAIL.
26. STAINLESS STEEL HANDRAIL MOUNTED TO PERFORATED METAL SCREEN WALL.
27. FUTURE ACCESS TUNNEL CONNECTION TO MEDICAL CENTER BUILDING. COORDINATE INSTALLATION OF ALL UTILITIES AND UNDERGROUND ELEMENTS TO THE NORTH OF THE GARAGE WITH AOR TO LIMIT CONFLICTS WITH FUTURE WORK.
28. PAINT EXISTING METAL GUARDRAIL TO REMAIN.
29. LOCATION OF FIRE STANDPIPE. HOLD TIGHT TO WALLS. REFER TO PLUMBING DRAWINGS.
30. SCUPPER/DOWNSPOUT TO PARKING DECK. ROUTE DOWNSPOUT DOWN TO PARKING DECK WALL AND NORTH TO COLUMN BEFORE SPILLING DOWNSPOUT ONTO PARKING DECK.
31. WATER DRAIN PIPE FOR PLANTER. REFER TO CIVIL DRAWINGS.
32. WAVE-TO-OPEN DOOR OPERATOR SWITCH MOUNTED TO CURTAIN WALL MULLION. BASIS OF DESIGN: NORTON 704 TOUCHLESS WALL SWITCH.
33. WAVE-TO-OPEN DOOR OPERATOR SWITCH MOUNTED ON SWITCH POST. BASIS OF DESIGN: NORTON 500.
34. DOOR OPERATOR SWITCH POST ONLY WITH NO SWITCH. BASIS OF DESIGN: NORTON 530POST.
35. INFILL EXISTING OPENING LEFT FROM REMOVED MECHANICAL EQUIPMENT. INSTALL CMU FLUSH TO EXTERIOR FACE OF WALL. PAINT WALL AFTER INSTALLATION OF INFILL.
36. SCUPPER/DOWNSPOUT TO LEVEL 5 PARKING DECK BELOW.

NEW STAIR / ELEVATOR TOWER

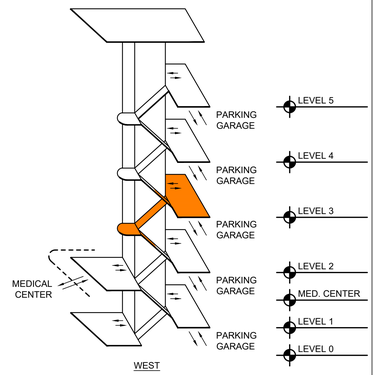

ISOMETRIC DIAGRAM
NTS

ISSUE FOR BID	08-09-2024
Revisions:	Date:

CONSULTANT

ARCHITECT/ENGINEER OF RECORD
BANCROFT ARCHITECTS + ENGINEERS
3300 Dundee Rd.
Northbrook, IL 60062
T: 847.952.9362
www.bancroft-ae.com

STAMP
LICENSED ARCHITECT 5712 CRISTIAN D. ZAMFIRUS MY LICENSE EXPIRES NOVEMBER 30, 2024 STATE OF ILLINOIS

Office of Construction and Facilities Management
VA U.S. Department of Veterans Affairs

Drawing Title: ARCHITECTURAL- ENLARGED FLOOR AND REFLECTED CEILING PLANS - LEVEL 3	Phase: ISSUE FOR BID	Project Title: PARKING RAMP EXPANSION	Project Number: 528-18-375
			Building Number: 29
Approved: Project Director		Location: 3495 BAILEY AVE., BUFFALO, NY 14215	Drawing Number: A403
		Issue Date: 08-09-2024 / Checked: CZ / Drawn: II	

K:\CCG_PROJECTS\2021\21-113 - Parking Ramp (Buffalo, NY)\400- Dwg\Dwgs\WORKING\21-113_A403.dwg
6/14/2009 12:39:03 PM
VA FORM 08 - 6231

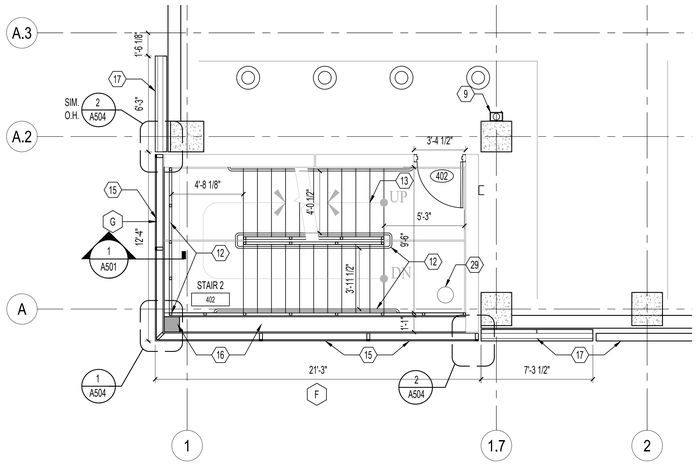

N

4 ENLARGED FLOOR PLAN - LEVEL 4

1/4"=1'-0"

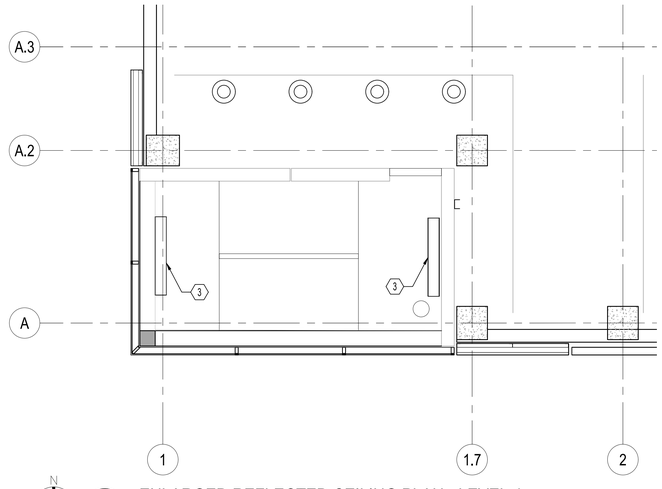

N

3 ENLARGED REFLECTED CEILING PLAN - LEVEL 4

1/4"=1'-0"

ENLARGED FLOOR PLAN GEN. NOTES

A. REFER TO SHEET GI002 FOR BID DEDUCT ALTERNATE DESCRIPTIONS.
B. SEE CIVIL, STRUCTURAL, FIRE PROTECTION, PLUMBING, MECHANICAL AND ELECTRICAL DRAWINGS FOR NEW WORK.
C. SEAL / FIRESTOP ALL OPENINGS IN NEW 1 HR. AND SMOKE RATED PARTITION WALLS AND FLOORS. INCLUDES ALL EXPOSED CONDUIT AND PIPING.
D. INFILL ANY VOIDS IN CONCRETE STRUCTURE, SLAB AND PRECAST SPANDREL PANELS BY DEMOLITION.
E. REFER TO SHEET A506 FOR WALL TYPES.
F. REFER TO A6 SERIES DRAWINGS FOR DOOR AND WINDOW INFORMATION.

(X) ENLARGED FLOOR PLAN KEY NOTES

* NOTE: NOT ALL NOTES MAY APPLY TO THIS SHEET.
1. ALUMINUM LOUVER VENT AND MOTORIZED DAMPER. LOUVER FINISH TO MATCH CURTAIN WALL MULLIONS. REFER TO MECHANICAL DRAWINGS FOR MORE INFORMATION.
2. MECHANICAL UNIT. REFER TO MECHANICAL DRAWINGS.
3. LIGHT FIXTURE. REFER TO ELECTRICAL DRAWINGS.
4. LAMINATED GLASS GUARDRAILS ON STAINLESS STEEL STANDOFFS. PROVIDE STAINLESS STEEL HANDRAIL MOUNTED TO GLASS. REFER SHEET A505 FOR MORE INFORMATION. BID DEDUCT #8: SUBSTITUTE LAMINATE GLASS GUARDRAIL FOR PAINTED METAL GUARDRAIL TO MATCH OTHER PROJECT LOCATIONS.
5. CONCRETE BOLLARD TO MATCH EXISTING.
6. NEW CURTAINWALL GLAZING SYSTEM TO MATCH EXISTING. REFER TO ELEVATIONS AND BID DEDUCT ALTERNATES FOR ADDITIONAL INFORMATION.
7. STAINLESS STEEL EXPANSION JOINT COVER WITH ANTI-SLIP FILLER AND BEVELED EDGES. ANCHOR WITH COUNTERSUNK ANCHORS IN BED OF MASTIC. REFER DETAIL 9/A601.
8. NEW CONCRETE COLUMN. REFER TO STRUCTURAL FOR MORE INFORMATION.
9. FIRE EXTINGUISHER CABINET. REFER TO SHEET A505 FOR MORE INFORMATION.
10. NEW STOREFRONT GLAZING SYSTEM TO MATCH EXISTING. REFER TO ELEVATIONS FOR MORE INFORMATION.
11. ALUMINUM ARCHITECTURAL SCREEN SYSTEM (TO MATCH EXISTING) MOUNTED ON CLIP ANGLES TO PRECAST STRUCTURE. REFER TO WALL SECTIONS FOR MORE INFORMATION.
12. NEW STAINLESS STEEL HANDRAIL AND PAINTED STEEL GUARDRAIL (TO MATCH EXISTING). REFER TO A501 AND A505 FOR MORE INFORMATION.
13. NEW PRECAST CONCRETE STAIRS. REFER TO STRUCTURAL FOR MORE INFORMATION.
14. ALUMINUM ARCHITECTURAL SCREEN SYSTEM (TO MATCH EXISTING) ATTACHMENT TO PRECAST WALL SHALL BE DELEGATED DESIGN BY SCREEN SYSTEM MANUFACTURER. COORDINATE WITH PRECAST AND SCREEN SYSTEM MANUFACTURER.
15. NEW CURTAINWALL GLAZING SYSTEM TO MATCH EXISTING. INSTALL IN ALIGNMENT WITH EXISTING SYSTEM BELOW. REFER TO ELEVATIONS AND BID DEDUCT ALTERNATES FOR ADDITIONAL INFORMATION.
16. NEW P.C. CONCRETE COLUMN / BEAM. REFER TO STRUCTURAL FOR MORE INFORMATION.
17. NEW ALUMINUM ARCHITECTURAL SCREEN SYSTEM TO MATCH EXISTING. INSTALL IN ALIGNMENT WITH EXISTING SYSTEM BELOW. REFER TO ELEVATIONS & WALL SECTIONS FOR ADDITIONAL INFORMATION. PROVIDE STRUCTURAL STEEL FRAMING AT LEVEL 5.
18. ROOF ASSEMBLY R-1. SEE DETAIL 5/A406.
19. SCUPPER / DOWNSPOUT TO ROOF BELOW.
20. PROVIDE CANTILEVERED ALUMINUM SUNSHADE SYSTEM AND ASSOCIATED ANCHOR COMPONENTS TO MATCH EXISTING. COORDINATE WITH PLANS, ELEVATIONS AND DETAILS.
21. PROVIDE CANTILEVERED ALUMINUM SUNSHADE SYSTEM AND ASSOCIATED ANCHOR COMPONENTS TO MATCH EXISTING. COORDINATE WITH PLANS, ELEVATIONS AND DETAILS.
22. PERFORATED METAL SCREEN WALL WITH CUSTOM PERFORATION PATTERN.
23. PAINTED STEEL 'RESTRICTED' ACCESS GATE. REFER TO DETAILS ON SHEET A506 FOR MORE INFORMATION.
24. MODULAR AWNING SYSTEM (BASIS OF DESIGN: CONSTRUCTION SPECIALTIES).
25. WALL MOUNTED STAINLESS STEEL HANDRAIL.
26. STAINLESS STEEL HANDRAIL MOUNTED TO PERFORATED METAL SCREEN WALL.
27. FUTURE ACCESS TUNNEL CONNECTION TO MEDICAL CENTER BUILDING. COORDINATE INSTALLATION OF ALL UTILITIES AND UNDERGROUND ELEMENTS TO THE NORTH OF THE GARAGE WITH AOR TO LIMIT CONFLICTS WITH FUTURE WORK.
28. PAINT EXISTING METAL GUARDRAIL TO REMAIN.
29. LOCATION OF FIRE STANDPIPE. HOLD TIGHT TO WALLS. REFER TO PLUMBING DRAWINGS.
30. SCUPPER/DOWNSPOUT TO PARKING DECK, ROUTE DOWNSPOUT DOWN TO PARKING DECK WALL AND NORTH TO COLUMN BEFORE SPILLING DOWNSPOUT ONTO PARKING DECK.
31. WATER DRAIN PIPE FOR PLANTER. REFER TO CIVIL DRAWINGS.
32. WAVE-TO-OPEN DOOR OPERATOR SWITCH MOUNTED TO CURTAIN WALL MULLION. BASIS OF DESIGN: NORTON 704 TOUCHLESS WALL SWITCH.
33. WAVE-TO-OPEN DOOR OPERATOR SWITCH MOUNTED ON SWITCH POST. BASIS OF DESIGN: NORTON 500.
34. DOOR OPERATOR SWITCH POST ONLY WITH NO SWITCH. BASIS OF DESIGN: NORTON 530POST.
35. INFILL EXISTING OPENING LEFT FROM REMOVED MECHANICAL EQUIPMENT. INSTALL CMU FLUSH TO EXTERIOR FACE OF WALL. PAINT WALL AFTER INSTALLATION OF INFILL.
36. SCUPPER/DOWNSPOUT TO LEVEL 5 PARKING DECK BELOW.

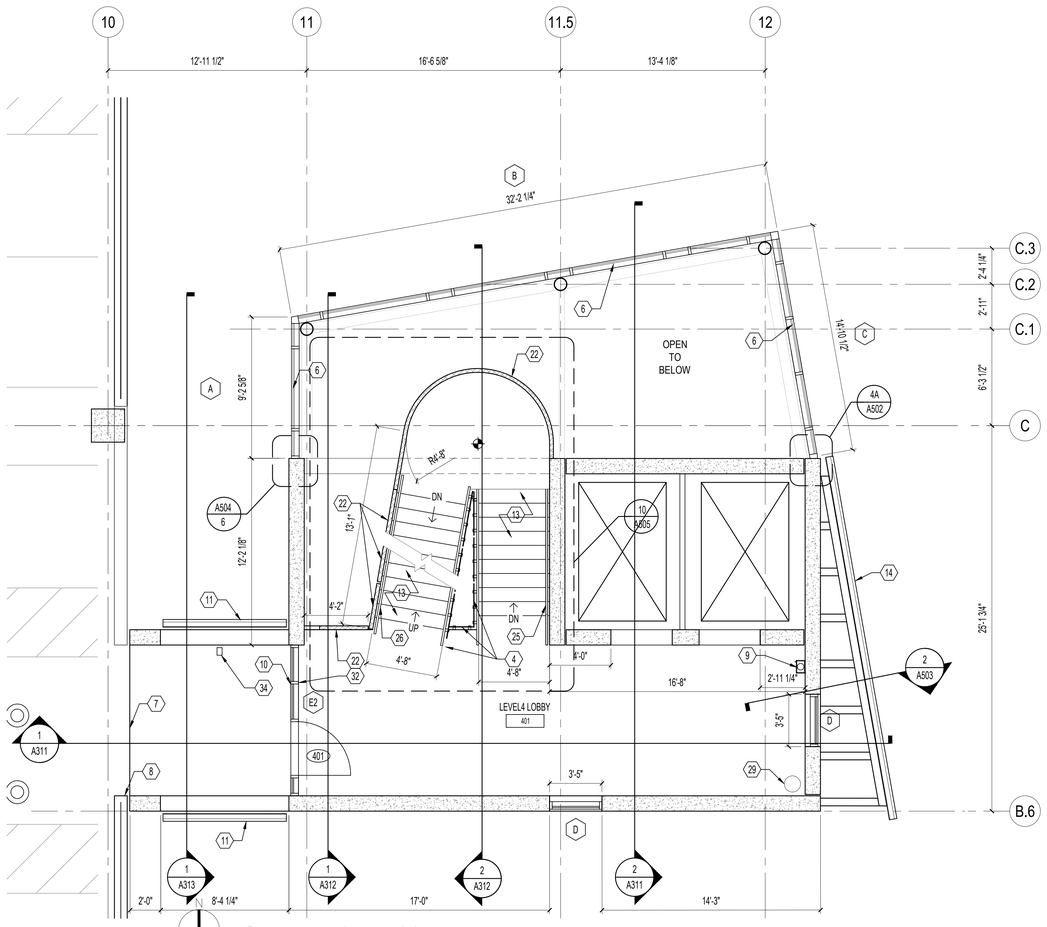

N

2 ENLARGED FLOOR PLAN - LEVEL 4

1/4"=1'-0"

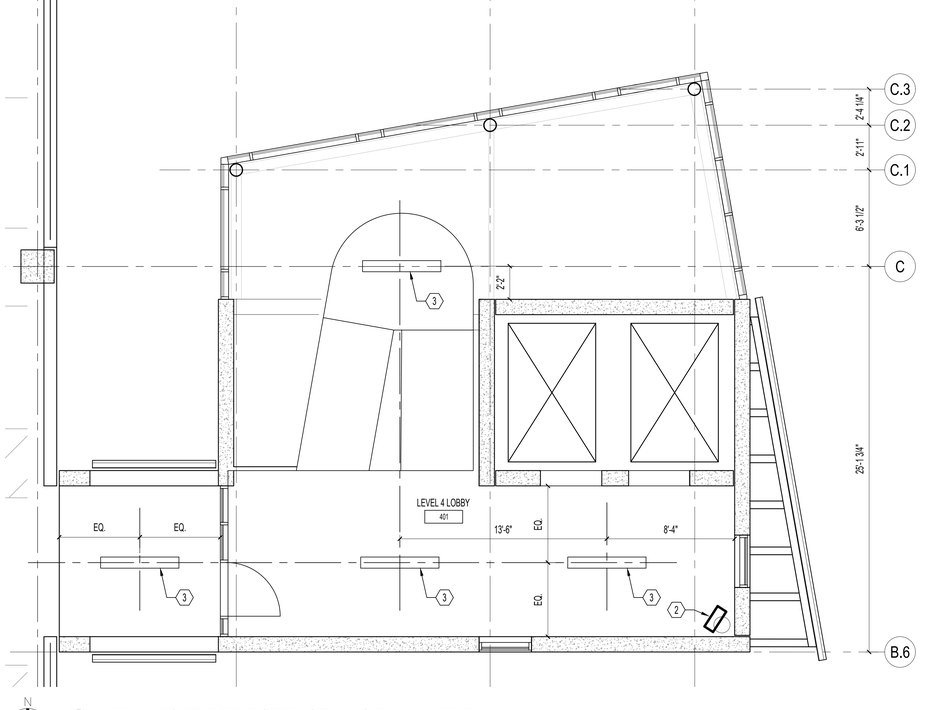

N

1 ENLARGED REFLECTED CEILING PLAN - LEVEL 4

1/4"=1'-0"

ISOMETRIC DIAGRAM

NTS

ISSUE FOR BID	08-09-2024
Revisions:	Date:

CONSULTANT

ARCHITECT/ENGINEER OF RECORD

BANCROFT ARCHITECTS + ENGINEERS
3300 Dundee Rd.
Northbrook, IL 60062
T: 847.952.9362
www.bancroft-ae.com

STAMP

LICENSED ARCHITECT 5913 CRISTINA D. ZAWISLAK MY COMMISSION EXPIRES NOVEMBER 30, 2025 STATE OF ILLINOIS

Office of Construction and Facilities Management

VA U.S. Department of Veterans Affairs

Drawing Title: ARCHITECTURAL- ENLARGED FLOOR AND REFLECTED CEILING PLANS - LEVEL 4

Approved: Project Director

Phase: ISSUE FOR BID

Project Title: PARKING RAMP EXPANSION

Location: 3495 BAILEY AVE., BUFFALO, NY 14215

Issue Date: 08-09-2024 | Checked: CZ | Drawn: II

Project Number: 528-18-375

Building Number: 29

Drawing Number: A404

K:\CCG_PROJECTS\2020\21121-113 - Parking Ramp (Buffalo, NY)\400- DesDocs\402- Drawings\WORKING\21-113_A404.dwg

6/14/2099 12:39:03 PM

VA FORM 08 - 6231

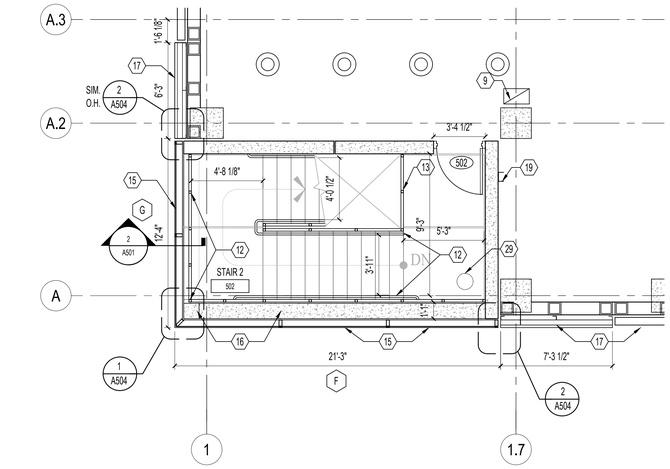

N

4 ENLARGED FLOOR PLAN - LEVEL 5

1/4"=1'-0"

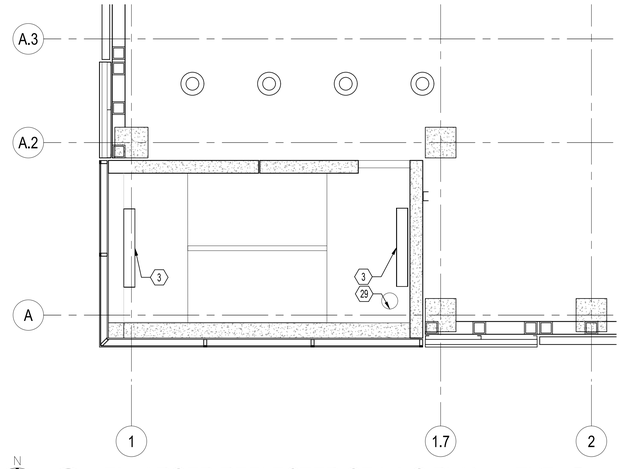

N

3 ENLARGED REFLECTED CEILING PLAN - LEVEL 5

1/4"=1'-0"

ENLARGED FLOOR PLAN GEN. NOTES

A. REFER TO SHEET GI002 FOR BID DEDUCT ALTERNATE DESCRIPTIONS.
B. SEE CIVIL, STRUCTURAL, FIRE PROTECTION, PLUMBING, MECHANICAL AND ELECTRICAL DRAWINGS FOR NEW WORK.
C. SEAL / FIRESTOP ALL OPENINGS IN NEW 1 HR. AND SMOKE RATED PARTITION WALLS AND FLOORS. INCLUDES ALL EXPOSED CONDUIT AND PIPING.
D. INFILL ANY VOIDS IN CONCRETE STRUCTURE, SLAB AND PRECAST SPANDREL PANELS BY DEMOLITION.
E. REFER TO SHEET A506 FOR WALL TYPES.
F. REFER TO A6 SERIES DRAWINGS FOR DOOR AND WINDOW INFORMATION.

(X) ENLARGED FLOOR PLAN KEY NOTES

* NOTE: NOT ALL NOTES MAY APPLY TO THIS SHEET.

1. ALUMINUM LOUVER VENT AND MOTORIZED DAMPER. LOUVER FINISH TO MATCH CURTAIN WALL MULLIONS. REFER TO MECHANICAL DRAWINGS FOR MORE INFORMATION.
2. MECHANICAL UNIT. REFER TO MECHANICAL DRAWINGS.
3. LIGHT FIXTURE. REFER TO ELECTRICAL DRAWINGS.
4. LAMINATED GLASS GUARDRAILS ON STAINLESS STEEL STANDOFFS. PROVIDE STAINLESS STEEL HANDRAIL MOUNTED TO GLASS. REFER SHEET A505 FOR MORE INFORMATION. BID DEDUCT #8: SUBSTITUTE LAMINATE GLASS GUARDRAIL FOR PAINTED METAL GUARDRAIL TO MATCH OTHER PROJECT LOCATIONS.
5. CONCRETE BOLLARD TO MATCH EXISTING.
6. NEW CURTAINWALL GLAZING SYSTEM TO MATCH EXISTING. REFER TO ELEVATIONS AND BID DEDUCT ALTERNATES FOR ADDITIONAL INFORMATION.
7. STAINLESS STEEL EXPANSION JOINT COVER WITH ANTI-SLIP FILLER AND BEVELED EDGES. ANCHOR WITH COUNTERSUNK ANCHORS IN BED OF MASTIC. REFER DETAIL 5/A601.
8. NEW CONCRETE COLUMN. REFER TO STRUCTURAL FOR MORE INFORMATION.
9. FIRE EXTINGUISHER CABINET. REFER TO SHEET A505 FOR MORE INFORMATION.
10. NEW STOREFRONT GLAZING SYSTEM TO MATCH EXISTING. REFER TO ELEVATIONS FOR MORE INFORMATION.
11. ALUMINUM ARCHITECTURAL SCREEN SYSTEM (TO MATCH EXISTING) MOUNTED ON CLIP ANGLES TO PRECAST STRUCTURE. REFER TO WALL SECTIONS FOR MORE INFORMATION.
12. NEW STAINLESS STEEL HANDRAIL AND PAINTED STEEL GUARDRAIL (TO MATCH EXISTING). REFER TO A501 AND A505 FOR MORE INFORMATION.
13. NEW PRECAST CONCRETE STAIRS. REFER TO STRUCTURAL FOR MORE INFORMATION.
14. ALUMINUM ARCHITECTURAL SCREEN SYSTEM (TO MATCH EXISTING) ATTACHMENT TO PRECAST WALL SHALL BE DELEGATED DESIGN BY SCREEN SYSTEM MANUFACTURER. COORDINATE WITH PRECAST AND SCREEN SYSTEM MANUFACTURER.
15. NEW CURTAINWALL GLAZING SYSTEM TO MATCH EXISTING. INSTALL IN ALIGNMENT WITH EXISTING SYSTEM BELOW. REFER TO ELEVATIONS AND BID DEDUCT ALTERNATES FOR ADDITIONAL INFORMATION.
16. NEW P.C. CONCRETE COLUMN / BEAM. REFER TO STRUCTURAL FOR MORE INFORMATION.
17. NEW ALUMINUM ARCHITECTURAL SCREEN SYSTEM TO MATCH EXISTING. INSTALL IN ALIGNMENT WITH EXISTING SYSTEM BELOW. REFER TO ELEVATIONS & WALL SECTIONS FOR ADDITIONAL INFORMATION. PROVIDE STRUCTURAL STEEL FRAMING AT LEVEL 5.
18. ROOF ASSEMBLY R-1. SEE DETAIL 5/A406.
19. SCUPPER / DOWNSPOUT TO ROOF BELOW.
20. PROVIDE CANTILEVERED ALUMINUM SUNSHADE SYSTEM AND ASSOCIATED ANCHOR COMPONENTS TO MATCH EXISTING. COORDINATE WITH PLANS, ELEVATIONS AND DETAILS.
21. PROVIDE CANTILEVERED ALUMINUM SUNSHADE SYSTEM AND ASSOCIATED ANCHOR COMPONENTS TO MATCH EXISTING. COORDINATE WITH PLANS, ELEVATIONS AND DETAILS.
22. PERFORATED METAL SCREEN WALL WITH CUSTOM PERFORATION PATTERN.
23. PAINTED STEEL 'RESTRICTED' ACCESS GATE. REFER TO DETAILS ON SHEET A506 FOR MORE INFORMATION.
24. MODULAR AWNING SYSTEM (BASIS OF DESIGN: CONSTRUCTION SPECIALTIES).
25. WALL MOUNTED STAINLESS STEEL HANDRAIL.
26. STAINLESS STEEL HANDRAIL MOUNTED TO PERFORATED METAL SCREEN WALL.
27. FUTURE ACCESS TUNNEL CONNECTION TO MEDICAL CENTER BUILDING. COORDINATE INSTALLATION OF ALL UTILITIES AND UNDERGROUND ELEMENTS TO THE NORTH OF THE GARAGE WITH AOR TO LIMIT CONFLICTS WITH FUTURE WORK.
28. PAINT EXISTING METAL GUARDRAIL TO REMAIN.
29. LOCATION OF FIRE STANDPIPE. HOLD TIGHT TO WALLS. REFER TO PLUMBING DRAWINGS.
30. SCUPPER/DOWNSPOUT TO PARKING DECK, ROUTE DOWNSPOUT DOWN TO PARKING DECK WALL AND NORTH TO COLUMN BEFORE SPILLING DOWNSPOUT ONTO PARKING DECK.
31. WATER DRAIN PIPE FOR PLANTER. REFER TO CIVIL DRAWINGS.
32. WAVE-TO-OPEN DOOR OPERATOR SWITCH MOUNTED TO CURTAIN WALL MULLION. BASIS OF DESIGN: NORTON 704 TOUCHLESS WALL SWITCH.
33. WAVE-TO-OPEN DOOR OPERATOR SWITCH MOUNTED ON SWITCH POST. BASIS OF DESIGN: NORTON 500.
34. DOOR OPERATOR SWITCH POST ONLY WITH NO SWITCH. BASIS OF DESIGN: NORTON 530POST.
35. INFILL EXISTING OPENING LEFT FROM REMOVED MECHANICAL EQUIPMENT. INSTALL CMU FLUSH TO EXTERIOR FACE OF WALL. PAINT WALL AFTER INSTALLATION OF INFILL.
36. SCUPPER/DOWNSPOUT TO LEVEL 5 PARKING DECK BELOW.

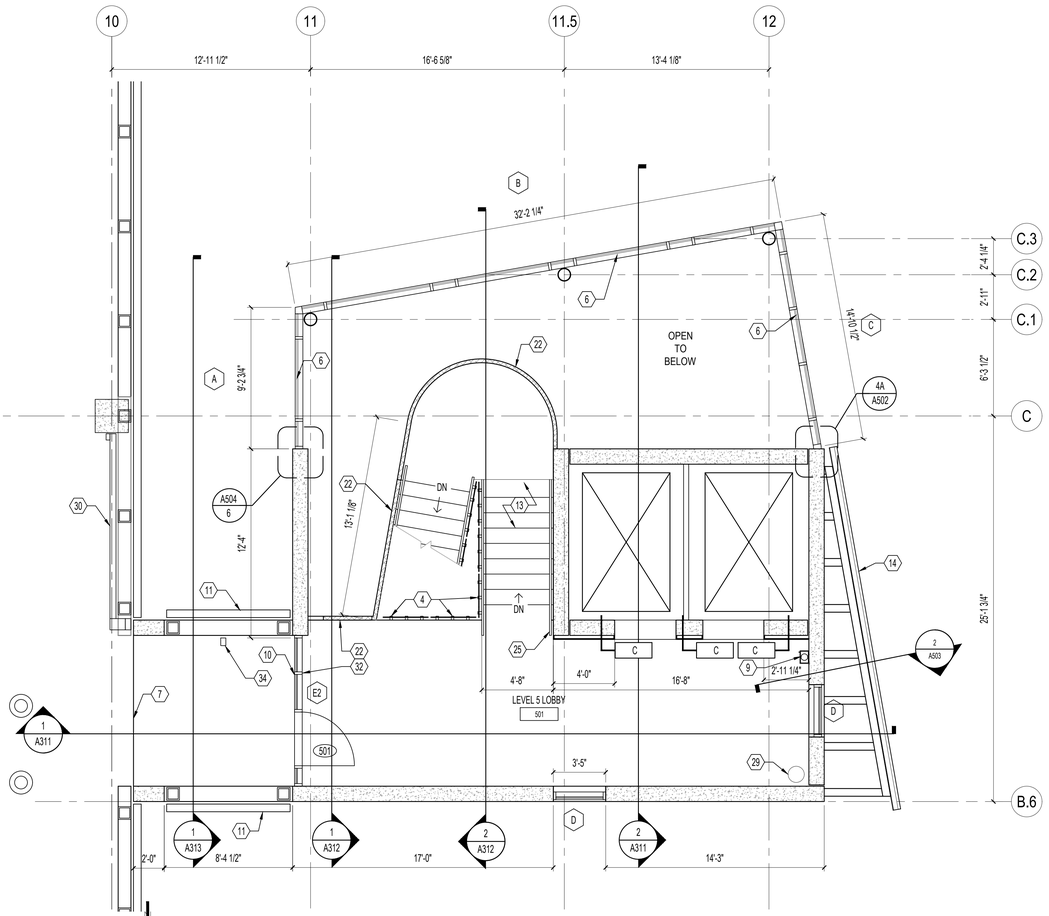

2 ENLARGED FLOOR PLAN - LEVEL 5

1/4"=1'-0"

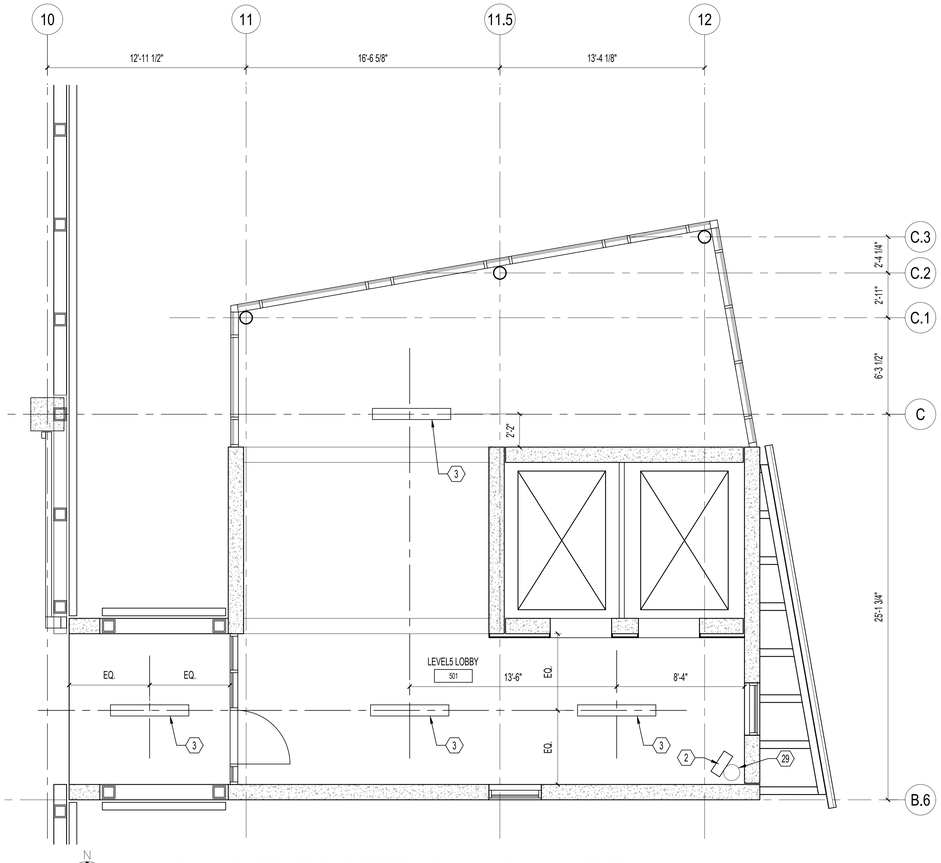

N

1 ENLARGED REFLECTED CEILING PLAN - LEVEL 5

1/4"=1'-0"

NEW STAIR / ELEVATOR TOWER

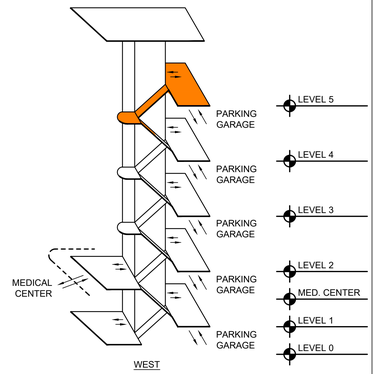

ISOMETRIC DIAGRAM

NTS

ISSUE FOR BID	08-09-2024
Revisions:	Date:

CONSULTANT

ARCHITECT/ENGINEER OF RECORD

BANCROFT ARCHITECTS + ENGINEERS
3300 Dundee Rd.
Northbrook, IL 60062
T: 847.952.9362
www.bancroft-ae.com

STAMP

LICENSED ARCHITECT 5/1/21 CRISTINA D. ZANFINO 001.020559 STATE OF NEW YORK

Office of Construction and Facilities Management

VA U.S. Department of Veterans Affairs

Drawing Title	ARCHITECTURAL- ENLARGED FLOOR AND REFLECTED CEILING PLANS - LEVEL 5
Phase	ISSUE FOR BID
Approved: Project Director	
Project Title	PARKING RAMP EXPANSION
Project Number	528-18-375
Building Number	29
Location	3495 BAILEY AVE., BUFFALO, NY 14215
Drawing Number	A405
Issue Date	08-09-2024
Checked	CZ
Drawn	II

K:\CCG_PROJECTS\2021\21-113 - Parking Ramp (Buffalo, NY)\400- DesDocs\402- Drawings\WORKING\21-113_A405.dwg

6/14/2009 12:39:03 PM

VA FORM 08 - 6231

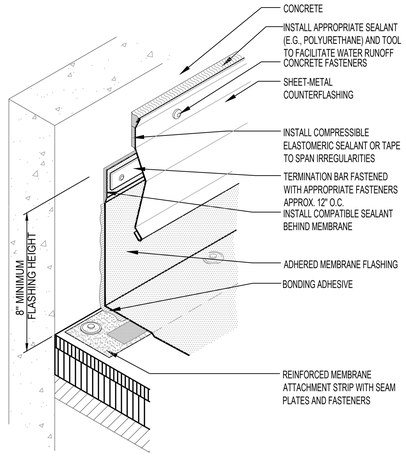

3 TYPICAL ROOF DETAIL AT CONCRETE WALL
NTS

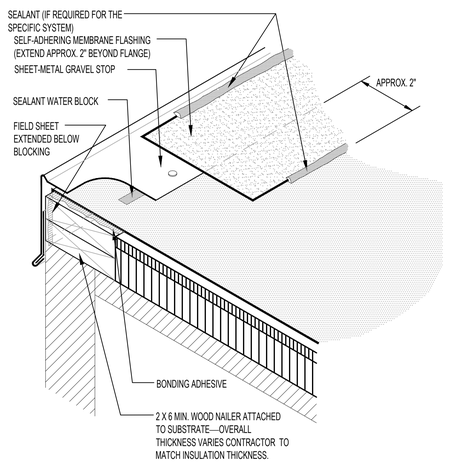

4 TYPICAL EDGE-METAL FLASHING DETAIL
NTS

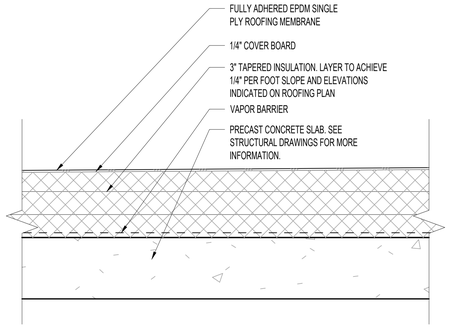

5 ROOF ASSEMBLY - R-1
1−1/2"=1'−0"

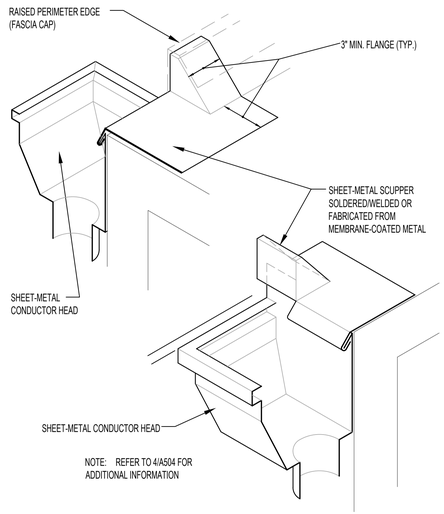

6 TYPICAL SCUPPER DETAIL
NTS

ENLARGED FLOOR PLAN GEN. NOTES

A. REFER TO SHEET GI002 FOR BID DEDUCT ALTERNATE DESCRIPTIONS.
B. SEE CIVIL, STRUCTURAL, FIRE PROTECTION, PLUMBING, MECHANICAL AND ELECTRICAL DRAWINGS FOR NEW WORK.
C. SEAL / FIRESTOP ALL OPENINGS IN NEW 1 HR. AND SMOKE RATED PARTITION WALLS AND FLOORS. INCLUDES ALL EXPOSED CONDUIT AND PIPING.
D. INFILL ANY VOIDS IN CONCRETE STRUCTURE, SLAB AND PRECAST SPANDREL PANELS BY DEMOLITION.
E. REFER TO SHEET A506 FOR WALL TYPES.
F. REFER TO A6 SERIES DRAWINGS FOR DOOR AND WINDOW INFORMATION.

(X) ENLARGED FLOOR PLAN KEY NOTES

* NOTE: NOT ALL NOTES MAY APPLY TO THIS SHEET.
1. ALUMINUM LOUVER VENT AND MOTORIZED DAMPER. LOUVER FINISH TO MATCH CURTAIN WALL MULLIONS. REFER TO MECHANICAL DRAWINGS FOR MORE INFORMATION.
2. MECHANICAL UNIT. REFER TO MECHANICAL DRAWINGS.
3. LIGHT FIXTURE. REFER TO ELECTRICAL DRAWINGS.
4. LAMINATED GLASS GUARDRAILS ON STAINLESS STEEL STANDOFFS. PROVIDE STAINLESS STEEL HANDRAIL MOUNTED TO GLASS. REFER SHEET A505 FOR MORE INFORMATION. BID DEDUCT #8: SUBSTITUTE LAMINATE GLASS GUARDRAIL FOR PAINTED METAL GUARDRAIL TO MATCH OTHER PROJECT LOCATIONS.
5. CONCRETE BOLLARD TO MATCH EXISTING.
6. NEW CURTAINWALL GLAZING SYSTEM TO MATCH EXISTING. REFER TO ELEVATIONS AND BID DEDUCT ALTERNATES FOR ADDITIONAL INFORMATION.
7. STAINLESS STEEL EXPANSION JOINT COVER WITH ANTI-SLIP FILLER AND BEVELED EDGES. ANCHOR WITH COUNTERSUNK ANCHORS IN BED OF MASTIC. REFER DETAIL 5/A601.
8. NEW CONCRETE COLUMN. REFER TO STRUCTURAL FOR MORE INFORMATION.
9. FIRE EXTINGUISHER CABINET. REFER TO SHEET A505 FOR MORE INFORMATION.
10. NEW STOREFRONT GLAZING SYSTEM TO MATCH EXISTING. REFER TO ELEVATIONS FOR MORE INFORMATION.
11. ALUMINUM ARCHITECTURAL SCREEN SYSTEM (TO MATCH EXISTING) MOUNTED ON CLIP ANGLES TO PRECAST STRUCTURE. REFER TO WALL SECTIONS FOR MORE INFORMATION.
12. NEW STAINLESS STEEL HANDRAIL AND PAINTED STEEL GUARDRAIL (TO MATCH EXISTING). REFER TO A501 AND A505 FOR MORE INFORMATION.
13. NEW PRECAST CONCRETE STAIRS. REFER TO STRUCTURAL FOR MORE INFORMATION.
14. ALUMINUM ARCHITECTURAL SCREEN SYSTEM (TO MATCH EXISTING) ATTACHMENT TO PRECAST WALL SHALL BE DELEGATED DESIGN BY SCREEN SYSTEM MANUFACTURER. COORDINATE WITH PRECAST AND SCREEN SYSTEM MANUFACTURER.
15. NEW CURTAINWALL GLAZING SYSTEM TO MATCH EXISTING. INSTALL IN ALIGNMENT WITH EXISTING SYSTEM BELOW. REFER TO ELEVATIONS AND BID DEDUCT ALTERNATES FOR ADDITIONAL INFORMATION.
16. NEW P.C. CONCRETE COLUMN / BEAM. REFER TO STRUCTURAL FOR MORE INFORMATION.
17. NEW ALUMINUM ARCHITECTURAL SCREEN SYSTEM TO MATCH EXISTING. INSTALL IN ALIGNMENT WITH EXISTING SYSTEM BELOW. REFER TO ELEVATIONS & WALL SECTIONS FOR ADDITIONAL INFORMATION. PROVIDE STRUCTURAL STEEL FRAMING AT LEVEL 5.
18. ROOF ASSEMBLY R-1. SEE DETAIL 5/A406.
19. SCUPPER / DOWNSPOUT TO ROOF BELOW.
20. PROVIDE CANTILEVERED ALUMINUM SUNSHADE SYSTEM AND ASSOCIATED ANCHOR COMPONENTS TO MATCH EXISTING. COORDINATE WITH PLANS, ELEVATIONS AND DETAILS.
21. PROVIDE CANTILEVERED ALUMINUM SUNSHADE SYSTEM AND ASSOCIATED ANCHOR COMPONENTS TO MATCH EXISTING. COORDINATE WITH PLANS, ELEVATIONS AND DETAILS.
22. PERFORATED METAL SCREEN WALL WITH CUSTOM PERFORATION PATTERN.
23. PAINTED STEEL 'RESTRICTED' ACCESS GATE. REFER TO DETAILS ON SHEET A506 FOR MORE INFORMATION.
24. MODULAR AWNING SYSTEM (BASIS OF DESIGN: CONSTRUCTION SPECIALTIES).
25. WALL MOUNTED STAINLESS STEEL HANDRAIL.
26. STAINLESS STEEL HANDRAIL MOUNTED TO PERFORATED METAL SCREEN WALL.
27. FUTURE ACCESS TUNNEL CONNECTION TO MEDICAL CENTER BUILDING. COORDINATE INSTALLATION OF ALL UTILITIES AND UNDERGROUND ELEMENTS TO THE NORTH OF THE GARAGE WITH AOR TO LIMIT CONFLICTS WITH FUTURE WORK.
28. PAINT EXISTING METAL GUARDRAIL TO REMAIN.
29. LOCATION OF FIRE STANDPIPE. HOLD TIGHT TO WALLS. REFER TO PLUMBING DRAWINGS.
30. SCUPPER/DOWNSPOUT TO PARKING DECK, ROUTE DOWNSPOUT DOWN TO PARKING DECK WALL AND NORTH TO COLUMN BEFORE SPILLING DOWNSPOUT ONTO PARKING DECK.
31. WATER DRAIN PIPE FOR PLANTER. REFER TO CIVIL DRAWINGS.
32. WAVE-TO-OPEN DOOR OPERATOR SWITCH MOUNTED TO CURTAIN WALL MULLION. BASIS OF DESIGN: NORTON 704 TOUCHLESS WALL SWITCH.
33. WAVE-TO-OPEN DOOR OPERATOR SWITCH MOUNTED ON SWITCH POST. BASIS OF DESIGN: NORTON 500.
34. DOOR OPERATOR SWITCH POST ONLY WITH NO SWITCH. BASIS OF DESIGN: NORTON 530POST.
35. INFILL EXISTING OPENING LEFT FROM REMOVED MECHANICAL EQUIPMENT. INSTALL CMU FLUSH TO EXTERIOR FACE OF WALL. PAINT WALL AFTER INSTALLATION OF INFILL.
36. SCUPPER/DOWNSPOUT TO LEVEL 5 PARKING DECK BELOW.

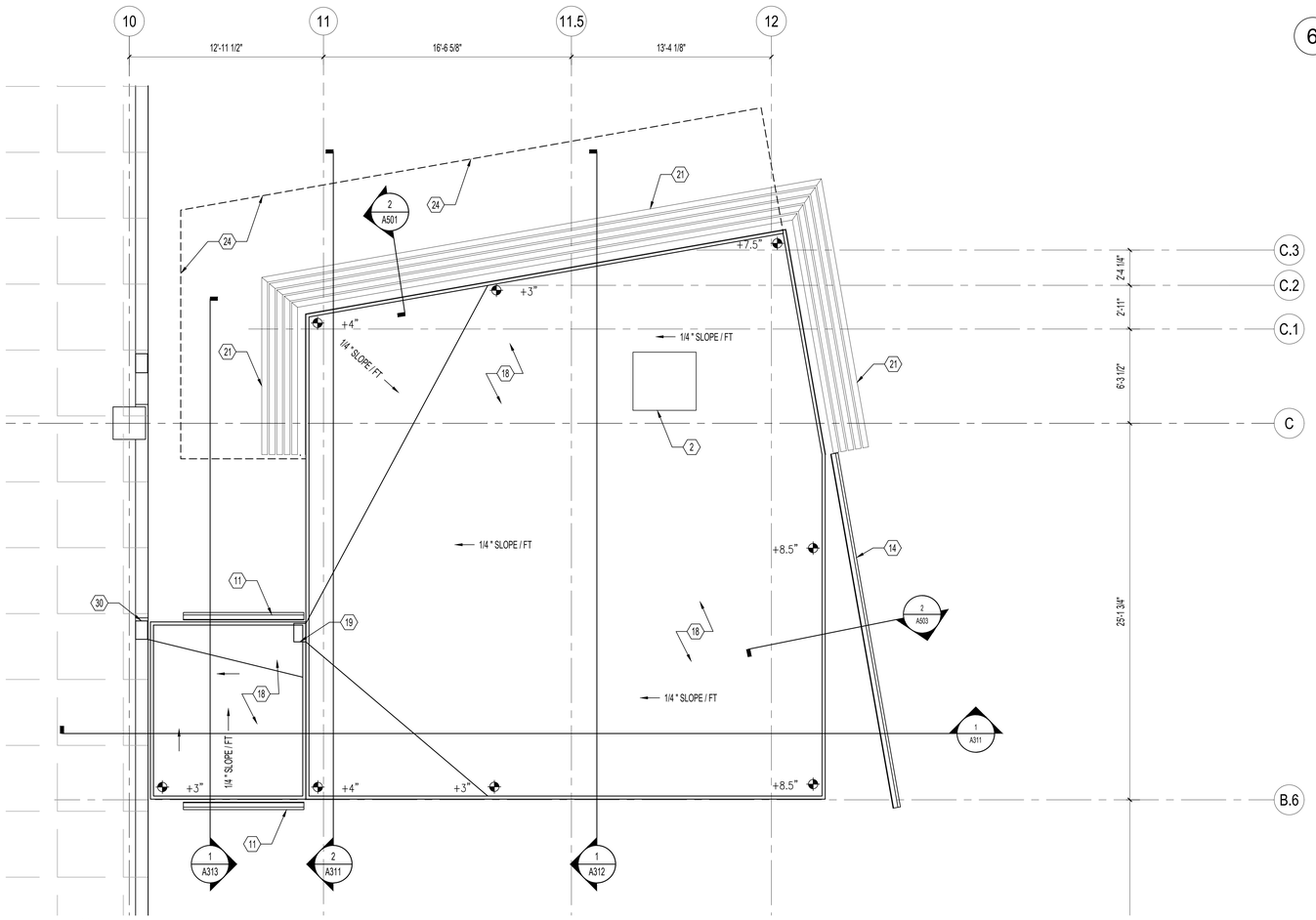

1 ENLARGED ROOF PLAN-STAIR 1
1/4"=1'−0"

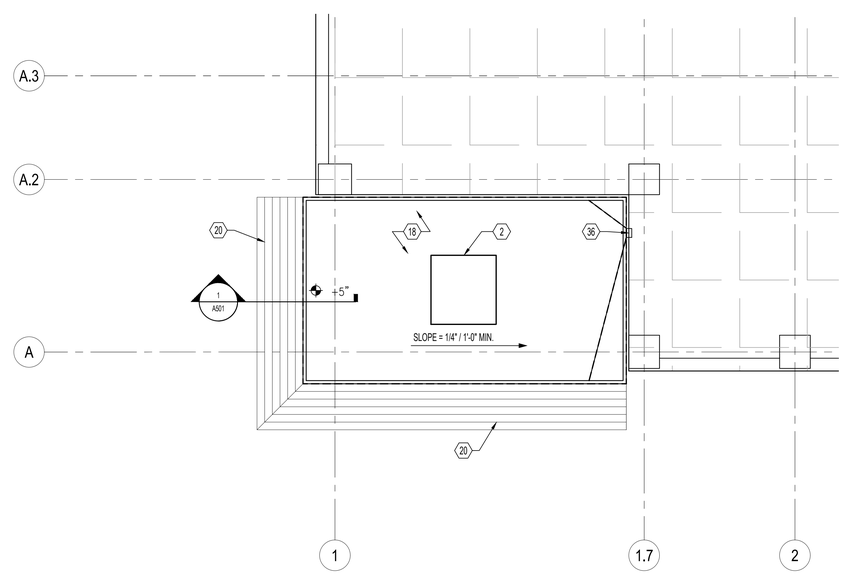

2 ENLARGED ROOF PLAN-STAIR 2
1/4"=1'−0"

ISSUE FOR BID	08-09-2024
Revisions:	Date:

CONSULTANT

ARCHITECT/ENGINEER OF RECORD

BANCROFT ARCHITECTS + ENGINEERS
3300 Dundee Rd.
Northbrook, IL 60062
T: 847.952.9362
www.bancroft-ae.com

STAMP

LICENSED ARCHITECT — CHETAN D. ZAVERI — 001-020559 — 08/31/2010 — STATE OF ILLINOIS

Office of Construction and Facilities Management

VA U.S. Department of Veterans Affairs

Drawing Title: ARCHITECTURAL- ENLARGED ROOF PLANS	Phase: ISSUE FOR BID	Project Title: PARKING RAMP EXPANSION	Project Number: 528-18-375
			Building Number: 29
Approved: Project Director		Location: 3495 BAILEY AVE., BUFFALO, NY 14215	Drawing Number: A406
		Issue Date: 08-09-2024 / Checked: CZ / Drawn: II	

K:\CCG_PROJECTS\2020\121-113 - Parking Ramp (Buffalo, NY)\400- DesiDocs\402- Drawings\WORKING\21-113_A406.dwg
6/14/2009 12:39:03 PM

VA FORM 08 - 6231

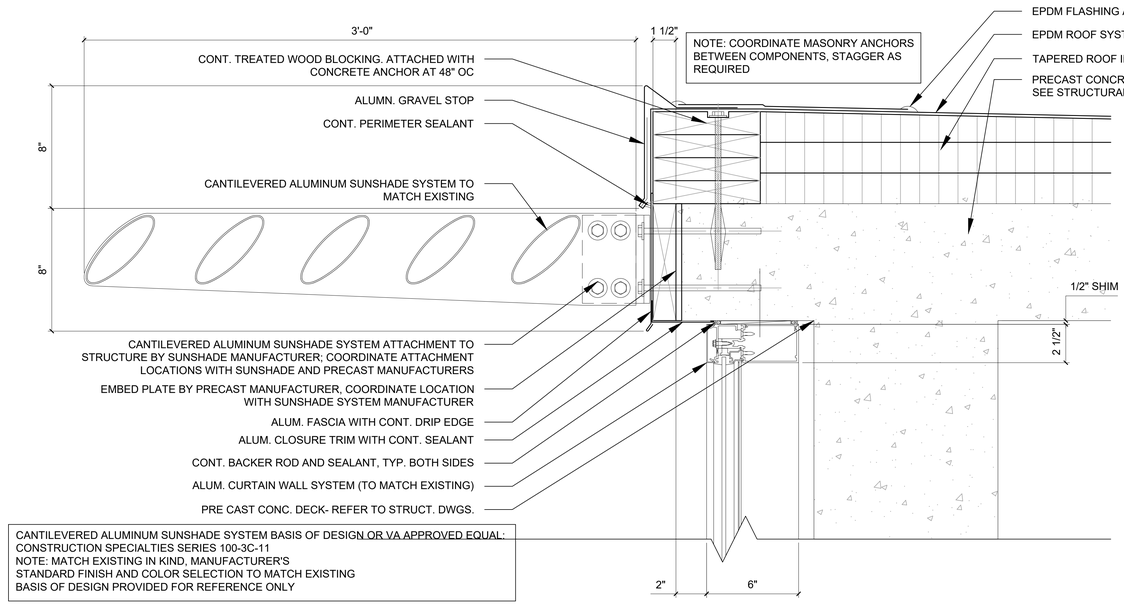

2 SUNSHADE DETAIL
3"=1'-0"

CURTAIN WALL SYSTEM CONTRACTOR SHALL PROVIDE FOR THE TOTAL HEIGHT OF THE CURTAIN WALL ELEVATION AND PROVIDE NECESSARY SYSTEM COMPONENTS TO ACCOMMODATE SUCH DEFLECTION (TYP. ALL LOCATIONS.)

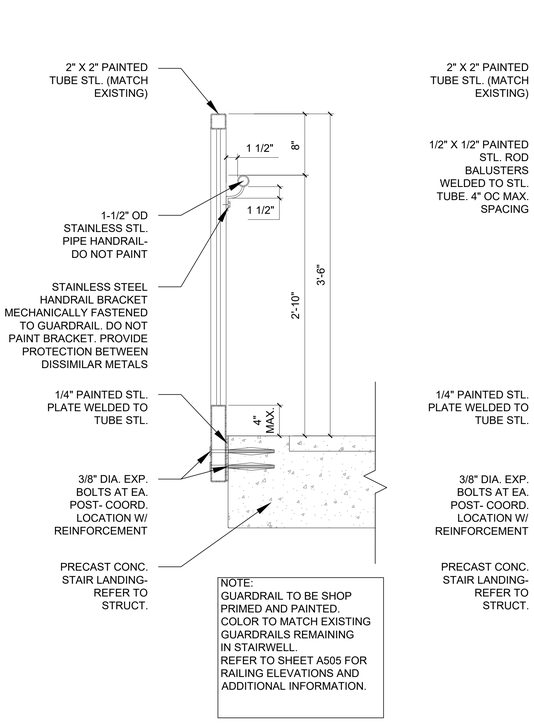

5 HANDDRAIL DETAIL
1-1/2"=1'-0"

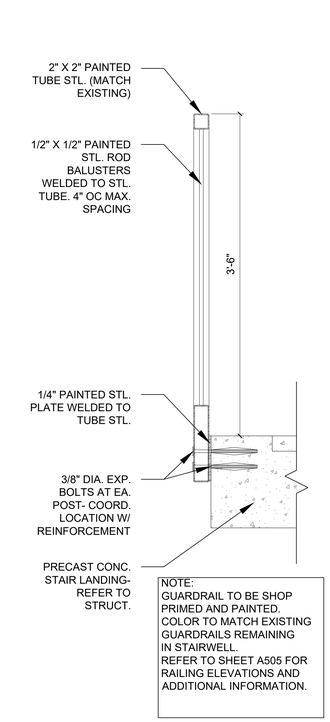

4 GUARDRAIL DETAIL
1-1/2"=1'-0"

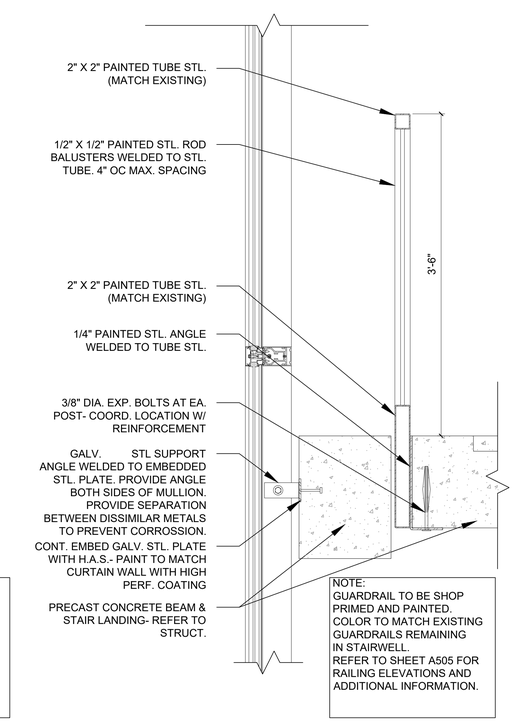

3 GUARDRAIL DETAIL
1-1/2"=1'-0"

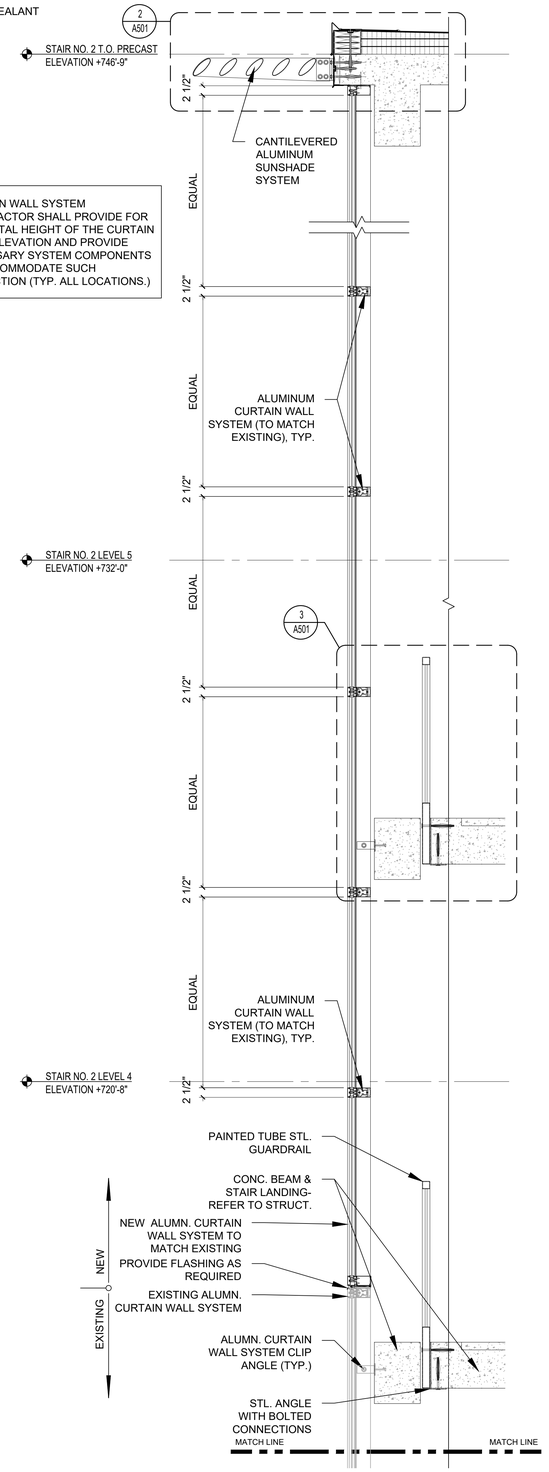

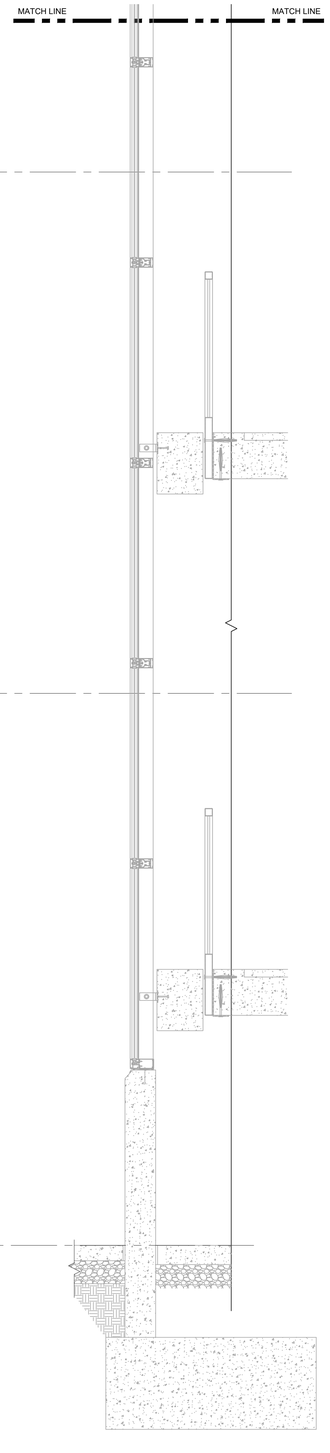

1 STAIR NO. 2 WALL SECTION
3/4"=1'-0"

ISSUE FOR BID	08-09-2024
Revisions:	Date:

CONSULTANT

ARCHITECT/ENGINEER OF RECORD

BANCROFT ARCHITECTS + ENGINEERS
3300 Dundee Rd.
Northbrook, IL 60062
T: 847.952.9362
www. bancroft-ae.com

STAMP

LICENSED ARCHITECT — CRISTIAN D. ZAVARUS — 001-020655 — STATE OF ILLINOIS — 5/31/25

Office of Construction and Facilities Management

VA U.S. Department of Veterans Affairs

Drawing Title: ARCHITECTURAL- WALL SECTIONS AND DETAILS	Phase: ISSUE FOR BID	Project Title: PARKING RAMP EXPANSION	Project Number: 528-18-375
			Building Number: 29
Approved: Project Director		Location: 3495 BAILEY AVE., BUFFALO, NY 14215	Drawing Number: A501
		Issue Date: 08-09-2024 / Checked: CZ / Drawn: II	

K:\CCG_PROJECTS\2021\21-113 - Parking Ramp (Buffalo, NY)\400- Dwr\Docs\402- Drawings\WORKING\21-113_A501.dwg
6/14/2009 12:39:03 PM

VA FORM 08 - 6231

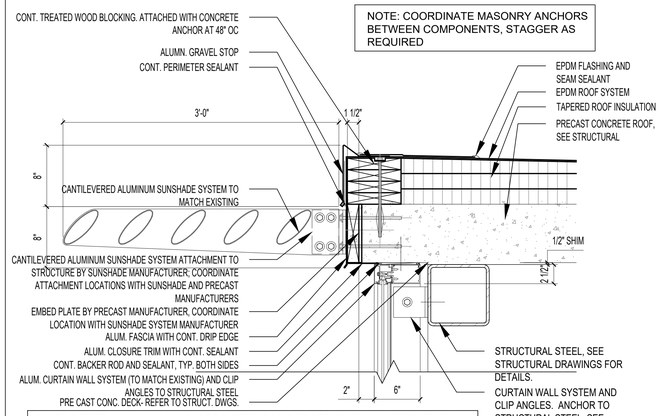

NOTE: COORDINATE MASONRY ANCHORS BETWEEN COMPONENTS, STAGGER AS REQUIRED

CANTILEVERED ALUMINUM SUNSHADE SYSTEM BASIS OF DESIGN OR VA APPROVED EQUAL:
CONSTRUCTION SPECIALTIES SERIES 100-3C-11
NOTE: MATCH EXISTING IN KIND, MANUFACTURER'S STANDARD FINISH AND COLOR SELECTION TO MATCH EXISTING
BASIS OF DESIGN PROVIDED FOR REFERENCE ONLY

5 SUNSHADE DETAIL AT NEW TOWER
1–1/2"=1'–0"

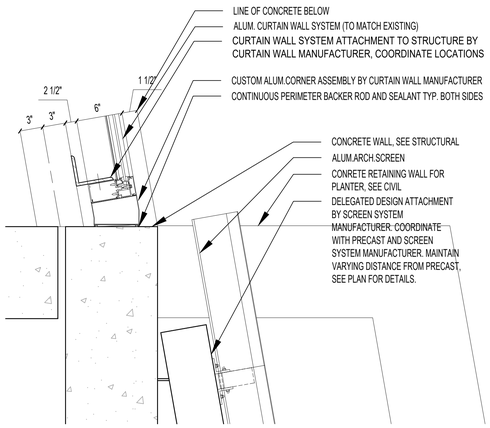

4A PLAN DETAIL
1–1/2"=1'–0"

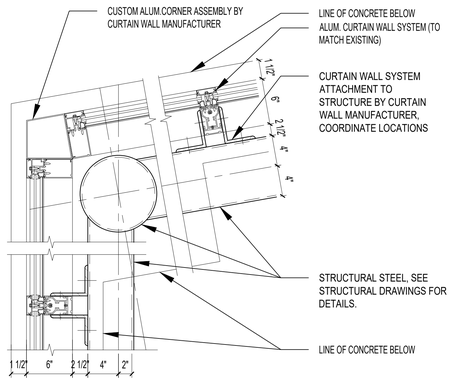

4 PLAN DETAIL
1–1/2"=1'–0"

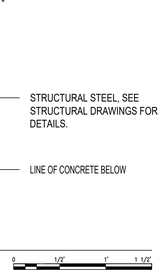

ATTACHMENT OF SCREEN SYSTEM TO PRECAST CONCRETE SPANDREL IS DELEGATED DESIGN. SCREEN MANUFACTURER TO SUBMIT STAMPED AND SIGNED CALCULATIONS AND DRAWINGS TO ARCHITECT FOR REVIEW

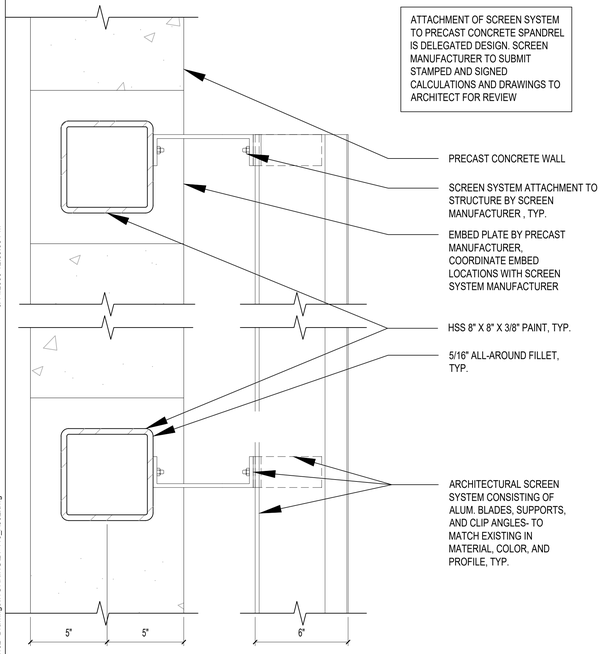

3 PLAN DETAIL
3"=1'–0"

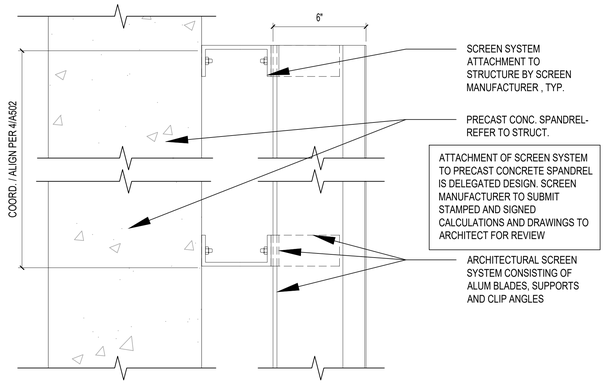

2 PLAN DETAIL
3"=1'–0"

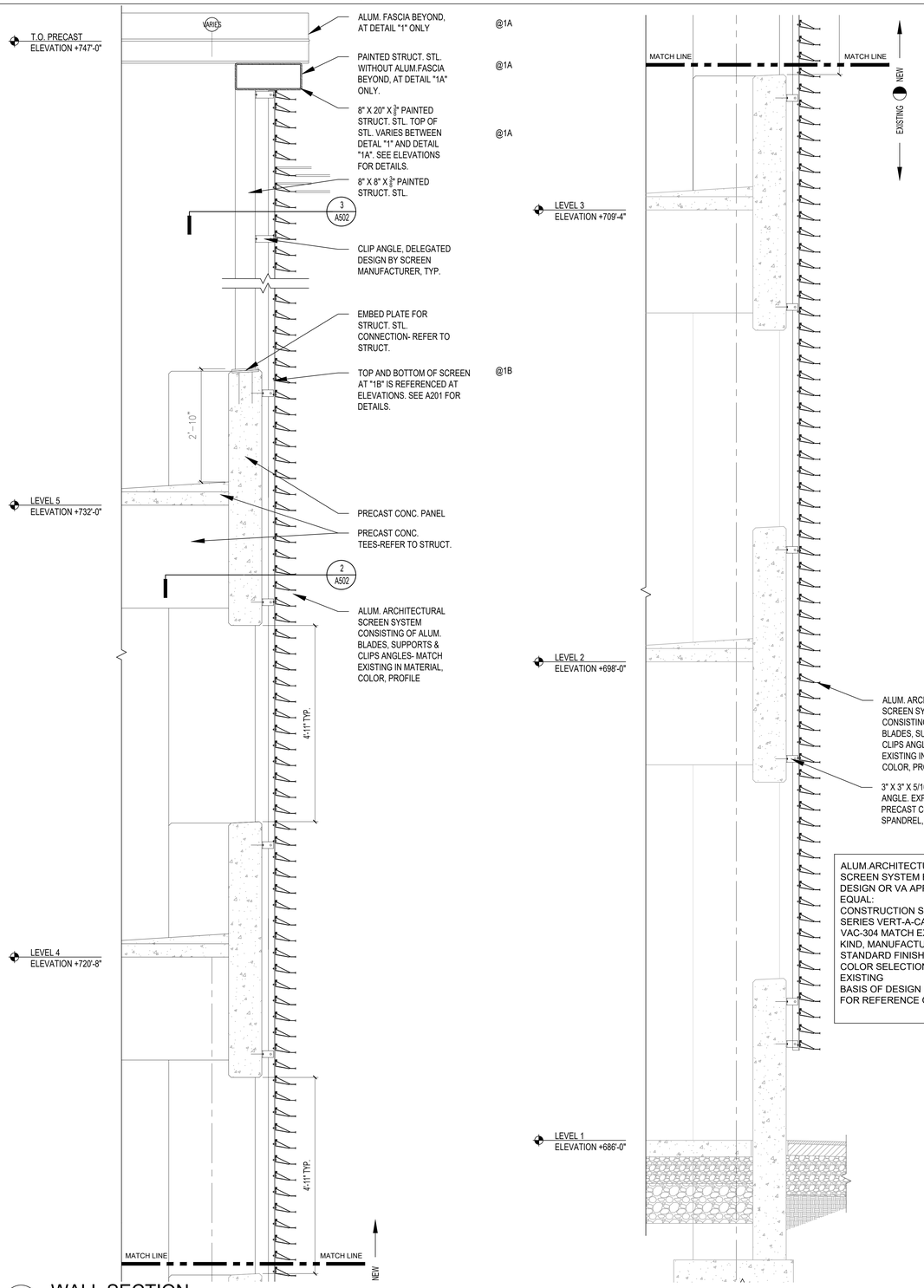

ALUM.ARCHITECTURAL SCREEN SYSTEM BASIS OF DESIGN OR VA APPROVED EQUAL:
CONSTRUCTION SPECIALTIES SERIES VERT-A-CADE MODEL VAC-304 MATCH EXISTING IN KIND, MANUFACTURER'S STANDARD FINISH AND COLOR SELECTION TO MATCH EXISTING
BASIS OF DESIGN PROVIDED FOR REFERENCE ONLY

1 WALL SECTION
3/4"=1'–0"

1A 1B

NOTE: SEE SECTION KEYNOTES ABOVE FOR "1A" ONLY AND "1B" ONLY CONDITIONS

ISSUE FOR BID	08-09-2024
Revisions:	Date:

CONSULTANT

ARCHITECT/ENGINEER OF RECORD

BANCROFT ARCHITECTS + ENGINEERS
3300 Dundee Rd.
Northbrook, IL 60062
T: 847.952.9362
www.bancroft-ae.com

STAMP

REGISTERED ARCHITECT 5418 CHUNHUA D. ZHANG MY COMMISSION EXPIRES NOVEMBER 30, 2024 STATE OF ILLINOIS

Office of Construction and Facilities Management

VA U.S. Department of Veterans Affairs

Drawing Title: ARCHITECTURAL- WALL SECTIONS AND DETAILS	Phase: ISSUE FOR BID	Project Title: PARKING RAMP EXPANSION	Project Number: 528-18-375
			Building Number: 29
Approved: Project Director		Location: 3495 BAILEY AVE., BUFFALO, NY 14215	Drawing Number: A502
		Issue Date: 08-09-2024 / Checked: CZ / Drawn: II	

K:\CCG_PROJECTS\2021\21-113 - Parking Ramp (Buffalo, NY)\400- DesDocs\402- Drawings\WORKING\21-113_A502.dwg
6/14/2099 12:39:03 PM

VA FORM 08 - 6231

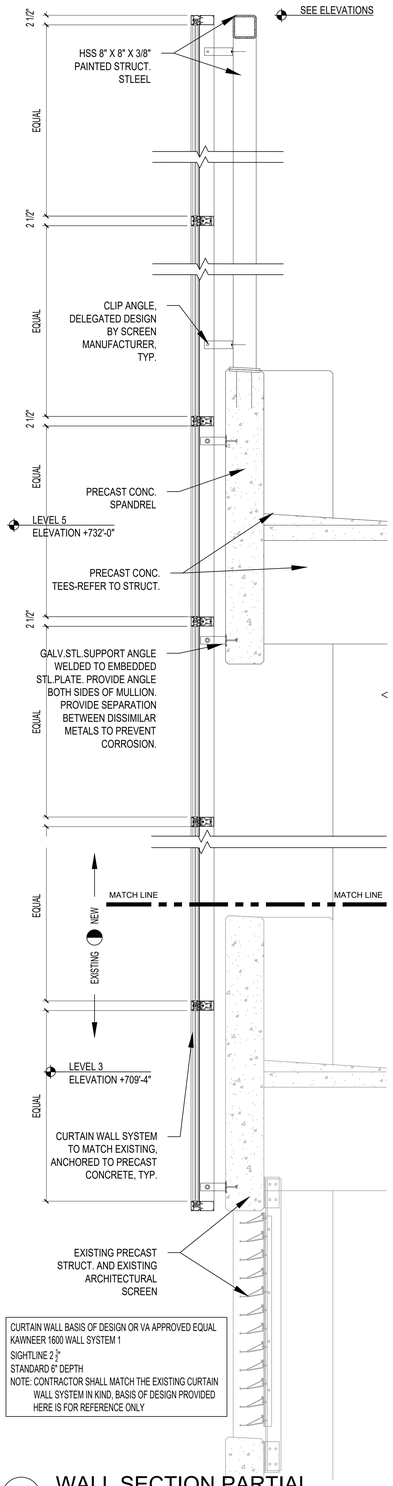

CURTAIN WALL BASIS OF DESIGN OR VA APPROVED EQUAL
KAWNEER 1600 WALL SYSTEM 1
SIGHTLINE 2 ½"
STANDARD 6" DEPTH
NOTE: CONTRACTOR SHALL MATCH THE EXISTING CURTAIN WALL SYSTEM IN KIND, BASIS OF DESIGN PROVIDED HERE IS FOR REFERENCE ONLY

3 WALL SECTION PARTIAL

3/4"=1'-0"

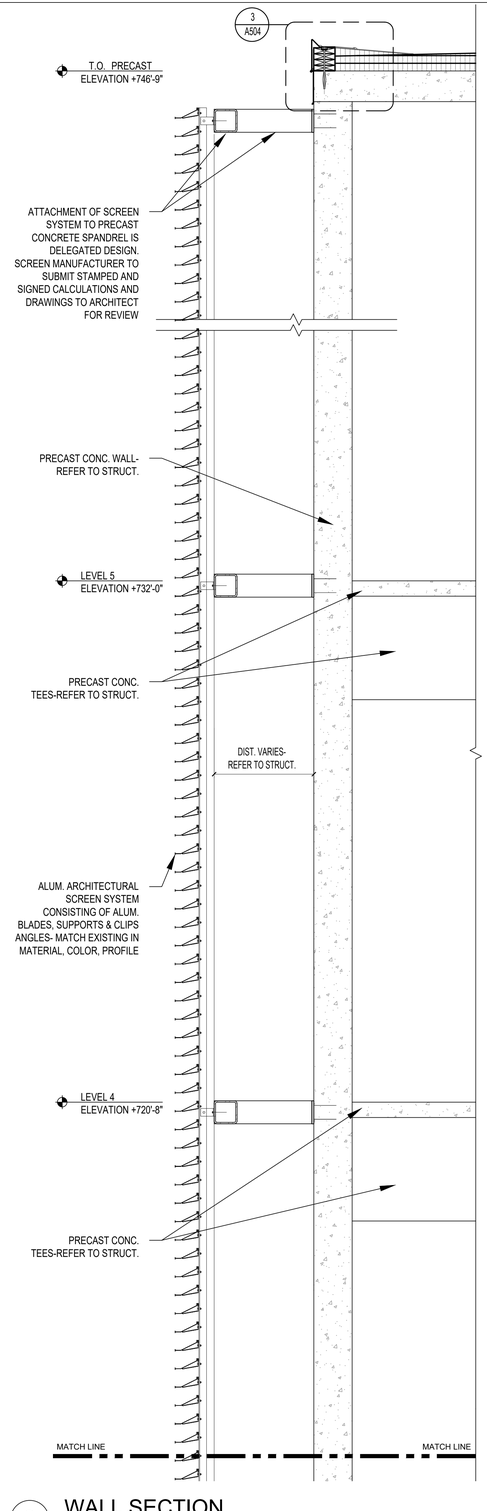

2 WALL SECTION

3/4"=1'-0"

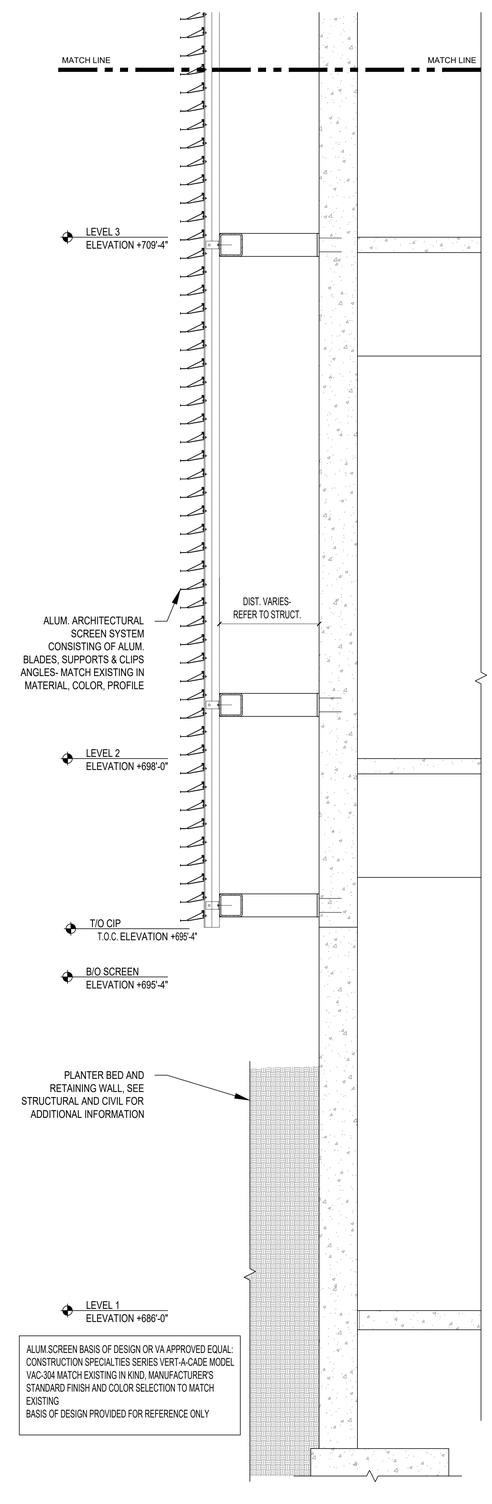

ALUM SCREEN BASIS OF DESIGN OR VA APPROVED EQUAL:
CONSTRUCTION SPECIALTIES SERIES VERT-A-CADE MODEL VAC-304 MATCH EXISTING IN KIND, MANUFACTURER'S STANDARD FINISH AND COLOR SELECTION TO MATCH EXISTING
BASIS OF DESIGN PROVIDED FOR REFERENCE ONLY

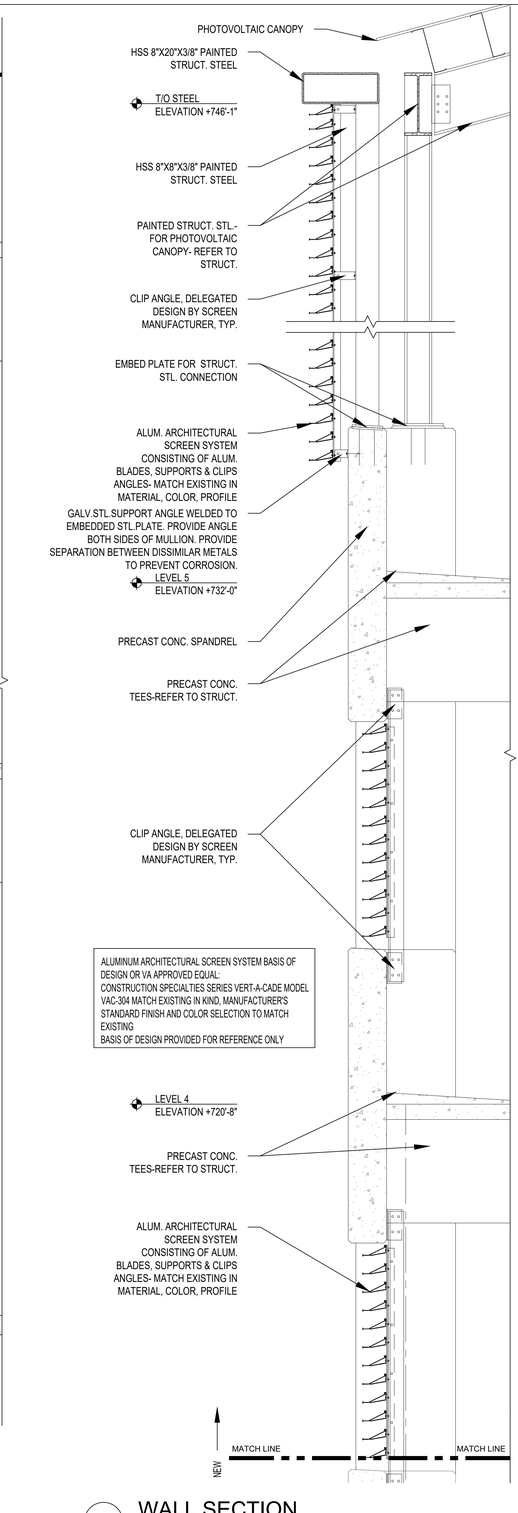

ALUMINUM ARCHITECTURAL SCREEN SYSTEM BASIS OF DESIGN OR VA APPROVED EQUAL:
CONSTRUCTION SPECIALTIES SERIES VERT-A-CADE MODEL VAC-304 MATCH EXISTING IN KIND, MANUFACTURER'S STANDARD FINISH AND COLOR SELECTION TO MATCH EXISTING
BASIS OF DESIGN PROVIDED FOR REFERENCE ONLY

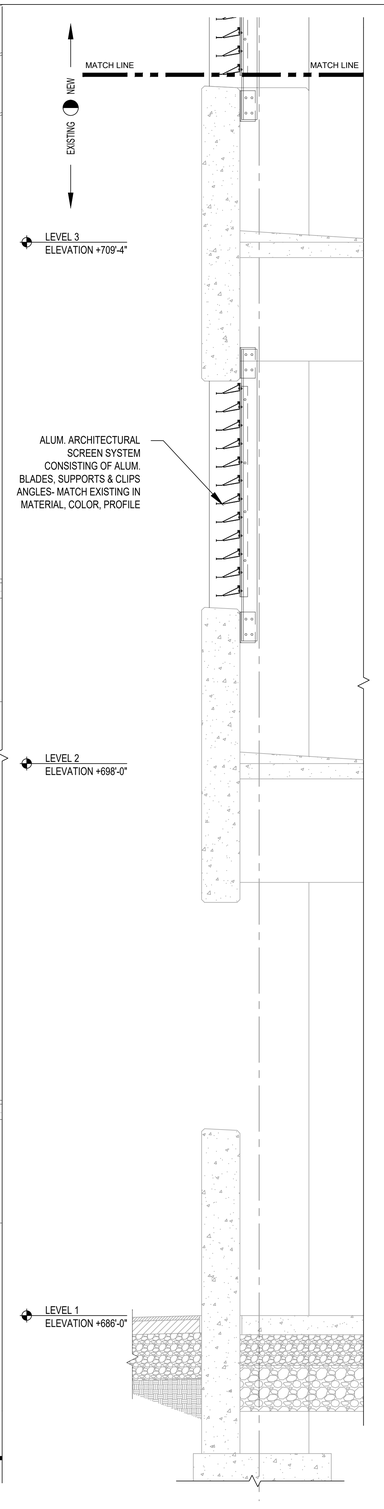

1 WALL SECTION

3/4"=1'-0"

ISSUE FOR BID	**08-09-2024**
Revisions:	**Date:**

CONSULTANT

ARCHITECT/ENGINEER OF RECORD

BANCROFT ARCHITECTS + ENGINEERS
3300 Dundee Rd.
Northbrook, IL 60062
T: 847.952.9362
www. bancroft-ae.com

STAMP

LICENSED ARCHITECT 5-4124 CHINTAN D. CHAVADA ANNUAL RENEWAL 11/30/2025 STATE OF ILLINOIS

Office of Construction and Facilities Management

VA U.S. Department of Veterans Affairs

Drawing Title ARCHITECTURAL- WALL SECTIONS AND DETAILS	**Phase** ISSUE FOR BID	**Project Title** PARKING RAMP EXPANSION	**Project Number** 528-18-375
			Building Number 29
Approved: Project Director		**Location** 3495 BAILEY AVE., BUFFALO, NY 14215	**Drawing Number** A503
		Issue Date 08-09-2024 / **Checked** CZ / **Drawn** II	

K:\CCD_PROJECTS\2021\21-113 - Parking Ramp (Buffalo, NY)\400- Det\Docs\402- Drawings\WORKING\21-113_A503.dwg
6/14/2609 12:39:03 PM

VA FORM 08 - 6231

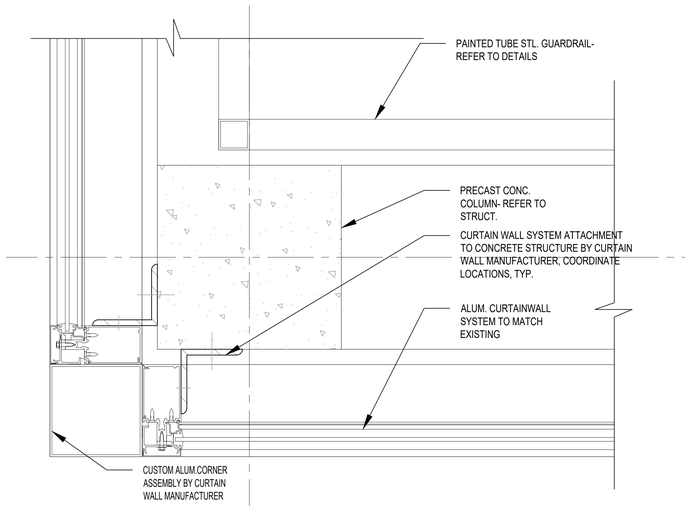

1 DETAIL - OUTSIDE CORNER
3"=1'-0"

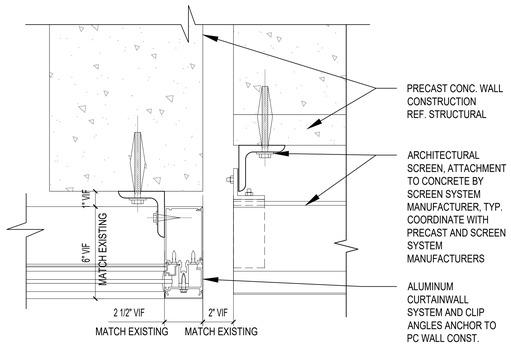

2 DETAIL - JAMB
3"=1'-0"

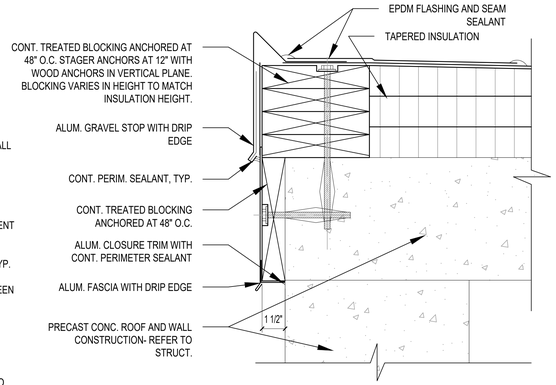

3 DETAIL - ROOF COPING / GRAVEL STOP
3"=1'-0"

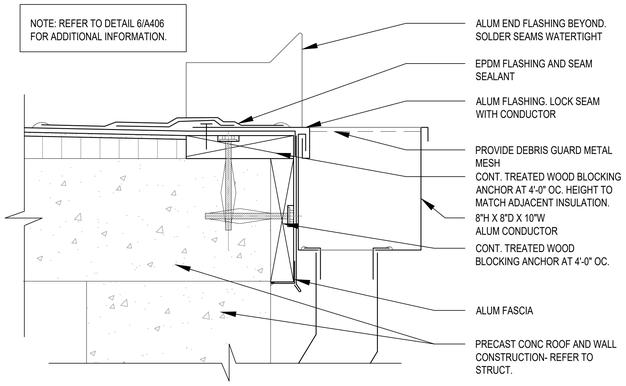

4 DETAIL - SCUPPER
3"=1'-0"

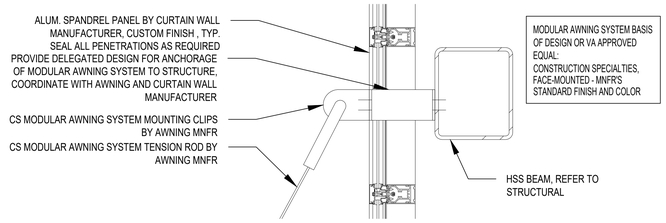

13 MODULAR AWNING SYSTEM DETAIL
1-1/2"=1'-0"

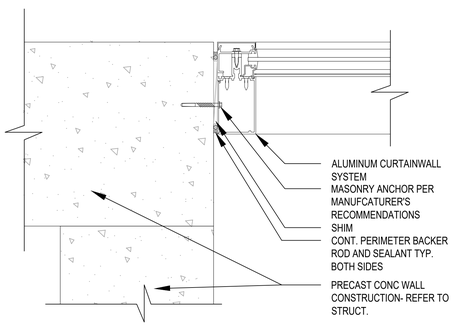

6 DETAIL - JAMB
3"=1'-0"

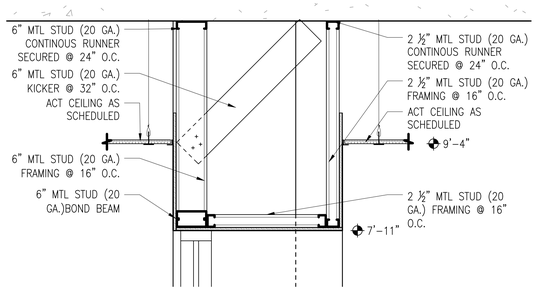

16 SOFFIT & WALL SUPPORT DETAIL
1"=1'-0"

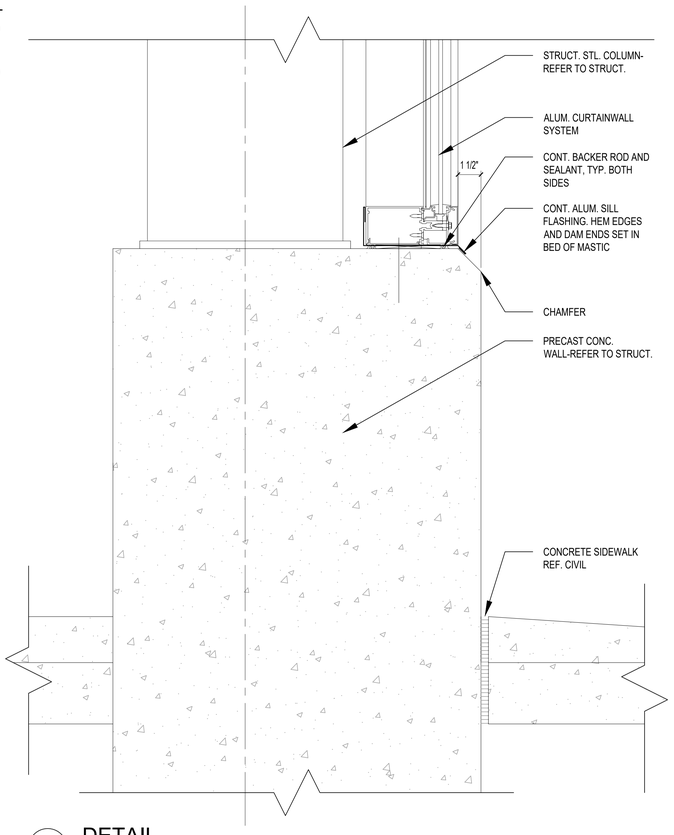

12 DETAIL
3"=1'-0"

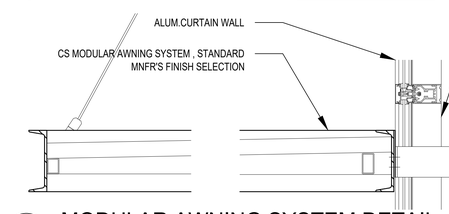

14 MODULAR AWNING SYSTEM DETAIL
1-1/2"=1'-0"

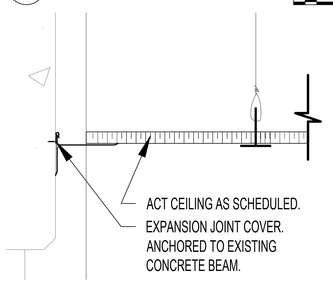

15 EXPANSION JOINT COVER
3"=1'-0"

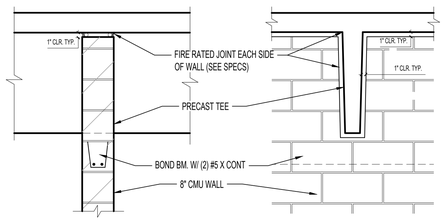

8 WALL/TEE DETAIL
1"=1'-0"

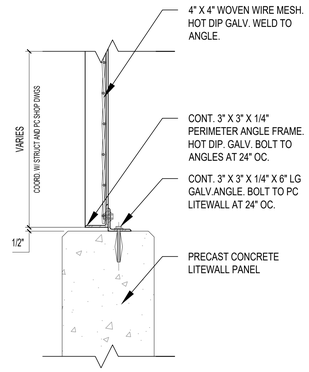

10 MESH PANEL
1-1/2"=1'-0"

NOTE: STRUCTURAL STEEL SIZING, WIRE GAUGE, AND CONNECTIONS ARE APPROXIMATE. DESIGN SHALL MATCH EXISTING PANELS TO REMAIN, VERIFY IN FIELD. FINAL DESIGN OF SCREEN SUPPORT AND ATTACHMENT SHALL BE BY SCREEN MANUFACTURER/CONTRACTOR.

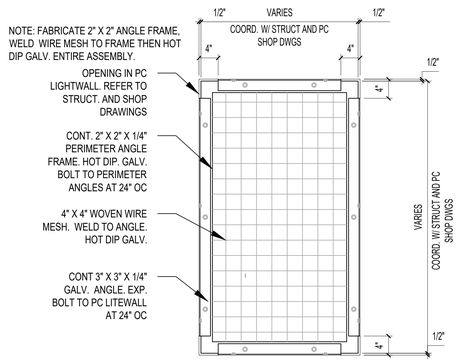

11 MESH PANEL
3/4"=1'-0"

ISSUE FOR BID	08-09-2024
Revisions:	Date:

CONSULTANT

ARCHITECT/ENGINEER OF RECORD

BANCROFT ARCHITECTS + ENGINEERS
3300 Dundee Rd.
Northbrook, IL 60062
T: 847.952.9362
www.bancroft-ae.com

STAMP

Office of Construction and Facilities Management

VA U.S. Department of Veterans Affairs

Drawing Title: ARCHITECTURAL- WALL SECTIONS AND DETAILS	Phase: ISSUE FOR BID	Project Title: PARKING RAMP EXPANSION	Project Number: 528-18-375
			Building Number: 29
Approved: Project Director		Location: 3495 BAILEY AVE., BUFFALO, NY 14215	Drawing Number: A504
		Issue Date: 08-09-2024 / Checked: CZ / Drawn: II	

6/14/2009 12:39:03 PM
K:\CCG_PROJECTS\2021\21-113 - Parking Ramp (Buffalo, NY)\400- DetDocs\402- Drawings\WORKING\21-113_A504.dwg

VA FORM 08 - 6231

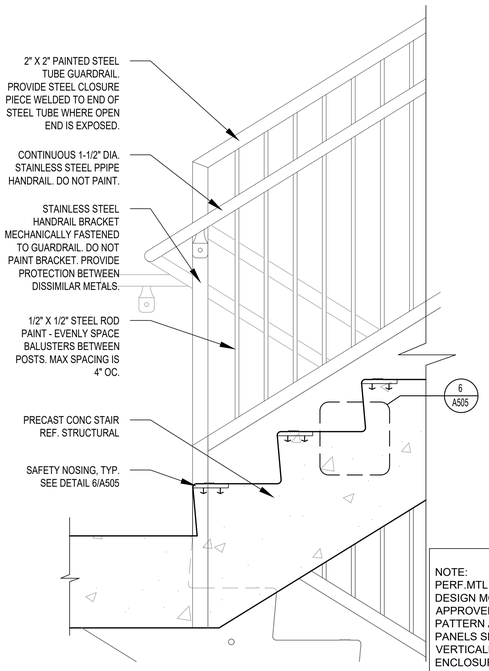

4 INTER. LANDING DETAIL
1–1/2"=1'–0"

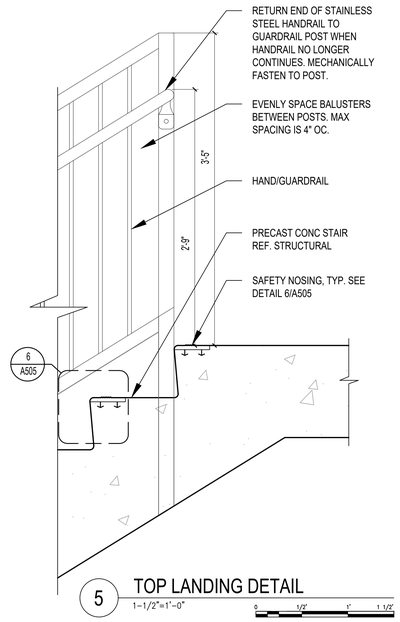

5 TOP LANDING DETAIL
1–1/2"=1'–0"

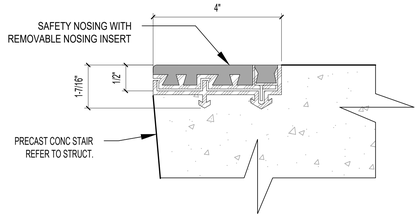

6 NOSING
6"=1'–0"

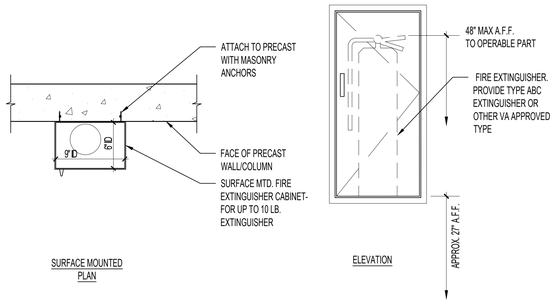

7 FIRE EXTINGUISHER MOUNTING DETAILS
1–1/2"=1'–0"

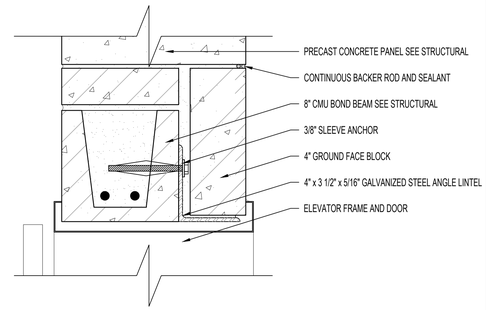

8 ELEVATOR HEAD DETAIL
3"=1'–0"

NOTE:
PERF.MTL PANELS, BASIS OF DESIGN MOZ DESIGNS OR VA APPROVED EQUAL. CUSTOM PATTERN APPROVED BY VA. PANELS SHALL BE STACKED VERTICALLY ALONG THE SAIR ENCLOSURE, TYP.PANEL HEIGHT 5'-8"(VIF)
SEE 10/A505 FOR WIDTH OF PANELS. DIMENSIONS ARE PRELIMINARY AND CONTRACTOR SHALL VERIFY IN FIELD ALL CONDITIONS BEFORE ORDERING. CONTRACTOR TO COMPLY WITH PANEL MANUFACTURER'S INSTALLATION REQUIREMENTS.

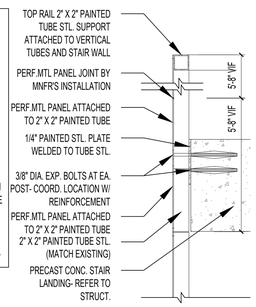

9 TYP.DETAIL-PERF.MTL.PANELS
6"=1'–0"

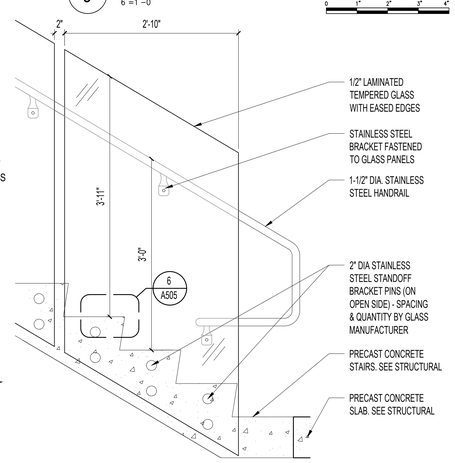

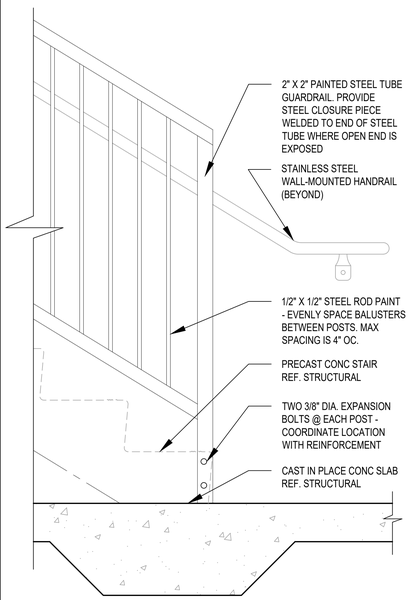

3 BOTTOM LANDING DETAIL
1–1/2"=1'–0"

2 PARTIAL ELEVATION - STAIR RAILING
1"=1'–0"

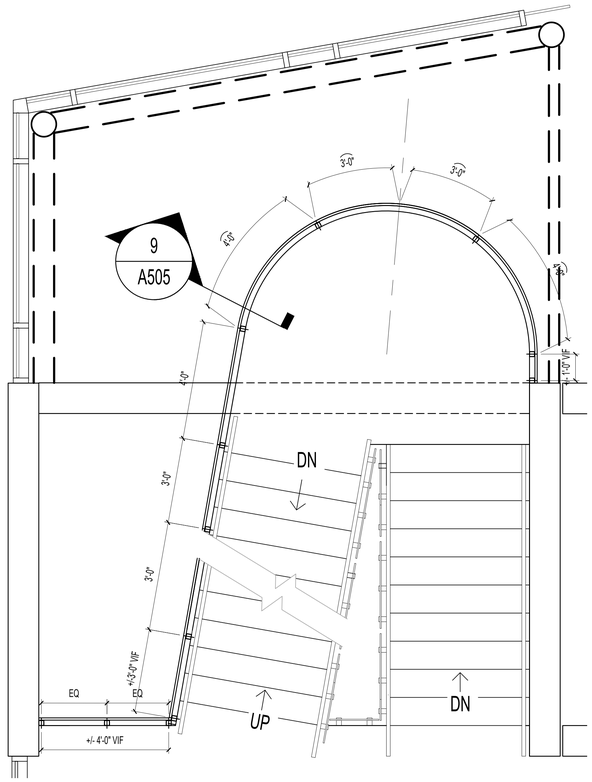

10 PERFORATED METAL PANEL ENCLOSURE
6"=1'–0"

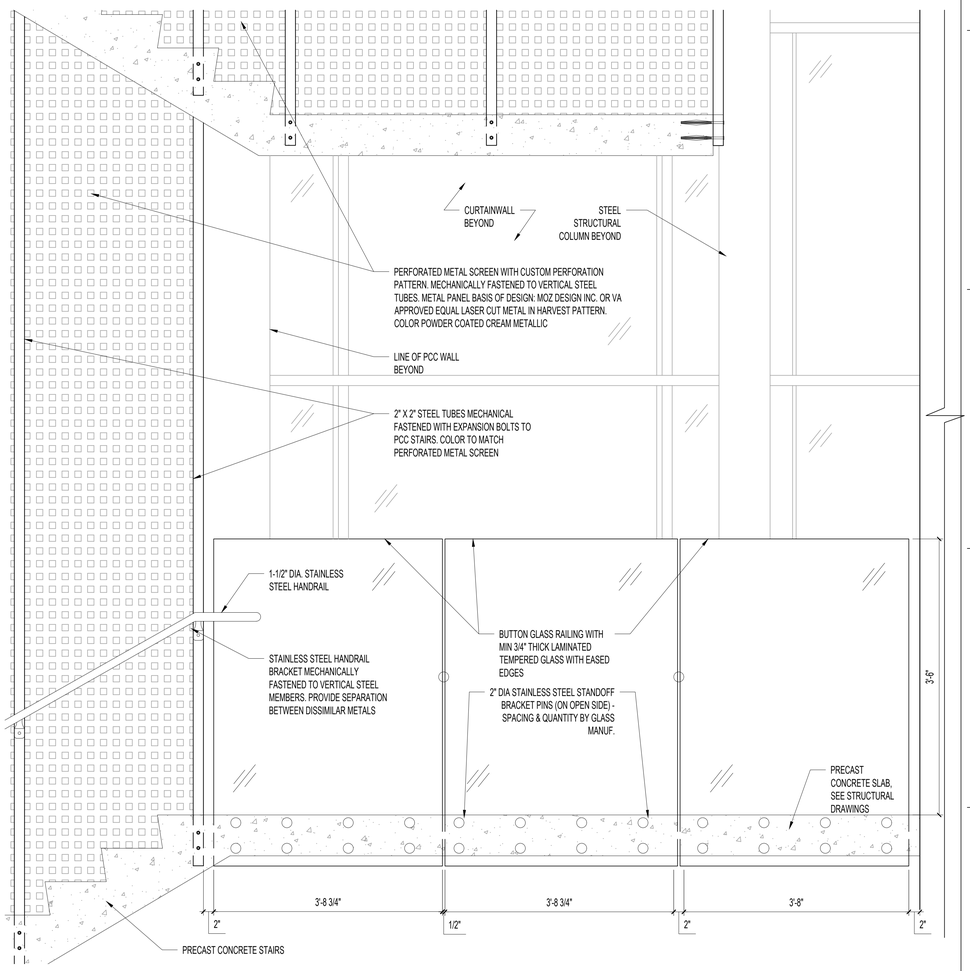

1 PARTIAL ELEVATION - STAIR RAILING
1"=1'–0"

ISSUE FOR BID	08-09-2024
Revisions:	Date:

CONSULTANT

ARCHITECT/ENGINEER OF RECORD

BANCROFT ARCHITECTS + ENGINEERS
3300 Dundee Rd.
Northbrook, IL 60062
T: 847.952.9362
www.bancroft-ae.com

STAMP

Office of Construction and Facilities Management

VA U.S. Department of Veterans Affairs

Drawing Title: ARCHITECTURAL- RAILING AND MISC. DETAILS	Phase: ISSUE FOR BID	Project Title: PARKING RAMP EXPANSION	Project Number: 528-18-375
Approved: Project Director			Building Number: 29
		Location: 3495 BAILEY AVE., BUFFALO, NY 14215	Drawing Number: A505
		Issue Date: 08-09-2024 / Checked: CZ / Drawn: RB	

K:\CCG_PROJECTS\2021\21-113 - Parking Ramp (Buffalo, NY)\400- DetDocs\402- Drawings\WORKING\21-113_A505.dwg
6/14/2009 12:39:03 PM

VA FORM 08 - 6231

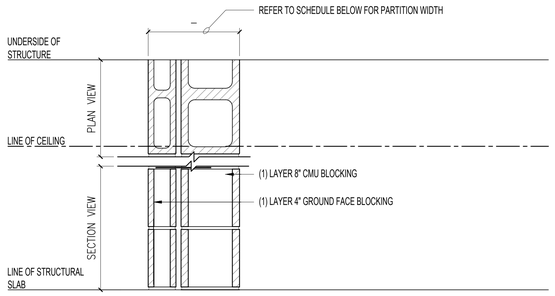

WALL TAG	ASSEMBLY	BLOCK WIDTH	PARTITION WIDTH	FIRE RATING	UL LISTING	REMARKS
A	(1) LAYER 7-5/8" (CMU), (1) LAYER 3-5/8" (FINISH GROUND BLOCK)	7-5/8"	12"	NOT RATED	NOT LISTED	-

A NON-RATED FURRING PARTITIONS

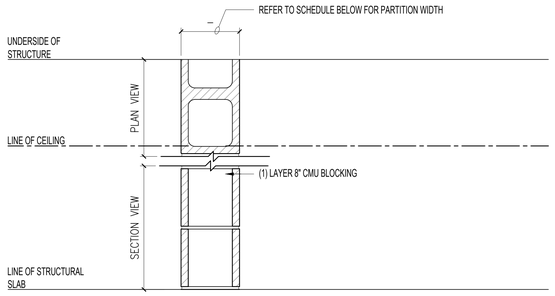

WALL TAG	ASSEMBLY	BLOCK WIDTH	PARTITION WIDTH	FIRE RATING	UL LISTING	REMARKS
B	(1) LAYER 7-5/8" (CMU)	7-5/8"	7-5/8"	NOT RATED	NOT LISTED	-

B NON-RATED FURRING PARTITIONS

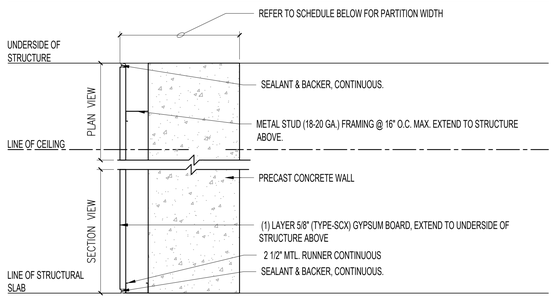

WALL TAG	ASSEMBLY	PRECAST WIDTH	PARTITION WIDTH	FIRE RATING	UL LISTING	REMARKS
C	PRECAST CONCRETE WALL (1) LAYER 5/8" GYP. BRD. ON 2 1/2" MTL. STUDS	12"	15 1/8"	NOT RATED	NOT LISTED	-

C NON-RATED FURRING PARTITIONS

1 PARTITION TYPES
1-1/2"=1'-0"

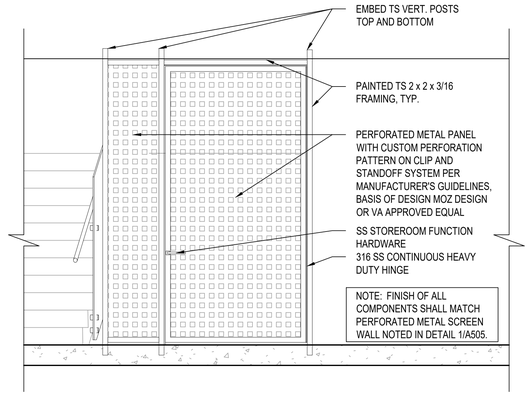

4 ELEVATION - LEVEL 1 RESTRICTED ACCESS GATE
1/2"=1'-0"

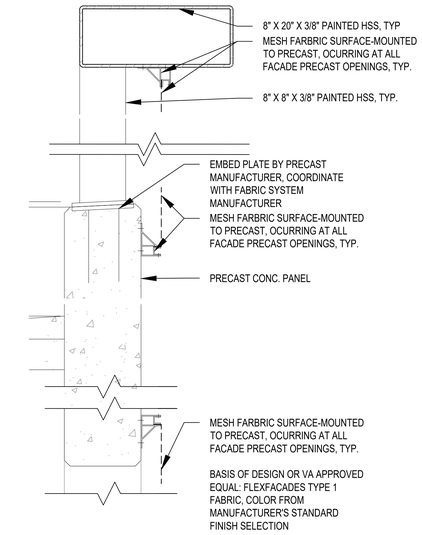

5 DEDUCT ALTERNATE #6 - RAILING DETAIL
1/2"=1'-0"

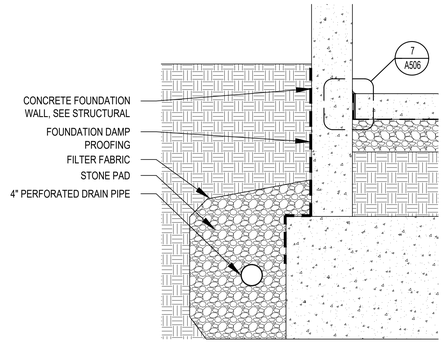

6 DETAIL FOOTING
1"=1'-0"

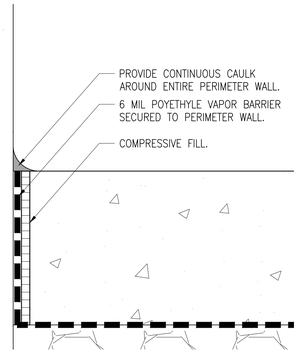

7 SELEANT AT SLAB
6"=1'-0"

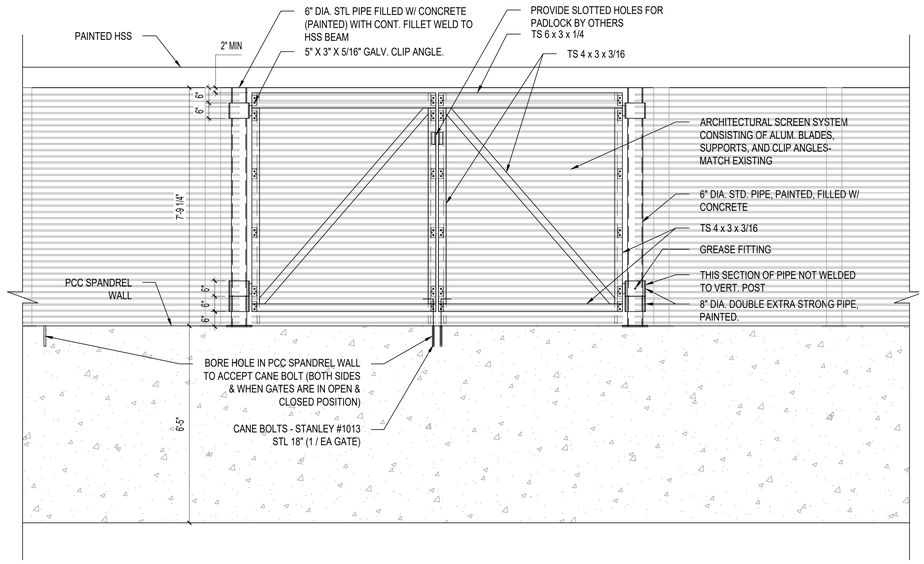

2 ELEVATION - LEVEL 5 SNOW GATE
1/2"=1'-0"

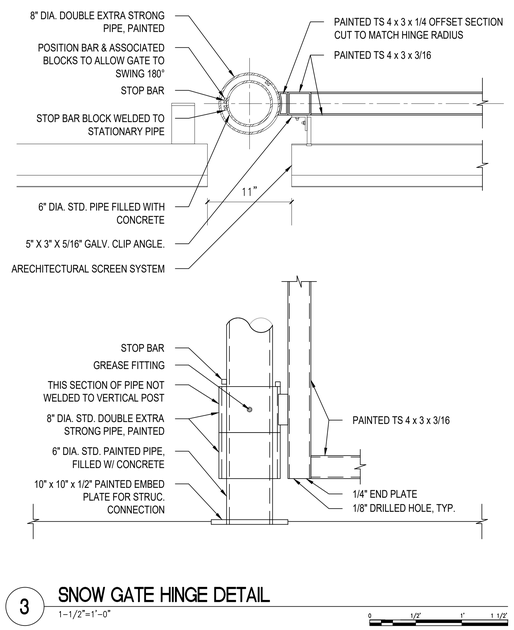

3 SNOW GATE HINGE DETAIL
1-1/2"=1'-0"

ISSUE FOR BID	08-09-2024
Revisions:	Date:

CONSULTANT

ARCHITECT/ENGINEER OF RECORD

BANCROFT ARCHITECTS + ENGINEERS
3300 Dundee Rd.
Northbrook, IL 60062
T: 847.952.9362
www. bancroft-ae.com

STAMP

LICENSED ARCHITECT 5412A CHETAN D. DAVALIA 10/31/2025 STATE OF ILLINOIS

Office of Construction and Facilities Management

VA U.S. Department of Veterans Affairs

Drawing Title: ARCHITECTURAL- PARTITION TYPES AND MISCELLANEOUS DETAILS	Phase: ISSUE FOR BID	Project Title: PARKING RAMP EXPANSION	Project Number: 528-18-375
			Building Number: 29
Approved: Project Director		Location: 3495 BAILEY AVE., BUFFALO, NY 14215	Drawing Number: A506
		Issue Date: 08-09-2024 / Checked: CZ / Drawn: RB	

6/14/2009 12:39:03 PM
K:\CCD_PROJECTS\2021\21-113 - Parking Ramp (Buffalo, NY)\400- Dwg\Dwgs\WORKING\21-113_A506.dwg

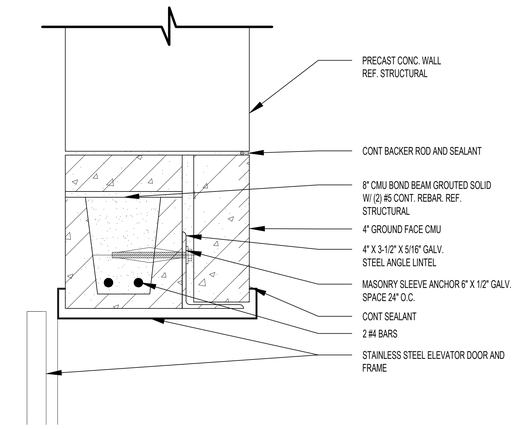

1 ELEVATOR DETAIL - HEAD

3"=1'-0"

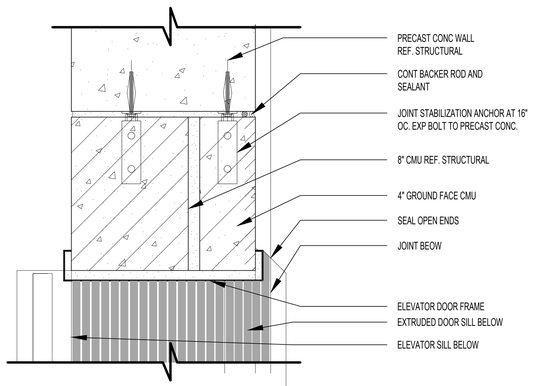

2 ELEVATOR DETAIL - JAMB

3"=1'-0"

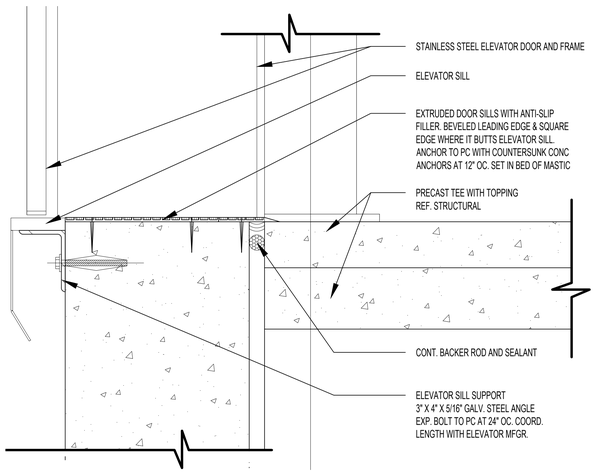

3 ELEVATOR DETAIL - SILL

3"=1'-0"

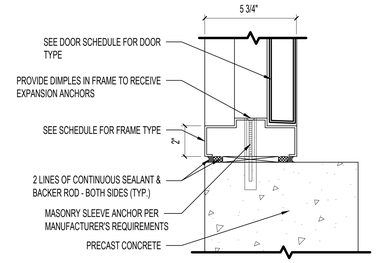

4 HEAD / JAMB

3"=1'-0"

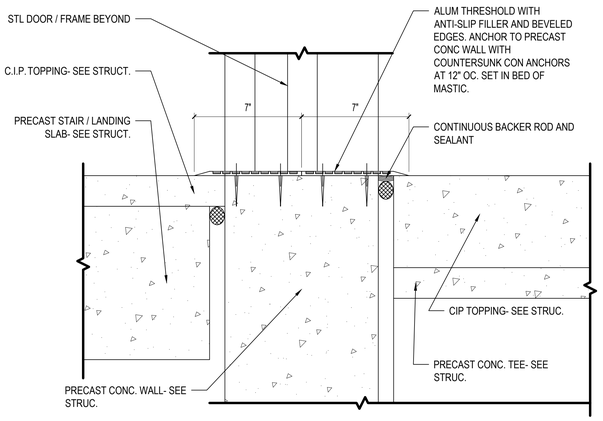

5 THRESHOLD

3"=1'-0"

DOOR SCHEDULE

DOOR NO.	ROOM LOCATION	ROOM NO.	LEAF					FRAME					FIRE RATING	Hardware Set No.	GLASS	REMARKS
			Width	Height	THK	MATL	ELEV.	MATL	ELEV.	HEAD DET.	JAMB DET.	SILL DET.				
101	LEVEL 1 LOBBY	101	3'-6"	7'-9"	1-3/4"	ALUM.	C	ALUM	1	4/A601	4/A601	5/A601	-	E4	TG	NOTE 6.
102	EXISTING STAIR TOWER 2	102	E.T.R	E.T.R.	E.T.R.	E.T.R.	-	E.T.R.	E.T.R.	E.T.R.	E.T.R.	E.T.R.	-	-	-	EXISTING TO REMAIN
103	EXISTING STAIR TOWER 3	103	MATCH EXIST	MATCH EXST	MATCH EXST	STL.	A	E.T.R.	E.T.R.	E.T.R.	E.T.R.	E.T.R.	-	5G	-	NOTE 1, 3, 5.
104	ELECTRICAL ROOM	104	3'-0"	7'-0"	1-3/4"	STL.	A	STL.	1	4/A601	4/A601	5/A601	-	E3	-	NOTE 4, 5.
M01-A	MEDICAL CENTER LOBBY	M01	6'-0"	7'-0"	1-3/4"	ALUM.	C	ALUM	2				-	8E	TG	NOTE 6.
M01-B	MEDICAL CENTER LOBBY	M01	6'-0"	7'-0"	1-3/4"	ALUM.	C	ALUM	2				-	8E	TG	NOTE 6.
201	LEVEL 2 LOBBY	201	3'-6"	7'-9"	1-3/4"	ALUM.	C	ALUM	1	4/A601	4/A601	5/A601	-	E4	TG	NOTE 6.
202	EXISTING STAIR TOWER 2	202	E.T.R	E.T.R.	E.T.R.	E.T.R.	-	E.T.R.	E.T.R.	E.T.R.	E.T.R.	E.T.R.	-	-	-	EXISTING TO REMAIN
203A	EXISTING STAIR TOWER 3	203A	MATCH EXIST	MATCH EXST	MATCH EXST	STL.	A	E.T.R.	E.T.R.	E.T.R.	E.T.R.	E.T.R.	-	5G	-	NOTE 1, 3, 5.
203B	EXISTING STAIR TOWER 3	203B	3'-0"	7'-0"	1-3/4"	STL.	A	STL.	1	4/A601	4/A601	5/A601	-	E3	-	NOTE 4.
301	LEVEL 3 LOBBY	301	3'-6"	7'-9"	1-3/4"	ALUM.	C	ALUM	1	4/A601	4/A601	5/A601	-	E4	TG	NOTE 6.
302	EXISTING STAIR TOWER 2	302	E.T.R	E.T.R.	E.T.R.	E.T.R.	-	E.T.R.	E.T.R.	E.T.R.	E.T.R.	E.T.R.	-	-	-	EXISTING TO REMAIN
303	EXISTING STAIR TOWER 3	303	MATCH EXIST	MATCH EXST	MATCH EXST	STL.	A	E.T.R.	E.T.R.	E.T.R.	E.T.R.	E.T.R.	-	5G	-	NOTE 1, 3, 5.
401	LEVEL 4 LOBBY	401	3'-6"	7'-9"	1-3/4"	ALUM.	C	ALUM	1	4/A601	4/A601	5/A601	-	E4	TG	NOTE 6.
402	STAIR TOWER 2	402	3'-0"	7'-0"	1-3/4"	STL.	B	STL.	1	4/A601	4/A601	5/A601	-	-	TG	NOTE 2.
501	LEVEL 5 LOBBY	501	3'-6"	7'-9"	1-3/4"	ALUM.	C	ALUM	1	4/A601	4/A601	5/A601	-	E4	TG	NOTE 6.
502	STAIR TOWER 2	502	3'-0"	7'-0"	1-3/4"	STL.	B	STL.	1	4/A601	4/A601	5/A601	-	-	TG	NOTE 2.

GENERAL NOTES:

A. CONTRACTOR SHALL REVIEW HARDWARE SETS WITH OWNER PRIOR TO ORDERING.
B. SEE SPECIFICATIONS (DIVISION 08 OPENINGS) FOR DOORS AND FRAMES.
C. SEE SPECIFICATION SECTION 08 71 00 FOR HARDWARE SETS.
D. SEE SPECIFICATION SECTION 08 80 00 FOR GLAZING TYPES.
E. NON-RATED DOORS SHALL HAVE HOSPITAL STOPS.
F. OPENING DIMENSIONS OF EXISTING FRAMES TO REMAIN SHALL BE FIELD VERIFIED.
G. COAT HOOKS SHALL BE MOUNTED AT 48" A.F.F.
H. WOOD DOORS ARE SOLID CORE. COLOR: MATCH BUILDING STANDARD.
I. EXISTING HOLLOW METAL FRAMES TO REMAIN SHALL BE PAINTED.

NOTES:

1) FIELD VERIFY OPEN'G IN FIELD. COORDINATE W/ DR. MFR.
2) DOOR, FRAME, & HARDWARE TO MATCH EXISTING FLOORS IN "STAIR 2".
3) EXISTING FRAME TO REMAIN. REPLACE EXISTING DOOR SLAB AND HARDWARE PER SCHEDULE. IF FRAME IS DAMAGED AND UNABLE TO ACCEPT NEW LEAF, REPLACE FRAME IN KIND.
4) DOOR, FRAME, AND HARDWARE TO MATCH ADJACENT UTILITY & MAINTENANCE ROOM DOORS.
5) PROVIDE "RESTRICTED ACCESS" OR "VA STAFF ONLY" SIGNAGE.
6) PROVIDE AND INSTALL OPENER AND ASSOCIATED "NO TOUCH" SENSOR AS PER ARCHITECTURAL DRAWINGS SEE 400 SERIES.

LEGEND:

HM: HOLLOW METAL
WD: WOOD
E.T.R: EXISTING TO REMAIN
ALUM: ALUMINUM
STL: STEEL
TG: TEMPERED GLASS
IG: INSULATED GLASS
LG: LAMINATED GLASS
MG: MONOLITHIC GLASS
SG: SECURITY GLASS

ROOM FINISH LEGEND

Key	Material	Manufacturer/Basis of Design or VA Approved Equal	Product Properties	Style/Color	Contact
FLOORING					
CS-1	SEALED CONCRETE	SHERWIN WILLIAMS	SEALANT FOR CONCRETE	CLEAR/MATT FINISH	
WALL FINISH					
P-1	PAINT (STAIR / ELEVATOR SHAFTWAYS)	BENJAMIN MOORE	ECO SPEC -	MATTE FINISH/COLOR PREVIEW/COLOR: SHAKER BEIGE HC-45	Mary Hoffman 815-919-0209
CEILING					
P-1	PAINT (STAIR / ELEVATOR SHAFTWAYS)	BENJAMIN MOORE	ECO SPEC -	MATTE FINISH/COLOR PREVIEW/COLOR: SHAKER BEIGE HC-45	Mary Hoffman 815-919-0209
ACT	ACOUSTIC CEILING TILE	ARMSTRONG	MINERAL FIBER	CORTEGA #770 /24"X24"X5/8"/ SQUARE EDGE/ 1-1/2" GRID/ COLOR - WHITE	TABITHA MCCARTHY 312-282-0759
MISCELLANIOUS FINISHES					
WM-1	WIRE MESH PANELS		TO MATCH EXISTING	TO MATCH EXISTING	
PM-1	PERFORATED METAL PANELS	MOZ DESIGNS	MOZ HAT CHANNEL SYSTEM FOR WALL AND CEILINGS	HARVEST PATTERN / BLACK MATTE	
AW-1	ALUMINUM AWNING	CONSTRUCTION SPECIALTIES	MODULAR AWNING SYSTEM	FACE MOUNTED, ALUMINUM. COORDINATE ALL FINISHES WITH VA	
	INTERIOR SIGNAGE	CREATIVE SIGNAGE SYSTEMS INC	VA STANDARDS/STATION STANDARDS		

FINAL APPROVAL FOR ALL FINISHES BY BUFFALO VA INTERIOR DESIGNER.
USE LISTED MANUFACTURER/DESIGN BASIS AS STATION'S STANDARD TO BE MATCHED IF THERE IS NO LABEL "OR VA APPROVED EQUAL".
CHECK WITH VA/COR/INTERIOR DESIGNER ON USE OF WP-1. STATION STANDARD REQUIRES NO WALL COVERING UNLESS APPROVED IN WRITING.

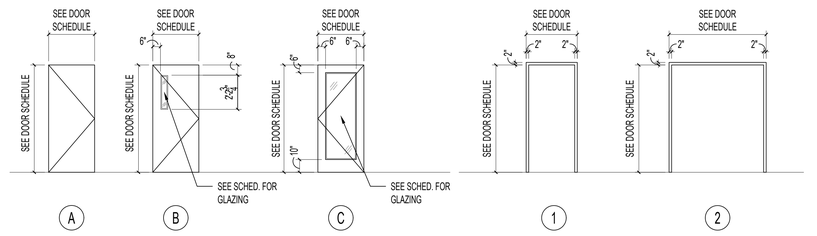

DOOR TYPES

FRAME TYPES

ROOM FINISH SCHEDULE

Room No.	Room Name	Floor		Base		Walls												CEILING		Remarks
						North			West			South			East					
		Material	Finish	Material	Color	Material	Finish	Color	Material	Finish	Color	Material	Finish	Color	Material	Finish	Color	Type	Height	
001	LOWER LOBBY	CS	CS-1	-	-	CONC	-	-	CONC	-	-	CONC	-	-	CONC	-	-	EXP	-	-
101	LEVEL 1 LOBBY	CS	CS-1	-	-	CONC	-	-	CONC	-	-	CONC	PAINT	-	CONC	-	-	ACT	9'-4"	1
M01	MEDICAL CENTER LOBBY	CS	CS-1	-	-	GL	-	-	GL	-	-	CONC	-	-	GL	-	-	EXP	-	-
201	LEVEL 2 LOBBY	CS	CS-1	-	-	CONC	-	-	CONC	-	-	CONC	PAINT	-	CONC	-	-	EXP	-	1
301	LEVEL 3 LOBBY	CS	CS-1	-	-	CONC	-	-	CONC	--	-	CONC	PAINT	-	CONC	-	-	EXP	-	1
401	LEVEL 4 LOBBY	CS	CS-1	-	-	CONC	-	-	CONC	-	-	CONC	PAINT	-	CONC	-	-	EXP	-	1
402	STAIR 2	CS	CS-1	-	-	CONC	-	--	GL	-	-	GL	-	-	CONC	-	-	EXP	-	-
501	LEVEL 5 LOBBY	CS	CS-1	-	-	CONC	-	-	CONC	-	-	CONC	PAINT	-	CONC	-	-	EXP	-	1
502	STAIR 2	CS	CS-1	-	-	CONC	-	-	GL	-	-	GL	-	-	CONC	-	-	EXP	-	-

ABBREVIATIONS:

P:	Paint	EXP:	Exposed
CS:	Concrete, Sealed	GL:	Glazing, Courtainwall
CONC:	Concrete, Unfinished	ACT:	Acoustic Ceiling Tile

GENERAL FINISH NOTES:

1. DO NOT PAINT: STAINLESS STEEL DOORS AND FRAMES, STAINLESS STEEL HANDRAILS, ALUMINUM CURTAINWALL CONSTRUCTION, PREFINISHED EQUIPMENT/CONSTRUCTION.

REMARKS:

1. REFER TO WAYFINDING SHEETS (AW SERIES) FOR COLOR AND EXTENTS OF PAINTED WALLS

ISSUE FOR BID	**08-09-2024**
Revisions:	**Date:**

CONSULTANT

ARCHITECT/ENGINEER OF RECORD

BANCROFT ARCHITECTS + ENGINEERS
3300 Dundee Rd.
Northbrook, IL 60062
T: 847.952.9362
www. bancroft-ae.com

STAMP

Office of Construction and Facilities Management

VA U.S. Department of Veterans Affairs

Drawing Title ARCHITECTURAL- DOOR SCHEDULE AND DETAILS AND FINISH SCHEDULE	**Phase** ISSUE FOR BID	**Project Title** PARKING RAMP EXPANSION	**Project Number** 528-18-375
			Building Number 29
Approved: Project Director		**Location** 3495 BAILEY AVE., BUFFALO, NY 14215	**Drawing Number** A601
		Issue Date 08-09-2024 / **Checked** CZ / **Drawn** RB	

K:\CCG_PROJECTS\2021\21-113 - Parking Ramp (Buffalo, NY)\400- DesDocs\402- Drawings\WORKING\21-113_A601.dwg
6/14/2009 12:39:03 PM
21-113_A601.dwg
1/15/2004
VA FORM 08 - 6231

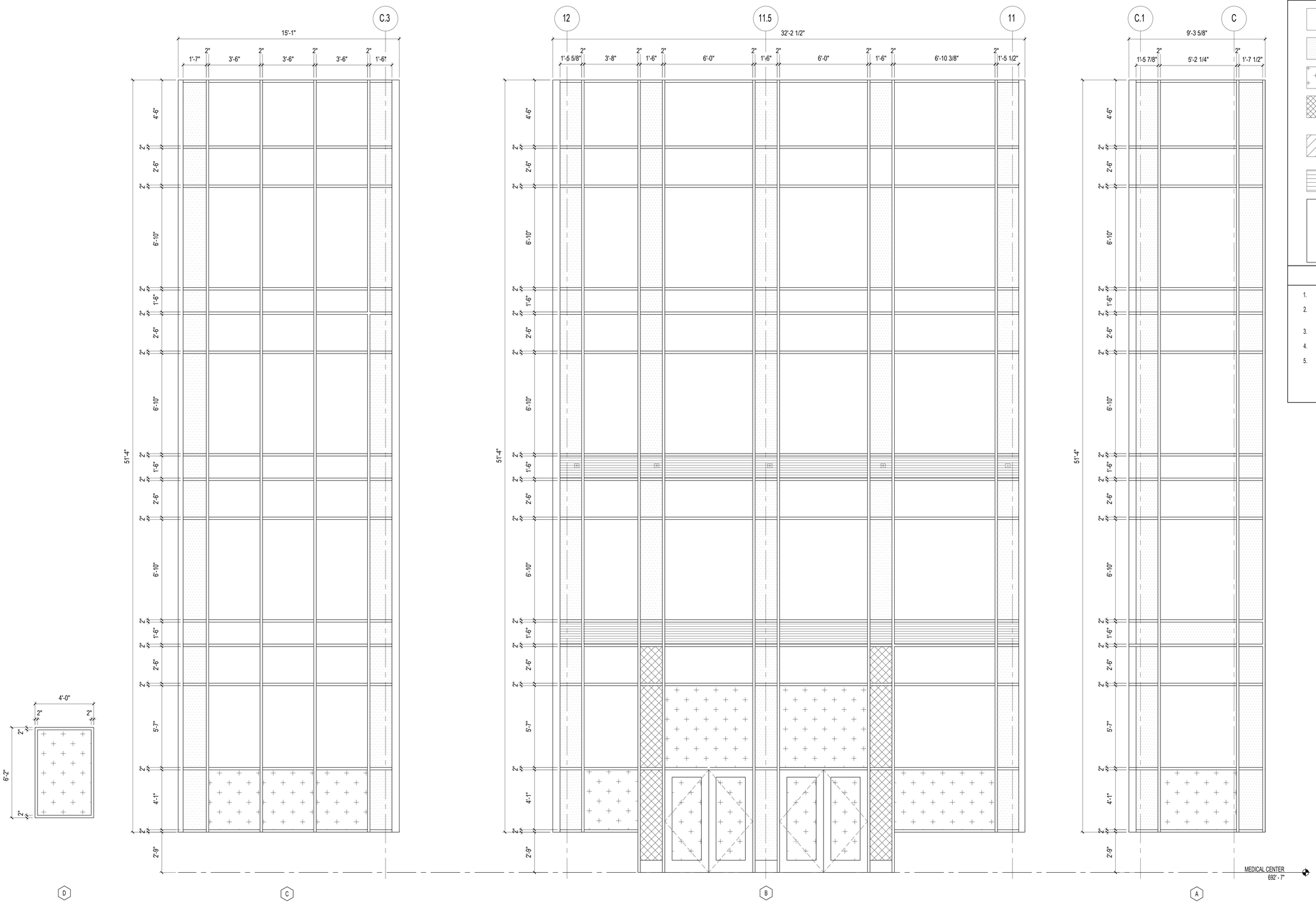

1 GLAZING ELEVATIONS
3/8"=1'-0"

GLAZING LEGEND

- IGU1 - 1" INSULATED GLASS
- IGU2 - 1" SPANDREL GLASS
- IGU3 - 1" INSULATED GLASS WITH TEMPERED GLAZING FOR BOTH INSIDE AND OUTSIDE LITES
- IGU4 - 1" INSULATED METAL PANEL WITH CUSTOM COLOR KYNAR FINISH BOTH SIDES. COLOR TO BE COORDINATED WITH WAYFINDING SIGNAGE LEVEL M AND CONFIRMED WITH VA. BASIS OF DESIGN: MAPES-R INFILL PANEL WITH POLYSTYRENE CORE.
- MG-1 - MONOLITHIC GLAZING TO MATCH EXISTING
- IGU2A - 1" SPANDREL GLASS, METAL MOCK PANEL TO ACCOMMODATE MODULAR AWNING SYSTEM

CURTAIN WALL BASIS OF DESIGN OR VA APPROVED EQUAL
KAWNEER 1600 WALL SYSTEM 1
SIGHTLINE 2 1/2"
STANDARD 6" DEPTH
NOTE: CONTRACTOR SHALL MATCH THE EXISTING CURTAIN WALL SYSTEM IN KIND, BASIS OF DESIGN PROVIDED HERE IS FOR REFERENCE ONLY

NOTES

1. NEW CURTAINWALL GLAZING SYSTEM TO MATCH EXISTING IN PROFILE, COLOR AND MATERIAL.
2. NEW CURTAINWALL FRAMING TO ALIGN WITH EXISTING FRAMING BELOW. REPLACE EXISTING ALUM. FRAMING AS NEEDED DUE TO DAMAGE DURING DEMO/CONSTRUCTION.
3. PAINTED METAL SIGNAGE MOUNTED TO GLAZING FRAMING. REFER TO BID DEDUCT ALTERNATES FOR ADDITIONAL INFORMATION.
4. REFER TO SPECIFICATION SECTION 08 80 00 FOR GLAZING TYPE AND INSTALLATION INFORMATION.
5. COORDINATE CS MODULAR AWNING SYSTEM CONNECTION POINTS WITH CURTAIN WALL SYSTEM AND BUILDING STRUCTURE.

ISSUE FOR BID	08-09-2024
Revisions:	Date:

CONSULTANT

ARCHITECT/ENGINEER OF RECORD

BANCROFT ARCHITECTS + ENGINEERS
3300 Dundee Rd.
Northbrook, IL 60062
T: 847.952.9362
www. bancroft-ae.com

STAMP

LICENSED ARCHITECT
CROTAN D. ZAKARIA
STATE OF ILLINOIS

Office of Construction and Facilities Management

VA U.S. Department of Veterans Affairs

Drawing Title: ARCHITECTURAL- GLAZING ELEVATIONS

Approved: Project Director

Phase: ISSUE FOR BID

Project Title: PARKING RAMP EXPANSION

Location: 3495 BAILEY AVE., BUFFALO, NY 14215

Issue Date: 08-09-2024 | Checked: CZ | Drawn: II

Project Number: 528-18-375

Building Number: 29

Drawing Number: A611

VA FORM 08 - 6231

K:\CCG_PROJECTS\2021\21-113 - Parking Ramp (Buffalo, NY)\400- DesDocs\402- Drawings\WORKING\21-113_A611.dwg
6/14/2009 12:39:03 PM

GLAZING LEGEND

- IGU1 - 1" INSULATED GLASS
- IGU2 - 1" SPANDREL GLASS
- IGU3 - 1" INSULATED GLASS WITH TEMPERED GLAZING FOR BOTH INSIDE AND OUTSIDE LITES
- IGU4 - 1" INSULATED METAL PANEL WITH CUSTOM COLOR KYNAR FINISH BOTH SIDES. COLOR TO BE COORDINATED WITH WAYFINDING SIGNAGE LEVEL M AND CONFIRMED WITH VA. BASIS OF DESIGN: MAPES-R INFILL PANEL WITH POLYSTYRENE CORE.
- MG-1 - MONOLITHIC GLAZING TO MATCH EXISTING

NOTES

1. NEW CURTAINWALL GLAZING SYSTEM TO MATCH EXISTING IN PROFILE, COLOR AND MATERIAL.
2. NEW CURTAINWALL FRAMING TO ALIGN WITH EXISTING FRAMING BELOW. REPLACE EXISTING ALUM. FRAMING AS NEEDED DUE TO DAMAGE DURING DEMO/CONSTRUCTION.
3. PAINTED METAL SIGNAGE MOUNTED TO GLAZING FRAMING. REFER TO BID DEDUCT ALTERNATES FOR ADDITIONAL INFORMATION.
4. REFER TO SPECIFICATION SECTION 08 80 00 FOR GLAZING TYPE AND INSTALLATION INFORMATION.

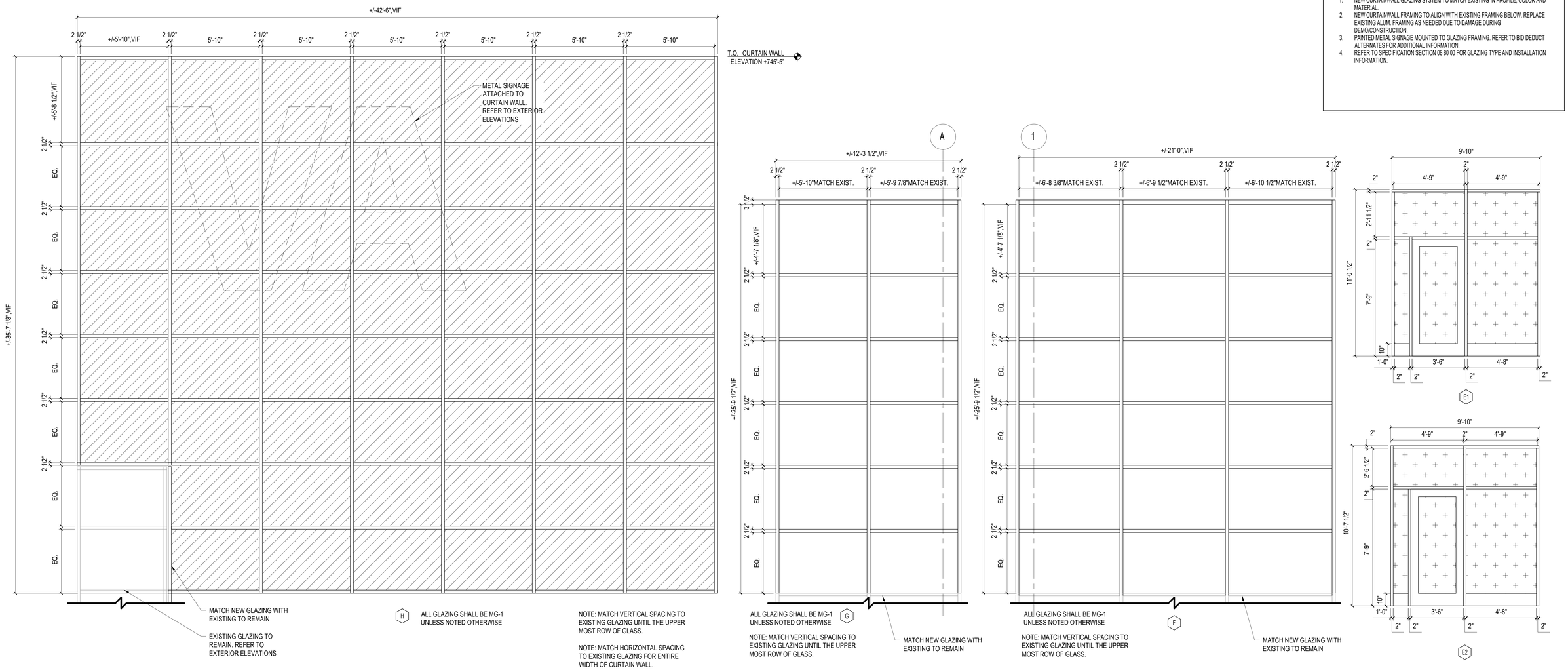

2 GLAZING ELEVATIONS

3/8"=1'-0"

ISSUE FOR BID	08-09-2024
Revisions:	Date:

CONSULTANT

ARCHITECT/ENGINEER OF RECORD

BANCROFT ARCHITECTS + ENGINEERS
3300 Dundee Rd.
Northbrook, IL 60062
T: 847.952.9362
www.bancroft-ae.com

STAMP

LICENSED ARCHITECT
CROTAN D. ZAKARIA
06/14/2024
STATE OF ILLINOIS

Office of Construction and Facilities Management

VA U.S. Department of Veterans Affairs

Drawing Title	Phase	Project Title	Project Number
ARCHITECTURAL- GLAZING ELEVATIONS	ISSUE FOR BID	PARKING RAMP EXPANSION	528-18-375
Approved: Project Director		Location: 3495 BAILEY AVE., BUFFALO, NY 14215	Building Number: 29
		Issue Date: 08-09-2024 / Checked: CZ / Drawn: II	Drawing Number: A612

K:\CCG_PROJECTS\2021\21-113 - Parking Ramp (Buffalo, NY)\400- DesDocs\402- Drawings\WORKING\21-113_A612.dwg

6/14/2009 12:39:03 PM

VA FORM 08 - 6231

WAYFINDING PLAN LEGEND

SIGN MARK (SEE SIGN SCHEDULE) — S10

FACE OF SIGN

NEW SIGN — S10

EXISTING TO REMAIN SIGN — S10

PAINTED TRAFFIC COATING

VINYL WALL GRAPHIC

LEVEL ASSIGNED COLORS AND GRAPHICS (CMYK)

LEVEL 5:	C4 M67 Y66 K0 (ARANCLATA ORANGE)	SUN
LEVEL 4:	C61 M78 Y20 K4 (PURPLE PRINT)	CLOUDS
LEVEL 3:	MATCH EXISTING (YELLOW)	RAIN
LEVEL 2:	MATCH EXISTING (RED)	FLOWERS
LEVEL M:	C95 M76 Y0 K0 (SAILBOAT BLUE)	BUILDING
LEVEL 1:	MATCH EXISTING (GREEN)	TREES
LEVEL 0:	C36 M60 W71 K21 (MODENA MUD)	ROCKS

NOTE: EXACT WALL GRAPHIC LOGO SHALL BE SUBMITTED TO AND APPROVED BY ARCHITECT OF RECORD AND VA COR PRIOR TO FABRICATION AND INSTALLATION.

WAYFINDING PLAN NOTES

A. SEE SHEETS AW601 & AW602 FOR SIGN SCHEDULE & GRAPHICS DETAILS.

B. REVIEW THIS DRAWING IN CONJUNCTION WITH CORRESPONDING CIVIL AND STRUCTURAL DRAWINGS.

(X) WAYFINDING KEYNOTES

1. 12 INCH WIDE PAINTED STRIPE ON PARKING DECK. STRIPE COLOR TO MATCH ASSOCIATED LEVEL COLOR SCHEME. REFER TO DETAIL 1/AW605.DEDUCT ALTERNATE #2: REMOVE FROM SCOPE OF WORK..
2. PAINTED DIRECTIONAL CHEVRON ON PARKING DECK. REFER TO DETAIL 1/AW605. DEDUCT ALTERNATE #2: REMOVE FROM SCOPE OF WORK.
3. PAINTED DIRECTIONAL LETTERING ON PARKING DECK. REFER TO DETAIL 1/AW605. DEDUCT ALTERNATE #2: REMOVE FROM SCOPE OF WORK.
4. PAINTED PEDESTRIAN CROSSWALK MATCHING ASSOCIATED LEVEL COLOR SCHEME. REFER TO DETAIL 2/AW605. DEDUCT ALTERNATE #2: REMOVE FROM SCOPE OF WORK.
5. VINYL GRAPHIC ON BOTH SIDES OF GLASS. REFER TO DETAIL 4/AW101.
6. FLOOR COATING TO ALIGN WITH EDGE OF WINDOW OPENING. APPLY PAINT ON WALL TO MATCH FLOOR COATING COLOR. REFER TO DETAIL 2/AW101.
7. NOT USED.
8. VINYL WALL GRAPHIC ENTIRE WALL, REFER TO DETAIL 5/AW101. DEDUCT ALTERNATE #2: REMOVE VINYL WALL GRAPHIC FROM SCOPE. PAINT ENTIRE WALL SOLID COLOR TO MATCH CORRESPONDING LEVEL THEME COLOR.
9. LOCATION OF LEVEL NUMBER AND GRAPHIC AS PART OF VINYL WALL COVERING, REFER TO DETAIL 5/AW101. DEDUCT ALTERNATE #2: LEVEL NUMBER AND GRAPHIC SHALL BE PAINTED ON SOLID COLOR BACKGROUND.
10. PROVIDE PAINTED COLOR STRIPE FULL LENGTH OF WALL.. PAINT COLOR SHALL MATCH ASSOCIATED LEVEL COLOR. STRIPE WIDTH SHALL MATCH EXISTING WIDTH OF STRIPES ON LOWER LEVELS.
11. EXISTING YELLOW COLOR STRIPE TO REMAIN. PATCH AS REQUIRED FOR SMOOTH, STRAIGHT STRIPE.
12. EXISTING PAINTED COLOR STRIPE TO REMAIN. PATCH AS REQUIRED FOR SMOOTH, STRAIGHT STRIPE.
13. PAINT (2) DESIGNATED FACES OF COLUMN FULL HEIGHT (REFER WAYFINDING PLAN); PAINT COLOR SHALL MATCH ASSOCIATED LEVEL COLOR. APPLY LEVEL NUMBER TO BOTH FACES.
14. PAINT (3) DESIGNATED FACES OF COLUMN FULL HEIGHT. PAINT COLOR SHALL MATCH ASSOCIATED LEVEL COLOR. APPLY LEVEL NUMBER TO FRONT FACE ONLY. REFER TO DETAIL 3/AW605 FOR ADDITIONAL INFORMATION.
15. PAINT (4) DESIGNATED FACES OF COLUMN FULL HEIGHT; PAINT COLOR SHALL MATCH ASSOCIATED LEVEL COLOR.
16. PAINT UNDERSIDE OF BEAM ABOVE AND ADJACENT WALLS WITH COLOR AS INDICATED. WIDTH OF PAINT ON ADJACENT WALLS SHALL MATCH WIDTH OF BEAM ABOVE. COLOR ENDS AT FLOOR OR TOP OF BEAM BELOW.
17. PAINT WALLS WITH A NEUTRAL COLOR THAT CLOSELY MATCHES THE PRECAST COLOR. PAINT WALLS FLOOR TO UNDERSIDE OF DECK AND CORNER TO CORNER AS INDICATED.
18. LETTERING AND VA SEAL ADHERED TO EXTERIOR FACE OF CURTAIN WALL PANEL. REFER TO DETAIL 2/AW102.
19. LETTERING AND VA SEAL ADHERED TO INTERIOR FACE OF CURTAIN WALL PANEL. REFER TO DETAIL 3/AW102.
20. BID DEDUCT #3: ADDED SIGNAGE 28E.

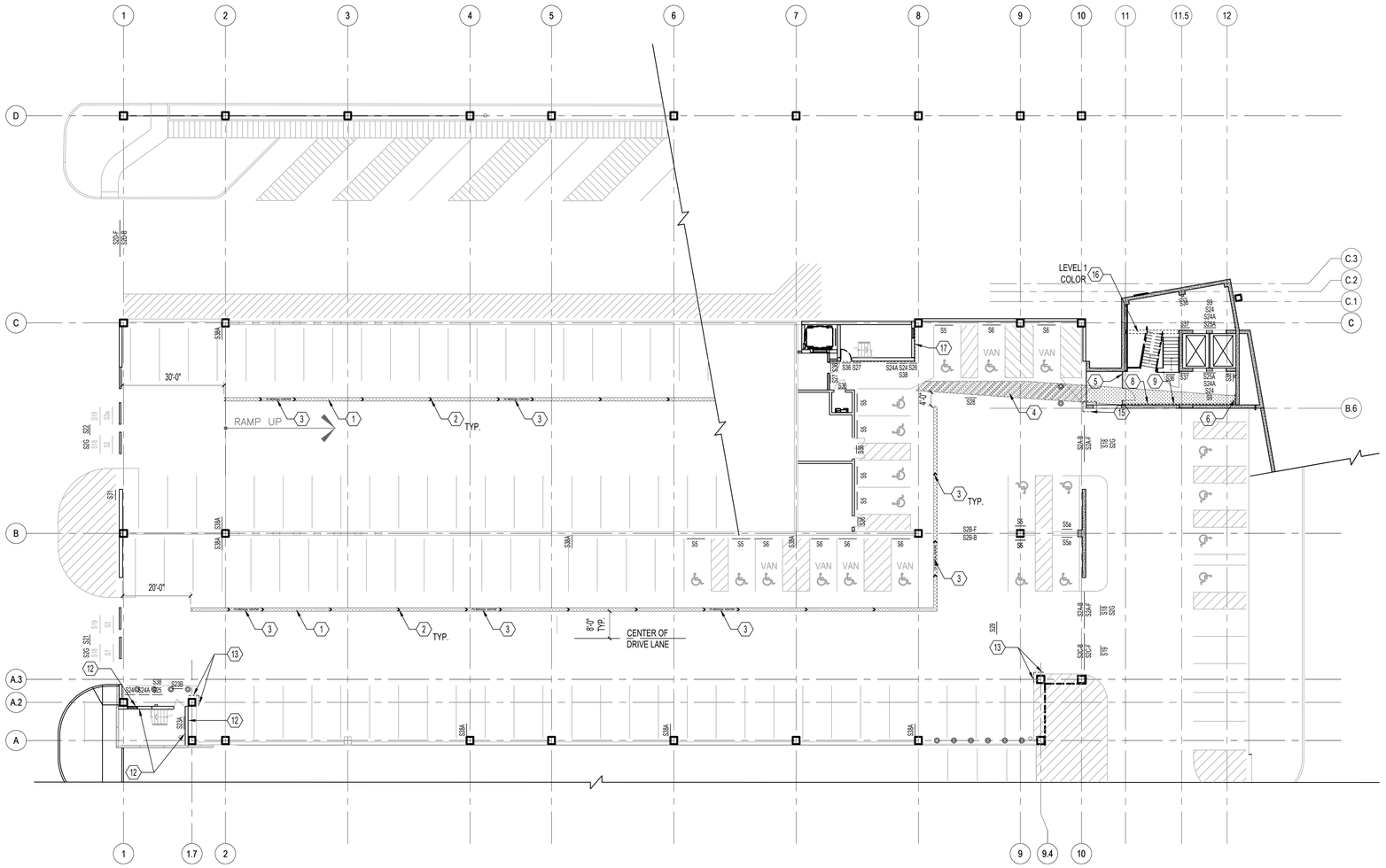

1 WAYFINDING FLOOR PLAN - LEVEL 1
1/16"=1'-0"

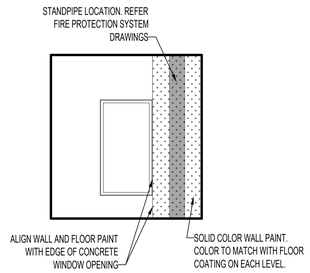

2 WAYFINDING ELEVATION
1/4"=1'-0"

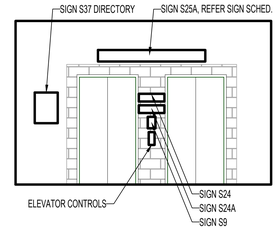

3 WAYFINDING ELEVATION
1/4"=1'-0"

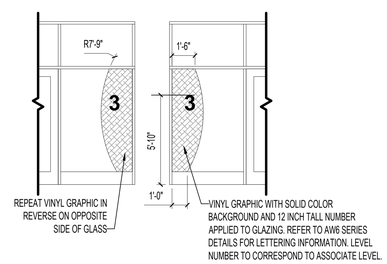

4 WAYFINDING ELEVATION
1/4"=1'-0"

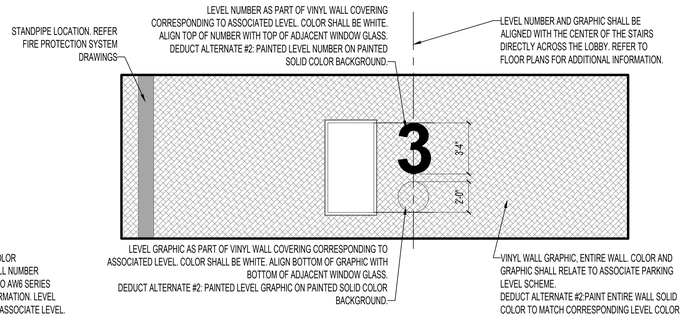

5 WAYFINDING ELEVATION
1/4"=1'-0"

ISSUE FOR BID	08-09-2024
Revisions:	Date:

CONSULTANT

ARCHITECT/ENGINEER OF RECORD

BANCROFT ARCHITECTS + ENGINEERS
3300 Dundee Rd.
Northbrook, IL 60062
T: 847.952.9362
www.bancroft-ae.com

STAMP

LICENSED ARCHITECT CACHU D. GAMAGE 001.020599 STATE OF ILLINOIS

Office of Construction and Facilities Management

VA U.S. Department of Veterans Affairs

Drawing Title: ARCHITECTURAL- WAYFINDING FLOOR PLAN - LEVEL 1	Phase: ISSUE FOR BID	Project Title: PARKING RAMP EXPANSION	Project Number: 528-18-375
			Building Number: 29
Approved: Project Director		Location: 3495 BAILEY AVE., BUFFALO, NY 14215	Drawing Number: AW101
		Issue Date: 08-09-2024 / Checked: -- / Drawn: CG	

VA FORM 08 - 6231

K:\CCG_PROJECTS\2021\21-113 - Parking Ramp (Buffalo, NY)\400- Dwg\Docs\402- Drawings\WORKING\21-113_AW101.dwg
6/14/2009 12:39:03 PM

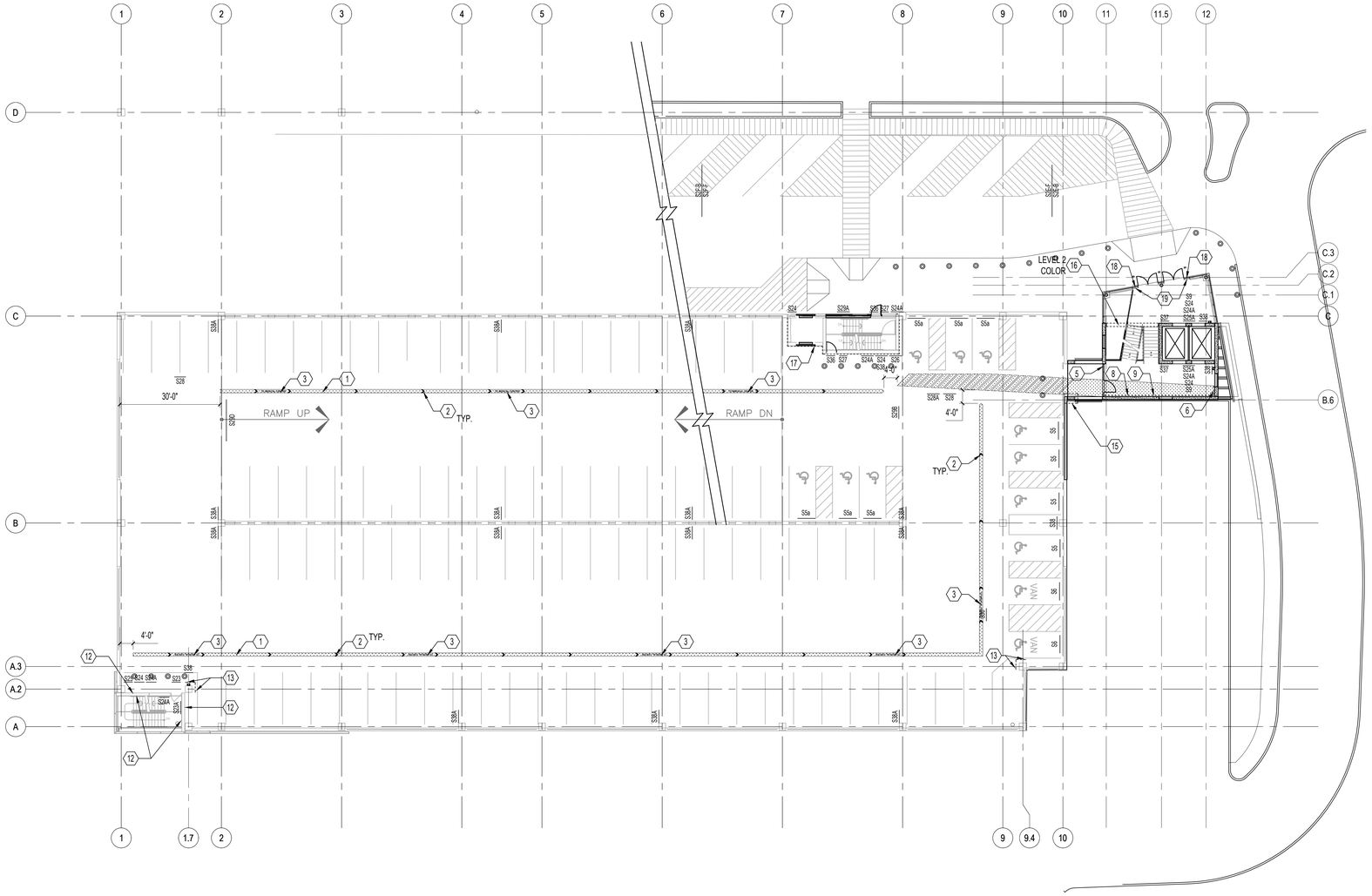

1 WAYFINDING FLOOR PLAN - LEVEL 2
1/16"=1'-0"

WAYFINDING PLAN LEGEND

- SIGN MARK (SEE SIGN SCHEDULE)
- FACE OF SIGN
- NEW SIGN
- EXISTING TO REMAIN SIGN
- PAINTED TRAFFIC COATING
- VINYL WALL GRAPHIC

LEVEL ASSIGNED COLORS AND GRAPHICS (CMYK)

LEVEL 5:	C4 M67 Y86 K0 (ARANCLATA ORANGE)	SUN
LEVEL 4:	C61 M78 Y20 K4 (PURPLE PRINT)	CLOUDS
LEVEL 3:	MATCH EXISTING (YELLOW)	RAIN
LEVEL 2:	MATCH EXISTING (RED)	FLOWERS
LEVEL M:	C95 M76 Y0 K0 (SAILBOAT BLUE)	BUILDING
LEVEL 1:	MATCH EXISTING (GREEN)	TREES
LEVEL 0:	C36 M60 W71 K21 (MODENA MUD)	ROCKS

NOTE: EXACT WALL GRAPHIC LOGO SHALL BE SUBMITTED TO AND APPROVED BY ARCHITECT OF RECORD AND VA COR PRIOR TO FABRICATION AND INSTALLATION.

WAYFINDING PLAN NOTES

A. SEE SHEETS AW601 & AW602 FOR SIGN SCHEDULE & GRAPHICS DETAILS.

B. REVIEW THIS DRAWING IN CONJUNCTION WITH CORRESPONDING CIVIL AND STRUCTURAL DRAWINGS.

WAYFINDING KEYNOTES

1. 12 INCH WIDE PAINTED STRIPE ON PARKING DECK. STRIPE COLOR TO MATCH ASSOCIATED LEVEL COLOR SCHEME. REFER TO DETAIL 1/AW605.DEDUCT ALTERNATE #2: REMOVE FROM SCOPE OF WORK..
2. PAINTED DIRECTIONAL CHEVRON ON PARKING DECK. REFER TO DETAIL 1/AW605. DEDUCT ALTERNATE #2: REMOVE FROM SCOPE OF WORK.
3. PAINTED DIRECTIONAL LETTERING ON PARKING DECK. REFER TO DETAIL 1/AW605. DEDUCT ALTERNATE #2: REMOVE FROM SCOPE OF WORK.
4. PAINTED PEDESTRIAN CROSSWALK MATCHING ASSOCIATED LEVEL COLOR SCHEME. REFER TO DETAIL 2/AW605. DEDUCT ALTERNATE #2: REMOVE FROM SCOPE OF WORK.
5. VINYL GRAPHIC ON BOTH SIDES OF GLASS. REFER TO DETAIL 4/AW101.
6. FLOOR COATING TO ALIGN WITH EDGE OF WINDOW OPENING. APPLY PAINT ON WALL TO MATCH FLOOR COATING COLOR. REFER TO DETAIL 2/AW101.
7. NOT USED.
8. VINYL WALL GRAPHIC ENTIRE WALL, REFER TO DETAIL 5/AW101. DEDUCT ALTERNATE #2: REMOVE VINYL WALL GRAPHIC FROM SCOPE. PAINT ENTIRE WALL SOLID COLOR TO MATCH CORRESPONDING LEVEL THEME COLOR.
9. LOCATION OF LEVEL NUMBER AND GRAPHIC AS PART OF VINYL WALL COVERING, REFER TO DETAIL 5/AW101. DEDUCT ALTERNATE #2: LEVEL NUMBER AND GRAPHIC SHALL BE PAINTED ON SOLID COLOR BACKGROUND.
10. PROVIDE PAINTED COLOR STRIPE FULL LENGTH OF WALL. PAINT COLOR SHALL MATCH ASSOCIATED LEVEL COLOR. STRIPE WIDTH SHALL MATCH EXISTING WIDTH OF STRIPES ON LOWER LEVELS.
11. EXISTING YELLOW COLOR STRIPE TO REMAIN. PATCH AS REQUIRED FOR SMOOTH, STRAIGHT STRIPE.
12. EXISTING PAINTED COLOR STRIPE TO REMAIN. PATCH AS REQUIRED FOR SMOOTH, STRAIGHT STRIPE.
13. PAINT (2) DESIGNATED FACES OF COLUMN FULL HEIGHT (REFER WAYFINDING PLAN); PAINT COLOR SHALL MATCH ASSOCIATED LEVEL COLOR. APPLY LEVEL NUMBER TO BOTH FACES.
14. PAINT (3) DESIGNATED FACES OF COLUMN FULL HEIGHT. PAINT COLOR SHALL MATCH ASSOCIATED LEVEL COLOR. APPLY LEVEL NUMBER TO FRONT FACE ONLY. REFER TO DETAIL 3/AW605 FOR ADDITIONAL INFORMATION.
15. PAINT (4) DESIGNATED FACES OF COLUMN FULL HEIGHT. PAINT COLOR SHALL MATCH ASSOCIATED LEVEL COLOR.
16. PAINT UNDERSIDE OF BEAM ABOVE AND ADJACENT WALLS WITH COLOR AS INDICATED. WIDTH OF PAINT ON ADJACENT WALLS SHALL MATCH WIDTH OF BEAM ABOVE. COLOR ENDS AT FLOOR OR TOP OF BEAM BELOW.
17. PAINT WALLS WITH A NEUTRAL COLOR THAT CLOSELY MATCHES THE PRECAST COLOR. PAINT WALLS FLOOR TO UNDERSIDE OF DECK AND CORNER TO CORNER AS INDICATED.
18. LETTERING AND VA SEAL ADHERED TO EXTERIOR FACE OF CURTAIN WALL PANEL. REFER TO DETAIL 2/AW102.
19. LETTERING AND VA SEAL ADHERED TO INTERIOR FACE OF CURTAIN WALL PANEL. REFER TO DETAIL 3/AW102.
20. BID DEDUCT #3: ADDED SIGNAGE 28E.

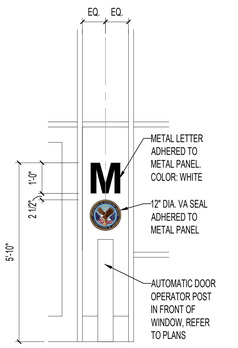

2 WAYFINDING ELEV.
1/2"=1'-0"

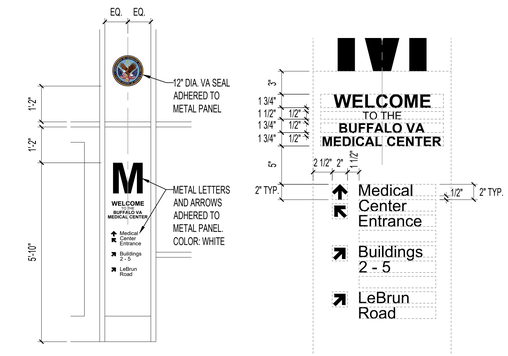

3 WAYFINDING ELEVATION
1/2"=1'-0"

ISSUE FOR BID	08-09-2024
Revisions:	Date:

CONSULTANT

ARCHITECT/ENGINEER OF RECORD

BANCROFT ARCHITECTS + ENGINEERS
3300 Dundee Rd.
Northbrook, IL 60062
T: 847.952.9362
www.bancroft-ae.com

STAMP

Office of Construction and Facilities Management

VA U.S. Department of Veterans Affairs

Drawing Title: ARCHITECTURAL- WAYFINDING FLOOR PLAN - LEVEL 2	Phase: ISSUE FOR BID	Project Title: PARKING RAMP EXPANSION	Project Number: 528-18-375
			Building Number: 29
Approved: Project Director		Location: 3495 BAILEY AVE., BUFFALO, NY 14215	Drawing Number: AW102
		Issue Date: 08-09-2024 / Checked: --- / Drawn: CG	

K:\CCG_PROJECTS\2021\21-113 - Parking Ramp (Buffalo, NY)\400- DesDocs\402- Drawings\WORKING\21-113_AW102.dwg
6/14/2009 12:39:03 PM

VA FORM 08 - 6231

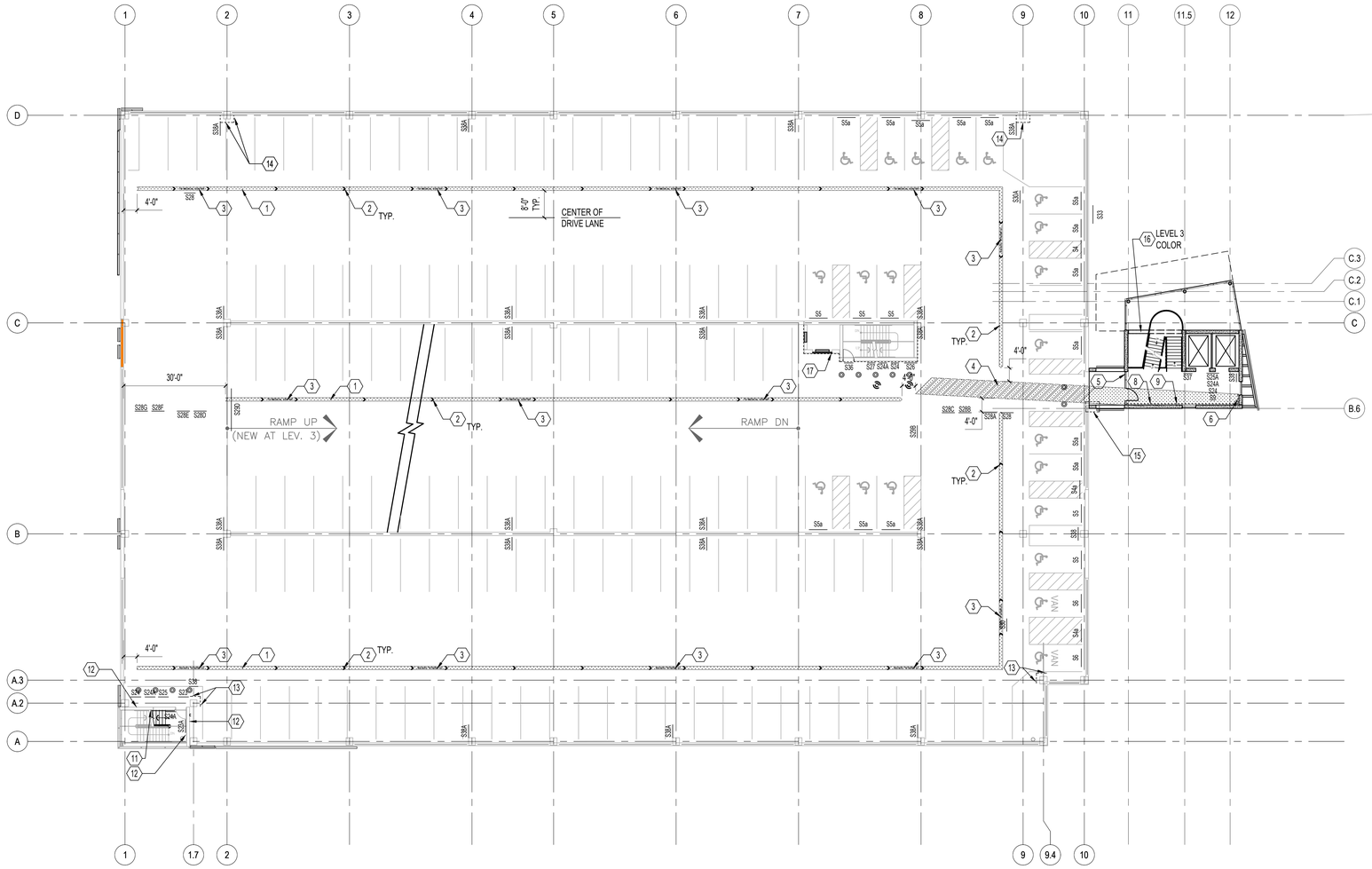

1 WAYFINDING FLOOR PLAN - LEVEL 3
1/16"=1'-0"

WAYFINDING PLAN LEGEND

SIGN MARK (SEE SIGN SCHEDULE)

FACE OF SIGN

NEW SIGN

EXISTING TO REMAIN SIGN

PAINTED TRAFFIC COATING

VINYL WALL GRAPHIC

LEVEL ASSIGNED COLORS AND GRAPHICS (CMYK)

LEVEL 5:	C4 M67 Y66 K0 (ARANCLATA ORANGE)	SUN
LEVEL 4:	C61 M78 Y20 K4 (PURPLE PRINT)	CLOUDS
LEVEL 3:	MATCH EXISTING (YELLOW)	RAIN
LEVEL 2:	MATCH EXISTING (RED)	FLOWERS
LEVEL M:	C95 M76 Y0 K0 (SAILBOAT BLUE)	BUILDING
LEVEL 1:	MATCH EXISTING (GREEN)	TREES
LEVEL 0:	C36 M60 W71 K21 (MODENA MUD)	ROCKS

NOTE: EXACT WALL GRAPHIC LOGO SHALL BE SUBMITTED TO AND APPROVED BY ARCHITECT OF RECORD AND VA COR PRIOR TO FABRICATION AND INSTALLATION.

WAYFINDING PLAN NOTES

A. SEE SHEETS AW601 & AW602 FOR SIGN SCHEDULE & GRAPHICS DETAILS.

B. REVIEW THIS DRAWING IN CONJUNCTION WITH CORRESPONDING CIVIL AND STRUCTURAL DRAWINGS.

(X) WAYFINDING KEYNOTES

1. 12 INCH WIDE PAINTED STRIPE ON PARKING DECK. STRIPE COLOR TO MATCH ASSOCIATED LEVEL COLOR SCHEME. REFER TO DETAIL 1/AW605.DEDUCT ALTERNATE #2: REMOVE FROM SCOPE OF WORK..
2. PAINTED DIRECTIONAL CHEVRON ON PARKING DECK. REFER TO DETAIL 1/AW605. DEDUCT ALTERNATE #2: REMOVE FROM SCOPE OF WORK.
3. PAINTED DIRECTIONAL LETTERING ON PARKING DECK. REFER TO DETAIL 1/AW605. DEDUCT ALTERNATE #2: REMOVE FROM SCOPE OF WORK.
4. PAINTED PEDESTRIAN CROSSWALK MATCHING ASSOCIATED LEVEL COLOR SCHEME. REFER TO DETAIL 2/AW605. DEDUCT ALTERNATE #2: REMOVE FROM SCOPE OF WORK.
5. VINYL GRAPHIC ON BOTH SIDES OF GLASS. REFER TO DETAIL 4/AW101.
6. FLOOR COATING TO ALIGN WITH EDGE OF WINDOW OPENING. APPLY PAINT ON WALL TO MATCH FLOOR COATING COLOR. REFER TO DETAIL 2/AW101.
7. NOT USED.
8. VINYL WALL GRAPHIC ENTIRE WALL. REFER TO DETAIL 5/AW101. DEDUCT ALTERNATE #2: REMOVE VINYL WALL GRAPHIC FROM SCOPE. PAINT ENTIRE WALL SOLID COLOR TO MATCH CORRESPONDING LEVEL THEME COLOR.
9. LOCATION OF LEVEL NUMBER AND GRAPHIC AS PART OF VINYL WALL COVERING, REFER TO DETAIL 5/AW101. DEDUCT ALTERNATE #2: LEVEL NUMBER AND GRAPHIC SHALL BE PAINTED ON SOLID COLOR BACKGROUND.
10. PROVIDE PAINTED COLOR STRIPE FULL LENGTH OF WALL.. PAINT COLOR SHALL MATCH ASSOCIATED LEVEL COLOR. STRIPE WIDTH SHALL MATCH EXISTING WIDTH OF STRIPES ON LOWER LEVELS.
11. EXISTING YELLOW COLOR STRIPE TO REMAIN. PATCH AS REQUIRED FOR SMOOTH, STRAIGHT STRIPE.
12. EXISTING PAINTED COLOR STRIPE TO REMAIN. PATCH AS REQUIRED FOR SMOOTH, STRAIGHT STRIPE.
13. PAINT (2) DESIGNATED FACES OF COLUMN FULL HEIGHT (REFER WAYFINDING PLAN); PAINT COLOR SHALL MATCH ASSOCIATED LEVEL COLOR. APPLY LEVEL NUMBER TO BOTH FACES.
14. PAINT (3) DESIGNATED FACES OF COLUMN FULL HEIGHT. PAINT COLOR SHALL MATCH ASSOCIATED LEVEL COLOR. APPLY LEVEL NUMBER TO FRONT FACE ONLY. REFER TO DETAIL 3/AW605 FOR ADDITIONAL INFORMATION.
15. PAINT (4) DESIGNATED FACES OF COLUMN FULL HEIGHT; PAINT COLOR SHALL MATCH ASSOCIATED LEVEL COLOR.
16. PAINT UNDERSIDE OF BEAM ABOVE AND ADJACENT WALLS WITH COLOR AS INDICATED. WIDTH OF PAINT ON ADJACENT WALLS SHALL MATCH WIDTH OF BEAM ABOVE. COLOR ENDS AT FLOOR OR TOP OF BEAM BELOW.
17. PAINT WALLS WITH A NEUTRAL COLOR THAT CLOSELY MATCHES THE PRECAST COLOR. PAINT WALLS FLOOR TO UNDERSIDE OF DECK AND CORNER TO CORNER AS INDICATED.
18. LETTERING AND VA SEAL ADHERED TO EXTERIOR FACE OF CURTAIN WALL PANEL. REFER TO DETAIL 2/AW102.
19. LETTERING AND VA SEAL ADHERED TO INTERIOR FACE OF CURTAIN WALL PANEL. REFER TO DETAIL 3/AW102.
20. BID DEDUCT #3: ADDED SIGNAGE 28E.

ISSUE FOR BID	08-09-2024
Revisions:	Date:

CONSULTANT

ARCHITECT/ENGINEER OF RECORD

BANCROFT ARCHITECTS + ENGINEERS
3300 Dundee Rd.
Northbrook, IL 60062
T: 847.952.9362
www. bancroft-ae.com

STAMP

Office of Construction and Facilities Management

VA U.S. Department of Veterans Affairs

Drawing Title: ARCHITECTURAL- WAYFINDING FLOOR PLAN - LEVEL 3

Approved: Project Director

Phase: ISSUE FOR BID

Project Title: PARKING RAMP EXPANSION

Location: 3495 BAILEY AVE., BUFFALO, NY 14215

Issue Date: 08-09-2024 | Checked: -- | Drawn: CG

Project Number: 528-18-375

Building Number: 29

Drawing Number: AW103

6/14/2009 12:39:03 PM

K:\CCG_PROJECTS\2021\21-113 - Parking Ramp (Buffalo, NY)\400- DataDocs\402- Drawings\WORKING\21-113_AW103.dwg

VA FORM 08 - 6231

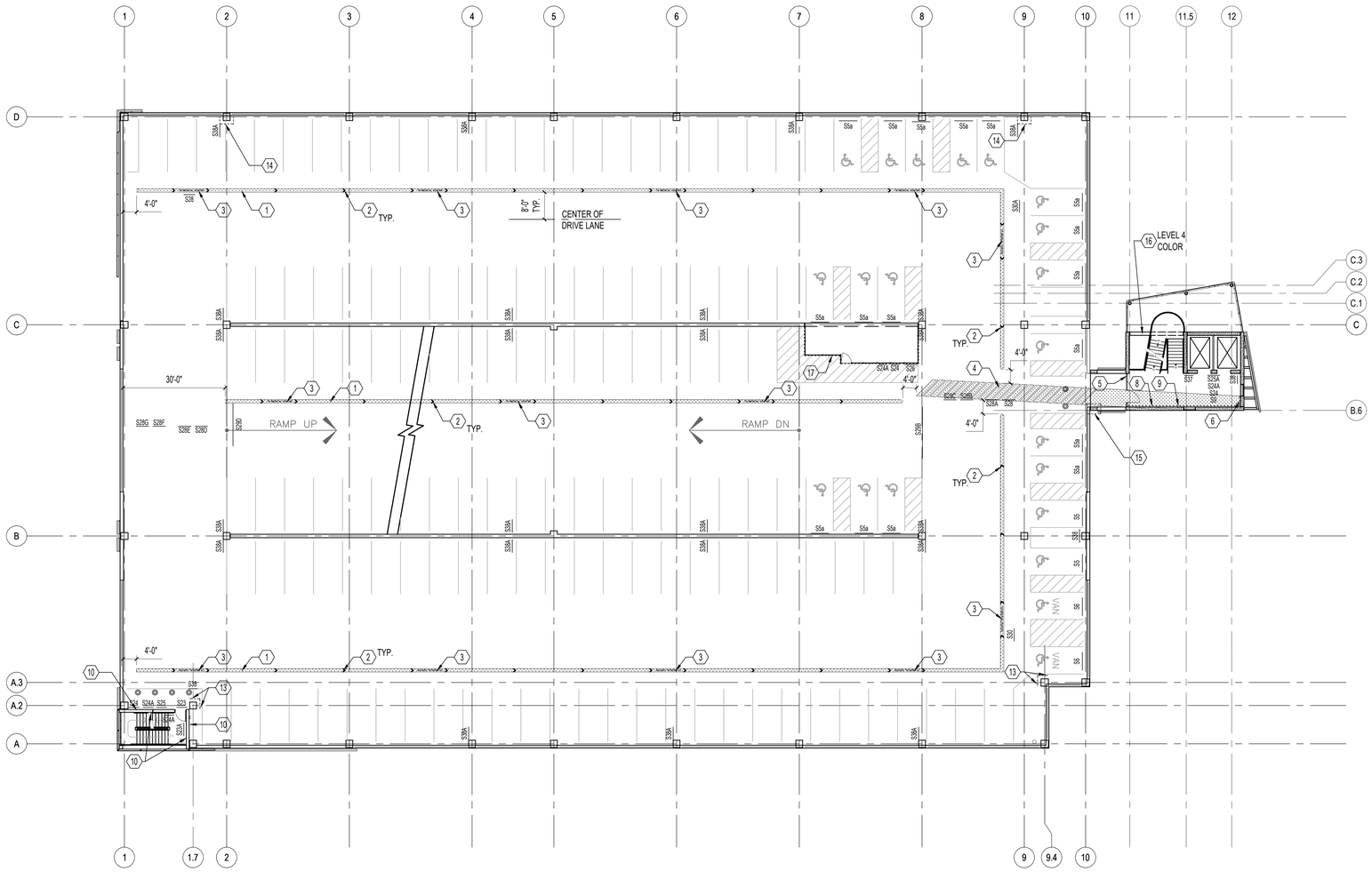

1 WAYFINDING FLOOR PLAN - LEVEL 4

1/16"=1'-0"

WAYFINDING PLAN LEGEND

S10 — SIGN MARK (SEE SIGN SCHEDULE)

FACE OF SIGN

S10 — NEW SIGN

S10 — EXISTING TO REMAIN SIGN

PAINTED TRAFFIC COATING

VINYL WALL GRAPHIC

LEVEL ASSIGNED COLORS AND GRAPHICS (CMYK)

LEVEL 5:	C4 M67 Y86 K0 (ARANCLATA ORANGE)	SUN
LEVEL 4:	C61 M78 Y20 K4 (PURPLE PRINT)	CLOUDS
LEVEL 3:	MATCH EXISTING (YELLOW)	RAIN
LEVEL 2:	MATCH EXISTING (RED)	FLOWERS
LEVEL M:	C95 M76 Y0 K0 (SAILBOAT BLUE)	BUILDING
LEVEL 1:	MATCH EXISTING (GREEN)	TREES
LEVEL 0:	C36 M60 W71 K21 (MODENA MUD)	ROCKS

NOTE: EXACT WALL GRAPHIC LOGO SHALL BE SUBMITTED TO AND APPROVED BY ARCHITECT OF RECORD AND VA COR PRIOR TO FABRICATION AND INSTALLATION.

WAYFINDING PLAN NOTES

A. SEE SHEETS AW601 & AW602 FOR SIGN SCHEDULE & GRAPHICS DETAILS.

B. REVIEW THIS DRAWING IN CONJUNCTION WITH CORRESPONDING CIVIL AND STRUCTURAL DRAWINGS.

WAYFINDING KEYNOTES

1. 12 INCH WIDE PAINTED STRIPE ON PARKING DECK. STRIPE COLOR TO MATCH ASSOCIATED LEVEL COLOR SCHEME. REFER TO DETAIL 1/AW605.DEDUCT ALTERNATE #2: REMOVE FROM SCOPE OF WORK..
2. PAINTED DIRECTIONAL CHEVRON ON PARKING DECK. REFER TO DETAIL 1/AW605. DEDUCT ALTERNATE #2: REMOVE FROM SCOPE OF WORK.
3. PAINTED DIRECTIONAL LETTERING ON PARKING DECK. REFER TO DETAIL 1/AW605. DEDUCT ALTERNATE #2: REMOVE FROM SCOPE OF WORK.
4. PAINTED PEDESTRIAN CROSSWALK MATCHING ASSOCIATED LEVEL COLOR SCHEME. REFER TO DETAIL 2/AW605. DEDUCT ALTERNATE #2: REMOVE FROM SCOPE OF WORK.
5. VINYL GRAPHIC ON BOTH SIDES OF GLASS. REFER TO DETAIL 4/AW101.
6. FLOOR COATING TO ALIGN WITH EDGE OF WINDOW OPENING. APPLY PAINT ON WALL TO MATCH FLOOR COATING COLOR. REFER TO DETAIL 2/AW101.
7. NOT USED.
8. VINYL WALL GRAPHIC ENTIRE WALL, REFER TO DETAIL 5/AW101. DEDUCT ALTERNATE #2: REMOVE VINYL WALL GRAPHIC FROM SCOPE. PAINT ENTIRE WALL SOLID COLOR TO MATCH CORRESPONDING LEVEL THEME COLOR.
9. LOCATION OF LEVEL NUMBER AND GRAPHIC AS PART OF VINYL WALL COVERING, REFER TO DETAIL 5/AW101. DEDUCT ALTERNATE #2: LEVEL NUMBER AND GRAPHIC SHALL BE PAINTED ON SOLID COLOR BACKGROUND.
10. PROVIDE PAINTED COLOR STRIPE FULL LENGTH OF WALL. PAINT COLOR SHALL MATCH ASSOCIATED LEVEL COLOR. STRIPE WIDTH SHALL MATCH EXISTING WIDTH OF STRIPES ON LOWER LEVELS.
11. EXISTING YELLOW COLOR STRIPE TO REMAIN. PATCH AS REQUIRED FOR SMOOTH, STRAIGHT STRIPE.
12. EXISTING PAINTED COLOR STRIPE TO REMAIN. PATCH AS REQUIRED FOR SMOOTH, STRAIGHT STRIPE.
13. PAINT (2) DESIGNATED FACES OF COLUMN FULL HEIGHT (REFER WAYFINDING PLAN); PAINT COLOR SHALL MATCH ASSOCIATED LEVEL COLOR. APPLY LEVEL NUMBER TO BOTH FACES.
14. PAINT (3) DESIGNATED FACES OF COLUMN FULL HEIGHT. PAINT COLOR SHALL MATCH ASSOCIATED LEVEL COLOR. APPLY LEVEL NUMBER TO FRONT FACE ONLY. REFER TO DETAIL 3/AW605 FOR ADDITIONAL INFORMATION.
15. PAINT (4) DESIGNATED FACES OF COLUMN FULL HEIGHT. PAINT COLOR SHALL MATCH ASSOCIATED LEVEL COLOR.
16. PAINT UNDERSIDE OF BEAM ABOVE AND ADJACENT WALLS WITH COLOR AS INDICATED. WIDTH OF PAINT ON ADJACENT WALLS SHALL MATCH WIDTH OF BEAM ABOVE. COLOR ENDS AT FLOOR OR TOP OF BEAM BELOW.
17. PAINT WALLS WITH A NEUTRAL COLOR THAT CLOSELY MATCHES THE PRECAST COLOR. PAINT WALLS FLOOR TO UNDERSIDE OF DECK AND CORNER TO CORNER AS INDICATED.
18. LETTERING AND VA SEAL ADHERED TO EXTERIOR FACE OF CURTAIN WALL PANEL. REFER TO DETAIL 2/AW102.
19. LETTERING AND VA SEAL ADHERED TO INTERIOR FACE OF CURTAIN WALL PANEL. REFER TO DETAIL 3/AW102.
20. BID DEDUCT #3: ADDED SIGNAGE 28E.

ISSUE FOR BID	08-09-2024
Revisions:	Date:

CONSULTANT

ARCHITECT/ENGINEER OF RECORD

BANCROFT ARCHITECTS + ENGINEERS
3300 Dundee Rd.
Northbrook, IL 60062
T: 847.952.9362
www. bancroft-ae.com

STAMP

LICENSED ARCHITECT — CHRISTIAN D. GRAHAM — 061124 — STATE OF ILLINOIS

Office of Construction and Facilities Management

VA U.S. Department of Veterans Affairs

Drawing Title	ARCHITECTURAL- WAYFINDING FLOOR PLAN - LEVEL 4
Phase	ISSUE FOR BID
Project Title	PARKING RAMP EXPANSION
Project Number	528-18-375
Building Number	29
Approved: Project Director	
Location	3495 BAILEY AVE., BUFFALO, NY 14215
Issue Date	08-09-2024
Checked	--
Drawn	CG
Drawing Number	AW104

K:\CCO_PROJECTS\2021\21-113 - Parking Ramp (Buffalo, NY)\400- DesDocs\400- Drawings\WORKING\21-113_AW104.dwg
6/14/2009 12:39:03 PM

VA FORM 08 - 6231

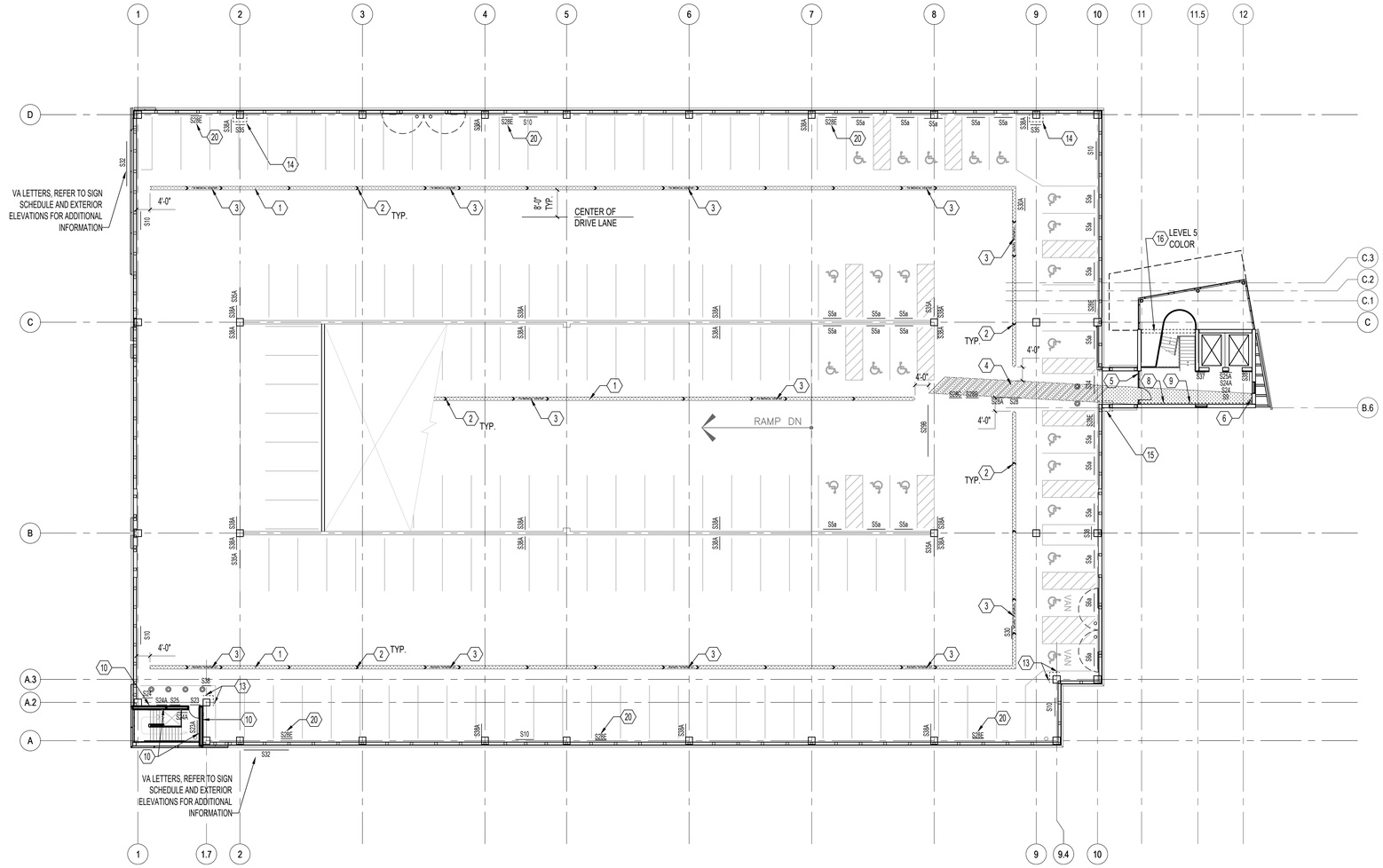

1 WAYFINDING FLOOR PLAN - LEVEL 5

1/16"=1'-0"

WAYFINDING PLAN LEGEND

SIGN MARK (SEE SIGN SCHEDULE)

FACE OF SIGN

NEW SIGN

EXISTING TO REMAIN SIGN

PAINTED TRAFFIC COATING

VINYL WALL GRAPHIC

LEVEL ASSIGNED COLORS AND GRAPHICS (CMYK)

LEVEL 5:	C4 M67 Y86 K0 (ARANCLATA ORANGE)	SUN
LEVEL 4:	C61 M78 Y20 K4 (PURPLE PRINT)	CLOUDS
LEVEL 3:	MATCH EXISTING (YELLOW)	RAIN
LEVEL 2:	MATCH EXISTING (RED)	FLOWERS
LEVEL M:	C95 M76 Y0 K0 (SAILBOAT BLUE)	BUILDING
LEVEL 1:	MATCH EXISTING (GREEN)	TREES
LEVEL 0:	C36 M60 W71 K21 (MODENA MUD)	ROCKS

NOTE: EXACT WALL GRAPHIC LOGO SHALL BE SUBMITTED TO AND APPROVED BY ARCHITECT OF RECORD AND VA COR PRIOR TO FABRICATION AND INSTALLATION.

WAYFINDING PLAN NOTES

A. SEE SHEETS AW601 & AW602 FOR SIGN SCHEDULE & GRAPHICS DETAILS.

B. REVIEW THIS DRAWING IN CONJUNCTION WITH CORRESPONDING CIVIL AND STRUCTURAL DRAWINGS.

(X) WAYFINDING KEYNOTES

1. 12 INCH WIDE PAINTED STRIPE ON PARKING DECK. STRIPE COLOR TO MATCH ASSOCIATED LEVEL COLOR SCHEME. REFER TO DETAIL 1/AW605.DEDUCT ALTERNATE #2: REMOVE FROM SCOPE OF WORK..
2. PAINTED DIRECTIONAL CHEVRON ON PARKING DECK. REFER TO DETAIL 1/AW605. DEDUCT ALTERNATE #2: REMOVE FROM SCOPE OF WORK.
3. PAINTED DIRECTIONAL LETTERING ON PARKING DECK. REFER TO DETAIL 1/AW605. DEDUCT ALTERNATE #2: REMOVE FROM SCOPE OF WORK.
4. PAINTED PEDESTRIAN CROSSWALK MATCHING ASSOCIATED LEVEL COLOR SCHEME. REFER TO DETAIL 2/AW605. DEDUCT ALTERNATE #2: REMOVE FROM SCOPE OF WORK.
5. VINYL GRAPHIC ON BOTH SIDES OF GLASS: REFER TO DETAIL 4/AW101.
6. FLOOR COATING TO ALIGN WITH EDGE OF WINDOW OPENING. APPLY PAINT ON WALL TO MATCH FLOOR COATING COLOR. REFER TO DETAIL 2/AW101.
7. NOT USED.
8. VINYL WALL GRAPHIC ENTIRE WALL, REFER TO DETAIL 5/AW101. DEDUCT ALTERNATE #2: REMOVE VINYL WALL GRAPHIC FROM SCOPE. PAINT ENTIRE WALL SOLID COLOR TO MATCH CORRESPONDING LEVEL THEME COLOR.
9. LOCATION OF LEVEL NUMBER AND GRAPHIC AS PART OF VINYL WALL COVERING, REFER TO DETAIL 5/AW101. DEDUCT ALTERNATE #2: LEVEL NUMBER AND GRAPHIC SHALL BE PAINTED ON SOLID COLOR BACKGROUND.
10. PROVIDE PAINTED COLOR STRIPE FULL LENGTH OF WALL. PAINT COLOR SHALL MATCH ASSOCIATED LEVEL COLOR. STRIPE WIDTH SHALL MATCH EXISTING WIDTH OF STRIPES ON LOWER LEVELS.
11. EXISTING YELLOW COLOR STRIPE TO REMAIN. PATCH AS REQUIRED FOR SMOOTH, STRAIGHT STRIPE.
12. EXISTING PAINTED COLOR STRIPE TO REMAIN. PATCH AS REQUIRED FOR SMOOTH, STRAIGHT STRIPE.
13. PAINT (2) DESIGNATED FACES OF COLUMN FULL HEIGHT (REFER WAYFINDING PLAN); PAINT COLOR SHALL MATCH ASSOCIATED LEVEL COLOR. APPLY LEVEL NUMBER TO BOTH FACES.
14. PAINT (3) DESIGNATED FACES OF COLUMN FULL HEIGHT. PAINT COLOR SHALL MATCH ASSOCIATED LEVEL COLOR. APPLY LEVEL NUMBER TO FRONT FACE ONLY. REFER TO DETAIL 3/AW605 FOR ADDITIONAL INFORMATION.
15. PAINT (4) DESIGNATED FACES OF COLUMN FULL HEIGHT; PAINT COLOR SHALL MATCH ASSOCIATED LEVEL COLOR.
16. PAINT UNDERSIDE OF BEAM ABOVE AND ADJACENT WALLS WITH COLOR AS INDICATED. WIDTH OF PAINT ON ADJACENT WALLS SHALL MATCH WIDTH OF BEAM ABOVE. COLOR ENDS AT FLOOR OR TOP OF BEAM BELOW.
17. PAINT WALLS WITH A NEUTRAL COLOR THAT CLOSELY MATCHES THE PRECAST COLOR. PAINT WALLS FLOOR TO UNDERSIDE OF DECK AND CORNER TO CORNER AS INDICATED.
18. LETTERING AND VA SEAL ADHERED TO EXTERIOR FACE OF CURTAIN WALL PANEL. REFER TO DETAIL 2/AW102.
19. LETTERING AND VA SEAL ADHERED TO INTERIOR FACE OF CURTAIN WALL PANEL. REFER TO DETAIL 3/AW102.
20. BID DEDUCT #3: ADDED SIGNAGE 28E.

ISSUE FOR BID	08-09-2024
Revisions:	Date:

CONSULTANT

ARCHITECT/ENGINEER OF RECORD

BANCROFT ARCHITECTS + ENGINEERS
3300 Dundee Rd.
Northbrook, IL 60062
T: 847.952.9362
www. bancroft-ae.com

STAMP

LICENSED ARCHITECT CRAIG A. ZIMMERMAN 001-022599 STATE OF ILLINOIS

Office of Construction and Facilities Management

VA U.S. Department of Veterans Affairs

Drawing Title: ARCHITECTURAL- WAYFINDING FLOOR PLAN - LEVEL 5	Phase: ISSUE FOR BID	Project Title: PARKING RAMP EXPANSION	Project Number: 528-18-375
Approved: Project Director			Building Number: 29
		Location: 3495 BAILEY AVE., BUFFALO, NY 14215	Drawing Number: AW105
		Issue Date: 08-09-2024 / Checked: CZ / Drawn: II	

K:\CCO_PROJECTS\2021\21-113 - Parking Ramp (Buffalo, NY)\400- Des\Docs\400- Drawings\WORKING\21-113_AW105.dwg
6/14/2009 12:39:03 PM

1 SIGN S1, S2, S2A, S2B, S2C, S2D, S2E, S2G

1/2"=1'-0"

2 SIGN S2F

1"=1'-0"

3 SIGN S5, S5a, S6, S6a

3"=1'-0"

4 SIGN S9

6"=1'-0"

5 SIGN S10

3"=1'-0"

6 SIGN S18, S19

1"=1'-0"

7 SIGN S21

1"=1'-0"

8 SIGN S22

1"=1'-0"

LEVEL ASSIGNED COLORS AND GRAPHICS

(CMYK)

LEVEL 5:	C4 M67 Y86 K0 (ARANCLATA ORANGE)	SUN
LEVEL 4:	C61 M78 Y20 K4 (PURPLE PRINT)	CLOUDS
LEVEL 3:	MATCH EXISTING (YELLOW)	RAIN
LEVEL 2:	MATCH EXISTING (RED)	FLOWERS
LEVEL M:	C95 M76 Y0 K0 (SAILBOAT BLUE)	BUILDING
LEVEL 1:	MATCH EXISTING (GREEN)	TREES
LEVEL 0:	C36 M60 W71 K21 (MODENA MUD)	ROCKS

SIGNAGE GENERAL NOTES

1. SIGN MOUNTING HEIGHT TO BE 2" ABOVE BOTTOM OF BEAMS LEVEL UNLESS NOTED OTHERWISE.
2. SIGN CONTRACTOR SHALL REVIEW SIGN LOCATIONS PRIOR TO INSTALLATION WITH VACOTR TO COORDINATE WITH LIGHTING SYSTEM.
3. SIGNS SHALL BE MOUNTED LEVEL AND PLUMB, UNLESS NOTED OTHERWISE.
4. WHERE TWO (2) SIGNS ARE MOUNTED BACK TO BACK, SMALLEST L DIMENSION SHALL INCREASE TO MATCH LARGEST L DIMENSION.
5. MAXIMUM BOLT INSERT EMBEDMENT LENGTH 1-1/4", UNLESS NOTED OTHERWISE.
6. DO NOT SCALE DRAWINGS.
7. BACKS AND EDGES OF ALL ALUMINUM SIGNS MOUNTED DIRECTLY TO STRUCTURE SHALL BE PAINTED (SIGN BACKGROUND COLOR) TO PREVENT CATHODIC REACTION.
8. SEE AW100 SERIES DRAWINGS FOR SIGN LOCATIONS.
9. ALL FONTS HELVETICA MEDIUM U.N.O.
10. USE LEVEL COLORS AND VA COLORS AS INDICATED AND IN ACCORDANCE WITH THE VA SIGNAGE DESIGN GUIDE. ALL OTHER COLORS SHALL BE PER MUTCD STANDARDS.
11. ALL SIGNAGE SHALL FOLLOW THE DETAILS OUTLINED IN THE VA SIGNAGE DESIGN MANUAL. SIGNAGE DETAILS SHOWN HEREIN ARE SHOWN FOR SPECIFIC DESIGN INTENT RELATED TO THIS PROJECT. CONTRACTOR SHALL VERIFY ALL ASPECTS OF SIGNAGE WITH THE VA PRIOR TO FABRICATION. REFER TO VA SIGNAGE PG-18-10 DESIGN MANUAL FOR ADDITIONAL DETAILS, MATERIALS, INSTALLATION OF EACH SIGN TYPE. CONTACT THE ARCHITECT WHERE CONFLICTS OCCUR.
12. REFER TO CIVIL DRAWINGS FOR LOCATIONS OF SITE DIRECTORIES.
13. SEE AW611 FOR MOUNTING DETAILS.

PARKING RAMP SIGN SCHEDULE

LOCATION*	VA STANDARD SIGN TYPE	SIGN TEXT	SIDE (BACK / FRONT)	MOUNTING TYPE	NOTES
S1	PS-09	8 FT 2 IN		CEILING HUNG	EXISTING TO REMAIN
S2	PS-09	7 FT 0 IN		CEILING HUNG	EXISTING TO REMAIN
S2A	PS-09	⊖ ENTRANCE ONLY ⊖ CLEARANCE 8' - 2"	B F	CEILING HUNG	10' - 0" LONG, BOTTOM OF SIGN AT 8'-2"
S2B	PS-09	EXIT ⊖ DO NOT ENTER ⊖	B F	CEILING HUNG	14' - 0" LONG, BOTTOM OF SIGN AT 8'-2"
S2C	PS-09	⊖ EXIT ONLY ⊖ EXIT	B F	CEILING HUNG	10' - 0" LONG, BOTTOM OF SIGN AT 8'-2"
S2D	PS-09	⊖ ENTRANCE ONLY ⊖ CLEARANCE 12' - 0"	B F	CEILING HUNG	10' - 0" LONG, BOTTOM OF SIGN AT 12'-0"
S2E	PS-09	⊖ DO NOT ENTER ⊖	B F	CEILING HUNG	10' - 0" LONG, BOTTOM OF SIGN AT 12'-0"
S2F	PS-01.03, LAYOUT B	MEDICAL CENTER PARKING GARAGE	B	CEILING HUNG	BOTTOM OF SIGN AT 12'-0", INCLUDE DIRECTIONAL ARROWS
	PS-01.03, LAYOUT A	MEDICAL CENTER	F		BOTTOM OF SIGN AT 12'-0", INCLUDE DIRECTIONAL ARROW
S2G	PS-02.01, LAYOUT A	NO TRUCKS BEYOND THIS POINT MAX CAPACITY #,### lbs		SURFACE MOUNTED	10'-0" LONG, BOTTOM OF SIGN 8' - 10 " A.F.F.
S5 S5a	PS-12.04, LAYOUT A	♿		SURFACE MOUNTED POST MOUNTED	BOTTOM OF SIGN AT 60" A.F.F. MIN.
S6 S6a	PS-12.04, LAYOUT C	♿ .... VAN...		SURFACE MOUNTED POST MOUNTED	BOTTOM OF SIGN AT 60" A.F.F. MIN.
S9	IN-01.04, LAYOUT A	In Case of Fire...		SURFACE MOUNTED	CENTER SIGN 2" ABOVE ELEVATOR CONTROLS
S10	PS-04.01, LAYOUT A	Do Not Pile Snow On Roof		SURFACE MOUNTED	TOP OF SIGN 3" BELOW TOP OF PRECAST PANEL
S18	MATCH EXISTING	Entrance		SURFACE MOUNTED	
S19	MATCH EXISTING	Exit		SURFACE MOUNTED	
S21	PS-14, LAYOUT A	P		PERPENDICULAR TO EXTERIOR WALL	WITHOUT LED LETTERING
S22	PS-14, LAYOUT C	P ♿ Drop Off		PERPENDICULAR TO EXTERIOR WALL	WITHOUT LED LETTERING
S23	PS-03.01, LAYOUT C	Exit Elevator Medical Center		SURFACE MOUNTED	INCLUDE DIRECTIONAL ARROWS
S24	IN-02.02	No Smoking, No Vaping...		SURFACE MOUNTED	BOTTOM OF SIGN 60" A.F.F.
S24A	IN-02.02	Crisis Support 24/7...		SURFACE MOUNTED	BOTTOM OF SIGN 60" A.F.F.
S25	PS-06	STAIRS SOUTH / LEVELS 1-5		SURFACE MOUNTED	INCLUDE STAIR GRAPHIC
S25A	PS-06	ELEVATORS NORTH / LEVELS 0-5		SURFACE MOUNTED	CENTERED ABOVE ELEVATOR DOORS; INCLUDE ELEVATOR GRAPHIC
S26	PS-03.02, LAYOUT A	MEDICAL CENTER		SURFACE MOUNTED	INCLUDE LEVEL # AND DIRECTIONAL ARROW
S26A	PS-03.02, LAYOUT B	Level X		SURFACE MOUNTED	INCLUDE LEVEL #, DIRECTIONAL ARROW AND LEVEL SYMBOL
S26B	PS-03.02, LAYOUT C	Elevators Stairs Exit		SURFACE MOUNTED	INCLUDE DIRECTIONAL ARROWS
S27	IN-04.01, LAYOUT A	ROOM NAME AND NUMBER		SURFACE MOUNTED	INSTALL BOTTOM OF SIGN 60" A.F.F. SAME SIDE OF DOOR HANDLE
S28*	PS-01.04, LAYOUT B	STAIRS ELEVATORS		CEILING HUNG	INCLUDE DIRECTIONAL ARROW; REMOVE VERTICAL COLOR BAND FROM OPPOSITE SIDE TO ARROW
S28A*	PS-01.04, LAYOUT B	EXIT		CEILING HUNG	INCLUDE DIRECTIONAL ARROW; REMOVE VERTICAL COLOR BAND FROM OPPOSITE SIDE TO ARROW
S28B*	PS-01.04, LAYOUT B	STAIRS ELEVATORS		CEILING HUNG	INCLUDE DIRECTIONAL ARROW; REMOVE VERTICAL COLOR BAND FROM OPPOSITE SIDE TO ARROW
S28C*	PS-01.04, LAYOUT B	EXIT		CEILING HUNG	INCLUDE DIRECTIONAL ARROW; REMOVE VERTICAL COLOR BAND FROM OPPOSITE SIDE TO ARROW
S28D	PS-01.04, LAYOUT B	ADDITIONAL PARKING		CEILING HUNG	INCLUDE DIRECTIONAL ARROW; REMOVE VERTICAL COLOR BAND FROM OPPOSITE SIDE TO ARROW
S28E	PS-01.04, LAYOUT B	PARKING EXIT ELEVATORS		CEILING HUNG	INCLUDE DIRECTIONAL ARROW; REMOVE VERTICAL COLOR BAND FROM OPPOSITE SIDE TO ARROW
S28F	PS-01.04, LAYOUT B	ADDITIONAL PARKING		CEILING HUNG	INCLUDE DIRECTIONAL ARROW; REMOVE VERTICAL COLOR BAND FROM OPPOSITE SIDE TO ARROW
S28G	PS-01.04, LAYOUT B	ELEVATORS		CEILING HUNG	INCLUDE DIRECTIONAL ARROW; REMOVE VERTICAL COLOR BAND FROM OPPOSITE SIDE TO ARROW
S29	PS-02.03, LAYOUT B	ELEVATOR STAIRS EXIT		BEAM HUNG	INCLUDE DIRECTIONAL ARROWS
S29A	PS-02.03, LAYOUT B	ELEVATOR PICK-UP STAIRS DROP-OFF		SURFACE MOUNTED	INCLUDE DIRECTIONAL ARROWS
S29B*	PS-02.03, LAYOUT B	ELEVATOR STAIRS PARKING		BEAM HUNG	INCLUDE DIRECTIONAL ARROWS
S29D	PS-02.03, LAYOUT B	PARKING PARKING EXIT EXIT		BEAM HUNG	INCLUDE DIRECTIONAL ARROWS
S30*	PS-02.04, LAYOUT B	ELEVATOR STAIRS		BEAM HUNG	INCLUDE DIRECTIONAL ARROW
S30A*	PS-02.04, LAYOUT B	ELEVATOR STAIRS		BEAM HUNG	INCLUDE DIRECTIONAL ARROW
S31		NO VEHICLES OVER 8,000 POUNDS		SURFACE MOUNTED	
S32	EN-09	VA		SURFACE MOUNTED	12'-0" ALUMINUM LETTERS, REFER BUILDING ELEVATIONS
S33	PS-04.01, LAYOUT D	Do Not Enter		SURFACE MOUNTED	
S34	PS-02.02, LAYOUT B	To Medical Center		SURFACE MOUNTED	INCLUDE DIRECTIONAL ARROW
S35	PS-05.01	Level X		SURFACE MOUNTED	INCLUDE LEVEL #
S35A**	PS-05.05	Level X		FLAG MOUNTED	INCLUDE LEVEL #
S36	IN-08.02, LAYOUT A	AUTHORIZED Personnel Only		SURFACE MOUNTED	
S37		Garage Directory...		SURFACE MOUNTED	CENTER OF SIGN 60" A.F.F.
S38	IN-01.02	Fire Extinguisher		SURFACE MOUNTED	BOTTOM OF SIGN 80" A.F.F.
S38A	IN-01.31	Fire Extinguisher		FLAG MOUNTED	BOTTOM OF SIGN 80" A.F.F.

NOTES:
*SIGN REQUIRED IN LEVEL 5 ONLY IF PV ARRAY ROOF SYSTEM IS INCLUDED, REFER TO BID DEDUCT ALTERNATES. SIGN REQUIRED AT ALL OTHER LEVELS AS INDICATED PER WAYFINDING PLANS.
**USE THIS SIGN ONLY IF PV ARRAY ROOF IS NOT INCLUDED, REFER TO BID DEDUCT ALTERNATES.

ISSUE FOR BID	08-09-2024
Revisions:	Date:

CONSULTANT

ARCHITECT/ENGINEER OF RECORD

BANCROFT ARCHITECTS + ENGINEERS
3300 Dundee Rd.
Northbrook, IL 60062
T: 847.952.9362
www.bancroft-ae.com

STAMP

LICENSED ARCHITECT CROTAN D. ZAKARIJA 001-023355 STATE OF ILLINOIS 8/9/24

Office of Construction and Facilities Management

VA U.S. Department of Veterans Affairs

Drawing Title: ARCHITECTURAL- WAYFINDING SIGN DETAILS

Approved: Project Director

Phase: ISSUE FOR BID

Project Title: PARKING RAMP EXPANSION

Location: 3495 BAILEY AVE., BUFFALO, NY 14215

Issue Date: 08-09-2024

Checked: CZ

Drawn: CG

Project Number: 528-18-375

Building Number: 29

Drawing Number: AW601

VA FORM 08 - 6231
6/14/2009 12:39:03 PM
K:\CCG_PROJECTS\2021\21-113 - Parking Ramp (Buffalo, NY)\400- DesDocs\402- Drawings\WORKING\21-113_AW601.dwg
21-113_AW601.dwg
1/15/2004

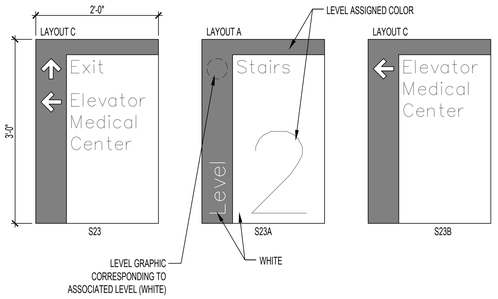

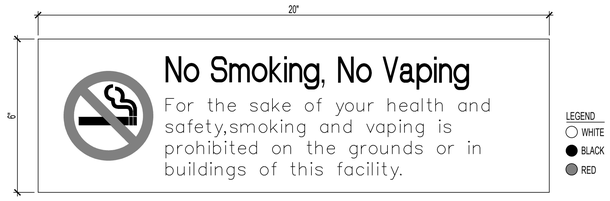

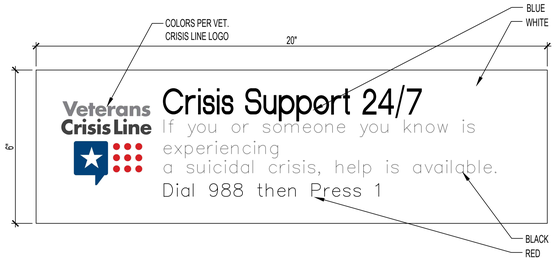

SIGNAGE GENERAL NOTES

1. SIGN MOUNTING HEIGHT TO BE 2" ABOVE BOTTOM OF BEAMS LEVEL UNLESS NOTED OTHERWISE.
2. SIGN CONTRACTOR SHALL REVIEW SIGN LOCATIONS PRIOR TO INSTALLATION WITH VACOTR TO COORDINATE WITH LIGHTING SYSTEM.
3. SIGNS SHALL BE MOUNTED LEVEL AND PLUMB, UNLESS NOTED OTHERWISE.
4. WHERE TWO (2) SIGNS ARE MOUNTED BACK TO BACK, SMALLEST L DIMENSION SHALL INCREASE TO MATCH LARGEST L DIMENSION.
5. MAXIMUM BOLT INSERT EMBEDMENT LENGTH 1-1/4", UNLESS NOTED OTHERWISE.
6. DO NOT SCALE DRAWINGS.
7. BACKS AND EDGES OF ALL ALUMINUM SIGNS MOUNTED DIRECTLY TO STRUCTURE SHALL BE PAINTED (SIGN BACKGROUND COLOR) TO PREVENT CATHODIC REACTION.
8. SEE AW100 SERIES DRAWINGS FOR SIGN LOCATIONS.
9. ALL FONTS HELVETICA MEDIUM U.N.O.
10. USE LEVEL COLORS AND VA COLORS AS INDICATED AND IN ACCORDANCE WITH THE VA SIGNAGE DESIGN GUIDE. ALL OTHER COLORS SHALL BE PER MUTCD STANDARDS.
11. ALL SIGNAGE SHALL FOLLOW THE DETAILS OUTLINED IN THE VA SIGNAGE DESIGN MANUAL. SIGNAGE DETAILS SHOWN HEREIN ARE SHOWN FOR SPECIFIC DESIGN INTENT RELATED TO THIS PROJECT. CONTRACTOR SHALL VERIFY ALL ASPECTS OF SIGNAGE WITH THE VA PRIOR TO FABRICATION. REFER TO VA SIGNAGE PG-18-10 DESIGN MANUAL FOR ADDITIONAL DETAILS, MATERIALS, INSTALLATION OF EACH SIGN TYPE. CONTACT THE ARCHITECT WHERE CONFLICTS OCCUR.
12. REFER TO CIVIL DRAWINGS FOR LOCATIONS OF SITE DIRECTORIES.
13. SEE AW611 FOR MOUNTING DETAILS.

1 SIGN S23, S23A, S23B
1"=1'-0"

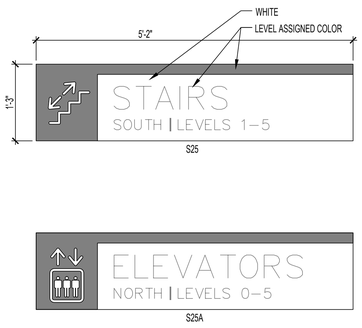

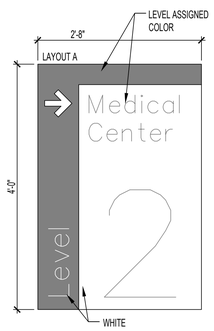

2 SIGN S24
3"=1'-0"

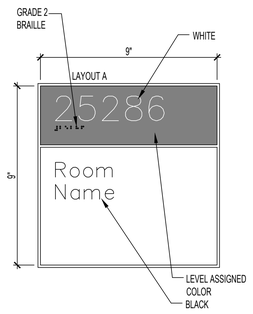

3 SIGN S24A
3"=1'-0"

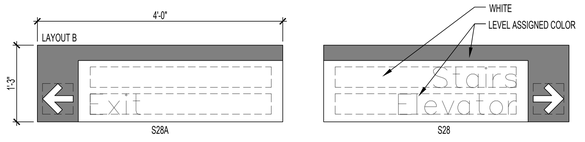

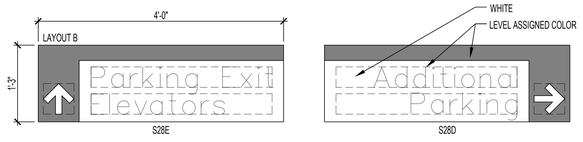

4 SIGN S25, S25A
1"=1'-0"

5 SIGN S26
1"=1'-0"

6 SIGN S27
3"=1'-0"

7 S28, S28A, S28B, S28C
1"=1'-0"

8 SIGN S28D, S28E, S28F, S28G
1"=1'-0"

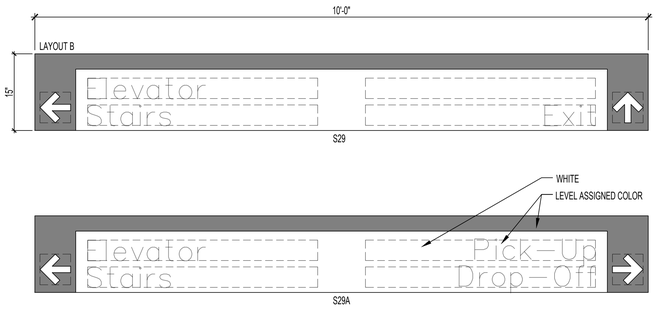

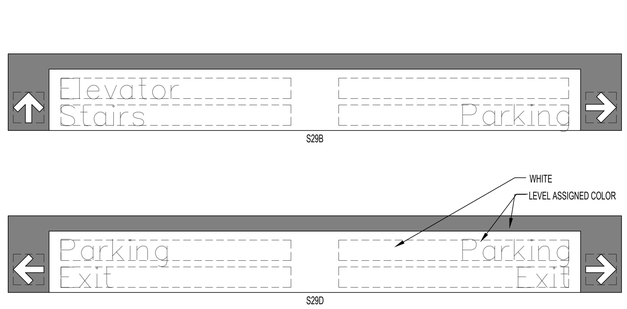

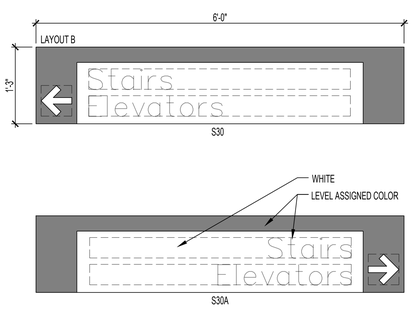

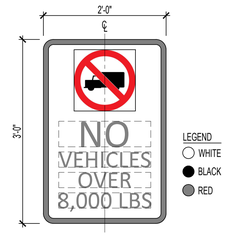

9 SIGN S29, S29A
1"=1'-0"

10 SIGN S29B, S29D
1"=1'-0"

11 SIGN S30, S30A
1"=1'-0"

12 SIGN S31
1"=1'-0"

ISSUE FOR BID	08-09-2024
Revisions:	Date:

CONSULTANT

ARCHITECT/ENGINEER OF RECORD

BANCROFT ARCHITECTS + ENGINEERS
3300 Dundee Rd.
Northbrook, IL 60062
T: 847.952.9362
www. bancroft-ae.com

STAMP

LICENSED ARCHITECT CHRISTOPHER D. ZABARAS 001-020599 STATE OF ILLINOIS 08/31/24

Office of Construction and Facilities Management

VA U.S. Department of Veterans Affairs

Drawing Title: ARCHITECTURAL- WAYFINDING SIGN DETAILS	Phase: ISSUE FOR BID	Project Title: PARKING RAMP EXPANSION	Project Number: 528-18-375
			Building Number: 29
Approved: Project Director		Location: 3495 BAILEY AVE., BUFFALO, NY 14215	Drawing Number: AW602
		Issue Date: 08-09-2024 / Checked: CZ / Drawn: CG	

K:\CCG_PROJECTS\2021\21-113 - Parking Ramp (Buffalo, NY)\400- Dwr\Dwrs\402- Drawings\WORKING\21-113_AW602.dwg
6/14/2009 12:39:03 PM
21-113_AW602.dwg
1/15/2004

VA FORM 08 - 6231

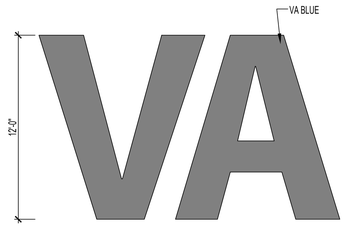

1 SIGN S32
1/4"=1'-0"

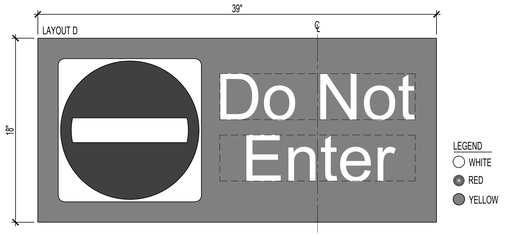

2 SIGN S33
1-1/2"=1'-0"

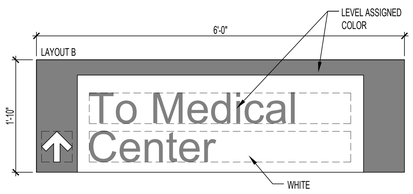

3 SIGN S34
1"=1'-0"

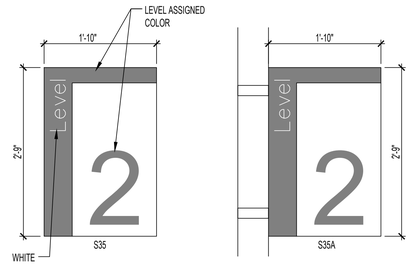

4 SIGN S35, S35A
1"=1'-0"

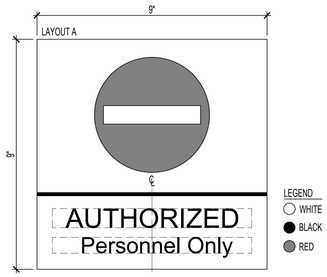

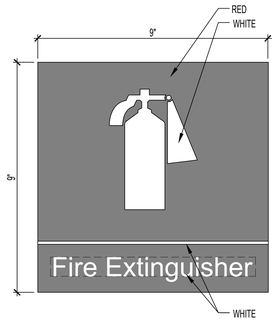

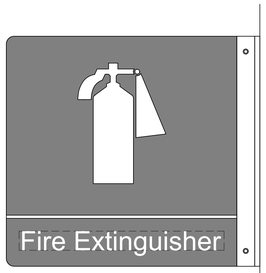

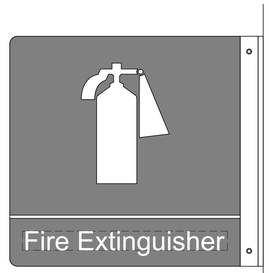

5 SIGN S36
1"=1'-0"

6 SIGN S38
1"=1'-0"

7 SIGN S38A
1"=1'-0"

9 SIGN S39
1"=1'-0"

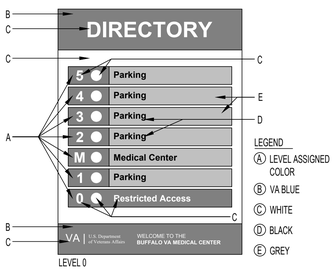

LEVEL 0

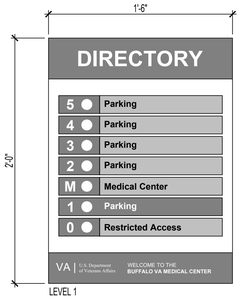

LEVEL 1

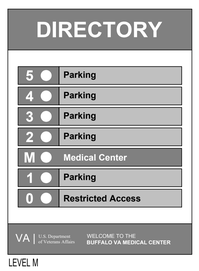

LEVEL M

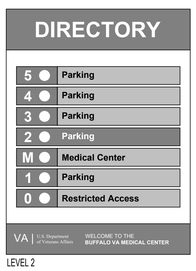

LEVEL 2

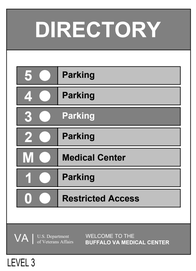

LEVEL 3

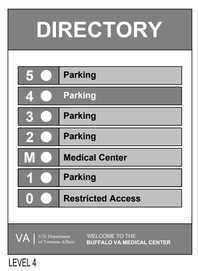

LEVEL 4

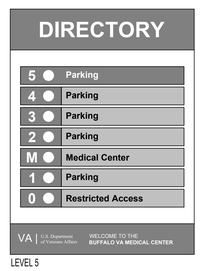

LEVEL 5

SIGNAGE GENERAL NOTES

1. SIGN MOUNTING HEIGHT TO BE 2" ABOVE BOTTOM OF BEAMS LEVEL UNLESS NOTED OTHERWISE.
2. SIGN CONTRACTOR SHALL REVIEW SIGN LOCATIONS PRIOR TO INSTALLATION WITH VACOTR TO COORDINATE WITH LIGHTING SYSTEM.
3. SIGNS SHALL BE MOUNTED LEVEL AND PLUMB, UNLESS NOTED OTHERWISE.
4. WHERE TWO (2) SIGNS ARE MOUNTED BACK TO BACK, SMALLEST L DIMENSION SHALL INCREASE TO MATCH LARGEST L DIMENSION.
5. MAXIMUM BOLT INSERT EMBEDMENT LENGTH 1-1/4", UNLESS NOTED OTHERWISE.
6. DO NOT SCALE DRAWINGS.
7. BACKS AND EDGES OF ALL ALUMINUM SIGNS MOUNTED DIRECTLY TO STRUCTURE SHALL BE PAINTED (SIGN BACKGROUND COLOR) TO PREVENT CATHODIC REACTION.
8. SEE AW100 SERIES DRAWINGS FOR SIGN LOCATIONS.
9. ALL FONTS HELVETICA MEDIUM U.N.O.
10. USE LEVEL COLORS AND VA COLORS AS INDICATED AND IN ACCORDANCE WITH THE VA SIGNAGE DESIGN GUIDE. ALL OTHER COLORS SHALL BE PER MUTCD STANDARDS.
11. ALL SIGNAGE SHALL FOLLOW THE DETAILS OUTLINED IN THE VA SIGNAGE DESIGN MANUAL. SIGNAGE DETAILS SHOWN HEREIN ARE SHOWN FOR SPECIFIC DESIGN INTENT RELATED TO THIS PROJECT. CONTRACTOR SHALL VERIFY ALL ASPECTS OF SIGNAGE WITH THE VA PRIOR TO FABRICATION. REFER TO VA SIGNAGE PG-18-10 DESIGN MANUAL FOR ADDITIONAL DETAILS, MATERIALS, INSTALLATION OF EACH SIGN TYPE. CONTACT THE ARCHITECT WHERE CONFLICTS OCCUR.
12. REFER TO CIVIL DRAWINGS FOR LOCATIONS OF SITE DIRECTORIES.
13. SEE AW611 FOR MOUNTING DETAILS.

8 SIGN S37
1"=1'-0"

ISSUE FOR BID	08-09-2024
Revisions:	Date:

CONSULTANT

ARCHITECT/ENGINEER OF RECORD

BANCROFT ARCHITECTS + ENGINEERS
3300 Dundee Rd.
Northbrook, IL 60062
T: 847.952.9362
www. bancroft-ae.com

STAMP

LICENSED ARCHITECT
CHRISTOPHER J. ZAMBELLI
No. 401.001.0
STATE OF NEW YORK

Office of Construction and Facilities Management

VA U.S. Department of Veterans Affairs

Drawing Title: ARCHITECTURAL- WAYFINDING SIGN DETAILS	Phase: ISSUE FOR BID	Project Title: PARKING RAMP EXPANSION	Project Number: 528-18-375
			Building Number: 29
Approved: Project Director		Location: 3495 BAILEY AVE., BUFFALO, NY 14215	Drawing Number: AW603
		Issue Date: 08-09-2024 / Checked: CZ / Drawn: CG	

K:\CDG_PROJECTS\2021\21-113 - Parking Ramp (Buffalo, NY)\400- Des\Docs\402- Drawings\WORKING\21-113_AW603.dwg
6/14/2009 12:39:03 PM
21-113_AW603.dwg
1/15/2004
VA FORM 08 - 6231

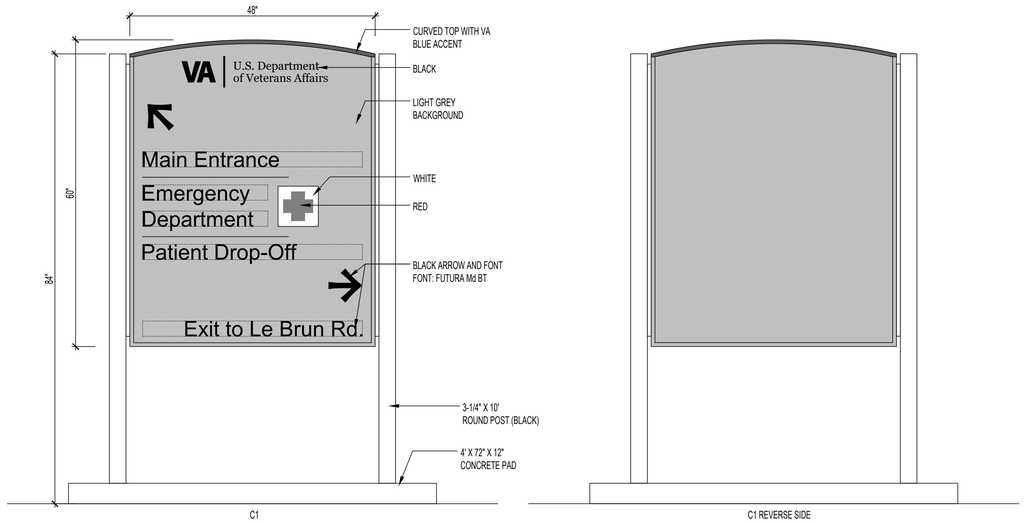

1 SIGN C1
1"=1'-0"

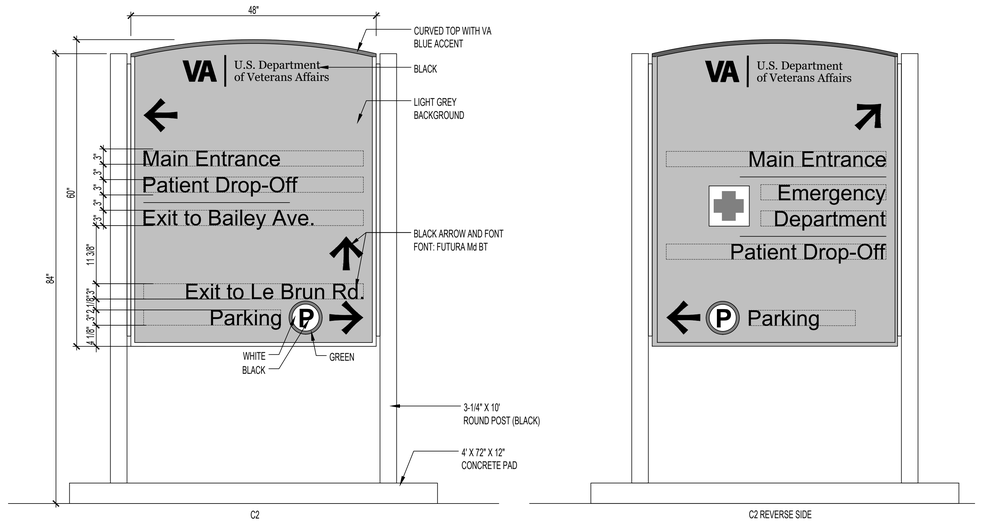

2 SIGN C2
1"=1'-0"

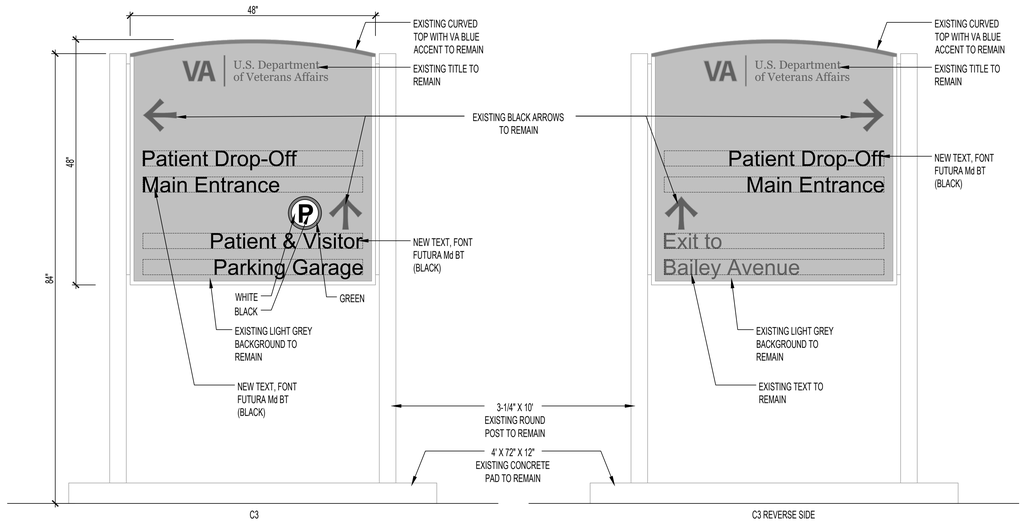

3 SIGN C3
1"=1'-0"

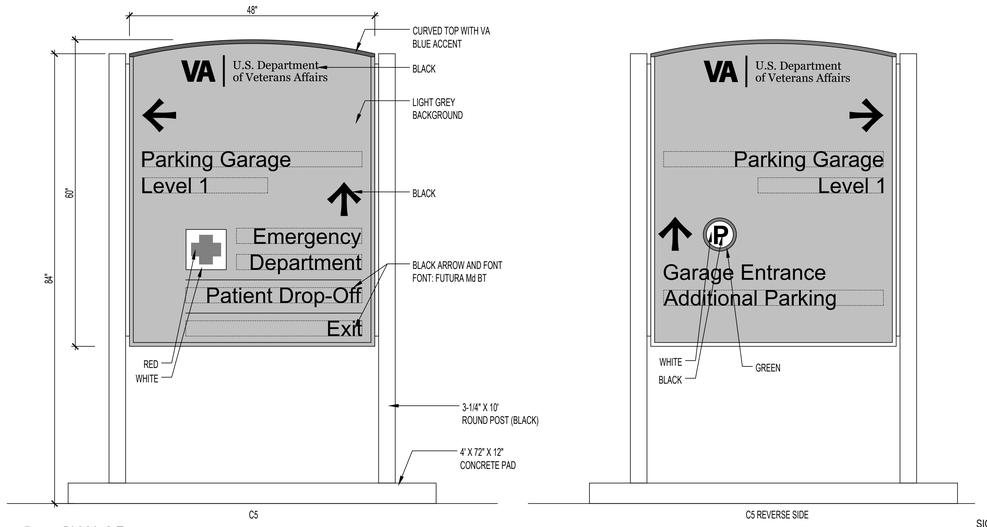

4 SIGN C5
1"=1'-0"

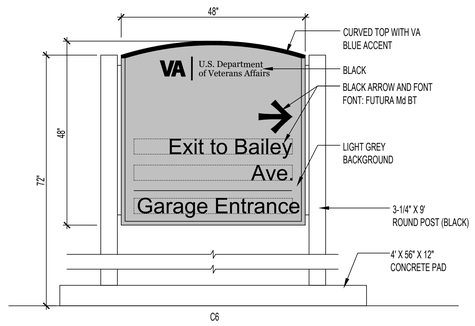

5 SIGN C6
1"=1'-0"

SIGNAGE (EXTEIROR CIVIL NOTES)

1. EXISTING SIGNS SHOWN FOR REFERENCE. CONTRACTOR TO REUSE OR TURN OVER AS NOTED ON CIVIL DRAWING C100.

SIGNAGE GENERAL NOTES

1. SIGN MOUNTING HEIGHT TO BE 2" ABOVE BOTTOM OF BEAMS LEVEL UNLESS NOTED OTHERWISE.
2. SIGN CONTRACTOR SHALL REVIEW SIGN LOCATIONS PRIOR TO INSTALLATION WITH VACOTR TO COORDINATE WITH LIGHTING SYSTEM.
3. SIGNS SHALL BE MOUNTED LEVEL AND PLUMB, UNLESS NOTED OTHERWISE.
4. WHERE TWO (2) SIGNS ARE MOUNTED BACK TO BACK, SMALLEST L DIMENSION SHALL INCREASE TO MATCH LARGEST L DIMENSION.
5. MAXIMUM BOLT INSERT EMBEDMENT LENGTH 1-1/4", UNLESS NOTED OTHERWISE.
6. DO NOT SCALE DRAWINGS.
7. BACKS AND EDGES OF ALL ALUMINUM SIGNS MOUNTED DIRECTLY TO STRUCTURE SHALL BE PAINTED (SIGN BACKGROUND COLOR) TO PREVENT CATHODIC REACTION.
8. SEE AW100 SERIES DRAWINGS FOR SIGN LOCATIONS.
9. ALL FONTS HELVETICA MEDIUM U.N.O.
10. USE LEVEL COLORS AND VA COLORS AS INDICATED AND IN ACCORDANCE WITH THE VA SIGNAGE DESIGN GUIDE. ALL OTHER COLORS SHALL BE PER MUTCD STANDARDS.
11. ALL SIGNAGE SHALL FOLLOW THE DETAILS OUTLINED IN THE VA SIGNAGE DESIGN MANUAL. SIGNAGE DETAILS SHOWN HEREIN ARE SHOWN FOR SPECIFIC DESIGN INTENT RELATED TO THIS PROJECT. CONTRACTOR SHALL VERIFY ALL ASPECTS OF SIGNAGE WITH THE VA PRIOR TO FABRICATION. REFER TO VA SIGNAGE PG-18-10 DESIGN MANUAL FOR ADDITIONAL DETAILS, MATERIALS, INSTALLATION OF EACH SIGN TYPE. CONTACT THE ARCHITECT WHERE CONFLICTS OCCUR.
12. REFER TO CIVIL DRAWINGS FOR LOCATIONS OF SITE DIRECTORIES.
13. SEE AW611 FOR MOUNTING DETAILS.

ISSUE FOR BID	08-09-2024
Revisions:	Date:

CONSULTANT

ARCHITECT/ENGINEER OF RECORD

3300 Dundee Rd.
Northbrook, IL 60062
T: 847.952.9362
www.bancroft-ae.com
BANCROFT ARCHITECTS + ENGINEERS

STAMP

REGISTERED ARCHITECT CHRISTIAN G. ZAVARELLA 401029236 STATE OF ILLINOIS

Office of Construction and Facilities Management

VA | U.S. Department of Veterans Affairs

Drawing Title: ARCHITECTURAL- WAYFINDING EXTERIOR SIGN DETAILS	Phase: ISSUE FOR BID	Project Title: PARKING RAMP EXPANSION	Project Number: 528-18-375
			Building Number: 29
Approved: Project Director		Location: 3495 BAILEY AVE., BUFFALO, NY 14215	Drawing Number: AW604
		Issue Date: 08-09-2024 / Checked: CZ / Drawn: CG	

K:\CCG_PROJECTS\2021\21-113 - Parking Ramp (Buffalo, NY)\400- DwtDocs\402- Drawings\WORKING\21-113_AW604.dwg
6/14/2009 12:39:03 PM
21-113_AW604.dwg
1/15/2004
VA FORM 08 - 6231

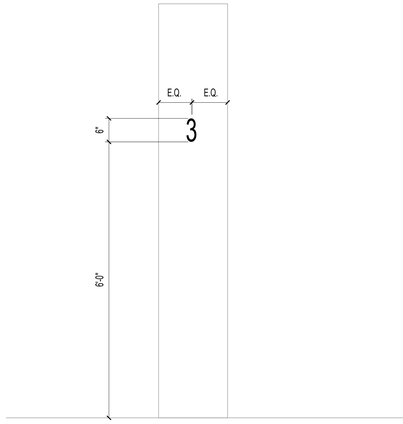

3 PARKING DECK CROSSWALK

3/4"=1'-0"

0 1/2" 1' 2' 3'

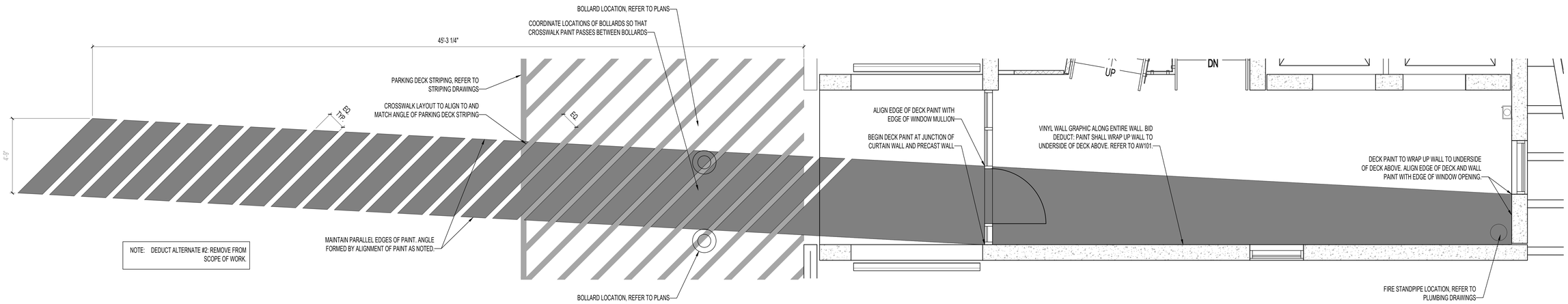

2 PARKING DECK CROSSWALK

3/8"=1'-0"

0 1' 2' 4' 6'

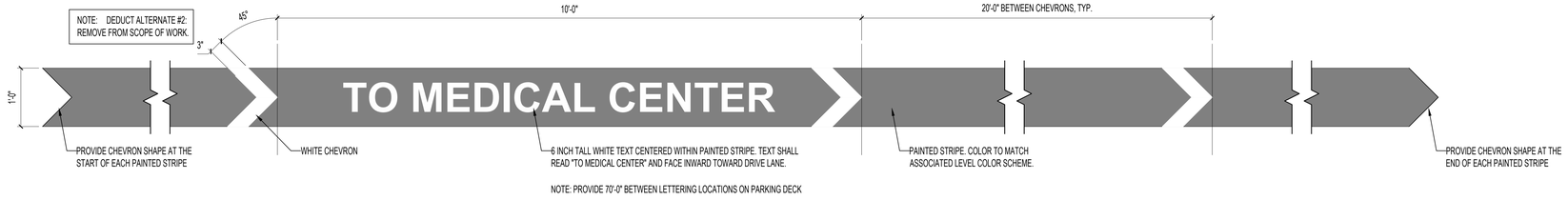

1 PARKING DECK STRIPE, CHEVRONS, LETTERING

1"=1'-0"

0 1/2" 1' 2'

SIGNAGE GENERAL NOTES

1. SIGN MOUNTING HEIGHT TO BE 2" ABOVE BOTTOM OF BEAMS LEVEL UNLESS NOTED OTHERWISE.
2. SIGN CONTRACTOR SHALL REVIEW SIGN LOCATIONS PRIOR TO INSTALLATION WITH VACOTR TO COORDINATE WITH LIGHTING SYSTEM.
3. SIGNS SHALL BE MOUNTED LEVEL AND PLUMB, UNLESS NOTED OTHERWISE.
4. WHERE TWO (2) SIGNS ARE MOUNTED BACK TO BACK, SMALLEST L DIMENSION SHALL INCREASE TO MATCH LARGEST L DIMENSION.
5. MAXIMUM BOLT INSERT EMBEDMENT LENGTH 1-1/4", UNLESS NOTED OTHERWISE.
6. DO NOT SCALE DRAWINGS.
7. BACKS AND EDGES OF ALL ALUMINUM SIGNS MOUNTED DIRECTLY TO STRUCTURE SHALL BE PAINTED (SIGN BACKGROUND COLOR) TO PREVENT CATHODIC REACTION.
8. SEE AW100 SERIES DRAWINGS FOR SIGN LOCATIONS.
9. ALL FONTS HELVETICA MEDIUM U.N.O.
10. USE LEVEL COLORS AND VA COLORS AS INDICATED AND IN ACCORDANCE WITH THE VA SIGNAGE DESIGN GUIDE. ALL OTHER COLORS SHALL BE PER MUTCD STANDARDS.
11. ALL SIGNAGE SHALL FOLLOW THE DETAILS OUTLINED IN THE VA SIGNAGE DESIGN MANUAL. SIGNAGE DETAILS SHOWN HEREIN ARE SHOWN FOR SPECIFIC DESIGN INTENT RELATED TO THIS PROJECT. CONTRACTOR SHALL VERIFY ALL ASPECTS OF SIGNAGE WITH THE VA PRIOR TO FABRICATION. REFER TO VA SIGNAGE PC-18-10 DESIGN MANUAL FOR ADDITIONAL DETAILS, MATERIALS, INSTALLATION OF EACH SIGN TYPE. CONTACT THE ARCHITECT WHERE CONFLICTS OCCUR.
12. REFER TO CIVIL DRAWINGS FOR LOCATIONS OF SITE DIRECTORIES.
13. SEE AW611 FOR MOUNTING DETAILS.

ISSUE FOR BID	08-09-2024
Revisions:	Date:

CONSULTANT

ARCHITECT/ENGINEER OF RECORD

3300 Dundee Rd.
Northbrook, IL 60062
T: 847.952.9362
www.bancroft-ae.com
BANCROFT ARCHITECTS + ENGINEERS

STAMP

LICENSED ARCHITECT CACHIN D. ZHANG 06/12/24 REGISTERED STATE OF NEW YORK

Office of Construction and Facilities Management

VA U.S. Department of Veterans Affairs

Drawing Title: ARCHITECTURAL- WAYFINDING PARKING DECK DETAILS	Phase: ISSUE FOR BID	Project Title: PARKING RAMP EXPANSION	Project Number: 528-18-375
			Building Number: 29
Approved: Project Director		Location: 3495 BAILEY AVE., BUFFALO, NY 14215	Drawing Number: AW605
		Issue Date: 08-09-2024 / Checked: CZ / Drawn: RB	

K:\CDCG_PROJECTS\2021\21-113 - Parking Ramp (Buffalo, NY)\400- Dev\Docs\402- Drawings\WORKING\21-113_AW605.dwg
6/14/2009 12:39:03 PM
21-113_AW605.dwg
1/15/2004
VA FORM 08 - 6231

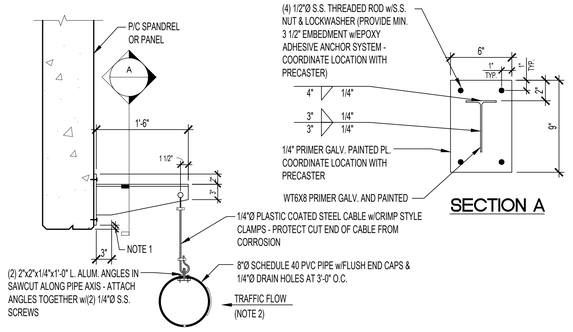

SECTION A

1 MOUNTING DETAIL
1"=1'-0"

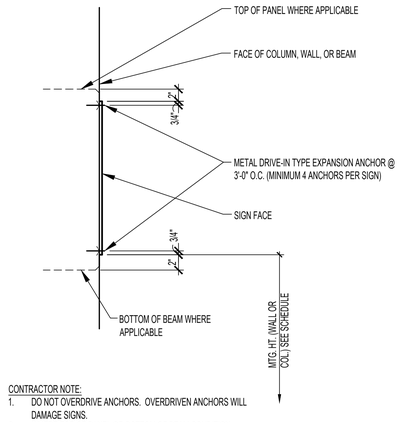

CONTRACTOR NOTE:
1. DO NOT OVERDRIVE ANCHORS. OVERDRIVEN ANCHORS WILL DAMAGE SIGNS.
2. WHERE TOP OF PANEL OR BOTTOM OF BEAM CONDITION OCCURS; MAINTAIN A CONSTANT 2" DIMENSION FROM TOP OF PANEL OR BOTTOM OF BEAM TO SIGN AS SHOWN.

2 MOUNTING DETAIL
1"=1'-0"

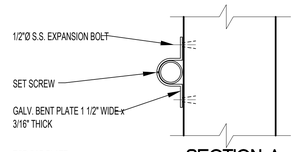

SECTION A

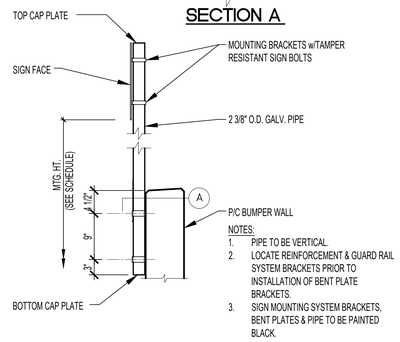

NOTES:
1. PIPE TO BE VERTICAL.
2. LOCATE REINFORCEMENT & GUARD RAIL SYSTEM BRACKETS PRIOR TO INSTALLATION OF BENT PLATE BRACKETS.
3. SIGN MOUNTING SYSTEM BRACKETS, BENT PLATES & PIPE TO BE PAINTED BLACK.

3 MOUNTING DETAIL
1"=1'-0"

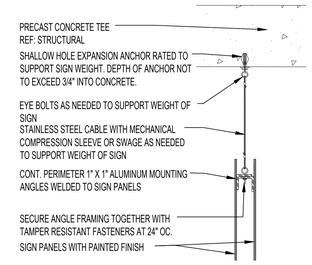

NOTE: ALL HARDWARE SHALL BE CORROSION RESISTANT

4 MOUNTING DETAIL
1"=1'-0"

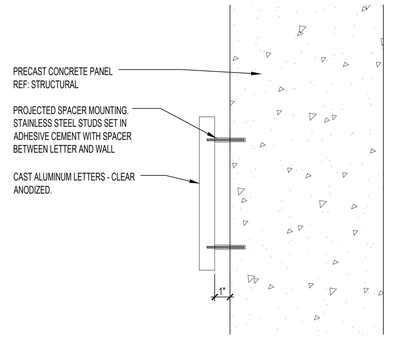

5 MOUNTING DETAIL
1"=1'-0"

NOTE: ALL HARDWARE SHALL BE CORROSION RESISTANT

6 MOUNTING DETAIL
1"=1'-0"

CONTRACTOR NOTE:
1. DO NOT OVERDRIVE ANCHORS. OVERDRIVEN ANCHORS WILL DAMAGE SIGNS.

7 MOUNTING DETAIL
1"=1'-0"

ISSUE FOR BID	08-09-2024
Revisions:	Date:

CONSULTANT

ARCHITECT/ENGINEER OF RECORD

BANCROFT ARCHITECTS + ENGINEERS
3300 Dundee Rd.
Northbrook, IL 60062
T: 847.952.9362
www.bancroft-ae.com

STAMP

LICENSED ARCHITECT CROTON D. PARRIS 001.028284 STATE OF ILLINOIS

Office of Construction and Facilities Management

VA U.S. Department of Veterans Affairs

Drawing Title: ARCHITECTURAL- WAYFINDING SIGN DETAILS

Approved: Project Director

Phase: ISSUE FOR BID

Project Title: PARKING RAMP EXPANSION

Location: 3495 BAILEY AVE., BUFFALO, NY 14215

Issue Date: 08-09-2024

Checked: CZ

Drawn: CG

Project Number: 528-18-375

Building Number: 29

Drawing Number: AW611

VA FORM 08 - 6231

6/14/2209 12:39:03 PM

K:\CCG_PROJECTS\2021\21-113 - Parking Ramp (Buffalo, NY)\400- DesiDocs\402- Drawings\WORKING\21-113_AW611.dwg

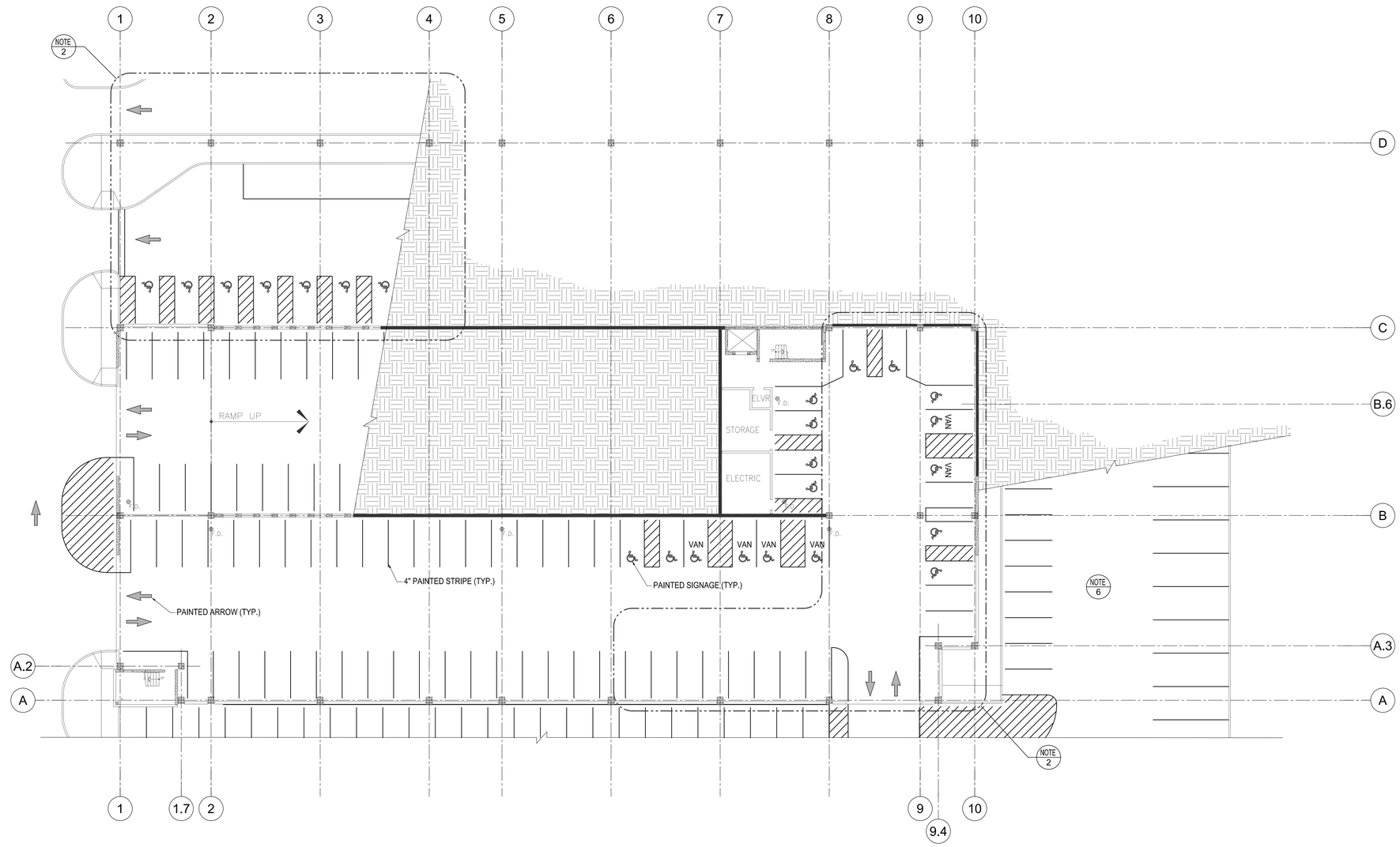

N

1 EXISTING LEVEL 1 STRIPING PLAN

SCALE: 1/16"=1'-0"

0 4 8 16 32

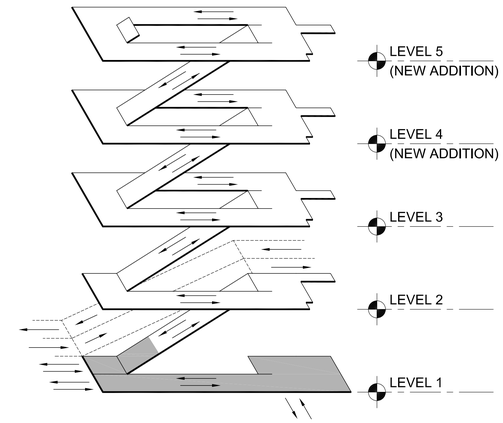

PHASE 1
ISOMETRIC DIAGRAM

SCALE: NONE

DRAWING NOTES

1. PROVIDE TEMPORARY STRIPING AND SIGNAGE IF RESTORATION WORK COMPROMISES PARKING OPERATIONS PRIOR TO NEW WORK.
2. COMPLETELY REMOVE ALL EXISTING PAINTED STRIPING AND SIGNAGE IN DESIGNATED AREAS ON PLAN THIS SHEET.
3. ENTIRE GARAGE WILL BE RESTRIPED AS PART OF THE NEW WORK, CLEAN OR REMOVE ALL EXISTING PAINTED STRIPING AND SIGNAGE PRIOR TO INSTALLATION OF PERMANENT NEW STRIPING AND SIGNAGE IN ORDER TO COMPLY WITH TRAFFIC MARKING PAINT MANUFACTURER'S SUBSTRATE REQUIREMENTS.
4. SEE DRAWING AJ501 FOR TYPICAL DETAILS AND SCHEDULE OF PAINT COLORS.
5. SEE SECTION 09 91 00 FOR ADDITIONAL INFORMATION.
6. SEE CIVIL DRAWINGS FOR AREAS OUTSIDE OF BUILDING FOOTPRINT.

PARKING SUMMARY CHART
EXISTING LAYOUT

LEVEL	STANDARD	HC STD.	HC VAN	TOTAL
SOUTH LOT	126	0	0	126
EAST LOT	29	0	0	29
HC AT DROP-OFF	0	18	0	18
LEVEL 1	66	11	6	83
LEVEL 2	96	12	0	108
LEVEL 3 (ROOF)	137	18	0	155
GRAND TOTAL	454	59	6	519

NOTE: PERCENT OF HC PARKING = 12.52%

ISSUE FOR BID	08-09-2024
Revisions:	Date:

CONSULTANT

DESMAN

ARCHITECT/ENGINEER OF RECORD

BANCROFT ARCHITECTS + ENGINEERS
3300 Dundee Rd.
Northbrook, IL 60062
T: 847.952.9362
www. bancroft-ae.com

STAMP

LICENSED ARCHITECT 36124 CHRISTINE M. BANCROFT ANNUAL 07/31/2025 STATE OF ILLINOIS

Office of Construction and Facilities Management

VA U.S. Department of Veterans Affairs

Drawing Title: ARCHITECTURAL - LEVEL 1 STRIPING PLAN-EXISTING	Phase: ISSUE FOR BID	Project Title: PARKING RAMP EXPANSION	Project Number: 528-18-375
Approved: Project Director		Location: 3495 BAILEY AVE., BUFFALO, NY 14215	Building Number: 29
		Issue Date: 08-09-2024 / Checked / Drawn	Drawing Number: AJ121

6/14/2009 12:39:03 PM

N:\50-21163-Buffalo VAMC\Dwgs\CD\AJ121 ARCHITECTURAL - LEVEL 1 STRIPING PLAN - EXISTING.dwg

VA FORM 08 - 6231

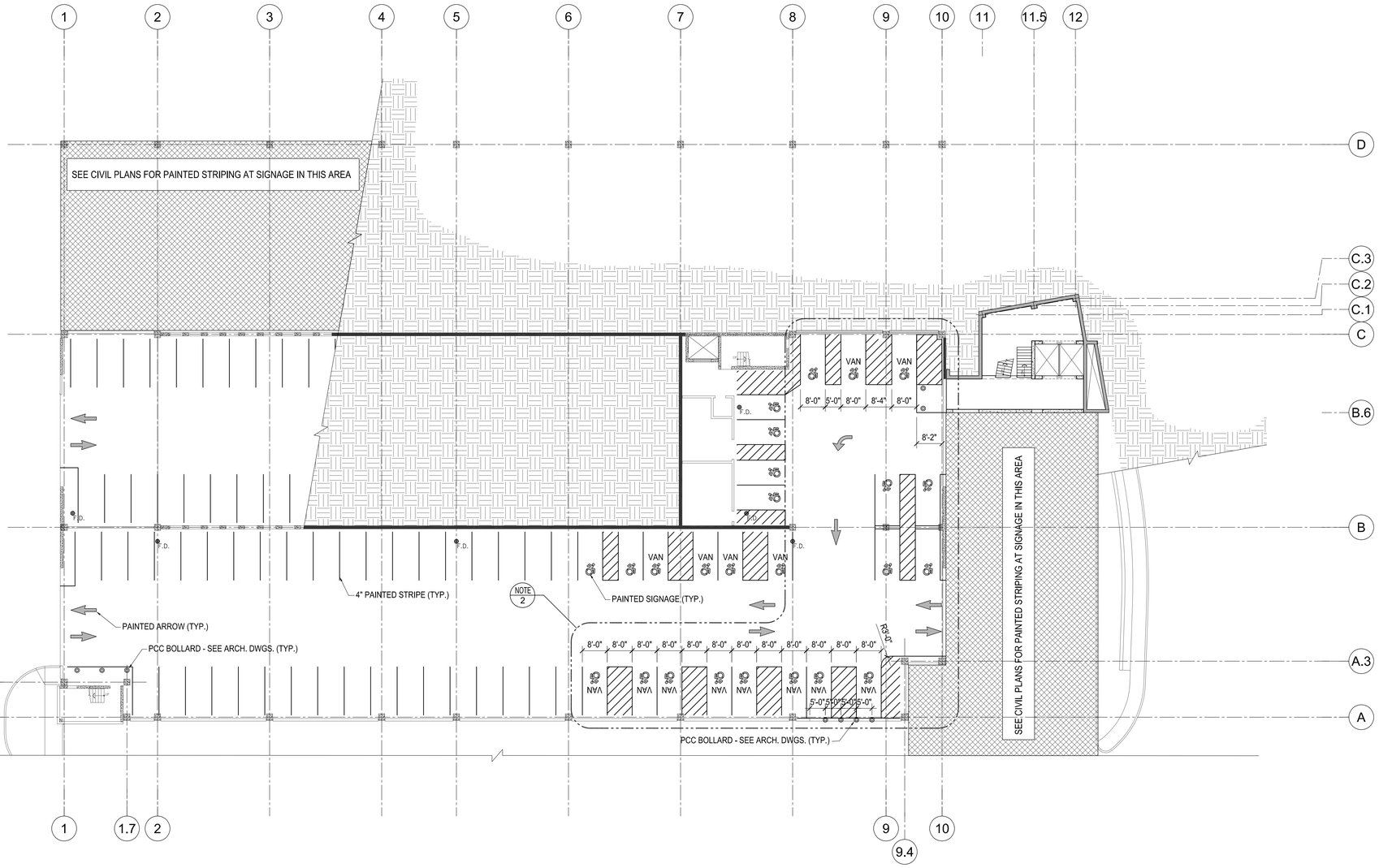

N

1 LEVEL 1 STRIPING PLAN

SCALE: 1/16"=1'-0"

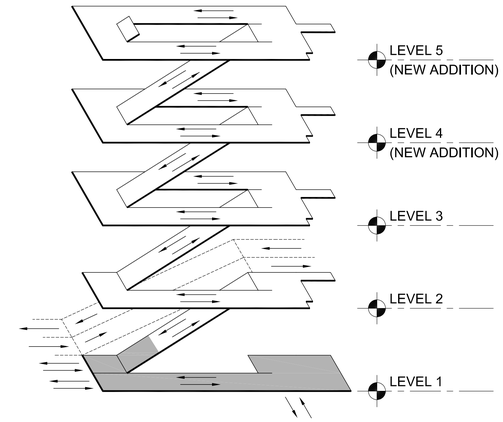

PHASE 1
ISOMETRIC DIAGRAM

SCALE: NONE

DRAWING NOTES

1. REPLACE ALL EXISING PAINTED STALL STRIPING AND PAINTED SIGNAGE U.N.O.
2. INSTALL NEW PAINTED STRIPING AND SIGNAGE LAYOUT AS INDICATED IN DESIGNATED AREAS ON PLAN THIS SHEET.
3. SEE DRAWING AJ501 FOR TYPICAL DETAILS AND SCHEDULE OF PAINT COLORS.
4. SEE SECTION 09 91 00 FOR ADDITIONAL INFORMATION.
5. SEE CIVIL DRAWINGS FOR ALL WORK OUTSIDE OF THE BUILDING FOOTPRINT.

PARKING SUMMARY CHART
FINAL PROPOSED

LEVEL	STANDARD	HC STD.	HC VAN	TOTAL	EXISTING	NET ADD
SOUTH LOT	130	0	0	130	126	4
EAST LOT	0	0	0	0	29	(-29)
HC AT DROP-OFF	0	6	6	12	18	(-6)
LEVEL 1	67	11	14	92	83	9
LEVEL 2	95	10	2	107	108	-1
LEVEL 3	137	19	2	158	155	3
LEVEL 4	136	19	2	157	N/A	157
LEVEL 5 (ROOF)	135	19	2	156	N/A	156
GRAND TOTAL	700	84	28	812	519	293

NOTE: PERCENT OF HC PARKING = 13.79%; 1:6 VAN = 19 (+9 SURPLUS).

ISSUE FOR BID	08-09-2024
Revisions:	Date:

CONSULTANT

DESMAN

ARCHITECT/ENGINEER OF RECORD

BANCROFT ARCHITECTS + ENGINEERS
3300 Dundee Rd.
Northbrook, IL 60062
T: 847.952.9362
www. bancroft-ae.com

STAMP

LICENSED ARCHITECT
07/24
CHRISTIAN D. BANCROFT
001.022.2024
STATE OF ILLINOIS

Office of Construction and Facilities Management

VA U.S. Department of Veterans Affairs

Drawing Title: ARCHITECTURAL - LEVEL 1 STRIPING PLAN

Phase: ISSUE FOR BID

Approved: Project Director

Project Title: PARKING RAMP EXPANSION

Project Number: 528-18-375

Building Number: 29

Location: 3495 BAILEY AVE., BUFFALO, NY 14215

Issue Date: 08-09-2024

Checked:

Drawn:

Drawing Number: AJ121.1

6/14/2009 12:39:03 PM

N:\50-21163-Buffalo VAMC\Dwgs\CD\AJ121-1 ARCHITECTURAL - LEVEL 1 STRIPING PLAN.dwg

VA FORM 08 - 6231

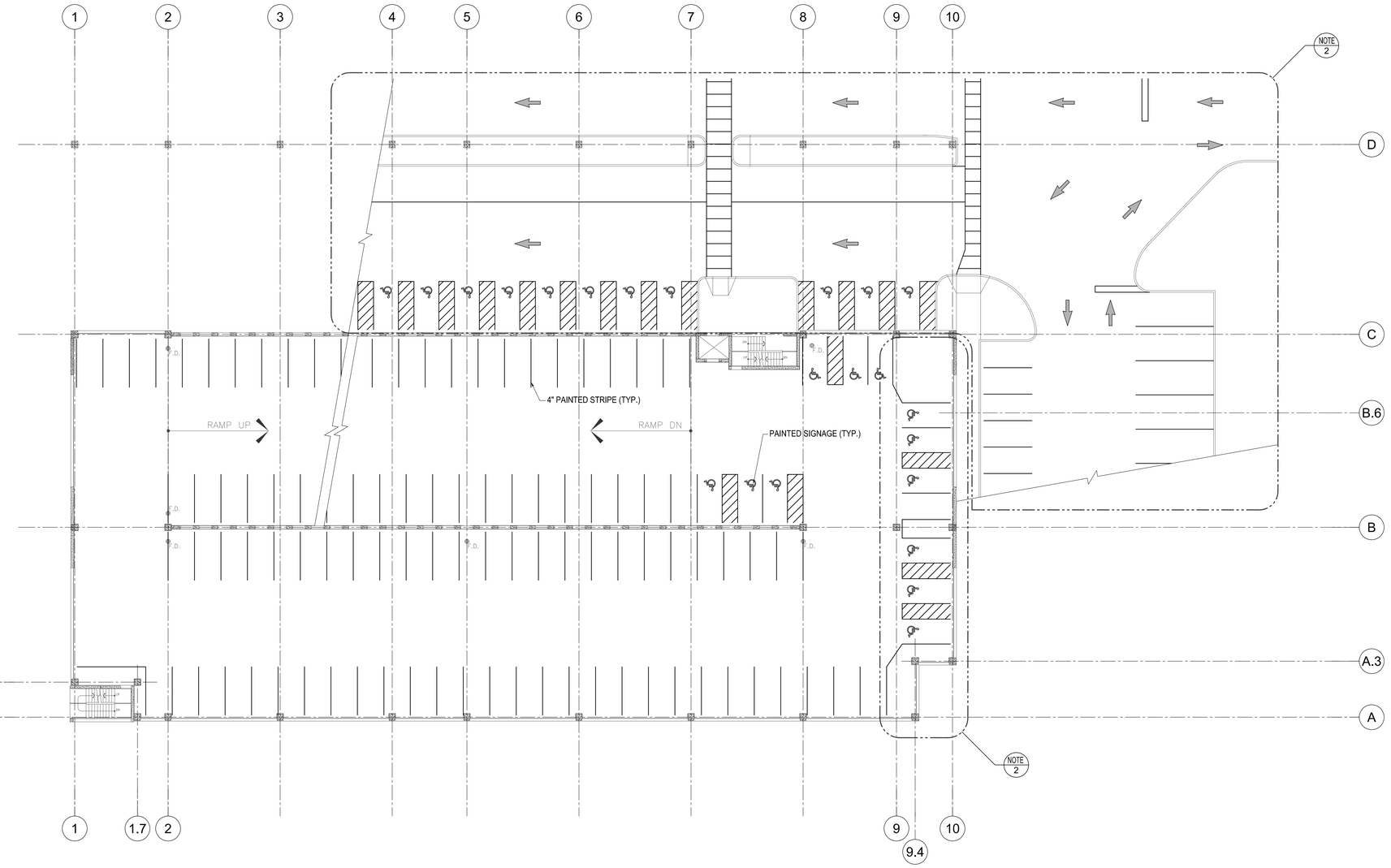

EXISTING
LEVEL 2 STRIPING PLAN
SCALE: 1/16"=1'-0"

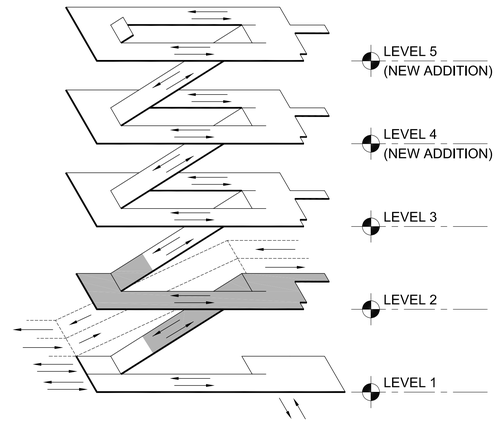

PHASE 1
ISOMETRIC DIAGRAM
SCALE: NONE

DRAWING NOTES

1. PROVIDE TEMPORARY STRIPING AND SIGNAGE IF RESTORATION WORK COMPROMISES PARKING OPERATIONS PRIOR TO NEW WORK.
6. SEE CIVIL DRAWINGS FOR THESE AREAS.
7. ENTIRE GARAGE WILL BE RESTRIPED AS PART OF THE NEW WORK, CLEAN OR REMOVE ALL EXISTING PAINTED STRIPING AND SIGNAGE PRIOR TO INSTALLATION OF PERMANENT NEW STRIPING AND SIGNAGE IN ORDER TO COMPLY WITH TRAFFIC MARKING PAINT MANUFACTURER'S SUBSTRATE REQUIREMENTS.
8. SEE DRAWING AJ501 FOR TYPICAL DETAILS AND SCHEDULE OF PAINT COLORS.
9. SEE SECTION 09 91 00 FOR ADDITIONAL INFORMATION.

PARKING SUMMARY CHART
EXISTING LAYOUT

LEVEL	STANDARD	HC STD.	HC VAN	TOTAL
SOUTH LOT	126	0	0	126
EAST LOT	29	0	0	29
HC AT DROP-OFF	0	18	0	18
LEVEL 1	66	11	6	83
LEVEL 2	96	12	0	108
LEVEL 3 (ROOF)	137	18	0	155
GRAND TOTAL	454	59	6	519

NOTE: PERCENT OF HC PARKING = 12.52%

ISSUE FOR BID	08-09-2024
Revisions:	Date:

CONSULTANT
DESMAN

ARCHITECT/ENGINEER OF RECORD
BANCROFT ARCHITECTS + ENGINEERS
3300 Dundee Rd.
Northbrook, IL 60062
T: 847.952.9362
www. bancroft-ae.com

STAMP
LICENSED ARCHITECT
STATE OF ILLINOIS

Office of Construction and Facilities Management
VA U.S. Department of Veterans Affairs

Drawing Title: ARCHITECTURAL - LEVEL 2 STRIPING PLAN-EXISTING
Approved: Project Director

Phase: ISSUE FOR BID

Project Title: PARKING RAMP EXPANSION
Location: 3495 BAILEY AVE., BUFFALO, NY 14215
Issue Date: 08-09-2024
Checked
Drawn

Project Number: 528-18-375
Building Number: 29
Drawing Number: AJ122

6/14/2009 12:39:03 PM
N:\50-21163-Buffalo VAMC\Dwgs\CD\AJ122 ARCHITECTURAL - LEVEL 2 STRIPING PLAN - EXISTING.dwg
VA FORM 08 - 6231

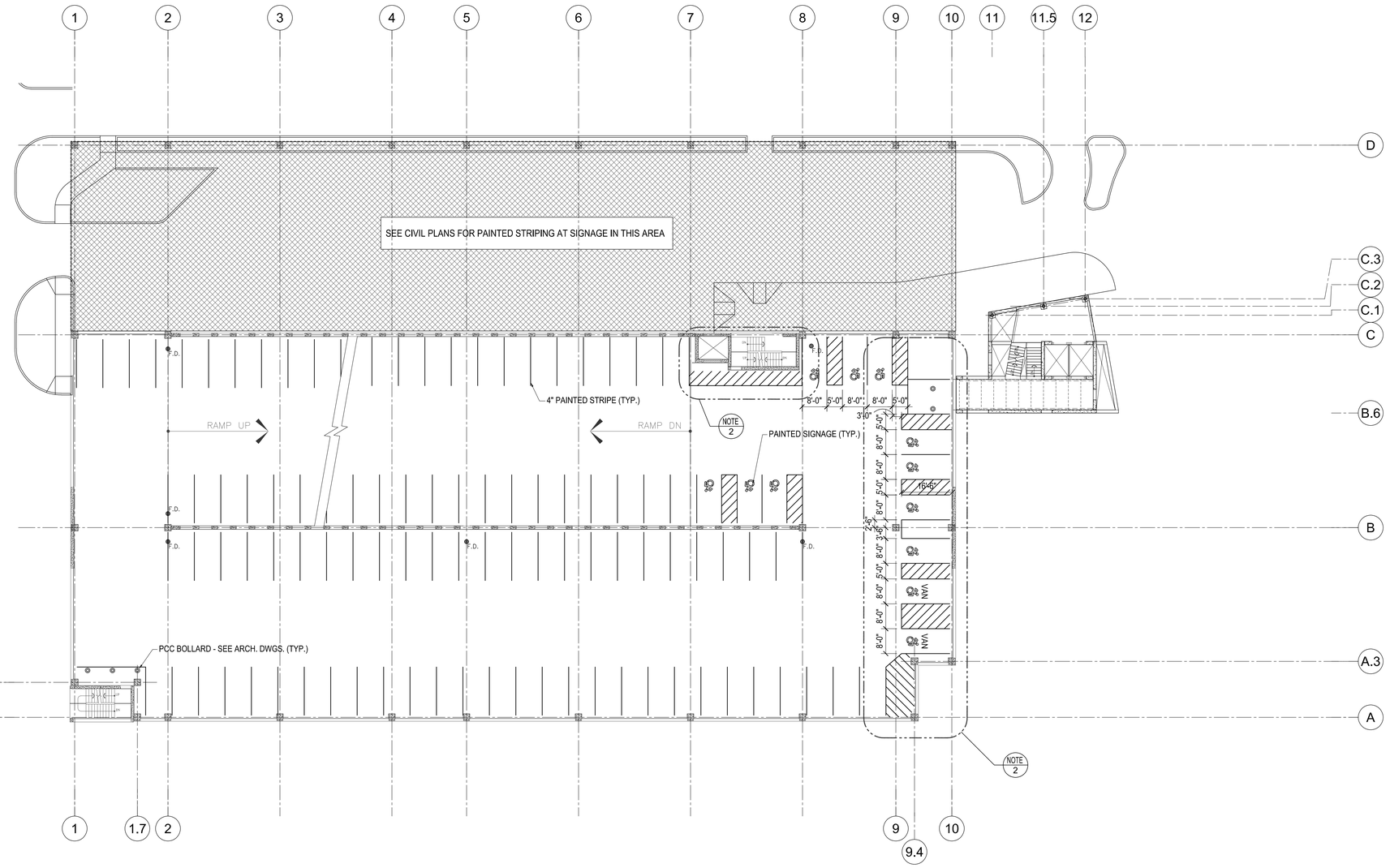

N

1 LEVEL 2 STRIPING PLAN

SCALE: 1/16"=1'-0"

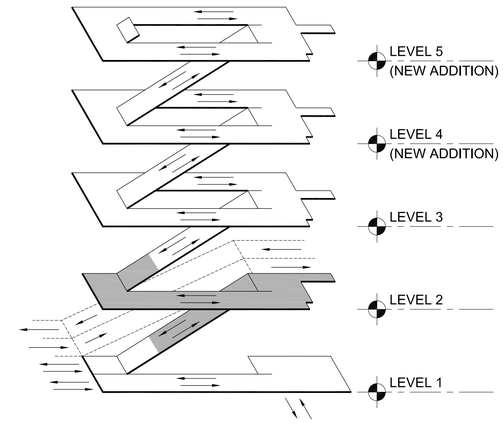

PHASE 1
ISOMETRIC DIAGRAM

SCALE: NONE

DRAWING NOTES

1. REPLACE ALL EXISING PAINTED STALL STRIPING AND PAINTED SIGNAGE U.N.O.
2. INSTALL NEW PAINTED STRIPING AND SIGNAGE LAYOUT AS INDICATED IN DESIGNATED AREAS ON PLAN THIS SHEET.
3. SEE DRAWING AJ501 FOR TYPICAL DETAILS AND SCHEDULE OF PAINT COLORS.
4. SEE SECTION 09 91 00 FOR ADDITIONAL INFORMATION.
5. SEE CIVIL DRAWINGS FOR ALL WORK OUTSIDE OF THE BUILDING FOOTPRINT.

PARKING SUMMARY CHART

FINAL PROPOSED

LEVEL	STANDARD	HC STD.	HC VAN	TOTAL	EXISTING	NET ADD
SOUTH LOT	130	0	0	130	126	4
EAST LOT	0	0	0	0	29	(-29)
HC AT DROP-OFF	0	6	6	12	18	(-6)
LEVEL 1	67	11	14	92	83	9
LEVEL 2	95	10	2	107	108	-1
LEVEL 3	137	19	2	158	155	3
LEVEL 4	136	19	2	157	N/A	157
LEVEL 5 (ROOF)	135	19	2	156	N/A	156
GRAND TOTAL	700	84	28	812	519	293

NOTE: PERCENT OF HC PARKING = 13.79%; 1:6 VAN = 19 (+9 SURPLUS).

ISSUE FOR BID	08-09-2024
Revisions:	Date:

CONSULTANT

DESMAN

ARCHITECT/ENGINEER OF RECORD

BANCROFT ARCHITECTS + ENGINEERS
3300 Dundee Rd.
Northbrook, IL 60062
T: 847.952.9362
www. bancroft-ae.com

STAMP

LICENSED ARCHITECT GACHA D. BANCROFT 001-018997 STATE OF ILLINOIS 08/14/24

Office of Construction and Facilities Management

VA U.S. Department of Veterans Affairs

Drawing Title	ARCHITECTURAL - LEVEL 2 STRIPING PLAN
Phase	ISSUE FOR BID
Project Title	PARKING RAMP EXPANSION
Project Number	528-18-375
Building Number	29
Location	3495 BAILEY AVE., BUFFALO, NY 14215
Drawing Number	AJ122.1
Approved: Project Director	
Issue Date	08-09-2024
Checked	
Drawn	

6/14/2009 12:39:03 PM

N:\50-21163-Buffalo VAMC\Dwgs\CD\AJ122-1 ARCHITECTURAL - LEVEL 2 STRIPING PLAN.dwg

VA FORM 08 - 6231

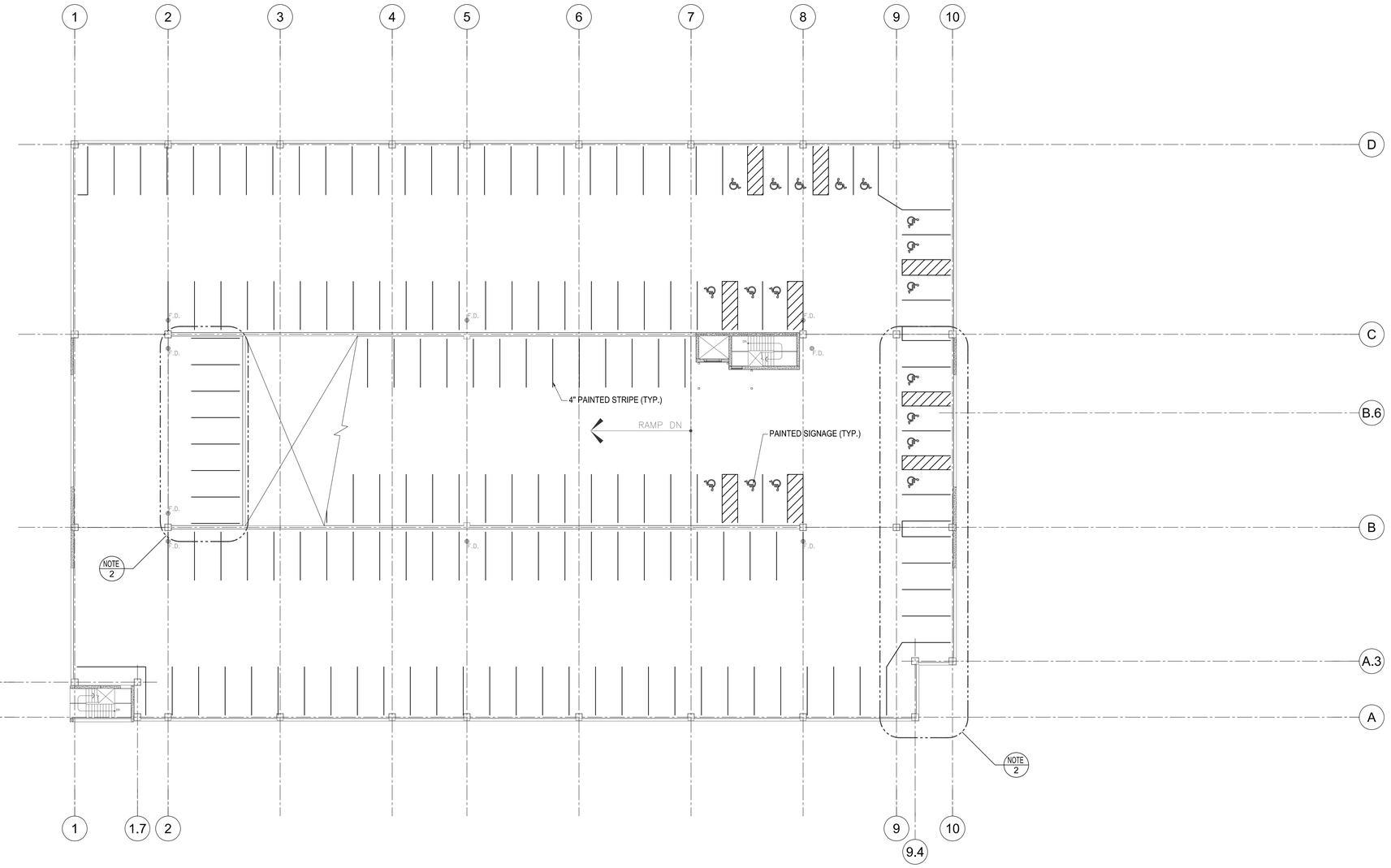

N

1 EXISTING LEVEL 3 STRIPING PLAN

SCALE: 1/16"=1'-0"

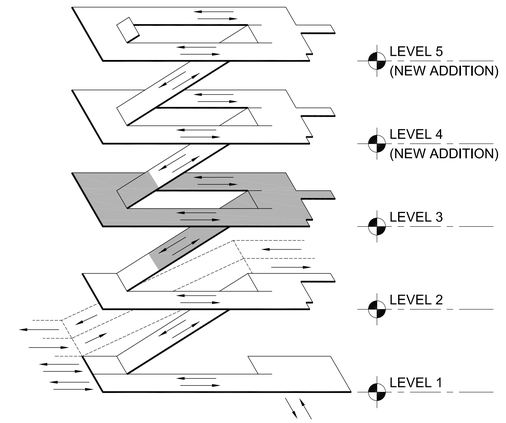

PHASE 1
ISOMETRIC DIAGRAM

SCALE: NONE

DRAWING NOTES

1. PROVIDE TEMPORARY STRIPING AND SIGNAGE IF RESTORATION WORK COMPROMISES PARKING OPERATIONS PRIOR TO NEW WORK.
2. COMPLETELY REMOVE ALL EXISTING PAINTED STRIPING AND SIGNAGE IN DESIGNATED AREAS ON PLAN THIS SHEET.
3. ENTIRE GARAGE WILL BE RESTRIPED AS PART OF THE NEW WORK, CLEAN OR REMOVE ALL EXISTING PAINTED STRIPING AND SIGNAGE PRIOR TO INSTALLATION OF PERMANENT NEW STRIPING AND SIGNAGE IN ORDER TO COMPLY WITH TRAFFIC MARKING PAINT MANUFACTURER'S SUBSTRATE REQUIREMENTS.
4. SEE DRAWING AJ501 FOR TYPICAL DETAILS AND SCHEDULE OF PAINT COLORS.
5. SEE SECTION 09 91 00 FOR ADDITIONAL INFORMATION.

PARKING SUMMARY CHART
EXISTING LAYOUT

LEVEL	STANDARD	HC STD.	HC VAN	TOTAL
SOUTH LOT	126	0	0	126
EAST LOT	29	0	0	29
HC AT DROP-OFF	0	18	0	18
LEVEL 1	66	11	6	83
LEVEL 2	96	12	0	108
LEVEL 3 (ROOF)	137	18	0	155
GRAND TOTAL	454	59	6	519

NOTE: PERCENT OF HC PARKING = 12.52%

ISSUE FOR BID	08-09-2024
Revisions:	Date:

CONSULTANT

DESMAN

ARCHITECT/ENGINEER OF RECORD

BANCROFT ARCHITECTS + ENGINEERS

3300 Dundee Rd.
Northbrook, IL 60062
T: 847.952.9362
www.bancroft-ae.com

STAMP

LICENSED ARCHITECT 36124 CHRISTINA M. BANCROFT 08/09/2024 STATE OF NEW YORK

Office of Construction and Facilities Management

VA U.S. Department of Veterans Affairs

Drawing Title	ARCHITECTURAL - LEVEL 3 STRIPING PLAN-EXISTING
Phase	ISSUE FOR BID
Project Title	PARKING RAMP EXPANSION
Project Number	528-18-375
Building Number	29
Location	3495 BAILEY AVE., BUFFALO, NY 14215
Drawing Number	AJ123
Approved: Project Director	
Issue Date	08-09-2024
Checked	
Drawn	

6/14/2009 12:39:03 PM

N:\50-21163-Buffalo VAMC\Dwgs\CD\AJ\123 ARCHITECTURAL - LEVEL 3 STRIPING PLAN - EXISTING.dwg

VA FORM 08 - 6231

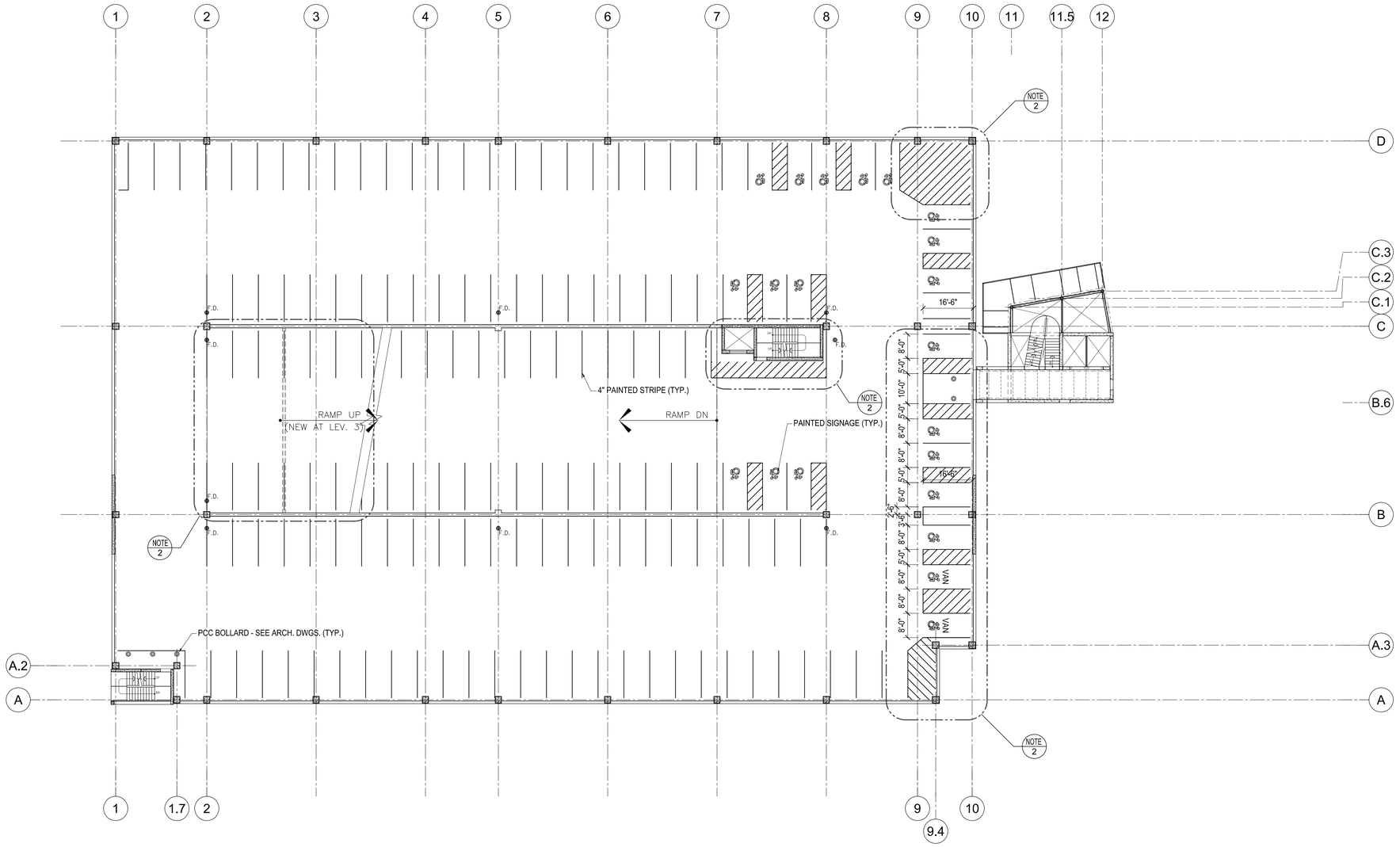

1 LEVEL 3 STRIPING PLAN
SCALE: 1/16"=1'-0"

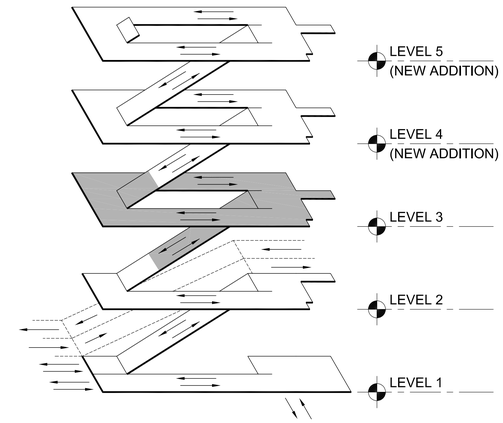

PHASE 1
ISOMETRIC DIAGRAM
SCALE: NONE

DRAWING NOTES

1. REPLACE ALL EXISING PAINTED STALL STRIPING AND PAINTED SIGNAGE U.N.O.
2. INSTALL NEW PAINTED STRIPING AND SIGNAGE LAYOUT AS INDICATED IN DESIGNATED AREAS ON PLAN THIS SHEET.
3. SEE DRAWING AJ501 FOR TYPICAL DETAILS AND SCHEDULE OF PAINT COLORS.
4. SEE SECTION 09 91 00 FOR ADDITIONAL INFORMATION.

PARKING SUMMARY CHART
FINAL PROPOSED

LEVEL	STANDARD	HC STD.	HC VAN	TOTAL	EXISTING	NET ADD
SOUTH LOT	130	0	0	130	126	4
EAST LOT	0	0	0	0	29	(-29)
HC AT DROP-OFF	0	6	6	12	18	(-6)
LEVEL 1	67	11	14	92	83	9
LEVEL 2	95	10	2	107	108	-1
LEVEL 3	137	19	2	158	155	3
LEVEL 4	136	19	2	157	N/A	157
LEVEL 5 (ROOF)	135	19	2	156	N/A	156
GRAND TOTAL	700	84	28	812	519	293

NOTE: PERCENT OF HC PARKING = 13.79%; 1:6 VAN = 19 (+9 SURPLUS).

ISSUE FOR BID	08-09-2024
Revisions:	Date:

CONSULTANT
DESMAN

ARCHITECT/ENGINEER OF RECORD
BANCROFT ARCHITECTS + ENGINEERS
3300 Dundee Rd.
Northbrook, IL 60062
T: 847.952.9362
www. bancroft-ae.com

STAMP
LICENSED ARCHITECT JACOB D. BANCROFT 001-019999 STATE OF ILLINOIS 08/09/24

Office of Construction and Facilities Management
VA U.S. Department of Veterans Affairs

Drawing Title: ARCHITECTURAL - LEVEL 3 STRIPING PLAN
Phase: ISSUE FOR BID
Project Title: PARKING RAMP EXPANSION
Project Number: 528-18-375
Building Number: 29
Location: 3495 BAILEY AVE., BUFFALO, NY 14215
Drawing Number: AJ123.1
Approved: Project Director
Issue Date: 08-09-2024
Checked:
Drawn:

6/14/2009 12:39:03 PM
N:\50-21163-Buffalo VAMC\Dwgs\CD\AJ123-1 ARCHITECTURAL - LEVEL 3 STRIPING PLAN.dwg

VA FORM 08 - 6231

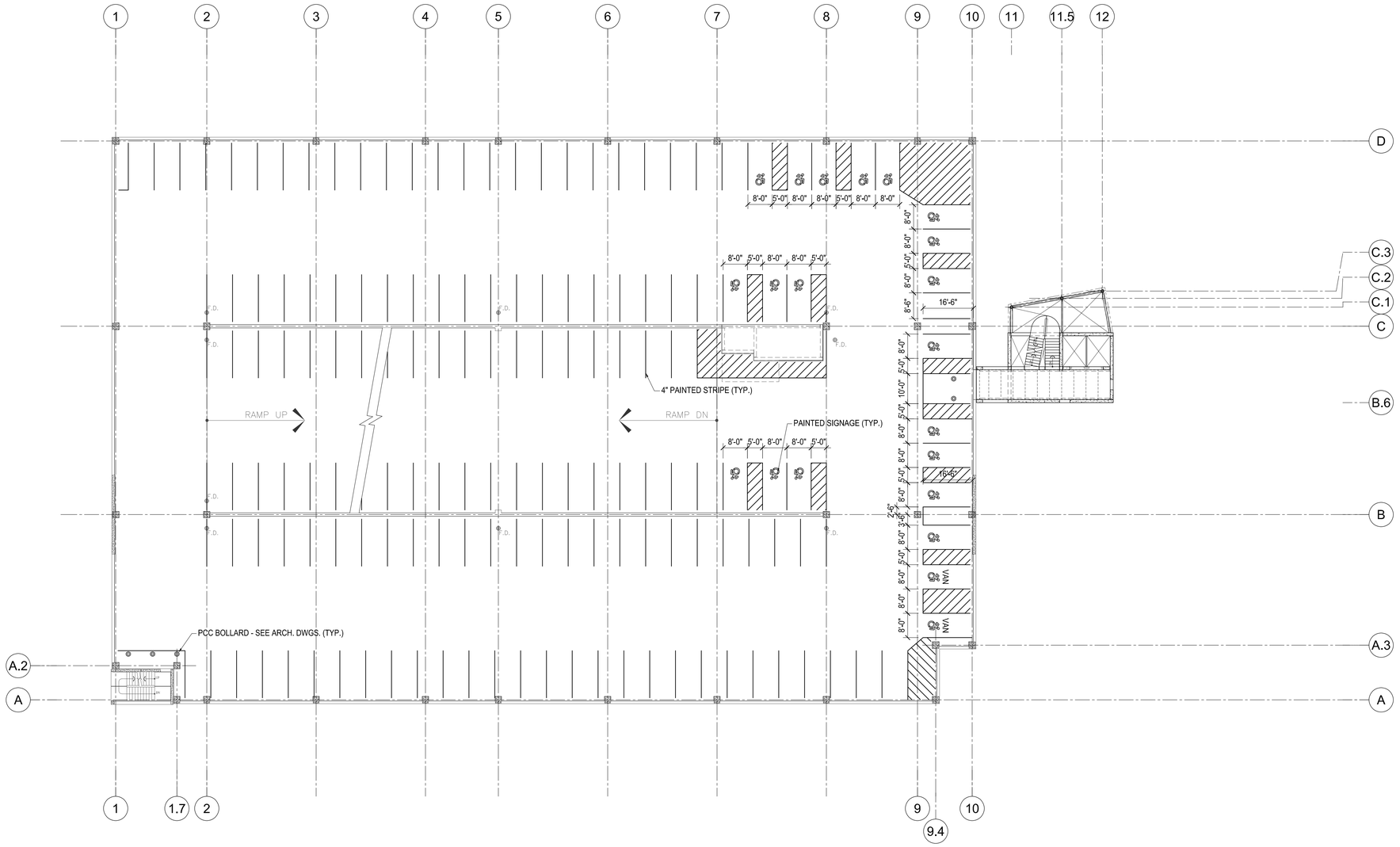

1 LEVEL 4 STRIPING PLAN
SCALE: 1/16"=1'-0"

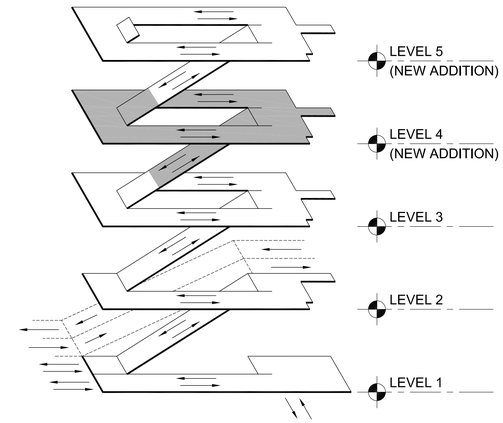

PHASE 1
ISOMETRIC DIAGRAM
SCALE: NONE

DRAWING NOTES

1. INSTALL NEW PAINTED STRIPING AND SIGNAGE LAYOUT AS INDICATED IN DESIGNATED AREAS ON PLAN THIS SHEET.
2. SEE DRAWING AJ501 FOR TYPICAL DETAILS AND SCHEDULE OF PAINT COLORS.
3. SEE SECTION 09 91 00 FOR ADDITIONAL INFORMATION.

PARKING SUMMARY CHART
FINAL PROPOSED

LEVEL	STANDARD	HC STD.	HC VAN	TOTAL	EXISTING	NET ADD
SOUTH LOT	130	0	0	130	126	4
EAST LOT	0	0	0	0	29	(-29)
HC AT DROP-OFF	0	6	6	12	18	(-6)
LEVEL 1	67	11	14	92	83	9
LEVEL 2	95	10	2	107	108	-1
LEVEL 3	137	19	2	158	155	3
LEVEL 4	136	19	2	157	N/A	157
LEVEL 5 (ROOF)	135	19	2	156	N/A	156
GRAND TOTAL	700	84	28	812	519	293

NOTE: PERCENT OF HC PARKING = 13.79%; 1:6 VAN = 19 (+9 SURPLUS).

ISSUE FOR BID	08-09-2024
Revisions:	Date:

CONSULTANT
DESMAN

ARCHITECT/ENGINEER OF RECORD
BANCROFT ARCHITECTS + ENGINEERS
3300 Dundee Rd.
Northbrook, IL 60062
T: 847.952.9362
www. bancroft-ae.com

STAMP
LICENSED ARCHITECT
STATE OF ILLINOIS

Office of Construction and Facilities Management
VA U.S. Department of Veterans Affairs

Drawing Title: ARCHITECTURAL - LEVEL 4 STRIPING PLAN
Approved: Project Director

Phase: ISSUE FOR BID

Project Title: PARKING RAMP EXPANSION
Location: 3495 BAILEY AVE., BUFFALO, NY 14215
Issue Date: 08-09-2024
Checked
Drawn

Project Number: 528-18-375
Building Number: 29
Drawing Number: AJ124.1

6/14/2009 12:39:03 PM
N:\50-21163-Buffalo VAMC\Dwgs\CD\AJ124-1 ARCHITECTURAL - LEVEL 4 STRIPING PLAN.dwg
VA FORM 08 - 6231

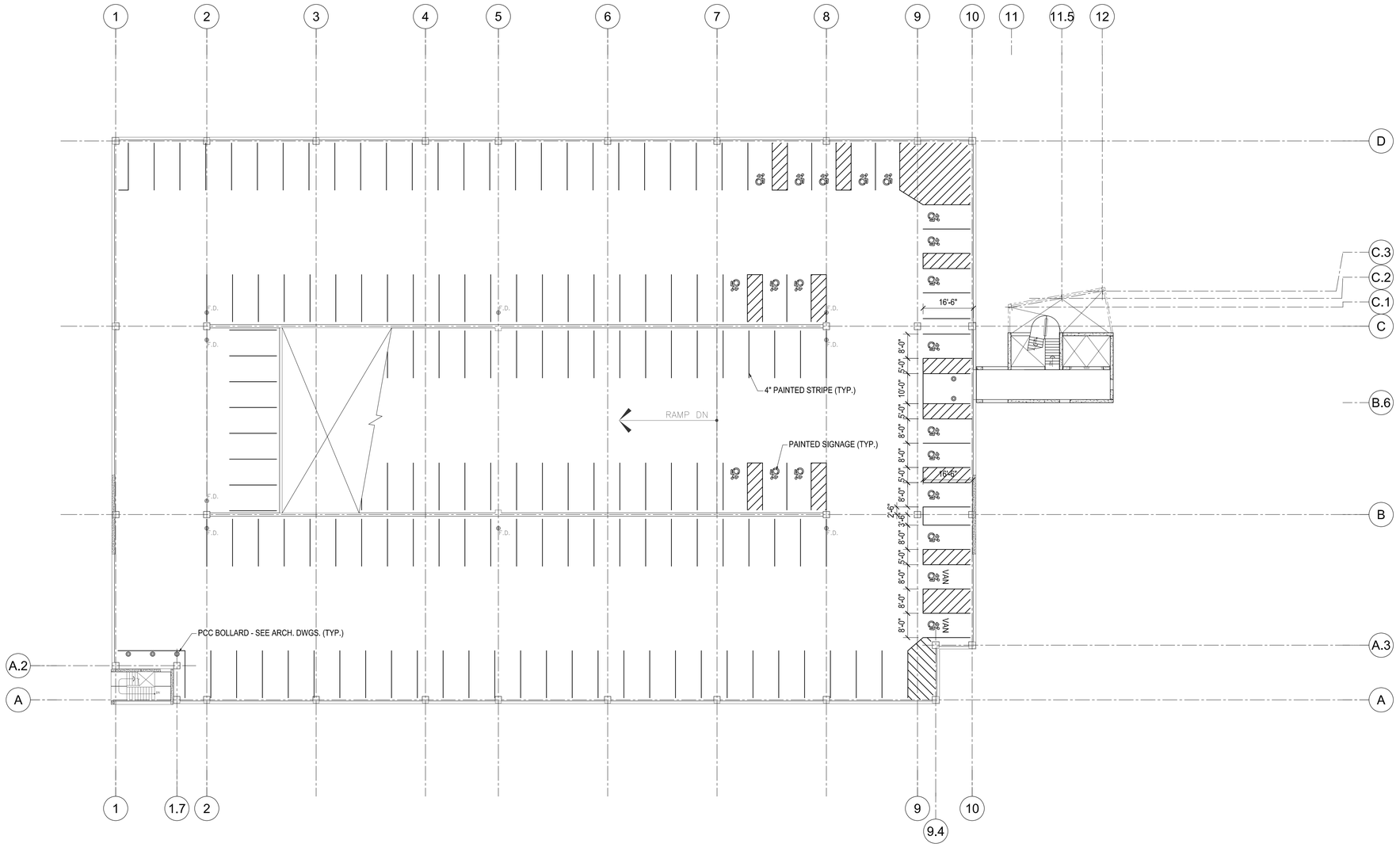

N

1 LEVEL 5 STRIPING PLAN

SCALE: 1/16"=1'-0"

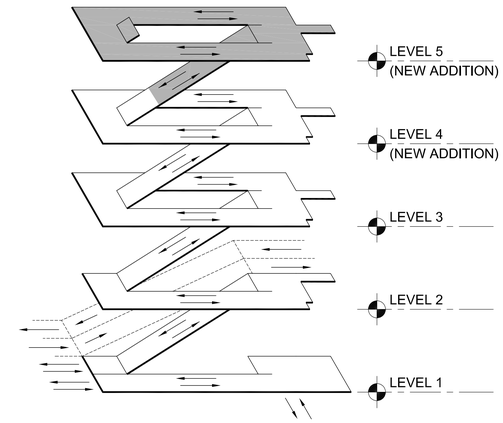

PHASE 1
ISOMETRIC DIAGRAM

SCALE: NONE

DRAWING NOTES

1. INSTALL NEW PAINTED STRIPING AND SIGNAGE LAYOUT AS INDICATED IN DESIGNATED AREAS ON PLAN THIS SHEET.
2. SEE DRAWING AJ501 FOR TYPICAL DETAILS AND SCHEDULE OF PAINT COLORS.
3. SEE SECTION 09 91 00 FOR ADDITIONAL INFORMATION.

PARKING SUMMARY CHART
FINAL PROPOSED

LEVEL	STANDARD	HC STD.	HC VAN	TOTAL	EXISTING	NET ADD
SOUTH LOT	130	0	0	130	126	4
EAST LOT	0	0	0	0	29	(-29)
HC AT DROP-OFF	0	6	6	12	18	(-6)
LEVEL 1	67	11	14	92	83	9
LEVEL 2	95	10	2	107	108	-1
LEVEL 3	137	19	2	158	155	3
LEVEL 4	136	19	2	157	N/A	157
LEVEL 5 (ROOF)	135	19	2	156	N/A	156
GRAND TOTAL	700	84	28	812	519	293

NOTE: PERCENT OF HC PARKING = 13.79%; 1:6 VAN = 19 (+9 SURPLUS).

ISSUE FOR BID	08-09-2024
Revisions:	Date:

CONSULTANT

DESMAN

ARCHITECT/ENGINEER OF RECORD

BANCROFT ARCHITECTS + ENGINEERS
3300 Dundee Rd.
Northbrook, IL 60062
T: 847.952.9362
www. bancroft-ae.com

STAMP

LICENSED ARCHITECT JACOB D. BANCROFT 001-019999 STATE OF ILLINOIS 08/09/24

Office of Construction and Facilities Management

VA U.S. Department of Veterans Affairs

Drawing Title: ARCHITECTURAL - LEVEL 5 STRIPING PLAN	Phase: ISSUE FOR BID	Project Title: PARKING RAMP EXPANSION	Project Number: 528-18-375
			Building Number: 29
Approved: Project Director		Location: 3495 BAILEY AVE., BUFFALO, NY 14215	Drawing Number: AJ125.1
		Issue Date: 08-09-2024 / Checked / Drawn	

6/14/2009 12:39:03 PM

N:\50-21163-Buffalo VAMC\Dwgs\CD\AJ125-1 ARCHITECTURAL - LEVEL 5 STRIPING PLAN.dwg

VA FORM 08 - 6231

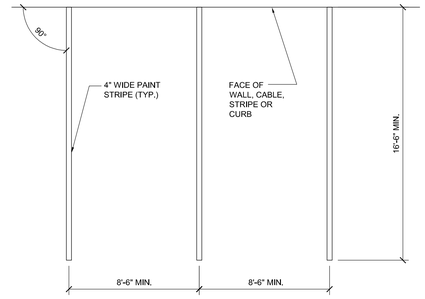

NOTE: VERIFY 18'-0" DEEP STALL CLEARANCE PER NOTE 2 THIS SHEET DURING PRELIMINARY LAYOUT. NOTIFY ARCHITECT IF CONDITIONS PROHIBIT STALL CLEARANCE OR ACCESS TO ADJACENT STALLS IS BLOCKED.

2B STANDARD STALL TYPICAL STRIPING DETAIL

SCALE: NONE

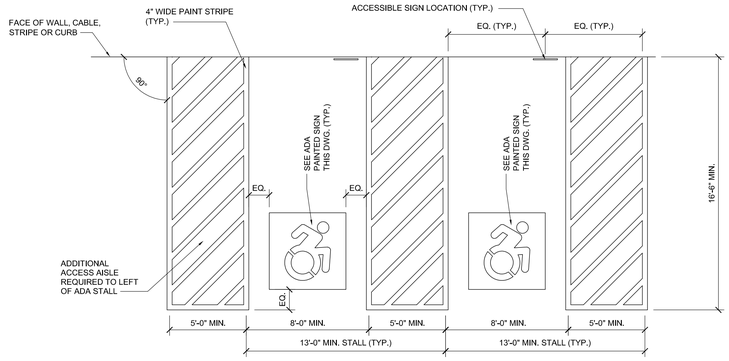

NOTE: VERIFY 18'-0" DEEP STALL CLEARANCE PER NOTE 2 THIS SHEET DURING PRELIMINARY LAYOUT. NOTIFY ARCHITECT IF CONDITIONS PROHIBIT STALL CLEARANCE OR ACCESS TO ADJACENT STALLS IS BLOCKED.

2D ADA STALL TYPICAL STRIPING DETAIL

SCALE: NONE

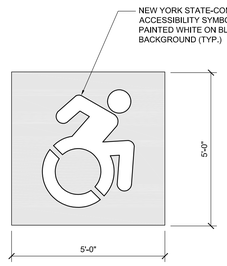

5E TYPICAL STRIPING DETAIL

SCALE: NONE

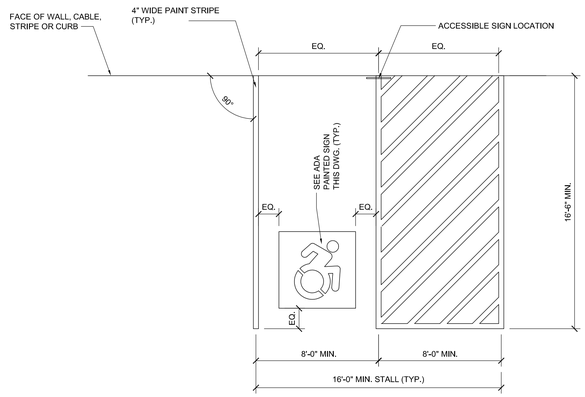

NOTE: VERIFY 18'-0" DEEP STALL CLEARANCE PER NOTE 2 THIS SHEET DURING PRELIMINARY LAYOUT. NOTIFY ARCHITECT IF CONDITIONS PROHIBIT STALL CLEARANCE OR ACCESS TO ADJACENT STALLS IS BLOCKED.

2F ADA VAN STALL TYPICAL STRIPING DETAIL

SCALE: NONE

SHEET NOTES:

1. PAINTED PAVEMENT MARKING: UNLESS NOTED OTHERWISE OR DIRECTED OTHERWISE BY THE CONTRACTING OFFICER'S REPREENTATIVE, PROVIDE THE PAINT COLORS INDICATED THIS SHEET.
2. PARKING MODULES THIS PROJECT ARE BASED ON 18'-0" DEEP STALLS (EXCLUSIVE OF ANY COLUMN ENCROACHMENTS), ALL STALLS MUST BE "SHORT-STRIPED" BY 1'-6" AS INDICATED THIS SHEET U.N.O.
3. SEE SECTION 09 91 33 FOR ADDITIONAL INFORMATION PERTAINING TO PAINTED SIGNAGE AND STRIPING WITHIN THE BUILDING.
4. COMPLY WITH DETAILED DIMENSIONS SHOWN ON THE CIVIL DRAWINGS UNLESS NOTED OTHERWISE THIS SHEET.
5. REFERENCE SHEET C502 FOR PAINTING OF DIRECTIONAL ARROW DETAIL.

PAVEMENT MARKING PAINT SCHEDULE

A. PAINTED PAVEMENT MARKING: UNLESS OTHERWISE NOTED, PROVIDE THE FOLLOWING COLORS:
   1. MARKINGS FOR DRIVE AISLES
      a. PAINTED ARROWS AND PAINTED LANE STRIPING EXISTING BETWEEN OPPOSING DIRECTIONS OF TRAFFIC: YELLOW COLOR.
      b. PAINTED SIGNAGE, PAINTED SYMBOLS (OTHER THAN ARROWS) AND LANE STRIPING BETWEEN LANES IN THE SAME DIRECTION: WHITE COLOR.
      c. PAINTED CROSSWALKS: WHITE COLOR.
   2. MARKINGS FOR "NO PARKING" AREAS
      a. PAINTED STALL STRIPING: YELLOW COLOR.
      b. PROHIBITED PARKING ZONES DESIGNATED ON THE PLANS AS AREAS WITH A SERIES OF DIAGONAL PAINTED STRIPES (EXCLUDES CROSSWALKS): YELLOW COLOR.
      c. PAINT ALL CURBS WITHIN OR ALONGSIDE A NO PARKING ZONE, CURBS THAT SEPARATE PEDESTRIAN AREAS FROM VEHICULAR AREAS, AND CURBS WITHIN SIX FEET OF CROSSWALKS: YELLOW COLOR.
         1) CURB ISLAND LOCATIONS: PAINT ONLY CURB FACES AND THE TOP 6" NEAREST THE CHANGE OF ELEVATION.
   3. MARKINGS FOR PARKING STALL IDENTIFICATION AND ZONE IDENTIFICATION
      a. ADA PAINTED SIGNAGE ON PAVEMENT: WHITE ON BLUE BACKGROUND WITH WHITE BORDER.
      b. PAINTED TEXT AND/OR NUMBERS: WHITE ON BLACK BACKGROUND.

ISSUE FOR BID	08-09-2024
Revisions:	Date:

CONSULTANT

DESMAN

ARCHITECT/ENGINEER OF RECORD

BANCROFT ARCHITECTS + ENGINEERS

3300 Dundee Rd.
Northbrook, IL 60062
T: 847.952.9362
www.bancroft-ae.com

STAMP

LICENSED ARCHITECT — BRIAN D. ZAWADA — 001029591 — STATE OF ILLINOIS

Office of Construction and Facilities Management

VA U.S. Department of Veterans Affairs

Drawing Title: ARCHITECTURAL - STRIPING DETAILS	Phase: ISSUE FOR BID	Project Title: PARKING RAMP EXPANSION	Project Number: 528-18-375
			Building Number: 29
Approved: Project Director		Location: 3495 BAILEY AVE., BUFFALO, NY 14215	Drawing Number: AJ501
		Issue Date: 08-09-2024 / Checked / Drawn	

VA FORM 08 - 6231

N:\50-21163-Buffalo VAMC\Dwgs\CD\AJ501 ARCHITECTURAL - STRIPING DETAILS.dwg
6/14/2009 12:39:03 PM