Enclosure 4

Representative Task Order 2
Major Subsystem Upgrade: Mission Graphics

Background:

The Range is planning a major upgrade to its primary real time display systems used to provide real time situational awareness and decision support in its Range Control Center (RCC) during launches. The system has gone by the name "Mission Graphics" for many years. The Mission Graphics system ingests selected processed parameters associated with real time operations from other systems and displays them in a variety of alphanumerical or graphical format using preselected formats (including text and various 2D plots with or without map or other overlays). The Mission Graphics system is shown in Figure 1 for context within the existing range architecture and is located to the right of center in the diagram. The current system consists of legacy software developed by the government in the late 1980s. The Contractor currently provides operations, maintenance, and sustainment for Mission Graphics system hardware and software.

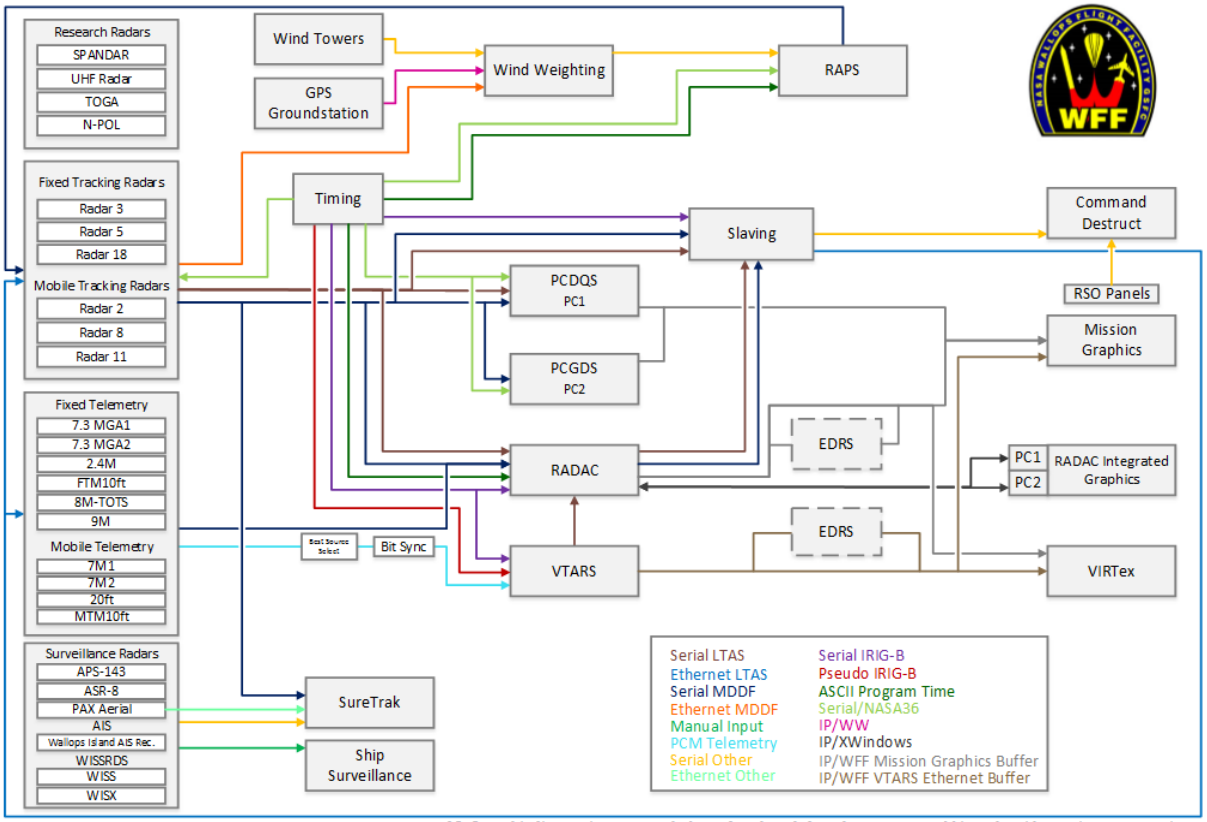

Figure 1. Range Architecture Diagram. Mission Graphics is located to the right of center

The Range has initiated tasks to the Applied Engineering and Technology Directorate (AETD) to explore applicable systems and technologies that could be useful in replacing the current system and has issued the following task to the Contractor.

RTO 2: Mission Graphics Replacement Support

Period of Performance: April 1, 2018 through March 31, 2020.

The Contractor shall provide expert technical assistance in the development of a replacement for the Mission Graphics system, expected to take two years from the initiation of this task. Support will include three elements:

1. Development of operational requirements including functional and human factors related inputs
2. Development of *suggested* technical and other acceptance criteria that the Range will utilize to accept the system into operations (where it will be provided as GFE to the Contractor for ongoing operations, maintenance, and sustainment).
3. Description of other tasks that the Range could request of the Contractor which might increase the quality of the system ultimately delivered.

For this RTO, provide the following:

- A description, not more than one page in length, of the approach that the Contractor will use meet the requirements of the overall task and how that approach will help ensure a successful and high-value outcome for the Mission Graphics replacement activity.
- A description, not more than 5 pages in length, of:
    - *Suggested* high level requirements that the Range should levy on AETD and its contractors to design and develop the system ("high level" here is left to the RTO respondent's discretion)
    - Method, process, or approach by which the Contractor proposes to fully identify and mature the operational requirements for the Mission Graphics system
    - Any other information the Contractor feels would be relevant to the Range for its consideration with respect to element #1 above.
- A description, not more than 5 pages in length, of:
    - Key technical, documentation, or other requirements (including interim requirements) that the Range should levy as acceptance criteria on the completed system
    - Methods, process, or approach by which the Contractor proposes to fully identify and mature the acceptance criteria for the Mission Graphics system
    - Any other information that the Contractor feels would be relevant to the Range for its consideration with respect to element #2 above
- A description, not more than 1 page in length, of:
    - Plans, products, processes or approaches that the Range should consider and which would have the effect of increasing the overall quality or value of the Mission Graphics system replacement effort
    - Key risks that the Range should consider as it evaluates:
        - the Contractor's response to this RTO
        - the overall Mission Graphics system replacement effort