PATRICK AIR FORCE BASE
FLORIDA

SXHT 16-1100

REPAIR / REPLACE LIFT STATION 725

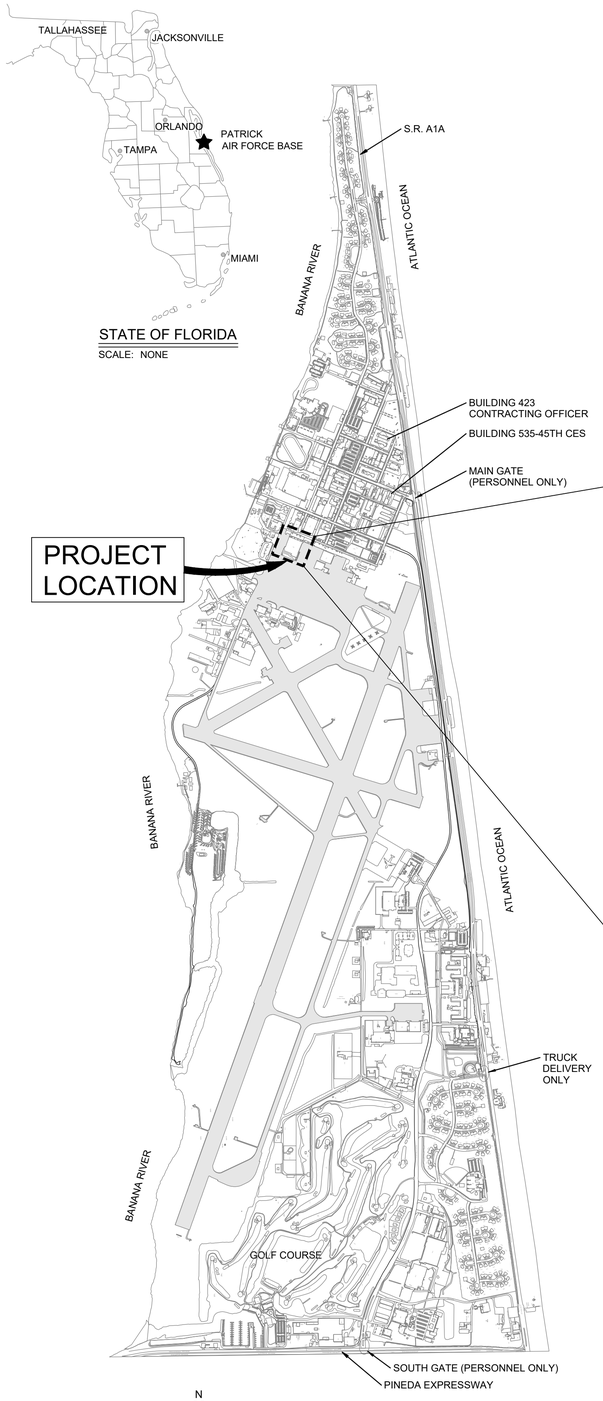

LOCATION MAP
SCALE: NONE

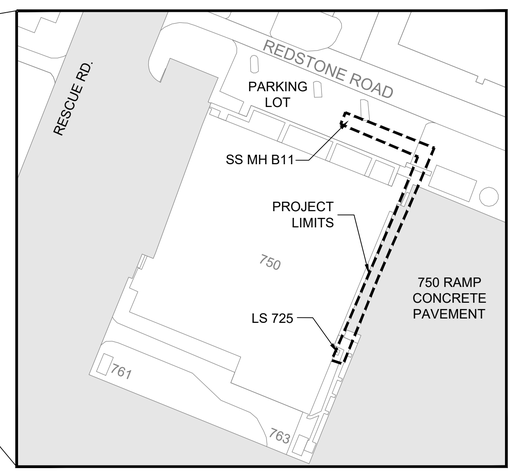

ENLARGED HANGAR 750 AREA
SCALE: NONE

DRAWING INDEX	
Sheet Number	Sheet Title
GENERAL	
G-001	LOCATION MAP, PROJECT AREA AND DRAWING INDEX
CIVIL	
C-001	GENERAL NOTES, ABBREVIATIONS, AND LEGEND
C-101	LIFT STATION 725 DEMO AND SITE PLAN
C-501	LIFT STATION 725 DETAILS AND NOTES
C-502	SANITARY SEWER DETAILS
C-503	CIVIL DETAILS
ELECTRICAL	
E-001	ELECTRICAL NOTES, LEGEND AND ABBREVIATIONS
E-101	ELECTRICAL DEMO, NEW CONSTRUCTION AND SITE PLAN
E-501	LIFT STATION CONTROL PANEL DETAIL
E-502	ENCLOSURE AND DEADFRONT LAYOUT
E-503	LIFT STATION TERMINAL CONNECTION BOX DETAIL
E-504	LIFT STATION SEQUENCE OF OPERATIONS
E-505	LIFT STATION CONTROL PANEL POWER
E-506	LIFT STATION CONTROL PANEL 120V WIRING
E-507	LIFT STATION CONTROL PANEL SCADAPACK & FIELD WIRING

PERMIT(S)/ENVIRONMENTAL ACTIONS
REQUIRED PRIOR TO CONSTRUCTION

ERP/STORMWATER		NOI/SWPPP	
ERP/WETLANDS/DREDGE & FILL		IRP	
FDEP/DRINKING WATER		SURVEY/WILDLIFE	
FDEP/DOM. WASTE WATER	√	ARCHEO./HISTORICAL	
FDEP/IND. WASTE WATER		OTHER	
FDEP/FUEL TANK		NONE	

NOTE: IF IT IS SUSPECTED THAT ANY HAZARDOUS MATERIAL NOT IDENTIFIED ON THESE DRAWINGS IS REQUIRED TO BE DISTURBED IN ORDER TO PERFORM THE CONTRACT WORK, LEAVE MATERIAL UNDISTURBED AND IMMEDIATELY INFORM THE CONTRACTING OFFICER.

HAZARDOUS MATERIALS	YES	NO	NOT VERIFIED
ASBESTOS			√
HEAVY METALS			√
LEAD			√
PCB			√

ENGINEER OF RECORD: DAVID A. LAVENDER
LICENSE NUMBER: 66400
NAME AND ADDRESS OF BUSINESS:
ALLEN ENGINEERING, INC.
106 DIXIE LANE (P.O. BOX 321321)
COCOA BEACH, FLORIDA 32932-1321
OFFICE: (321) 783-7443 - FAX: (321)783-5902
E-MAIL: INFO@ALLENENG.NET
FL C.A. # LB 266
AEI #: 170051
RAEIS CONTRACT NO: FA2521-13-D-0005-18F0039

APPROVED
USER:
CHIEF, ENGINEERING FLIGHT:
PROJECT MANAGER:
ENVIRONMENTAL:
FIRE:
CE OPERATIONS:
COMMUNICATIONS:
SAFETY:
SECURITY FORCES:
ATO:
OTHER:

DEPARTMENT OF THE AIR FORCE

DATE: 2/13/2018
SXHT 16-1100
DELIVERY NO. FA2521-13-0005 18F0039
AS BUILT DATE: ####
DESIGNED BY: D. LAVENDER
DRAWN BY: D. ARTZNER
REVIEWED BY: C. HARTNETT
SUBMITTED BY: G. BEARD

USAF 45TH CIVIL ENGINEER SQUADRON PAFB, FL
CONTRACT NO.: FA2521-13-D-0005 - 18F0039

RAEIS OTIE GP STRATEGIES AMRC ALLEN Engineering,Inc.
RANGE ARCHITECT-ENGINEER, INSPECTION SERVICES
An Oneida Nation Company

SXHT 16-1100
REPAIR / REPLACE LIFT STATION 725
LOCATION MAP, PROJECT AREA AND DRAWING INDEX

SHEET IDENTIFICATION
G-001

X:\SXHT\16-1100 Repair-Replace Lift Station 725\DWG\16-1100 G-001.dwg, 2/14/2018 11:40:00 AM

GENERAL NOTES:

1. SEE SHEET C-501 FOR TYPICAL LIFT STATION, NOTES AND DETAILS.
2. SEE ELECTRICAL SHEETS FOR ELECTRICAL NOTES, PLANS AND DETAILS.
3. DUE TO SPACE LIMITATIONS, THE DEMOLITION WORK OF THE EXISTING LIFT STATION SHALL OCCUR PRIOR TO THE NEW SEWER LIFT STATION SYSTEM. THE CONTRACTOR SHALL COORDINATE REQUESTED WASTEWATER SERVICE OUTAGE WITH THE CONTRACTING OFFICER AND FACILITY AT LEAST TWO WEEKS PRIOR TO OUTAGE.
4. NEW ELECTRICAL SUPPLY AND CONTROL PANEL SHALL BE INSTALLED AND OPERATIONAL IN ORDER TO MINIMIZE POWER OUTAGE DURING TRANSFER.
5. COORDINATE ALL UTILITY OUTAGES THROUGH THE CONTRACTING OFFICER. THE CONTRACTOR SHALL SUBMIT A PLAN AND BE RESPONSIBLE FOR SCHEDULING AND MINIMIZING THE AMOUNT OF TIME THE FACILITY SERVED BY THE LIFT STATION IS WITHOUT UTILITY SERVICE.
6. CONTRACTOR IS RESPONSIBLE TO REQUEST UTILITY LOCATES AND OBTAIN AN AF FORM 103 PRIOR TO CONSTRUCTION.
7. UNDERGROUND UTILITY LINES SHOWN ARE BASED ON BEST AVAILABLE MAPS AND SHALL BE VERIFIED BY THE CONTRACTOR.
8. CONTRACTOR SHALL BE RESPONSIBLE FOR TESTING CONCRETE FOR ASBESTOS PER SPECIFICATION SECTION 01 57 19 PRIOR TO CUTTING OPERATIONS FOR DISPOSAL OF STRUCTURES SHOWN TO BE REMOVED OR DEMOLISHED.
9. CONTRACTOR SHALL COMPLY WITH, BUT NOT LIMITED TO: AFI 32-7086, HAZARDOUS MATERIALS MANAGEMENT, FEBRUARY 2015 AND THE 45TH SW HAZMAT TRACKING PROCEDURES FOR CONSTRUCTION AND SERVICE CONTRACTORS. THE CONTRACTOR SHALL CONTACT THE 45 CES/CEIE HAZARDOUS MATERIALS PROGRAM MANAGER AT 321-494-9268 TO REVIEW AUTHORIZATION PROCEDURES PRIOR TO HAZARDOUS MATERIALS BEING BROUGHT ON TO 45 SW PROPERTY. NO HAZARDOUS MATERIALS ARE ALLOWED TO BE BROUGHT ON TO ANY 45 SW INSTALLATION WITHOUT PRIOR APPROVAL.
10. DISPOSAL OF WASTE STREAM SHALL COMPLY WITH THE 45SW OPLAN 19-14 WASTE MANAGEMENT PLAN.
11. IF NIGHT WORK IS REQUIRED FROM 1 MAY TO 31 OCT BETWEEN 2100 TO 0600 HOURS, A LIGHT MANAGEMENT PLAN MUST BE REVIEWED AND APPROVED THROUGH THE CONTRACTING OFFICER AND 45 CES ENVIRONMENTAL (45 CES/CEIE) AT LEAST 45 DAYS PRIOR TO NIGHT WORK COMMENCEMENT.
12. SOLID WASTE MUST BE MANAGED IN ACCORDANCE WITH THE INSTRUCTIONS SET FORTH IN THE CONTRACT SPECIFICATIONS. THE CONTRACTOR IS ALSO RESPONSIBLE FOR OFF-SITE DISPOSAL OF NON-HAZARDOUS WASTE AND ALLOW FOR THE RECYCLING OF MATERIALS AND DEBRIS TO THE LARGEST EXTENT POSSIBLE.
13. CONSTRUCTION DEWATERING IS NECESSARY FOR THE INSTALLATION OF THE PROPOSED LIFT STATION WET WELL. THE CONTRACTOR SHALL BE RESPONSIBLE FOR OBTAINING APPROVAL OF A DEWATERING PLAN PRIOR TO ANY DEWATERING. COORDINATE THE DEWATERING PLAN APPROVAL THROUGH THE CONTRACTING OFFICER. NO CONSTRUCTION DEWATERING SHALL BE ALLOWED INTO EXISTING STORMWATER RETENTION AREAS, DRAINAGE OR SANITARY SEWER SYSTEM. REFERENCE SPECIFICATIONS SECTION 01 57 19, PARAGRAPH "SURFACE AND GROUNDWATER". THE SITE IS LOCATED WITHIN 500 FEET OF KNOWN GROUNDWATER IMPACTED WITH PFOS/PFOA WITH LIKELY POTENTIAL TO IMPACT THE DEWATERING OPERATIONS. THE AREA SOUTH OF THE PROJECT SITE BETWEEN BLDG. 761 AND 763 AND NORTH OF THE SITE ENCOMPASSING BLDG. 705 AND THE MIXING TANKS HAS POSITIVE DETECTIONS OF PERFLUOROOCTANOIC ACID (PFOA) AND PERFLUOROOCTANE SULFONATE (PFOS) IN THE GROUNDWATER ABOVE THE EPA HEALTH ADVISORY LIMITS / DRINKING WATER STANDARDS. THE DEWATERING EFFLUENT SHALL BE CONTAINED AND DIRECTED INTO ONE OF THESE TWO PERVIOUS AREAS TO RETAIN ANY PFOA/PFOS WITHIN THE EXISTING KNOWN IMPACTED LOCATIONS. THIS AREA WILL REQUIRE ADDITIONAL COORDINATION WITH IRP. DEWATERING EFFLUENT CANNOT BE PUMPED INTO CANALS, DITCHES, SURFACE WATERS, OR OVERFLOW INTO ADJACENT AREAS.
14. THE CONTRACTOR SHALL CONSULT WITH THEIR HEALTH AND SAFETY REPRESENTATIVE TO ENSURE THAT WORKERS EMPLOY PROPER PERSONAL PROTECTIVE EQUIPMENT WHEN WORKING IN OR AROUND DEWATERING FLUIDS OR EXPOSED GROUNDWATER. AT THE CONTRACTOR'S OPTION AND EXPENSE, TESTING OF THE CHEMICAL CONSTITUENTS IN THE GROUNDWATER MAY BE PERFORMED BY THE CONTRACTOR, BUT IS NOT REQUIRED.
15. STORMWATER BMPs FOR EROSION AND SEDIMENTATION CONTROL SHALL BE INSTALLED PRIOR TO START OF SITE CONSTRUCTION OR DEMOLITION.
16. THE HANGAR BLDG. 750 WILL BE OPERATIONAL DURING CONSTRUCTION, HOWEVER THE RESTROOMS AND SANITARY DRAINS SERVED BY LIFT STATION 725 WILL BE CLOSED DURING CONSTRUCTION. THE DEMOLITION AND PROPOSED WORK AFFECTING SERVICE OUTAGE SHALL BE COORDINATED WITH THE CONTRACTING OFFICER. THE CONTRACTOR SHALL ALSO ENSURE PUBLIC SAFETY MEASURES AND MINIMIZED IMPACTS TO THE HANGAR ACCESS ARE PROVIDED.
17. CONTRACTOR SHALL COORDINATE WITH THE WATER SHOPS THROUGH THE CONTRACTING OFFICER FOR EXISTING FORCEMAIN SHUTOFF TO PERFORM DEMOLITION AND CAPPING OF THE EXISTING LINE.
18. DUE TO THE CLOSE PROXIMITY OF THE LIFT STATION SITE ADJACENT TO HANGAR BLDG. 750, THE CONTRACTOR SHALL ENSURE METHODS OF EXCAVATION AND DEWATERING ENSURE NO UNDERMINING OF THE EXISTING STRUCTURAL FOUNDATIONS.
19. ANY STOCKPILE OF EXCAVATED SOIL OR OTHER CONSTRUCTION MATERIAL STORED NEAR THE SITE SHALL BE COVERED AND CONTAINED WITHIN THE DESIGNATED AREA TO PREVENT F.O.D. HAZARD TO AIRFIELD AREAS.
20. FOR CONSTRUCTION SITE ACCESS, THE CONTRACTOR WILL BE REQUIRED TO OBTAIN AIRFIELD DRIVER TRAINING AS THE PROJECT IS LOCATED WITHIN THE AIRFIELD ON THE 750 APRON, BUT IS LOCATED OUTSIDE THE CONTROLLED AREA, SO NO RADIO CONTACT IS REQUIRED WITH THE CONTROL TOWER. DO NOT CROSS ANY RED RESTRICTED AREA LINES.
21. THIS PROJECT REQUIRES A TEMPORARY CONSTRUCTION WAIVER FOR WORK WITHIN THE AIRFIELD. THE CONTRACTOR SHALL COORDINATE WITH THE CONTRACTING OFFICER TO OBTAIN A TEMPORARY WAIVER AT LEAST 45 DAYS PRIOR TO START OF CONSTRUCTION.

ENGINEER'S NOTES:

1. NO TOPOGRAPHICAL, UTILITY, OR LOCATION SURVEY WAS PERFORMED.
2. THE INFORMATION SHOWN HEREON IS BASED ON BEST AVAILABLE DATA PROVIDED BY THE GOVERNMENT. THE CONTRACTOR SHALL VERIFY ALL EXISTING CONDITIONS, UTILITIES AND DIMENSIONS OF WORK PRIOR TO ORDERING ANY MATERIALS OR STRUCTURES.
3. ANY DISCREPANCIES FOUND BETWEEN THE CONTRACT DOCUMENTS AND ACTUAL FIELD CONDITIONS SHALL IMMEDIATELY BE BROUGHT TO THE ATTENTION OF THE CONTRACTING OFFICER.
4. THE LIFT STATION AND FORCE MAIN PIPING SHALL NOT BE PLACED INTO SERVICE UNTIL RECEIPT OF FDEP LETTER OF CLEARANCE.

ABBREVIATIONS:

AF	-	AIR FORCE
A.S.T.M.	-	AMERICAN SOCIETY FOR TESTING AND MATERIALS
BMPs	-	BEST MANAGEMENT PRACTICES
CLF	-	CHAINED LINK FENCE
CLP	-	CONCRETE LIGHT POLE
CMH	-	COMMUNICATIONS MANHOLE
C.O.	-	CONTRACTING OFFICER
CO	-	CLEANOUT
CONC.	-	CONCRETE
CPP	-	CONCRETE POWER POLE
CTRL.	-	CONTROL
Cx	-	UNDERGROUND COMMUNICATIONS
DCDA	-	DOUBLE CHECK DETECTOR ASSEMBLY
E	-	EASTING
ECP	-	ELECTRIC CONTROL PANEL
EHH	-	ELECTRIC HANDHOLE
EL.	-	ELEVATION
ET	-	ELECTRIC TRANSFORMER
Ex	-	UNDERGROUND ELECTRIC
FDC	-	FIRE DEPARTMENT CONNECTION
FE	-	FLANGED END
FH	-	FIRE HYDRANT
FL	-	FLANGED
FM	-	FORCEMAIN PIPE
FMB	-	FORCEMAIN BEND
FMT	-	FORCEMAIN TEE
F.O.D.	-	FOREIGN OBJECT DEBRIS
FOx	-	UNDERGROUND FIBER OPTIC
FRP	-	FIBERGLASS REINFORCED POLYESTER
GA	-	GUY ANCHOR
GEN.	-	GENERATOR
GL	-	GROUND LIGHT
GPS	-	GLOBAL POSITIONING SYSTEM
GT	-	GREASE TRAP MANHOLE
GV	-	GAS VALVE
Gx	-	UNDERGROUND GAS
HDD	-	HORIZONTAL DIRECTIONAL DRILL
INV.	-	INVERT
IRT	-	5/8" IRON ROD TRAVERSE
IRP	-	INSTALLATION RESTORATION PROGRAM
LB	-	LAND SURVEYING BUSINESS
LS	-	LIFT STATION
MCC	-	MOTOR CONTROL CENTER
MGP	-	METAL GUARD POST
MH	-	MANHOLE
MTS	-	MANUAL TRANSFER SWITCH
MW	-	MONITORING WELL
N	-	NORTHING
NAD	-	NORTH AMERICAN DATUM
NAVD88	-	NORTH AMERICAN VERTICAL DATUM OF 1988
NDT	-	NAIL & DISK TRAVERSE
PIV	-	POST INDICATOR VALVE
PVC	-	POLYVINYL CHLORIDE
RCP	-	REINFORCED CONCRETE PIPE
SCH	-	SCHEDULE
SDx	-	UNDERGROUND STORM DRAINAGE
S.S.	-	STAINLESS STEEL
SSx	-	UNDERGROUND SANITARY SEWER
SVV	-	SANITARY VALVE VAULT
TH	-	TEST HOLE
T.O.P.	-	TOP OF PIPE ELEVATION
TYP	-	TYPICAL
USC&GS	-	UNITED STATES COAST & GEODETIC SURVEY
WV	-	WATER VALVE
Wx	-	UNDERGROUND WATER
XFMR	-	TRANSFORMER

LEGEND:

—— W_x ——	EXISTING UNDERGROUND WATER MAIN
————	EXISTING DOMESTIC WATER SERVICE LINE
—— AIP ——	EXISTING ABANDONED IN PLACE WATER LINE
—— F ——	EXISTING UNDERGROUND FIRE LINE
—— SS_x ——	EXISTING SANITARY GRAVITY SEWER
—— FM ——	EXISTING SANITARY FORCE MAIN EXISTING
—— C_x ——	UNDERGROUND COMMUNICATION EXISTING
—— E_x ——	UNDERGROUND ELECTRIC EXISTING
—— G_x ——	UNDERGROUND GAS LINE
—— SD_x ——	EXISTING STORM DRAIN LINE
—— SS ——	PROPOSED GRAVITY SANITARY
—— FM ——	SEWER PROPOSED GRAVITY SANITARY
—— SF ——	SEWER PROPOSED SILT FENCE
	ITEM TO BE REMOVED OR DEMOLISHED

ENGINEER OF RECORD: DAVID A. LAVENDER
LICENSE NUMBER: 66400
NAME AND ADDRESS OF BUSINESS:
ALLEN ENGINEERING, INC.
106 DIXIE LANE (P.O. BOX 321321)
COCOA BEACH, FLORIDA 32932-1321
OFFICE: (321) 783-7443 - FAX: (321)783-5902
E-MAIL: INFO@ALLENENG.NET
FL C.A. # LB 266
AEI #: 170051
RAEIS CONTRACT NO: FA2521-13-D-0005-18F0039

DEPARTMENT OF THE AIR FORCE

DESIGNED BY: D. LAVENDER
DRAWN BY: D. ARTZNER
REVIEWED BY: C. HARTNETT
SUBMITTED BY: G. BEARD
DATE: 2/13/2018
SXHT 16-1100
DELIVERY NO. FA2521-13-D-0005 18F0039
AS BUILT DATE: ####

USAF 45TH CIVIL ENGINEER SQUADRON PAFB, FL

CONTRACT NO.: FA2521-13-D-0005 - 18F0039

RAEIS — RANGE ARCHITECT ENGINEER, INSPECTION SERVICES — GP STRATEGIES OTIE An Lockheed Martin Company — AMRC — ALLEN Engineering, Inc.

SXHT 16-1100

REPAIR / REPLACE LIFT STATION 725

GENERAL NOTES, ABBREVIATIONS, AND LEGEND

SHEET IDENTIFICATION

C-001

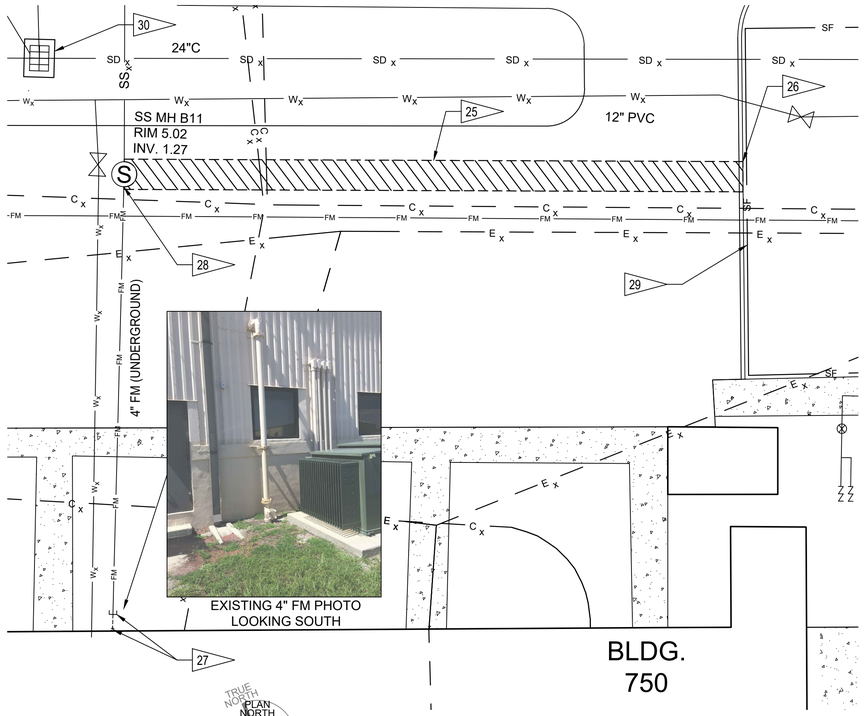

FORCE MAIN DEMO PLAN

SCALE: 1" = 10'

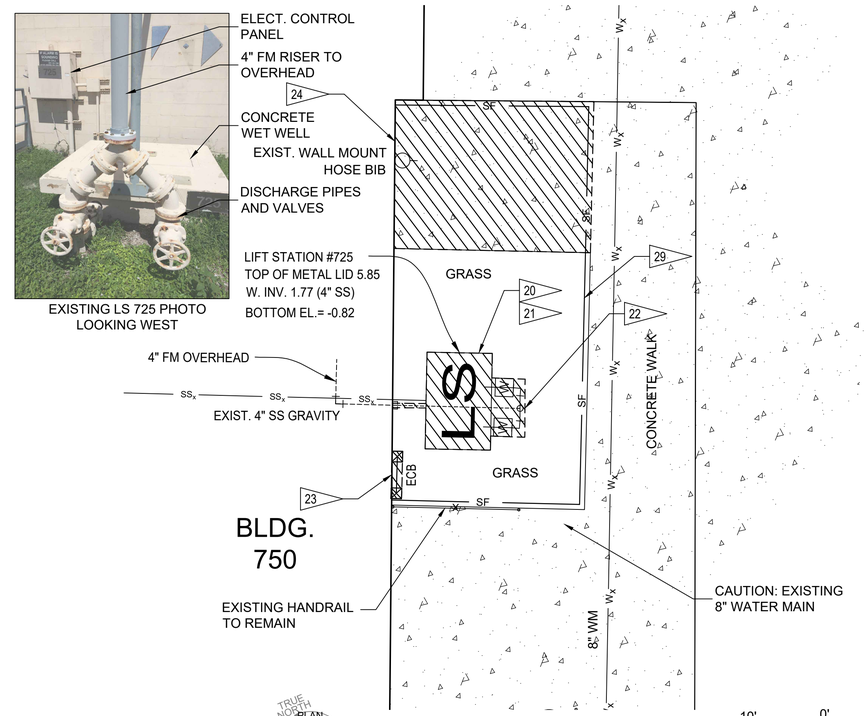

LIFT STATION 725 DEMO PLAN

SCALE: 1" = 5'

GRAPHIC SCALE 1" = 10'

GRAPHIC SCALE 1" = 5'

DEMOLITION FLAG NOTES:

20. REMOVE EXISTING CONCRETE RECTANGULAR WET WELL OF LIFT STATION 725 AND DISCONNECT EXISTING BURIED 4" SS GRAVITY LINE. COORDINATE SERVICE OUTAGE WITH CONTRACTING OFFICER AND FACILITY PRIOR TO STARTING WORK.
21. REMOVE EXISTING PUMPS, RAIL SYSTEM, DISCHARGE PIPING, HARDWARE, FLOATS, AND ELECTRIC WIRING, ETC. FROM INSIDE WET WELL.
22. REMOVE EXISTING VALVES, DISCHARGE PIPING, AND HARDWARE INCLUDING FORCE MAIN PIPE OVERHEAD BACK TO BUILDING WALL. PLUG LINE ENTERING BUILDING WITH BLIND FLANGE.
23. DISCONNECT 208 V POWER TO EXISTING LIFT STATION CONTROL PANEL FED FROM BLDG. 750 PANEL, SEE ELECTRICAL PLAN. REMOVE AND TURN OVER THE EXISTING CONTROL PANEL TO GOV'T.
24. SAWCUT AND REMOVE EXISTING CONCRETE SLAB FOR EXCAVATION OF HORIZONTAL DIRECTIONAL DRILL PIT FOR PROPOSED 4" HDPE FM.
25. SAWCUT ASPHALT AND REMOVE FOR PROPOSED SANITARY FM LINE TRENCHING TO CONNECT TO EXISTING MANHOLE.
26. SAWCUT CONCRETE CURB AND REMOVE EXISTING PORTIONS FOR SANITARY FM LINE TRENCHING.
27. ABANDON EXISTING 4" FM OVERHEAD COMING OUT OF BLDG. 750 WALL. PLUG LINE OUTSIDE AT BUILDING WALL BY REMOVING 90° ELBOW AND INSTALLING BLIND FLANGE. REMOVE EXISTING 4" FM VERTICAL PORTION DOWN TO 3' BELOW GRADE. CAP EXISTING LINE UNDERGROUND, BACKFILL AND RESTORE DISTURBED GROUND WITH SOD.
28. GROUT PLUG EXISTING 4" FM SOUTH INVERT AT MANHOLE.
29. SILT FENCE PHASED AS NECESSARY FOR SEDIMENT CONTROL.
30. PROVIDE SILT FENCE AROUND EXIST. STORM INLET.

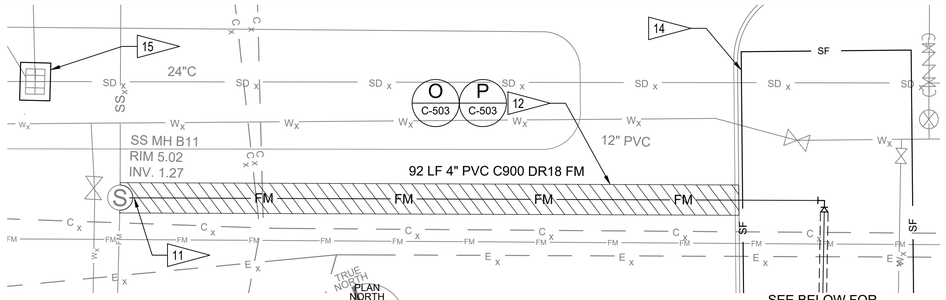

FORCE MAIN LAYOUT PLAN

SCALE: 1" = 10'

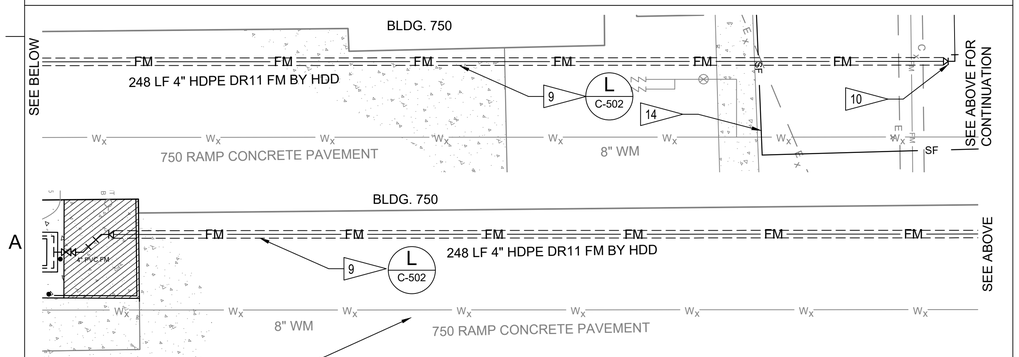

FORCE MAIN LAYOUT PLAN

SCALE: 1" = 10'

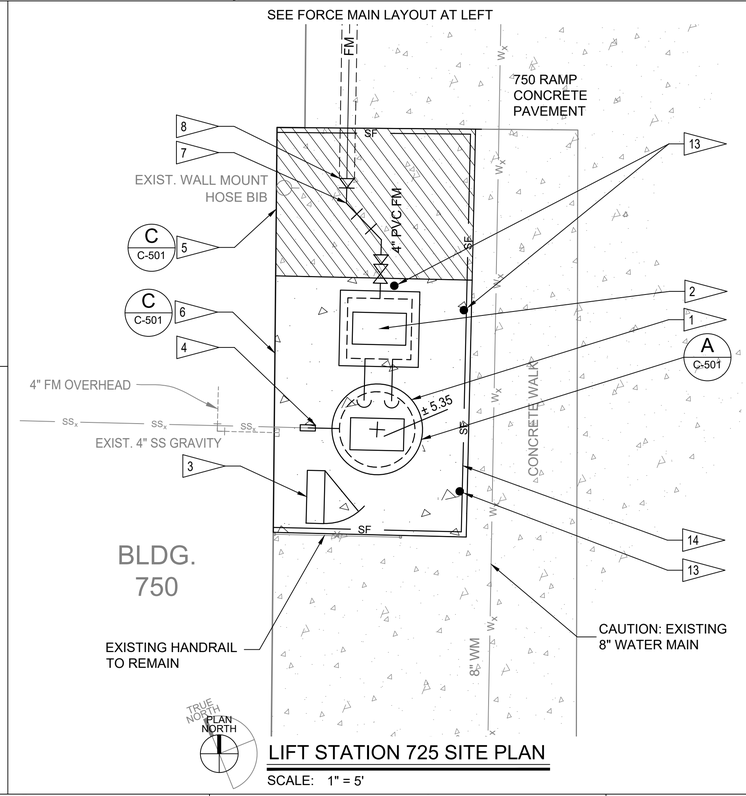

LIFT STATION 725 SITE PLAN

SCALE: 1" = 5'

CONSTRUCTION FLAG NOTES:

1. PROVIDE DUPLEX LIFT STATION, 5' INNER DIA. WET WELL, (2) IN-SERVICE NON-CLOG EXPLOSION PROOF SUBMERSIBLE PUMPS, PERIMETER CONCRETE PAD TOP EL. 5.35', FORCE MAIN PIPING, CONCRETE VALVE VAULT, AND MOTOR CONTROL CENTER.
2. EMERGENCY BY-PASS PUMPOUT CONNECTION INSIDE VAULT HATCH OPENING, SEE DETAILS ON SHEET C-501.
3. PROVIDE NEW DUPLEX ELECTRIC CONTROL PANEL FOR LIFT STATION, SEE ELECTRICAL PLANS.
4. INSTALL REPAIR SLEEVE, CONNECT EXISTING 4" SS WASTE SERVICE LATERAL FROM BLDG. INTO NEW WET WELL, VERIFY SIZES & INVERTS.
5. OPEN CUT REMOVE AND REPLACE CONCRETE WALKWAY AREA FOR INSTALLATION OF HORIZONTAL DIRECTIONAL DRILL (HDD), MATCH EXISTING THICKNESS, 4000 PSI MIN.
6. CONSTRUCT NEW APPROX. 13'x17' CONCRETE LIFT STATION TOP SLAB RAISED 6" ABOVE SURROUNDING CONCRETE, SEE DETAILS ON C-501; PROVIDE EXPANSION JOINT AROUND ALL FOUR SIDES.
7. (2) 4"x45° MJ BENDS, ROTATED VERTICAL FOR CONNECTION TO HDD PIPE.
8. 4" MJ ADAPTER.
9. CONSTRUCT 248 LF 4" HDPE DR 11 FM BY HDD METHOD BENEATH 750 RAMP CONCRETE PAVEMENT.
10. 4" MJ ADAPTER, 4"x90° MJ BEND.
11. CONSTRUCT 92 LF 4" C900 DR18 PVC FM, CONNECT TO EXISTING MANHOLE, E. INV. 2.00; PROVIDE MANHOLE INVERT BENCH.
12. OPEN CUT REMOVE AND REPLACE ASPHALT PARKING LOT PAVEMENT AND CONCRETE CURB.
13. BOLLARD (TYP.)
14. SILT FENCE PHASED AS NECESSARY FOR SEDIMENT CONTROL.
15. PROVIDE SILT FENCE PROTECTION AROUND EXIST. STORM INLET.

ENGINEER OF RECORD: DAVID A. LAVENDER
LICENSE NUMBER: 66400
NAME AND ADDRESS OF BUSINESS:
ALLEN ENGINEERING, INC.
106 DIXIE LANE (P.O. BOX 321321)
COCOA BEACH, FLORIDA 32932-1321
OFFICE: (321) 783-7443 - FAX: (321)783-5902
E-MAIL: INFO@ALLENENG.NET
FL C.A. # LB 266
AEI #: 170051
RAEIS CONTRACT NO: FA2521-13-D-0005-18F0039

DEPARTMENT OF THE AIR FORCE

DATE: 2/13/2018	SXHT 16-1100
DELIVERY NO. FA2521-13-D-0005 18F0039	
DESIGNED BY: D. LAVENDER	DRAWN BY: D. ARTZNER
REVIEWED BY: C. HARTNETT	SUBMITTED BY: G. BEARD
AS BUILT DATE: ####	

USAF 45TH CIVIL ENGINEER SQUADRON PAFB, FL

CONTRACT NO.: FA2521-13-D-0005 - 18F0039

RAEIS OTIE — RANGE ARCHITECT ENGINEER, INSPECTION SERVICES — An Oneida Nation Company

GP STRATEGIES AMRC ALLEN Engineering, Inc.

SXHT 16-1100

REPAIR / REPLACE LIFT STATION 725

LIFT STATION 725 DEMO AND SITE PLAN

SHEET IDENTIFICATION

C-101

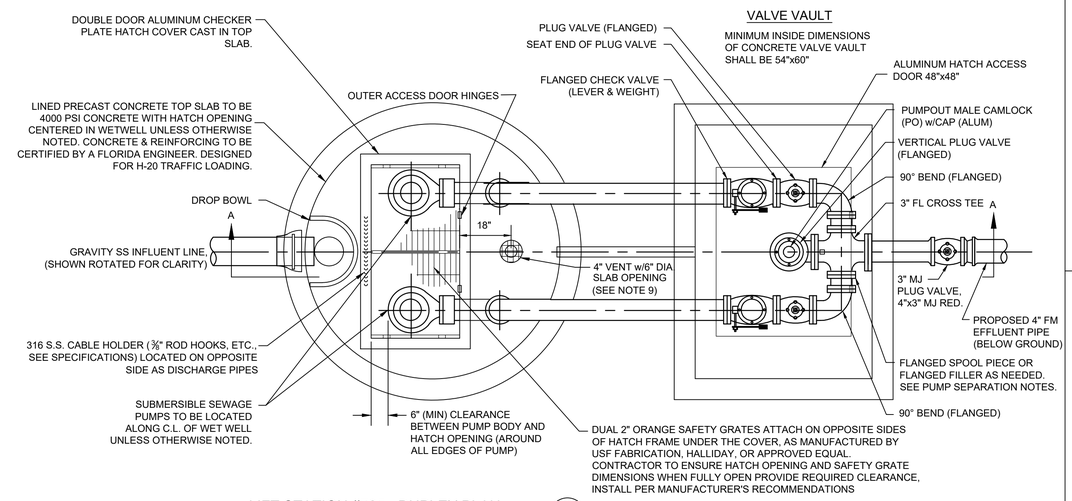

LIFT STATION #725 - DUPLEX PLAN (A / C-501)

SCALE: NONE

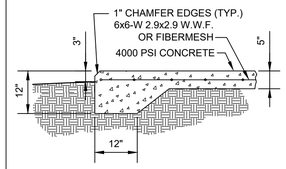

CONCRETE WALKWAY AND LIFT STATION PAD (C / C-501)

SCALE: NONE

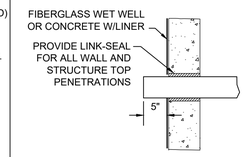

LIFT STATION CONDUIT PENETRATION (D / C-501)

SCALE: NONE

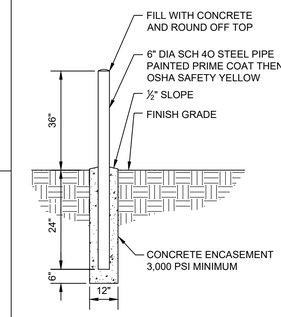

SEE PLAN SHEET FOR SITE LOCATIONS FOR BOLLARDS

PIPE BOLLARD DETAIL (E / C-501)

SCALE: NONE

GENERAL NOTES:

1. ALL EXPOSED FERROUS METAL SHALL BE PRIMED WITH TWO COATS OF EXTERIOR ENAMEL PAINT, PAFB COLOR.
2. FIBERGLASS WET WELL SHALL BE FRP BASIN MEETING ASTM D3753 SUITABLE FOR THE APPLICATION AND DIMENSIONS SHOWN ON THE DRAWINGS. THE WET WELL SHALL BE INSTALLED PER THE FRP MANUFACTURER'S RECOMMENDATIONS.
3. BASE AND FIRST RISER UNIT OF PRECAST STRUCTURES TO BE CAST MONOLITHIC.
4. VALVES, ELBOWS, AND SPOOL PIECES SHALL BE SIZED TO PERMIT EASY REMOVAL OF CHECK VALVE SPINDLES WITH MIN. CLEARANCES AS SHOWN FOR 6" DIA. PIPE AND SMALLER. CLEARANCES SHALL INCREASE AS REQUIRED FOR LARGER PIPE SIZES.
5. ALL LOCATIONS WHERE PIPES ENTER OR LEAVE THE WET WELL SHALL BE MADE WATER-TIGHT WITH WALL SLEEVES AND LINK-SEAL.
6. THERE SHALL BE NO VALVES OR ELECTRICAL JUNCTION BOXES IN THE WET WELL.
7. WET WELL COVERS SHALL BE ALUMINUM WITH 316 S. STL. HARDWARE AND LOCK BRACKET. SIZE AS REQUIRED BY PUMP MANUFACTURER.
8. ALL HARDWARE IN WET WELL, VALVE VAULT, AND ABOVEGROUND SHALL BE 316 STAINLESS STEEL; ALL NUTS/BOLTS/ WASHERS SHALL BE CONNECTED USING LOCK WASHERS.
9. FLEXIBLE COUPLINGS SHALL BE SLEEVE TYPE.
10. INSTALL AN ADJUSTABLE VALVE SUPPORT ROD UNDER EACH CHECK VALVE INSIDE THE VAULT.
11. SEE ELECTRICAL PLANS FOR CONTROL PANEL CONNECTIONS.
12. CONTRACTOR SHALL PROVIDE AND INSTALL ALL NECESSARY PIPING, VALVES, WET WELL, VALVE VAULT, MANHOLES, ACCESSORIES, AND CONTROLS, FOR A COMPLETE AND OPERABLE SANITARY SEWAGE LIFT STATION.
13. FIBERGLASS WET WELL STRUCTURE IS THE PREFERRED MATERIAL. IF A SUITABLE FIBERGLASS STRUCTURE IS NOT USED, A CONCRETE WET WELL SHALL HAVE THE ENTIRE INSIDE SURFACE OF WET WELL & TOP SLAB LINED WITH AGRU SURE GRIP HDPE LINER, OR EQUAL APPROVED LINER. LINER INSTALLER MUST BE CERTIFIED BY LINER MANUFACTURER. SUBMIT CERTIFICATION WITH SHOP DRAWING SUBMITTAL.
14. CONTRACTOR SHALL COORDINATE THE FINAL PUMP SELECTION WITH PAFB WATER SHOP PRIOR TO ORDERING TO CHECK FOR COMMON PUMPS STOCKED AND AVAILABILITY OF MATCHING REPLACEMENT PUMPS AND PARTS.
15. PRIOR TO STARTING DEMOLITION WORK, THE CONTRACTOR SHALL SUBMIT A SANITARY SEWAGE SERVICE OUTAGE REQUEST THROUGH THE CONTRACTING OFFICER FOR THE FACILITIES AT HANGAR 750 SERVED BY LIFT STATION #725.

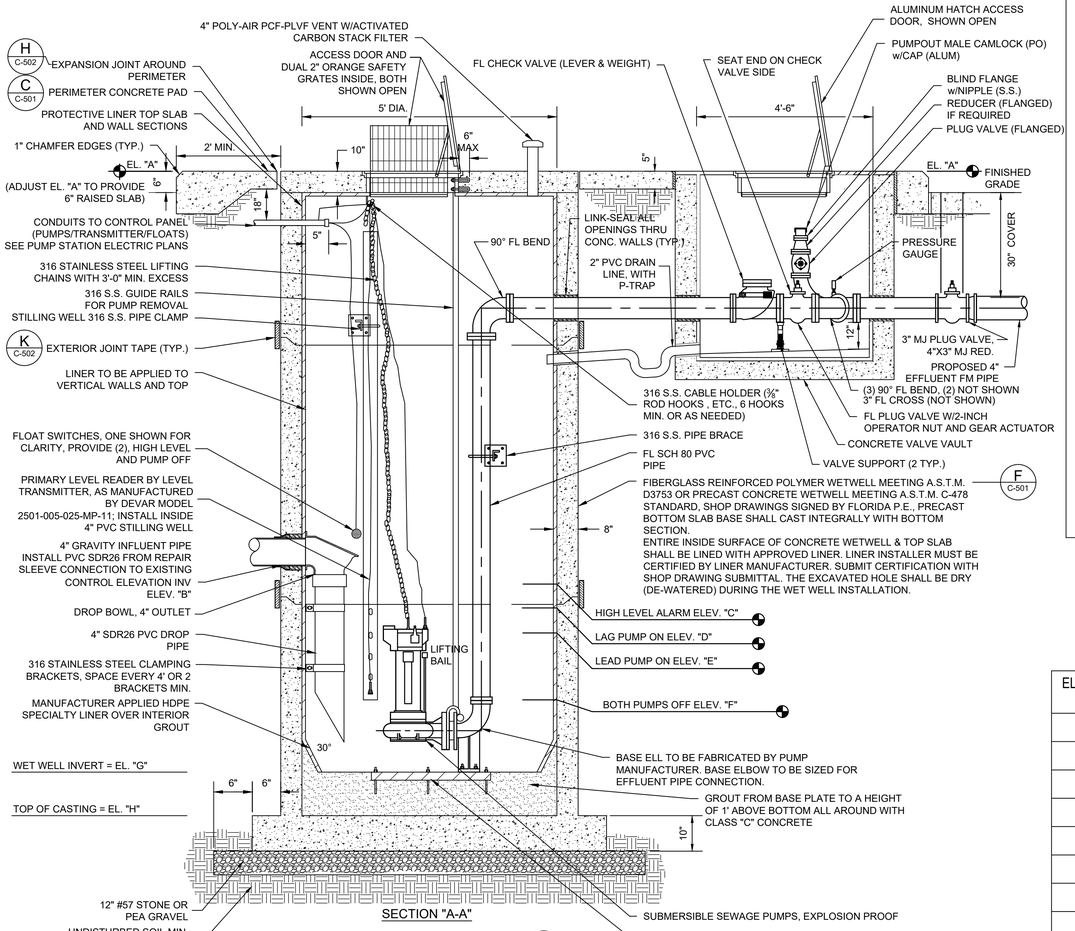

LIFT STATION #725 WET WELL (B / C-501)

SCALE: NONE

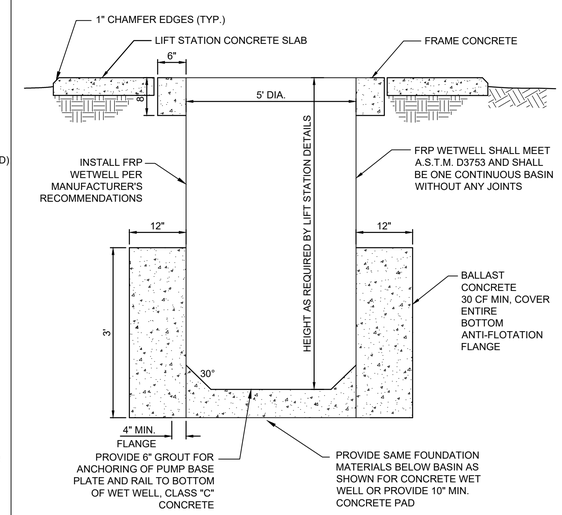

OPTION: FIBERGLASS WET WELL STRUCTURE (F / C-501)

SCALE: NONE

SANITARY SEWERAGE NOTES:

1. WHERE POTABLE WATER AND SANITARY SEWER MAIN CANNOT AVOID CROSSING WITH LESS THAN TWELVE (12) INCHES OF VERTICAL CLEARANCE OR WHERE THE SEWER MAIN IS ABOVE THE WATER MAIN, THE SEWER MAIN SHALL BE ENCASED WITH CONCRETE OR UPGRADED TO PRESSURE RATED PVC PIPE (MEETING THE AWWA C-900 OR C-905 SPECIFICATION) FOR A MINIMUM LENGTH OF TWENTY (20) FEET, CENTERED ON THE POINT OF CROSSING. A MINIMUM HORIZONTAL SEPARATION OF SIX (6) FEET (EDGE TO EDGE) BETWEEN POTABLE WATER MAINS AND SEWER MAINS SHALL BE MAINTAINED WHEN AT ALL POSSIBLE. WHEN THE 6-FOOT HORIZONTAL SEPARATION CANNOT BE MAINTAINED, THE SEWER MAIN SHALL BE INSTALLED WITH AT LEAST 3-FEET OF SEPARATION AND ON AN UNDISTURBED EARTH SHELF AT LEAST 6" BELOW A POTABLE WATER MAIN. THE SEPARATION REQUIREMENTS ARE PROVIDED ON DETAIL N SHEET C-503; THE CONTRACTOR SHALL NOTIFY THE ENGINEER THROUGH THE CONTRACTING OFFICER OF ANY LOCATIONS WHERE THE REQUIRED SEPARATION CANNOT BE MET TO DETERMINE APPROPRIATE ACTION.
2. TESTING AND INSPECTION:
   A. GRAVITY SEWERS SHALL BE TESTED TO ENSURE THAT INFILTRATION DOES NOT EXCEED 50 GPD/INCH DIA/MILE.
   B. PROVIDE DEFLECTION TEST, SEE NOTE 10.
   C. FORCE MAIN SHALL BE PRESSURE TESTED AT 100 PSI MINIMUM FOR A MINIMUM OF 1 HOUR. A LEAKAGE TEST SHALL BE PERFORMED CONCURRENTLY. LEAKAGE SHALL NOT EXCEED 0.25 GAL/HR/1000 LF OF 3-INCH OR 0.50 GAL/HR/1000 LF OF 6-INCH FORCE MAIN.
   D. VACUUM TEST NEW SEWER MANHOLES IN ACCORDANCE WITH ASTM C 1244.
3. ALL SANITARY SEWER COLLECTION SYSTEM CONSTRUCTION SHALL BE IN ACCORDANCE WITH THE LATEST REVISION OF THE UFC 3-240-01 "WASTEWATER COLLECTION."
4. ALL GRAVITY SANITARY SEWER LINES SHALL BE PVC (ASTM D3034, SDR35) WITH ELECTRO-METRIC GASKETS MEETING ASTM F477 UNLESS OTHERWISE NOTED. PVC FORCEMAINS SHALL MEET ASTM D 2241 SDR-21 (PC200), OR AWWA C900 DR-18 (PC235). HDPE FORCEMAINS SHALL BE AWWA C906 DR11 (PC160) W/DIP O.D. HDPE PIPE SHALL BE HEAT FUSED BY PERSONNEL AND EQUIPMENT APPROVED BY THE PIPE REPRESENTATIVE AND BE PROVIDED WITH MJ ADAPTERS (RATED 160 PSI) FOR ELECTRO FUSION APPLICATION. ALL GRAVITY SEWER AND FORCEMAIN PIPE SHALL BE COLOR-CODED GREEN FOR IDENTIFICATION.
5. PROVIDE ENGINEER WITH AS-BUILT SEWAGE COLLECTION SYSTEM INFORMATION FROM A FLORIDA REGISTERED PROFESSIONAL LAND SURVEYOR, AT NO ADDITIONAL COST TO THE OWNER, AS FOLLOWS:
   HORIZONTAL LOCATION OF FORCE MAIN AND ANY SIGNIFICANT CHANGE IN ELEVATION (COVER)
   DISTANCE BETWEEN MANHOLES
   MANHOLE & SERVICE LATERAL LOCATIONS FROM DOWNSTREAM MANHOLE INVERT, MANHOLE RIM AND SERVICE WYE ELEVATIONS
   CLEARANCE BETWEEN GRAVITY OR PRESSURE SEWERS AND WATERMAINS COMPUTED SEWER SLOPES
   THE SEWER AS-BUILT INFORMATION IS DUE PRIOR TO PAVING AND SODDING. CONTRACTOR SHALL PROVIDE SURVEYOR 24-HOUR NOTICE IN ORDER TO OBTAIN ESSENTIAL LOCATIONS AND ELEVATIONS.
6. VENTILATE PIPE DURING CONSTRUCTION AS REQUIRED TO ELIMINATE REFRACTION ERRORS IN SETTING ELEVATIONS.
7. PROVIDE FERNCO COUPLINGS, OR APPROVED EQUAL, AT ALL CONNECTIONS OF PVC TO D.I. SEWER PIPE.
8. COMPACTION OF BACKFILL WILL BE TESTED TO 98% OF AASHTO T-180 UNDER ROADWAYS, 95% OF AASHTO T-180 UNDER OPEN AREAS.
9. WET WELL VENT SHALL BE BY REX-BAC-T POLYOK POLY-AIR PCF-PLVF 4" ACTIVATED CARBON STACK FILTER FOR ODOR CONTROL, OR APPROVED EQUAL.
10. DEFLECTION TESTS: TESTING GRAVITY PIPE IS REQUIRED AFTER THE FINAL BACKFILL HAS BEEN IN PLACE FOR AT LEAST 30 DAYS TO PERMIT STABILIZATION OF THE SOIL-PIPE SYSTEM. TEST PIPE USING A RIGID BALL OR MANDREL FOR THE DEFLECTION TEST WITH A DIAMETER OF NOT LESS THAN 95.0% OF THE BASE INSIDE DIAMETER OF THE PIPE SPECIFIED IN THE APPENDIX TO ASTM D3034. THE TEST DEVICE SHALL BE PULLED THROUGH BY HAND.
11. PLUG UNUSED SANITARY SEWER SERVICES AND MAINS.
12. CONTRACTOR SHALL NOTIFY CONTRACTING OFFICER PRIOR TO REMOVAL OF SANITARY SEWER PIPE OR ELECTRICAL SYSTEM COMPONENTS IN ORDER FOR NOTICES OF SERVICE OUTAGE TO BE DELIVERED. WORK SEQUENCE SHALL BE PLANNED SO AS TO MINIMIZE UTILITY SERVICE OUTAGES.
13. ALL PLUG VALVES SHALL BE PROVIDED WITH A SERVICE GEAR CAPABLE OF HOLDING AT LEAST 100 PSI TEST PRESSURE FROM BOTH DIRECTIONS; BURIED AND ABOVEGROUND VALVES SHALL BE EQUIPPED WITH 2" NUT ACTUATOR.
14. PVC FITTINGS ARE PREFERRED, ANY D.I. FITTINGS USED INSIDE WET WELL SHALL BE FUSION BONDED EPOXY (FBE) COATED.

LIFT STATION ELEVATIONS:

TOP OF STATION	=	5.35' ±
PROPOSED 4" SS W. INV.	=	1.75'
HIGH WATER ALARM	=	1.75'
LAG PUMP ON	=	1.25'
LEAD PUMP ON	=	0.75'
PUMPS OFF	=	-0.55'
SUMP INVERT	=	-2.35'

PUMP SELECTION:

(2) SUBMERSIBLE HYDROMATIC S3HVX, OR APPROVED EQUAL,
3.0-HP, 3.75" DIA IMPELLER, 3450 RPM,
208-V, 3-Ph, 60-Hz,
MIN. SHUTOFF HEAD = 40.0'

DESIGN CONDITIONS:

PROPOSED FORCE MAIN 365 LF 4" FM FROM L.S. 725 TO EXIST. SS MH B-11
PRIMARY OPERATING CONDITION
SYSTEM CURVE:

	50 GPM @ 11.9' HEAD
	75 GPM @ 14.1' HEAD
DESIGN POINT	100 GPM @ 17.0' HEAD
	125 GPM @ 20.5' HEAD
	150 GPM @ 24.7' HEAD

ELEVATION	LIFT STATION 725	SET POINT HEIGHTS
"A"	5.35' ±	--
"B"	1.75'	--
"C"	1.75'	4.10'
"D"	1.25'	3.60'
"E"	0.75'	3.10'
"F"	(-) 0.55'	1.80'
"G"	(-) 2.35'	0.00'
"H"	(-) 3.30'	--

ENGINEER OF RECORD: DAVID A. LAVENDER
LICENSE NUMBER: 66400
NAME AND ADDRESS OF BUSINESS:
ALLEN ENGINEERING, INC.
106 DIXIE LANE (P.O. BOX 321321)
COCOA BEACH, FLORIDA 32932-1321
OFFICE: (321) 783-7443 - FAX: (321)783-5902
E-MAIL: INFO@ALLENENG.NET
FL C.A. # LB 266
AEI #: 170051
RAEIS CONTRACT NO: FA2521-13-D-0005-18F0039

DEPARTMENT OF THE AIR FORCE

DATE: 2/13/2018
DESIGNED BY: D. LAVENDER
DRAWN BY: D. ARTZNER
REVIEWED BY: C. HARTNETT
SUBMITTED BY: G. BEARD
SXHT 16-1100
DELIVERY NO. FA2521-13-0005 18F0039
AS BUILT DATE: ####

USAF 45TH CIVIL ENGINEER SQUADRON PAFB, FL
CONTRACT NO.: FA2521-13-D-0005 - 18F0039

RAEIS OTIE GP STRATEGIES AMRC ALLEN Engineering, Inc.

SXHT 16-1100
REPAIR / REPLACE LIFT STATION 725
LIFT STATION 725 DETAILS AND NOTES

SHEET IDENTIFICATION
C-501

X:\SXHT\16-1100 Repair-Replace Lift Station 725\DWG\16-1100 C-501.dwg, 2/14/2018 11:40:13 AM

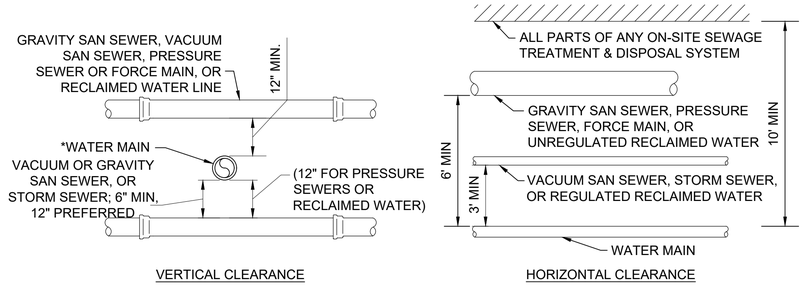

* AT UTILITY CROSSINGS, ONE FULL LENGTH OF EACH UTILITY PIPE SHALL BE CENTERED AT THE CROSSING.

* PREFERRED LOCATION OF WATER MAIN IS ABOVE SANITARY HAZARD.

TYPICAL REQUIRED SEPARATION FROM SANITARY HAZARDS (G / C-502)

SCALE: NONE

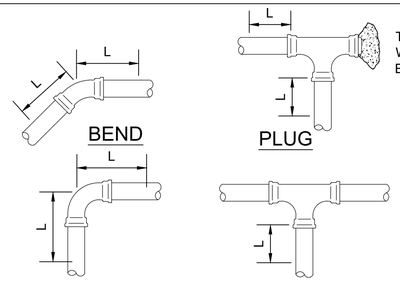

FITTING	NOMINAL PIPE SIZE				
	4"	6"	8"	10"	12"
TEE/PLUG	58	82	102	120	145
VERTICAL OFFSET (UPPER/LOWER)	24/5	34/8	45/10	54/12	63/14
11.25° BEND	2	3	4	5	6
22.5° BEND	4	6	8	10	11
45° BEND	8	12	16	19	22
90° BEND	19	29	38	45	53
THRUST BLOCK,SF	2	3	5	8	10.5

REQUIRED LENGTH OF RESTRAINT (FT.) FOR FITTINGS (J / C-502)

SCALE: NONE

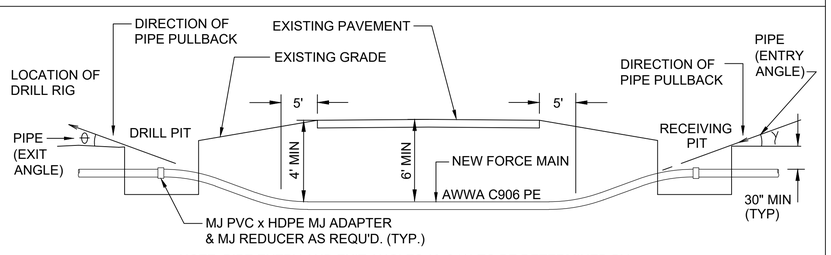

NOTE: PIPE ENTRY AND EXIT ANGLES (θ & γ) TO BE DETERMINED BY CONTRACTOR TO ACQUIRE REQUIRED MINIMUM PIPE DEPTH

SPECIFIC LOCATIONS FOR HORIZONTAL DIRECTIONAL DRILL INSTALLATIONS ARE SHOWN ON THE PLANS, THOSE LOCATIONS AND OTHERS IF DESIRED FOR PAVEMENT CROSSING OR OTHER LIMITED IMPACT AREAS, THE CONTRACTOR SHALL SUBMIT A HDD PLAN AND PROFILE TO THE CONTRACTING OFFICER AND ENGINEER FOR APPROVAL PRIOR TO STARTING THE WORK. HDPE PIPE SHALL BE AWWA C906 POLYETHYLENE PRESSURE PIPE FOR WATER DISTRIBUTION MANUFACTURED FROM PE MATERIAL MEETING ASTM D3350 AND COMPLYING WITH STANDARD DESIGNATION PE 4710, DR 11, DIP O.D., PRESSURE CLASS 160 PSI. PIPE SHALL BE PLEXCO, DRISCO PIPE, OR APPROVED EQUAL PIPE SHALL HAVE GREEN STRIPES; OR BE SOLID GREEN IN COLOR. INSTALL TWO #10 UF LOCATOR WIRES WITHOUT SPLICES WITH DIRECTIONALLY BORED PIPE. PIPE SHALL BE JOINED BY FUSION INTO A SINGLE LENGTH OF PIPE. FUSION SHALL BE PERFORMED BY A PERSON AND WITH EQUIPMENT BOTH APPROVED BY THE FLORIDA REPRESENTATIVE OF THE PIPE MANUFACTURER. FUSED COUPLINGS SHALL BE FRIATEC, OR APPROVED EQUAL.

TYPICAL HORIZONTAL DIRECTIONAL DRILL (HDD) DETAIL (L / C-502)

SCALE: NONE

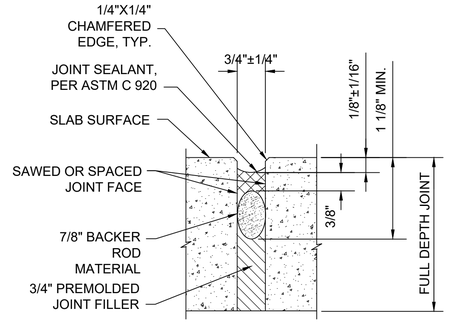

EXPANSION JOINT (H / C-502)

SCALE: NONE

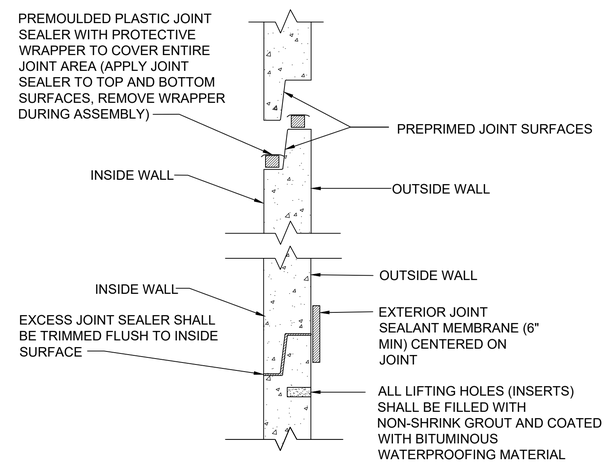

MANHOLE & WET WELL BARREL JOINT (K / C-502)

SCALE: NONE

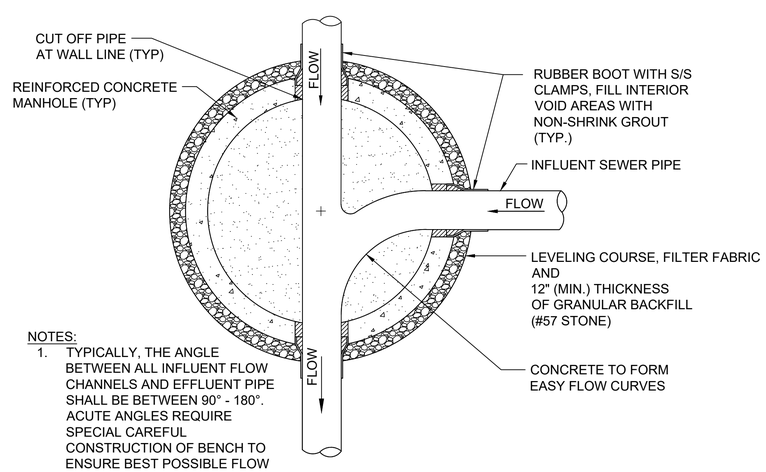

NOTES:

1. TYPICALLY, THE ANGLE BETWEEN ALL INFLUENT FLOW CHANNELS AND EFFLUENT PIPE SHALL BE BETWEEN 90° - 180°. ACUTE ANGLES REQUIRE SPECIAL CAREFUL CONSTRUCTION OF BENCH TO ENSURE BEST POSSIBLE FLOW CHANNEL AND DROP.

MANHOLE INVERT BENCH (M / C-502)

SCALE: NONE

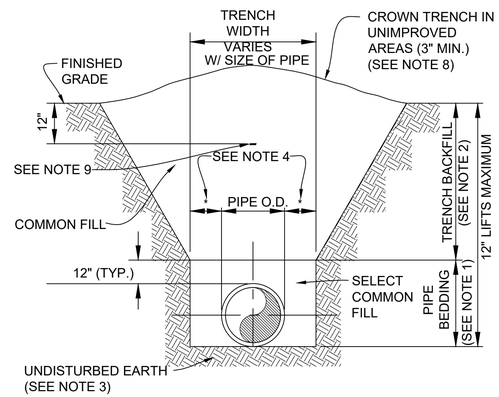

NOTES:

1. PIPE BEDDING: SELECT COMMON FILL COMPACTED TO 98% OF THE MAXIMUM DENSITY AS PER AASHTO T-180, EVERY 500'.
2. TRENCH BACKFILL: COMMON FILL COMPACTED TO 98% OF THE MAXIMUM DENSITY AS PER AASHTO T-180, EVERY 500'.
3. PIPE BEDDING UTILIZING SELECT COMMON FILL OR BEDDING ROCK IN ACCORDANCE WITH TYPE A BEDDING AND TRENCHING DETAIL MAY BE REQUIRED AS DIRECTED BY THE ENGINEER.
4. (*): 15" MAX. FOR PIPE DIAMETER LESS THAN 24", AND 24" MAX. FOR PIPE DIAMETER 24" AND LARGER.
5. WATER SHALL NOT BE PERMITTED IN THE TRENCH DURING CONSTRUCTION.
6. ALL PIPE TO BE INSTALLED WITH BELL FACING UPSTREAM TO THE DIRECTION OF THE FLOW FOR SEWERS.
7. REFER TO SPECIFICATIONS FOR SHEETING AND BRACING IN EXCAVATIONS.
8. FINAL RESTORATION IN IMPROVED AREAS SHALL BE IN COMPLIANCE WITH SPECIFICATIONS. ROAD SURFACE RESTORATION SHALL COMPLY WITH SPECIFICATIONS.
9. DETECTABLE TYPE MARKER TAPE WITH A 0.35 MIL THICK METALLIC FOIL CORE PLACED AT 12" BELOW FINISHED GRADE.

TYPE "B" BEDDING AND TRENCHING DETAIL (I / C-502)

SCALE: NONE

ENGINEER OF RECORD: DAVID A. LAVENDER
LICENSE NUMBER: 66400
NAME AND ADDRESS OF BUSINESS:
ALLEN ENGINEERING, INC.
106 DIXIE LANE (P.O. BOX 321321)
COCOA BEACH, FLORIDA 32932-1321
OFFICE: (321) 783-7443 - FAX: (321)783-5902
E-MAIL: INFO@ALLENENG.NET
FL C.A. # LB 266
AEI #: 170051
RAEIS CONTRACT NO: FA2521-13-D-0005-18F0039

DEPARTMENT OF THE AIR FORCE

DESIGNED BY: D. LAVENDER	DATE: 2/13/2018
DRAWN BY: D. ARTZNER	SXHT 16-1100
REVIEWED BY: C. HARTNETT	DELIVERY NO. FA2521-13-D-0005 18F0039
SUBMITTED BY: G. BEARD	AS BUILT DATE: ####

USAF 45TH CIVIL ENGINEER SQUADRON PAFB, FL

CONTRACT NO.: FA2521-13-D-0005 - 18F0039

RAEIS OTIE GP STRATEGIES AMRC ALLEN Engineering,Inc.

RANGE ARCHITECT-ENGINEER, INSPECTION SERVICES

SXHT 16-1100

REPAIR / REPLACE LIFT STATION 725

SANITARY SEWER DETAILS

SHEET IDENTIFICATION

C-502

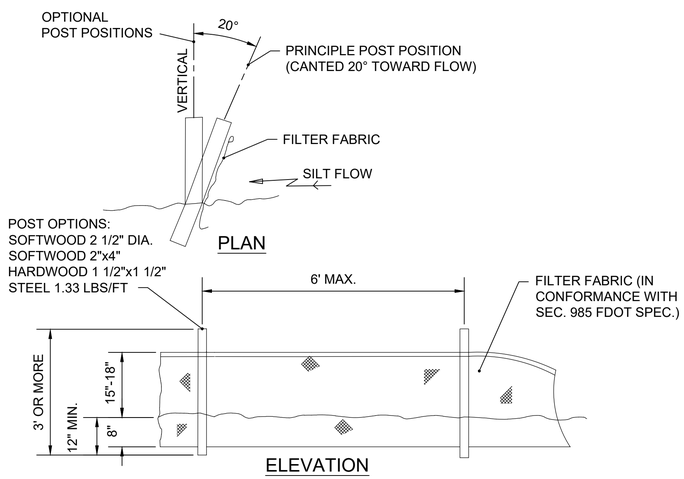

SILT FENCE DETAIL (N / C-503)

SCALE: NONE

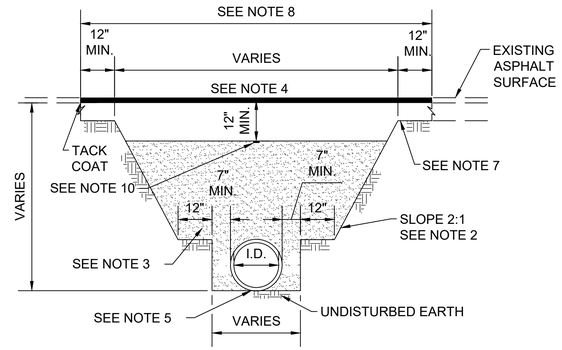

NOTES:

1. ASPHALT SHALL BE ASPHALTIC CONCRETE SUPERPAVE SP-12.5; CONCRETE SHALL BE 3000 PSI MIN.
2. A SLOPE OF 2:1 RATIO SHALL BE USED ONLY WHEN SOIL CONDITIONS DO NOT ALLOW VERTICAL TRENCHING.
3. COMPACTED BACKFILL MATERIAL SHALL BE FREE OF ASPHALT, LARGE ROCKS (1-1/2" DIAMETER MAXIMUM), WOOD, ROOTS AND OTHER ORGANIC MATTER.
4. NEW ASPHALT SURFACE SHALL BE 2" IN THICKNESS, MINIMUM, OR MATCH EXISTING THICKNESS FOR CONCRETE PAVEMENT.
5. CONTRACTOR SHALL EXCAVATE BOTTOM OF TRENCH TO ALLOW FOR BELL SECTION OF PIPE.
6. BACKFILL SHALL BE COMPACTED BENEATH THE HAUNCHES OF THE PIPE USING MECHANICAL TAMPS. THIS COMPACTION APPLIES TO THE MATERIAL PLACED BENEATH THE HAUNCHES OF THE PIPE AND ABOVE ANY BEDDING REQUIRED. COMPACTION SHALL BE DONE IN 3" LAYERS. BACKFILL SHALL BE COMPACTED TO 98% MAXIMUM DENSITY UNDER ROADS, CURB AND GUTTER, OR 95% MAXIMUM DENSITY IN SHOULDERS AND OUTSIDE ROAD RIGHT OF WAY. MAXIMUM DENSITY SHALL BE AS DETERMINED BY THE MODIFIED PROCTOR COMPACTION TEST, AASHTO T-180, EVERY 500'.
7. REPLACED BASE MATERIAL OVER TRENCH SHALL BE TWICE THE THICKNESS OF THE ORIGINAL BASE, OR 12" MINIMUM.
8. ASPHALT CONCRETE PAVEMENT JOINTS SHALL BE MECHANICALLY SAWED. SURFACE TREATED PAVEMENT JOINTS SHALL BE LAPPED AND FEATHERED.
9. BASE MATERIALS SHALL BE EITHER OF THE SAME TYPE AND COMPOSITION AS THE MATERIALS REMOVED OR EQUAL OR GREATER STRUCTURAL ADEQUACY. BASE MATERIAL SHALL BE COMPACTED TO 100% MAXIMUM DENSITY DETERMINED BY AASHTO T-180, EVERY 500'.
10. DETECTABLE TYPE MARKER TAPE WITH A 0.35 MIL THICK METALLIC FOIL CORE PLACED AT 12" BELOW FINISHED GRADE.

TYPICAL PAVEMENT RESTORATION FOR PARKING LOTS AND DRIVEWAYS DETAIL (O / C-503)

SCALE: NONE

NOTE: CONTRACTOR SHALL MODIFY THE CURB SHAPE AND DIMENSIONS TO TRANSITION AND MATCH UP WITH EXISTING CONCRETE CURB. THE LIMITS OF REPLACEMENT SHALL OCCUR AT NEAREST JOINT IN EXISTING CURB.

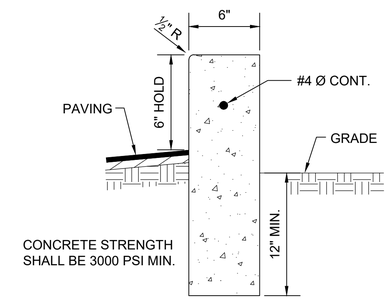

VERTICAL CURB DETAIL (P / C-503)

SCALE: NONE

ENGINEER OF RECORD: DAVID A. LAVENDER
LICENSE NUMBER: 66400
NAME AND ADDRESS OF BUSINESS:
ALLEN ENGINEERING, INC.
106 DIXIE LANE (P.O. BOX 321321)
COCOA BEACH, FLORIDA 32932-1321
OFFICE: (321) 783-7443 - FAX: (321)783-5902
E-MAIL: INFO@ALLENENG.NET
FL C.A. # LB 266
AEI #: 170051
RAEIS CONTRACT NO: FA2521-13-D-0005-18F0039

DEPARTMENT OF THE AIR FORCE

DESIGNED BY: D. LAVENDER	DATE: 2/13/2018
DRAWN BY: D. ARTZNER	SXHT 16-1100
REVIEWED BY: C. HARTNETT	DELIVERY NO. FA2521-13-D-0005 18F0039
SUBMITTED BY: G. BEARD	AS BUILT DATE: ####

USAF 45TH CIVIL ENGINEER SQUADRON PAFB, FL

CONTRACT NO.: FA2521-13-D-0005 - 18F0039

RAEIS OTIE — RANGE ARCHITECT-ENGINEER, INSPECTION SERVICES — An Lonoda Nation Company

GP STRATEGIES AMRC ALLEN Engineering, Inc.

SXHT 16-1100

REPAIR / REPLACE LIFT STATION 725

CIVIL DETAILS

SHEET IDENTIFICATION

C-503

ELECTRICAL NOTES:

1. IT IS THE INTENT OF THESE CONTRACT DRAWINGS TO PROVIDE A COMPLETE AND WORKABLE FACILITY.

2. DESIGN DRAWINGS ARE DIAGRAMMATIC AND DO NOT SHOW ALL OFFSETS, BENDS, ELBOWS, OR OTHER SPECIFIC ELEMENTS THAT MAY BE REQUIRED FOR PROPER INSTALLATION OF THE WORK. SUCH WORK SHALL BE VERIFIED AT THE SITE. ADDITIONAL BENDS, OFFSETS, AND CONDUIT AS REQUIRED BY VERTICAL AND HORIZONTAL EQUIPMENT LOCATIONS OR OTHER JOB CONDITIONS, SHALL BE PROVIDED TO COMPLETE THE WORK AT NO ADDITIONAL COST TO THE GOVERNMENT.

3. EXCEPT WHERE SHOWN IN DIMENSIONAL DETAIL, THE LOCATIONS OF EQUIPMENT SHOWN ON PLANS ARE APPROXIMATE. SUCH ITEMS SHALL BE PLACED TO ELIMINATE INTERFERENCE WITH OTHER EQUIPMENT. THE EXACT LOCATIONS SHALL BE DETERMINED IN THE FIELD.

4. ALL WORK SHALL BE IN ACCORDANCE WITH THE 2017 EDITION OF THE NATIONAL ELECTRICAL CODE NFPA 70. ALL ELECTRICAL WORK SHALL ALSO BE IN ACCORDANCE WITH NFPA 820 (STANDARD FOR FIRE PROTECTION IN WASTEWATER TREATMENT AND COLLECTION FACILITIES).

5. MATERIALS SHALL BE LISTED BY THE UNDERWRITER'S LABORATORIES, INC. OR ANOTHER APPROVED/CERTIFIED TESTING LABORATORY. SHOULD PLANS AND CODES CONFLICT, CONTACT THE CONTRACTING OFFICER. MAKE NO CHANGES, EVEN IN CASE OF CONFLICT, WITHOUT FIRST OBTAINING THE APPROVAL OF THE CONTRACTING OFFICER.

6. A GREEN, COPPER GROUND WIRE SHALL BE INSTALLED IN ALL CONDUIT SYSTEMS AND SHALL BE BONDED TO ALL ENCLOSURES, BOXES, AND EQUIPMENT. RECEPTACLES WITH GREEN WIRE SHALL BE BONDED TO BOX THEN TO RECEPTACLE SUCH THAT REMOVAL OF RECEPTACLE DEVICE SHALL NOT INTERRUPT GREEN WIRE BOND TO METALLIC BOX OR ENCLOSURE.

7. BONDING JUMPERS SHALL BE USED TO BOND CONDUIT TO ENCLOSURES, BOXES, AND EQUIPMENT WHERE CONCENTRIC OR ECCENTRIC KNOCKOUTS ARE USED.

8. EQUIPMENT SIZES INDICATED ARE MINIMUM, BEFORE INSTALLING ANY WIRE OR CONDUIT, THE CONTRACTOR SHALL OBTAIN THE EXACT EQUIPMENT REQUIREMENTS AND SHALL INSTALL WIRE, CONDUIT, CIRCUIT BREAKERS AND OTHER ITEMS OF THE CORRECT SIZE FOR THE EQUIPMENT ACTUALLY INSTALLED. HOWEVER, WIRE AND CONDUIT SIZES FOR THE EQUIPMENT SHALL BE TAKEN AS A MINIMUM AND SHALL NOT BE REDUCED WITHOUT WRITTEN APPROVAL.

9. THE INSTALLATION OF THE ELECTRICAL WORK SHALL BE COORDINATED WITH THE WORK OF THE OTHER TRADES.

10. THE INSTALLATION SHALL BE ACCOMPLISHED BY WORKERS SKILLED IN THIS TYPE OF WORK. THE INSTALLATION SHALL BE MADE SO THAT THERE IS NO DEGRADATION OF THE DESIGNED FIRE RATINGS.

11. THE CONTRACTOR SHALL INSTALL HIS WORK IN SUCH A MANNER AND AT SUCH A TIME AS WILL REQUIRE A MINIMUM OF CUTTING AND PATCHING OF THE BUILDING STRUCTURE.

12. 'PROVIDE', AS USED HERE ON THE DRAWINGS, IS AN ALL-INCLUSIVE TERM REQUIRING CONTRACTOR TO FURNISH, INSTALL, WIRE, AND CONNECT ALL SPECIFIED EQUIPMENT AS WELL AS COMPONENTS, ACCESSORIES, WIRING, AND MOUNTING HARDWARE TO INSURE THAT SPECIFIED EQUIPMENT FUNCTIONS TO MEET SYSTEM(S) REQUIREMENTS.

13. WHERE NEW-TO-EXISTNG CONNECTIONS ARE INDICATED, THE CONTRACTOR SHALL PROVIDE ALL MATERIALS (JUNCTION BOXES, CONDUIT, WIRE, AND CONNECTIONS) AND LABOR REQUIRED TO MAKE THE CONNECTIONS.

14. UNLESS OTHERWISE NOTED, ALL POWER CIRCUIT CONDUCTORS SHALL BE COPPER AND MINIMUM #12AWG. CONDUITS SHALL BE 3/4" MINIMUM.

15. IT SHALL BE THE RESPONSIBILITY OF THE CONTRACTOR TO PROTECT EXISTING UTILITIES FROM DAMAGE. THE CONTRACTOR SHALL BEAR ALL EXPENSE FOR REPAIR OR REPLACEMENT OF THE UTILITIES OR OTHER PROPERTY DAMAGED BY OPERATIONS IN CONJUNCTION WITH THE COMPLETION OF THIS WORK.

16. ALL BOLTS, NUTS, WASHERS, ETC. USED FOR GROUNDING AND BONDING CONNECTIONS SHALL BE COPPER. CONTRACTOR SHALL UTILIZE CONNECTORS TO PREVENT GALVANIC ACTION.

17. FINAL ACCEPTANCE WILL DEPEND UPON SATISFACTORY PERFORMANCE OF EQUIPMENT. NO CONDUCTOR SHALL BE ENERGIZED UNTIL THE INSTALLATION HAS BEEN APPROVED.

18. CONDUITS SHALL BE SUPPORTED BY SUITABLE CLAMPS, HANGERS OR STRAPS TO PROVIDE A RIGID INSTALLATION. CONDUIT SUPPORTS SHALL NOT BE FASTENED OR ATTACHED TO OTHER PIPES. PERFORATED STRAP HANGERS WILL NOT BE ALLOWED. EMPTY CONDUIT SHALL BE THOROUGHLY SWABBED OUT WITH DRY SWAB TO REMOVE MOISTURE AND DEBRIS BEFORE WIRE IS DRAWN IN. END OF CONDUIT SHALL BE TIGHTLY PLUGGED UNTIL WIRE IS PULLED. NO CONDUIT SHALL BE LOCATED TO IMPAIR THE STRENGTH OF STRUCTURAL MEMBERS. MAKE CHANGES IN DIRECTION OF RUNS WITH SYMMETRICAL BENDS. MAKE FIELD MADE BENDS AND OFFSETS WITH HICKEY OR CONDUIT BENDING MACHINE. DO NOT INSTALL CRUSHED OR DEFORMED CONDUITS. AVOID TRAPPED CONDUITS. PREVENT PLASTER, DIRT, OR TRASH FROM LODGING IN CONDUIT, BOXES, FITTINGS. FREE CLOGGED CONDUITS OF OBSTRUCTIONS.

19. IN ACCORDANCE WITH NFPA 70, GROUND EXPOSED, NON CURRENT CARRYING METALLIC PARTS OF ELECTRICAL EQUIPMENT, METALLIC RACEWAY SYSTEMS, GROUNDING CONDUCTOR IN METALLIC RACEWAYS.

20. FASTEN CONDUITS TO SHEET METAL BOXES AND CABINETS WITH TWO LOCKNUTS WHERE REQUIRED BY NFPA 70, WHERE INSULATED BUSHINGS ARE USED, AND WHERE BUSHINGS CANNOT BE BROUGHT INTO FIRM CONTACT WITH THE BOX; OTHERWISE, USE MINIMUM SINGLE LOCKNUT AND BUSHING. LOCKNUTS SHALL HAVE SHARP EDGES FOR DIGGING INTO WALLS OF METAL ENCLOSURE. INSTALL BUSHINGS ON ENDS OF CONDUITS, AND PROVIDE INSULATING TYPE WHERE REQUIRED BY NFPA 70.

21. PROVIDE AND INSTALL AT WALL OR FLOOR PENETRATIONS A PERMANENT FIRESTOP SYSTEM. THE SYSTEM SHALL CONSIST OF A WATER BASED FIRESTOP COMPOUND AS THE FILL, VOID, OR CAVITY MATERIAL ALONG WITH APPROPRIATE DAMMING MATERIAL (AS PER MANUFACTURER'S INSTRUCTIONS). THE FIRESTOP COMPOUND SHALL NOT CONTAIN ANY SOLVENTS, INORGANIC FIBERS, OR SILICONE COMPOUNDS AND SHALL NOT REQUIRE HEAT TO ACTIVATE THE SEAL. THE FIRESTOP COMPOUND SHALL BE ONE-PART MATERIALS, REQUIRING NO CRITICAL MIXING. THE PENETRATION SEAL MATERIAL MUST BE UNAFFECTED BY MOISTURE AND MUST MAINTAIN THE INTEGRITY OF THE FLOOR OR WALL ASSEMBLY FOR ITS RATED TIME PERIOD WHEN TESTED IN ACCORDANCE WITH ASTM E84. THE SYSTEM SHALL BE UL CLASSIFIED AND INSTALLED TO PROVIDE A 2 HOUR FIRE RATING. THE PENETRATION FIRE STOP MATERIAL SHALL BE FLAME-SAFE FS1900 SERIES COMPOUND AS MANUFACTURED BY GRACE CONSTRUCTION PRODUCTS OR EQUAL.

22. DEVICE PLATES FOR SWITCHES AND RECEPTACLES SHALL BE SUITABLY MARKED, SHOWING THE PANEL AND CIRCUIT NUMBER OF THE SOURCE. REQUIRED MARKING SHALL CONSIST OF A SELF-ADHESIVE LABEL HAVING 1/4 INCH EMBOSSED LETTERS.

23. DAMAGE DONE TO ZINC COATINGS OF GALVANIZED CONDUITS, BOXES AND FITTINGS, INCLUDING EXPOSED CONDUIT THREADS AND ZINC FINISHES SCRATCHING, SHALL BE REPAIRED BY CLEANING, PREPPING, AND COATING DAMAGED SURFACE WITH INORGANIC ZINC COMPOUND.

24. PROVIDE ELECTRICAL CONDUIT AS FOLLOWS:

    - RIGID GALVANIZED STEEL - ABOVE GRADE OUTSIDE OR IN HAZARDOUS LOCATIONS (CATEGORY 1, DIVISION 1 AND DIVISION 2 LOCATIONS)
    - RIGID GALVANIZED STEEL - INSIDE WHERE SUBJECT TO PHYSICAL DAMAGE
    - EMT - ABOVE GRADE INSIDE WHERE NOT SUBJECT TO PHYSICAL CHANGE
    - PVC SCHEDULE 40 - BELOW GRADE
    - PVC SCHEDULE 80 - WHERE SUBJECT TO PHYSICAL DAMAGE

    A. ALL EXPOSED ELECTRICAL CONDUIT VULNERABLE TO MECHANICAL DAMAGE SHALL BE RIGID GALVANIZED STEEL, UNLESS NOTED OTHERWISE. ALL OTHER CONDUIT INSIDE FACILITY SHALL BE ELECTRICAL METALLIC TUBING (EMT).

ELECTRICAL LEGEND

APPLIES TO ALL ELECTRICAL SHEETS; SOME SYMBOLS MAY NOT BE USED. DASHED SYMBOLS INDICATE DEMOLITION.

- BRANCH CIRCUIT CONDUIT RUN. ARROW INDICATES HOME RUN, MINIMUM CONDUIT SIZE SHALL BE 3/4". HOMERUNS LONGER THAN 100' SHALL USE MINIMUM #10 CONDUCTOR.
- EXISTING - TO REMAIN
- NEW - TO BE INSTALLED
- LIGHTNING 2/0 BARE COPPER CONDUCTOR
- GROUNDING CONDUCTOR, BELOW GRADE
- 208/120V PANELBOARD, 3 PHASE, 4 WIRE WITH GROUND
- 480/277V PANELBOARD, 3 PHASE, 4 WIRE WITH GROUND
- SERVICE DISCONNECT WITH LIGHTNING ARRESTOR
- GROUND ROD WITH EXOTHERMIC WELD

ABBREVIATIONS:

APPLIES TO ALL ELECTRICAL SHEETS

A	-	AMPERES, AMPS
A/C	-	AIR CONDITIONER
AFF	-	ABOVE FINISHED FLOOR
AHU	-	AIR HANDLING UNIT
AIC	-	AMPS INTERRUPTING CAPACITY
C	-	CONDUIT
CKT	-	CIRCUIT
CLG	-	CEILING
COMP	-	COMPRESSOR
COOR	-	CORRIDOR
CTRL	-	CONTROL
CU	-	COPPER
DOC	-	DOCUMENT
DISC	-	DISCONNECT SWITCH
DWG	-	DRAWING
ECB	-	ENCLOSED CIRCUIT BREAKER
ELEC	-	ELECTRIC
EMT	-	ELECTRICAL METALLIC TUBING
ETR	-	EXISTING TO REMAIN
EXST	-	EXISTING
FLA	-	FULL LOAD AMPS
FCU	-	FAN COIL UNIT
GFCI	-	GROUND FAULT CIRCUIT INTERRUPTER
GND	-	GROUND
HOA	-	HAND-OFF-AUTO SWITCH
HMI	-	HUMAN MACHINE INTERFACE
HP	-	HORSEPOWER
Hz	-	HERTZ
IAW	-	IN ACCORDANCE WITH
KCMIL	-	THOUSAND CIRCULAR MILS
KW	-	KILOWATT
LAN	-	LOCAL AREA NETWORK
LED	-	LIGHT EMITTING DIODE
LV	-	LOW VOLTAGE
MTS	-	MANUAL TRANSFER SWITCH
NIC	-	NOT IN CONTRACT
NTS	-	NOT TO SCALE
NTWK	-	NETWORK
PLC	-	PROGRAMMABLE LOGIC CONTROLLER
PNL	-	PANEL/PANELBOARD
PVC	-	POLYVINYL CHLORIDE
RGS	-	RIGID GALVANIZED STEEL
RM	-	ROOM
SPD	-	SURGE PROTECTION DEVICE
SS	-	STAINLESS STEEL
TYP	-	TYPICAL
UG	-	UNDERGROUND
UON	-	UNLESS OTHERWISE NOTED
UPS	-	UNINTERRUPTIBLE POWER SUPPLY
V	-	VOLTS
VD	-	VOLTAGE DROP
WP	-	WEATHERPROOF
XFMR	-	TRANSFORMER

DEPARTMENT OF THE AIR FORCE

DESIGNED BY: L. COLEMAN
DATE: 2/13/2018
DRAWN BY: G. BOGIATZIDIS
SXHT 16-1100
REVIEWED BY: C. HARTNETT
DELIVERY NO. FA2521-13-D-0005 18F0039
SUBMITTED BY: G. BEARD
AS BUILT DATE: ####

USAF 45TH CIVIL ENGINEER SQUADRON PAFB, FL

CONTRACT NO.: FA2521-13-D-0005 - 18F0039

RAEIS OTIE GP STRATEGIES AMRC ALLEN Engineering, Inc.

SXHT 16-1100

REPAIR / REPLACE LIFT STATION 725

ELECTRICAL NOTES, LEGEND AND ABBREVIATIONS

SHEET IDENTIFICATION

E-001

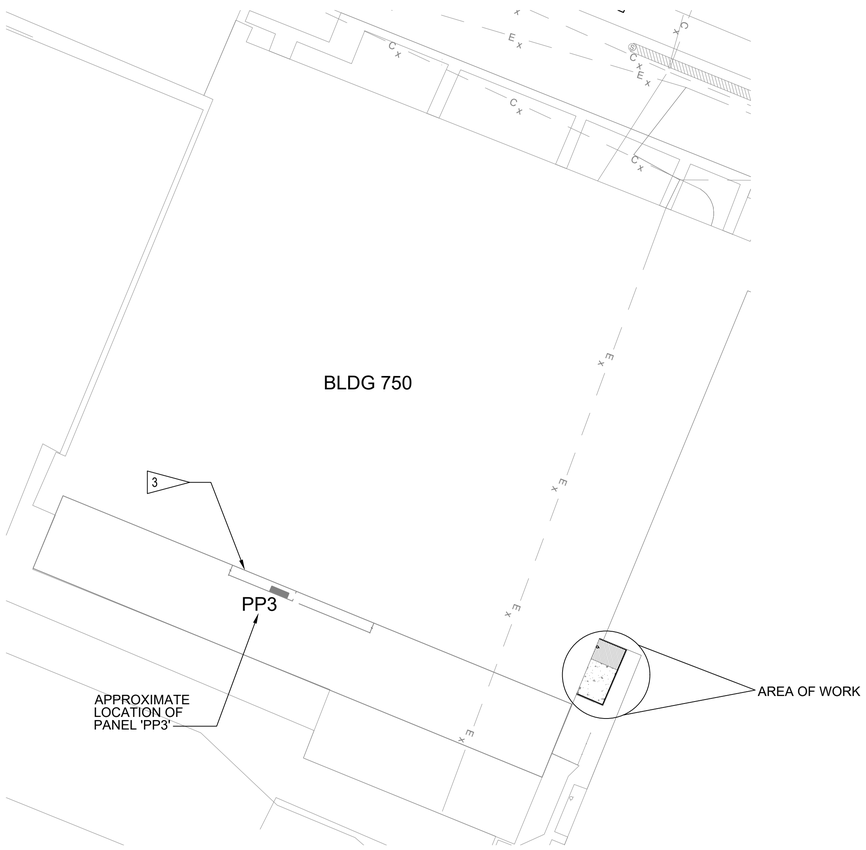

SITE PLAN - BLDG 750 & LIFT STATION 725

SCALE: 1" = 400'

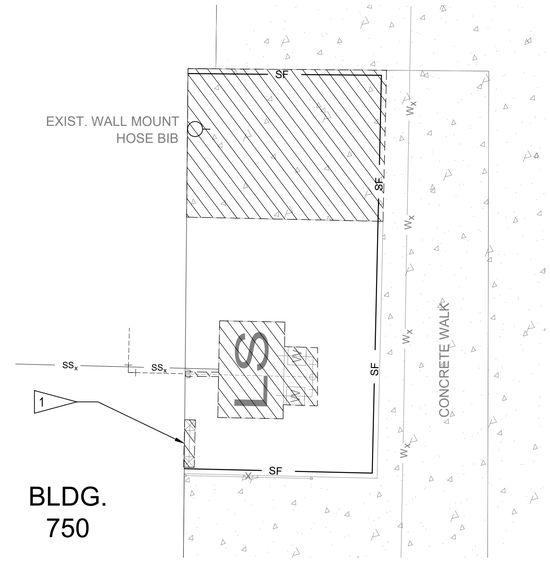

ELECTRICAL DEMO PLAN

SCALE: 1" = 5'

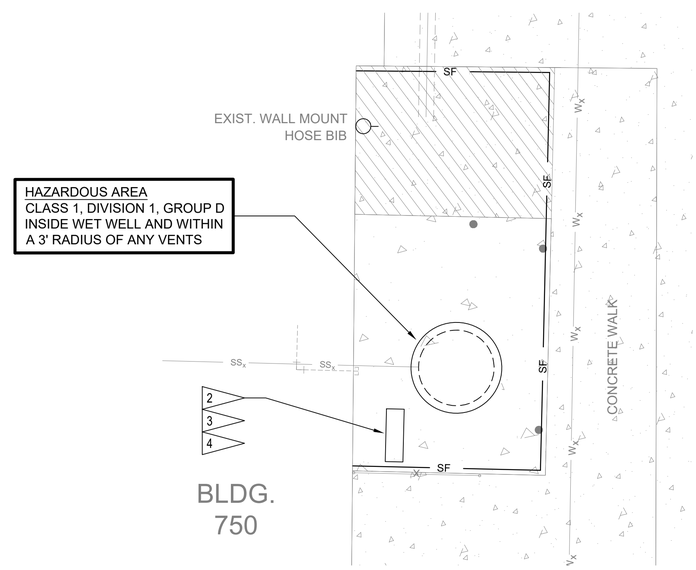

ELECTRICAL NEW CONSTRUCTION PLAN

SCALE: 1" = 5'

GENERAL NOTES:

1. HAZARDOUS LOCATIONS REQUIREMENTS ARE AS FOLLOWS:
   - CLASS 1 DIV 1: ENTIRE SPACE WITHIN ANY TRENCH
   - CLASS 1 DIV 2: UP TO 18 INCHES ABOVE THE FLOOR LEVEL
   - UNCLASSIFIED: AREAS GREATER THAN 18 INCHES ABOVE THE FLOOR LEVEL OF THE HANGAR
2. CONDUIT ENTERING OR LEAVING THE TRENCH SHALL HAVE AN EXPLOSION PROOF SEAL FITTING INSTALLED APPROXIMATELY 18" AFF.
3. COORDINATE ALL WORK WITH CIVIL DRAWINGS.
4. EXISTING LIFT STATION CONTROL PANEL LABEL INDICATES POWER FEED IS FROM EXISTING PANEL 'PP1'. SITE INVESTIGATION REVEALS PANEL 'PP1' IS LABELED AS PANEL 'PP3'. BRANCH CIRCUITS ARE THE SAME - 19,21,23. CONTRACTOR SHALL COORDINATE ACCESS TO SECURED CORRIDOR.

FLAG NOTES:

1. DISCONNECT POWER AND REMOVE EXISTING LIFT STATION CONTROL PANEL, INCLUDING CONDUIT AND WIRING BACK TO EXISTING PANEL 'PP3' IN SECURED CORRIDOR INSIDE FACILITY 750. REFER TO SHEET C-501 FOR INSTALLATION OF PUMPS AND FLOATS. REFER TO SHEET E-501 FOR CONTROL PANEL SUPPORT DETAIL AND SEAL OFF LOCATIONS.
2. PROVIDE NEW LIFT STATION CONTROL PANEL, DISCONNECT SWITCH AND HAZARDOUS AREA JUNCTION/DEMARCATION BOX CLASS 1, DIVISION 1. CONTROL PANEL SHALL INCLUDE REMOTE TERMINAL UNIT FOR FUTURE CONNECTION TO 'SCADA'. REFER TO DETAIL ON SHEET E-501.
3. PROVIDE NEW 40A BREAKER, (3) #8, (1) #10 GND IN 1" CONDUIT FROM EXISTING PANEL 'PP3' TO NEW LIFT STATION CONTROL PANEL FOR (2) 3 HP PUMP MOTORS AT 208V. NEW BREAKER SHALL BE COMPATIBLE WITH EATON/CUTLER-HAMMER PRL4 PANELBOARD. PANEL 'PP3' IS LOCATED IN SECURED CORRIDOR INSIDE FACILITY 750. CONDUIT ROUTING SHALL BE EXPOSED WITHIN HIGH-BAY AND ABOVE CEILING WITHIN SECURED CORRIDOR.
4. PROVIDE 1" CONDUIT FOR COMM CONNECTION FROM LIFT STATION CONTROL PANEL VIA LAN TO BASE NETWORK.

5' 0' 5' 10' 15'
GRAPHIC SCALE 1" = 5'

400' 0' 400' 800' 1200'
GRAPHIC SCALE 1" = 400'

DEPARTMENT OF THE AIR FORCE

DESIGNED BY: D. LAVENDER	DATE: 2/13/2018
DRAWN BY: D. ARTZNER	SXHT 16-1100
REVIEWED BY: C. HARTNETT	DELIVERY NO. FA2521-13-D-0005 18F0039
SUBMITTED BY: G. BEARD	AS BUILT DATE: ####

USAF 45TH CIVIL ENGINEER SQUADRON PAFB, FL

CONTRACT NO.: FA2521-13-D-0005 - 18F0039

RAEIS OTIE — RANGE ARCHITECT ENGINEER, INSPECTION SERVICES — An Oneida Nation Company

GP STRATEGIES AMRC ALLEN Engineering, Inc.

SXHT 16-1100

REPAIR / REPLACE LIFT STATION 725

ELECTRICAL DEMO, NEW CONSTRUCTION AND SITE PLAN

SHEET IDENTIFICATION

E-101

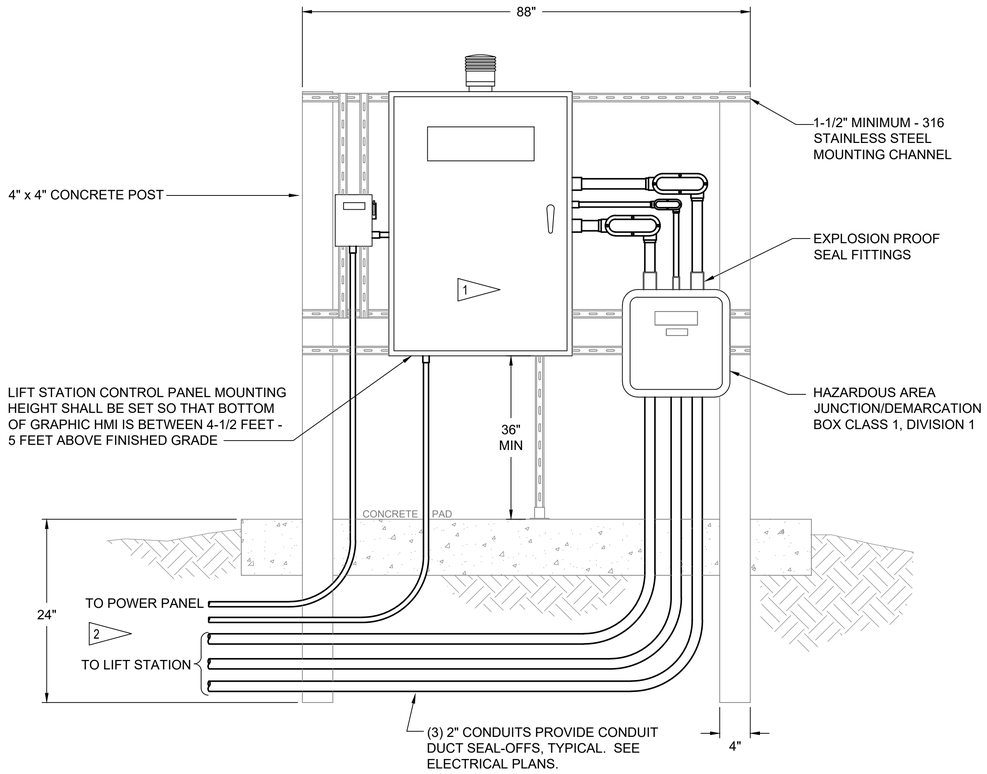

LIFT STATION CONTROL PANEL DETAIL

SCALE: NONE

GENERAL NOTES:

1. WIRING FOR PUMPS SHALL ROUTE TO THE DEMARCATION BOX, THEN TO THE LIFT STATION CONTROL PANEL. DEMARCATION BOX SHALL CONTAIN THERMAL BLOCKS ONLY. MAIN DISCONNECT SWITCH SHALL BE PROVIDED ON OUTSIDE OF LIFT STATION CONTROL PANEL IN A NEMA 4X STAINLESS STEEL ENCLOSURE.
2. DETAIL IS DIAGRAMMATIC. FIELD CONDITIONS SHALL DETERMINE DIRECTION OF CONDUITS.

FLAG NOTES:

1. PROVIDE PHENOLIC LABEL INDICATING LIFT STATION IS FED FROM PANEL 'PP3', CIRCUITS 19,21,23. LABEL SHALL BLACK WITH WHITE LETTERING.
2. PROVIDE 1" CONDUIT FOR FUTURE COMM USE. CONDUIT SHALL BE STUBBED-UP INTO BUILDING AND CAPPED.

DEPARTMENT OF THE AIR FORCE

DATE: 2/13/2018
DESIGNED BY: L. COLEMAN
DRAWN BY: G. BOGIATZIDIS
REVIEWED BY: C. HARTNETT
SUBMITTED BY: G. BEARD
SXHT 16-1100
DELIVERY NO. FA2521-13-0005 18F0039
AS BUILT DATE: ####

USAF 45TH CIVIL ENGINEER SQUADRON PAFB, FL

CONTRACT NO.: FA2521-13-D-0005 - 18F0039

RAEIS OTIE GP STRATEGIES AMRC ALLEN Engineering,Inc.

SXHT 16-1100

REPAIR / REPLACE LIFT STATION 725

LIFT STATION CONTROL PANEL DETAIL

SHEET IDENTIFICATION

E-501

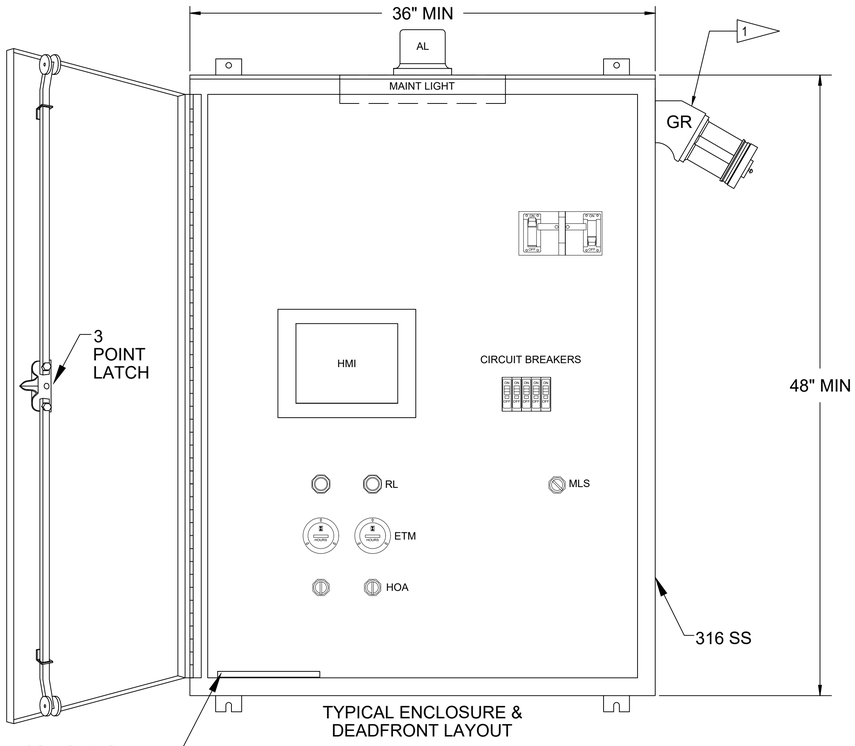

TYPICAL ENCLOSURE &
DEADFRONT LAYOUT

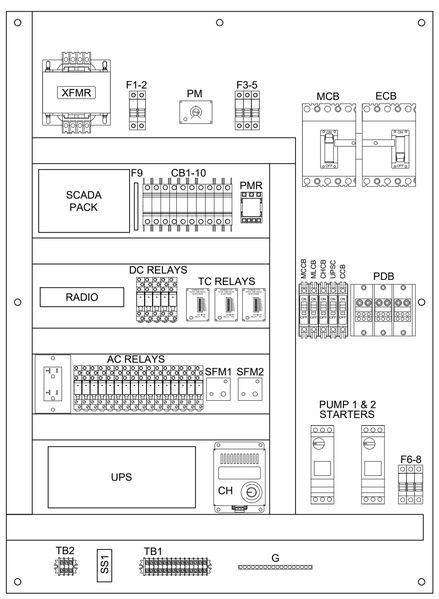

TYPICAL BASE PLATE LAYOUT

LIFT STATION 725 ENCLOSURE AND DEADFRONT LAYOUT (TYPICAL)
(SHOWN WITH OUTER DOOR REMOVED)

GENERAL NOTES:

1. THE HMI GRAPHIC DISPLAY SHALL BE 10" MAPLE SYSTEMS HMI1500L OR EQUAL. HMI GRAPHIC DISPLAY SHALL BE MOUNTED ON FRONT OF THE DEADFRONT DOOR. THE HMI GRAPHIC DISPLAY SHALL BE PROGRAMMED WITH FOUR (4) SCREENS: ALARM, TREND, MAIN AND PUMP CONTROL. THE DATA MUST BE TRANSFERRED TO THE SCADA SYSTEM VIA THE REMOTE TERMINAL UNIT (RF SCADA SYSTEM). PROVIDE A NEW REMOTE TERMINAL UNIT (ETHERNET LAN SYSTEM) FOR FUTURE CONNECTION OF THE CONTROL PANEL TO THE A SCADA NETWORK. SCADA/RTU/ETHERNET LAN COMPONENTS SHALL BE MOUNTED IN THE NEW CONTROL PANEL. SEE CONTROL SYSTEM SCHEMATIC DIAGRAMS FOR ADDITIONAL INFORMATION. PROVIDE ALL COMPONENTS REQUIRED FOR A FULLY FUNCTIONAL SYSTEM.
2. CONTROL ENCLOSURE SHALL BE NEMA 4X 316 STAINLESS STEEL. ENCLOSURE SHALL BE MINIMUM 48" x 36". DEPTH SHALL BE DETERMINED BY THE MANUFACTURER. BOTTOM OF CONTROL PANEL SHALL BE MINIMUM 36" ABOVE GROUND.
3. AS A MINIMUM, PROVIDE (2) RJ45 JACK (1) FOR NETWORK CONNECT AND (1) FOR LAPTOP CONNECTION.
4. SEE DRAWING E-501 FOR CONTROL PANEL SUPPORT DETAILS AND SEAL OFF LOCATIONS.
5. SEE DRAWING C-501 FOR INSTALLATION OF PUMPS AND FLOATS.
6. DETAILS ARE DIAGRAMMATIC AND MAY DIFFER FROM CONDITIONS.

FLAG NOTES:

1. 'GR' DENOTES GENERATOR RECEPTACLE.

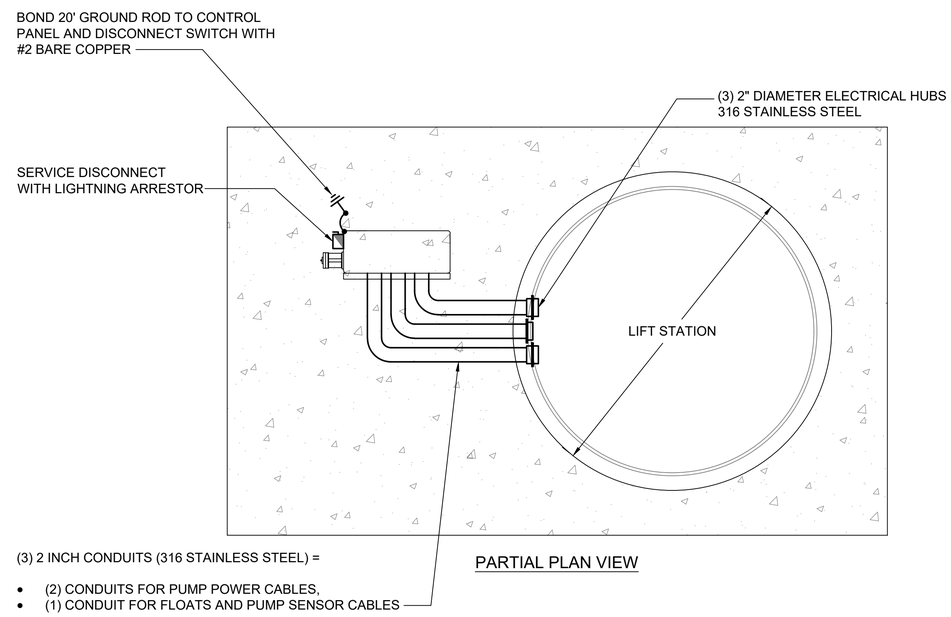

PARTIAL PLAN VIEW

LIFT STATION 725 DETAIL

SCALE: NONE

DEPARTMENT OF THE AIR FORCE

DATE: 2/13/2018
DESIGNED BY: L. COLEMAN
DRAWN BY: G. BOGIATZIDIS
REVIEWED BY: C. HARTNETT
SUBMITTED BY: G. BEARD
SXHT 16-1100
DELIVERY NO. FA2521-13-D-0005 18F0039
AS BUILT DATE: ####

USAF 45TH CIVIL ENGINEER SQUADRON PAFB, FL
CONTRACT NO.: FA2521-13-D-0005 - 18F0039

RAEIS RANGE ARCHITECT ENGINEER, INSPECTION SERVICES
OTIE An Olmsted Nutter Company
GP STRATEGIES
AMRC
ALLEN Engineering, Inc.

SXHT 16-1100
REPAIR / REPLACE LIFT STATION 725
ENCLOSURE AND DEADFRONT LAYOUT

SHEET IDENTIFICATION
E-502

GENERAL NOTES:

1. TERMINAL CONNECTION BOX SHALL BE MOUNTED BETWEEN THE CONTROL ENCLOSURE AND THE LIFT STATION PIT. THE TERMINAL CONNECTION BOX SHALL NOT CONTAIN RELAYS OR OTHER CONTROL DEVICES. THIS BOX SHOULD FUNCTION ONLY AS A TERMINAL CABINET.
2. TERMINAL CONNECTION BOX ENCLOSURE SHALL BE EXPLOSION PROOF CLASS 1, DIVISION 1, AND NEMA 4X CAST METAL (COPPER FREE ALUMINUM). ENCLOSURE SHALL BE MINIMUM OF 16" x 14". DEPTH SHALL BE DETERMINED BY THE MANUFACTURER.
3. PROVIDE SEAL FITTINGS IN CONDUITS THAT EXIT THE TERMINAL BOX AND EXTEND TO THE CONTROL CABINET. DO NOT USE SEAL FITTINGS IN CONDUITS THAT CONNECT THE TERMINAL BOX TO THE WET WELL.

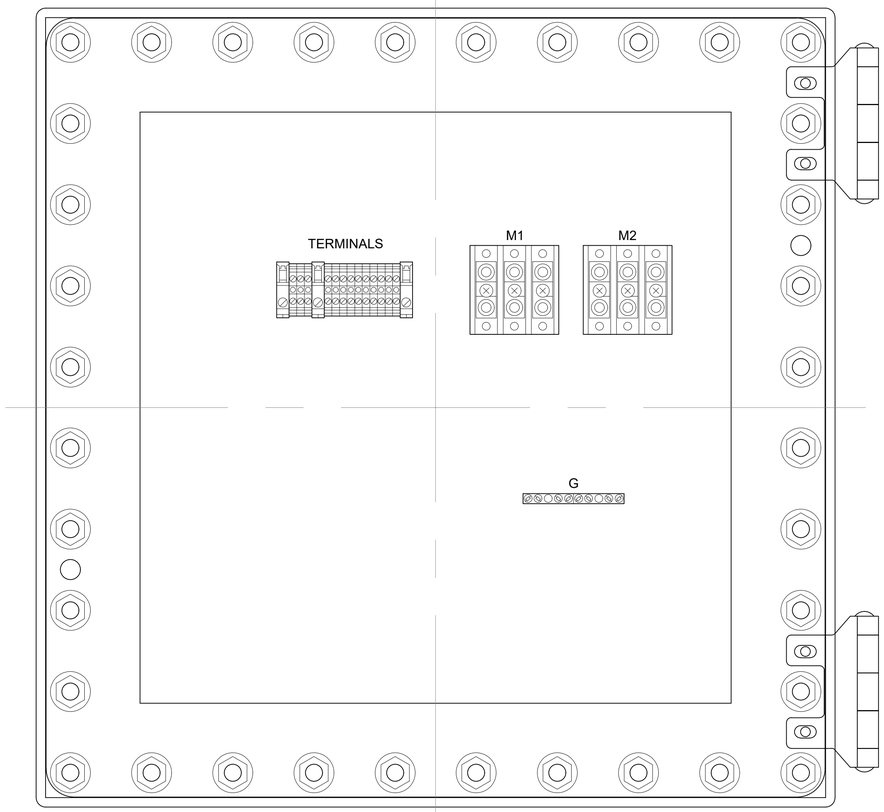

FRONT VIEW

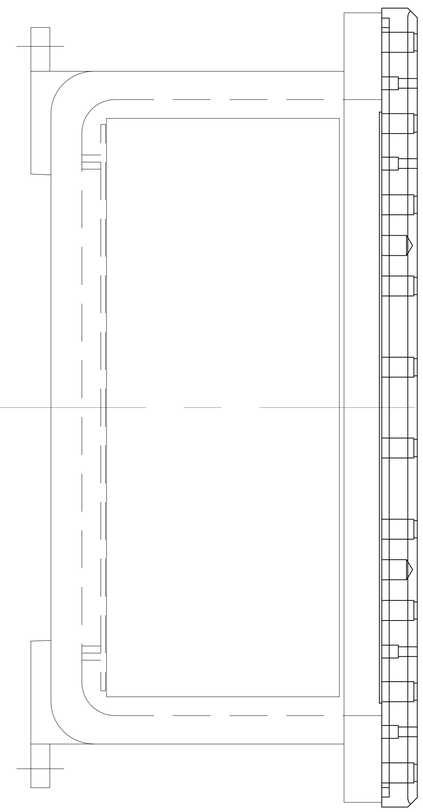

RIGHT SIDE VIEW

TERMINAL CONNECTION BOX DETAIL

SCALE: NONE

DEPARTMENT OF THE AIR FORCE

DESIGNED BY: L. COLEMAN	DATE: 2/13/2018
DRAWN BY: G. BOGIATZIDIS	SXHT 16-1100
REVIEWED BY: C. HARTNETT	DELIVERY NO. FA2521-13-0005 18F0039
SUBMITTED BY: G. BEARD	AS BUILT DATE: ####

USAF 45TH CIVIL ENGINEER SQUADRON PAFB, FL

CONTRACT NO.: FA2521-13-D-0005 - 18F0039

RAEIS OTIE GP STRATEGIES AMRC ALLEN Engineering,Inc.

RANGE ARCHITECT-ENGINEER, INSPECTION SERVICES

An Lockheed Martin Company

SXHT 16-1100

REPAIR / REPLACE LIFT STATION 725

LIFT STATION TERMINAL CONNECTION BOX DETAIL

SHEET IDENTIFICATION

E-503

X:\SXHT\16-1100 Repair-Replace Lift Station 725\DWG\16-1100_E-503.dwg, 2/14/2018 11:40:38 AM

LIFT STATION SEQUENCE OF OPERATIONS:

PUMPS OPERATE IN 2 MODES:

1. HOA IN HAND
2. HOA IN AUTO:
   - A. HAND FROM HMI
   - B. AUTO BASED ON LEVEL SENSING TRANSMITTER AND SETPOINTS.
   - C. AUTO BASED ON FLOATS (PLC OPERATIONAL)
   - D. AUTO BASED ON FLOATS (PLC NOT OPERATIONAL)

1. HOA IN HAND:

PUMP 1

1. PUMP 1 HOA TO HAND.
2. PUMP 1 STARTS UNLESS THERE IS AN OVERLOAD ON THE PUMP 1 STARTER, AN OVERTEMP ON PUMP 1, CB1 IS OPEN, OR THE WATER LEVEL IS BELOW THE LOW FLOAT.
3. PUMP 1 STOPS WHEN THE WATER LEVEL DROPS BELOW THE LOW FLOAT OR THE OPERATOR SWITCHES THE PUMP 1 HOA TO OFF.

PUMP 2

1. PUMP 2 HOA TO HAND.
2. PUMP 2 STARTS UNLESS THERE IS AN OVERLOAD ON THE PUMP 2 STARTER, AN OVERTEMP ON PUMP 2, CB2 IS OPEN OR THE WATER LEVEL IS BELOW THE LOW FLOAT.
3. PUMP 2 STOPS WHEN THE WATER LEVEL DROPS BELOW THE LOW FLOAT OR THE OPERATOR SWITCHES THE PUMP 2 HOA TO OFF.

2. HOA IN AUTO

A. HAND FROM HMI

PUMP 1

1. PUMP 1 HOA TO “AUTO”. PUMP 1 “HAND” CONTROL ON AT HMI.
2. PUMP 1 STARTS UNLESS THERE IS AN OVERLOAD ON THE PUMP 1 STARTER, AN OVERTEMP ON PUMP 1, CB1 IS OPEN OR THE WATER LEVEL IS BELOW THE LOW FLOAT.
3. PUMP 1 STOPS WHEN THE WATER LEVEL DROPS BELOW THE LOW FLOAT, THE OPERATOR SWITCHES THE HOA TO "OFF", OR PUSHES THE PUMP 1 "OFF" CONTROL BUTTON AT THE HMI.

PUMP 2

1. PUMP 2 HOA TO "AUTO". PUMP 2 HAND ON AT HMI.
2. PUMP 2 STARTS UNLESS THERE IS AN OVERLOAD ON THE PUMP 2 STARTER, AN OVERTEMP ON PUMP 2, CB2 IS OPEN OR THE WATER LEVEL IS BELOW THE LOW FLOAT.
3. PUMP 2 STOPS WHEN THE WATER LEVEL DROPS BELOW THE LOW FLOAT, THE OPERATOR SWITCHES THE HOA TO OFF, OR PUSHES THE PUMP 2 "OFF" CONTROL BUTTON AT THE HMI.

B. AUTO BASED ON LEVEL SENSING TRANSMITTER AND SETPOINTS.

SETPOINTS AND LEAD/LAG OPERATION

1. THE OPERATOR IS TO ENTER PUMPS LEAD/LAG OFF LEVEL SET POINT, LEAD LEVEL SET POINT, LAG LEVEL SET POINT, HI LEVEL ALARM OFF SET POINT, HI LEVEL ALARM ON SET POINT AND THE HI LEVEL ALARM/LAG PUMP ON TIME DELAY.
2. THE LEAD PUMP IS SELECTED AUTOMATICALLY BY THE PLC WHICH IS BASED ON PUMP RUN TIME AND AVAILABILITY (IN AUTO, NOT FAULTED AND STARTER BREAKER IS (CBI OR CB2) IS ON) THESE STATUSES ARE INDICATED ON THE HMI.

PUMP 1

1. PUMP 1 HOA TO “AUTO”. PUMP 1 “AUTO” CONTROL SET ON AT HMI.
2. WHEN PUMP 1 IS SELECTED AS LEAD BY THE PLC, PUMP 1 WILL START WHEN THE WATER LEVEL REACHES "LEAD LEVEL" SET POINT UNLESS THERE IS AN OVERLOAD ON THE PUMP 1 STARTER, AN OVERTEMP ON PUMP 1 OR, CB1 IS OPEN.
3. PUMP 1 WILL STOP WHEN THE WATER LEVEL DROPS TO "OFF LEVEL" SET POINT.
4. PUMP 1 WILL BECOME LAG AND PUMP 2 WILL BECOME LEAD THE NEXT TIME THE WATER LEVEL RISES IF PUMP 2 HAS LESS RUN TIME.
5. WHEN PUMP 1 IS LAG, PUMP 1 WILL START WHEN THE WATER LEVEL REACHES THE "LAG LEVEL" SET POINT UNLESS THERE IS AN OVERLOAD ON THE PUMP 1 STARTER, AN OVERTEMP ON PUMP 1, OR CB1 IS OPEN.
6. WHEN PUMP 1 IS LAG AND ALREADY STARTED, PUMP 1 WILL STOP WHEN THE WATER LEVEL DROPS TO THE “LEAD/ LAG OFF LEVEL” SET POINT.

PUMP 2

1. PUMP 2 HOA TO “AUTO”. PUMP 2 AUTO CONTROL ON AT HMI.
2. WHEN PUMP 2 IS SELECTED AS LEAD BY THE PLC, PUMP 2 WILL START WHEN THE WATER LEVEL REACHES “LEAD LEVEL” SET POINT UNLESS THERE IS AN OVERLOAD ON THE PUMP 2 STARTER, AN OVERTEMP ON PUMP 2, OR CB2 IS OPEN.
3. PUMP 2 WILL STOP WHEN THE WATER LEVEL DROPS TO “OFF LEVEL” SET POINT.
4. PUMP 2 WILL BECOME LAG AND PUMP 1 WILL BECOME LEAD THE NEXT CYCLE.
5. WHEN PUMP 2 IS LAG, PUMP 2 WILL START WHEN THE WATER LEVEL REACHES THE “LAG LEVEL” SET POINT UNLESS THERE IS AN OVERLOAD ON THE PUMP 2 STARTER, AN OVERTEMP ON PUMP 2, OR CB2 IS OPEN.
6. WHEN PUMP 2 IS LAG AND ALREADY STARTED, PUMP 2 WILL STOP WHEN THE WATER LEVEL DROPS TO THE “LEAD/LAG OFF LEVEL” SET POINT.

C. AUTO BASED ON FLOATS (PLC OPERATIONAL)

NOTE THIS MODE ONLY OCCURS, WHEN THE LEVEL SENSING TRANSMITTER FAILS AND THE PLC IS STILL OPERATIONAL.

PUMP 1

1. PUMP 1 HOA TO “AUTO”. PUMP 1 “AUTO” CONTROL ON AT HMI.
2. WHEN PUMP 1 IS LEAD, PUMP 1 WILL START WHEN THE WATER LEVEL REACHES THE HI FLOAT UNLESS CB1 IS OPEN, THERE IS AN OVERTEMP ON PUMP 1, OR THE PUMP 1 STARTER HAS AN OVERLOAD AT WHICH POINT PUMP 2 WILL START AS LEAD.
3. PUMP 1 WILL STOP WHEN THE WATER LEVEL DROPS TO THE LOW FLOAT.

PUMP 2 (LAG PUMP) BASED ON ACCUMULATED TIME AS DESCRIBED ABOVE.

1. PUMP 2 HOA TO “AUTO”. PUMP 2 “AUTO” CONTROL ON AT HMI.
2. WHEN PUMP 2 IS LAG, PUMP 2 WILL START WHEN THE WATER LEVEL STAYS ABOVE THE HI FLOAT FOR A TIME PERIOD THAT EXCEEDS THE “HI LEVEL ALARM/LAG PUMP ON TIME DELAY” ON THE HMI UNLESS CB2 IS OPEN, THERE IS AN OVERTEMP ON PUMP 2, OR THE PUMP 2 STARTER HAS AN OVERLOAD.
3. PUMP 2 WILL STOP WHEN THE WATER LEVEL DROPS TO THE LOW FLOAT.

D. AUTO BASED ON FLOATS (PLC NOT OPERATIONAL)

NOTE: THIS MODE ONLY OCCURS WHEN THE PLC FAILS.

PUMP 1

1. PUMP 1 HOA TO "AUTO".
2. PUMP 1 WILL START AS LEAD WHEN THE WATER LEVEL REACHES THE HI FLOAT UNLESS CB1 IS OPEN OR THE PUMP 1 STARTER HAS AN OVERLOAD AT WHICH POINT PUMP 2 WILL START AS LEAD.
3. PUMP 1 WILL STOP WHEN THE WATER LEVEL DROPS TO THE LOW FLOAT.

PUMP 2

1. PUMP 2 HOA TO "AUTO".
2. PUMP 2 WILL START AS LEAD WHEN THE WATER LEVEL REACHES THE HI FLOAT ONLY WHEN CB1 IS OPEN OR THE PUMP 1 STARTER HAS AN OVERLOAD. OTHERWISE, PUMP 2 WILL START AS LAG WHEN THE WATER LEVEL STAYS ABOVE THE HI FLOAT FOR A TIME PERIOD THAT EXCEEDS THE TIME PERIOD SET ON TIMER RELAY TDR1 WHICH IS SET TO 30 SECONDS (ADJUSTABLE) IN THE CONTROL PANEL. PUMP 2 WILL NOT START AT ALL IF CB2 IS OPEN OR THE PUMP 2 STARTER HAS AN OVERLOAD.
3. PUMP 2 WILL STOP WHEN THE WATER LEVEL DROPS TO THE LOW FLOAT.

DEPARTMENT OF THE AIR FORCE

DATE: 2/13/2018
DESIGNED BY: L. COLEMAN
DRAWN BY: G. BOGIATZIDIS
SXHT 16-1100
REVIEWED BY: C. HARTNETT
DELIVERY NO. FA2521-13-0005 18F0039
SUBMITTED BY: G. BEARD
AS BUILT DATE: ####

USAF 45TH CIVIL ENGINEER SQUADRON PAFB, FL
CONTRACT NO.: FA2521-13-D-0005 - 18F0039

RAEIS ARCHITECT-ENGINEER, INSPECTION SERVICES
OTIE JV1 Omaha Twitchell Company
GP STRATEGIES
AMRC
ALLEN Engineering,Inc.

SXHT 16-1100
REPAIR / REPLACE LIFT STATION 725
LIFT STATION SEQUENCE OF OPERATIONS

SHEET IDENTIFICATION
E-504

X:\SXHT\16-1100 Repair-Replace Lift Station 725\DWG\16-1100_E-504.dwg, 2/14/2018 11:40:41 AM

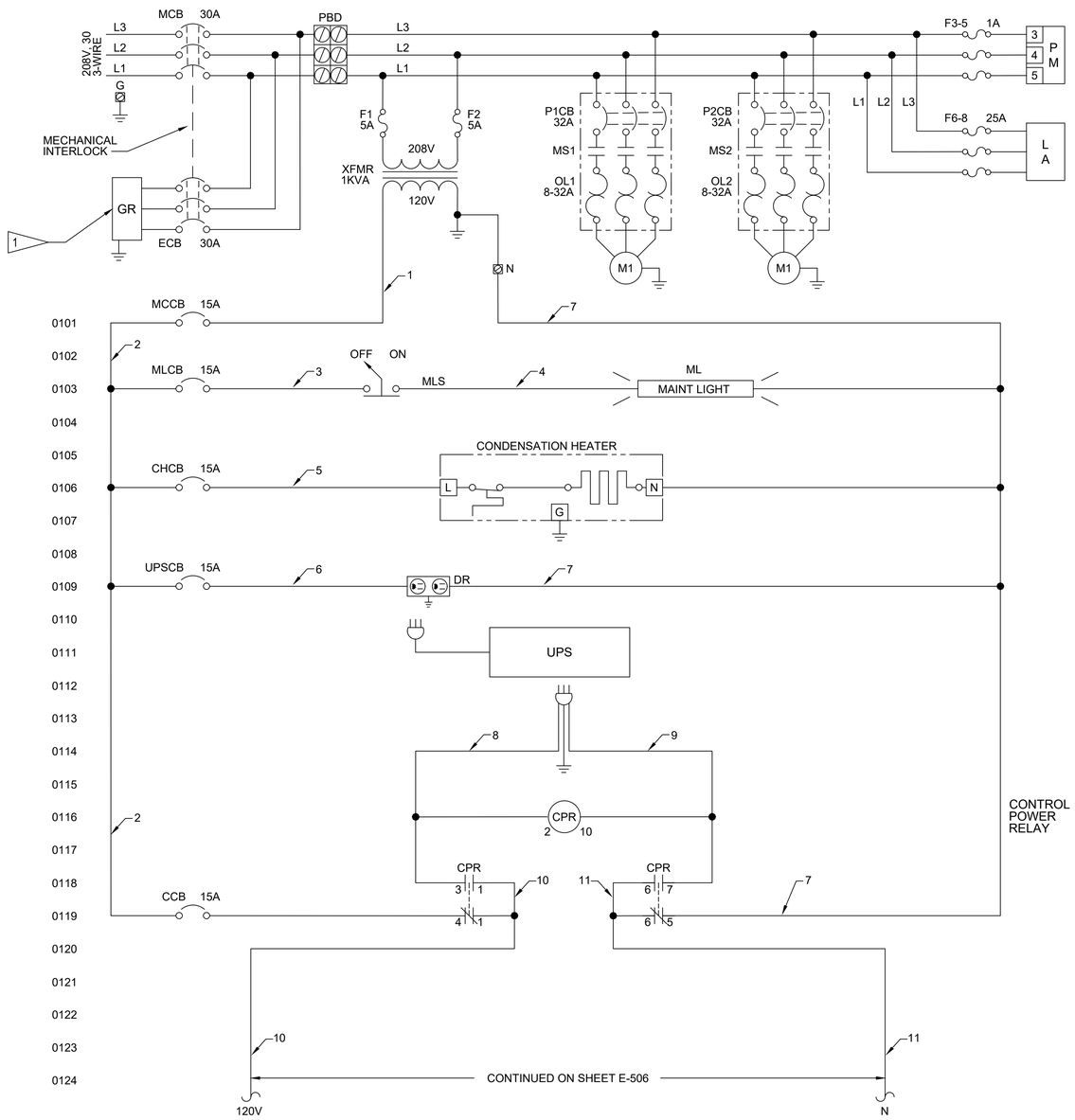

LIFT STATION CONTROL PANEL POWER

SCALE: NONE

GENERAL NOTE:

1. THIS DRAWING IS REPRESENTATIVE OF EXISTING LIFT STATION CONTROL PANELS INSTALLED ON PAFB. FEATURES AND FUNCTIONS OF THIS CONTROL DIAGRAM SHALL BE INCORPORATED INTO THE SUPPLIERS CONTROL SYSTEM.

FLAG NOTE:

1. 'GR' DENOTES GENERATOR RECEPTACLE.

DEPARTMENT OF THE AIR FORCE

DATE: 2/13/2018
SXHT 16-1100
DELIVERY NO. FA2521-13-D-0005 18F0039
AS BUILT DATE: ####

DESIGNED BY: L. COLEMAN
DRAWN BY: G. BOGIATZIDIS
REVIEWED BY: C. HARTNETT
SUBMITTED BY: G. BEARD

USAF 45TH CIVIL ENGINEER SQUADRON PAFB, FL

CONTRACT NO.: FA2521-13-D-0005 - 18F0039

RAEIS OTIE GP STRATEGIES AMRC ALLEN Engineering,Inc.

SXHT 16-1100

REPAIR / REPLACE LIFT STATION 725

LIFT STATION CONTROL PANEL POWER

SHEET IDENTIFICATION

E-505

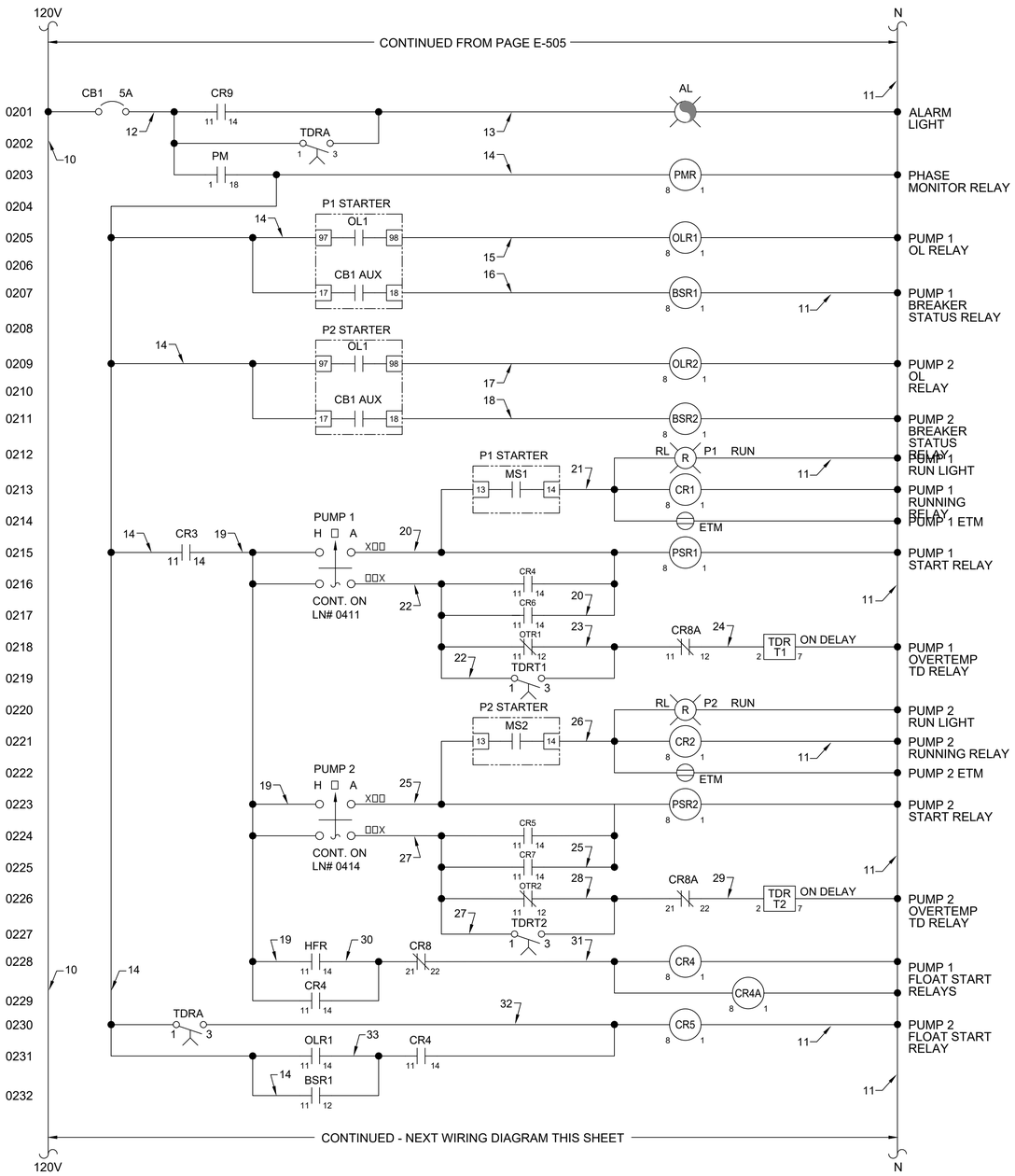

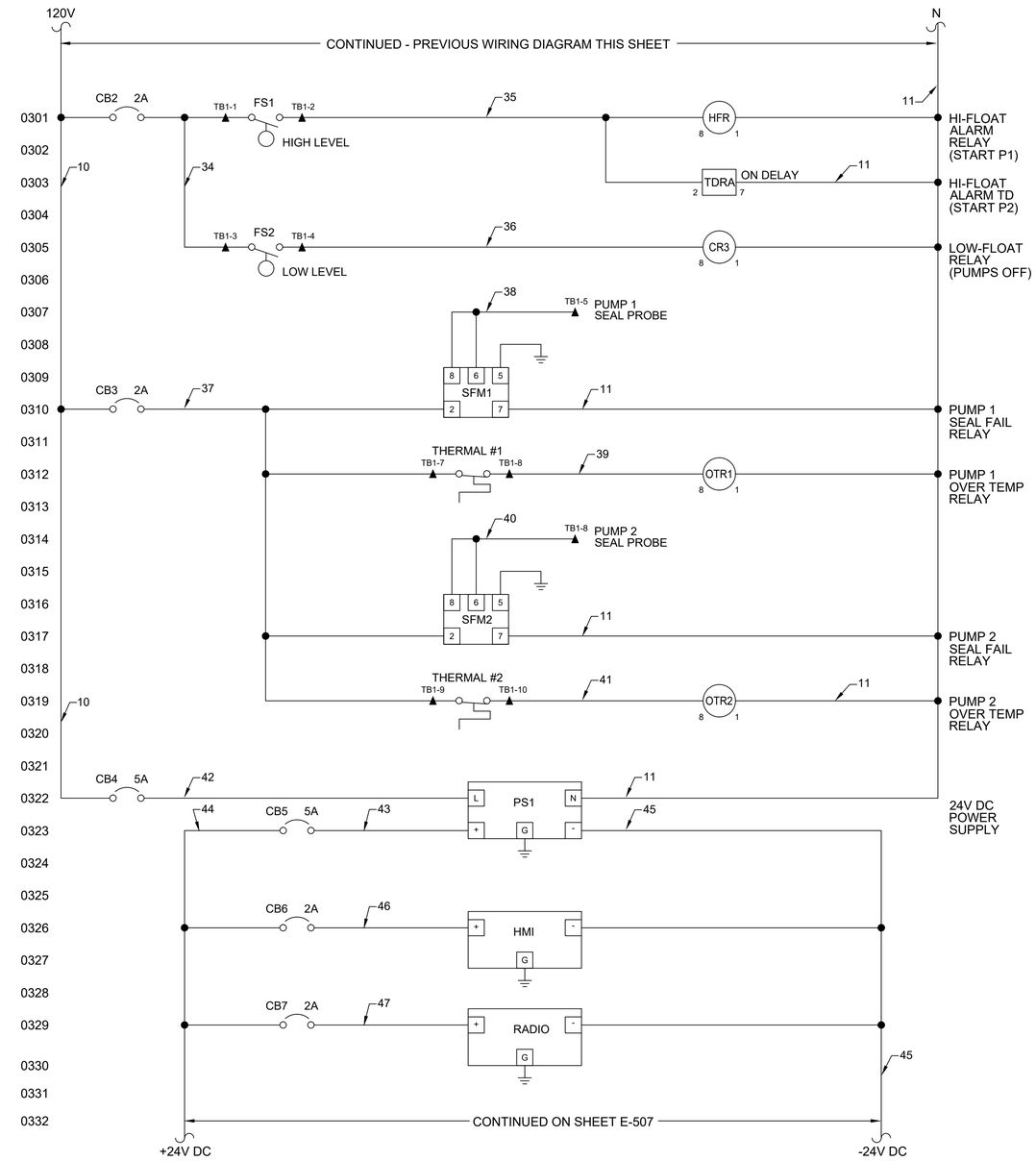

GENERAL NOTES:

1. THIS DRAWING IS REPRESENTATIVE OF EXISTING LIFT STATION CONTROL PANELS INSTALLED ON PAFB. FEATURES AND FUNCTIONS OF THIS CONTROL DIAGRAM SHALL BE INCORPORATED INTO THE SUPPLIERS CONTROL SYSTEM.
2. INSTALL A CONTACT RELAY AND A TIME DELAY RELAY IN THE HIGH FLOAT CIRCUIT, SO THAT IF THE LOW FLOAT FAILS THE PUMPS WILL START, AND RUN FOR A PERIOD OF TIME, CONTINUING TO CYCLE ON AND OFF TO PREVENT THE LIFT STATION FROM OVERFLOWING UNTIL REPAIRS TO THE CONTROLS OR FLOAT ARE COMPLETED.

LIFT STATION CONTROL PANEL 120V WIRING

SCALE: NONE

DEPARTMENT OF THE AIR FORCE

DATE: 2/13/2018
SXHT 16-1100
DELIVERY NO. FA2521-13-D-0005 18F0039
AS BUILT DATE: ####
DESIGNED BY: L. COLEMAN
DRAWN BY: G. BOGIATZIDIS
REVIEWED BY: C. HARTNETT
SUBMITTED BY: G. BEARD

USAF 45TH CIVIL ENGINEER SQUADRON PAFB, FL

CONTRACT NO.: FA2521-13-D-0005 - 18F0039

RAEIS OTIE GP STRATEGIES AMRC ALLEN Engineering,Inc.

SXHT 16-1100

REPAIR / REPLACE LIFT STATION 725

LIFT STATION CONTROL PANEL 120V WIRING

SHEET IDENTIFICATION

E-506

X:\SXHT\16-1100 Repair-Replace Lift Station 725\DWG\16-1100_E-506.dwg, 2/14/2018 11:40:48 AM

GENERAL NOTES:

1. THIS DRAWING IS REPRESENTATIVE OF EXISTING LIFT STATION CONTROL PANELS INSTALLED ON PAFB. FEATURES AND FUNCTIONS OF THIS CONTROL DIAGRAM SHALL BE INCORPORATED INTO THE SUPPLIERS CONTROL SYSTEM.
2. PROVIDE AN ALARM VIA THE SCADA SYSTEM WHEN THE SYSTEM SWITCHES TO 'FLOAT MODE'.

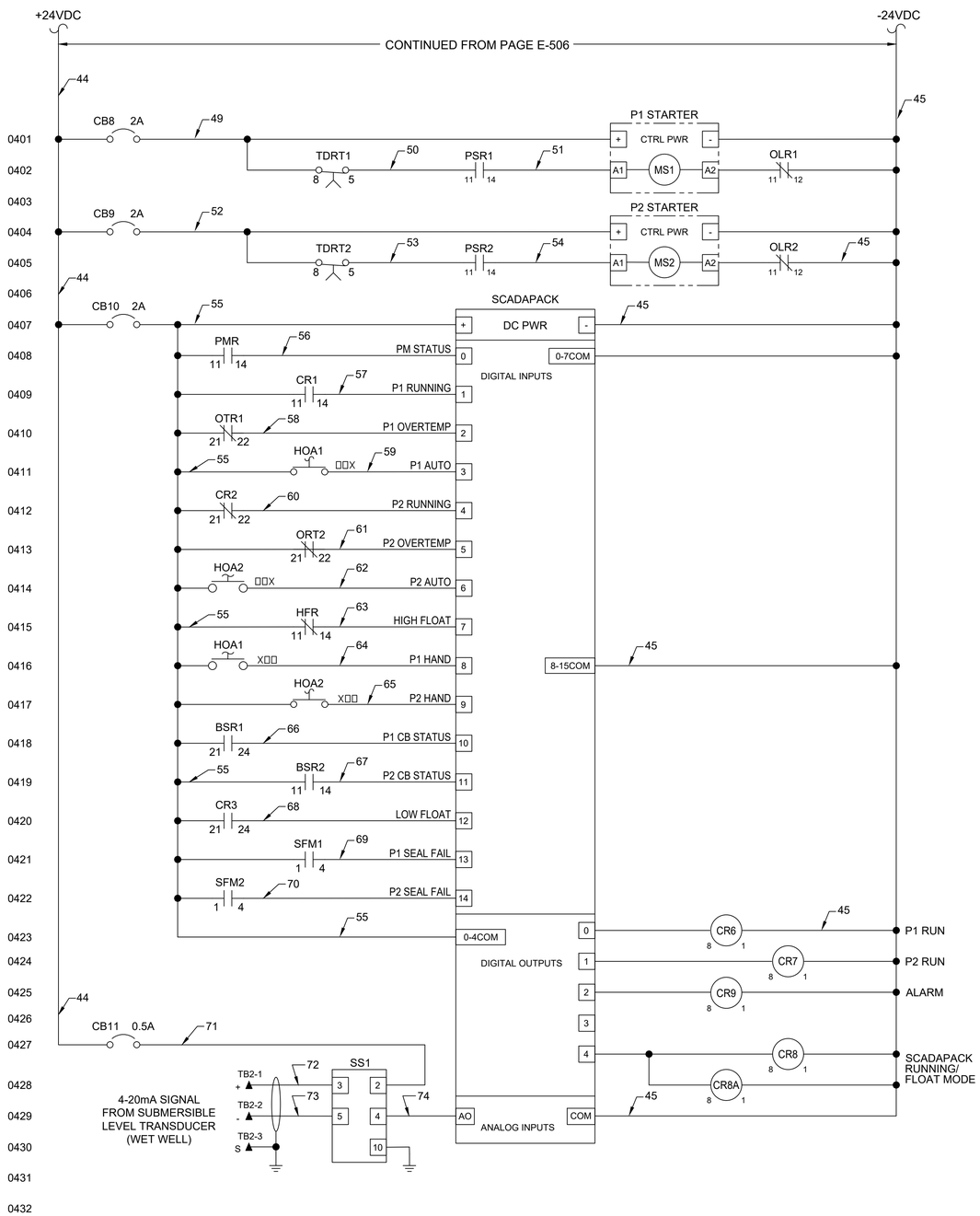

LIFT STATION CONTROL PANEL SCADAPACK WIRING

SCALE: NONE

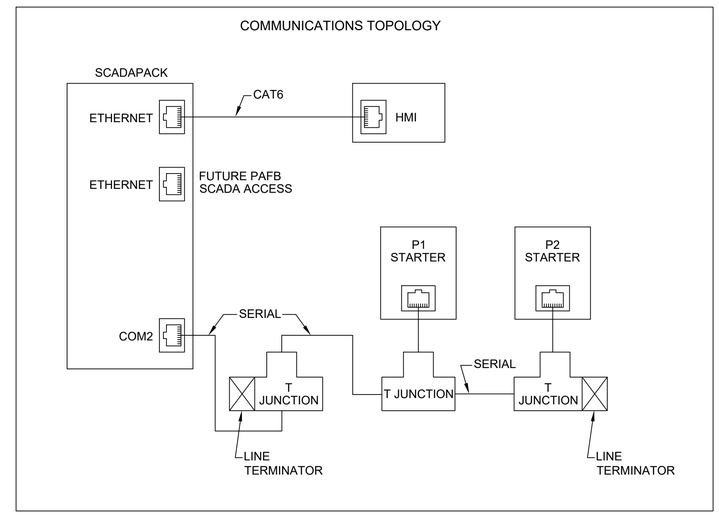

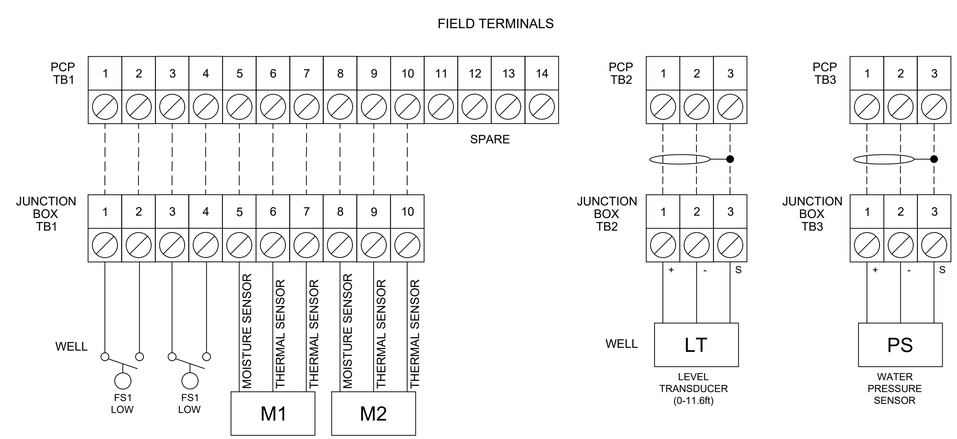

LIFT STATION CONTROL PANEL COMMUNICATIONS & FIELD WIRING

SCALE: NONE

DEPARTMENT OF THE AIR FORCE

DATE: 2/13/2018	SXHT 16-1100
DESIGNED BY: L. COLEMAN	DRAWN BY: G. BOGIATZIDIS
REVIEWED BY: C. HARTNETT	DELIVERY NO. FA2521-13-D-0005 18F0039
SUBMITTED BY: G. BEARD	AS BUILT DATE: ####

USAF 45TH CIVIL ENGINEER SQUADRON PAFB, FL

CONTRACT NO.: FA2521-13-D-0005 - 18F0039

RAEIS OTIE GP STRATEGIES AMRC ALLEN Engineering, Inc.

SXHT 16-1100

REPAIR / REPLACE LIFT STATION 725

LIFT STATION CONTROL PANEL SCADAPACK & FIELD WIRING

SHEET IDENTIFICATION

E-507

X:\SXHT\16-1100 Repair-Replace Lift Station 725\DWG\16-1100_E-507.dwg, 2/14/2018 11:40:51 AM