AQUATIC INVASIVE SPECIES PREVENTION - BOAT WASHING FACILITIES DESIGN

~~BLACK RIVER HARBOR AND~~ HAGERMAN LAKE RECREATIONAL FACILITIES

OTTAWA NATIONAL FOREST

US DEPARTMENT OF AGRICULTURE FOREST SERVICE

CHEQUAMEGON BAY ENGINEERING, INC.
CBE 2002-2011

ASHLAND, WI
211 6TH STREET WEST
ASHLAND, WI. 54806
PHONE: (715) 682-6004
FAX: (715) 682-6025

MINOQUA, WI
7609 HWY. 51 SOUTH.,
MINOQUA, WI. 54548
PHONE: (715) 356-9300
FAX: (715) 358-6719

MILWAUKEE, WI
1109 N. MAYFAIR RD.,
SUITE 208
MILWAUKEE, WI. 53226
PHONE: (414) 258-6004
FAX: (414) 258-6154

LOCATION MAP

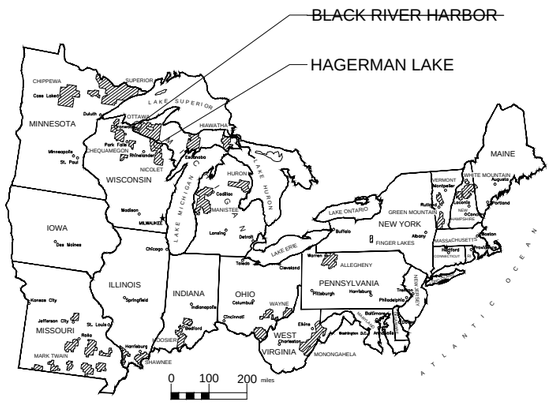

PROJECT TEAM

CHEQUAMEGON BAY ENGINEERING, INC.

ASHLAND, WI
211 6TH STREET WEST
ASHLAND, WI 54806

PHONE: (715) 682-6004
FAX: (715) 682-6025

MINOCQUA, WI
7609 HWY 51 SOUTH
MINOCQUA, WI 54548

PHONE: (715) 356-9300
FAX: (715) 358-6719

SHEET INDEX

	SHEET NO.	SHEET TITLE	35% DESIGN REVIEW	95% DESIGN REVIEW	BID DOCUMENTS	REVISION 1	REVISION 2
1	G100	TITLE SHEET	3/10/2011	4/12/2011	4/29/2011	7/15/2011	
~~X~~	~~C101~~	~~BLACK RIVER HARBOR SITE PLAN~~	~~3/10/2011~~	~~4/12/2011~~	~~4/29/2011~~	NOT IN CONTRACT	
~~X~~	~~C102~~	~~BLACK RIVER HARBOR PROFILES~~	~~3/10/2011~~	~~4/12/2011~~	~~4/29/2011~~	NOT IN CONTRACT	
~~X~~	~~C103~~	BLACK RIVER HARBOR LAYOUT PLAN		~~4/12/2011~~	~~4/29/2011~~	NOT IN CONTRACT	
~~X~~	~~C104~~	BLACK RIVER HARBOR GRADING PLAN		~~4/12/2011~~	~~4/29/2011~~	NOT IN CONTRACT	
~~X~~	~~C105~~	~~BLACK RIVER HARBOR DETAILS~~	~~3/10/2011~~	~~4/12/2011~~	~~4/29/2011~~	NOT IN CONTRACT	
2	C201	HAGERMAN LAKE SITE PLAN	3/10/2011	4/12/2011	4/29/2011	7/15/2011	
3	C202	HAGERMAN LAKE LAYOUT & GRADING PLAN		4/12/2011	4/29/2011	7/15/2011	
4	C301	MISCELLANEOUS CONSTRUCTION DETAILS	3/10/2011	4/12/2011	4/29/2011	7/15/2011	
5	C302	SIT FENCE AND EROSION BALE INSTALLATION DETAILS			4/29/2011	7/15/2011	
6	A101	EQUIPMENT AND STORAGE BUILDING PLAN	3/10/2011	4/12/2011	4/29/2011	7/15/2011	
7	A102	BUILDING DETAILS & ELECTRICAL DIAGRAMS			4/29/2011	7/15/2011	

PROJECT SITE LOCATION MAP

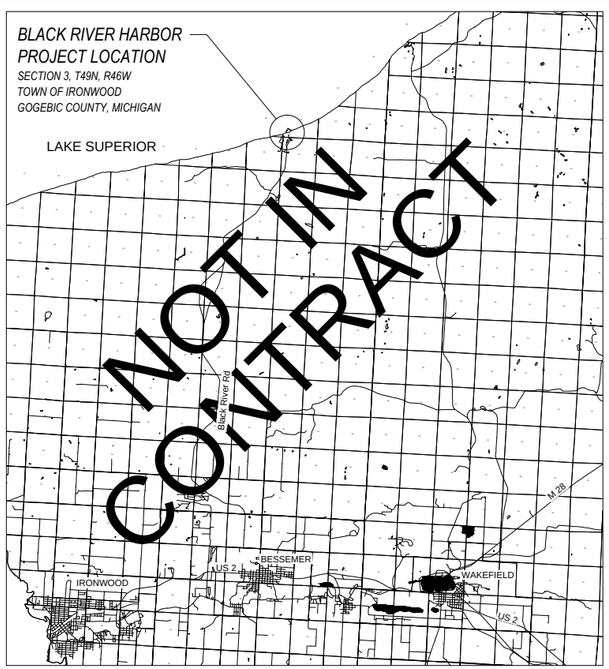

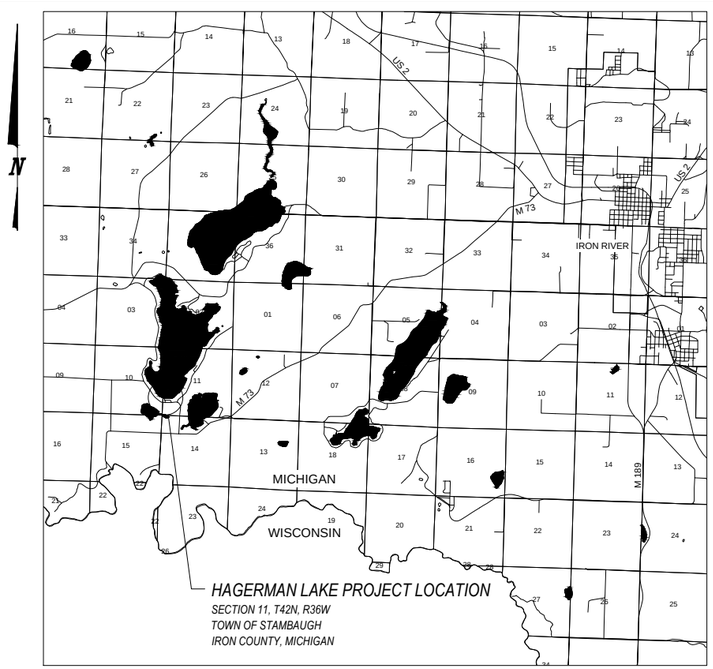

PROJECT APPROVALS

Herman E. Nass — 7/8/2011
IRON RIVER DISTRICT RANGER — DATE

NA
BESSEMER DISTRICT RANGER — DATE

Michael J. Bigelow, P.E. — 7/8/2011
FOREST ENGINEER — DATE

[illegible] — 7/11/11
FOREST SUPERVISOR — DATE

DRAWING NOTES

CONTRACTOR IS RESPONSIBLE FOR PUBLIC AND PRIVATE UTILITY LOCATES PRIOR TO PERFORMING THE WORK OF THIS CONTRACT.

No.	Revision/Issue	Date
4		
3		
2		
1		

U.S. DEPARTMENT OF AGRICULTURE
FOREST SERVICE
REGION NINE

Project Name
Aquatic Invasive Species Prevention
Boat Washing Facilities Design
~~Black River Harbor and~~ Hagerman Lake Recreational Sites
Ottawa National Forest
~~Bessemer and~~ Iron River Ranger Districts

FINAL SUBMITTAL DOCUMENTS

Drawing Title
TITLE SHEET

Drawn J. SOLBERG	*CBE Project No.* 10-110
Checked J. SAJDAK	*Drawing Sheet No.* G100
CAD Archive No.	
Date 4-29-2011	
Plotter Scale as shown	*Sheet* 1 *of* 12

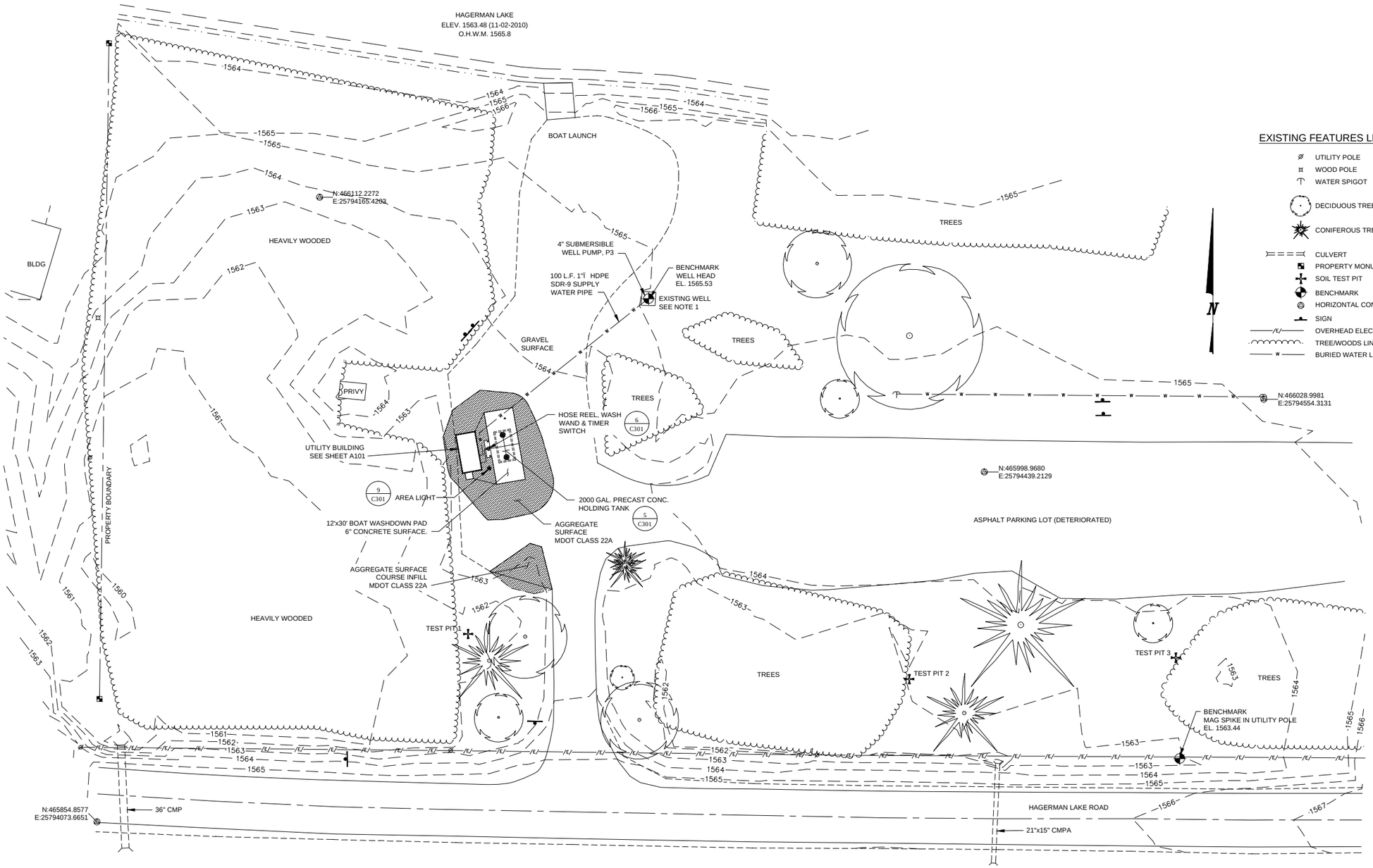

EXISTING FEATURES LEGEND

- UTILITY POLE
- WOOD POLE
- WATER SPIGOT
- DECIDUOUS TREE
- CONIFEROUS TREE
- CULVERT
- PROPERTY MONUMENT
- SOIL TEST PIT
- BENCHMARK
- HORIZONTAL CONTROL POINT
- SIGN
- OVERHEAD ELECTRIC
- TREE/WOODS LINE
- BURIED WATER LINE

PROPOSED FEATURES LEGEND

- SUPPLY WATER PIPE
- NEW CRUSHED AGGREGATE SURFACE

SCALE 20 0 20 40 60 FEET

EXISTING CONTOUR INTERVAL: 1 FOOT

CHEQUAMEGON BAY ENGINEERING, INC.
© CBE 2002-2011

ASHLAND, WI
211 6TH STREET WEST
ASHLAND, WI. 54806
PHONE: (715) 682-6004
FAX: (715) 682-6025

MILWAUKEE, WI
1109 N. MAYFAIR RD., SUITE 208
MILWAUKEE, WI. 53226
PHONE: (414) 258-6004
FAX: (414) 258-6154

MINOQUA, WI
7659 HWY. 51 SOUTH,
MINOQUA, WI. 54548
PHONE: (715) 356-9300
FAX: (715) 358-6719

DRAWING NOTES

1. EXISTING WELL SPECIFICATIONS:
   - 6" DIAMETER, STEEL CASED WELL WITH THREADED AND COUPLED JOINTS.
   - 34 FEET DEPTH.
   - STATIC WATER LEVEL 7 FEET.
   - PUMPING LEVEL, 10.5' (AFTER PUMPING 15 GPM FOR 2.5 HOURS).

No.	Revision/Issue	Date
4		
3		
2		
1		

U.S. DEPARTMENT OF AGRICULTURE
FOREST SERVICE
EASTERN REGION
REGION NINE

Project Name
Aquatic Invasive Species Prevention
Boat Washing Facilities Design
~~Black River Harbor and~~ Hagerman Lake Recreational Sites
Ottawa National Forest
~~Bessemer and~~ Iron River Ranger Districts

FINAL SUBMITTAL DOCUMENTS

Drawing Title
Hagerman Lake Site Plan

Drawn: J. SOLBERG	CBE Project No.: 10-110
Checked: J. SAJDAK	Drawing Sheet No.: C201
CAD Archive No.	
Date: 4-29-2011	
Plotter Scale: as shown	Sheet 2 of 7

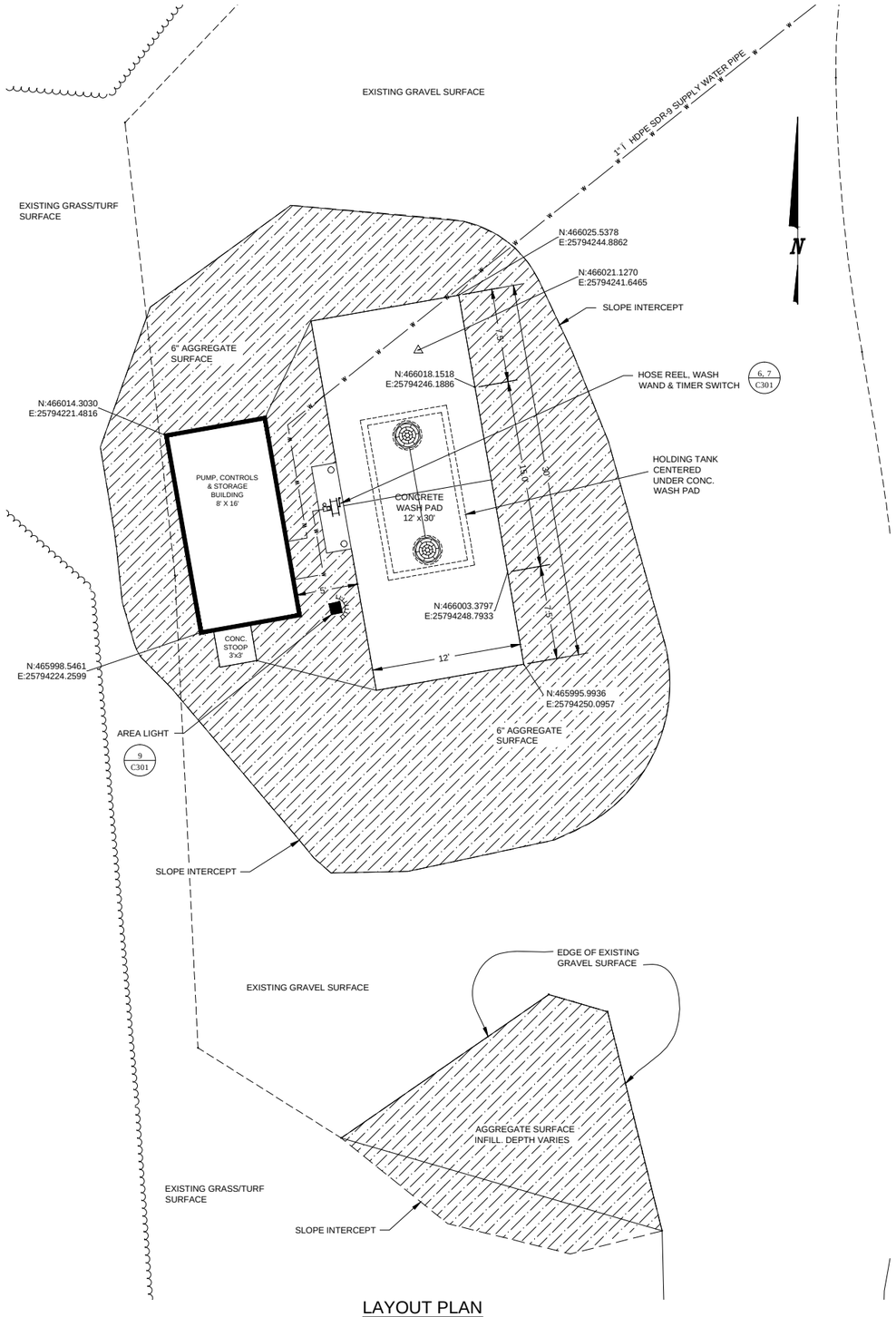

LAYOUT PLAN

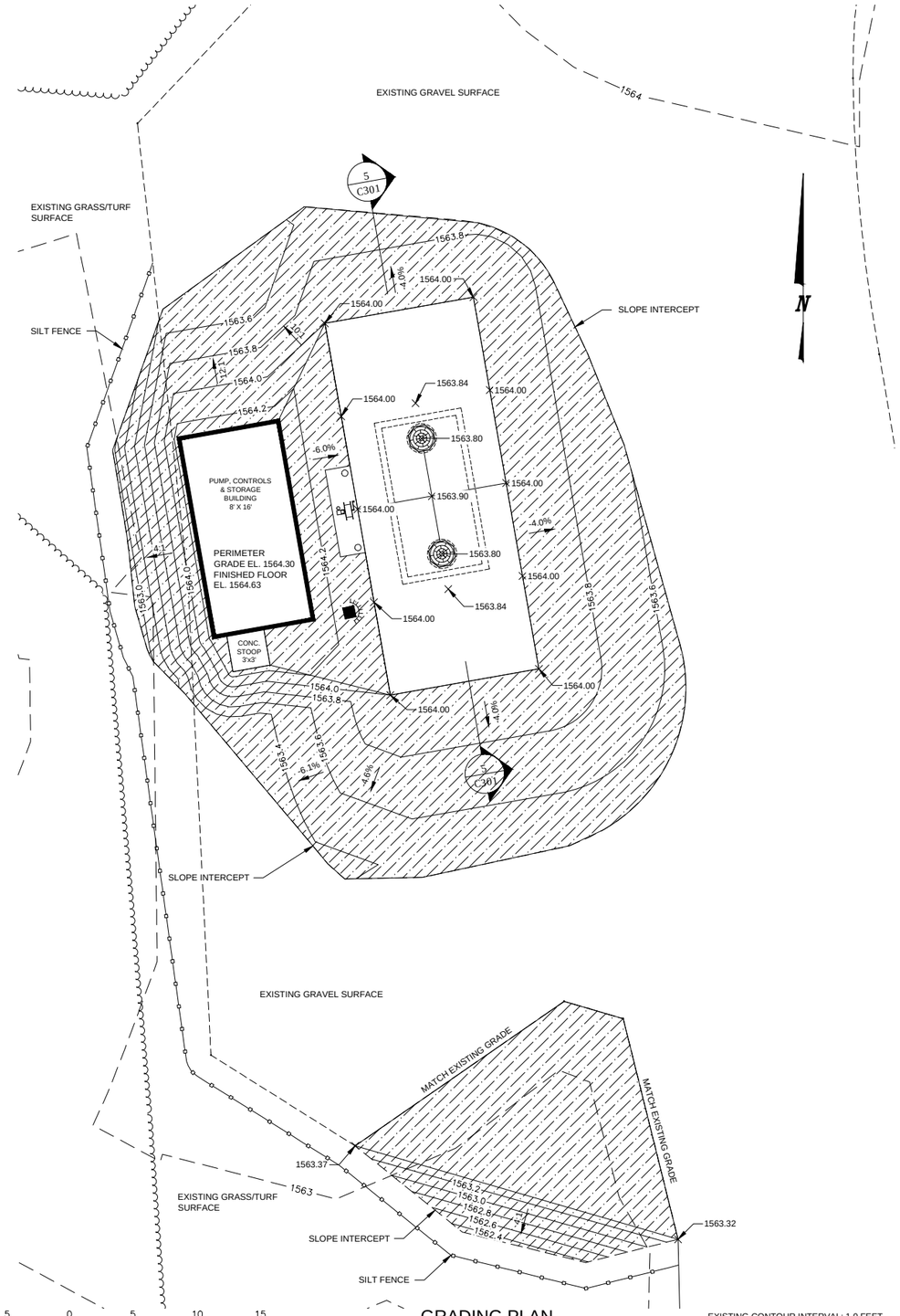

GRADING PLAN

EXISTING CONTOUR INTERVAL: 1.0 FEET
PROPOSED CONTOUR INTERVAL: 0.2 FEET

CHEQUAMEGON BAY ENGINEERING, INC.
© CBE 2002-2011

ASHLAND, WI
211 6TH STREET WEST
ASHLAND, WI. 54806
PHONE: (715) 682-6004
FAX: (715) 682-6025

MINOQUA, WI
7659 HWY. 51 SOUTH,
MINOQUA, WI. 54548
PHONE: (715) 356-9300
FAX: (715) 358-6719

MILWAUKEE, WI
1109 N. MAYFAIR RD.,
SUITE 208
MILWAUKEE, WI. 53226
PHONE: (414) 258-6004
FAX: (414) 258-6154

DRAWING NOTES

No.	Revision/Issue	Date
4		
3		
2		
1		

U.S. DEPARTMENT OF AGRICULTURE
FOREST SERVICE
EASTERN REGION
REGION NINE

Project Name
Aquatic Invasive Species Prevention
Boat Washing Facilities Design
~~Black River Harbor and~~ Hagerman Lake Recreational Sites
Ottawa National Forest
~~Bessemer and~~ Iron River Ranger Districts

FINAL SUBMITTAL DOCUMENTS

Drawing Title
Hagerman Lake Layout & Grading Plan

Drawn: J. SOLBERG	CBE Project No.: 10-110
Checked: J. SAJDAK	Drawing Sheet No.: C202
CAD Archive No.	
Date: 4-29-2011	
Plotter Scale: as shown	Sheet 3 of 7

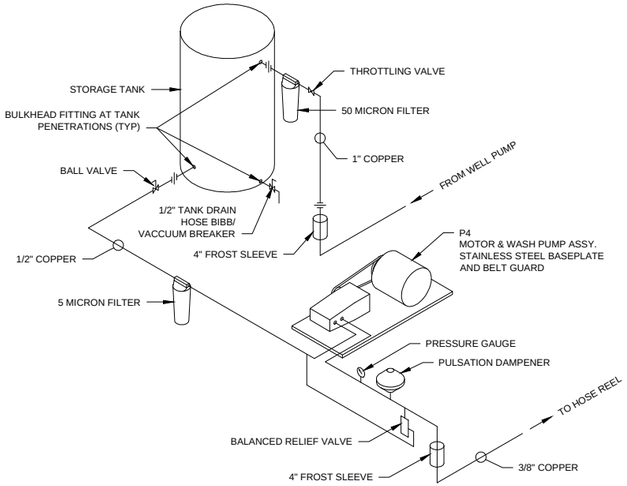

1 UTILITY BUILDING PLUMBING ISOMETRIC
NO SCALE

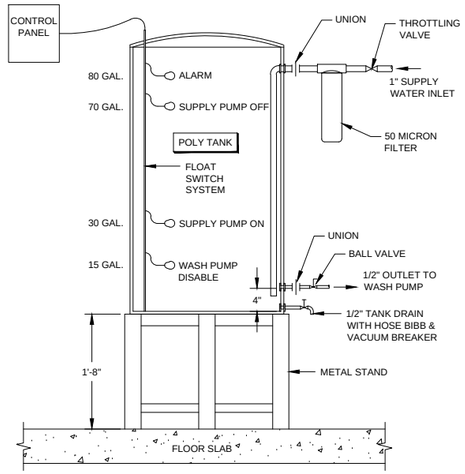

2 TYPICAL WATER STORAGE TANK
SCALE: 1"=1'-0"

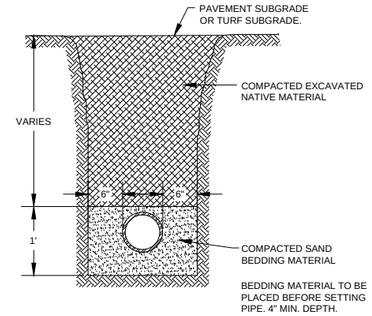

3 TRENCH BACKFILL AND PIPE BEDDING DETAIL
NO SCALE

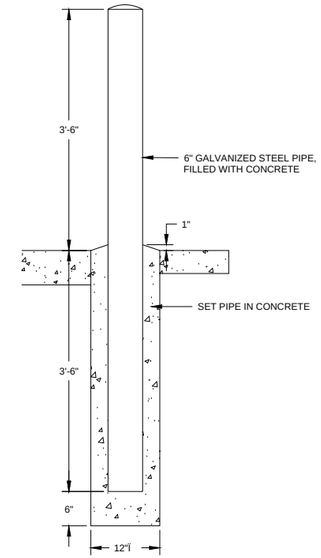

4 BOLLARD DETAIL
SCALE: 1"=1'-0"

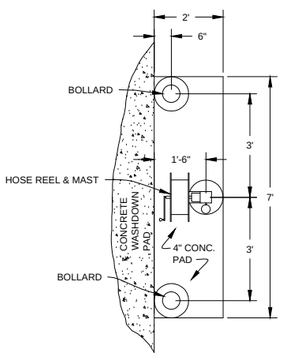

6 HOSE REEL, MAST & BOLLARD PLAN
SCALE: 1/2"=1'-0"

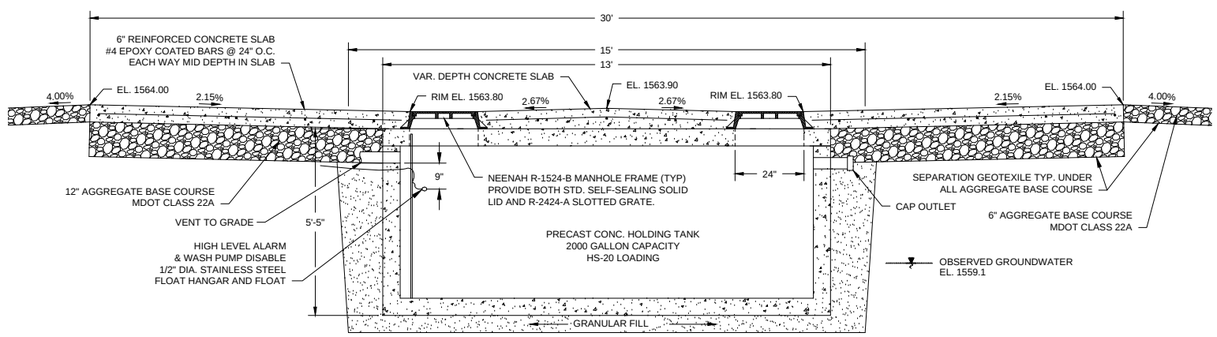

5 WASHDOWN PAD SECTION
HAGERMAN LAKE SITE
SCALE: 1/2" = 1'-0"

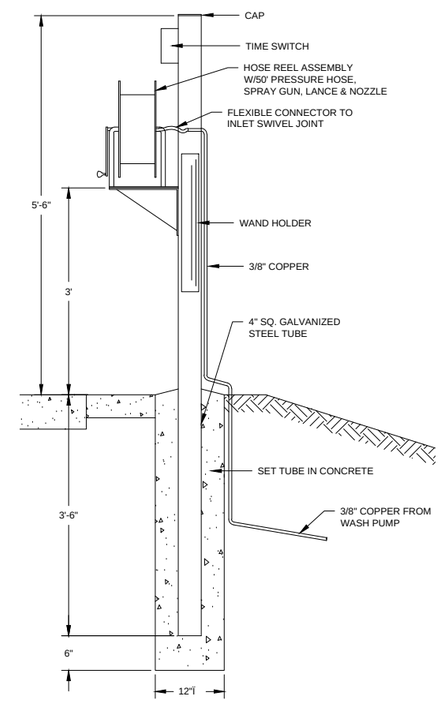

7 HOSE REEL MAST DETAIL
SCALE: 1"=1'-0"

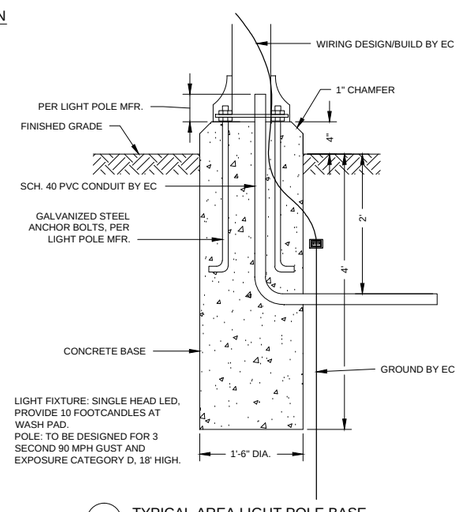

9 TYPICAL AREA LIGHT POLE BASE
NO SCALE

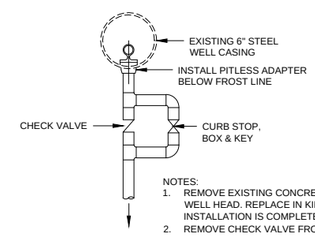

NOTES:
1. REMOVE EXISTING CONCRETE PAD AT WELL HEAD. REPLACE IN KIND WHEN INSTALLATION IS COMPLETE.
2. REMOVE CHECK VALVE FROM PUMP PRIOR TO INSTALLATION.

8 WELL PUMP INSTALLATION DETAIL
HAGERMAN LAKE SITE
NO SCALE

CHEQUAMEGON BAY ENGINEERING, INC.
© CBE 2003-2011

MINOQUA, WI
7659 HWY. 51 SOUTH,
MINOQUA, WI. 54548
PHONE: (715) 356-9300
FAX: (715) 358-6719

ASHLAND, WI
211 6TH STREET WEST
ASHLAND, WI. 54806
PHONE: (715) 682-6004
FAX: (715) 682-6025

MILWAUKEE, WI
1109 N. MAYFAIR RD.,
SUITE 208
MILWAUKEE, WI. 53226
PHONE: (414) 258-6004
FAX: (414) 258-6154

DRAWING NOTES

No.	Revision/Issue	Date
4		
3		
2		
1		

U.S. DEPARTMENT OF AGRICULTURE
FOREST SERVICE
EASTERN REGION
REGION NINE

Project Name
Aquatic Invasive Species Prevention
Boat Washing Facilities Design
~~Black River Harbor and~~ Hagerman Lake Recreational Sites
Ottawa National Forest
~~Bessemer and~~ Iron River Ranger Districts

FINAL SUBMITTAL DOCUMENTS

Drawing Title
Miscellaneous Construction Details

Drawn: J. SOLBERG	CBE Project No.: 10-110
Checked: J. SAJDAK	Drawing Sheet No.: C301
CAD Archive No.	
Date: 4-29-2011	
Plotter Scale: as shown	Sheet 4 of 7

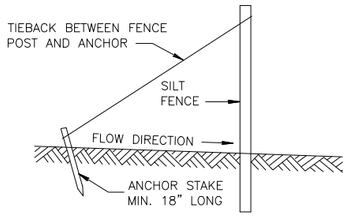

SILT FENCE TIE BACK

(WHEN ADDITIONAL SUPPORT REQUIRED)

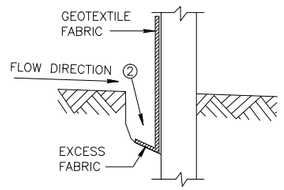

TRENCH DETAIL

GENERAL NOTES

1. HORIZONTAL BRACE REQUIRED WITH 2" X 4" WOODEN FRAME OR EQUIVALENT AT TOP OF POSTS.

2. TRENCH SHALL BE A MINIMUM OF 4" WIDE & 6" DEEP TO BURY AND ANCHOR THE GEOTEXTILE FABRIC. FOLD MATERIAL TO FIT TRENCH AND BACKFILL & COMPACT TRENCH WITH EXCAVATED SOIL.

3. WOOD POSTS SHALL BE A MINIMUM SIZE OF 1½" X 1½" OF OAK OR HICKORY.

4. CONSTRUCT SILT FENCE FROM A CONTINUOUS ROLL IF POSSIBLE BY CUTTING LENGTHS TO AVOID JOINTS. IF A JOINT IS NECESSARY USE ONE OF THE FOLLOWING TWO METHODS; A) OVERLAP THE END POSTS AND TWIST, OR ROTATE, AT LEAST 180 DEGREES, B) HOOK THE END OF EACH SILT FENCE LENGTH.

NOTE: ADDITIONAL POST DEPTH OR TIE BACKS MAY BE REQUIRED IN UNSTABLE SOILS

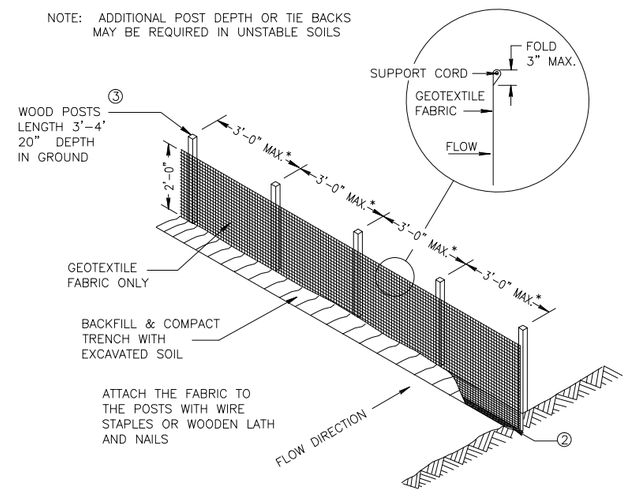

* NOTE: 8'-0" POST SPACING ALLOWED IF A WOVEN GEOTEXTILE FABRIC IS USED.

SILT FENCE

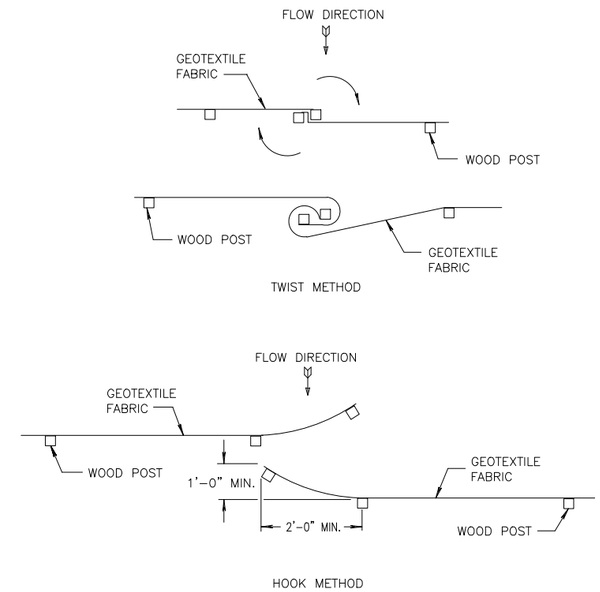

JOINING TWO LENGTHS OF SILT FENCE 5

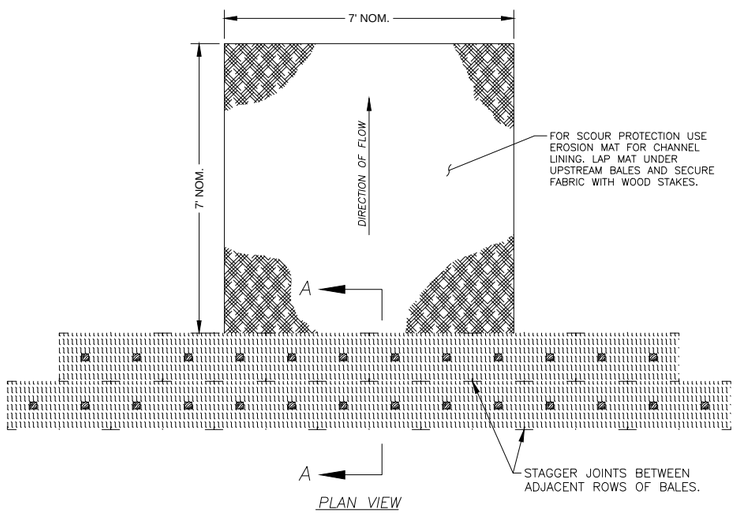

PLAN VIEW

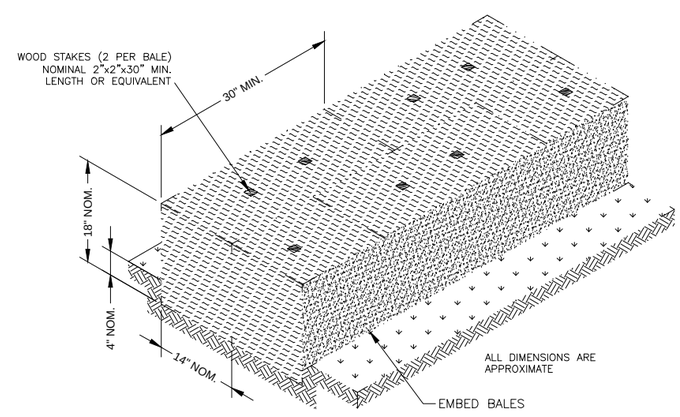

SECTION A–A

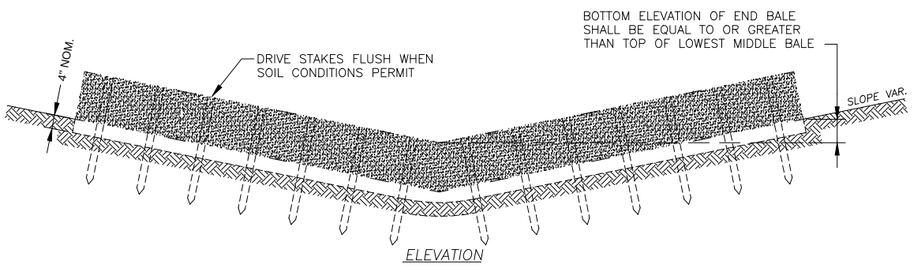

ELEVATION

TEMPORARY DITCH CHECKS USING EROSION BALES

CHEQUAMEGON BAY ENGINEERING, INC.
© CBE 2003-2011

ASHLAND, WI
211 6TH STREET WEST
ASHLAND, WI. 54806
PHONE: (715) 682-6004
FAX: (715) 682-6025

MINOQUA, WI
7659 HWY. 51 SOUTH,
MINOQUA, WI. 54548
PHONE: (715) 356-9300
FAX: (715) 358-6719

MILWAUKEE, WI
1109 N. MAYFAIR RD.,
SUITE 208
MILWAUKEE, WI. 53226
PHONE: (414) 258-6004
FAX: (414) 258-6154

DRAWING NOTES

No.	Revision/Issue	Date
4		
3		
2		
1		

U.S. DEPARTMENT OF AGRICULTURE
FOREST SERVICE
EASTERN REGION
REGION NINE

Project Name
Aquatic Invasive Species Prevention
Boat Washing Facilities Design
~~Black River Harbor and~~ Hagerman Lake Recreational Sites
Ottawa National Forest
~~Bessemer and~~ Iron River Ranger Districts

FINAL SUBMITTAL DOCUMENTS

Drawing Title
Silt Fence & Erosion Bale Installation Details

Drawn: J. SOLBERG	CBE Project No.: 10-110
Checked: J. SAJDAK	Drawing Sheet No.: C302
CAD Archive No.	
Date: 4-29-2011	
Plotter Scale: as shown	Sheet 10 of 12

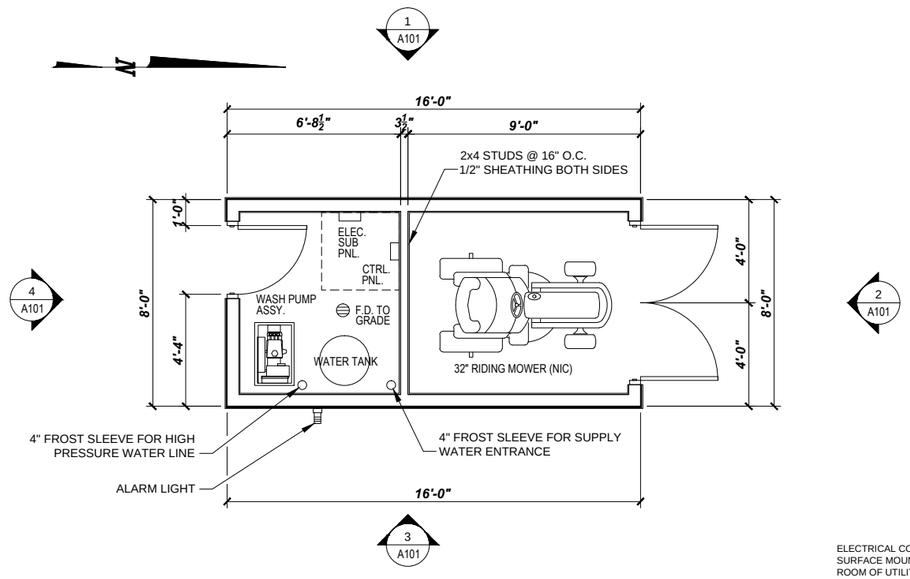

HAGERMAN LAKE UTILITY BUILDING PLAN

SCALE: 3/8" = 1'-0"

ELECTRICAL CONTRACTOR TO PROVIDE AND INSTALL SURFACE MOUNT LIGHT WITH SINGLE POLE SWITCH IN EACH ROOM OF UTILITY BUILDINGS. ELECTRICAL CONTRACTOR TO PROVIDE AND INSTALL WATERPROOF GFCI OUTLETS IN EACH BUILDING, MINIMUM ONE ON EACH WALL.

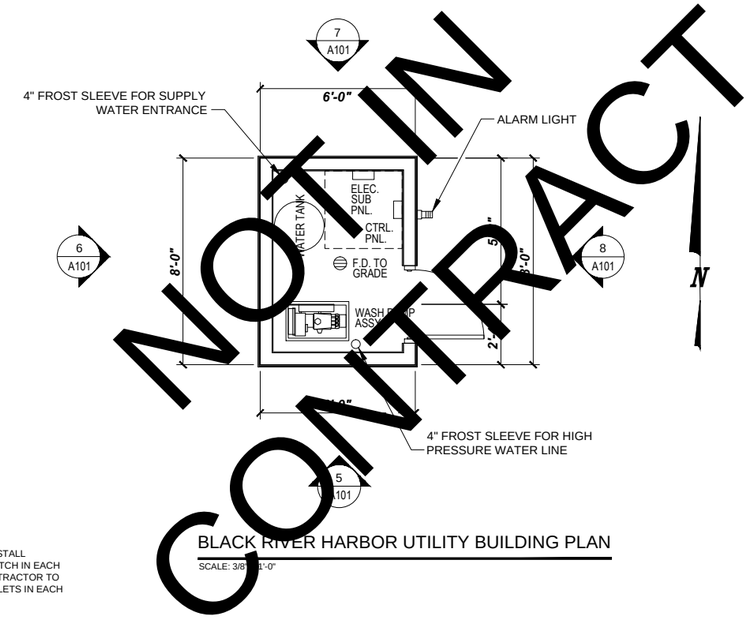

BLACK RIVER HARBOR UTILITY BUILDING PLAN

SCALE: 3/8" = 1'-0"

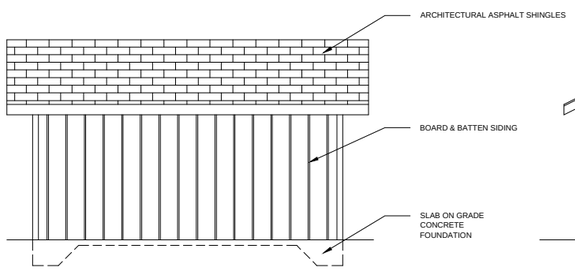

1 WEST ELEVATION

SCALE: 1/4" = 1'-0"

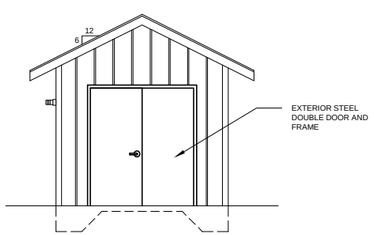

2 NORTH ELEVATION

SCALE: 1/4" = 1'-0"

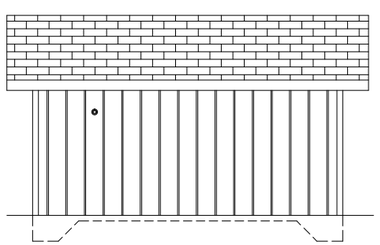

3 EAST ELEVATION

SCALE: 1/4" = 1'-0"

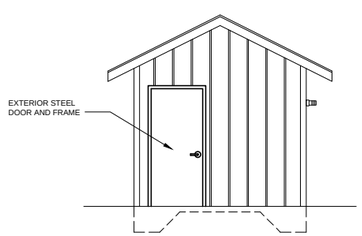

4 SOUTH ELEVATION

SCALE: 1/4" = 1'-0"

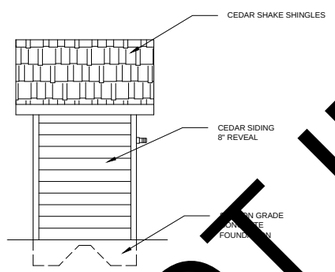

5 SOUTH ELEVATION

SCALE: 1/4" = 1'-0"

6 WEST ELEVATION

SCALE: 1/4" = 1'-0"

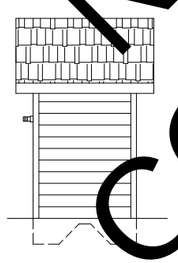

7 NORTH ELEVATION

SCALE: 1/4" = 1'-0"

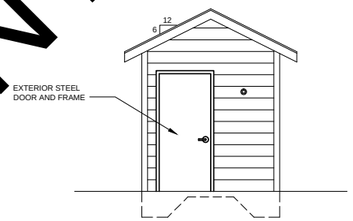

8 EAST ELEVATION

SCALE: 1/4" = 1'-0"

NOT IN CONTRACT

CHEQUAMEGON BAY ENGINEERING, INC.
© CBE 2002-2011

ASHLAND, WI
211 6TH STREET WEST
ASHLAND, WI. 54806
PHONE: (715) 682-6004
FAX: (715) 682-6025

MINOQUA, WI
7659 HWY. 51 SOUTH,
MINOQUA, WI. 54548
PHONE: (715) 356-9300
FAX: (715) 358-6719

MILWAUKEE, WI
1109 N. MAYFAIR RD.,
SUITE 208
MILWAUKEE, WI. 53226
PHONE: (414) 258-6004
FAX: (414) 258-6154

DRAWING NOTES

No.	Revision/Issue	Date
4		
3		
2		
1		

U.S. DEPARTMENT OF AGRICULTURE
FOREST SERVICE
WESTERN REGION
REGION NINE

Project Name
Aquatic Invasive Species Prevention
Boat Washing Facilities Design
~~Black River Harbor and~~ Hagerman Lake Recreational Sites
Ottawa National Forest
~~Bessemer and~~ Iron River Ranger Districts

FINAL SUBMITTAL DOCUMENTS

Drawing Title
Equipment and Storage Building Plan

Drawn J. SOLBERG	*CBE Project No.* 10-110
Checked J. SAJDAK	*Drawing Sheet No.* A101
CAD Archive No.	
Date 4-29-2011	*Sheet* 6 *of* 7
Plotter Scale as shown	

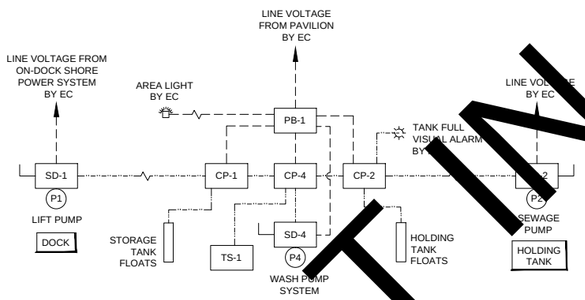

LOW VOLTAGE & ELECTRICAL SCHEMATIC RISER DIAGRAM
BLACK RIVER HARBOR SITE
NO SCALE

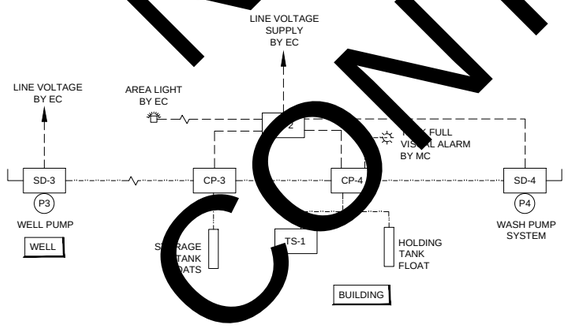

LOW VOLTAGE & ELECTRICAL SCHEMATIC RISER DIAGRAM
HAGERMAN LAKE SITE
NO SCALE

NOTES:

1. LOW VOLTAGE WORK IS DESIGN/BUILD BY ELECTRICAL CONTRACTOR (EC) FOR ALL PROJECT WORK. RISER IS SHOWN FOR CONVENIENCE.
   LOW VOLTAGE CONTROL WORK SHALL BE BY MECHANICAL CONTRACTOR (MC).
2. ALL ELECTRICAL WORK SHALL BE IN ACCORDANCE WITH THE N.E.C. AND USDA FOREST SERVICE GUIDELINES.
4. 230V 1-PHASE BREAKERS AVAILABLE IN EXISTING PAVILION PANEL AT BLACK RIVER HARBOR SITE. 230V 1-PHASE POWER AVAILABLE ON DOCK.
5. AERIAL POWER LOCATED ALONG ROAD AT HAGERMAN LAKE SITE. ELECTRICAL CONTRACTOR TO DESIGN/BUILD CONNECTION IN COORDINATION WITH ELECTRIC UTILITY.

LEGEND

SD-#	STARTER/DISCONNECT FOR EACH PUMP BY MC
P1	SEE PUMP SPECIFICATION - LIFT PUMP AT DOCK BY MC
P2	SEE PUMP SPECIFICATION - SEWAGE PUMP IN HOLDING TANK BY MC
P3	SEE PUMP SPECIFICATION - SUBMERSIBLE WELL PUMP BY MC
P4	SEE PUMP SPECIFICATION - PRESSURE WASH PUMP IN BUILDING BY MC
CP-#	CONTROL PANEL FOR PUMP BY MC
PB-1	ELECTRICAL PANELBOARD IN BUILDING BY EC
PB-2	ELECTRICAL PANELBOARD IN BUILDING BY EC
TS-1	TIME SWITCH ON HOSE REEL MAST BY MC
- - - - - -	LOW VOLTAGE WIRING BY MC
— — — —	LINE VOLTAGE WIRING BY EC

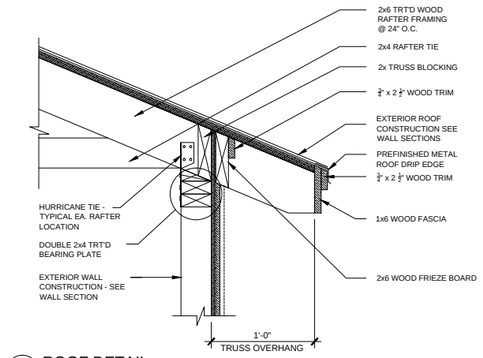

1 ROOF DETAIL
SCALE: 1 1/2" = 1'-0"

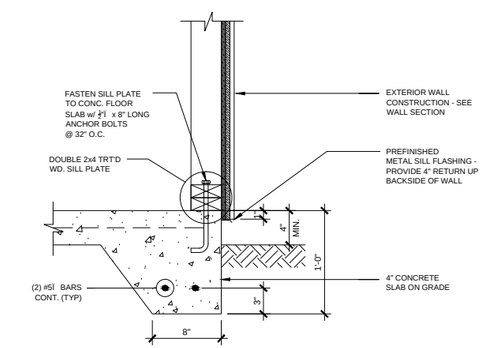

2 FLOOR DETAIL
SCALE: 1 1/2" = 1'-0"

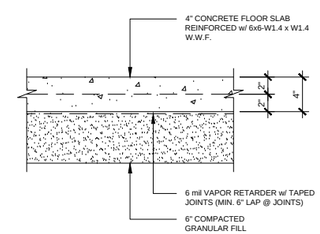

4 TYPICAL 4" CONCRETE FLOOR SLAB
SCALE: 1 1/2" = 1'-0"

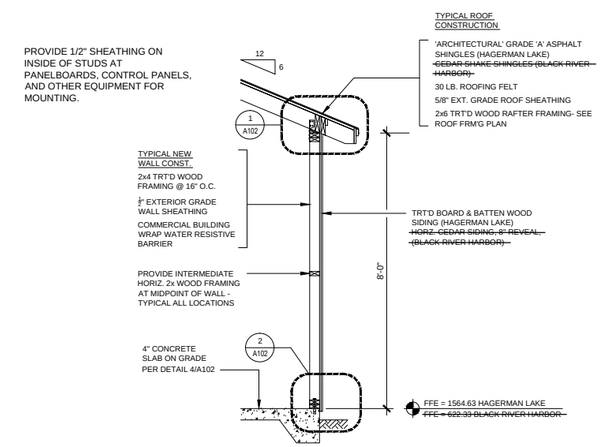

3 EXTERIOR WALL SECTION
SCALE: 1/2" = 1'-0"

CHEQUAMEGON BAY ENGINEERING, INC.
© CBE 2002-2011

ASHLAND, WI
211 6TH STREET WEST
ASHLAND, WI. 54806
PHONE: (715) 682-6004
FAX: (715) 682-6025

MILWAUKEE, WI
1109 N. MAYFAIR RD., SUITE 208
MILWAUKEE, WI. 53226
PHONE: (414) 258-6004
FAX: (414) 258-6154

MINOQUA, WI
7659 HWY. 51 SOUTH,
MINOQUA, WI. 54548
PHONE: (715) 356-9300
FAX: (715) 358-6719

DRAWING NOTES

No.	Revision/Issue	Date
4		
3		
2		
1		

U.S. DEPARTMENT OF AGRICULTURE
FOREST SERVICE
EASTERN REGION
REGION NINE

Project Name
Aquatic Invasive Species Prevention
Boat Washing Facilities Design
~~Black River Harbor and~~ Hagerman Lake Recreational Sites
Ottawa National Forest
~~Bessemer and~~ Iron River Ranger Districts

FINAL SUBMITTAL DOCUMENTS

Drawing Title
Building Details & Electrical Diagrams

Drawn J. SOLBERG	*CBE Project No.* 10-110
Checked J. SAJDAK	*Drawing Sheet No.* A102
CAD Archive No.	
Date 4-29-2011	
Plotter Scale as shown	*Sheet* 7 *of* 7

NOT IN CONTRACT