USCGC NEAH BAY (WTGB-105)

140 FOOT ICEBREAKING TUG

SPECIFICATIONS FOR DRYDOCK REPAIRS

2009

Developed By:
Louis Mikedis

Commander (v)
Maintenance and Logistics
Command, Atlantic
300 E. Main Street, Suite (600)
Norfolk, VA 23510-9102

(16 March 2009 / Revision-0)

TABLE OF CONTENTS

Work Item	Title	Page
	List of Sketches	iii
	Revisions Record	iv
	Consolidated List of References	v
	Consolidated List of Government-furnished Property	ix
	Consolidated List of Critical Inspection Items	x
	Specification Feedback	xi
	Principal Characteristics	xii
	General Requirements	1
1	Perform Ultrasonic Thickness Measurements – Underwater Hull Plating	9
2	Clean and Inspect Fuel Service Tanks	11
3	Clean and Inspect Grey Water Collection and Holding Tanks	14
4	Remove, Inspect, and Reinstall Propeller Shaft	17
5	Remove, Inspect, and Reinstall Propeller	22
6	Renew Depth Indicating Transducer	26
7	Overhaul and Renew Sea Valves	29
8	Remove, Inspect and Reinstall Rudder Assembly	34
9	Preserve Underwater Body – “100%”	37
10	Preserve Stern Tube	40
11	Preserve Superstructure	42
12	Preserve Exterior Exhaust Stack Surfaces	44
13	Routine Drydocking	46

14 Provide Temporary Logistics 50

15 Replace Shaft Seal Assembly (Type F.S.E.) 53

16 Upgrade Lube Oil Purifier 56

17 Overhaul Fuel Tank Level Indicators 62

18 Renew Water-Lubricated Shaft Bearing 70

List of Sketches

Work Item	Sketch Number	Page
16	MLCA SKETCH 26200_SK-1	
16	MLCA SKETCH 26200_SK-2	

Revisions Record

This page is used to record specification revisions, which may have occurred subsequent to a Revision 0 (Rev-0) package. Information listed is intended to provide contractors and field unit personnel a means to ensure all the current specification revision pages are present when reviewing or utilizing this specification package.

DATE	REV#	WORK ITEM#	CHANGES MADE

NOTE: All work item and paragraph numbers listed above for a given revision correspond to same numbers in the previous revision. This revised specification is self-contained with all of the above listed changes incorporated.

Consolidated List of References

The below-listed documents form a part of this specification to the extent specified herein. Approval/publication dates or revision dates/numbers are also identified, to ensure that same document versions are used at time of specification writing and during contract execution. Electronic copies of the latest Editions of MLCA Standard Specifications are available on the Internet and may be accessed at the following Internet Uniform Resource Locator (URL) address: http://www.uscg.mil/mlclant/vdiv/standard_specifications.asp. Guidance for obtaining copies of all other documents referenced herein is provided in the solicitation.

Order of precedence. In the event of conflicts between text of this specification and the applicable references specified herein, order of precedence shall be in accordance with MLCA Standard Specification 0000_STD, paragraph 3.2 (Order of precedence), unless otherwise specified by the Contracting Officer (KO). The Contractor shall immediately notify the KO in writing of any perceived conflicts contained herein. Nothing in these documents, however, supersedes applicable laws and regulations, unless a specific exemption has been obtained.

FEDERAL AND MILITARY SPECIFICATIONS AND STANDARDS

Commercial Item Description (CID) A-A-59313, Nov 2003, Thread Compound; Antiseize, Zinc Dust-Petrolatum

MIL-PRF-16173, 2006, Corrosive Preventive Compound, Solvent Cutback, Cold Application

MIL-DTL-24643, Aug 2002, Cable and Cord, Electrical, Low Smoke, for Shipboard Use, Specification for

MIL-A-18001, May 2005, Anodes, Sacrificial Zinc Alloy (Commercially Accepted - ASTM B418)

DOD-STD-2003-4, Dec 1990, Electric Plant Installations, Standard Methods FOR surface Ships and Submarines, Fig 1B3-1B5, Fig.3B10 through 3B18

OTHER GOVERNMENT DOCUMENTS, DRAWINGS, AND PUBLICATIONS

DOCUMENTS

Coast Guard Maintenance and Logistics Command Atlantic (MLCA),

Standard Specification 0000_STD, 2006 Edition, General Requirements

Coast Guard Maintenance and Logistics Command Atlantic (MLCA) Standard Specification 0740_STD, 2004 Edition, Welding and Allied Processes

Coast Guard Maintenance and Logistics Command Atlantic (MLCA), Standard Specification 8634_STD, 2004 Edition, Drydocking

Coast Guard Maintenance and Logistics Command Atlantic (MLCA), Standard Specification 8635_STD, 2004 Edition, Provide Temporary Logistics

DRAWINGS

Coast Guard Drawing 101 WTGB 111-001, Rev R, Shell Expansion

Coast Guard Drawing 101 WTGB 243-001, Rev T, Shafting and Bearing Arrangement and Details

Coast Guard Drawing 101 WTGB 243-002, Rev -, Propulsion Shafting Arrangement

Coast Guard Drawing 101 WTGB 243-003, Rev -, Stern Tube Seal Type F.S.E.

Coast Guard Drawing 101 WTGB 245-001, Rev C, Propeller and Offsets

Coast Guard Drawing 101 WTGB 245-002, Rev B, Aluminum Pattern One Single Blade

oast Guard Drawing 101 WTGB 256-001, Rev K, Sea Water Circulating Cooling System Diagram

Coast Guard Drawing 101 WTGB 262-003, Rev B, Lube Oil System Modifications Incidental to Spinner II Installation

Coast Guard Drawing 101 WTGB 320-006, Rev D, Power System Single Line

Coast Guard Drawing 101 WTGB 437-001, Rev N, Ship’s Indicator Circuits, Elementary and Isometric Diagram

Coast Guard Drawing 101 WTGB 521-001, Rev H, Firemain, System Diagram

Coast Guard Drawing 101 WTGB 521-002, Rev R, Firemain System,

Arrangements and Details

Coast Guard Drawing 101 WTGB 529-001, Rev K, Bilge and Ballast, System Diagram

Coast Guard Drawing 101 WTGB 529-002, Rev P, Bilge and Ballast, Arrangements and Details

Coast Guard Drawing 101 WTGB 562-001, Rev N, Rudder

Coast Guard Drawing 101 WTGB 562-002, Rev-R, Rudder Stock Bearing Details

Coast Guard Drawing 101 WTGB 633-001, Rev D, Cathodic Protection

Coast Guard Drawing 101 WTGB-801-003, Rev C, Docking Plan

Coast Guard Drawing 101 WTGB 801-006, Rev K, Outboard Profile

Coast Guard Drawing FL 6713-201, Rev B, CRP-V850 Transducer (B-14) Adapter Assembly

NAVSEA Drawing 803-921865, Rev R, Cathodic Protection Hull Zinc Anodes

NAVSEA Drawing 803-1385866, Rev E, Penetration, Bulkhead and Deck

NAVSEA Drawing 804-1385781, Rev E, Hangers, Pipe, for Surface Ships

PUBLICATIONS

Coast Guard Commandant Instruction (COMDTINST) M10360.3 (series), Jun 2006, Coatings and Color Manual

Coast Guard Technical Publication (TP) 3465, Section 437-A, Mar 2001, Tank Level Indicating System, Section 437-B, Level Switch Kit, Section 437-C, Level Indicator

Coast Guard Technical Publication (TP) 4593C, March 2, 2004, SWBS 243, Section A, Seal, Shaft, Type F.S.E.

WYTM Lineshaft Alignment Analysis, Report No. 7715, 12/27/77

Raytheon V850 Color Echosounder, 2nd Edition, Mar 1993, Operation Manual

INDUSTRY STANDARDS

American Society of Mechanical Engineers (ASME) B16.34, 2004, Valves-Flanged, Threaded, and Welding End

ASTM International (ASTM) D1330, 2004, Standard Specification for Rubber Sheet Gaskets

ASTM International (ASTM) D3951, 1998, Standard Practice for Commercial Packaging

ASTM International (ASTM) E797, 2005, Standard Practice for Measuring Thickness by Manual Ultrasonic Pulse-Echo Contact Method

ASTM International (ASTM) F992, 2006, Standard Specification for Valve Label Plates

International Standard For Organization (ISO) 484/2, 1981, Shipbuilding - Ship Screw Propeller - Manufacturing Tolerances - Part 2: Propellers of Diameter Between 0.80 and 2.50 m, Inclusive

Manufacturers Standardization Society of the Valve and Fittings Industry (MSS) SP-61, 2003 Edition, Pressure Testing Of Steel Valves

Manufacturers Standardization Society of the Valve and Fittings Industry (MSS) SP-67, 2002 Edition, Butterfly Valves

Manufacturers Standardization Society of the Valve and Fittings Industry (MSS) SP-72, 1999 Edition, Ball Valves with Flanged or Butt-Welding Ends for General Service

Manufacturers' Standardization Society of the Valve and Fittings Industry (MSS) SP-80, 2003 Edition, Bronze Gate, Globe, Angle and Check Valves

Society of Automotive Engineers (SAE) Aerospace Material Specification (AMS) C6183, 2007, Cork and Rubber Composition Sheet; For Aromatic Fuel And Oil Resistant Gaskets

Consolidated List of Government-furnished Property

The following is a list of property, which the Government will furnish. This list supersedes any other material obligations indicated or implied by referenced drawings.

WORK ITEM	MTI	ITEM DESCRIPTION	NSN/PN	QTY	ESTIMATED COST ($/UNIT)
4	Y	**Propeller Shaft	NSN: 2010-01-089-8123	1 ea.	12,750.00
5	Y	**Propeller	NSN: 2010-01-078-8216	1 ea.	42,812.00
6	N	***V850 Color Echo Sounder	NSN: 5845-01-518-7245	1 ea.	1,423.41
8	Y	**Rudder	NSN: 2040-01-115-3498	1 ea.	32,436.00
8	Y	**Rudder stock	NSN: 2040-01-115-5203	1 ea.	19,337.00
13	N	*Transducer Cover Plate	N/A	1 ea.	500.00
16	N	Type V LOP Spinner II	NSN: 2940-01-F07-1106	1 ea.	25,000.00
18	N	Shaft Seal Assembly	NSN 2040-01-541-7688 P/N 76463-01	1 ea.	37,700.00

***Government-loaned property, which shall be returned to the vessel upon completion of the availability.**
****New or refurbished equipment that the Government may provide for installation in place of existing equipment.**
*****Government-furnished property, which is to be supplied by either the vessel, Electronic Systems Support Unit (ESU) or local Electronic Support Detachment (ESD).**

Consolidated List of Critical Inspection Items

The following is a list of work items, which contain Critical Inspection reports, which the Contractor must complete within the first 25% of the availability contract period (see Std Spec 0000_STD, paragraph 3.6.2 (Inspection report particulars)):

Work Item	Title
1	Perform Ultrasonic Thickness Measurements – Underwater Hull Plating
4	Remove Inspect and Reinstall Propeller Shaft
8	Remove Inspect and Reinstall Rudder Assembly
10	Preserve Stern Tube
17	Overhaul Fuel Tank Level Indicators

Specification Feedback

The intent of this section is to inform all users that a spec feedback mechanism is in place, and is located on the MLCA Naval Engineering Division's website. Spec feedback is a very important part of our overall continuous improvement process, and is crucial to specification development. It will allow spec writers to capture all specification-related lessons learned, and avoid mistakes or ambiguities in follow-on availabilities. All feedback will be reviewed, evaluated, and responded to in a timely manner.

If you have access to the CGWeb (Intranet), please use the following link, which will connect you to the MLCA(v) Naval Engineering website, for submitting your feedbacks:

http://webapps.mlca.uscg.mil/vdiv/specifications/feedback/default.cfm

If you do not have access to the CGWeb (Intranet), you may still submit your feedbacks, using the following web link:

http://www.uscg.mil/mlclant/VDiv/specs/specfeedback.htm

Principal Characteristics

Tug	
Length overall	140' 0"
Length between Perpendiculars	130' 0"
Breadth, Extreme	37' 7-1/4"
Depth, Molded	18' 2-3/8"
Frame Spacing	1' 6"
Full Load (Winter) Draft (at)	12' 1-1/2"
Full Load (Winter) Displacement	687 Long tons (LT)
Full Load (Winter) Center of Gravity	
Above Base (KG)	13' 1"
Full Load Trimming Moment (Forward)	75.6 Ft-LT
Minimum Operating Condition Draft (at)	11' 6-3/8"
Minimum Operating Condition Displacement	640 Long tons
Minimum Operating Condition Center of Gravity	
Above Base (KG)	13' 4-1/4"
Minimum Operating Condition Trimming Moment	
(Forward)	76.8 Ft-LT
Height of Vessel Above DWL	Approx. 62' 0"

NOTE: Values above are for representative tug. Draft and longitudinal lever values provided above are for tugs in fresh water. Longitudinal lever values are provided to adjust tug's design drag of 1.0 feet by the stern.

PROPULSION	
Type	Diesel-electric
Number of Units	2
Total Shaft Horsepower	2500
PROPELLERS	
Number of Propellers	1
Number of Blades	4
Diameter	8' 6"
Pitch	Fixed
Revolutions per Minute	305

General Requirements

1. SCOPE

1.1 Intent. This item describes the general requirements to be followed by the Contractor while conducting this availability.

1.2 Government-furnished property.

None.

2. APPLICABLE DOCUMENTS

Coast Guard Maintenance and Logistics Command Atlantic (MLCA), Standard Specification 0000_STD, 2006 Edition, General Requirements

Coast Guard Maintenance and Logistics Command Atlantic (MLCA) Standard Specification 0740_STD, 2004 Edition, Welding and Allied Processes

Coast Guard Commandant Instruction (COMDTINST) M10360.3 (series), Jun 2006, Coatings and Color Manual

3. REQUIREMENTS

3.1 General. The Contractor shall conform to all requirements specified in Std Spec 0000_STD and in this item, as applicable, during the performance of this availability.

NOTICE!

The requirements of paragraph 3.1 (General) applies to all work under the scope of this contract, whether explicitly stated in work items or not, and also to all other work subsequently authorized by changes, modifications, or extensions to the contract.

3.2 Contractor-provided fire watch personnel. The Contractor shall provide fire watch personnel and equipment.

3.3 Welding and brazing requirements. The Contractor shall perform all welding and allied processes, and nondestructive inspection (NDI), in accordance with Std Spec 0740_STD.

3.4 Term substitution – COTR for COR. The Contractor shall be aware that the term “COR” (Contracting Officer’s Representative) has been discontinued in favor of “COTR” (Contracting Officer’s Technical Representative); consequently, whenever “COR” is encountered in this specification package, including referenced standard specifications and other referenced documents, it shall refer to “COTR”, explicitly.

3.5 Small boat storage. When a small boat (Motor Surf Boat (MSB)/Motor Cargo Boat (MCB)/Rigid Hull Inflatable (RHI) boat) is removed as interference to Contractor-work, the Contractor shall provide a suitable pier side storage cradle, for safely storing said boat.

3.5.1 Cradle design. Ensure that the temporary cradle meets the following criteria:

- Structure is templated from the geometry and arrangement of the contact support areas of the existing cradle onboard the vessel, to provide same or more support area as that which is provided by the existing cradle.

- Arrangement will allow ship’s force to perform maintenance on the small boat, without modification of the cradle.

- Structure is manufactured using the most economical methods and materials available, and is capable of supporting the full weight of the small boat under normal conditions experienced during routine maintenance.

- Contact surfaces are no harder or rougher than the contact surfaces for existing cradle onboard the vessel.

3.5.2 Boat accessibility. Ensure the storage is located in the vicinity of the vessel, and is unrestricted, to allow for ship's force to complete maintenance during normal working hours for the entire performance period.

3.5.3 Boat protection. Provide full protection that can be safely and completely secured when the small boat is left unattended (e.g. watertight cover, storage in a warehouse or shop, etc.), in addition to isolating the boat from the elements.

3.5.4 Boat transportation. Transport each small boat to its storage area within one week of docking the vessel and back to the vessel prior to the end of the performance period.

4. NOTES

4.1 Access to COMDTINST M10360.3. The COMDTINST M10360.3 may be accessed at the following URL address:

http://www.uscg.mil/directives/cim.asp

4.2 QA inspection forms. QA inspection forms (QA-1 thru QA-5), required in Std Spec 0000_STD to be completed and submitted during preservation of “critical-coated surfaces”, are provided at the end of this item.

QA-1: QUALITY ASSURANCE INSPECTION FORM - PRESERVATION CHECKLIST

CHECKPOINT 1 – COATING SYSTEM COMPLIANCE	
	Ensure all coatings are in compliance with COMDTINST M10360.3, Appendix C.
CHECKPOINT 2 - PAINT STORAGE	
	Ensure all coatings are kept at a temperature of 65 to 85°F at all times, unless otherwise specified by the coating manufacturer(s).
CHECKPOINT 3 - AMBIENT CONDITIONS	
	Ensure surface and surrounding temperatures are each between 50 and 90°F for water-based coatings, and 35 and 95°F for other coatings, unless otherwise specified by the coating manufacturer(s).
	Ensure maximum relative humidity (RH) is as follows, from surface preparations through final curing of topcoat: 50% for tanks, voids, and vent plenum; and 85% for all other areas, unless otherwise specified by manufacturer(s).
	Ensure surface temperature is at least 5°F above the dew point, unless otherwise specified by the coating manufacturer(s).
CHECKPOINT 4 - PRE-SURFACE PREPARATION	
	Remove surface contaminants (soluble salts, loose rust, mud, and marine growth) with low pressure fresh water wash down (maximum 5,000 psi). If oil and grease are present, perform solvent cleaning, as per SSPC SP-1.
CHECKPOINT 5 - SURFACE PREPARATION	
	Verify environmental conditions (see CHECKPOINT 3).
	Ensure cleanliness of prepared surface is as per specification (i.e.: SSPC SP-12, SP-11, SP-10…).
	Verify surface anchor profile (1.5-3.5 mils for abrasive-blasted steel surfaces; 1.0 mil (minimum) for power-tool cleaned surfaces; 1.0-1.5 mils for abrasive-blasted aluminum surfaces); and 1.5 –2.5 for surfaces to be coated w/single coat of inorganic zinc).
	Measure soluble salt conductivity (5 measurements per 1000 sqft) – maximum threshold: 70 microsiemens/cm for non-submerged surfaces and 30 microsiemens/cm for submerged surfaces.
CHECKPOINT 6 - PRIMER COAT APPLICATION	
	Verify environmental conditions (see CHECKPOINT 3).
	Verify proper mixing and stand-in (induction) times.
	Ensure no paint is applied when the temperature is expected to drop to freezing before the paint has dried.
	Ensure surfaces are completely dry, unless otherwise allowed by the Coating Manufacturer(s).
	Verify wet film thickness at random, to prevent under or over application.
	Brush out all runs, sags, drips, and puddles.
	Perform visual inspection for holidays and other defects.
CHECKPOINT 7 – STRIPE COAT APPLICATION	
	Verify environmental conditions (see CHECKPOINT 3).
	Ensure overcoating window is as per manufacturer's instructions.
	After primer coat (mist coat after inorganic zinc), brush-apply un-thinned coat of same primer paint over edges, weld seams, cut-outs, and areas of complex geometries @ 3-4 mils wet film thickness (WFT).
CHECKPOINT 8 – TOP COAT APPLICATION	
	Verify environmental conditions (see CHECKPOINT 3).
	Ensure overcoating window is as per manufacturer's instructions.
	Verify proper mixing and stand-in (induction) times, as applicable.
	Verify wet film thickness at random, to prevent under or over application.
	Brush out all runs, sags, drips, and puddles.
CHECKPOINT 9 – FINAL INSPECTION	
	Verify final system dry film thickness.
	Verify system cure for service resumption - U/W Body surfaces: 5-8 hours @ 77 degrees F; Potable water tanks: 7 days @ 77 degrees F.
	Ensure potable water tank exhaust ventilation is maintained continuously from and during coating application through final system cure (minimum 7 days @ 77 degrees F.), to exhaust all solvent to the atmosphere and to prevent solvent entrapment.
CHECKPOINT 10 – RECORD KEEPING	
	Complete, sign, and submit all provided QA Inspection Forms.

Signature of Inspector:_____**Date:**_____

QA-2. QUALITY ASSURANCE INSPECTION FORM
ENVIRONMENTAL READINGS

(Use one sheet for each activity. Record conditions every four hours from before surface preparation to application of final coating system coat)

DATE	TIME	ENTER ACTIVITY *(Surface preparation, primer coat, barrier coat, top coat, etc…)*	LOCATION	DEW POINT	SURFACE TEMP.	% REL. HUMIDITY	SIGNATURE OF INSPECTOR

.**Signature of Inspector:**_____**Date:**_____

QA-3 QUALITY ASSURANCE INSPECTION FORM
SURFACE PROFILE LOG

Vessel Name And Hull Number:_____

Work Item Title:_____

Location Of Work (Including Frame Numbers):_____

Area (Square Feet):_____

Surface Preparation Method:_____

Abrasive Manufacturer And Size:_____

Degreasing Method Used:_____

Number Of Hours Surfaces (Steel Only) Left Unpainted:_____

Sweep blasting performed to remove flash rusting (steel)? Yes/No:_____

Place Surface Profile Replica Tapes In The Spaces Provided Below, To Serve As Permanent QA record. Maintain separate log for each area/location. When an Area Is Divided Into Separate Sections, Maintain A Separate Log for Each Section.		**AVERAGE MILS (IAW ASTM D4417, METHOD C)**
Place Surface Profile Replica Tape Here Reading:_____ mils	• Place Surface Profile Replica Tape Here Reading:_____ mils	
Place Surface Profile Replica Tape Here Reading:_____ mils	Place Surface Profile Replica Tape Here Reading:_____ mils	
Place Surface Profile Replica Tape Here Reading:_____ mils	Place Surface Profile Replica Tape Here Reading:_____ mils	
Place Surface Profile Replica Tape Here Reading:_____ mils	Place Surface Profile Replica Tape Here Reading:_____ mils	

Date and Time:_____

Location of Surface Profile Measurements:_____

Signature of Inspector:_____

QA-4. QUALITY ASSURANCE INSPECTION FORM
SURFACE SOLUBLE SALT CONDUCTIVITY LOG

Vessel Name and Hull Number:_____

Work Item Title:_____

Location of Work (including frame numbers):_____

Area (square feet):_____

DATE	TEST LOCATIONS	CONDUCTIVITY (microsiemens/cm)

Date and Time:_____

Signature of Inspector:_____

QA-5. QUALITY ASSURANCE DATA FORM
DRY FILM THICKNESS (DFT) MEASUREMENTS IAW SSPC PA-2
(Use one sheet for each sequence)

Vessel Name and Hull Number:_____

Work Item Title:_____

Coating Manufacturer:_____

Product Name:_____

Batch Number:_____

Induction Time:_____

Coating System Sequence (Indicate whether: primer, touch-up primer, barrier coat, 3rd coat…):_____

DFT MEASUREMENT NUMBER	LOCATION OF READINGS	MEASURED DFT
1		
2		
3		
4		
5		
6		
7		
8		
9		
10		
11		
12		
13		
14		
15		
16		

Application Method (Airless, Conventional Spray, Rolled):_____

Average DFT: _____

Date and Time: _____

Signature of Inspector: _____

WORK ITEM 1: Perform Ultrasonic Thickness Measurements – Underwater Hull Plating

1. SCOPE

1.1 Intent. This work item describes the requirements for the Contractor to perform thickness measurements of underwater hull plating, by ultrasonic methods.

1.2 Government-furnished property.

None.

2. APPLICABLE DOCUMENTS

ASTM International (ASTM) E797, 2005, Standard Practice for Measuring Thickness by Manual Ultrasonic Pulse-Echo Contact Method

Coast Guard Drawing 101 WTGB 111-001, Rev R, Shell Expansion

3. REQUIREMENTS

3.1 General.

3.1.1 Critical Inspection Report. The Contractor shall submit a critical inspection report (CIR) for the inspections listed in the following paragraph(s), within 24 hours after inspection completion:

- 3.2 (Thickness measurement particulars).

3.1.2 Related work items. The Contractor shall accomplish this work item in conjunction with the following, which are separate work items in this specification package:

- “Routine Drydocking”.
- “Preserve Underwater Body – “100%”.

3.2 Thickness measurement particulars. The Contractor shall perform a total of 250 ultrasonic thickness measurements of U/W body hull plating surfaces, in locations designated by the Coast Guard Inspector. **Submit a CIR**. Ensure that the ultrasonic apparatus, procedure requirements, and report shall be in accordance with ASTM E797, and the report results shall additionally include the following, for each test point:

- Location.
- Original metal thickness.
- Measured metal thickness.
- Percent deterioration (calculation is based on the original metal thickness).

3.3 Apparatus Standardization. The Contractor shall perform ultrasonic equipment standardization in accordance with ASTM E797, Section 7 (Standardization of Apparatus) and Section 8 (Technical Hazards).

4. NOTES

This section is not applicable to this work item.

WORK ITEM 2: Clean and Inspect Fuel Service Tanks

1. SCOPE

1.1 Intent. This work item describes the requirements for the Contractor to clean and inspect the following tank(s):

TYPE OF TANK	LOCATION	CAPACITY (gallons)
Diesel Fuel	4-28-0-F	2,060
Diesel Fuel	4-28-1-F	3,864
Diesel Fuel	4-28-2-F	3,864
Diesel Fuel	4-34-0-F	418
Diesel Fuel	4-38-0-F	2,737
Diesel Fuel	4-40-1-F	2,318
Diesel Fuel	4-40-2-F	2,318
Diesel Fuel	2-45-1-F	1,738
Diesel Fuel	2-45-2-F	1,738
Diesel Fuel	2-76-0-F	1,835

1.2 Government-furnished property.

None.

2. APPLICABLE DOCUMENTS

Society of Automotive Engineers (SAE) Aerospace Material Specification (AMS) C6183, 2007, Cork and Rubber Composition Sheet; For Aromatic Fuel And Oil Resistant Gaskets

3. REQUIREMENTS

3.1 General.

3.1.1 Related work item. The Contractor shall accomplish this work item in conjunction with "Calibrate Tank Level Indicators", which is a separate work item in this specification package.

3.1.2 Tank content removal. The Contractor shall remove and dispose of up to a total of 10,000 gallons of diesel fuel.

NOTICE!

Vessel may come in with less tank fluid contents than specified above.

3.2 Cleaning requirements. The Contractor shall remove tank cover(s) and clean tank interior surfaces free of all foreign materials, such as sediment or sludge, taking care not to damage the coating system (if applicable). Remove cleaning media and residues continuously during the washing process. Remove any residual wash media; and wipe up residual moisture with clean lint-free cloths.

3.3 Tank content and waste disposal. The Contractor shall dispose of tank contents and all cleaning fluids in compliance with all applicable Federal, state, and local laws, ordinances and regulations. Document a complete chain of custody record of the removed tank contents and generated wastes, from the vessel to the point of final destination or delivery. Submit document to the COTR upon completion of work.

3.4 Inspection. The Contractor shall visually inspect all tank interior surfaces, including, but not limited to bulkheads, floor and overhead plating, structural members, manhole cover surfaces, fasteners and gasket seating surfaces. Submit a CFR including the following, as applicable:

- Tank structural condition.
- Inaccessible areas.
- Condition of tank coating, including measurements taken, percentage, location, and type of coating failure.
- Sounding tube and striker plate condition.
- Suction and discharge piping condition.
- Fastener material and condition (correct fastener material is stainless steel).

3.5 Tank closing. The Contractor shall ensure that the tank(s) remain open for approximately 24 hours after completion of all authorized repair and preservation procedures. Notify the COTR at least 24 hours prior to closing the tank(s). After satisfactory inspection by the Coast Guard Inspector and completion of all authorized repairs, close tank manhole cover(s) with new gasket material conforming to AMS-C-6183.

3.6 Operational test – final. After all authorized work is complete, in the presence of the Coast Guard Inspector, the Contractor shall thoroughly test and prove the TLIs to be in satisfactory operating condition (see 4.1 (Equipment operation)). Submit a CFR.

4. NOTES

4.1 Equipment operation. Coast Guard personnel will operate all shipboard machinery and equipment during all operational tests.

WORK ITEM 3: Clean and Inspect Grey Water Collection and Holding Tanks

1. SCOPE

1.1 Intent. This work item describes the requirements for the Contractor to clean and inspect the below designated tank(s):

TYPE OF TANK	LOCATION	CAPACITY (gallons)
Holding Tank	4-32-1-E	1,777
Holding Tank	4-32-2-E	1,777

1.2 Government-furnished property.

None.

2. APPLICABLE DOCUMENTS

ASTM International (ASTM) D1330, 2004, Standard Specification for Rubber Sheet Gaskets

3. REQUIREMENTS

3.1 General.

3.1.1 Related work items. The Contractor shall accomplish this work item in conjunction with the following, which is a separate work item in this specification package:

- “Routine Drydocking”.

3.2 Cleaning requirements. The Contractor shall do the following for the designated tank(s) listed in paragraph 1.1:

3.2.1 Operational test – initial. Prior to commencement of work, the Contractor shall witness an operational pre-test (by Coast Guard personnel) of all designated tank TLIs to demonstrate existing operational condition. Submit a CFR.

3.2.2 Content removal. Remove and dispose of all contents, fluids, and/or residues in accordance with all applicable Federal, state, and local regulations.

3.2.3 Cleaning requirements. Remove manhole cover(s). Clean the designated structure's interior surfaces free of all foreign materials, sediment, and sludge. Remove all persistent residues, taking care not to damage the tank coating system. Remove cleaning media and residues continuously from the tank during the washing process. Remove any residual wash media and wipe up residual moisture with clean lint-free cloths. Collect, contain, and dispose of all wash media, residues, and cleaning materials in accordance with all Federal, state, and local regulations.

3.2.4 Inspection. Visually inspect all interior surfaces; including, but not limited to bulkheads, floor and overhead plating, structural members, manhole cover surfaces, fasteners and gasket seating surfaces. Submit a CFR including the following, as applicable:

- Tank structural condition.
- Inaccessible areas.
- Condition of tank coating, including measurements taken, percentage, location, and type of coating failure.
- Tank level indicator (TLI) and/or float switch condition.
- Suction and discharge piping condition.
- Fastener material and condition (correct fastener material is stainless steel).

3.3 Closing. The Contractor shall ensure that the tanks remain open for approximately 24 hours after completion of the tasks specified above. Notify the COTR at least 24 hours prior to closing the tank(s). After satisfactory inspection by the Coast Guard Inspector and after authorized repairs, if any, reinstall manhole cover(s) with new gasket material conforming to ASTM D1330. The Contractor shall clean and reseal all tank sight glasses, if applicable, prior to reinstallation.

3.4 Operational test – final. After all authorized work is complete, in the presence of the Coast Guard Inspector, the Contractor shall thoroughly test and prove the TLIs to be in satisfactory operating condition (see 4.1 (Equipment operation)). Submit a CFR.

4. NOTES

4.1 Equipment operation. Coast Guard personnel will operate all shipboard machinery and equipment during all operational tests.

WORK ITEM 4: Remove, Inspect, and Reinstall Propeller Shaft

1. SCOPE

1.1 Intent. This work item describes the requirements for the Contractor to remove, inspect, and reinstall the propeller shaft.

1.2 Government-furnished property.

MTI	ITEM DESCRIPT	NSN/PN	QTY	ESTIMATED C ($/UNIT)
Y	**Propeller shaft	NSN: 2010-01-089-8123	1 ea.	12,750.00

2. APPLICABLE DOCUMENTS

Coast Guard Maintenance and Logistics Command Atlantic (MLCA), Standard Specification 0740_STD, 2004 Edition, Welding and Allied Processes

Coast Guard Drawing 101 WTGB 243-001, Rev T, Shafting and Bearing Arrangement and Details

Coast Guard Drawing 101 WTGB 243-002, Rev -, Propulsion Shafting Arrangement

Coast Guard Drawing 101 WTGB 243-003, Rev -, Stern Tube Seal Type F.S.E.

WYTM Lineshaft Alignment Analysis, Report No. 7715, 12/27/77

ASTM International (ASTM) D3951, 1998, Standard Practice for Commercial Packaging

3. REQUIREMENTS

3.1 General.

3.1.1 Critical Inspection Report. The Contractor shall submit a critical inspection report (CIR) for the inspections listed in the following paragraph(s):

- 3.2.2 (Inspections).

3.1.2 Related work item. The Contractor shall accomplish this work item in conjunction with "Remove, Inspect and Reinstall Propeller" and "Replace Shaft Seal Assembly" which are separate work item of this specification.

3.1.3 Interferences. The Contractor shall be aware that interferences in way of work include, but are not limited to the following:

- Deck plates.
- Cat walk over the shaft.
- Rope guard.
- Fairwater.
- Stern tube seal system.

3.2 Work to be accomplished. Using Coast Guard Drawing 101 WTGB 243-001, Coast Guard Drawing 101 WTGB 243-002 and Coast Guard Drwing 243-003 as guidance, as applicable, the Contractor shall accomplish the following for the propeller shaft:

3.2.1 Removals.

- Mark existing shaft position, and match-mark shaft coupling bolts to their respective holes, to facilitate reinstallation procedures.
- Remove the shaft and attached components to a suitable repair facility. Ensure shaft is properly protected and supported at all bearing journals, at all times, until reinstallation.

3.2.2 Inspections. Clean the shaft free of all marine growth, and accomplish the following inspections, as applicable **(Submit CIR)**:

3.2.2.1 Visual. Visually inspect the following components, as applicable, for excessive wear and other mechanical defects such as nicks, cracks, and corrosion:

- Shaft surfaces.
- Bearing surfaces.

- All shaft and propeller associated fasteners.
- Stern tube surfaces.
- Couplings.
- Stern tube/shaft sealing systems.
- Packing ring and glands.

NOTICE!

Before taking shaft runout readings, spin the shaft on a lathe for approximately two hours at the vessel's maximum rated RPM to eliminate any sagging that may have occurred during handling and storage.

3.2.2.2 Measurements.

- Measure keys and keyways.
- Measure all bearing sleeve or journal diameters.
- Measure runouts for shaft taper, shaft straightness, and coupling end diameters.
- With the key in-place, fit the shaft coupling to the shaft in shop and check the contact percentage by bluing. If the contact is less than 80%, the Contractor shall grind and hand stone the coupling hub to achieve a minimum of 80 percent contact, and verify by bluing again. Make a small inscription on the shaft to mark the coupling hub location and use it as a reference in final assembly. Measure and record the coupling face and bore runouts.

3.2.2.3 Nondestructive inspection. Perform nondestructive inspection of all bearing sleeves, shaft tapers, coupling bolts, keyways, and welded repair surfaces, in accordance with Std Spec 0740_STD, Appendix C.

3.2.2.4 Fiberglass covering. Inspect the shaft fiberglass covering for porosity as follows:

3.2.2.4.1 Visually inspect the plastic covering for evidence of lack of adhesion, and other defects.

3.2.2.4.2 Conduct a high voltage spark test of the covering at 250 to 300 volts per mil of glass reinforcement (approximately 15,000 volts for a four-ply covering). Pay particular attention to the joining line between sleeves, couplings, and shafts.

3.2.3 Reinstallation. Reinstall the propeller shaft to its original configuration and accomplish the following, using Coast Guard Drawing 101 WTGB 243-001, as applicable. Machine, grind, or hand-stone couplings, if necessary, to achieve an 80 percent contact.

3.3 Government-furnished shaft. The Contractor shall be aware that the Government reserves the right to furnish a spare propeller shaft to be installed in lieu of the one removed. After a Change Request has been released and authorized by the KO, the Contractor shall transport the spare shaft to a suitable inspection facility, perform the inspections specified in paragraph 3.2.2 (Inspections), and submit a CFR.

3.4 Alignment between coupling flanges. The Contractor shall check the motor/propeller shaft alignment when the vessel is waterborne, using WYTM Lineshaft Alignment Analysis, Report No. 7715 as guidance. Submit CFR.

NOTICE!

Alignment measurements shall be conducted prior to sunrise. If alignment is out of tolerance, physical symptoms such as excessive shipboard vibrations and/or abnormal noise must be present in order to support the measurements. Otherwise, no adjustments are necessary.

3.4.1 Parallel or bore alignment. Position the coupling flanges within 0.5" of each other and place a straight edge at the following points, Top/Bottom, and Outboard/Inboard. The bore or parallel misalignment shall not be greater than 0.005 inches.

3.4.2 Angular or face alignment. Bring the coupling flanges forward to within 0.5" face gap at all points about the diameter of the flanges. Take measurements of face gap at four equally spaced positions on the flange diameters using feeler gauge. Compare diametrically opposite face gap readings top to bottom, and inboard to outboard. Subtract the smaller of diametrically opposite readings from the larger. The resulting difference is proportional to the amount of angular or face misalignment. These readings shall not exceed 0.0005 inches per inch of companion flange outside diameter.

3.5 Post-installation operational testing. In the presence of the Coast Guard Inspector, the Contractor shall thoroughly test and prove the shafting system to be in satisfactory operating condition (see 4.1 (Equipment operation)). Conduct a sea trial to test the propeller shaft in all modes of operation for a minimum of 4 hours. Inspect and correct any excessive leakage, abnormal noise and excessive vibration.

4. NOTES

4.1 Equipment operation. Coast Guard personnel will operate all shipboard machinery and equipment during all operational tests.

WORK ITEM 5: Remove, Inspect, and Reinstall Propeller

1. SCOPE

1.1 Intent. This work item describes the requirements for the Contractor to remove, inspect, and reinstall the propeller.

1.2 Government-furnished property.

MTI	ITEM DESCRIPTION	NSN/PN	QTY	ESTIMATED COST ($/UNIT)
Y	**Propeller	NSN: 2010-01-078-8216	1 ea.	42,812.00

2. APPLICABLE DOCUMENTS

MIL-PRF-16173, 2006, Corrosive Preventive Compound, Solvent Cutback, Cold Application

Coast Guard Drawing 101 WTGB 245-001, Rev C, Propeller and Offsets

Coast Guard Drawing 101 WTGB 245-002, Rev B, Aluminum Pattern One Single Blade

International Standard For Organization (ISO) 484/2, 1981, Shipbuilding - Ship Screw Propeller - Manufacturing Tolerances - Part 2: Propellers of Diameter Between 0.80 and 2.50 m, Inclusive

3. REQUIREMENTS

3.1 Protective and safety measures. The Contractor shall accomplish the following:

- Before removing the propeller or propeller nut, fit a shore from the floor of the dock to one propeller blade near the root, to prevent shock transmission to main motor, as necessary.

- Protect propeller blade edges and blade roots with suitable covers, at all times until reinstallation, to prevent damage.

3.2 Work to be accomplished. The Contractor shall accomplish the following for the propeller, using Coast Guard Drawings 101 WTGB 245-001 and 101 WTGB 245-002 as guidance.

3.2.1 Removal. Remove the propeller to a suitable repair shop.

NOTICE!

If it becomes necessary to apply heat to facilitate propeller removal, ensure that the hub temperature never exceeds 500 degrees Fahrenheit; in addition, ensure that gland, packing ring, fill and vent plugs are removed, and the adjacent shafting and canvas under the blade edge guards are protected from flame impingement.

3.2.2 Inspection. Visually inspect the propeller for any damage, cracks, and other defects. Examine and record the suction and pressure face thickness, blade tip profiles, leading and trailing edges, contours, track, width, diameter, taper, pitch, and keyway of the propeller in accordance with ISO 484/2, Class I. Submit a written CFR.

3.2.3 Polishing. Polish the propeller to a uniform 63 micro-inch RMS finish.

3.2.4 Propeller hub fitting check. In the presence of the Coast Guard Inspector and with the key in place, carefully check the fit of the propeller hub bore to the shaft taper by applying Prussian blue to the shaft taper.

3.2.4.1 Uniform fit. Obtain a uniform fit of 60 percent contact over the taper, with a slightly heavier fit on the larger end. Do not heat the shaft taper to compensate for a poor fit.

3.2.4.2 Propeller fit. If the fit is less than 60 percent, hand grind/stone the propeller hub bore to achieve the required fit.

WARNING!

Do not machine the shaft taper.

3.2.4.3 Location inscription. When 60 percent fit has been obtained, make a small inscription on the shaft to mark the propeller location. Use this mark as a reference in final assembly.

3.3 Propeller Installation.

3.3.1 Cleaning. For the final assembly, the propeller bore and shaft taper surfaces shall be clean and free of bluing, lubricants, dirt, foreign particles, or any other substance, which would hinder moving the propeller along the taper. Install the propeller with dry metal-to-metal contact to obtain the maximum frictional force for torque transmission. Renew the Nitrile O-rings and packing before reassembly, if applicable.

3.3.2 Assembly. With the propeller installed on the taper in the same position as when fitted, install the propeller nut and drive up the propeller until it is advanced forward about 1/16" beyond the inscribed mark as specified in 3.2.4.3 (Location inscription). Lock the nut in place with an appropriate locking device.

NOTICE!

It is prohibited to use grease, oil, or other substances on the taper to help drive the propeller.

3.3.3 Void filling. When applicable, the Contractor shall fill all internal voids in the propeller hub and cap with rust preventive compound conforming to MIL-PRF-16173. Renew all brass plugs.

3.3.4 Adhere to the following warnings:

- Do not heat the propeller hub, to compensate for a poor fit on the shaft taper.
- Do not machine the shaft taper to achieve the required fit.

3.3.4.1 Lock propeller nut in place with new stainless steel lock washer or monel cap screws.

3.4 Propeller change-out. The Contractor shall be aware that the Government reserves the right to furnish a propeller to be installed in-place of the one removed. When the Government exercises this right, the Contractor shall turn over the removed propeller to the Coast Guard PA as a MTI item. If a Change Request has been authorized and released by the KO, the Contractor shall inspect the Government-furnished propeller, and submit a CFR including any additional work that may be required to install the new propeller to the existing shaft.

4. NOTES

4.1 Propeller details. 102" diameter x 72.947" pitch at 0.7R, 4 blades, NiAl bronze alloy, ABS Type 4.

WORK ITEM 6: Renew Depth Indicating Transducer

1. SCOPE

1.1 Intent. This work item describes the requirements for the Contractor to renew the transducer.

1.2 Government-furnished property.

MTI	ITEM DESCRIPTION	NSN/PN	QTY	ESTIMATED COST ($/UNIT)
N	***V850 Color Echo Sounder	NSN: 5845-01-518-7245	1 ea.	1,423.41

2. APPLICABLE DOCUMENTS

Coast Guard Maintenance and Logistics Command Atlantic (MLCA) Standard Specification 0740_STD, 2004 Edition, Welding and Allied Processes

Coast Guard Drawing FL 6713-201, Rev B, CRP-V850 Transducer (B-14) Adapter Assembly

Raytheon V850 Color Echosounder, 2nd Edition, Mar 1993, Operation Manual

3. REQUIREMENTS

3.1 General.

3.1.1 Related work items. The Contractor shall accomplish this work item in conjunction with the following, which are separate work items in this specification package:

- "Preserve Underwater Body".

3.1.2 Protective measures. The Contractor shall accomplish the following tasks:

3.1.2.1 Protect all exposed ends of transmission lines, control lines, connectors, and cables from weather, moisture, and physical damage while they are disconnected from the transducer.

3.1.2.2 Take all necessary measures to protect transducer from damage during the performance of work specified herein. Inform the COTR, in writing, of all damage, if any, that is incurred by the transducer.

3.2 Transducer renewal particulars. The Contractor shall accomplish the following tasks, using the V850 Color Echosounder Technical Manual and Coast Guard Drawing FL-6713-201 as guidance:

3.2.1 Transducer removal. Remove and dispose the removed transducer.

NOTICE!

Do not discard the hull ring adaptor.

3.2.2 New transducer installation. Install new Government-furnished transducer, in place of the removed. Furnish and install new gasket for the transducer.

3.2.2.1 Label plate. Following completion of transducer installation, the contractor shall fabricate a 3/4″ x 3″ x 1/4″ aluminum label plate, engraved with 1/4-inch high numbers stating the installation date. Affix a label plate, using a suitable epoxy cement. Ensure that the label plate is visible and legible, without the need to move equipment or cables.

3.2.2.2 Cleaning of radiating surfaces. Thoroughly clean the transducer radiating surfaces with a strong solution of household detergent to remove any oil, dirt, and all other surface contaminants.

3.3 Transducer seal. The Contractor shall inspect the transducer to ensure the outer circumference of the transducer is installed flush to the hull ring, and the transducer cover plate forms a tight seal with the hull ring.

3.4 Post installation tests. After completion of work, the Contractor shall accomplish the following tasks, in the presence of the Coast Guard Inspector:

3.4.1 Water hose test. Perform a water hose test of all affected boundaries in accordance with Std Spec 0740_STD, Appendix C.

3.4.2 Leak repairs. Observe the transducer for leaks during the vessel re-floating process. Repair all leaks detected.

3.4.3 Operational test. Thoroughly test and prove the new transducer to be in satisfactory operating condition (see 4.1 (Equipment operation)). Submit a CFR.

4. NOTES

4.1 Equipment operation. Coast Guard personnel will operate all shipboard machinery and equipment during all operational tests.

WORK ITEM 7: Overhaul and Renew Sea Valves

1. SCOPE

1.1 Intent. This work item describes the requirements for the Contractor to overhaul and renew below-designated sea valves.

1.1.1 Valves designated for overhaul.

TYPE	SIZE (INCHES)	MATERIAL	DESCRIPTION	FRAME LOCATION/ VALVE NO.	RATED PRESSURE CLASS (#)
BUTTERFLY	10	S/W COOLING	1-SW-2A	30	STRAINER COMP.
BUTTERFLY	10	S/W COOLING	1-SW-2B	30	STRAINER COMP.
BUTTERFLY	10	S/W COOLING	1-SW-1A	30	STRAINER COMP.
BUTTERFLY	10	S/W COOLING	1-SW-1B	30	STRAINER COMP.
BUTTERFLY	8	S/W OVBD CROSS-CONNECT	1-SW-5	30	STRAINER COMP.
BUTTERFLY	8	S/W RECIRC TO SEA CHEST	1-SW-7A	30	STRAINER COMP.
BUTTERFLY	8	S/W RECIRC TO SEA CHEST	1-SW-7B	30	STRAINER COMP.
BUTTERFLY	8	S/W OVERBOARD	1-SW-8A	30	STRAINER COMP.
BUTTERFLY	V 8	S/W OVERBOARD	1-SW-8B	30	STRAINER COMP.

1.1.2 Valves designated for renewal.

TYPE	SIZE (INCHES)	MATERIAL	DESCRIPTION	FRAME LOCATION/ VALVE NO	RATED PRESSURE CLASS (#)
GLOBE	1	SHAFT COOLING	1-SW-12	110	MOTOR ROOM

1.2 Government-furnished property.

None

2. APPLICABLE DOCUMENTS

Coast Guard Maintenance and Logistics Command Atlantic (MLCA), Standard Specification 0000_STD, 2006 Edition, General Requirements

Coast Guard Commandant Instruction (COMDTINST) M10360.3 (series), Coatings and Color Manual

American Society of Mechanical Engineers (ASME) B16.34, 2004, Valves-Flanged, Threaded, and Welding End

ASTM International (ASTM) F992, 2006, Standard Specification for Valve Label Plates

Manufacturers Standardization Society of the Valve and Fittings Industry (MSS) SP-61, 2003 Edition, Pressure Testing Of Steel Valves

Manufacturers Standardization Society of the Valve and Fittings Industry (MSS) SP-67, 2002 Edition, Butterfly Valves

Manufacturers Standardization Society of the Valve and Fittings Industry (MSS) SP-72, 1999 Edition, Ball Valves with Flanged or Butt-Welding Ends for General Service

Manufacturers' Standardization Society of the Valve and Fittings Industry (MSS) SP-80, 2003 Edition, Bronze Gate, Globe, Angle and Check Valves

3. REQUIREMENTS

3.1 General.

3.1.1 Interferences. The Contractor shall be aware that interferences in way of work include, but are not limited to the following:

- Deck plates.
- Piping.

- Insulation.

3.2 Removal. The Contractor shall remove all designated valves in Section 1.1 (Intent). Immediately after valve removal, install blank flanges and gaskets over all openings and secure each flange with at least two bolts, 180 degrees apart.

3.3 Contractor's option for valve renewal. The Contractor may, at no additional cost to the Government, opt to renew valves designated for overhaul if preferable for the Contractor. If the Contractor elects to renew valves designated for overhaul, ensure all new valves are commercial-standard type valves, conforming to the applicable standard listed in Table I (Valve Standards). New valves shall be equivalent (including identical material) to the valve being renewed. Visually inspect the piping and mounting arrangements; and submit a CFR detailing any required modifications to accommodate the new valve(s).

3.4 Overhaul. The Contractor shall accomplish the following as required for each valve designated for overhaul (not including valves the Contractor has opted to renew) to meet the specified valve testing standard:

3.4.1 Disassembly. Disassemble the valve to the extent necessary to perform the required work.

NOTICE!

Complete disassembly of some valves may not be necessary to accomplish overhaul.

3.4.2 Cleaning. Clean all internal surfaces and visually inspect for defects in body and structural material. Inspect the surface finish and condition of seats, disks, parting faces, plugs, and sealing surfaces.

3.4.3 Machining. As applicable; machine, grind, lap and spot-in seat-to-disk to obtain an acceptable leakage rate at or below valve testing standards (see Table I below).

3.4.4 Reassembly. Reassemble the valve using new hardware and software (packing, O-rings, gaskets, seal rings, non-metallic seats, pins, washers, inserts, etc.).

3.4.5 Testing. Test the overhauled valves in accordance with the applicable standards listed in Table I (Valve Standards). Submit a CFR.

TABLE I. VALVE STANDARDS

VALVE TYPE	INDUSTRY STANDARD
Steel Valves	MSS SP-61
Butterfly Valve	MSS SP-67
Ball Valves, Flanged or Butt-Welded Ends	MSS SP-72
Bronze Gate, Globe, Angle and Check Valves	MSS SP-80
All others	ASME B16.34

3.5 Renewal. The Contractor shall renew all designated with commercial-standard type valves, conforming to the applicable standard listed in Table I (Valve Standards).

NOTICE!

The Contractor shall replace any mil-std valves listed for renewal with equivalent commercial standard valves.

3.6 Waster piece inspection. The Contractor shall visually inspect all waster pieces associated with the valves specified for overhaul and/or renewal listed in paragraph 1.1. Evaluate the percentage of remaining material for each waster piece and submit a CFR.

3.7 Valve reinstallation/installation. Upon completion of all authorized work, the Contractor shall accomplish the following:

- Remove and dispose of all blank flanges and associated gaskets.
- Reinstall/install all overhauled and new valves with new gaskets.
- Renew all missing or damaged valve label plates.
- Renew all bolting hardware. Fasteners of Nickel Copper alloy are required for all sea valves.
- Touch-up preserve all new and disturbed surfaces to match existing adjacent areas, in accordance with COMDTINST M10360.3. Abide by all touch-up requirements outlined in paragraph 3.11.9 (Touch-ups and minor coating repairs)) of Std Spec 0000_STD.

3.8 Valve labeling. The Contractor shall install valve label plates on all new valves in accordance with ASTM F992.

4. NOTES

This section is not applicable to this work item.

WORK ITEM 8: Remove, Inspect and Reinstall Rudder Assembly

1. SCOPE

1.1 Intent. This work item describes the requirements for the Contractor to remove, inspect, and reinstall the rudder assembly.

1.2 Government-furnished property.

MTI	ITEM DESCRIPTION	NSN/PN	QTY	ESTIMATED COST ($/UNIT)
Y	**Rudder	NSN: 2040-01-115-3498	1 ea.	32,436.00
Y	**Rudder Stock	NSN: 2040-01-115-5203	1 ea.	19,337.00

2. APPLICABLE DOCUMENTS

Coast Guard Maintenance and Logistics Command Atlantic (MLCA), Standard Specification 0740_STD, 2004 Edition, Welding and Allied Processes

Coast Guard Drawing 101 WTGB 562-001, Rev N, Rudder

Coast Guard Drawing 101 WTGB 562-002, Rev-R, Rudder Stock Bearing Details

3. REQUIREMENTS

3.1 General.

3.1.1 Critical Inspection Report. The Contractor shall submit a critical inspection report (CIR) for the inspections listed in the following paragraph(s):

- 3.3 (Inspections).

3.1.2 Protective measures. The Contractor shall accomplish the following:

- Provide suitable covering to protect all exposed rudder and vessel components against contamination during the performance of the work specified herein.
- Ensure that rudder stock/shaft surfaces are supported in a minimum of two locations, at all times, until reinstallation.

3.2 Removal. The Contractor shall remove, unship and disassemble the rudder assembly.

3.3 Inspections. The Contractor shall clean all rudder components, and accomplish the below-specified inspections **(Submit CIR)**:

3.3.1 Visual. Visually inspect all components, including but not limited to, rudder stock/shaft and blade surfaces, bearings, bearing housing, seals, and grease passages for signs of excessive wear and other mechanical defects such as nicks, cracks, and corrosion, as applicable.

3.3.2 Measurements. Conduct the following measurements:

- Take and record three sets of readings of the rudder bearing journal outside diameter, and bearing housing dimensions.
- Take and record runout measurements on the rudder stock diameter, and in way of the upper, lower and pintle bearings.
- Check the concentricity/alignment between the upper bearing housing and lower bearing housing bores.

3.3.3 Nondestructive. Perform nondestructive inspection of the following components, in accordance with Std Spec 0740_STD, Appendix C:

- Rudder stock keyways and keys.
- Rudder palm plate welds.
- Coupling bolts.
- Rudder stock palm plate welds.

3.4 Reassembly and reinstallation. Upon completion of all inspections and authorized repairs, the Contractor shall reassemble and reinstall the rudder assembly, using Coast Guard Drawings 101 WTGB 562-001 and 101 WTGB 562-002 as guidance, and accomplish the following:

3.4.1 Renew the tiller pins and bushings.

3.4.2 Renew all fasteners, gaskets, o-rings, and seals. Renew packing in rudder stock glands.

3.4.3 Renew the seals in the bearing housings.

3.4.4 Repack the bearings with new molybdenum disulfide grease prior to reinstalling.

3.4.5 Renew all bearing grease fittings. Grease all bearings, in accordance with manufacturer's instructions.

3.5 Alignment. Upon completion of reinstallation, the Contractor shall check the rudder alignment with the pilothouse rudder angle indicator. Ensure that alignment is adjusted to within plus or minus 1/2 degree.

3.6 Government’s option for equipment renewal. The Contractor shall be aware that the Government reserves the right to furnish a new rudder, or rudder stock, or both for installation in place of the existing component, at no additional cost to the Government. If the Government exercises this right, the Contractor shall turn over the designated component to the Coast Guard Property Administrator as an MTI item.

3.7 Operational test. In the presence of the Coast Guard Inspector, the Contractor shall thoroughly test and prove the rudder system to be in satisfactory operating condition (see 4.1 (Equipment operation)). Submit a CFR. Test the steering and rudder system to ensure the rudders travel smoothly throughout the full range of travel without chattering or binding and at the required rate of train.

4. NOTES

4.1 Equipment operation. Coast Guard personnel will operate all shipboard machinery and equipment during all operational tests.

WORK ITEM 9: Preserve Underwater Body – "100%"

1. SCOPE

1.1 Intent. This work item describes the requirements for the Contractor to perform "100%" preservation of the underwater (U/W) body surfaces (see 4.1 (Definitions - U/W body)).

1.2 Government-furnished property.

None.

2. APPLICABLE DOCUMENTS

Coast Guard Maintenance and Logistics Command Atlantic (MLCA), Standard Specification 0000_STD, 2006 Edition, General Requirements

Coast Guard Commandant Instruction (COMDTINST) M10360.3 (series), Coatings and Color Manual

3. REQUIREMENTS

3.1 General.

3.1.1 Related work items. The Contractor shall accomplish this work item in conjunction with the following, which are separate work items in this specification package:

- "Routine Drydocking".
- "Renew Depth Indicating Transducer".
- "Preserve Stern Tube".

3.1.2 Substrate visual inspection. After completion of surface preparation and before applying primer coat, the Contractor shall perform a visual inspection of all exposed metal surfaces; submit a CFR within the first 40 percent completion mark of the availability, to allow for timely completion of unexpected hull repairs.

3.2 Preservation particulars.

3.2.1 Underwater hull and appendage preservation. The Contractor shall prepare and coat the designated surfaces with the system specified for "Underwater Water (U/W) Body and Boot-Top (U/W Body and Boot-Top, Icebreaker <235', in Fresh Water (Excluding Sea Chest)".

3.2.2 Sea chest preservation. The Contractor shall prepare and coat the sea chests with the system specified for "Underwater Water (U/W) Body and Boot-Top (U/W Body Sea Chest, Icebreaker in Fresh Water)", in COMDTINST M10360.3, Appendix A (Cutter and Boat Exterior Painting Systems.

NOTICE!

Be aware that the "Anti-Abrasion Coating, Icebreaker <235'feet" is erroneously referred to as "Anti-Abrasion Coating, Icebreaker, Salt Water <235" in Appendix C.

3.3 Draft mark painting. The Contractor shall paint all draft marks with one white (17925) coat of a "Polysiloxane" or "Silicone Alkyd Enamel" coating, at 2.0-3.0 mils DFT.

NOTICE!

All authorized coating materials and suppliers, and coating colors and color schemes are specified in COMDTINST M10360.3 Appendix C (Authorized Coatings for Use on Cutters and Boats) and Chapter 11 (Cutters and Boats Colors – Exterior and Interior), respectively.

3.4 In-process quality control measures. The Contractor shall abide by all the safety, preservation, and quality control requirements specified in Std Spec 0000_STD, paragraph titled "General preservation requirements.

NOTICE!

Surfaces being preserved are considered "critical-coated surfaces".

3.5 Repair of un-intended damages. The Contractor shall repair all damages, including overspray, incurred to surfaces not covered by the scope of this work item, during surface preparation and paint application procedures.

4. NOTES

4.1 Definition – U/W body: The underwater body is defined as the areas from the bottom of the keel to waterline, including

rudders, transducer hull rings, sea chests, bilge keels, struts, skegs, gratings, bubbler channel and rope guards.

WORK ITEM 10: Preserve Stern Tube

1. SCOPE

1.1 Intent. This work item describes the requirements for the Contractor to preserve the stern tube.

1.2 Government-furnished property.

None.

2. APPLICABLE DOCUMENTS

Coast Guard Maintenance and Logistics Command Atlantic (MLCA), Standard Specification 0000_STD, 2006 Edition, General Requirements

Coast Guard Commandant Instruction (COMDTINST) M10360.3 (series), Coatings and Color Manual

3. REQUIREMENTS

3.1 General.

3.1.1 Critical Inspection Report. The Contractor shall submit a critical inspection report (CIR) for the inspections listed in the following paragraph:

- 3.3 (Inspection).

3.1.2 Related work item(s). The Contractor shall accomplish this work item in conjunction with the following, which are separate work items in this specification package:

- "Remove, Inspect and Reinstall Propeller Shaft(s)".
- “Preserve Underwater Body – “100%””.

3.1.3 Protective measures. The Contractor shall blank the stern tube flange, as necessary, to prevent any entry of debris and dirt into the Engine Room. Take measures to protect bearings and bearing housings from contamination. Upon

completion of work, remove protective material and inspect for the presence of contamination. Clean all equipment and spaces contaminated due to improper protection to original condition of cleanliness.

3.2 Stern tube preservation particulars. The Contractor shall prepare and coat the interior stern tube surfaces in accordance with COMDTINST M10360.3, using the system specified for “Bilges, Cofferdams, and Forepeaks, Steel, Option III”, in Appendix B (Cutter and Boat Interior Paint System).

3.3 Inspection. After surface preparation and before coating application, the Contractor shall perform a visual inspection of the prepared stern tube surfaces, and **submit a CIR.**

3.4 In-process quality control measures. The Contractor shall abide by all the safety, preservation, and quality control requirements specified in Std Spec 0000_STD, paragraph titled “General preservation requirements”.

NOTICE!

Surfaces being preserved are considered “critical-coated surfaces”.

4. NOTES

This section is not applicable to this work item.

WORK ITEM 11: Preserve Superstructure

1. SCOPE

1.1 Intent. This work item describes the requirements for the Contractor to preserve the steel Superstructure surfaces.

1.2 Government-furnished property.

None.

2. APPLICABLE DOCUMENTS

Coast Guard Maintenance and Logistics Command Atlantic (MLCA), Standard Specification 0000_STD, 2006 Edition, General Requirements

Coast Guard Commandant Instruction (COMDTINST) M10360.3 (series), Coatings and Color Manual

Coast Guard Drawing 101 WTGB 801-006, Rev K, Outboard Profile

3. REQUIREMENTS

3.1 General.

3.1.1 Protective measures. The Contractor shall protect non-affected vessel's equipment, components, and spaces during surface preparation and coating application procedures, as specified in paragraph titled "Protective measures" in Std Spec 0000_STD. List of equipment/component includes, but is not limited to:

- Life lines.
- Bulkheads.
- Port lights.
- Deck surfaces.

3.1.2 Substrate inspection. After completion of surface preparation and before coating application, the Contractor shall perform a visual inspection of the prepared substrate, and submit a CFR.

3.1.3 Lead abatement requirements. The Contractor shall be aware of lead content at or in excess of 0.06 percent by weight (0.12 mg/cm^2, or 600 ppm) in the existing Superstructure coating system.

3.1.4 Related work item. The Contractor shall accomplish this work item in conjunction with "Preserve Exterior Exhaust Stack Surfaces", which is a separate work item in this specification package.

3.2 General preservation requirements. The Contractor shall prepare and coat the steel Superstructure surfaces, using the system specified for “Freeboard/Superstructure/Mast (Freeboard/Superstructure) in COMDTINST M10360.3, Appendix A (Cutters and Boats Painting Systems). Select the following:

- “Option I” coating system, for the applicable substrate.
- White (17925) as the top/finish coat color.

3.3 In-process quality control measures. The Contractor shall abide by all the safety, preservation, and quality control requirements specified in Std Spec 0000_STD, paragraph titled “Preservation requirements – general”.

NOTICE!

Surfaces being preserved are considered “critical-coated surfaces”.

4. NOTES

4.1 Definition of superstructure surfaces. The superstructure, as specified herein, is defined as vertical, shown on Coast Guard Drawing 101 WTGB 0801-6, and horizontal surfaces (excluding deck, mast, and stack surfaces), from the Main Deck Level up, which include, but are not limited to the following, as applicable: bulkheads, doors, underside of overhangs and overheads, inboard surfaces of the bulwark, ladders, metallic rails, stanchions, stand offs, brackets, piping, stuffing tubes, structural tees, angles, and gussets.

WORK ITEM 12: Preserve Exterior Exhaust Stack Surfaces

1. SCOPE

1.1 Intent. This work item describes the requirements for the Contractor to preserve the steel exterior exhaust stack surfaces.

1.2 Government-furnished property.

None.

2. APPLICABLE DOCUMENTS

Coast Guard Maintenance and Logistics Command Atlantic (MLCA), Standard Specification 0000_STD, 2006 Edition, General Requirements

Coast Guard Commandant Instruction (COMDTINST) M10360.3 (series), Coatings and Color Manual

Coast Guard Drawing 101 WTGB 801-006, Rev K, Outboard Profile

3. REQUIREMENTS

3.1 General.

3.1.1 Substrate inspection. After completion of surface preparation and before coating application, the Contractor shall perform a visual inspection of the prepared substrate, and submit a CFR.

3.1.2 Lead abatement requirements. The Contractor shall be aware of lead content at or in excess of 0.06 percent by weight (0.12 mg/cm^2, or 600 ppm) in the existing Superstructure coating system.

3.2 General preservation requirements. The Contractor shall prepare and coat the steel Superstructure surfaces, using the system specified for "Freeboard/Superstructure/Mast (Freeboard/Superstructure) in COMDTINST M10360.3, Appendix A (Cutters and Boats Painting Systems). Select the following:

- "Option I" coating system, for the applicable substrate.
- Spar (10371) as the top/finish coat color.

3.3 In-process quality control measures. The Contractor shall abide by all the safety, preservation, and quality control requirements specified in Std Spec 0000_STD, paragraph titled "Preservation requirements – general".

NOTICE!

Surfaces being preserved are considered "critical-coated surfaces".

4. NOTES

This section is not applicable to this work item.

WORK ITEM 13: Routine Drydocking

1. SCOPE

1.1 Intent. This work item describes the requirements for the Contractor to drydock and undock the tender, and perform various drydocking-related inspections and tests.

1.2 Government-furnished property.

MTI	ITEM DESCRIPTION	NSN/PN	QTY	ESTIMATED COST ($/UNIT)
N	*Transducer Cover Plate	N/A	1 ea.	500.00

2. APPLICABLE DOCUMENTS

Coast Guard Maintenance and Logistics Command Atlantic (MLCA), Standard Specification 8634_STD, 2004 Edition, Drydocking

Coast Guard Drawing 101 WTGB-801-003, Rev C, Docking Plan

3. REQUIREMENTS

3.1 General. The Contractor shall drydock and undock the tender, in accordance with Std Spec 8634_STD, using Coast Guard Drawings 101 WTGB 801-003 for guidance. Be aware that the tender must be drydocked within 72 hours of arrival.

3.2 Cutter Conditions. The Contractor shall use the below-listed information for purposes of performing calculations, as described in paragraph 20.2 of Appendix B of Std Spec 8634_STD. (See Note 4.4 (Cutter characteristics)). The Contractor shall be responsible for any change to the cutter's loading condition necessary, for drydocking, to meet the capability of the Contractor's dock.

- TENDER:
- Displacement (LT): 643.85.

- VCG (FT ABL): 13.04
- LCG (FT aft/fwd amidships): 2.63 aft
- Length of supported keel (FT): 106.5.

3.3 Blocking position. The Contractor shall arrange keel and side blocks, as shown on the vessel's docking plan, to facilitate docking of the vessel in blocking position No. 1. Be aware that the keel is not parallel to the baseline. Ensure that the bottom of keel amidships extended shall be 48 inches above the docking facility deck, in lieu of what is required in the drawing.

3.4 Routine work.

3.4.1 The Contractor shall perform the below-designated routine drydocking work, in accordance with Std Spec 8634_STD, Appendix A (Requirements for Routine Drydocking Work). (See Note 4.3 (Paragraph number relationships)). Follow the timeline for work completion and inspection report submission, as specified in Std Spec, 8634_STD, Appendix A, paragraph 20.2 (Inspections and repair work).

SUBSECTION	TITLE
20.1	Underwater hull survey.
20.3	Packing material renewal.
20.7	Void inspection.
20.8	Zinc anode inspection.

3.4.2 The Contractor shall be aware that the Coast Guard Underwater Hull Inspection Board (UWHIB) will recommend the extent of underwater body coating system preservation required, based on the conditions found during the underwater hull survey.

3.5 Hull cleaning – removal of marine growth. The Contractor shall start cleaning the hull within four hours after the vessel has been lifted, to facilitate marine growth removal. Complete all cleaning operations within 24 hours after the vessel has been lifted. The Contractor shall perform an inspection of the bubbler channel. Submit CFR.

3.6 Immediate work. The Contractor shall perform the following work, within 24 hours after the lifting of the vessel.

3.6.1 Temporary protective coverings. As soon as practicable after drydocking and underwater body surface cleaning, install protective coverings, over zinc anodes, hull fairing materials,

stern tube bearings, spool pieces, all exterior deck drains and all overboard discharges. Wrap all bearings and seals immediately after the vessel is drydocked to prevent entry of debris, abrasives, and paint during cleaning, surface preparation, and painting. Insert soft caulking material into the open ends of rudder and shaft stave bearings to prevent entry of grit or other foreign material.

NOTICE!

Do not remove protective covers except for inspection or accomplishing specific work items.

3.6.2 Overboard discharge channeling and plugging. Place drain channels in overboard discharges in use to direct discharges away from the hull. Provide and install wooden plugs or coverings in sea chest spool pieces and overboard discharges not in use to prevent entry of sandblast grit or paint.

3.7 Allowable block timber stresses. The Contractor shall use information contained in the below table, in place of that which is provided in paragraph 20.5.1 (Allowable block timber stresses) of Appendix B, in Std Spec 86340_STD.

WOOD PROPERTIES			
Block Material	Permissible Compressive Stress Perpendicular to the grain (psi)	Permissible Compressive Stress Parallel to the grain (psi)	Proportional limit Perpendicular to the grain (psi)
SOFTWOOD			
Douglas Fir	400	1400	800
Yellow Pine	300	900	700
HARDWOOD			
Red & White Oak	600	1300	1300

NOTICE!

Fuel offloading is not required.

4. NOTES

4.1 Drydock terms. As used in these specifications, all references to drydock facilities include graving drydocks, floating drydocks, marine railways, building ways or vertical lifts.

4.2 Arrival conditions. The Engineer Officer (EO) will advise the Contractor of the actual tank and draft readings when the vessel arrives, and will discuss with the Contractor any ballast requirements necessary to accommodate the vessel draft and trim.

4.3 Paragraph number relationships. The paragraph number for each subsection listed herein relates directly to identical sub-paragraph numbers in Std Spec 8634_STD.

4.4 Cutter Characteristics. The data shown does not represent the arrival displacement or docking displacement of the cutter.

4.7 The keel is not parallel to baseline. The keel is sloped 12" in 132.5 feet. The keel blocks must be built to accommodate this. The "Bottom of Keel Amidships Extended" should be 48".

WORK ITEM 14: Provide Temporary Logistics

1. SCOPE

1.1 Intent. This work item describes the requirements for the Contractor to provide temporary logistics.

2. APPLICABLE DOCUMENTS

Coast Guard Maintenance and Logistics Command Atlantic (MLCA), Standard Specification 8635_STD, 2004 Edition, Provide Temporary Logistics

3. REQUIREMENTS

3.1 General. The Contractor shall provide the below listed temporary logistics, in accordance with Std Spec 8635_STD (see 4.1):

PARAGRAPH TITLE

3.2.1 Office space.

3.2.2 Telephone. (To include long distance line(s).

3.2.3 Parking.

3.2.4 Duty section berthing: 1 male. Duty section berthing shall be provided during disruption of berthing areas.

3.2.5 Light and power.

3.2.6 Compressed air.

3.2.7 Hazardous Waste Disposal.

LIQUIDS (GALLONS)				SOLIDS				
Used Lube Oil	Paint Thinners	Engine Coolant	Bilge Water	Oily Filters	Oily Rags (lbs)	Empty Containers*		
						1-gal	5-gal	55-gal
00	00	00	420	00	50	10	5	1

***Empty containers that previously housed hazardous materials.**

3.2.8 Heavy Lift Equipment: 1 day.

3.2.10 Potable water: 1,000 gallons per day, at 35 psig.

3.2.11 Refuse disposal.

3.2.12 Sewage and Grey Water disposal.

3.2 Additional temporary logistics. If the performance period of the contract is extended by the Contracting Officer, the contractor shall continue to provide all temporary logistics as specified herein for the extension period.

3.3 Light and power revision. In addition to the requirements of Standard Specification 8635_STD, 2004 Edition, Section 3.2.5, the shall adhere to the following additional requirements:

3.3.1 Ungrounded shore power. Except for those cutters with an onboard shore power isolation transformer, only a single ungrounded shore power source shall be used for supplying electrical power, i.e. the generator or the transformer secondary supplying the shore tie must have all phases and any neutral insulated from earth with the frame of such equipment bonded to ground. Parallel transformers or generators shall not be used.

3.3.2 Grounding straps. Immediately after successful drydocking and before connecting the electrical shore tie cable to the vessel, the Contractor shall ground the vessel’s hull to a shore side grounding source as follows:

3.3.2.1 Cable lugs. Tightly secure the grounding cable lugs to the grounding plates; ensure the lug contact area is cleaned thoroughly to bare metal, and that resistance of the connection is a maximum of 125 microhms.

3.3.2.2 Cable size. Ensure that the cross sectional areas of return ground cables are one million circular mils (1000 kcmil) minimum for each 1000 amps for each 100 feet (one or more cables, connected in parallel, may be used to meet the cross sectional area requirements). Return grounding cables smaller in diameter than 85 MCM (No. 1 AWG) are not permitted.

3.3.2.3 Cable insulation. All return grounding cables shall have completely insulated copper conductors with an insulation resistance value of no less than 0.1 megohms.

CAUTION!

The contractor shall not use the vessel’s shore-tie cable when making electrical shore-tie connections.

4. NOTES

4.1 Paragraph number relationships. The paragraph number for each paragraph listed in 3.1 (General) relates directly to the identical sub-paragraph number in Std Spec 8635_STD.

WORK ITEM 15: Replace Shaft Seal Assembly (Type F.S.E.)

1. SCOPE

1.1 Intent. This work item describes the requirements for the Contractor to replace the shaft seal assembly.

1.2 Government-furnished property.

MTI	ITEM DESCRIPTION	NSN/PN	QTY	ESTIMATED COST ($/UNIT)
N	Shaft seal Assembly	NSN 2040-01-541-7688 P/N 76463-01	1 ea.	37,700.00

2. APPLICABLE DOCUMENTS

Coast Guard Maintenance and Logistics Command Atlantic (MLCA), Standard Specification 0000_STD, 2006 Edition, General Requirements

Coast Guard Drawing 101 WTGB 243-002, Rev -, Propulsion Shafting Arrangement

Coast Guard Drawing 101 WTGB 243-003, Rev -, Stern Tube Seal Type F.S.E.

Coast Guard Commandant Instruction (COMDTINST) M10360.3 (series), Coatings and Color Manual

Coast Guard Technical Publication (TP) 4593C, Jan 25, 2008, SWBS 243, Section A, Seal, Shaft, Type F.S.E.

3. REQUIREMENTS

3.1 General.

3.1.1 Technical representative services. The Contractor shall provide an on-site qualified technical representative, familiar with the John Crane Type F.S.E. face seal assembly, who shall advise on manufacturer's proprietary information, dimensions, and clearances associated with the system, assist with proper installation methods, and ensure compliance with manufacturer's procedures and standards during installation of the John Crane Type F.S.E. face seal assembly and shall be present during sea trials. The technical representative shall be a Warsila-Lipps, Inc. technical representative or its licensee.

3.1.2 Interferences. The Contractor shall be aware that interferences in way of work include, but are not limited to the following:

- Propeller shaft.
- Propeller shaft coupling.
- Propeller shaft guard.
- Coupling shaft guard.

3.2 Shaft seal replacement. The Contractor shall accomplish the following tasks, using Coast Guard Drawing 101 WTGB 243-002, Coast Guard Drawing 101 WTGB 243-003 and Coast Guard Technical Publication (TP) 4593C, Sections 4 through 9 as applicable:

3.2.1 Removal. Disassemble, remove and discard the existing shaft seal assembly from the propeller shaft, including bulkhead mounting plate.

3.2.2 Preparations. Accomplish all the requirements listed in section 4 Preparation including but not limited to the following; Remove all burrs and sharp edges from the shaft in the area where the seal will be fitted. Ensure all mating surfaces are machined to the tolerances listed in section 4 of (TP) 4593C.

2.The maximum allowable float (thrust) should be 0.040 inches.

3.2.2.3 Shaft sleeves. After removal of all the seal components, visually inspect the shaft sleeve surfaces.

3.2.2.4 Replacement shaft seal kit. Under the supervision of the technical representative, visually inspect the new Government-furnished seal kit for any defects.

3.2.3 Seal component replacement. Replace the shaft seal with Government-furnished seal components, under the supervision of the Tech Rep. Ensure the following:

- The compression adapter-tool holes are plugged with renewed plugs, as required.

3.2.4 Seal air test. Do the following:

- Operate the inflatable seal and increase pressure to the manufacturer's recommended pressure.
- Visually inspect all pipe joints, to ensure they are tight.
- With seal inflated, shut off all supply valves, and monitor air leakage. Correct any discrepancy noted.
- Deflate the seal.

3.3 Vent piping and raw water supply modifications. The Contractor shall modify the shaft seal ventilation piping and the raw water supply piping to suit the new shaft seal installation. The vent piping shall terminate above the water line as designated by the Coast Guard inspector. Approximately 50 feet of new piping will be required for all piping modifications.

3.4 Touch-up preservation. The Contractor shall prepare and coat all new and disturbed exterior and interior surfaces to match existing adjacent surfaces, in accordance with COMDTINST M10360.3, Appendix A (Cutter and Boat Exterior Painting Systems) and Appendix B (Cutter and Boat Interior Painting Systems), respectively, and as applicable. Abide by all touch-up requirements outlined in paragraph 3.11.9 (Touch-ups and minor coating repairs)) of Std Spec 0000_STD.

3.5 Sea trials. The Contractor shall demonstrate proper operation of the shaft seal assembly. Inspect and correct any water leaks, abnormal noise, and any binding caused by shaft seal in normal shaft operation. Submit a CFR.

4. NOTES

This section is not applicable to this work item.

WORK ITEM 16: Upgrade Lube Oil Purifier

1. SCOPE

1.1 Intent. This work item describes the requirements for the Contractor to upgrade the vessel's lube oil purifier (LOP), in the Engine Room compartment (3-32-0-E).

1.2 Government-furnished property.

MTI	ITEM DESCRIPTION	NSN/PN	QTY	ESTIMATED COST ($/UNIT)
N	Type V LOP Spinner II	NSN: 2940-01-F07-1106	1 ea.	25,000.00

2. APPLICABLE DOCUMENTS

MIL-DTL-24643, Aug 2002, Cable and Cord, Electrical, Low Smoke, for Shipboard Use, Specification for

DOD-STD-2003-4, Dec 1990, Electric Plant Installations, Standard Methods FOR surface Ships and Submarines, Fig 1B3-1B5, Fig.3B10 through 3B18

Coast Guard Maintenance and Logistics Command Atlantic (MLCA), Standard Specification 0000_STD, 2006 Edition, General Requirements

Coast Guard Maintenance and Logistics Command Atlantic (MLCA), Standard Specification 0740_STD, 2004 Edition, Welding and Allied Processes

Coast Guard Commandant Instruction (COMDTINST) M10360.3 (series), Coatings and Color Manual

Coast Guard Drawing 101 WTGB 262-003, Rev B, Lube Oil System Modifications Incidental to Spinner II Installation

Coast Guard Drawing 101 WTGB 320-006, Rev D, Power System Single Line

NAVSEA Drawing 803-1385866, Rev E, Penetration, Bulkhead and Deck

NAVSEA Drawing 804-1385781, Rev E, Hangers, Pipe, for Surface Ships

Society of Automotive Engineers (SAE) J1942-1, 1999, Qualified Hoses for Marine Applications

3. REQUIREMENTS

3.1 General.

3.1.1 Interferences. The Contractor shall be aware that interferences in way of work include, but are not limited to the following:

- Deck plating.
- MDE piping.
- Engine Room bilges.

3.1.2 Protective measures. The Contractor shall furnish and install suitable covering to seal off and protect all non-affected surfaces/equipment and spaces in the vicinity of the work area against weld splatter, slag, grinding sparks, etc during the performance of work. Upon completion of work, remove protective material and inspect for the presence of contaminates and or damage. Clean all equipment and spaces to improper protection, to original condition of cleanliness.

3.2 LOP upgrade particulars. The contractor shall accomplish the following tasks:

3.2.1 Removals. Remove and discard the existing “Sharples” LOP, including associated lube oil (L/O) piping and fittings, as shown on Coast Guard Drawing 101 WTGB 262-3, sheet 4. Remove the existing power supply from 101 WTGB 320-6, sheet 3.

NOTICE!

The existing LOP breaker will become a spare.

3.2.2 New installations. Install the Government-furnished Spinner II in the Engine Room compartment, 3-32-0-E, at approximately frame 44, port as shown on Coast Guard Drawing 101 WTGB 262-3, sheet 5 & 6 and using the enclosed figures at the end of this work item. Fabricate the Spinner II foundation as shown on Coast Guard Drawing 101 WTGB 262-3, sheet 7.

3.2.2.1 L/O piping. Furnish and install new copper and copper nickel piping for air piping, and steel piping for L/O piping of various sizes and lengths, with associated valves and fittings, as shown on Coast Guard Drawing 101 WTGB 262-3. The Contractor shall furnish and install all hydraulic hoses conforming to (SAE) J1942-1 as necessary for the installation of the new L/O Spinner

3.2.2.2 Deck penetrations. Make all bulkhead and deck penetrations as shown on NAVSEA Drawing 803-1385866 and install pipe hangers as shown on NAVSEA Drawing 804-1385781.

3.2.2.3 Electrical connections.

3.2.2.3.1 Cable. Furnish and install LSTSGU-4 (approximately 75 feet per Spinner), as shown on Coast Guard Drawing 101 262-3, sheet 9; and Coast Guard Drawing 101-WTGB-320-006, sheet 5 and the enclosed figure. Ensure the following:

- Cable entrance to non-watertight equipment shall be as shown on DOD-STD-2003-4, Fig. 1B3.
- Cable entrance to watertight equipment shall be as shown on DOD-STD-2003-4, Fig. 1B4.
- Newly installed electric cables shall be bundled and secured in accordance with DOD-STD-2003-4, Fig. 1B5.
- All cables shall be permanently identified, using suitable metal tags or plates upon which the cable designation is embossed, so that the cables may be readily identified for the purpose of maintenance or replacement.

3.2.2.3.2 Motor controller. Install the government furnished motor controller for the new Government-furnished Spinner II, as shown on Coast Guard Drawing 101 262-3, sheet 9.

3.3 Post-installation tests. After all authorized repairs, the Contractor shall accomplish the following tasks:

3.3.1 Hydrostatic test. Hydrostatically test all new and disturbed piping and components of the “Spinner II” piping, system in accordance with Std Spec 0740_STD, Appendix C, “Hydrostatic Test”. Be aware that no leakage or permanent deformation of pressure-containing parts is permissible. Repair all leaks and discrepancies found.

3.3.2 Insulation resistance measurements. Perform insulation resistance measurements on all newly installed cable using 500 volt DC megger, or an ohm meter, before energizing circuit(s). Correct any defects noted, to ensure that reading of conductors to ground and between conductors is of 1 megohm, minimum.

3.3.3 Operational test. In the presence of the Coast Guard Inspector, test and prove the new LOP system to be in satisfactory operating condition (see 4.1 (Equipment operation)). Submit a CFR.

3.4 Touch-up preservation. The Contractor shall prepare and touch-up coat all disturbed surfaces to match existing adjacent surfaces in accordance with COMDTINST M10360.3, Appendix B (Cutter and Boat Interior Painting Systems). Abide by all touch-up requirements outlined in paragraph 3.11.9 (Touch-ups and minor coating repairs)) of Std Spec 0000_STD.

4. QUALITY ASSURANCE

4.1 Equipment operation. Coast Guard personnel will operate all shipboard machinery and equipment during all operational tests.

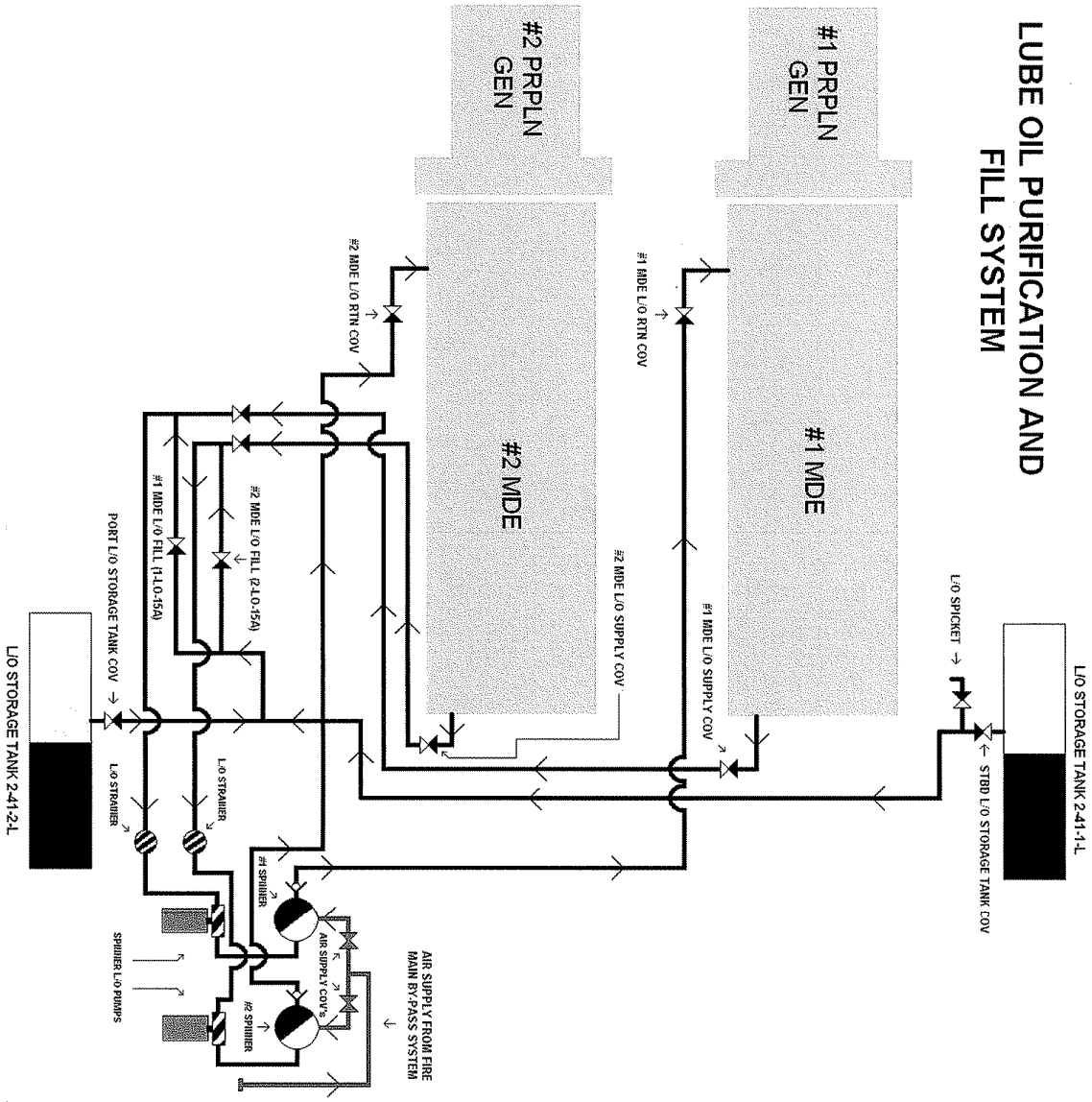

MLCA SKETCH 26200_SK-1

MLCA SKETCH 26200_SK-2

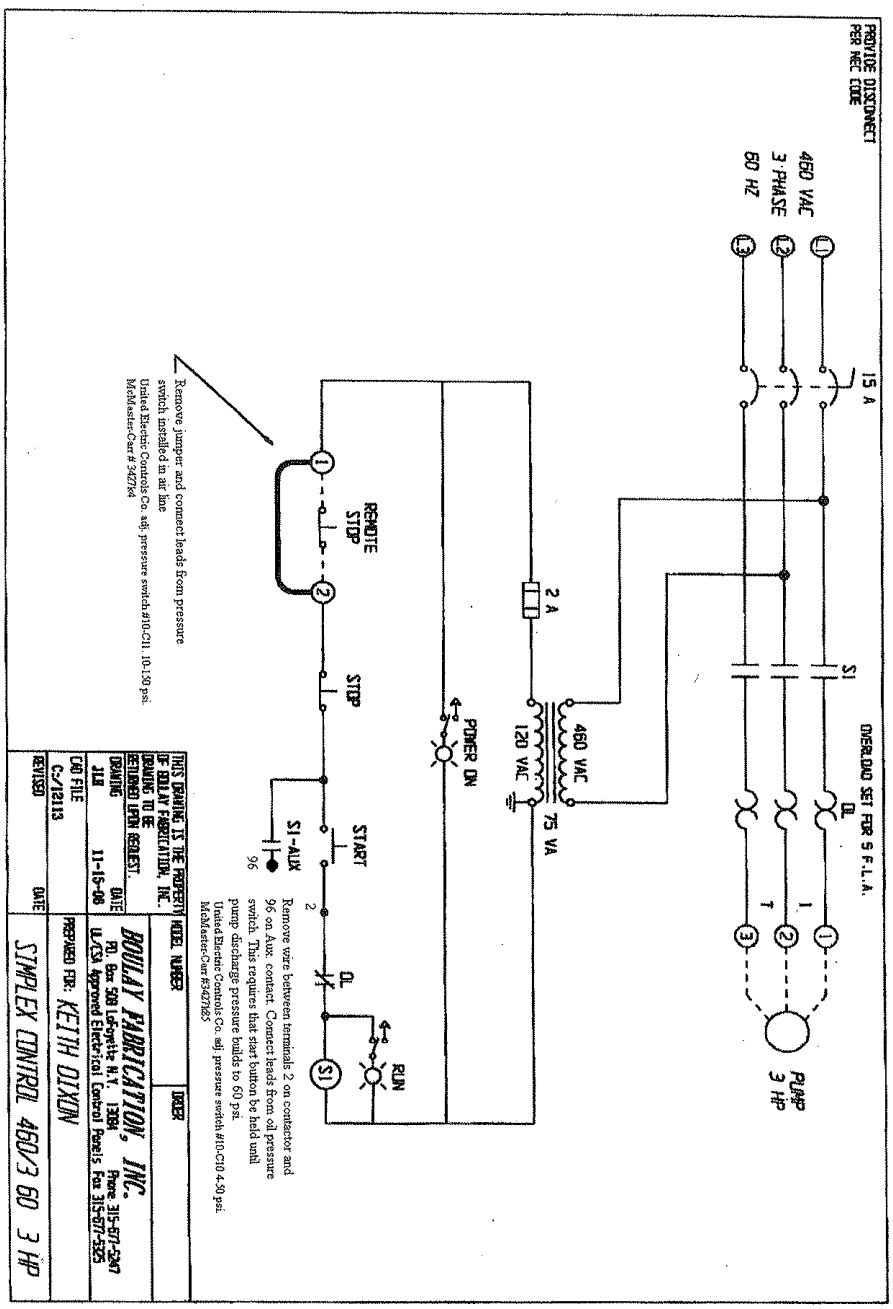

TYPE V CENTRIFUGE SYSTEM-WTGB 140' M.E.

SIMPLEX MOTOR CONTROLLER ELECTRICAL SCHEMATIC

WORK ITEM 17: Overhaul Fuel Tank Level Indicators

1. SCOPE

1.1 Intent. This work item describes the requirements for the Contractor to overhaul and calibrate fuel tank level indicator transmitters and inspect using the enclosed condition found report as guidance for all primary and secondary receivers for the below listed tanks in ECC and Auxiliary Space.

TABLE I

TYPE OF TANK	LOCATION	CAPACITY (gallons)	High Level Setting
Diesel Fuel	4-28-1-F	3,864	98%
Diesel Fuel	4-28-2-F	3,864	98%
Diesel Fuel	4-34-0-F	418	98%
Diesel Fuel	4-38-0-F	2,737	98%
Diesel Fuel	4-40-1-F	2,318	98%
Diesel Fuel	4-40-2-F	2,318	98%
Diesel Fuel	2-45-1-F	1,738	98%
Diesel Fuel	2-45-2-F	1,738	98%
Diesel Fuel	2-76-0-F	1,835	98%

1.2 Government-furnished property.

None.

2. APPLICABLE DOCUMENTS

Coast Guard Drawing 101 WTGB 437-001, Rev N, Ship’s Indicator Circuits, Elementary and Isometric Diagram

Coast Guard Technical Publication (TP) 3465, Section 437-A, Mar 2001, Tank Level Indicating System, Section 437-B, Level Switch Kit, Section 437-C, Level Indicator

3. REQUIREMENTS

3.1 General.

3.1.1 Critical Inspection Report. The Contractor shall submit a critical inspection report (CIR) for the inspections listed in the following paragraph(s):

- 3.2 (Inspect TLI receivers).
- 3.2.1 (Measure required length of TLI cables).

3.1.2 Related work items. The Contractor shall perform this work item in conjunction with “Clean and Inspect Fuel Service Tanks” which is a separate work item in this specification package.

3.1.3 Technical Representative. The Contractor shall provide the services of a Technical Representative (Tech Rep), who is familiar with the Gems Indicating system, and authorized by the manufacturer, to accomplish the following tasks – on site:

- Advise on manufacturer's proprietary information pertinent to the system.
- Assist with proper installation and calibration methods. Refer to the high level sensing setting listed above in Table I above.
- Ensure compliance with manufacturer's procedures and standards during renewal of the TLI transmitters and indicators.

3.1.3.1 The Contractor shall ensure that the Tech Rep possess a résumé of demonstrated experience with the system described above.

3.1.3.2 The Contractor shall submit a copy of the Tech Rep’s résumé and a list of references to the COTR at the Arrival Conference.

3.1.4 Interferences. The Contractor shall be aware that interferences in way of work include, but are not limited to:

- Manhole Covers.
- Deck Plates.

3.2 Inspect TLI receivers. Using the enclosed condition found report, the Contractor shall inspect the primary and secondary TLI receivers located in ECC, Aux I and Aux II space and check for accuracy of meter readings, terminal connections and overall reliability of meters. **(Submit CIR)**:

3.2.1 Measure required length of TLI cables. The Contractor shall measure the length for each TLI transmitter to nearest junction box for the purposes of ordering new cables. **(Submit CIR)**

3.3 Overhaul/calibrate TLI's for the above listed tanks. The Contractor shall label and remove each TLI transmitter from its respective tank and transport to a suitable repair facility for inspection and overhaul/repair. The Contractor shall refer to Coast Guard Drawing 101 WTGB 437-001 and Coast Guard Technical Publication (TP) 3465, SWBS 437, Sections A, B and C for guidance and GEMS technical expertise to overhaul, calibrate, check for condition of cable to and from transmitter and receiver as necessary. Upon completion of all repairs the Contractor shall deliver the repaired TLI transmitters to the vessel and reinstall back into their respective tanks along with associated TLI cables.

3.4 Operational test – final. In the presence of the Coast Guard Inspector, the Contractor shall thoroughly test and prove the tank level indicating system to be in satisfactory operating condition (see 4.1 (Equipment operation)). Submit a CFR.

4. NOTES

4.1 Equipment operation. Coast Guard personnel will operate all shipboard machinery and equipment during all tests.

Standard Calibrations, Inc.
Factory Authorized Gems Repair Center

Gems Sensors

CONDITION REPORT

QF-015

9/20/02
Rev. F

REPORT #	A01	DATE:	8/29/05
TO:	Toledo Ship Repair	ATTN:	Phil Meloche
SHIP:	USCGC Neah Bay	HULL #	WTGB 105
ITEM #	2	Answer Required	yes
PARA. #	3.2.1	Required Report Number	n/a
Standard Item #	n/a	Standard Item Para. #	n/a
SCI#	V51524	Response Requested By (Date):	9/5/05

CONDITIONS FOUND:
Operational testing conducted by manually raising the float indicated that despite the poor condition of in tank cables and the age of in tank transmitters that the TLI's would still provide indication of tank level. There have been many improvements since the 1980's and it is recommended that all transmitters be removed and evaluated. Resistance readings taken indicate shifts in resistance values that would require a transmitter bench top evaluation to positively determine the cause but may be a result of fuel intrusion. New large bore floats also improve reliability and prevent sticking. Additionally tanks contained FSS2 cable that is not to be used in fuel tanks as directed by Mil-L-23886C of February 1996. Tank cables should be replaced with new Raychem cables. The Control Modules (electronic circuit boards) though functioning also show signs of corrosion. New control modules are recommended both due to the condition of the cards and to also update the cards to the latest versions. Circuit changes have been incorporated to increase reliability, provide improved signal dampening, and enhanced isolation. The effort is being made to ensure the customer understands that the system is operational however repair efforts would ensure continued reliability, improve accuracy, and prevent further maintenance needs for TLI's for an extended period of time.

CONDITIONS FOUND:
Tank 4-40-2F – The control module has corrosion on capacitors (CM-5). The lower transmitter has some rust on it, which should be cleaned off.
RECOMMENDED REPAIR:
Control module should be replaced. Cable should be replaced with new Raychem 45480-030-LP cable in nitrile bushings and stainless steel clamps. Remove transmitter for evaluation and report of conditions found.

CONDITIONS FOUND:
Tank 4-28-2F – The control module has corrosion on capacitors (CM-3).
RECOMMENDED REPAIR:
Control module should be replaced. Cable should be replaced with new Raychem 45490-005-005-030-LP T cable in nitrile bushings and stainless steel clamps. Remove transmitters (2) for evaluation and report of conditions found.

Standard Calibrations, Inc.
Factory Authorized Gems Repair Center

Gems Sensors

CONDITION REPORT

9/20/02
Rev. F

QF-015

CONDITIONS FOUND:
Tank 2-76-0F – The cable in the tank is missing a clamp at 1 location, there is paint on the cable. The transmitter has some paint on it, which needs to be cleaned off. It was reported that the tank would lose the reading intermittently while the ship was in operation.
RECOMMENDED REPAIR:
Cable should be replaced with new Raychem 45480-030-LP cable in nitrile bushings and stainless steel clamps. Remove transmitter for evaluation and report of conditions found. Tanks should have the wiring checked between the slave receivers and to (pins 4 & 5) of the primary receiver.

CONDITIONS FOUND:
Tank 4-28-0F – Some cable clamps may be too tight which could puncture the jacket. The lower transmitter has some rust on it, which should be cleaned off.
RECOMMENDED REPAIR:
Cable should be replaced with new Raychem 45490-005-005-030-LP T cable in nitrile bushings and stainless steel clamps. Remove transmitters (2) for evaluation and report of conditions found.

CONDITIONS FOUND:
Tank 4-28-1F – There is slight rusting on the transmitter which should be cleaned, the cable heads are cracked.
RECOMMENDED REPAIR:
Cable should be replaced with new Raychem 45490-005-005-030-LP T cable in nitrile bushings and stainless steel clamps. Remove transmitters (2) for evaluation and report of conditions found.

CONDITIONS FOUND:
Tank 4-34-0F – There is some paint on the transmitter, clean as necessary. It was reported that the tank would lose the reading intermittently while the ship was in operation.
RECOMMENDED REPAIR:
Cable should be replaced with new Raychem 45480-030-LP cable in nitrile bushings and stainless steel clamps. Remove transmitter for evaluation and report of conditions found. Tanks should have the wiring checked between the slave receivers and to (pins 4 & 5) of the primary receiver.

CONDITIONS FOUND:
Tank 4-38-0F – Some cable clamps may be too tight which could puncture the jacket. The transmitter top has some paint on it, which should be cleaned off. It was reported that the tank would lose the reading intermittently while the ship was in operation.
RECOMMENDED REPAIR:
Cable should be replaced with new Raychem 45480-030-LP cable in nitrile bushings and stainless steel clamps. Remove transmitter for evaluation and report of conditions found. Tanks should have the wiring checked between the slave receivers and to (pins 4 & 5) of the primary receiver.
CONDITIONS FOUND:
Tank 4-40-1F – The transmitter looks rusty, clean as necessary. Cable is not clamped in place and may interfere with float travel.
RECOMMENDED REPAIR:
Cable should be replaced with new Raychem 45480-030-LP cable in nitrile bushings and stainless steel clamps. Remove transmitter for evaluation and report of conditions found.

Standard Calibrations, Inc.
Factory Authorized Gems Repair Center

9/20/02
Rev. F

CONDITION REPORT

QF-015

CONDITIONS FOUND:
Tank 2-45-1F – The cable in this tank has a spongy feel which indicates that fuel may have penetrated it.
RECOMMENDED REPAIR:
Cable should be replaced with new Raychem 45480-030-LP cable in nitrile bushings and stainless steel clamps. Remove transmitter for evaluation and report of conditions found.

CONDITIONS FOUND:
Tank 2-45-2F – The cable in this tank is cracking. The transmitter has some rust on it, which should be cleaned
RECOMMENDED REPAIR:
Cable should be replaced with new Raychem 45480-030-LP cable in nitrile bushings and stainless steel clamps. Remove transmitter for evaluation and report of conditions found.

CONDITIONS FOUND:
Dirty Lube Oil Tank – The level switch operated fine, there were no signs of corrosion or rust.
RECOMMENDED REPAIR:
None Required

CONDITIONS FOUND:
Gems RE 37050 Multipanel
The system was "zeroed" and "Full Ref" adjustments accomplished, also an operational test of all tanks was completed. There are many alarm lights burned out on the primary receiver panel, which should be replaced. Control modules are not the current revision. The alarm silence switch is not the correct type for the primary receiver panel.
RECOMMENDED REPAIR:
Replace Alarm lamps with new p/n 387 lamps. Replace control modules with new CM-38139. Alarm silence switch is not a momentary but is functional. The switch must be considered an audible alarm cutout and not an alarm silence switch.

CONDITIONS FOUND:
RE 31330 slave meters located in Auxiliary Machinery Room 2 are in good condition with the exception of the meter glass having been replaced with plexi-glass. The reason that this is a problem is that the meters are 0-200 ua meters. At this low current level they are subject to static charges commonly built up on plastic material.
RECOMMENDED REPAIR:
Replace Meter Glass Bezel Assembly

Very Respectfully,
Chris Fontaine
SCI Field Service Director

USCGC Neah Bay WTGB-105 Tacoma Hulls 400-401

Tank #	Contents	Capacity	Bottom Transmitter	Top Transmitter	Cable	Primary Receiver	Slave Receiver	CM #	CM Type
4-28-0F	Diesel Fuel	2168	XM-36460-060-1000-OL	XM-36485-061-1000-OL	36890-5-5-30	RE-37050	RE-31330	6	38139
4-28-1F	Diesel Fuel	4053	XM-36460-058-1000-OL	XM-36485-058-1000-OL	36890-5-5-30	RE-37050	RE-31330	9	38139
4-28-2F	Diesel Fuel	4053	XM-36460-058-1000-OL	XM-36485-058-1000-OL	36890-5-5-30	RE-37050	RE-31330	3	38139
4-34-0F	Diesel Fuel	448	XM-36460-035-4300-OL		36880-30	RE-37050	RE-31330	2	38139
4-38-0F	Diesel Fuel	2814	XM-36460-041-2700-OL		36880-30	RE-37050	RE-31330	8	38139
4-40-1F	Diesel Fuel	2426	XM-36480-035-4300-OL		36880-30	RE-37050	RE-31330	10	38139
4-40-2F	Diesel Fuel	2426	XM-36480-035-4300-OL		36880-30	RE-37050	RE-31330	5	38139
2-45-1F	Diesel Fuel	1829	XM-36460-070-2000-OL		36880-30	RE-37050	RE-31330	1	38139
2-45-2F	Diesel Fuel	1829	XM-36460-070-2000-OL		36880-30	RE-37050	RE-31330	4	38139
2-76-0F	Diesel Fuel	1932	XM-36480-074-2000-OL		36880-30	RE-37050	RE-31330	7	38139
4-32-0F	Dirty LO	468	Tank uses a level switch similar to IC/RL1-U						
4-19-3W	Pot Water		XM-36460-089-1500-OL		36880-30	RE-37030			
4-19-4W	Pot Water		XM-36460-089-1500-OL		36880-30	RE-37030			

Tacoma Hulls 291-294

4-34-0F	Diesel Fuel	448	XM-36460-042-XXXX-OL		36880-30	RE-37050	RE-31330	2	38139
4-40-2F	Diesel Fuel	2426	XM-36460-035-XXXX-OL		36880-30	RE-37050	RE-31330	5	38139
4-40-1F	Diesel Fuel	2426	XM-36460-035-XXXX-OL		36880-30	RE-37050	RE-31330	10	38139
2-76-0F	Diesel Fuel	1932	XM-36460-065-XXXX-OL		36880-30	RE-37050	RE-31330	7	38139

Notes:
1. Information taken from Dwg WYTM 437-001
2. Resistance values were not specified on drawing, values indicated are suitable for tank size.
3. All cables are "LP" (Low Pressure"
4. All Primary meters are Mfg. By Westinghouse

USCGC Neah Bay WTGB-105
Transmitter Readings

Tank #	R-B Calc	R-B Actual	R-W	B-W	Diff	Diff between calc value & actual R-B reading
4-28-0F	1210	1300	1660	358	-718	90
4-28-1F	1160	1244	1564	323	-643	84
4-28-2F	1160	1248	1570	323	-645	88
4-34-0F	1505	1847	2199	358	-710	342
4-38-0F	1107	1285	1638	355	-708	178
4-40-1F	1505	1519	1872	354	-707	14
4-40-2F	1505	1529	1852	327	-650	24
2-45-1F	1400	1492	1873	387	-768	92
2-45-2F	1400	1476	1836	360	-718	78
2-76-0F	1480	1533	1856	325	-648	53

Notes:
1. Actual transmitter readings are slightly higher than calculated values - This is typical of older 36000 series transmitters.
2. Tanks 4-34-0F & 4-38-0F are considerably higher than the calculated value and should be evaluated at a service facility.

WORK ITEM 18: Renew Water-Lubricated Shaft Bearing

1. SCOPE

1.1 Intent. This work item describes the requirements for the Contractor to renew the water-lubricated bearings for the propeller shaft.

1.2 Government-furnished property.

None

2. APPLICABLE DOCUMENTS

Coast Guard Drawing 101 WTGB 243-001, Rev T, Shafting and Bearing Arrangement and Details

Coast Guard Drawing 101 WTGB 243-002, Rev -, Propulsion Shafting Arrangement

Coast Guard Drawing 101 WTGB 243-003, Rev -, Stern Tube Seal Type F.S.E.

3. REQUIREMENTS

3.1 Related work items. The Contractor shall accomplish this work item in conjunction with the following, which are separate work items in this specification package:

- “Remove Inspect and Reinstall Propeller Shaft”.
- “Replace Shaft Seal Assembly”.
- “Preserve Stern Tube”.

3.2 Bearing renewal. The Contractor shall accomplish the following, using Coast Guard Drawing 101 WTGB 243-001, Coast Guard Drawing 101 WTGB 243-002 and Coast Guard Drawing 101 WTGB 243-003 as guidance:

3.2.1 Removal. Remove the existing water-lubricated bearing; dispose of the removed bearing after visually inspection for any abnormal wear patterns which may indicate misalignment. Submit CFR.

3.2.2 Inspections.

3.2.2.1 Visual. Visually inspect the following:

- Chocking material, if installed in the bearing housings.
- Bearings.
- Bearing housing bores.
- Shaft journal in way of bearings.

3.2.2.2 Measurements. Measure the inner diameter of the bearing housing at the forward, middle and aft positions.

3.2.2.3 Documentation. Submit a CFR after the inspection and measurements.

3.2.3 New bearing installation. The Contractor shall accomplish the following for the water-lubricated bearing, using Coast Guard Drawing 101 WTGB 243-001 as guidance:

3.2.3.1 Alignment check of bearing carrier. In the presence of the Coast Guard Inspector, the Contractor shall check the alignment of the stern tube, forward seal flange, and bearing carrier relative to the shaft centerline including any offsets by running a taut line, using the optical scopes method, or using laser alignment.

3.2.3.2 Machine the new bearings to fit the bearing housing in accordance with the manufacturer's installation recommendations. Drill and tap new bolt holes on the new bearing to match the bearing housing for proper fit.

3.2.3.3 Install the new water-lubricated bearings in accordance with the bearing manufacturer's recommendations, using new monel or type 316 stainless steel fasteners.

3.3 Final measurement. After bearing installation, the Contractor shall:

3.3.1 Measure final bearing clearances at 90-degree intervals around the shaft at the aft end of the bearing .

3.3.2 Submit a CFR after taking the measurements.

3.3.3 Minimum operating bearing clearance shall be as follows:

DIAMETER OF JOURNAL (INCHES)	MINIMUM OPERATING CLEARANCE OF NEW WATER-LUBRICATED BEARINGS (INCHES)
3	0.022
4	0.025
5	0.027
6	0.030
7	0.032
8	0.035
9	0.037
10	0.040
11	0.042
12	0.045
13	0.047
14	0.050

3.4 Inspection and operational test. The Contractor shall accomplish the following:

3.4.1 Visual inspection. Visually inspect the new bearing and record bearing clearance, after shaft reinstallation.

3.4.2 Operational test. Conduct an operational test of the shaft during sea trials, to ensure there is no evidence of binding, abnormal vibration, and noise during sea trials.

3.4.3 Inspection and test documentation. Submit a CFR upon completion of inspection and test.

4. NOTES

This section is not applicable to this work item.