DOVER AIR FORCE BASE

DELAWARE

REPAIR RESERVE HEADQUARTERS FACILITY 202

DOVER AIR FORCE BASE PROJECT NO. 049002

436 CES DOVER AFB

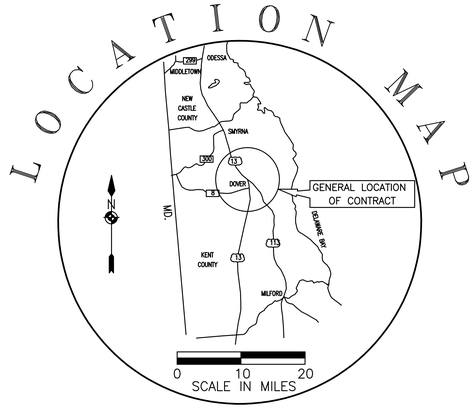

ARCHITECTURAL WORKING DRAWING ABBREVIATIONS

SYMBOLS used as abbreviations

∠	ANGLE
℄	CENTERLINE
d	PENNY
⊥	PERPENDICULAR
PL	PLATE
ø	ROUND

ABBREVIATIONS

ABV	ABOVE
AFF	ABOVE FINISH FLOOR
ACC	ACCESS
AP	ACCESS PANEL
AC	ACOUSTICAL
ADH	ADHESIVE
ADJ	ADJACENT
AGG	AGGREGATE
A/C	AIR CONDITIONING
AL	ALUMINUM
ANC	ANCHOR, ANCHORAGE
AB	ANCHOR BOLT
ARCH	ARCHITECT (URAL)
ASPH	ASPHALT
AUTO	AUTOMATIC
BRG	BEARING
BPL	BEARING PLATE
BM	BENCH MARK
BEL	BELOW
BET	BETWEEN
BIT	BITUMINOUS
BLK	BLOCK
BLKG	BLOCKING
BD	BOARD
BS	BOTH SIDES
BOT	BOTTOM
BRK	BRICK
BLDG	BUILDING
CAB	CABINET
CPT	CARPET
CSMT	CASEMENT
CIPC	CAST-IN-PLACE-CONCRETE
CB	CATCH BASIN
CK	CAULKING
CLG	CEILING
CHT	CEILING HEIGHT
CEM	CEMENT
CTR	CENTER
CER	CERAMIC
CT	CERAMIC TILE
CHAM	CHAMFER
CLR	CLEAR OR CLEARANCE
COL	COLUMN
COMB	COMBINATION
CONC	CONCRETE
CMU	CONCRETE MASONRY UNIT
CONST	CONSTRUCTION
CONT	CONTINUOUS OR CONTINUE
CJT	CONTROL JOINT
CTR	COUNTER
CRS	COURSE (S)
CFT	CUBIC FEET
CYD	CUBIC YARD
DPR	DAMPER
DP	DAMP PROOFING
DL	DEAD LOAD
DEMO	DEMOLISH, DEMOLITION
DTL	DETAIL
DIAG	DIAGONAL
DIAM	DIAMETER
DR	DOOR
DH	DOUBLE HUNG
DN	DOWN
DS	DOWNSPOUT
D	DRAIN
DT	DRAIN TILE
DWR	DRAWER
DWG	DRAWING
DF	DRINKING FOUNTAIN
EF	EACH FACE
E	EAST
ELEC	ELECTRIC (AL)
EP	ELECTRICAL PANELBOARD
EWC	ELECTRIC WATER COOLER
ELEV	ELEVATION
EMER	EMERGENCY
ENC	ENCLOSE
ENT	ENTRANCE
EQ	EQUAL
EQUIP	EQUIPMENT
EXCA	EXCAVATE
EXH	EXHAUST
EXIST	EXISTING
EJT	EXPANSION JOINT
EB	EXPANSION BOLT
EXP	EXPANSION
EXT	EXTERIOR
EPS	EXPANDED POLYSTYRENE
EIFS	EXTERIOR INSULATING FINISHING SYSTEM
FOC	FACE OF CONCRETE
FOF	FACE OF FINISH
FOM	FACE OF MASONRY
FOS	FACE OF STUDS
FF	FACTORY FINISH
FAS	FASTEN, FASTENER
FBD	FIBERBOARD
FRP	FIBERGLASS REINFORCED PLASTIC
FIN	FINISH (ED)
FFE	FINISHED FLOOR ELEVATION
FFL	FINISHED FLOOR LINE
FA	FIRE ALARM
FE	FIRE EXTINGUISHER
FEC	FIRE EXTINGUISHER CABINET
FLG	FLASHING
FLR	FLOOR (ING)
FLCO	FLOOR CLEANOUT
FD	FLOOR DRAIN
FLPL	FLOOR PLATE
FLUR	FLOURESCENT
FTG	FOOTING
FND	FOUNDATION
FR	FRAME (D) (ING)
FUR	FURRED (ING)
GA	GAGE, GAUGE
GALV	GALVANIZED
GC	GENERAL CONTRACT (OR)
GL	GLASS, GLAZING
GB	GRAB BAR
GD	GRADE, GRADING
GVL	GRAVEL
GT	GROUT
GWB	GYPSUM DRYWALL
HBD	HARDBOARD
HDW	HARDWARE
HWD	HARDWOOD
HDR	HEADER
HTG	HEATING
HVAC	HEATING/VENTILATION/AIR CONDITIONING
HD	HEAVY DUTY
HT	HEIGHT
HDPE	HIGH-DENSITY POLYETHELENE
HC	HOLLOW CORE
HM	HOLLOW METAL
HOR	HORIZONTAL
HB	HOSE BIB
HP	HANDICAPPED
HWH	HOT WATER HEATER
INCL	INCLUDE (D) (ING)
ID	INSIDE DIAMETER
INS	INSULATE (D) (ION)
INT	INTERIOR
INV	INVERT
JC	JANITOR'S CLOSET
JT	JOINT
J	JOIST
JS	JOIST SUBSTITUTE
KPL	KICKPLATE
KIT	KITCHEN
KO	KNOCKOUT
LBL	LABEL
LAD	LADDER
LB	LAG BOLT
LAM	LAMINATE
LAV	LAVATORY
LH	LEFT HAND
L	LENGTH
LT	LIGHT
LTL	LINTEL
LVR	LOUVER
LL	LIVE LOAD
MH	MANHOLE
MACH	MACHINE
MANUF	MANUFACTURE (ER)
MO	MASONRY OPENING
MTL	MATERIAL (S)
MAX	MAXIMUM
MECH	MECHANIC (AL)
MEP	MECHANICAL, ELECTRICAL, PLUMBING
MBR	MEMBER
MMB	MEMBRANE
MET	METAL
MFD	METAL FLOOR DECKING
MTFR	METAL FURRING
MRD	METAL ROOF DECKING
MTHR	METAL THRESHOLD
MWK	MILLWORK
MIN	MINIMUM
MIR	MIRROR
MISC	MISCELLANEOUS
MOD	MODULAR
MLD	MOLDING, MOULDING
MR	MOISTURE RESISTANT
MT	MOUNT (ED) (ING)
MOV	MOVABLE
NAT	NATURAL
NOM	NOMINAL
	NORTH
NIC	NOT IN CONTRACT
NTS	NOT TO SCALE
OBS	OBSCURE
OC	ON CENTER (S)
OPG	OPENING
OJ	OPEN-WEB JOIST
OPP	OPPOSITE
OPH	OPPOSITE HAND
OD	OUTSIDE DIAMETER
OA	OVERALL
OH	OVERHEAD
PNT	PAINT (ED)
PNL	PANEL
PB	PANIC BAR
PTD	PAPER TOWEL DISPENSER
PTR	PAPER TOWEL RECEPTOR
PAR	PARALLEL
PDB	PARTICLE BOARD
PTN	PARTITION
PV	PAVE (D) (ING)
PTMT	PAVEMENT
PERF	PERFORATE
PERI	PERIMETER
PLAS	PLASTER
PLAM	PLASTIC LAMINATE
PL	PLATE
PLYWD	PLYWOOD
POC	POINT OF CONTACT
PVC	POLYVINYL CHLORIDE
PCF	POUNDS PER CUBIC FOOT
PLF	POUNDS PER LINEAL FOOT
PSF	POUNDS PER SQUARE FOOT
PSI	POUNDS PER SQUARE INCH
PSL	PARALLEL STRAND LUMBER
PCC	PRE-CAST CONCRETE
PFB	PREFABRICATED
PFN	PREFINISHED
PRF	PREFORMED
PREP	PREPARE
PT	PRESSURE TREATED WOOD
PL	PROPERTY LINE
RBT	RABBET, REBATE
RL	RAIL (ING)
REF	REFERENCE
RFL	REFLECT (ED) (IVE) (OR)
REFR	REFRIGERATOR
REG	REGISTER
RE	REINFORCE (D) (ING)
RCP	REINFORCED CONCRETE PIPE
REM	REMOVE
RES	RESILIENT
RET	RETURN
RA	RETURN AIR
R.S.	REVERSE (SIDE)
REV	REVISION (S), REVISED
RH	RIGHT HAND
ROW	RIGHT OF WAY
R	RISER
RFL	ROOF HATCH
RFG	ROOFING
RM	ROOM
RO	ROUGH OPENING
RBL	RUBBLE STONE
SAT	SUSPENDED ACOUSTICAL TILE
SCH	SCHEDULE
SCN	SCREEN
SNT	SEALANT
SEC	SECTION
SSK	SERVICE SINK
SHTH	SHEATHING
SHT	SHEET
SG	SHEET GLASS
SH	SHELF, SHELVING
SHO	SHORE (D) (ING)
SIM	SIMILAR
SL	SLEEVE
SC	SOLID CORE
S	SOUTH
SPC	SPACER
SPL	SPECIAL
SPEC	SPECIFICATION (S)
SQ	SQUARE
SS	STAINLESS STEEL
STD	STANDARD
STA	STATION
ST	STEEL
STO	STORAGE
SD	STORM DRAIN
STRUCT	STRUCTURAL
SSSMR	STRUCTURAL STANDING SEAM METAL ROOF
SUS	SUSPENDED
SYM	SYMMETRY (ICAL)
SYN	SYNTHETIC
SYS	SYSTEM
TEL	TELEPHONE
TGL	TEMPERED GLASS
THK	THICK (NESS)
THR	THRESHOLD
TPTN	TOILET PARTITION
TPD	TOILET PAPER DISPENSER
TOL	TOLERANCE
T&G	TONGUE AND GROOVE
TSL	TOP OF SLAB
TST	TOP OF STEEL
TOM	TOP OF MASONRY
TR	TRANSOM
TRANS	TRANSVERSE
T	TREAD
TYP	TYPICAL
UC	UNDERCUT
UNF	UNFINISHED
UR	URINAL
UNO	UNLESS NOTED OTHERWISE
VB	VAPOR BARRIER
VNR	VENEER
VERT	VERTICAL
VIN	VINYL
VCT	VINYL COMPOSITION TILE
VAT	VINYL ASBESTOS TILE
VB	VINYL BASE
VT	VINYL TILE
WSCT	WAINSCOT
WH	WALL HUNG
WC	WATER CLOSET
WP	WATERPROOFING
WS	WATERSTOP
WWF	WELDED WIRE FABRIC
W	WEST
WTH	WIDE, WIDTH
W/	WITH
WIN	WINDOW
WD	WOOD
WB	WOOD BASE

MATERIAL LEGEND

- NEW MASONRY WALL
- NEW METAL STUD WALL
- NEW WOOD STUD WALL
- BRICK IN ELEVATION
- ROOF SHINGLES IN ELEVATIONS
- CONCRETE IN PLAN OR DRYWALL IN SECTION
- CONCRETE IN SECTION
- EARTH IN SECTION
- POROUS FILL IN SECTION
- WOOD (FINISH) IN SECTION
- WOOD (ROUGH) IN SECTION
- BRICK IN SECTION
- CONCRETE MASONRY UNIT IN SECTION
- BATT INSULATION IN SECTION
- RIGED INSULATION IN SECTION

GRAPHIC SYMBOL LEGEND

- EXISTING WALL AND DOOR TO BE REMOVED
- EXISTING WALL AND DOOR TO REMAIN
- PROPERTY LINE
- CENTER LINE
- HIDDEN LINE
- DEMOLITION
- COLUMN LINE (A)
- REVISION: WINDOW, & ROOM SYMBOLS (A) (101)
- SIGNAGE TYPE (2)
- LINTEL NUMBER: AND EQUIPMENT NUMBER (1001) (1001)
- LEVEL LINE
- EXTERIOR/INTERIOR ELEVATION (E1 A1 A1)
- DETAIL OR WALL SECTION (E1 A1 A1)
- PROJECT NORTH ARROW (PN)

INDEX OF DRAWINGS

SHT 1	CS	COVER SHEET	SHT 32	M9	HW SYSTEM CONTROL DIAGRAMS & SEQUENCE OF OPERATION
SHT 2	C1.1	EXISTING CONDITIONS/ DEMO	SHT 33	M10	MECHANICAL PIPING DIAGRAMS
SHT 3	C2.1	SITE PLAN	SHT 34	M11	MECHANICAL DETAILS (1 OF 2)
SHT 4	S1	FOUNDATION PLAN & DETAILS	SHT 35	M12	MECHANICAL DETAILS (2 OF 2)
SHT 5	S2	FRAMING PLANS & DETAILS	SHT 36	PD1	PLUMBING DEMOLITION FLOOR PLANS
SHT 6	D1	DEMOLITION PLANS	SHT 37	PD2	PLUMBING DEMOLITION PARTIAL FLOOR PLANS
SHT 7	A1	FIRST FLOOR & SECOND FLOOR PLANS	SHT 38	P1	PLUMBING FLOOR PLANS
SHT 8	A1.1	FIRST & SECOND FLOOR REFLECTED CLG. PLANS	SHT 39	P2	PLUMBING PARTIAL FLOOR PLANS
SHT 9	A1.2	ROOF PLANS	SHT 40	P3	PLUMBING SANITARY RISER DIAGRAMS
SHT 10	A2	EXTERIOR ELEVATIONS	SHT 41	P4	PLUMBING EQUIPMENT SCHEDULES & DETAILS
SHT 11	A3	NEW ENT. CANOPIES & MACHINE RM SECTIONS/DETAILS	SHT 42	E0.1	ELECTRICAL NOTES AND LEGENDS
SHT 12	A3.1	NEW STAIR PLANS/SECTIONS/DETAILS	SHT 43	E0.2	ELECTRICAL NOTES
SHT 13	A3.2	ELEVATOR PLAN/SECTIONS/DETAILS	SHT 44	ED1	ELECTRICAL DEMOLITION FLOOR PLANS
SHT 14	A4	WALL SECTIONS & WALL TYPES	SHT 45	ED2	ELECTRICAL DEMOLITION FLOOR PLANS
SHT 15	A5	ENLARGED PLANS & INTERIOR ELEVATIONS	SHT 46	ED3	ELECTRICAL DEMOLITION FLOOR PLANS
SHT 16	A5.1	ENLARGED PLANS & INTERIOR ELEVATIONS	SHT 47	E1	ELECTRICAL POWER PLAN, 1ST FLOOR
SHT 17	A6	DETAILS	SHT 48	E2	ELECTRICAL LIGHTING PLAN, 1ST FLOOR
SHT 18	A6.1	DETAILS	SHT 49	E3	ELECTRICAL HVAC PLAN, 1ST FLOOR
SHT 19	A7	FINISH & DOOR SCHEDULES & DOOR DETAILS	SHT 50	E4	ELECTRICAL POWER & LIGHTING PLAN, 2ND FLOOR
SHT 20	A7.1	WINDOW DETAILS	SHT 51	E5	ELECTRICAL SCHEDULES
SHT 21	MP0	MECHANICAL & PLUMBING NOTES & LEGENDS	SHT 52	E6	ELECTRICAL RISER DIAGRAM
SHT 22	MD1	MECHANICAL DEMOLITION FIRST FLOOR HVAC	SHT 53	E7	ELECTRICAL DETAILS
SHT 23	MD2	MECHANICAL DEMOLITION SECOND FLOOR HVAC	SHT 54	FP0	FIRE PROTECTION LEGEND & CONSTRUCTION NOTES
SHT 24	M1	NEW MECHANICAL FIRST FLOOR HVAC DESIGN	SHT 55	FPD1	FIRE PROTECTION DEMOLITION 1ST FLOOR
SHT 25	M2	NEW MECHANICAL PLANS 2ND FLOOR & ROOF	SHT 56	FP1	FIRE PROTECTION PLANS - 1ST FLOOR
SHT 26	M3	NEW MECHANICAL FIRST FLOOR PIPING DESIGN	SHT 57	FP2	FIRE PROTECTION DEMO & NEW WORK 2ND FLOOR
SHT 27	M4	NEW MECHANICAL SECOND FLOOR PIPING DESIGN & PARTIAL MECH. ROOM PLANS			
SHT 28	M5	MECHANICAL EQUIPMENT SCHEDULES (1 OF 2)			
SHT 29	M6	MECHANICAL EQUIPMENT SCHEDULES (2 OF 2)			
SHT 30	M7	AHU SYSTEM & VAV BOX CONTROL DIAGRAM & SEQUENCE OF OPERATION			
SHT 31	M8	CHW SYSTEM CONTROL DIAGRAM & SEQUENCE OF OPERATION			

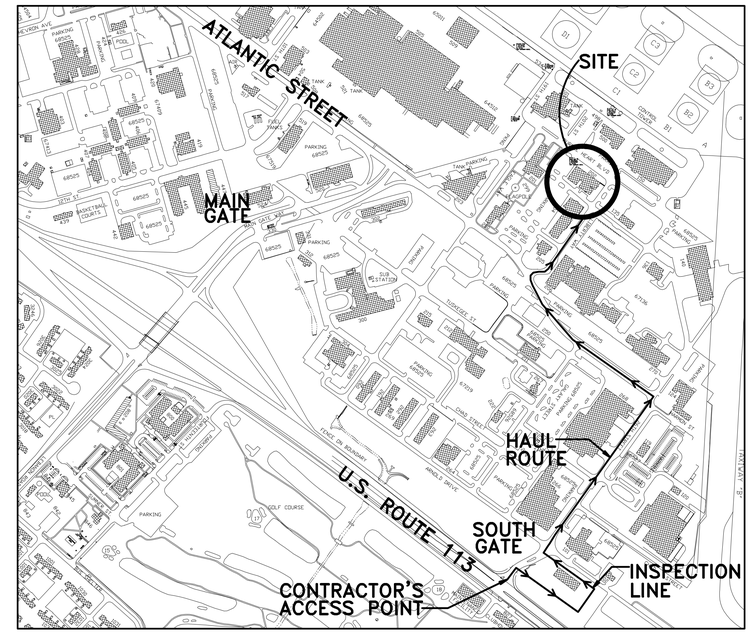

VICINITY MAP

0' 120' 240' PN

SECTION LETTER / DETAIL NUMBER / ELEVATION NUMBER

SHEET ON WHICH SECTION / DETAIL / ELEVATION IS DRAWN

SHEET ON WHICH SECTION / DETAIL / ELEVATION ORIGINATES

DEDC Delaware Engineering and Design Corp.
315 South Chapel Street -Newark, DE 19711
Phone: (302) 738-7172 FAX: (302) 738-7175
Website: www.dedc-eng.com

DAVIS BOWEN & FRIEDEL, INC.
ARCHITECTS, ENGINEERS & SURVEYORS
SALISBURY,MARYLAND MILFORD, DELAWARE
410.543.9091 302.424.1441

AIR MOBILITY COMMAND
DOVER AIR FORCE BASE, DELAWARE

REPAIR RESERVE HEADQUARTERS FACILITY 202

SUBMITTED CHIEF ENGINEER		APPROVED CHIEF ENGINEER		APPROVED COMMANDER
DATE: 6/28/10	PROJECT #: 049002	PLOT SCALE: AS NOTED	DRAWN BY: M. BAUMAN	DESIGNED BY: M. WHEEDLETON

USING AGENCY	SAFETY	BIO ENVIRONMENTAL ENG	CORROSION ENG	FIRE CHIEF	CONSTRUCTION MGT.	BASE COMMUNICATIONS	SECURITY POLICE	ENVIRONMENTAL	PROTECTIVE COATING	OPERATIONS	DESIGN MANAGEMENT
PRINT NAME	PRINT NAME	PRINT NAME	PRINT NAME	PRINT NAME	PRINT NAME	PRINT NAME	PRINT NAME	PRINT NAME	PRINT NAME	PRINT NAME	PRINT NAME

REV	DATE	DESCRIPTION	DRAWN	APPR'D
B	01JUL10	ISSUED FOR BID	SJL	CDS
A	11MAY10	ISSUED FOR REVIEW	SJL	CDS

COVER SHEET

SHT 1 OF 57

CS

LEGEND

EXISTING:		NEW:
	DITCH, SWALE	
× 45.45	SPOT ELEVATION	
45	CONTOUR	
	ROAD, CURB	
	SIDEWALK	
24"SD	STORM DRAIN, CATCH BASIN, MANHOLE	
EG	GAS MAIN, VALVE	
8" ES	SEWER MAIN, MANHOLE, & CLEANOUT	
6"EW	WATER MAIN, VALVE, HYDRANT	
PP	UTILITY POLE	
	LIGHTING	
	SIGN	
	BUILDING	
	PAVEMENT	
REMOVAL ITEMS		

ABBREVIATIONS

EMH	ELECTRIC MANHOLE
SWMH	STORMWATER MANHOLE
SMH	SEWER MANHOLE
WV	WATER VALVE
EW	EXISTING WATER
TC	TOP OF CURB
BC	BOTTOM OF CURB
ELEV	ELEVATION
CONC	CONCRETE
RCP	REINFORCED CONCRETE PIPE
ES	EXISTING SEWER
GV	GAS VALVE
SCO	SEWER CLEAN OUT
EG	EXISTING GAS
GABC	GRADED AGGREGATE BASE COURSE
CMP	CORRUGATED METAL PIPE
MJ	MECHANICAL JOINT

NOTE: ALL CONCRETE SIDEWALK TO BE REMOVED TO THE NEAREST JOINT BEYOND THE LIMITS SHOWN ON THIS PLAN.

REV	DATE	DESCRIPTION	DRAWN	APPR'D
B	01JUL10	ISSUED FOR BID	SJL	CDS
A	11MAY10	ISSUED FOR REVIEW	SJL	CDS

AIR MOBILITY COMMAND

DOVER AIR FORCE BASE, DELAWARE

TITLE: REPAIR RESERVE HEADQUARTERS FACILITY 202

SUBMITTED	APPROVED	APPROVED
CHIEF ENGINEER	CHIEF ENGINEER	COMMANDER

DATE:	PROJECT #:	PLOT SCALE:	DRAWN BY:	DESIGNED BY:
4-30-10	049002	AS NOTED	DMH	M. WHEEDLETON

EXISTING CONDITIONS / DEMO

W-4497

SHT 2 OF 57

C1.1

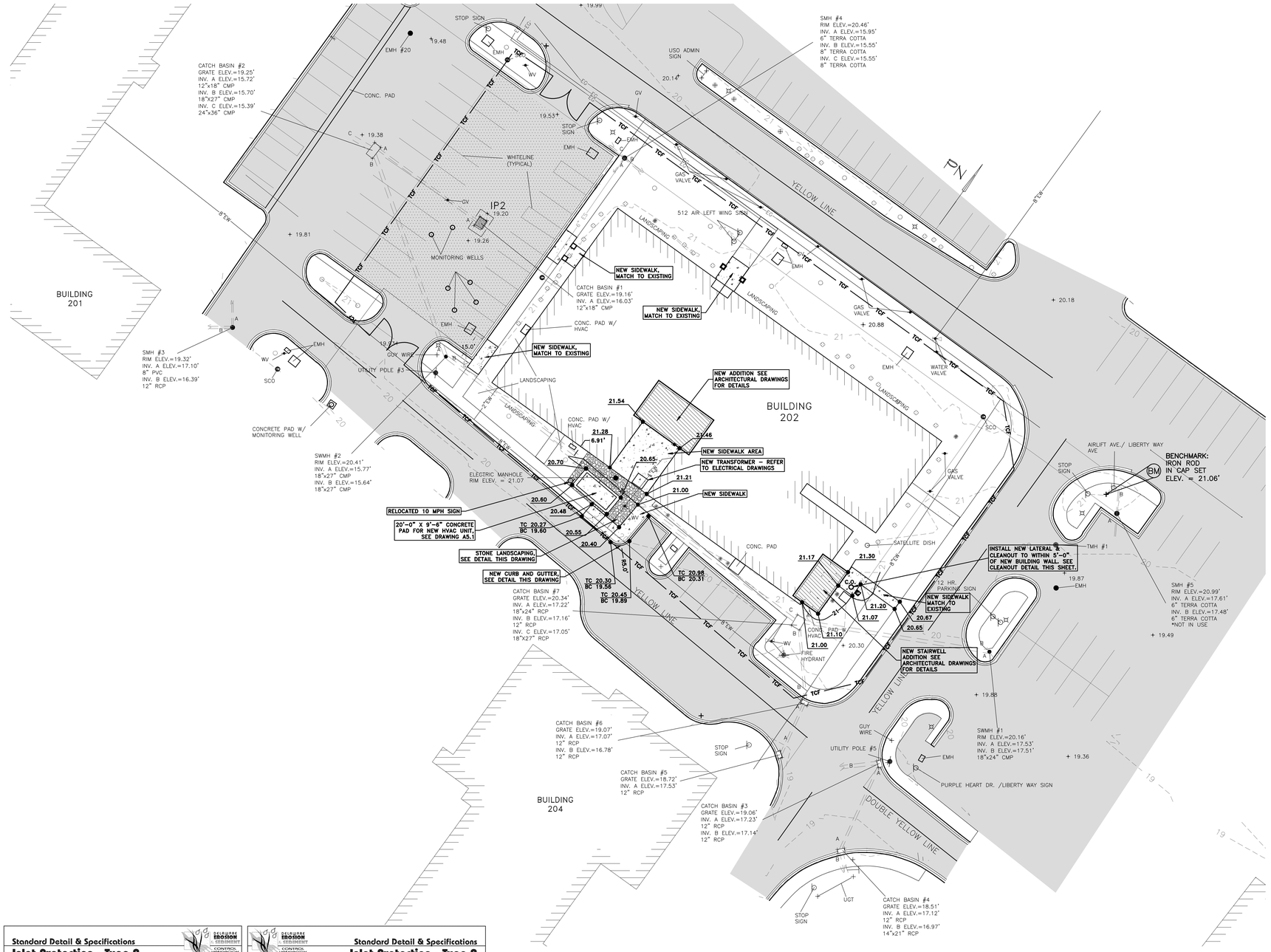

LEGEND

EXISTING:		NEW:
	DITCH, SWALE	
45.45	SPOT ELEVATION	21.46
45	CONTOUR	21
	ROAD, CURB	
	SIDEWALK	
24"SD	STORM DRAIN, CATCH BASIN, MANHOLE	
EG	GAS MAIN, VALVE	
8" ES	SEWER MAIN, MANHOLE	
	CLEANOUT	C.O.
6"EW	WATER MAIN, VALVE, HYDRANT	
PP	UTILITY POLE	
	LIGHTING	
	SIGN	
	BUILDING	
	PAVEMENT	
	REMOVAL ITEMS	
	STONE LANDSCAPING	
	TEMPORARY CONSTRUCTION FENCE	TCF TCF
	CONSTRUCTION STAGING AREA	

ABBREVIATIONS

EMH	ELECTRIC MANHOLE
SWMH	STORMWATER MANHOLE
SMH	SEWER MANHOLE
WV	WATER VALVE
EW	EXISTING WATER
TC	TOP OF CURB
BC	BOTTOM OF CURB
ELEV	ELEVATION
CONC	CONCRETE
RCP	REINFORCED CONCRETE PIPE
ES	EXISTING SEWER
GV	GAS VALVE
SCO	SEWER CLEAN OUT
EG	EXISTING GAS
GABC	GRADED AGGREGATE BASE COURSE
CMP	CORRUGATED METAL PIPE
MJ	MECHANICAL JOINT

NOTE:

1. CONTRACTOR SHALL TAKE CARE NOT TO DAMAGE PAVEMENT IN STAGING AREA.
2. CONTRACTOR SHALL REGRADE AND SOD ALL DISTURBED AREAS.

Standard Detail & Specifications

Inlet Protection - Type 2

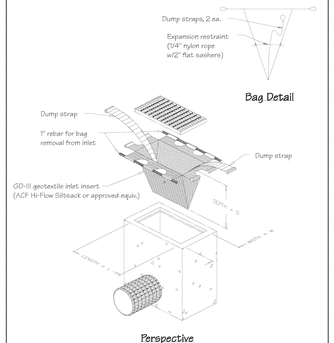

Source:	Symbol:	Detail No.
Adapted from ACF Products, Inc.	IP-2	DE-ESC-3.1.5.2 Sheet 1 of 2 Date: 12/03

Standard Detail & Specifications

Inlet Protection - Type 2

Notes:

1. This practice shall only be used in situations in which Inlet Protection - Type 1 cannot be used due to site constraints. These include, but are not limited to partially completed parking areas, streets, roads, etc.
2. It may be necessary to transition from Type 1 to Type 2 Inlet Protection as construction proceeds.
3. For areas where there is a concern for oil run-off or spills, insert shall meet one of the above specifications with an oil-absorbant pillow or shall be made completely from an oil-absorbant material with a woven pillow.

Materials:

The geotextile inlet insert shall meet or exceed the specifications of Type GD-III geotextile in accordance with Appendix A-3 of the Delaware Erosion & Sediment Control Handbook.

Source:	Symbol:	Detail No.
Adapted from ACF Products, Inc.	IP-2	DE-ESC-3.1.5.2 Sheet 2 of 2 Date: 12/03

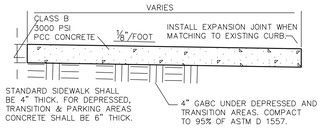

SIDEWALK DETAIL
NO SCALE

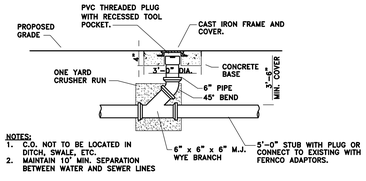

NOTES:
1. C.O. NOT TO BE LOCATED IN DITCH, SWALE, ETC.
2. MAINTAIN 10' MIN. SEPARATION BETWEEN WATER AND SEWER LINES

SEWER CLEANOUT DETAIL
NO SCALE

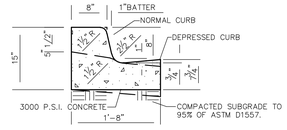

INTEGRAL P.C.C. CURB AND GUTTER TYPE 3
NO SCALE

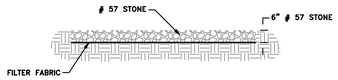

STONE LANDSCAPING
NO SCALE

0' 20' 40' 60'
SCALE: 1" = 20'

REV	DATE	DESCRIPTION	DRAWN	APPR'D
B	01JUL10	ISSUED FOR BID	SJL	CDS
A	11MAY10	ISSUED FOR REVIEW	SJL	CDS

AIR MOBILITY COMMAND

DOVER AIR FORCE BASE, DELAWARE

TITLE: REPAIR RESERVE HEADQUARTERS FACILITY 202

SUBMITTED	APPROVED	APPROVED
CHIEF ENGINEER	CHIEF ENGINEER	COMMANDER

DATE:	PROJECT #:	PLOT SCALE:	DRAWN BY:	DESIGNED BY:
4-30-10	049002	AS NOTED	DMH	M. WHEEDLEDON

SITE PLAN

W-4497

SHT 3 OF 57

C2.1

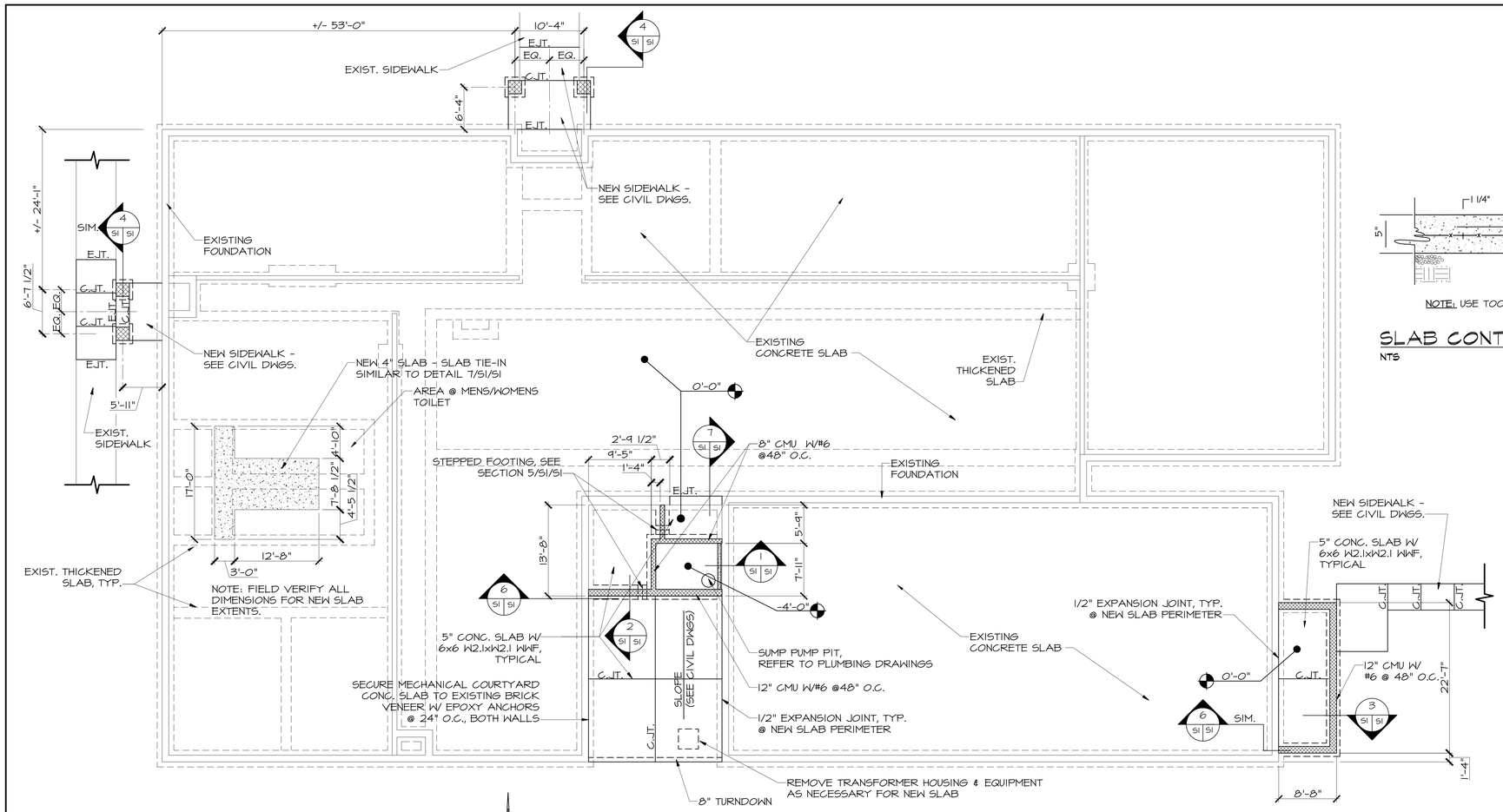

FOUNDATION PLAN
SCALE 1/8"=1'-0"

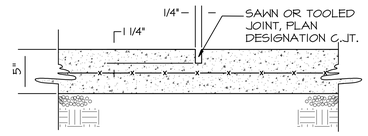

NOTE: USE TOOLED JOINT FOR SIDEWALKS

SLAB CONTROL JOINT DETAIL
NTS

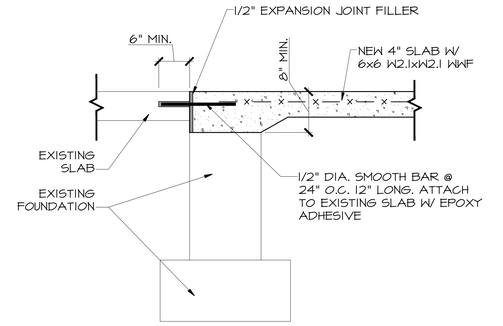

SECTION @ SLAB TIE IN (7 / S1 S1)
1"=1'-0"

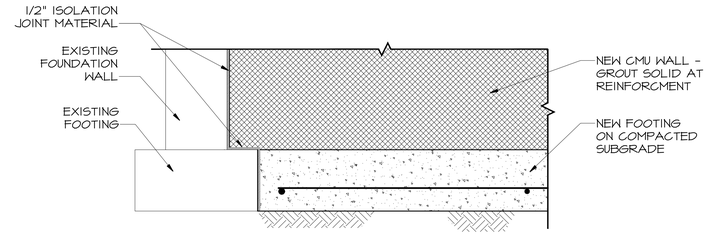

NOTE: CONTRACTOR TO MATCH EXISTING FOOTING DEPTH

TYPICAL SECTION @ FOOTING TIE IN (6 / S1 S1)
1"=1'-0"

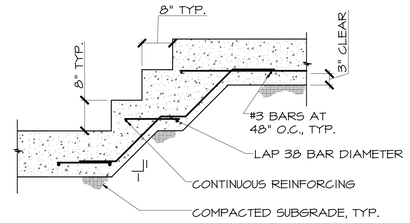

SECTION @ STEPPED FOOTING (5 / S1 S1)
N.T.S.

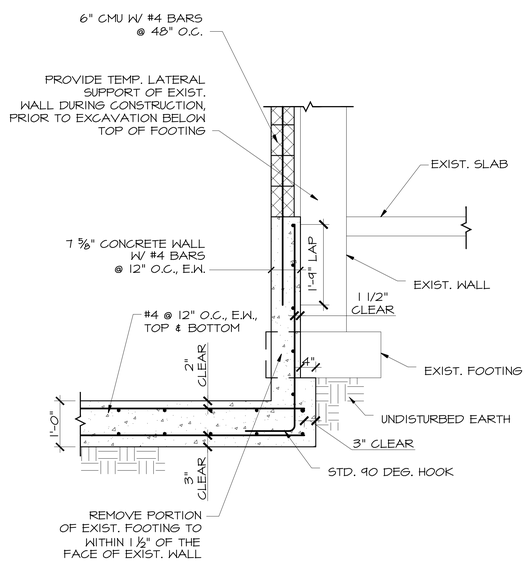

SECTION @ ELEVATOR SHAFT (1 / S1 S1)
3/4"=1'-0"

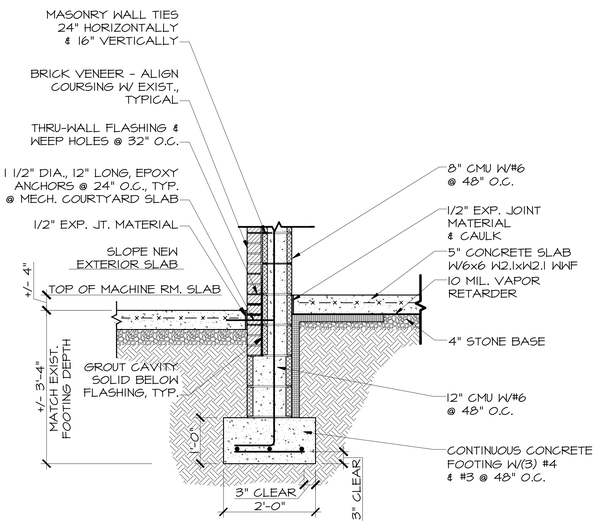

SECTION @ ELEVATOR/MACHINE ROOM FOUNDATION WALL (2 / S1 S1)
3/4"=1'-0"

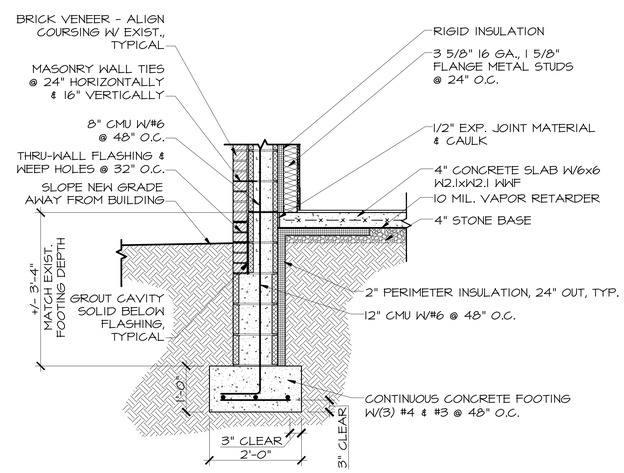

SECTION @ NEW STAIR FOUNDATION WALL (3 / A3.1 S1 S1)
3/4"=1'-0"

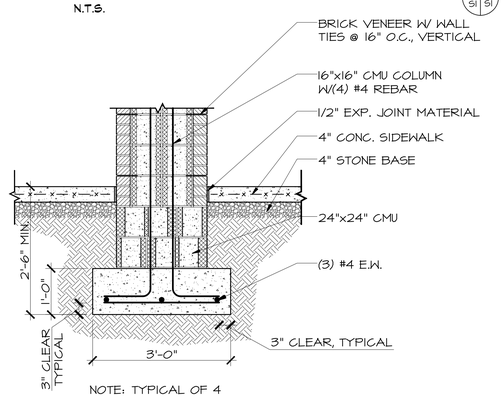

NOTE: TYPICAL OF 4

ENTRANCE COLUMN FOUNDATION DETAIL (4 / S1 S1)
3/4"=1'-0"

REV	DATE	DESCRIPTION	DRAWN	APPR'D
B	01JUL10	ISSUED FOR BID	SJL	CDS
A	11MAY10	ISSUED FOR REVIEW	SJL	CDS

AIR MOBILITY COMMAND
DOVER AIR FORCE BASE, DELAWARE

TITLE: REPAIR RESERVE HEADQUARTERS FACILITY 202

SUBMITTED	APPROVED	APPROVED
CHIEF ENGINEER	CHIEF ENGINEER	COMMANDER

DATE:	PROJECT #:	PLOT SCALE:	DRAWN BY:	DESIGNED BY:
4-30-10	049002	AS NOTED	M. BAUMAN	M. WHEEDLETON

FOUNDATION PLAN & DETAILS

W-4497

SHT 4 OF 57

S1

STRUCTURAL NOTES

1. Design Loads

Roof Dead Load	(Top Chord)	7 PSF
	(Bottom Chord)	10 PSF
Roof Live Load		30 PSF
Floor Dead Load		44 PSF
Floor Live Load		100 PSF
Snow	(Ground Snow Load)	25 PSF
	(Exposure Factor)	1.0
	(Thermal Factor)	1.0
	(Importance Factor)	1.0
Wind	(Basic Wind Speed)	100 MPH (3-second gust)
	(Importance Factor)	1.0
	(Exposure Category)	C
Seismic	(Spectral Response Accel., SS)	0.17g
	(Spectral Response Accel., S1)	0.05g
	(Seismic Importance factor, I)	1.0
	(Seismic Design Category)	B
	(Seismic Use Group)	II
	(Site Class)	D
	(Basic Structural System)	Bearing Wall Systems
	(Seismic Resisting System)	Shear Walls
	(Analysis Procedure)	Equiv. Lateral Force

2. General
The building, construction materials, structural components, fasteners, and connectors shall be in accordance with the International Building Code, 2006 edition, these plans and specifications, and all applicable State and local regulations. The Contractor shall coordinate the construction of all building trades and subcontractors plus all inspections and testing. The Contractor shall provide and coordinate all depressions, openings, pockets, recesses and sleeves for the installation of plumbing, mechanical, and electrical equipment. Do not cut or alter structural framing components without approval of the structural engineer.

3. Backfill and Compaction
On site materials used for structural fill shall be free of deleterious matter and classified as GW, GP, GM, SM, SW, and SP per ASTM D-2487. Prior to the placement of fill, the site shall be stripped of topsoil, debris, vegetation and organic materials. The exposed subgrade of any excavated area shall be compacted in place to a density of 95% of the Modified Proctor Maximum Dry Density.

Fill material shall be placed in 8" maximum loose lifts and compacted by mechanical equipment to a density of 95% of the Modified Proctor Maximum Dry Density. The contractor shall provide means of free drainage of the site and shall maintain necessary sediment controls. Placement of fill with a moisture content too high for proper compaction is not acceptable. Placement of fill in standing water or on frozen material is not acceptable.

4. Foundations
All spread footings have been designed for a soil bearing capacity of 2000 PSF. Soil bearing capacity shall be verified by a Geotechnical Engineer paid by the Contractor. If material of at least this capacity is not encountered at the elevations tested, the footing size shall be increased or foundation lowered as directed by the Engineer.

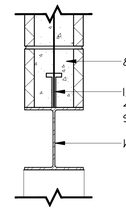

SECTION @ INTERIOR STEEL HEADER (1/S2.52)
SCALE: 1 1/2"=1'-0"

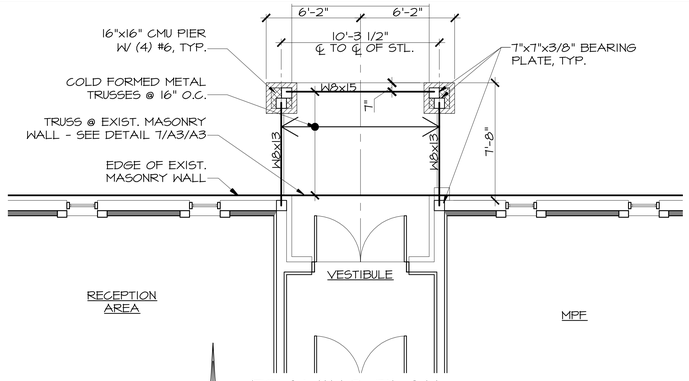

FRAMING PLAN @ NORTH ENTRANCE
SCALE: 1/4"=1'-0"

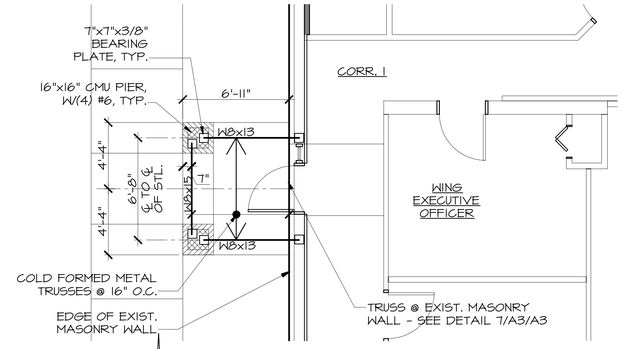

FRAMING PLAN @ WING COMMAND ENTRANCE
SCALE: 1/4"=1'-0"

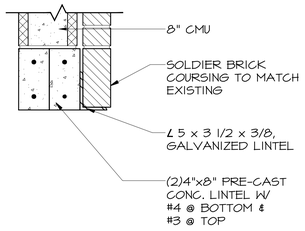

SECTION @ LINTEL "L1" (3/S2.52)
SCALE: 1 1/2"=1'-0"

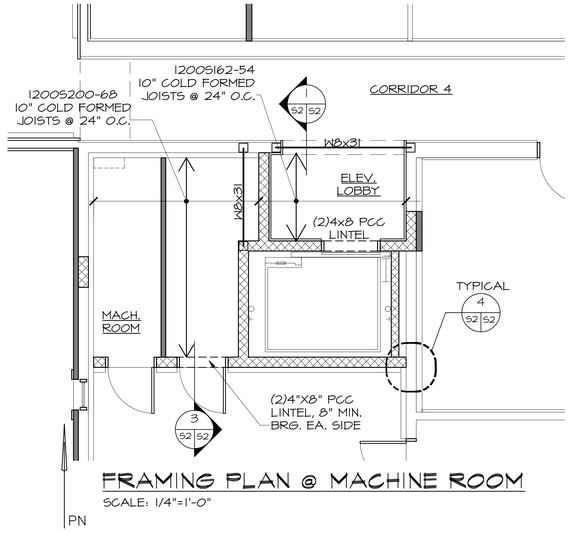

FRAMING PLAN @ MACHINE ROOM
SCALE: 1/4"=1'-0"

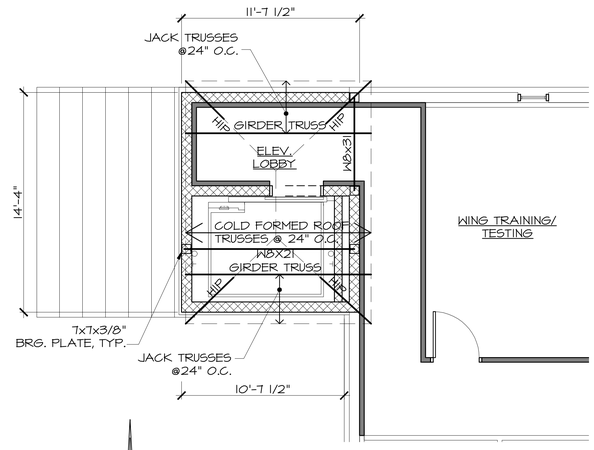

ROOF FRAMING PLAN @ ELEVATOR
SCALE: 1/4"=1'-0"

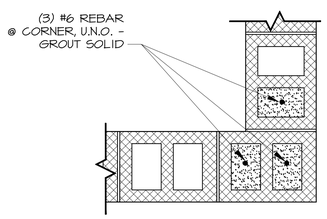

PLAN DETAIL @ TYPICAL CMU CORNER (4/S2.52)
SCALE: NTS

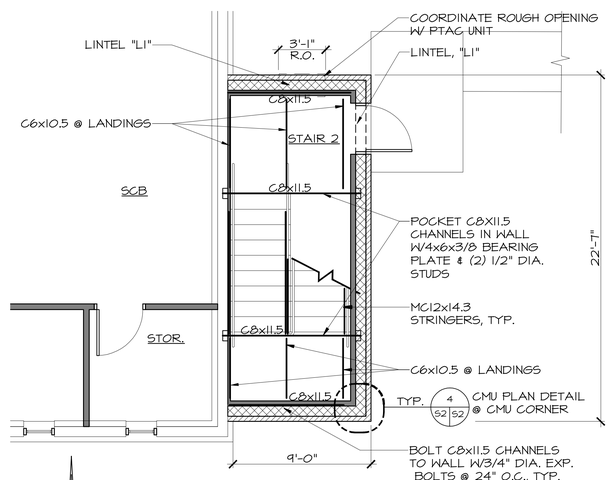

SECOND FLOOR STAIR FRAMING PLAN
SCALE: 1/4"=1'-0"

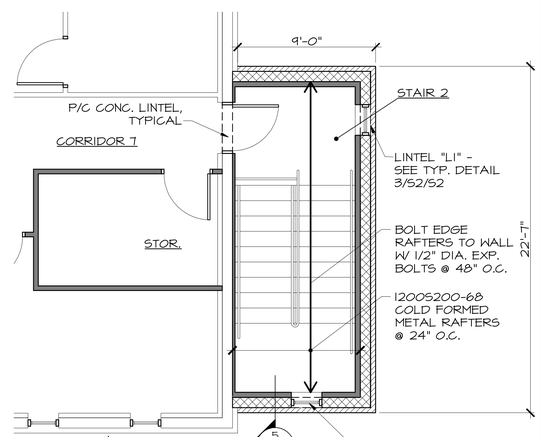

NOTE: REFER TO SHEET A3.1 FOR STAIR DETAILS

ROOF FRAMING PLAN @ STAIR
SCALE: 1/4"=1'-0"

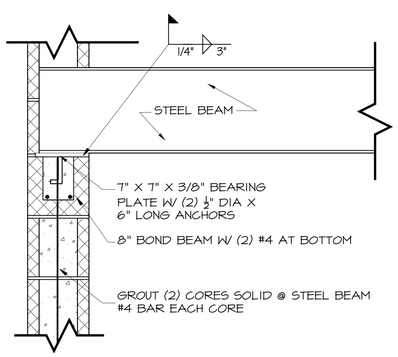

TYPICAL STEEL BEAM BEARING ON CMU
SCALE: 1 1/2"=1'-0"

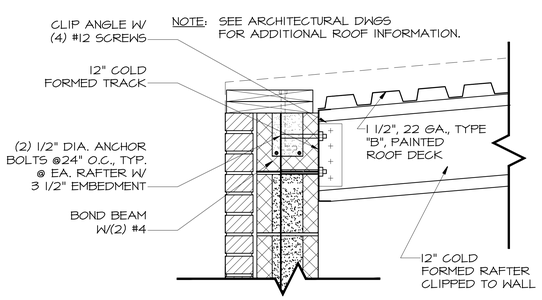

SECTION @ RAFTER BEARING (5/S2.52)
SCALE: 1 1/2"=1'-0"

REV	DATE	DESCRIPTION	DRAWN	APPR'D
B	01JUL10	ISSUED FOR BID	SJL	CDS
A	11MAY10	ISSUED FOR REVIEW	SJL	CDS

AIR MOBILITY COMMAND
DOVER AIR FORCE BASE, DELAWARE

TITLE: REPAIR RESERVE HEADQUARTERS FACILITY 202

SUBMITTED	APPROVED	APPROVED
CHIEF ENGINEER	CHIEF ENGINEER	COMMANDER

DATE:	PROJECT #:	PLOT SCALE:	DRAWN BY:	DESIGNED BY:
4-30-10	049002	AS NOTED	M. BAUMAN	M. WHEEDLETON

FRAMING PLANS & DETAILS

W-4497 | S2

SHT 5 OF 57

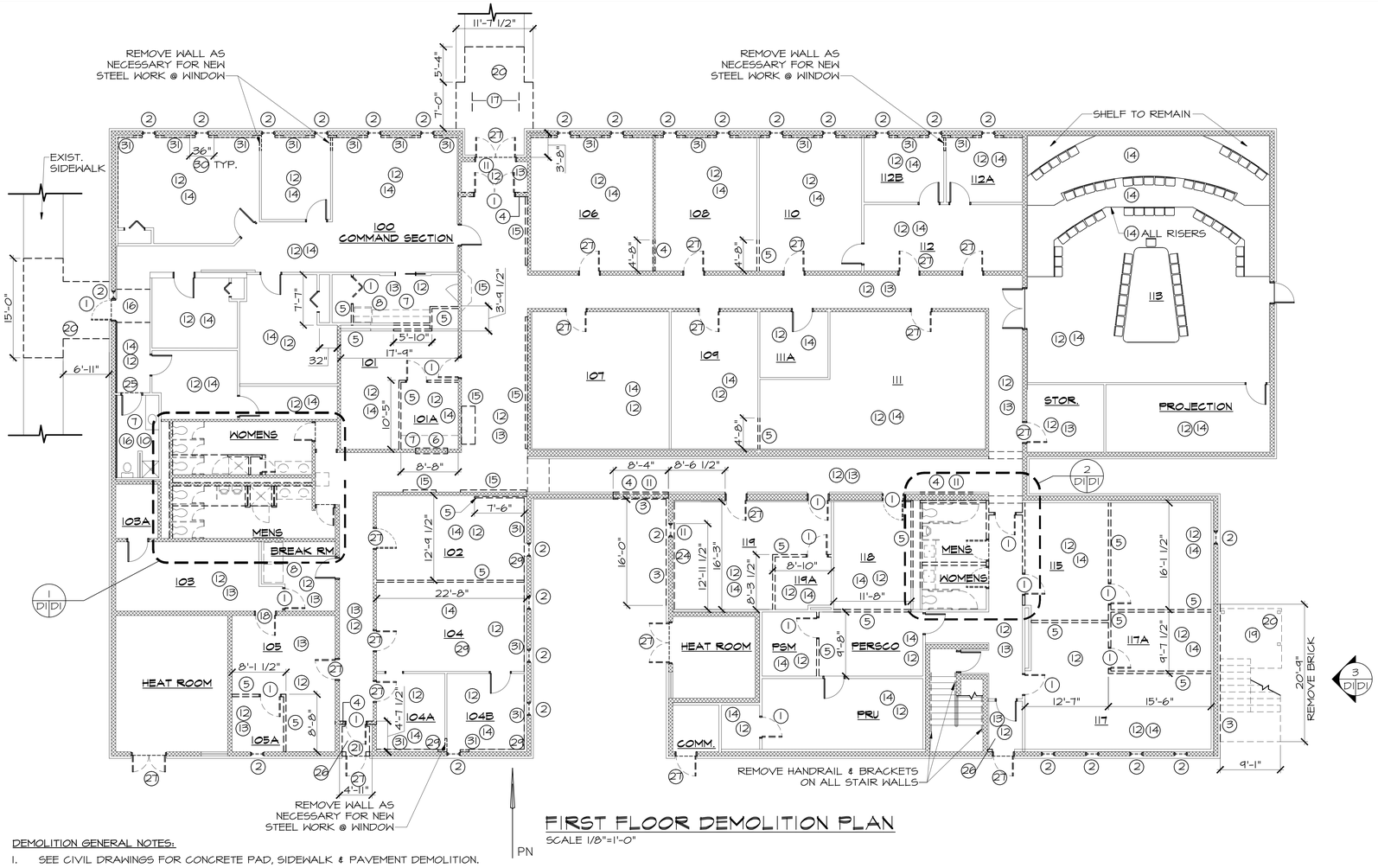

FIRST FLOOR DEMOLITION PLAN

SCALE 1/8"=1'-0"

DEMOLITION GENERAL NOTES:

1. SEE CIVIL DRAWINGS FOR CONCRETE PAD, SIDEWALK & PAVEMENT DEMOLITION.
2. SEE MEP DRAWINGS FOR ADDITIONAL DEMOLITION INFORMATION.
3. PREP ALL EXISTING GWB TO BE PAINTED.
4. PREP ALL EXISTING FLOORS TO RECEIVE NEW FINISH PER FINISH SCHEDULE.
5. REMOVE PAINT FINISH FROM ALL MTL DOOR FRAMES TO REMAIN. PREP FOR NEW PAINT.
6. ASBESTOS CONTAINING MATERIALS (ACM) WERE FOUND IN THE BLDG. REFER TO SPECIFICATION SECTION 02 82 16 "ENGINEERING CONTROL OF ASBESTOS CONTAINING MATERIALS" FOR ACM LOCATIONS & REMOVAL PROCEDURES.
7. LEAD BASED PAINT WAS FOUND ON EXTERIOR DOOR & WINDOW METAL LINTELS. REFER TO SPECIFICATION SECTION 02 82 33 "REMOVAL & DISPOSAL OF PAINT WITH LEAD" FOR ADDITIONAL INFORMATION.
8. CONTRACTOR IS REQUIRED TO WALK THE BUILDING WITH THE OWNER'S POC TO DETERMINE ITEMS TO BE SALVAGED.
9. REMOVE ALL DISPLAY CABINETS/CASES & STORE FOR RE-INSTALLATION.
10. ASBESTOS CONTAINING MATERIALS SHALL BE REMOVED BY A SEPARATE CONTRACTOR PRIOR TO START OF WORK ON THIS CONTRACT. SEE SHEET A1 FOR LOCATION PLAN.

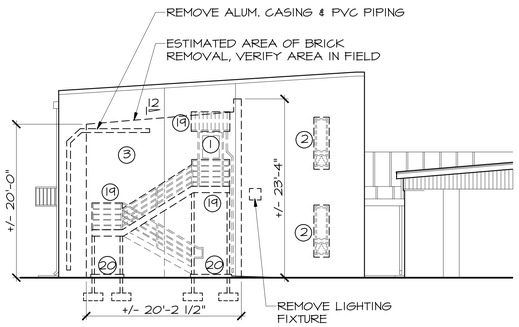

PARTIAL DEMOLITION ELEVATION - EAST SIDE STAIR

SCALE 1/8"=1'-0"

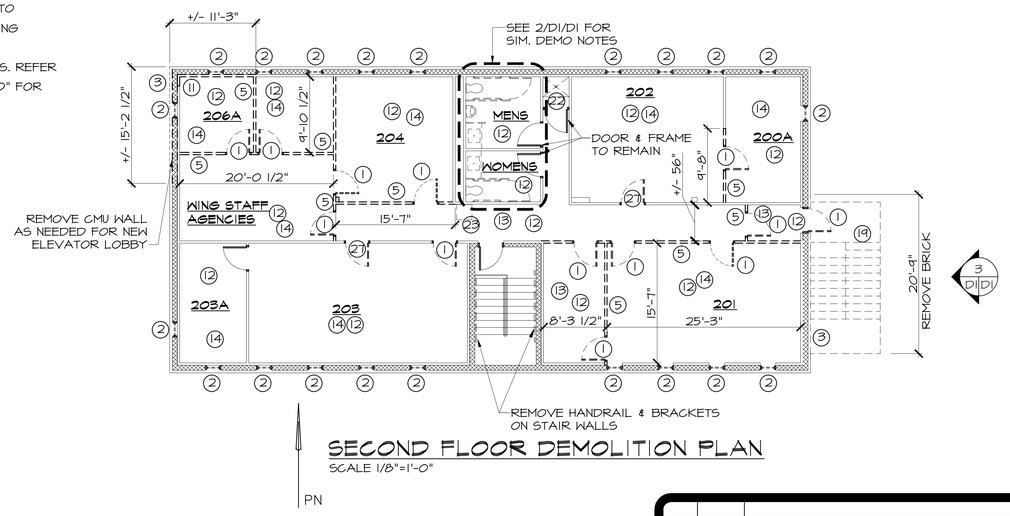

SECOND FLOOR DEMOLITION PLAN

SCALE 1/8"=1'-0"

DRAWING NOTES:

1. REMOVE DOOR, FRAME, TRIM & ASSOCIATED HARDWARE.
2. REMOVE WINDOW UNITS, ASSOCIATED HARDWARE, TRIM, INTERIOR SILL & JAMB. PRE-CAST SILL TO REMAIN.
3. REMOVE BRICK VENEER, ASSOCIATED WALL TIES, REINFORCEMENT & OTHER MATERIALS ATTACHED TO CMU AS INDICATED.
4. REMOVE CMU WALL AS INDICATED TO BELOW SLAB.
5. REMOVE METAL STUD WALL FRAMING AND FINISHES.
6. REMOVE MAILBOX UNITS
7. REMOVE COUNTERTOP AND/OR CABINETS
8. REMOVE APPLIANCES AND/OR VENDING, SAVE FOR RELOCATION.
9. REMOVE TOILET PARTITIONS, DOORS AND ALL TOILET ACCESSORIES.
10. REMOVE PLUMBING FIXTURES AND ALL WALL MOUNTED ACCESSORIES. CAP PLUMBING LINES UNDER SLAB OR BEHIND WALL AS NECESSARY.
11. REMOVE FURRING/METAL STUDS & GWB.
12. REMOVE CEILING TILES AND SUSPENDED CEILING SYSTEM.
13. REMOVE VCT FLOORING, VINYL WALL BASE & ADHESIVES.
14. REMOVE CARPET, WALL BASE & ADHESIVES.
15. REMOVE PICTURE DISPLAY WALL AND/OR DISPLAY CASE - SAVE FOR RELOCATION.
16. REMOVE CERAMIC FLOOR AND WALL TILE & ASSOCIATED GROUT & MORTAR BED.
17. REMOVE ALUM. RAILING SYSTEM & FOUNDATION AS NECESSARY FOR NEW CONSTRUCTION.
18. REMOVE DOOR, FRAME, TRIM & HARDWARE. SAVE DOOR & HARDWARE FOR RELOCATION TO SERVER 142.
19. REMOVE FIRE ESCAPE STAIRS, STRUCTURE, CANOPY & DOWNSPOUT.
20. REMOVE CONC. SLAB AND FOUNDATION AS NECESSARY FOR NEW CONSTRUCTION.
21. REMOVE BRICK VENEER, VCT, ACOUSTICAL CEILING IN THIS AREA.
22. REMOVE MOP SINK, FLOOR DRAIN TO REMAIN.
23. REMOVE DRINKING FOUNTAIN, CAP SUPPLY LINES AS NEEDED.
24. REMOVE PORTION OF EXISTING FOOTING AND REMOVE BRICK VENEER & ASSOCIATED REINFORCEMENT. SEE DETAIL 1/S1/S1 FOR ADDITIONAL INFORMATION.
25. REMOVE MARBLE THRESHOLD.
26. REMOVE FLOOR MATS (FULL LENGTH & WIDTH OF VESTIBULE).
27. REMOVE DOOR & HARDWARE, FRAME TO REMAIN.
28. REMOVE SLAB & REINFORCEMENT AS SHOWN.
29. REMOVE FABRIC & ADHESIVES FROM ALL WALLS.
30. REMOVE RIGID INSULATION, GWB & FURRING AS NECESSARY @ HEAD, SILL & JAMBS FOR NEW STEEL WORK, TYPICAL @ ALL ONE STORY BUILDING WINDOWS.
31. REMOVE GWB, (CHAIR RAIL IN COMMAND AREA) & OTHER FINISHES ON EXTERIOR WALLS. RIGID INSULATION & FURRING TO REMAIN.

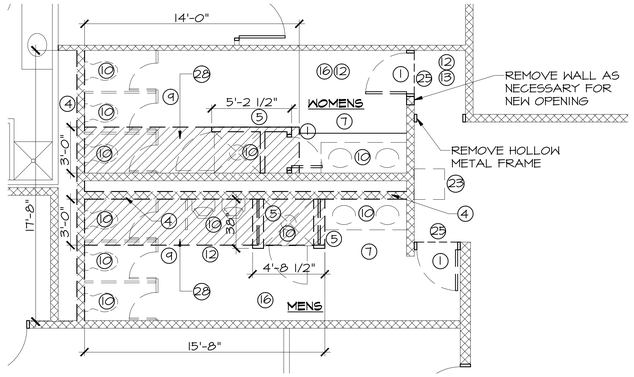

ENLARGED DEMOLITION PLAN @ 1ST FL. TOILETS

SCALE 1/4"=1'-0"

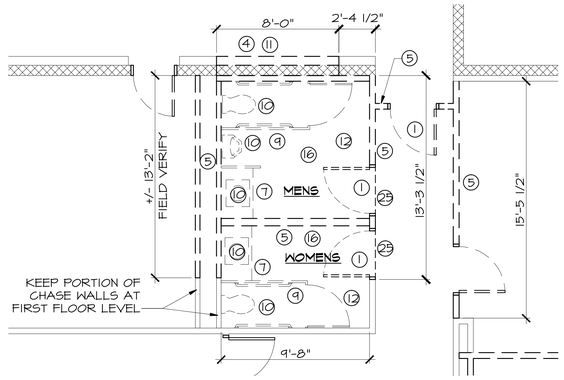

ENLARGED DEMOLITION PLAN @ 1ST FL. TOILETS

SCALE 1/4"=1'-0"

NOTE: SIMILAR DEMOLITION @ 2ND FL. TOILETS

REV	DATE	DESCRIPTION	DRAWN	APPR'D
B	01JUL10	ISSUED FOR BID	SJL	CDS
A	11MAY10	ISSUED FOR REVIEW	SJL	CDS

AIR MOBILITY COMMAND
DOVER AIR FORCE BASE, DELAWARE

TITLE: REPAIR RESERVE HEADQUARTERS FACILITY 202

SUBMITTED	APPROVED	APPROVED
CHIEF ENGINEER	CHIEF ENGINEER	COMMANDER

DATE:	PROJECT #:	PLOT SCALE:	DRAWN BY:	DESIGNED BY:
4-30-10	049002	AS NOTED	M. BAUMAN	M. WHEEDLETON

DEMOLITION PLANS

W-4497 | SHT 6 OF 57 | D1

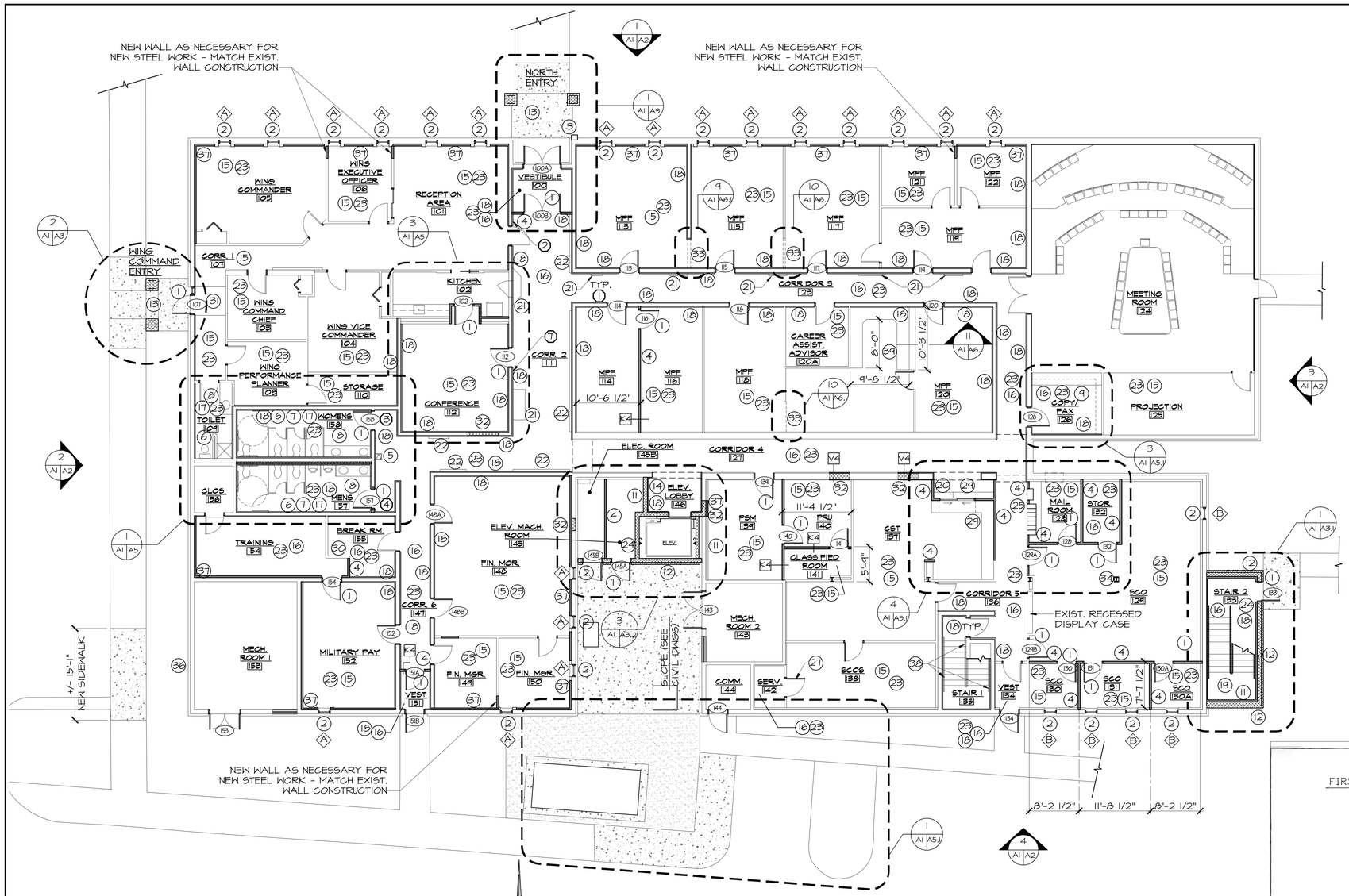

FIRST FLOOR PLAN

SCALE 1/8"=1'-0"

GENERAL NOTES:

1. REPAIR ANY GWB DAMAGED DURING CONSTRUCTION & PREP ALL GWB FOR NEW PAINT.
2. INTERIOR DIMENSIONS NOTED ARE FROM FINISH TO FINISH, U.N.O.
3. NEW WALLS SHALL BE TYPE K1, U.N.O.
4. ALL NEW FRAMING ON EXTERIOR WALLS SHALL HAVE R-11 BATT INSULATION, U.N.O.
5. INSTALL 7/8" METAL HAT CHANNEL & 5/8" GWB ON ALL EXPOSED INTERIOR CMU WALLS W/ EXCEPTION TO MECHANICAL SPACES.

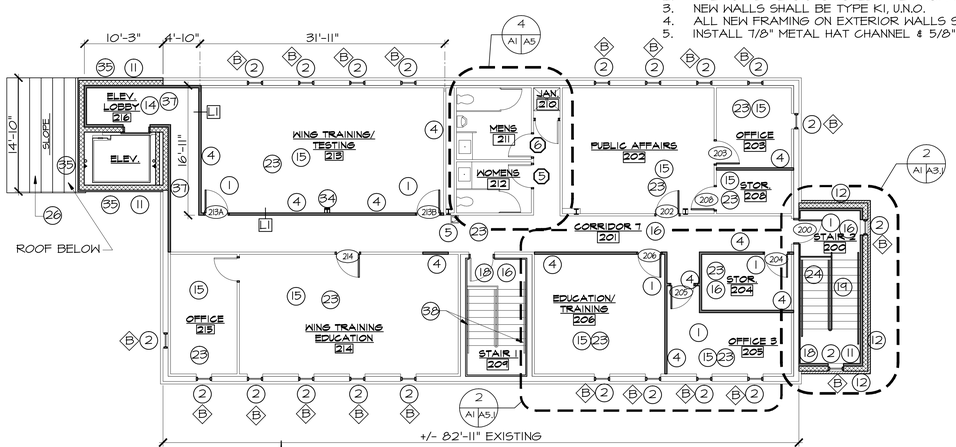

SECOND FLOOR PLAN

SCALE 1/8"=1'-0"

DRAWING NOTES:

1. INSTALL NEW DOOR, FRAME AND HARDWARE.
2. INSTALL NEW WINDOW UNIT- SEE DETAILS ON SHEET A6.1 FOR ADDITIONAL INFORMATION.
3. INSTALL NEW KNOX BOX, OWNER TO APPROVE EXACT LOCATION.
4. INSTALL COLD FORMED METAL STUD WALL FRAMING W/GWB, PAINTED (FLOOR TO 6 INCHES ABOVE SAT, U.N.O.).
5. INSTALL NEW ADA COMPLIANT WATER COOLER, SEE MEP DRAWINGS.
6. INSTALL NEW PLUMBING FIXTURES, SEE MEP DRAWINGS.
7. INSTALL NEW SOLID PLASTIC TOILET PARTITION, DOOR AND S.S. GRAB BARS AS SHOWN ON ENLARGED PLAN.
8. INSTALL NEW SOLID SURFACE COUNTERS.
9. 24" COUNTER W/ O.H. CABINETS & BASE CABINETS BELOW.
10. EXISTING REFRIGERATOR RELOCATED.
11. INSTALL NEW CMU WALL, SEE STRUCTURAL DRAWINGS FOR REINFORCEMENT INFORMATION.
12. NEW BRICK VENEER, MATCH EXISTING COLOR. PROVIDE MOCK-UP FOR OWNER APPROVAL.
13. NEW ENTRY AREA, SEE PLANS, DETAILS & ELEVATIONS ON SHEET A3.
14. NEW ELEVATOR AND ELEVATOR LOBBY, SEE ENLARGED PLANS ON SHEET A3.2.
15. PREP FLOOR AND INSTALL CARPET AND WALL BASE AS INDICATED ON DRAWINGS.
16. PREP FLOOR AND INSTALL NEW VCT AND VINYL WALL BASE.
17. INSTALL CERAMIC FLOOR, WALL & BASE TILE, SEE INTERIOR ELEVATIONS.
18. INSTALL METAL FURRING & 5/8" GWB FROM FLOOR TO 6 INCHES ABOVE SAT.
19. NEW METAL PAN STAIR AND LANDING W/ 1 1/2" DIA. ALUM. RAILING SYSTEM.
20. INSTALL SLIDING RECEPTION STYLE WINDOW UNIT W/SHOWCASE LOCK.
21. EXISTING DISPLAY CASE RE-INSTALLED.
22. EXISTING DISPLAY WALL RE-INSTALLED.
23. INSTALL NEW ACOUSTICAL CEILING TILE AND SUSPENDED CLG. SYSTEM, SEE SHEET A1.1 FOR REFLECTED CLG. PLAN.
24. INSTALL COLD FORMED CEILING JOISTS AND GWB CEILING.
25. INSTALL NEW MAILBOX UNITS IN WALL, SEE INTERIOR ELEVATIONS ON SHEET A5.1.
26. NEW METAL ROOF & FASCIA, ALUMINUM GUTTERS AND DOWNSPOUT.
27. INSTALL NEW HM FRAME & RELOCATED DOOR & HARDWARE. RECONSTRUCT OPENING SIZE AS NECESSARY TO ACCOMMODATE NEW FRAME & RELOCATED DOOR.
28. INSTALL NEW MOP SINK W/CONTROLS @ 42" A.F.F AND DRAIN BODY @ EXISTING LINE.
29. NEW SERVICE AND/OR WORK COUNTER, SEE ENLARGED PLAN NOTED.
30. EXISTING VENDING MACHINES RELOCATED.
31. NEW CERAMIC FLOOR TILE AREA @ DOOR ENTRANCE, SEE ENLARGED PLAN NOTED.
32. INFILL OPENING W/ CMU, FIELD VERIFY DIMENSIONS. SEE DETAIL 3/A1/A4.
33. NEW 48"x80" WOOD CASED OPENING. SEE DETAIL NOTED
34. INSTALL COLD FORMED METAL FRAMING & 5/8" GWB AROUND EXISTING COLUMN. SEE DETAIL 9/A1/A6.
35. INSTALL NEW EIFS SYSTEM AT EXTERIOR MASONRY WALL. SEE EXTERIOR ELEVATIONS ON SHEET A2.
36. REPAIR OR REPLACE BRICK @ EXISTING CHILLER PIPE DEMO, MATCH EXISTING.
37. INSTALL 3 5/8" COLD FORMED METAL STUDS @ 24" O.C. W/R-15 BATT INSULATION. REPLACE RIGID INSULATION BOARDS AND/OR FURRING DAMAGED DURING DEMOLITION OR IN POOR CONDITION.
38. INSTALL NEW HANDRAIL & BRACKETS - SEE DETAIL 8/A1.1/A3.1
39. INSTALL 24" COUNTER & SUPPORTS, 12" TRANSACTION TOP, 42" HIGH WOOD DIVIDER & DOOR. SEE DETAIL NOTED.

B	01JUL10	ISSUED FOR BID	SJL	CDS
A	11MAY10	ISSUED FOR REVIEW	SJL	CDS
REV	DATE	DESCRIPTION	DRAWN	APPR'D

BATTA ENVIRONMENTAL ASSOCIATES, INC.
Industrial Hygiene Geo-Environmental Environmental Engineering
Delaware Industrial Park – 6 Garfield Way
Newark, Delaware 19713-5817 (302) 737-3376

	BY	DATE
DRAWN	SCW	1/15/08
CHECKED	MWS	1/15/08
PROJECT #	517704B	

SCALE: X | AC FILE: BLDG202 | DWG. NO. 3360 | REV. 1

DOVER AIR FORCE BASE
BUILDING 202
DOVER, DELAWARE
ACM LOCATIONS

AIR MOBILITY COMMAND

DOVER AIR FORCE BASE, DELAWARE

TITLE: REPAIR RESERVE HEADQUARTERS FACILITY 202

SUBMITTED	APPROVED	APPROVED
CHIEF ENGINEER	CHIEF ENGINEER	COMMANDER

DATE:	PROJECT #:	PLOT SCALE:	DRAWN BY:	DESIGNED BY:
4-30-10	049002	AS NOTED	M. BAUMAN	M. WHEEDLETON

FIRST FLOOR & SECOND FLOOR PLANS

W-4497

SHT 7 OF 57

A1

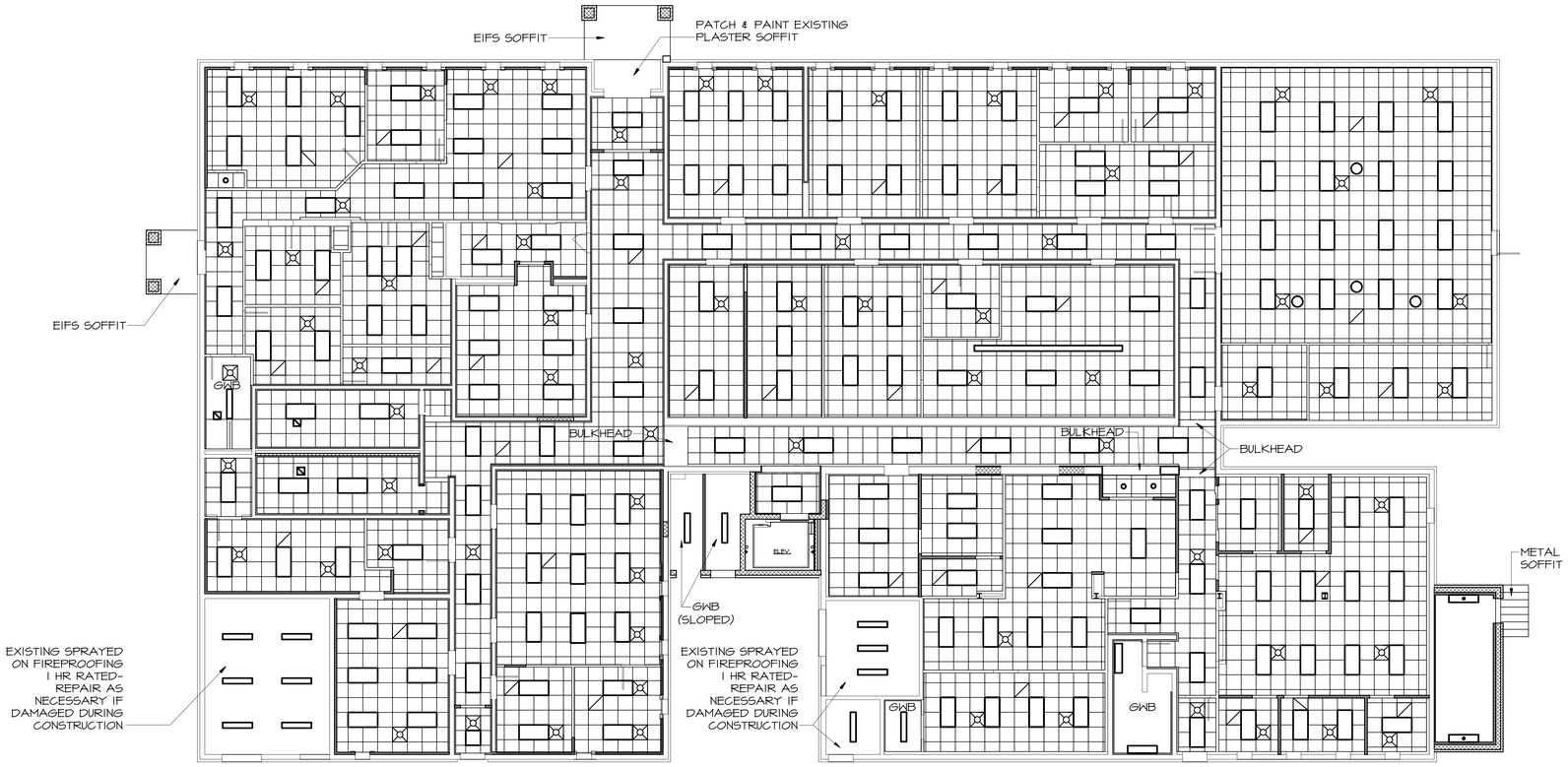

LEGEND

- 2'x2' RETURN AIR
- 2'x2' SUPPLY AIR
- SURFACE MOUNTED FLUORESCENT LIGHTING FIXTURE (SEE ELEC. DWGS)
- 2'x4' LIGHTING FIXTURE
- 2'x2' SAT

GENERAL NOTES:

1. SEE FINISH SCHEDULE FOR FINISHES REQUIRED AT EXISTING AREAS.
2. SEE FINISH SCHEDULE FOR CEILING HEIGHTS.
3. ALL WORK SHALL BE COORDINATED WITH ELECTRICAL AND MECHANICAL.

PN

FIRST FLOOR REFLECTED CEILING PLAN

SCALE 1/8"=1'-0"

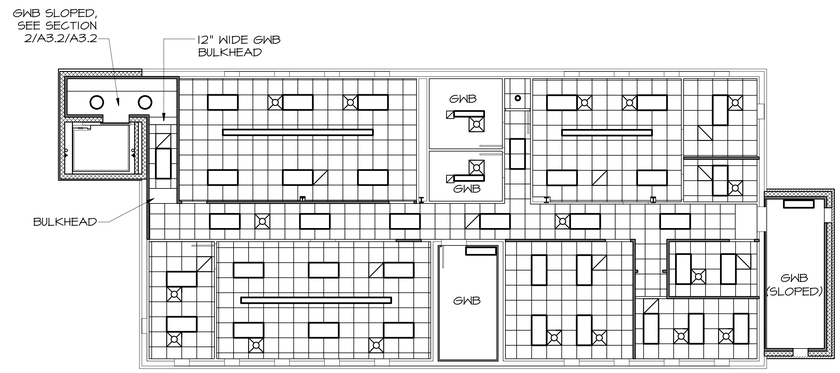

PN

SECOND FLOOR REFLECTED CEILING PLAN

SCALE 1/8"=1'-0"

REV	DATE	DESCRIPTION	DRAWN	APPR'D
B	01JUL10	ISSUED FOR BID	SJL	CDS
A	11MAY10	ISSUED FOR REVIEW	SJL	CDS

AIR MOBILITY COMMAND
DOVER AIR FORCE BASE, DELAWARE

TITLE: REPAIR RESERVE HEADQUARTERS FACILITY 202

SUBMITTED: CHIEF ENGINEER | APPROVED: CHIEF ENGINEER | APPROVED: COMMANDER

DATE: 4-30-10 | PROJECT #: 049002 | PLOT SCALE: AS NOTED | DRAWN BY: M. BAUMAN | DESIGNED BY: M. WHEEDLETON

FIRST & SECOND FLOOR REFLECTED CLG. PLANS

W-4497

SHT 8 OF 57

A1.1

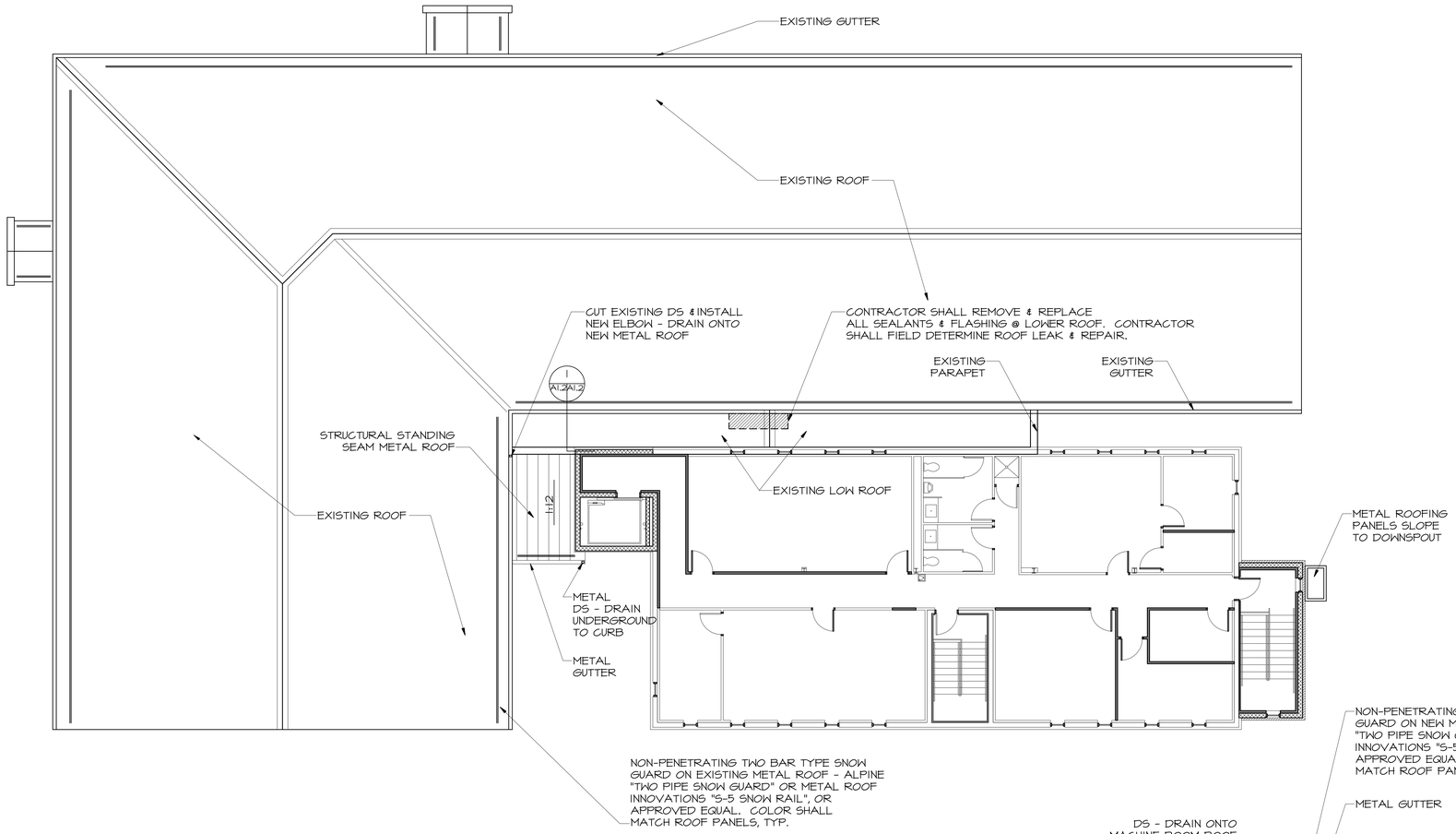

PN

FIRST FLOOR ROOF PLAN

SCALE 1/8"=1'-0"

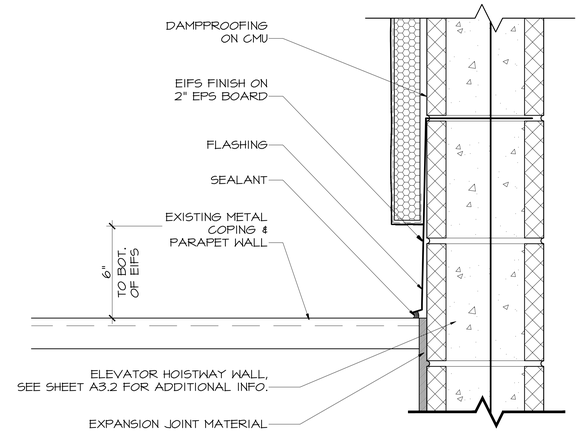

DETAIL @ NEW CMU & EXIST. PARAPET

SCALE: 3"=1'-0"

1 A1.2 A1.2

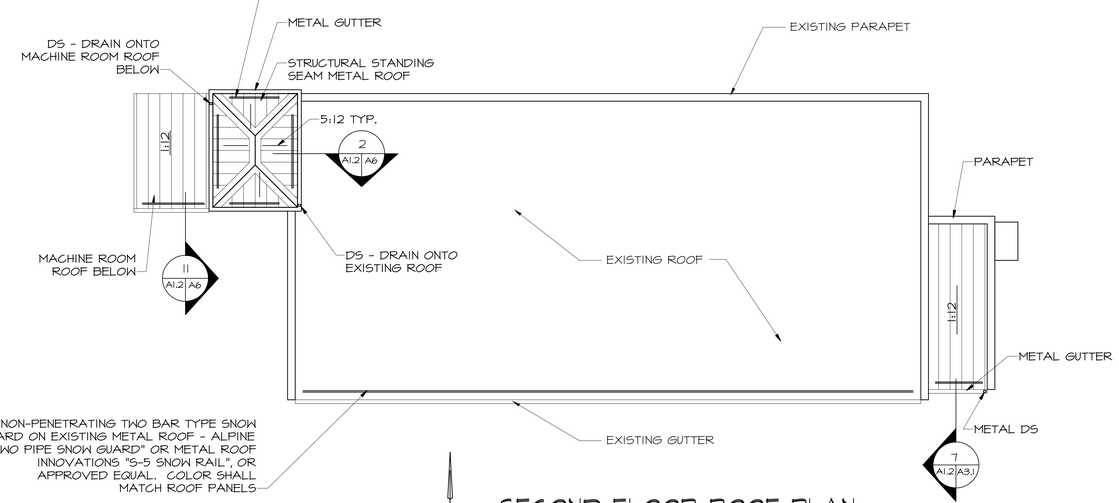

PN

SECOND FLOOR ROOF PLAN

SCALE 1/8"=1'-0"

REV	DATE	DESCRIPTION	DRAWN	APPR'D
B	01JUL10	ISSUED FOR BID	SJL	CDS
A	11MAY10	ISSUED FOR REVIEW	SJL	CDS

AIR MOBILITY COMMAND
DOVER AIR FORCE BASE, DELAWARE

TITLE: REPAIR RESERVE HEADQUARTERS FACILITY 202

SUBMITTED	APPROVED	APPROVED
CHIEF ENGINEER	CHIEF ENGINEER	COMMANDER

DATE:	PROJECT #:	PLOT SCALE:	DRAWN BY:	DESIGNED BY:
4-30-10	049002	AS NOTED	M. BAUMAN	M. WHEEDLETON

ROOF PLANS

W-4497

SHT 9 OF 57

A1.2

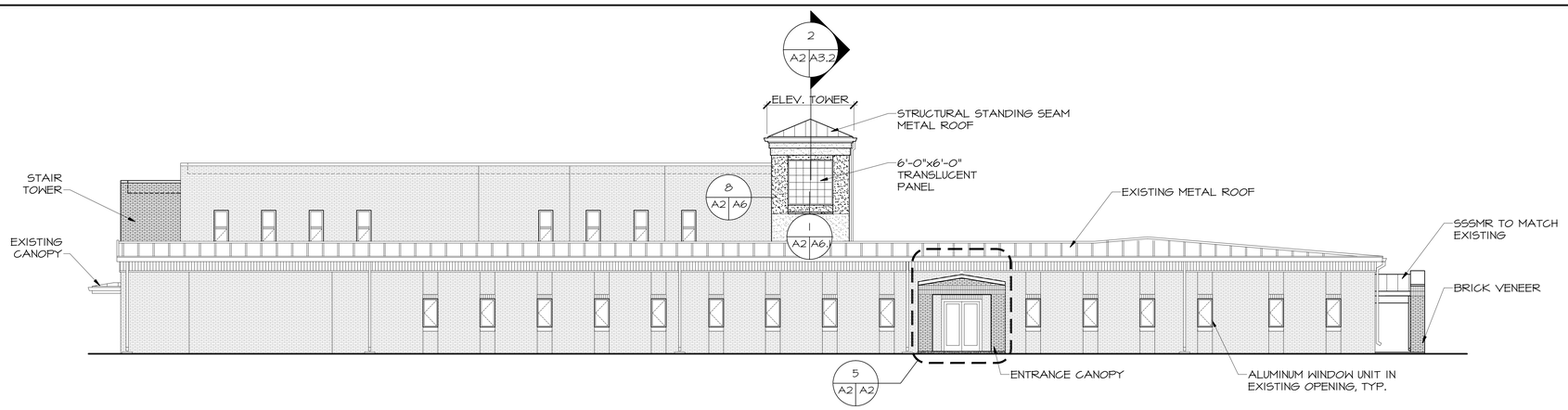

NORTH ELEVATION (1 | A1 A2)

SCALE: 1/8"=1'-0"

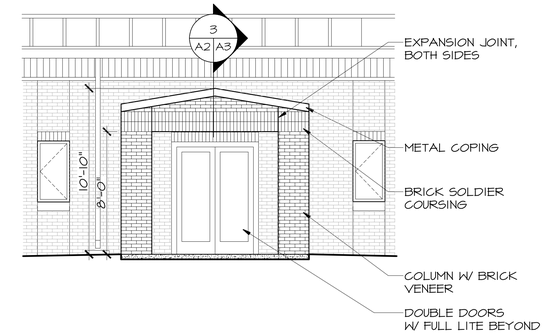

ENLARGED ELEVATION @ NEW NORTH SIDE ENTRANCE CANOPY (5 | A2 A2)

SCALE: 1/4" = 1'0"

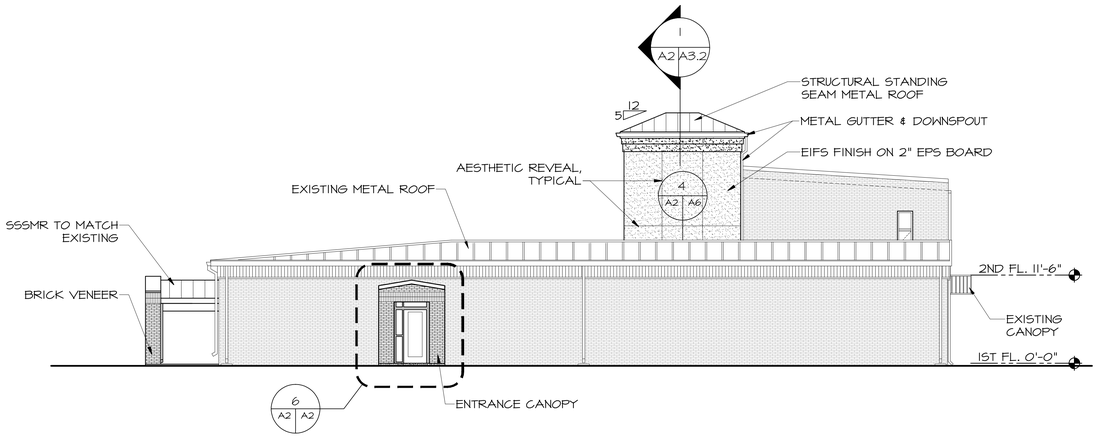

WEST ELEVATION (2 | A1 A2)

SCALE: 1/8"=1'-0"

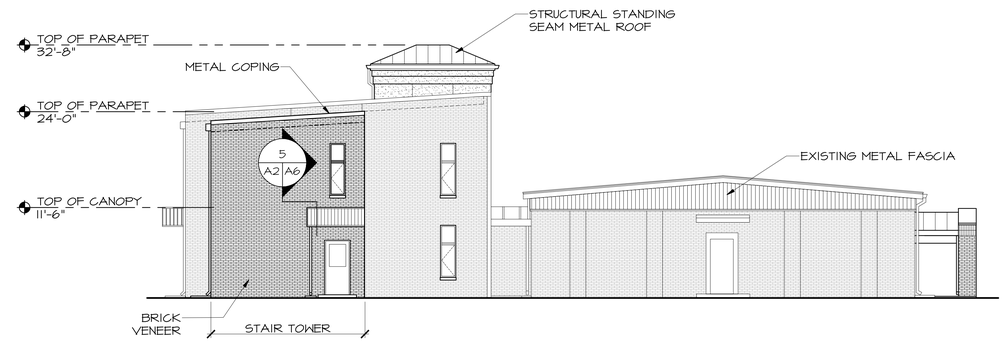

EAST ELEVATION (3 | A1 A2)

SCALE: 1/8"=1'-0"

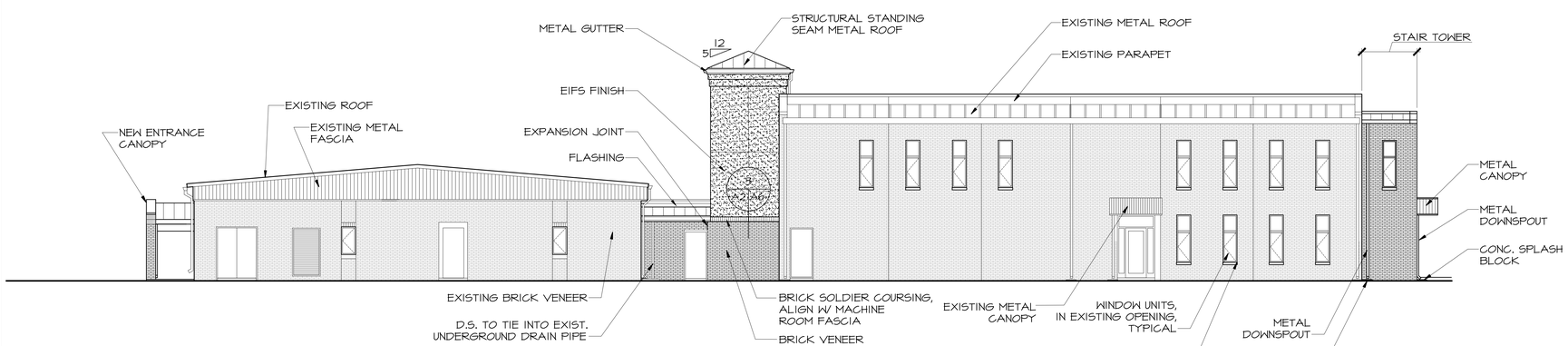

SOUTH ELEVATION (4 | A1 A2)

SCALE: 1/8"=1'-0"

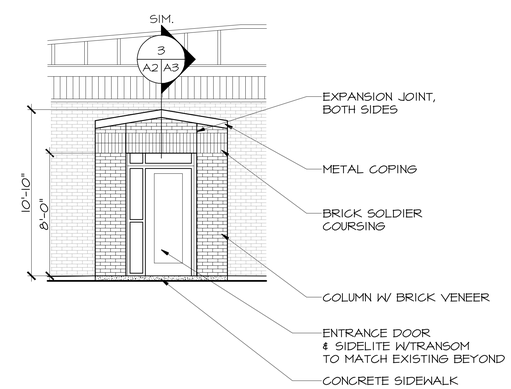

ENLARGED ELEVATION @ WING COMMAND ENTRANCE (6 | A2 A2)

SCALE: 1/4" = 1'0"

REV	DATE	DESCRIPTION	DRAWN	APPR'D
B	01JUL10	ISSUED FOR BID	SJL	CDS
A	11MAY10	ISSUED FOR REVIEW	SJL	CDS

AIR MOBILITY COMMAND
DOVER AIR FORCE BASE, DELAWARE

TITLE: REPAIR RESERVE HEADQUARTERS FACILITY 202

SUBMITTED	APPROVED	APPROVED
CHIEF ENGINEER	CHIEF ENGINEER	COMMANDER

DATE:	PROJECT #:	PLOT SCALE:	DRAWN BY:	DESIGNED BY:
4-30-10	049002	AS NOTED	M. BAUMAN	M. WHEEDLETON

EXTERIOR ELEVATIONS

W-4497

SHT 10 OF 57

A2

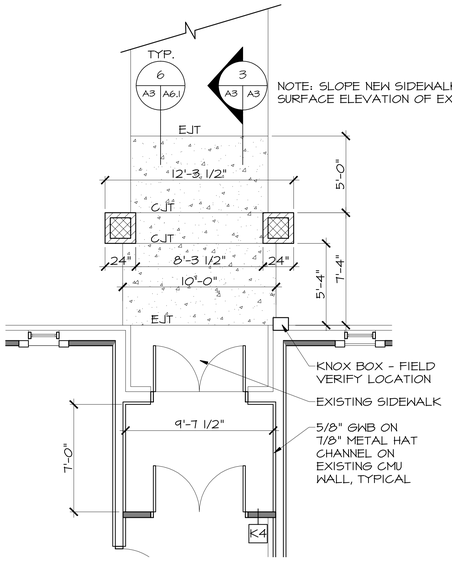

ENLARGED PLAN @ NORTH SIDE ENTRANCE (1 / A1 A3)

SCALE: 1/4"=1'-0"

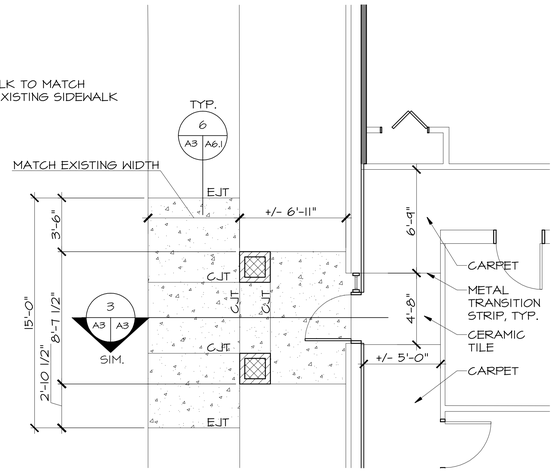

NOTE: SLOPE NEW SIDEWALK TO MATCH SURFACE ELEVATION OF EXISTING SIDEWALK

ENLARGED PLAN @ WING COMMAND ENTRANCE (2 / A1 A3)

SCALE: 1/4"=1'-0"

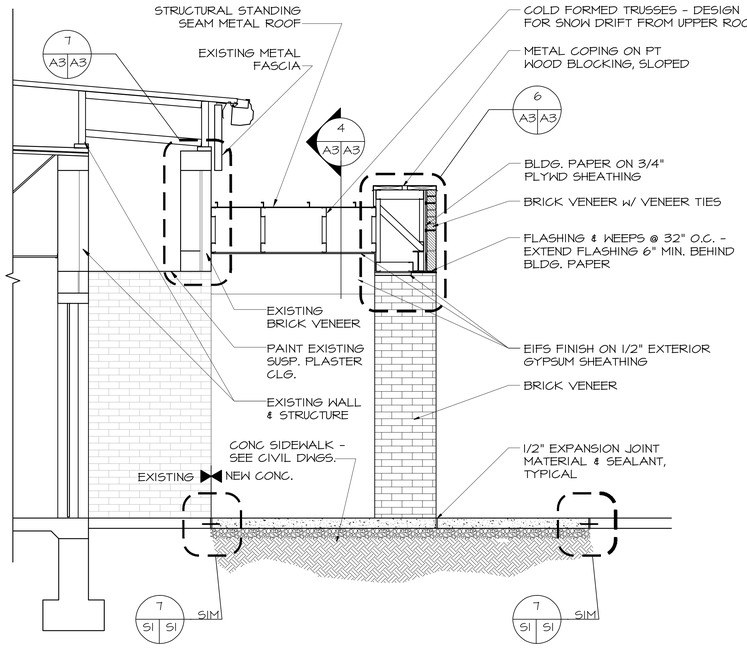

NOTES.
1. SLOPE NEW SIDEWALK TO MATCH SURFACE ELEVATION OF EXISTING SIDEWALK.
2. SECTION @ WEST CANOPY SIMILAR.

SECTION @ NORTH ENTRANCE CANOPY (3 / A3 A2 A3)

SCALE: 1/2"=1'-0"

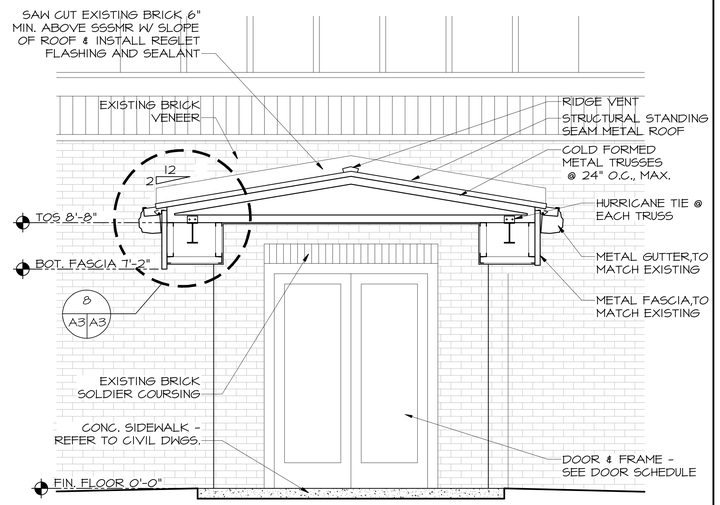

NOTES.
1. SLOPE NEW SIDEWALK TO MATCH SURFACE ELEVATION OF EXISTING SIDEWALK.
2. SECTION @ WEST CANOPY SIMILAR.

SECTION @ NORTH ENTRANCE CANOPY (4 / A3 A2 A3)

SCALE: 1/2"=1'-0"

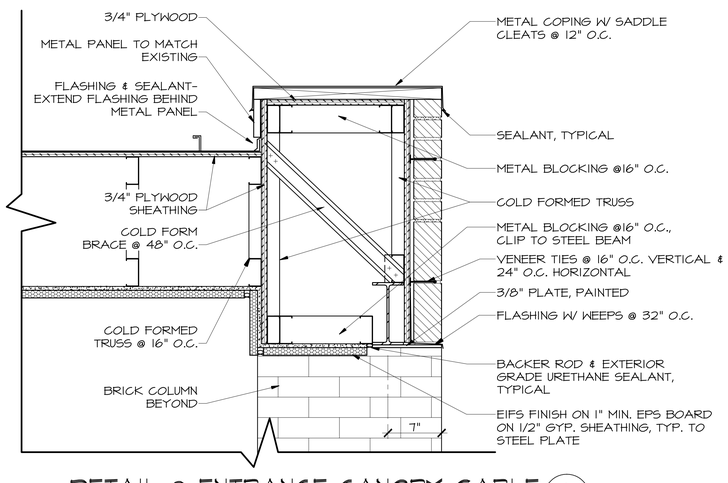

DETAIL @ ENTRANCE CANOPY GABLE (6 / A3 A3)

SCALE: 1 1/2"=1'-0"

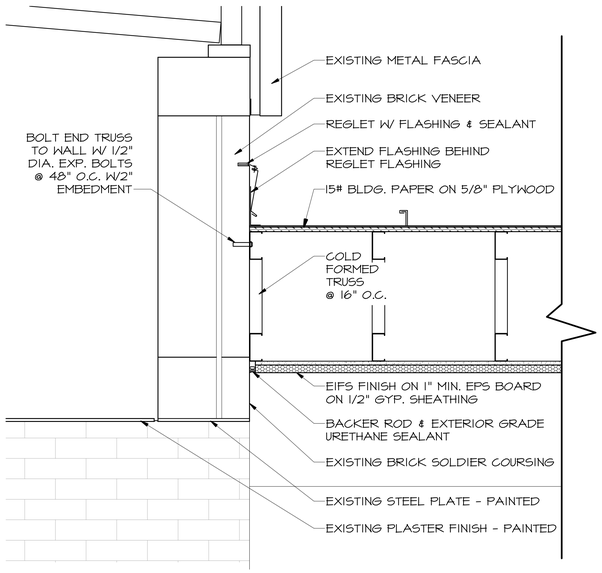

DETAIL @ ROOF TIE-IN @ ENTRANCE CANOPIES (7 / A3 A3)

SCALE: 1 1/2"=1'-0"

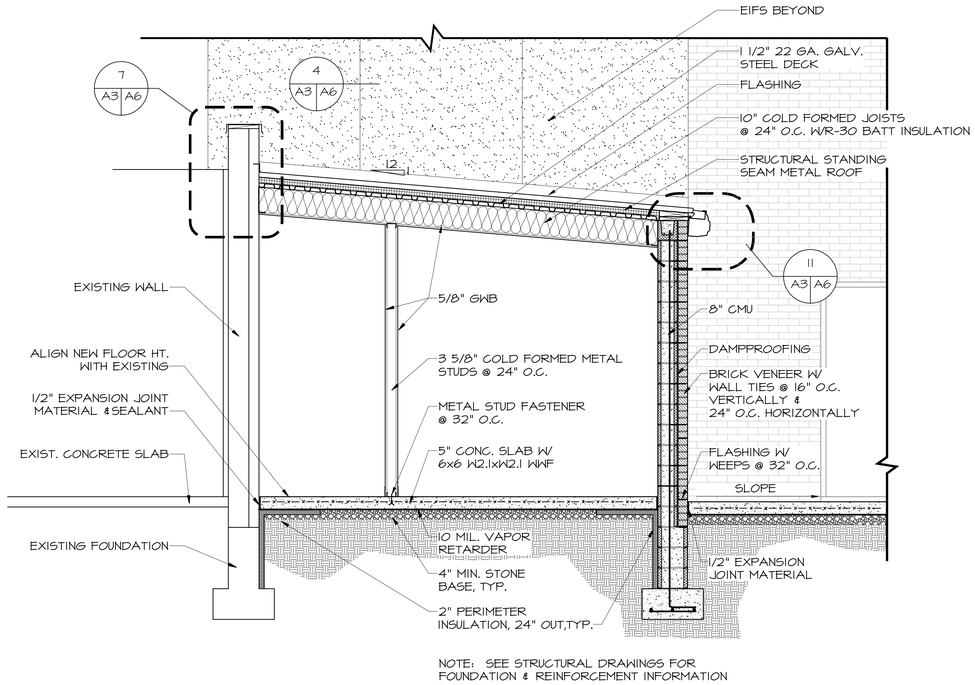

NOTE: SEE STRUCTURAL DRAWINGS FOR FOUNDATION & REINFORCEMENT INFORMATION

SECTION @ MACHINE ROOM (5 / A3.2 A3)

SCALE: 1/2"=1'-0"

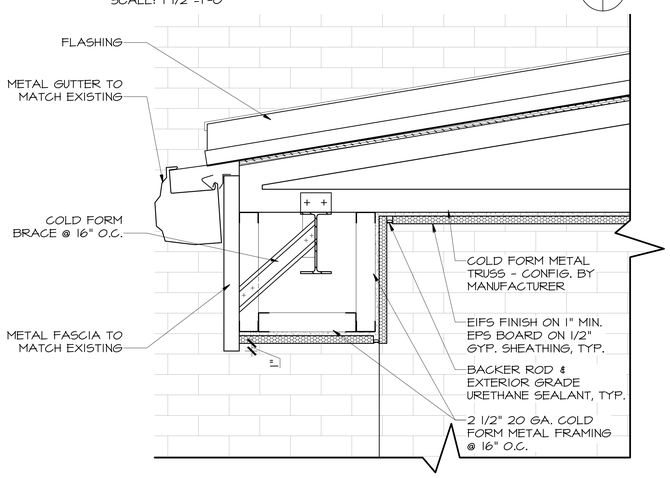

DETAIL @ ENTRANCE CANOPY EAVE (8 / A3 A3)

SCALE: 1 1/2"=1'-0"

REV	DATE	DESCRIPTION	DRAWN	APPR'D
B	01JUL10	ISSUED FOR BID	SJL	CDS
A	11MAY10	ISSUED FOR REVIEW	SJL	CDS

AIR MOBILITY COMMAND
DOVER AIR FORCE BASE, DELAWARE

TITLE: REPAIR RESERVE HEADQUARTERS FACILITY 202

SUBMITTED	APPROVED	APPROVED
CHIEF ENGINEER	CHIEF ENGINEER	COMMANDER

DATE:	PROJECT #:	PLOT SCALE:	DRAWN BY:	DESIGNED BY:
4-30-10	049002	AS NOTED	M. BAUMAN	M. WHEEDLETON

NEW ENT. CANOPIES & MACHINE RM. SECTIONS/DETAILS

W-4497

SHT 11 OF 57

A3

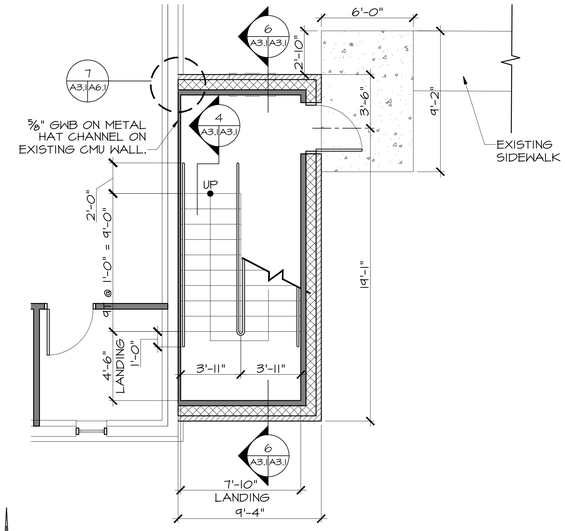

ENLARGED FIRST FLOOR STAIR PLAN

SCALE 1/4"=1'-0"

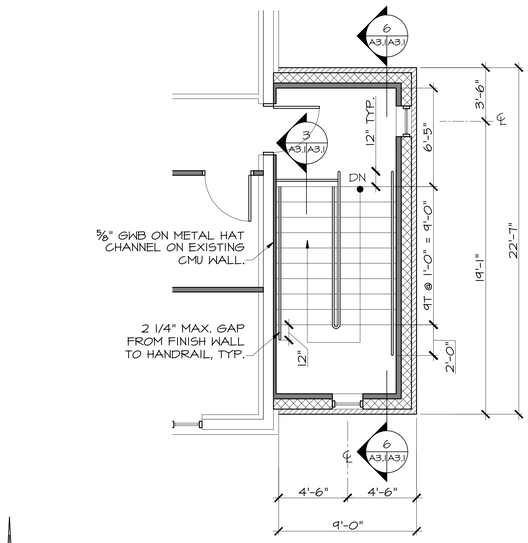

ENLARGED SECOND FLOOR STAIR PLAN

SCALE 1/4"=1'-0"

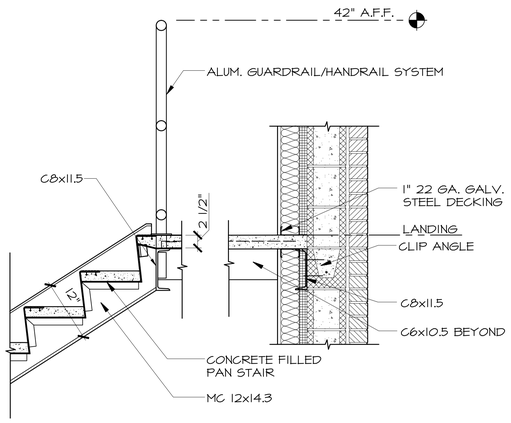

METAL PAN STAIR SECTION @ TOP LANDING

SCALE: 1"=1'-0"

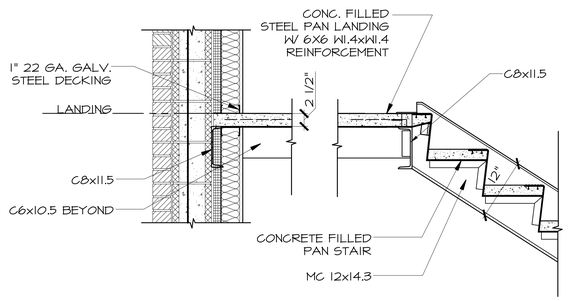

DETAIL @ INTERMEDIATE LANDING

SCALE: 1"=1'-0"

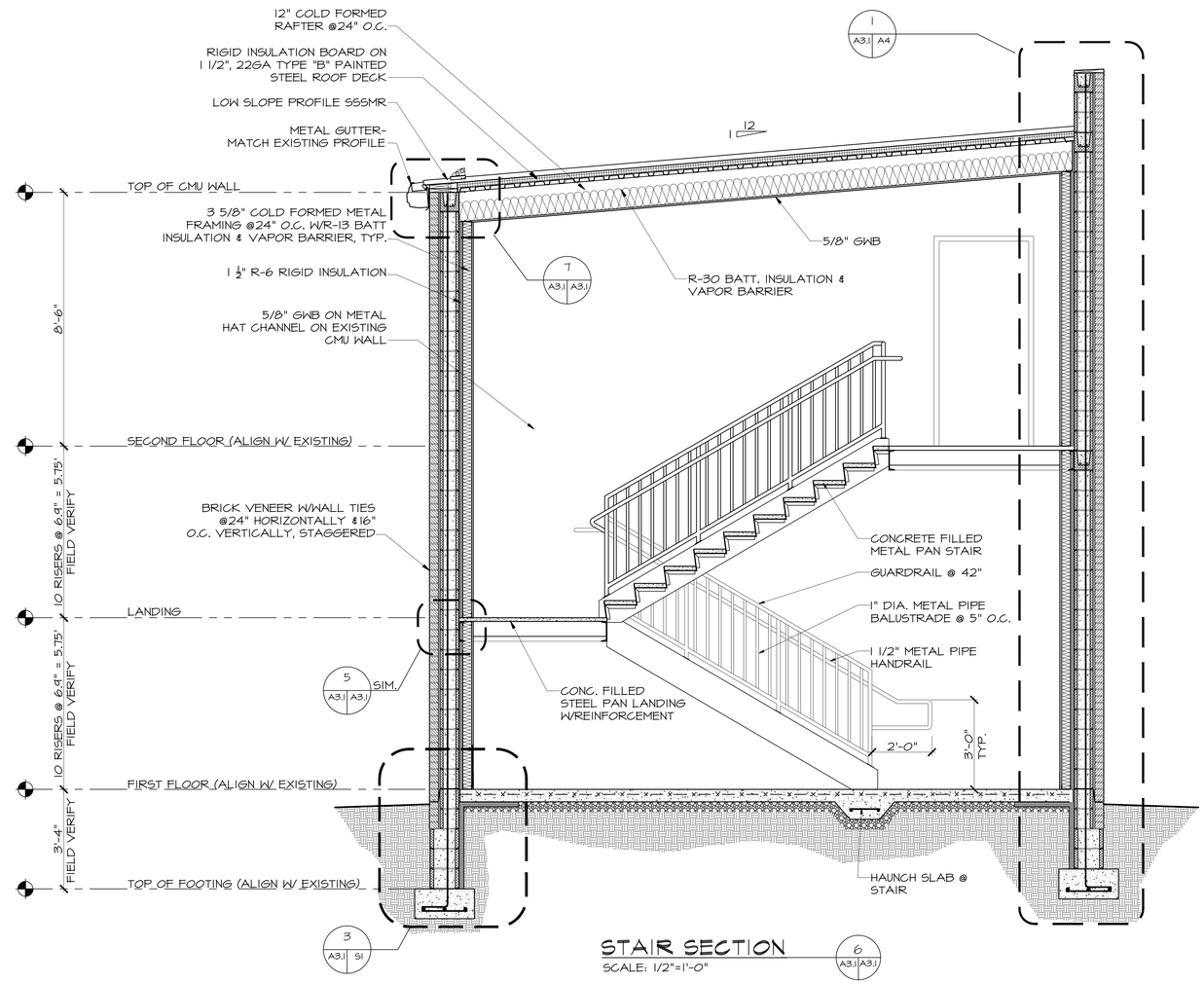

STAIR SECTION

SCALE: 1/2"=1'-0"

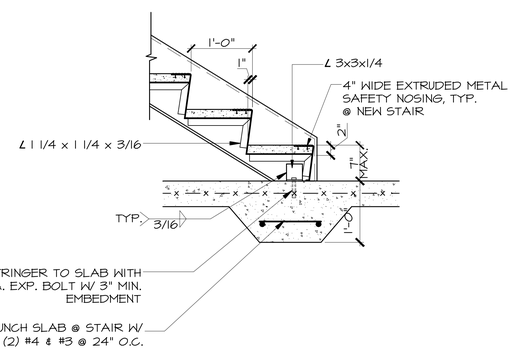

METAL PAN STAIR SECTION @ BASE

SCALE: 1"=1'-0"

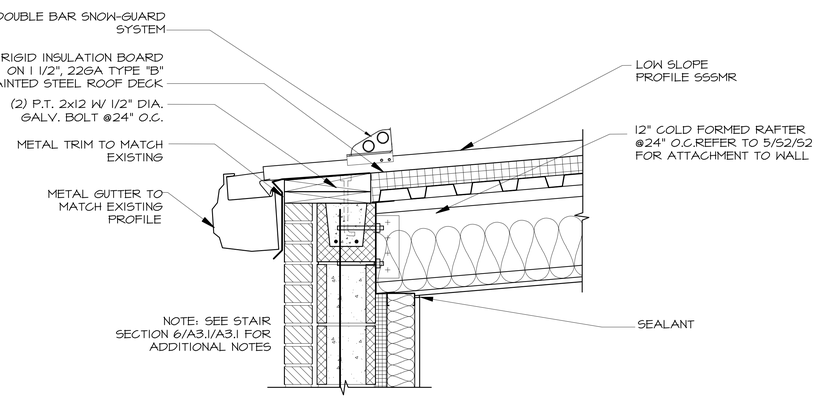

DETAIL @ STAIR EAVE

SCALE: 1 1/2"=1'-0"

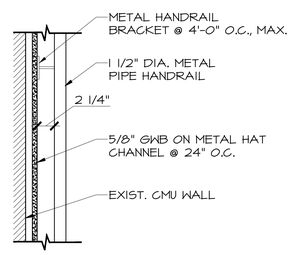

RAILING DETAIL @ EXIST. STAIR

SCALE: 1 1/2"=1'-0"

REV	DATE	DESCRIPTION	DRAWN	APPR'D
B	01JUL10	ISSUED FOR BID	SJL	CDS
A	11MAY10	ISSUED FOR REVIEW	SJL	CDS

AIR MOBILITY COMMAND
DOVER AIR FORCE BASE, DELAWARE

TITLE: REPAIR RESERVE HEADQUARTERS FACILITY 202

SUBMITTED	APPROVED	APPROVED
CHIEF ENGINEER	CHIEF ENGINEER	COMMANDER

DATE:	PROJECT #:	PLOT SCALE:	DRAWN BY:	DESIGNED BY:
4-30-10	049002	AS NOTED	M. BAUMAN	M. WHEEDLETON

NEW STAIR PLANS/SECTIONS/ DETAILS

W-4497

SHT 12 OF 57

A3.1

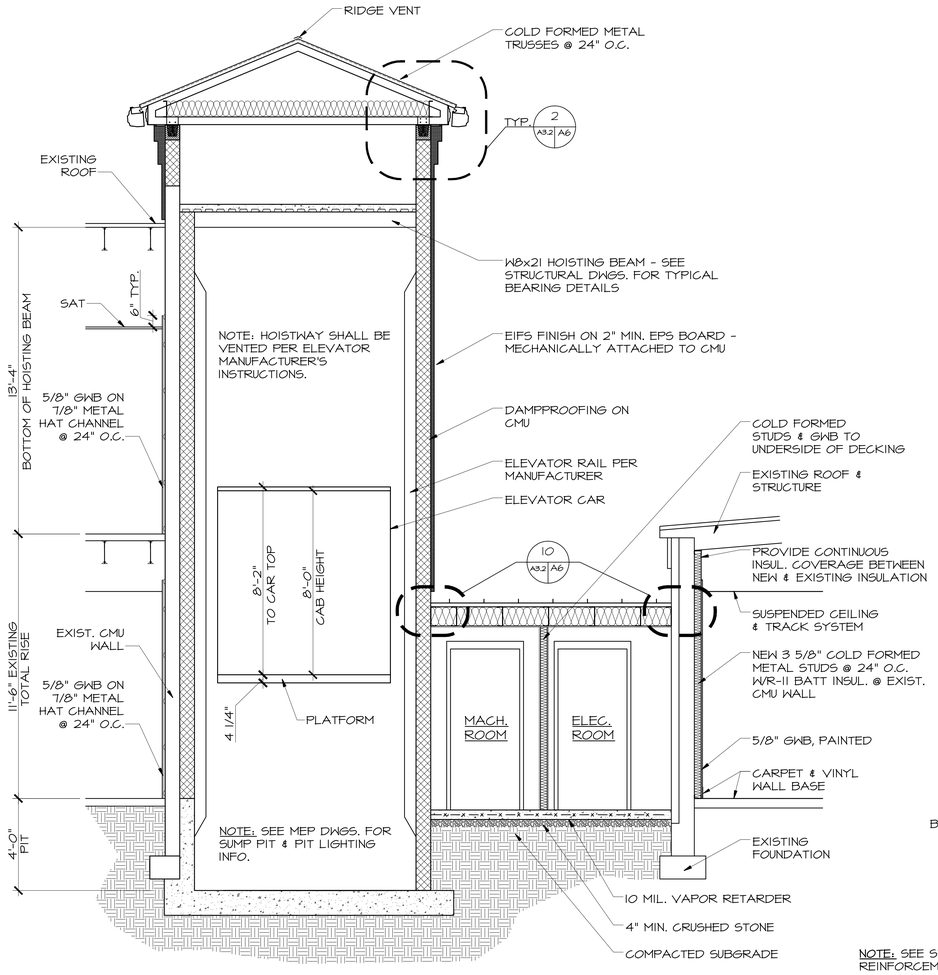

SECTION @ ELEVATOR

SCALE: 3/8"=1'-0" (1 A2 A3.2 A3.2)

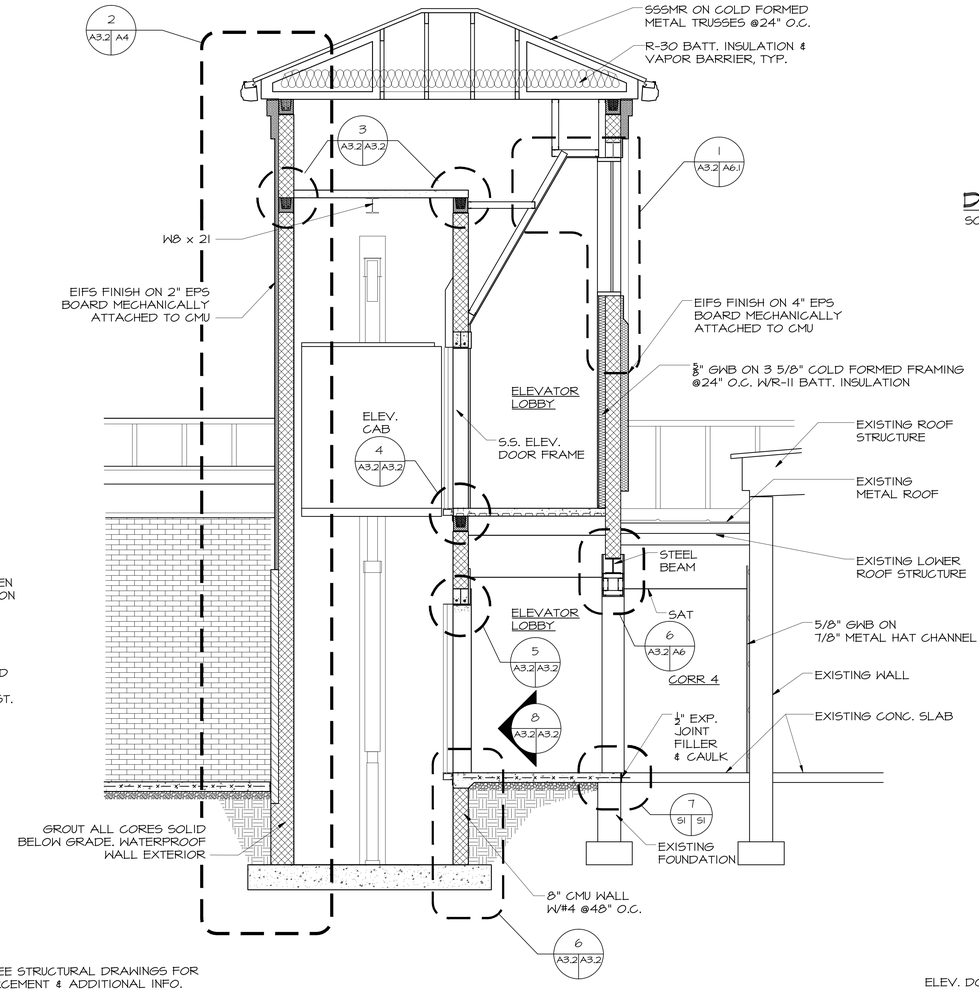

NOTE: SEE STRUCTURAL DRAWINGS FOR REINFORCEMENT & ADDITIONAL INFO.

SECTION @ ELEVATOR

SCALE: 3/8"=1'-0" (2 A2 A3.2 A3.2)

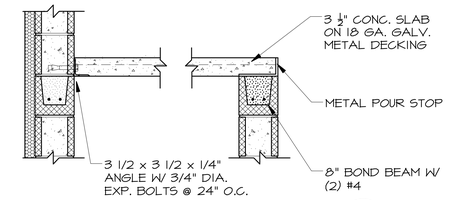

DETAIL @ TOP OF ELEV. SHAFT

SCALE: 1"=1'-0" (3 A3.2 A3.2)

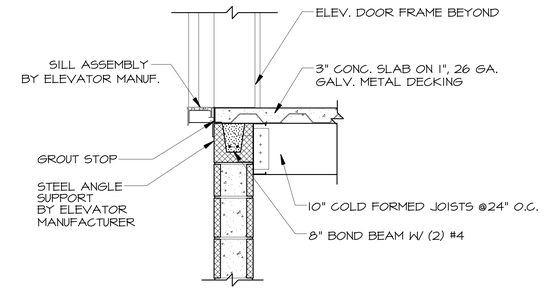

DETAIL @ 2ND FLOOR ELEV. SILL

SCALE: 1"=1'-0" (4 A3.2 A3.2)

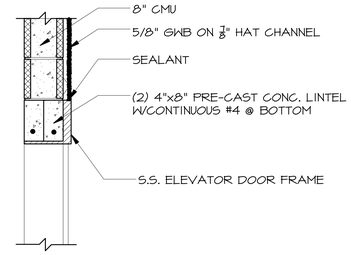

DETAIL @ ELEV. DOOR HEAD

SCALE: 1"=1'-0" (5 A3.2 A3.2)

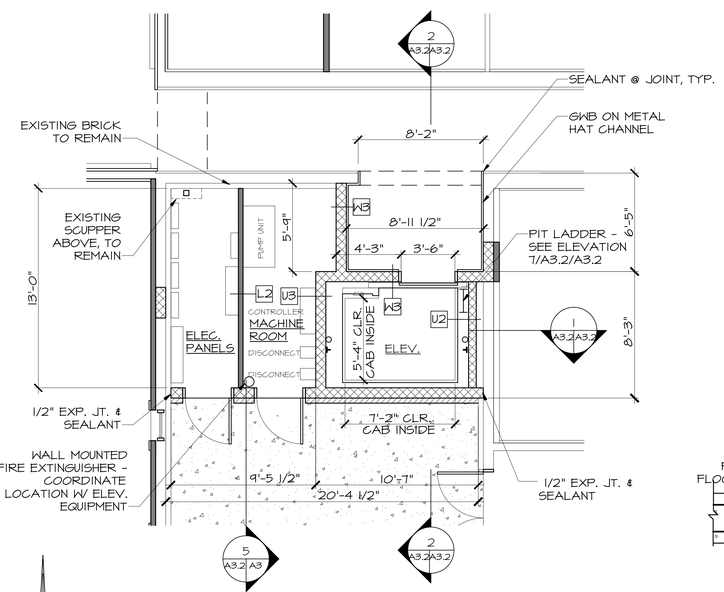

ENLARGED FIRST FLOOR ELEVATOR PLAN

SCALE 1/4"=1'-0" (3 A1 A3.2)

PN

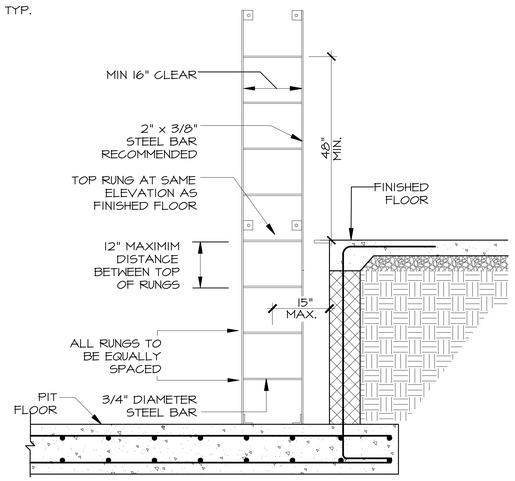

PIT LADDER ELEVATION

SCALE: 3/4"=1'-0" (7 A3.2 A3.2)

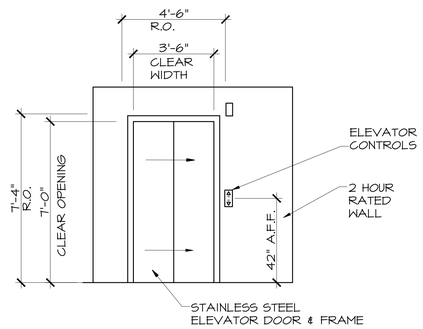

ELEVATOR LOBBY ELEVATION

SCALE: 3/8"=1'-0" (8 A3.2 A3.2)

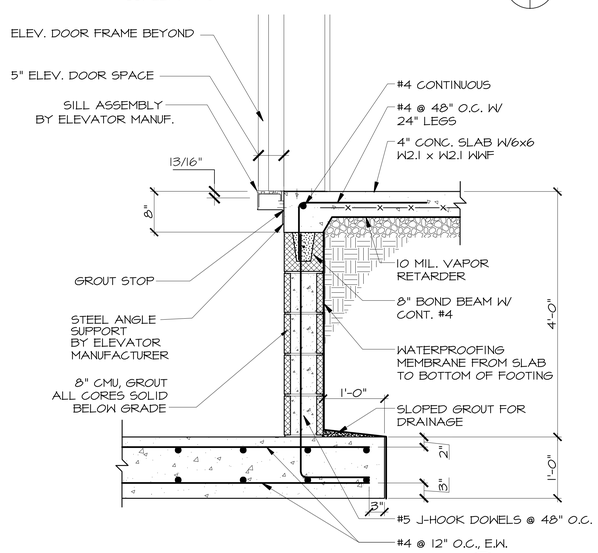

DETAIL @ ELEV. SILL & PIT

SCALE:1"=1'-0" (6 A3.2 A3.2)

NOTE: DETAILS AND NOTES DEPICTED ARE A DESIGN INTENT AND BASED ON CODES AND INDUSTRY STANDARDS AT THE TIME OF DESIGN. MANUFACTURER SHALL SUBMIT SHOP DRAWINGS WHICH SHALL HAVE CHANGES TO DETAILING HIGHLIGHTED.

REV	DATE	DESCRIPTION	DRAWN	APPR'D
B	01JUL10	ISSUED FOR BID	SJL	CDS
A	11MAY10	ISSUED FOR REVIEW	SJL	CDS

AIR MOBILITY COMMAND
DOVER AIR FORCE BASE, DELAWARE

TITLE: REPAIR RESERVE HEADQUARTERS FACILITY 202

SUBMITTED	APPROVED	APPROVED
CHIEF ENGINEER	CHIEF ENGINEER	COMMANDER

DATE:	PROJECT #:	PLOT SCALE:	DRAWN BY:	DESIGNED BY:
4-30-10	049002	AS NOTED	M. BAUMAN	M. WHEEDLETON

ELEVATOR PLAN/ SECTIONS/DETAILS

W-4497

SHT 13 OF 57

A3.2

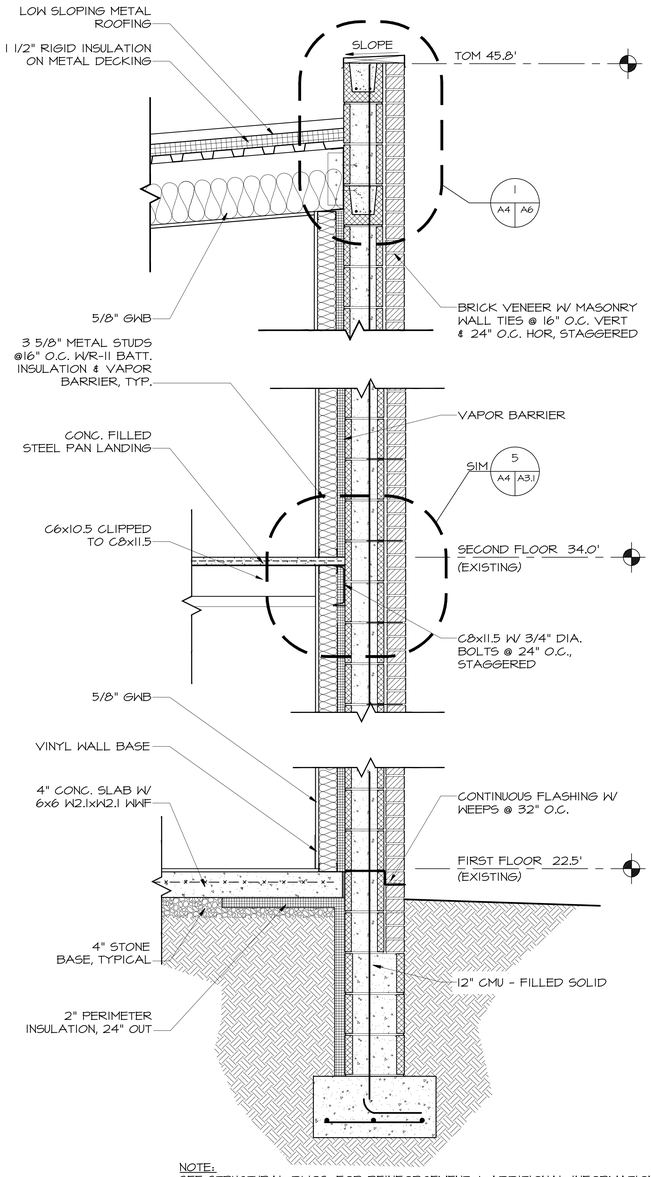

NOTE:
SEE STRUCTURAL DWGS. FOR REINFORCEMENT & ADDITIONAL INFORMATION

WALL SECTION @ STAIR

1 / A3 A4

SCALE: 1"=1'-0"

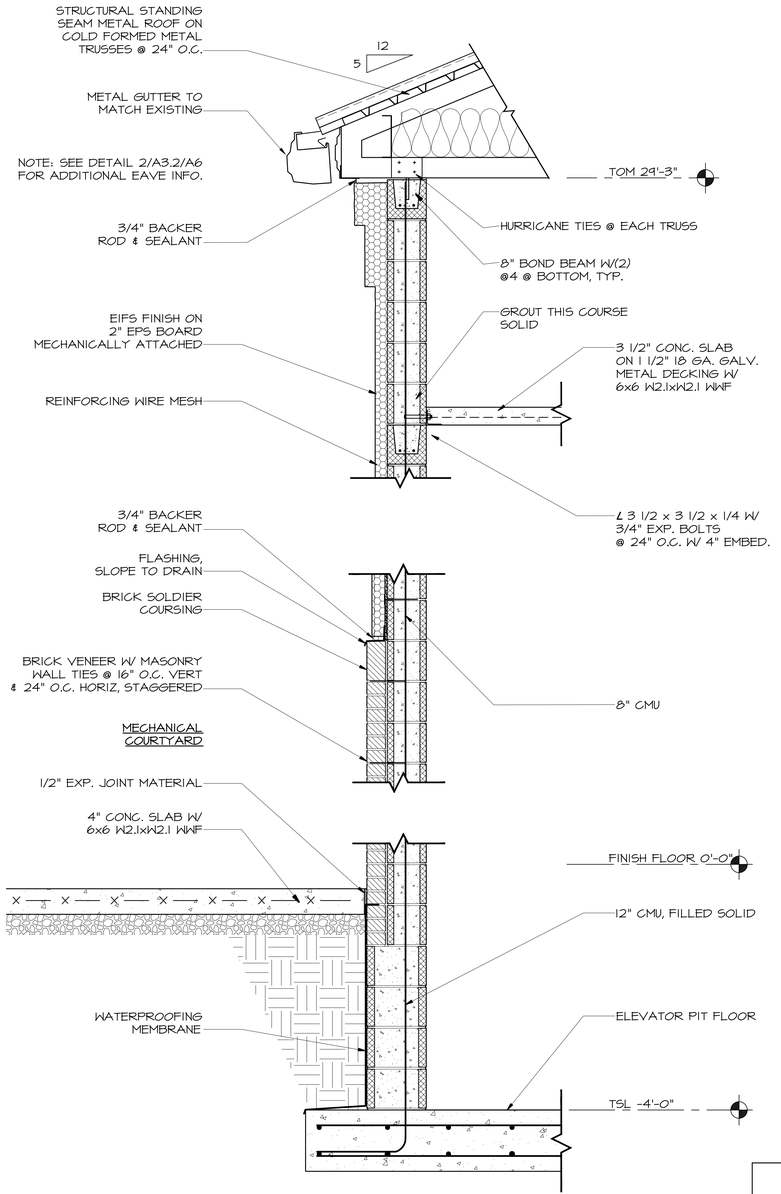

NOTE:
SEE DETAIL 6/A3.2/A3.2 FOR REINFORCEMENT & ADDITIONAL INFORMATION

WALL SECTION @ ELEVATOR SHAFT

2 / A3.2 A4

SCALE: 1"=1'-0"

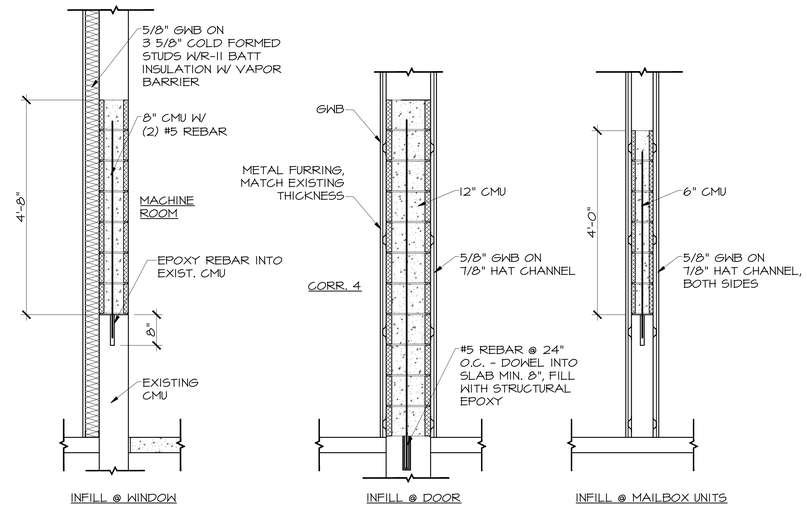

SECTION @ WALL INFILL

3 / A1 A4

SCALE: 3/4"=1'-0"

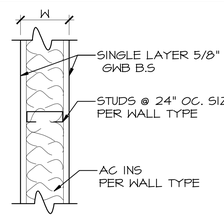

K				
TYPE	STUD SIZE	W	STC	
1	3-5/8"	4-7/8"		
4	3-5/8" W/ AC	INS 4-7/8"	45-49	

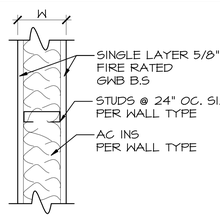

L				1 HR.
TYPE	STUD SIZE	W	STC	UL #
1	3-5/8" W/ AC	4-7/8"	45-49	U465
2	3-5/8"	4-7/8"		U465

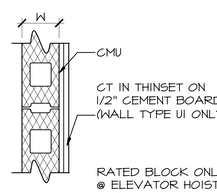

U				2 HR.
TYPE	MASONRY SIZE	W	STC	UL #
1	4"	4-3/4"		
2	6"	5-5/8"		
3	8"	7-5/8"		U906

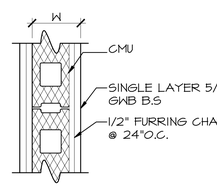

V				
TYPE	MASONRY SIZE	W	STC	UL #
2	6"	7-1/8"		
3	8"	9-7/8"		
4	12"	13-7/8"		

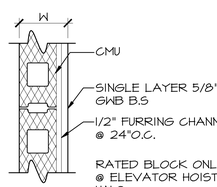

W				2 HR
TYPE	MASONRY SIZE	W	STC	UL #
3	8"	8-3/4"		U906

REV	DATE	DESCRIPTION	DRAWN	APPR'D
B	01JUL10	ISSUED FOR BID	SJL	CDS
A	11MAY10	ISSUED FOR REVIEW	SJL	CDS

AIR MOBILITY COMMAND
DOVER AIR FORCE BASE, DELAWARE

TITLE: REPAIR RESERVE HEADQUARTERS FACILITY 202

SUBMITTED	APPROVED	APPROVED
CHIEF ENGINEER	CHIEF ENGINEER	COMMANDER

DATE:	PROJECT #:	PLOT SCALE:	DRAWN BY:	DESIGNED BY:
4-30-10	049002	AS NOTED	M. BAUMAN	M. WHEEDLETON

WALL SECTIONS & WALL TYPES

W-4497

SHT 14 OF 57

A4

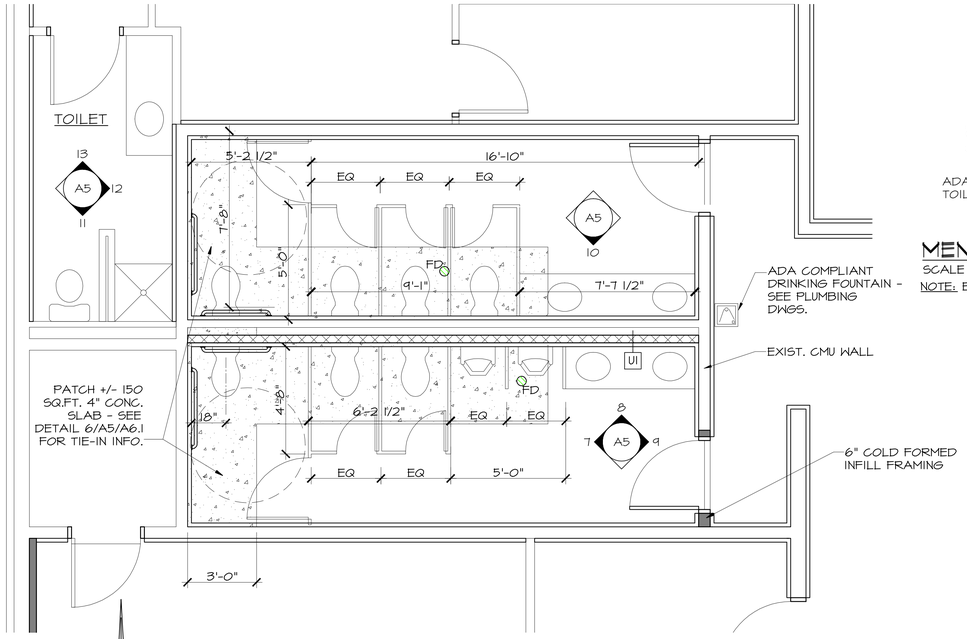

ENLARGED FIRST FLOOR TOILETS PLAN (1 / A1 | A5)

SCALE 3/8"=1'-0"

PN

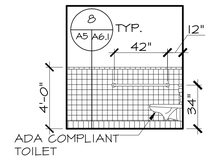

MENS ROOM ELEV. (7 / A5 | A5)

SCALE 1/4"=1'-0"

NOTE: ELEVATION MIRRORED @ WOMENS

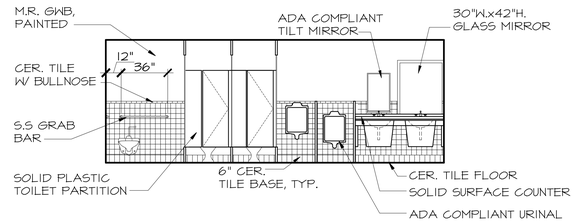

MENS ROOM ELEV. (8 / A5 | A5)

SCALE 1/4"=1'-0"

NOTE: DIMENSIONS NOTED ARE TYP. FOR ALL TOILETS.

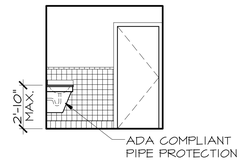

MENS ROOM ELEV. (9 / A5 | A5)

SCALE 1/4"=1'-0"

NOTE: ELEVATION MIRROR @ WOMENS

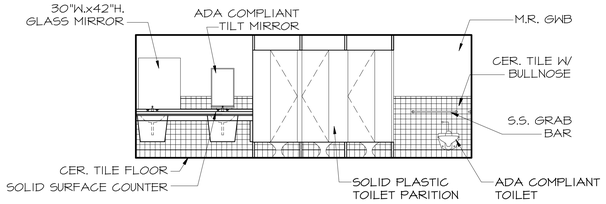

WOMENS ROOM ELEV. (10 / A5 | A5)

SCALE 1/4"=1'-0"

NOTE: DIMENSIONS NOTED ARE TYP. FOR ALL TOILETS.

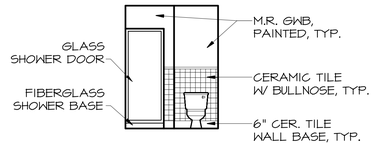

TOILET ROOM ELEV. (11 / A5 | A5)

SCALE 1/4"=1'-0"

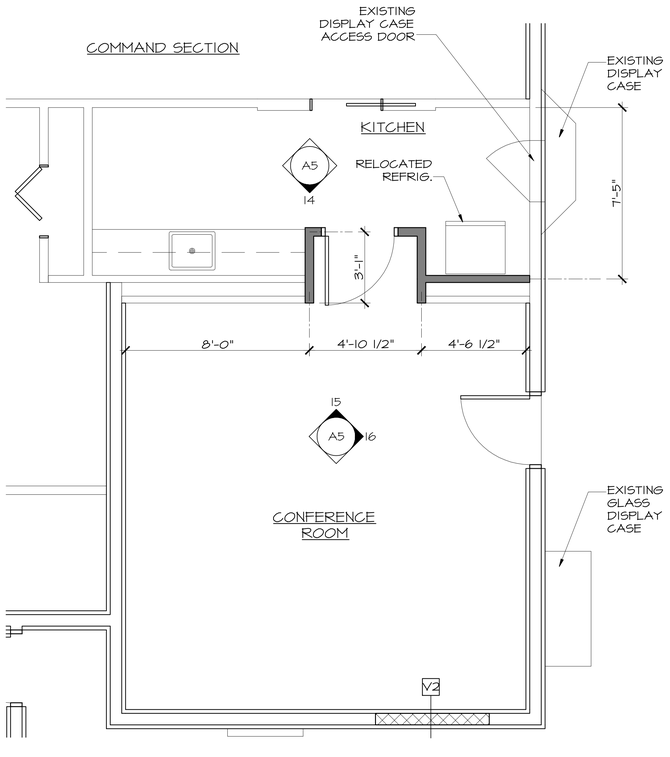

ENLARGED KIT. & CONF. RM. PLAN (3 / A1 | A5)

SCALE 3/8"=1'-0"

PN

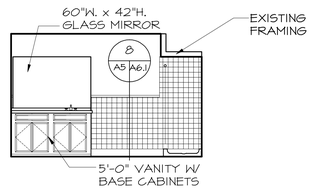

TOILET ROOM ELEV. (12 / A5 | A5)

SCALE 1/4"=1'-0"

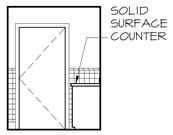

TOILET ROOM ELEV. (13 / A5 | A5)

SCALE 1/4"=1'-0"

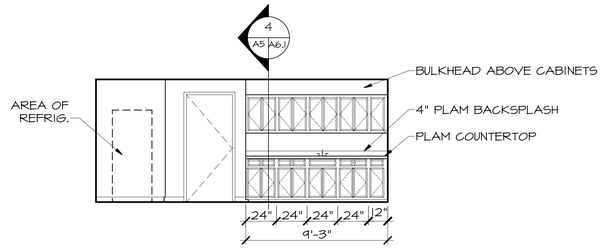

KITCHEN ELEV. (14 / A5 | A5)

SCALE 1/4"=1'-0"

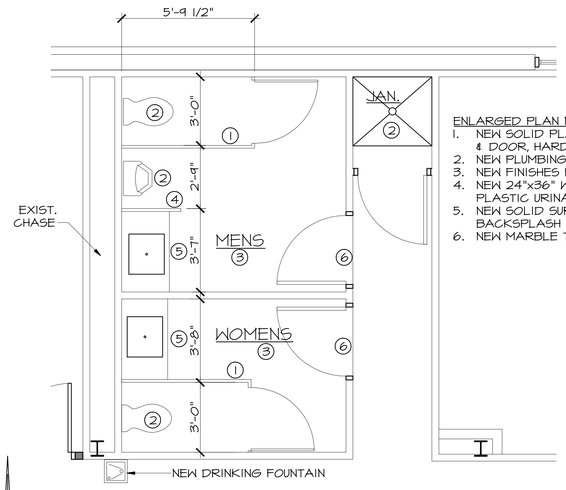

ENLARGED PLAN NOTES:

1. NEW SOLID PLASTIC TOILET PARTITION & DOOR, HARDWARE & SUPPORTS.
2. NEW PLUMBING FIXTURE.
3. NEW FINISHES PER FINISH SCHEDULE.
4. NEW 24"x36" WALL MOUNTED SOLID PLASTIC URINAL SCREEN.
5. NEW SOLID SURFACE COUNTER, BACKSPLASH AND LAVATORY.
6. NEW MARBLE THRESHOLD & SEALANTS.

PN

ENLARGED SECOND FLOOR TOILETS PLAN (4 / A1 | A5)

SCALE 3/8"=1'-0"

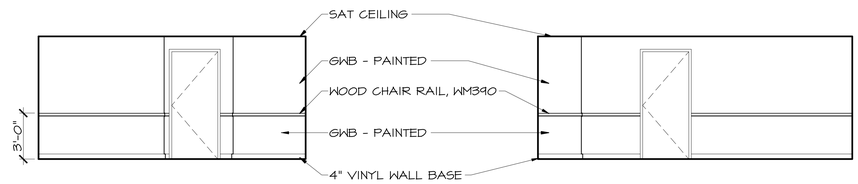

CONFERENCE RM. ELEV. (15 / A5 | A5)

SCALE 1/4"=1'-0"

CONFERENCE RM. ELEV. (16 / A5 | A5)

SCALE 1/4"=1'-0"

REV	DATE	DESCRIPTION	DRAWN	APPR'D
B	01JUL10	ISSUED FOR BID	SJL	CDS
A	11MAY10	ISSUED FOR REVIEW	SJL	CDS

AIR MOBILITY COMMAND
DOVER AIR FORCE BASE, DELAWARE

TITLE: REPAIR RESERVE HEADQUARTERS FACILITY 202

SUBMITTED	APPROVED	APPROVED
CHIEF ENGINEER	CHIEF ENGINEER	COMMANDER

DATE:	PROJECT #:	PLOT SCALE:	DRAWN BY:	DESIGNED BY:
4-30-10	049002	AS NOTED	M. BAUMAN	M. WHEEDLETON

ENLARGED PLANS & INTERIOR ELEVATIONS

W-4497

SHT 15 OF 57

A5

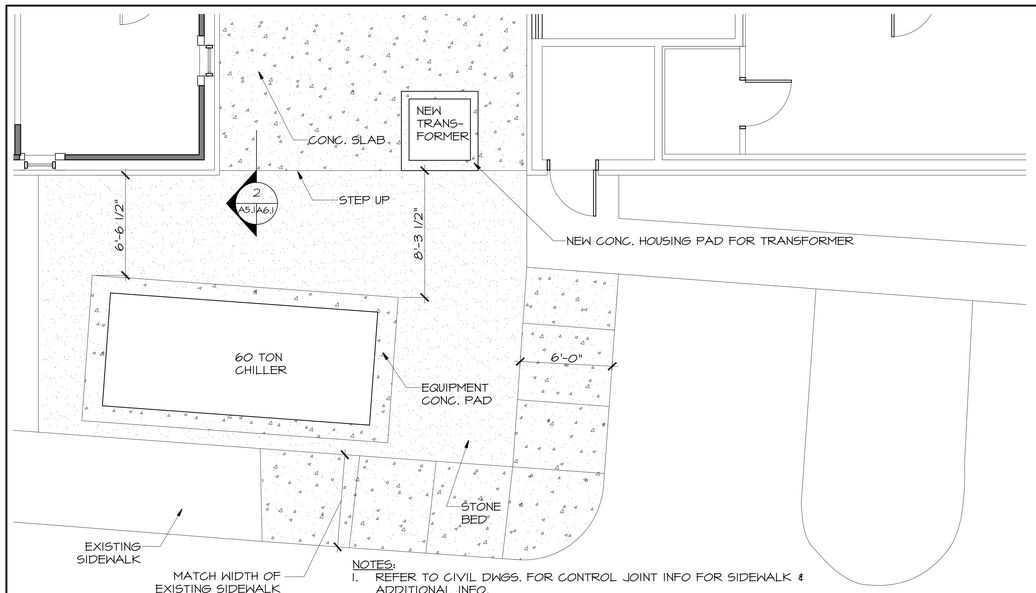

NOTES:
1. REFER TO CIVIL DWGS. FOR CONTROL JOINT INFO FOR SIDEWALK & ADDITIONAL INFO.
2. COORDINATE CHILLER EQUIPMENT PAD W/ CIVIL.
3. CONTRACTOR SHALL SUBMIT EQUIPMENT PAD SIZES @ NEW CHILLER & NEW TRANSFORMER BASED ON LOAD REQUIREMENTS OF APPROVED EQUIPMENT.

PN

ENLARGED PLAN @ MECHANICAL EQUIP. (1 / A1 A5.1)
SCALE 1/4"=1'-0"

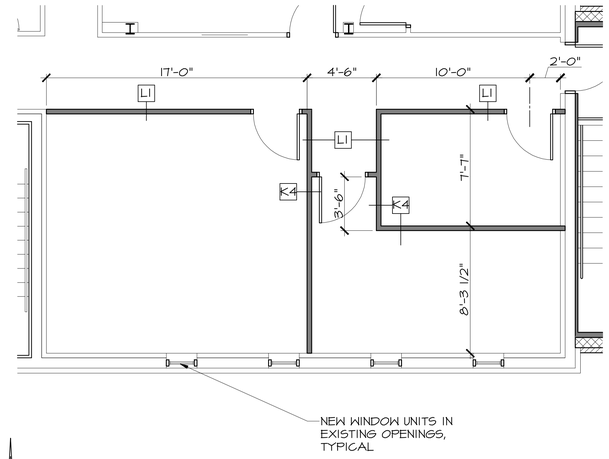

PN

ENLARGED PLAN @ ROOMS 204, 205 & 206 (2 / A1 A5.1)
SCALE 1/4"=1'-0"

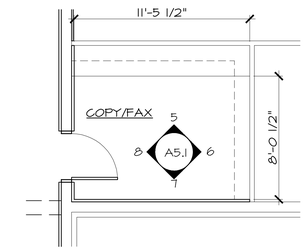

PN

ENLARGED COPY/FAX PLAN (3 / A1 A5.1)
SCALE 1/4"=1'-0"

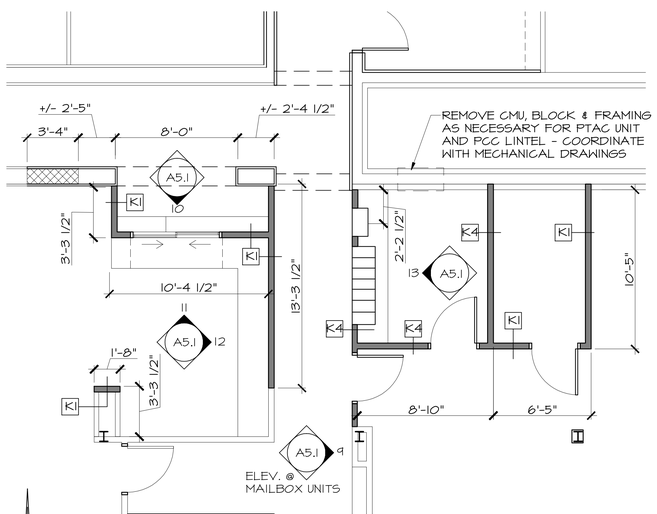

PN

ENLARGED PLAN @ CUSTOMER SERVICE & MAIL ROOM AREA (4 / A1 A5.1)
SCALE 1/4"=1'-0"

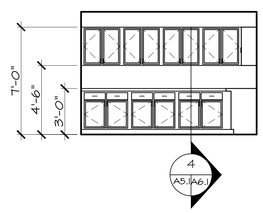

COPY/FAX ELEV. (5 / A5.1 A5.1)
SCALE 1/4"=1'-0"

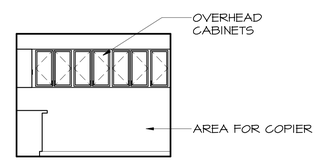

COPY/FAX ELEV. (6 / A5.1 A5.1)
SCALE 1/4"=1'-0"

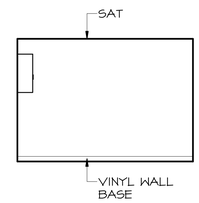

COPY/FAX ELEV. (7 / A5.1 A5.1)
SCALE 1/4"=1'-0"

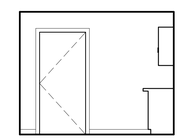

COPY/FAX ELEV. (8 / A5.1 A5.1)
SCALE 1/4"=1'-0"

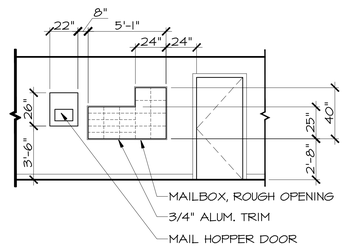

MAILBOX UNIT ELEV. (9 / A5.1 A5.1)
SCALE 1/4"=1'-0"

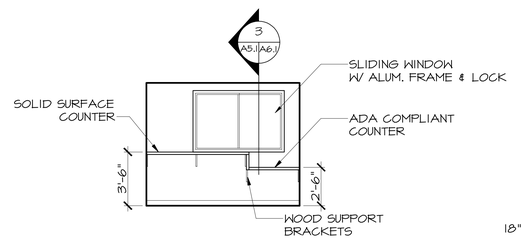

CUSTOMER SERVICE ELEV. (10 / A5.1 A5.1)
SCALE 1/4"=1'-0"

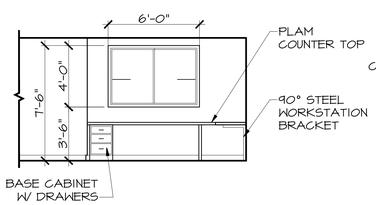

CUSTOMER SERVICE ELEV. (11 / A5.1 A5.1)
SCALE 1/4"=1'-0"

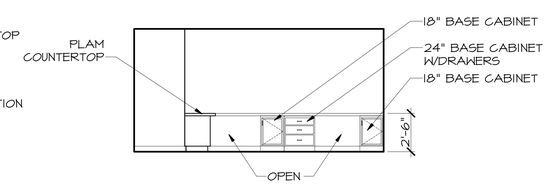

CUSTOMER SERVICE ELEV. (12 / A5.1 A5.1)
SCALE 1/4"=1'-0"

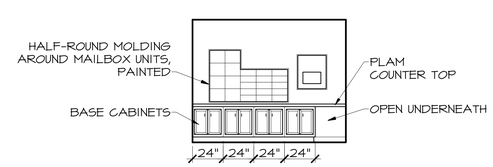

MAIL ROOM ELEVATION (13 / A5.1 A5.1)
SCALE 1/4"=1'-0"

REV	DATE	DESCRIPTION	DRAWN	APPR'D
B	01JUL10	ISSUED FOR BID	SJL	CDS
A	11MAY10	ISSUED FOR REVIEW	SJL	CDS

AIR MOBILITY COMMAND
DOVER AIR FORCE BASE, DELAWARE

TITLE: REPAIR RESERVE HEADQUARTERS FACILITY 202

SUBMITTED	APPROVED	APPROVED
CHIEF ENGINEER	CHIEF ENGINEER	COMMANDER

DATE:	PROJECT #:	PLOT SCALE:	DRAWN BY:	DESIGNED BY:
4-30-10	049002	AS NOTED	M. BAUMAN	M. WHEEDLETON

ENLARGED PLANS & INTERIOR ELEVATIONS

W-4497

SHT 16 OF 57

A5.1

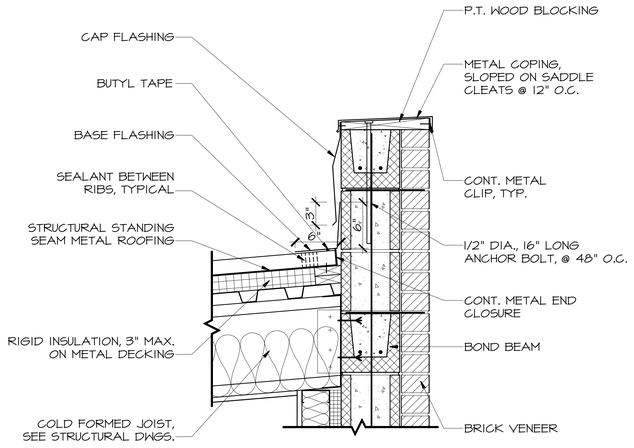

SECTION @ STAIRWELL TOWER EAVE (1 / A4 A6)

SCALE: 1 1/2"=1'-0"

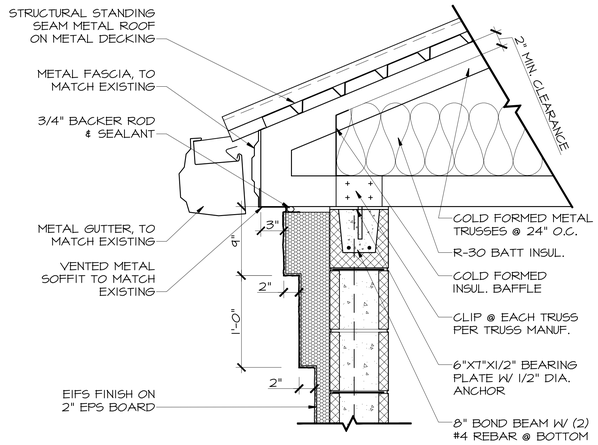

SECTION @ ELEVATOR TOWER EAVE (2 / A1.2 A3.2 A6)

SCALE: 1 1/2"=1'-0"

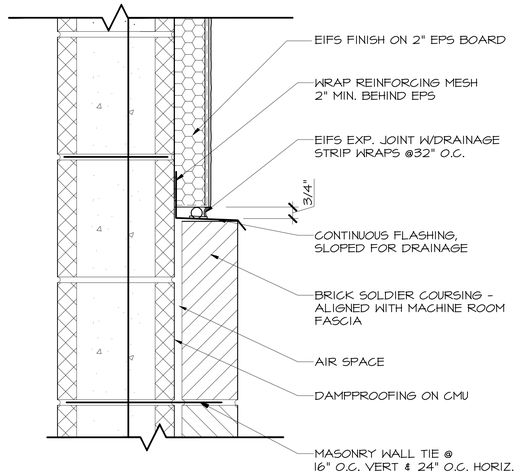

DETAIL @ EIFS & BRICK (3 / A2 A6)

SCALE: 3"=1'-0"

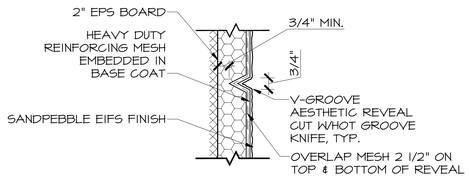

DETAIL @ EIFS REVEAL, TYPICAL (4 / A3 A2 A6)

SCALE: 3"=1'-0"

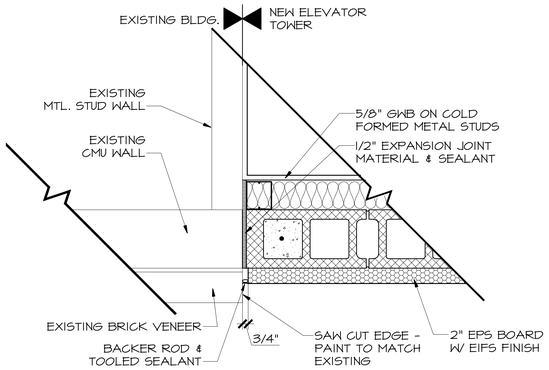

DETAIL @ EXISTING/ADDITION JOINT (8 / A2 A6)

SCALE: 1 1/2"=1'-0"

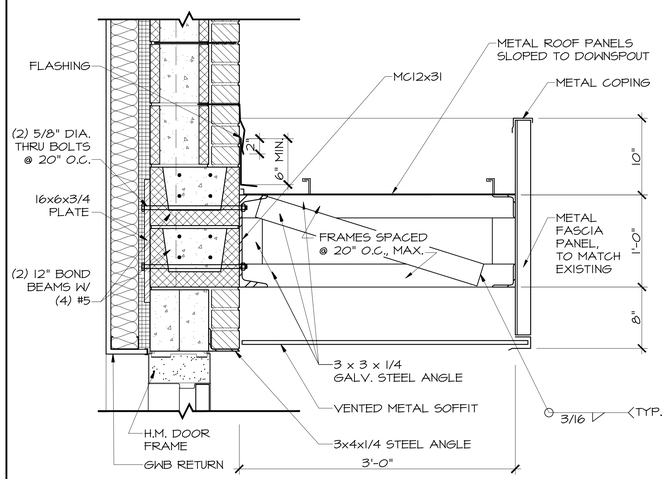

SECTION @ NEW CANOPY (5 / A2 A6)

SCALE: 1 1/2"=1'-0"

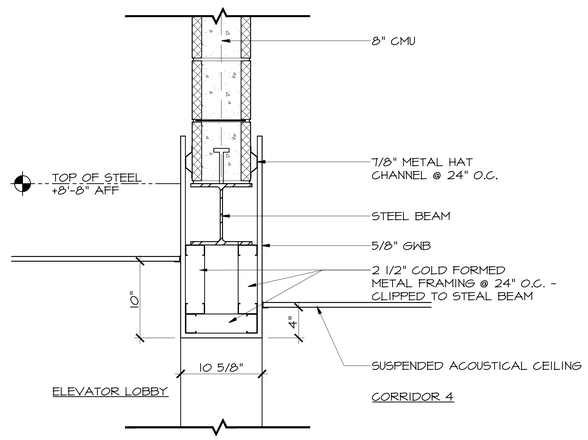

SECTION @ ELEV. LOBBY BULKHEAD (6 / A3.2 A6)

SCALE: 1 1/2"=1'-0"

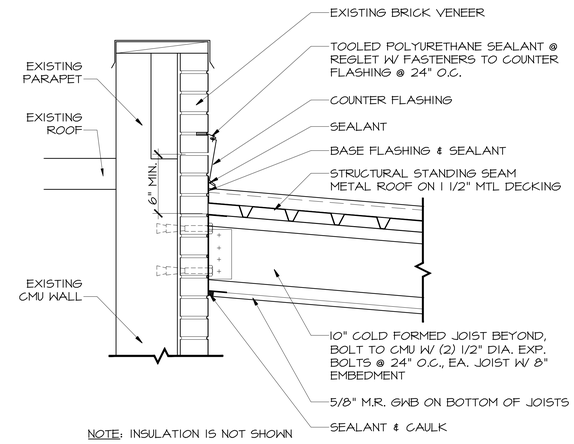

NOTE: INSULATION IS NOT SHOWN

DETAIL @ MACHINE RM. ROOF FLASHING (7 / A3 A6)

SCALE: 1 1/2"=1'-0"

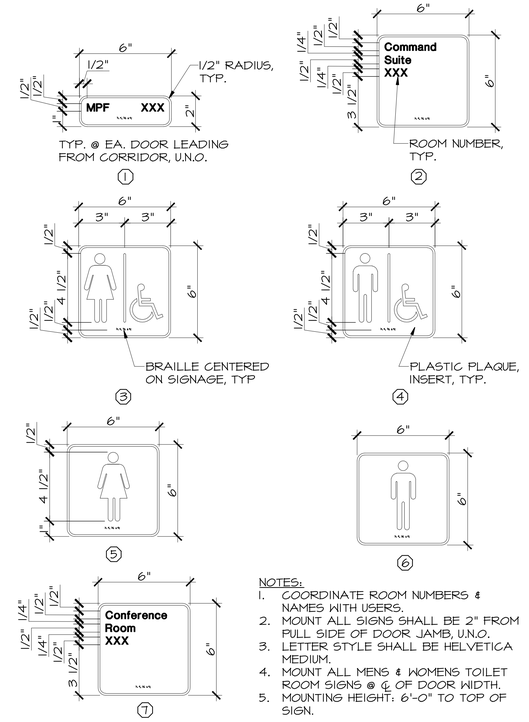

NOTES:

1. COORDINATE ROOM NUMBERS & NAMES WITH USERS.
2. MOUNT ALL SIGNS SHALL BE 2" FROM PULL SIDE OF DOOR JAMB, U.N.O.
3. LETTER STYLE SHALL BE HELVETICA MEDIUM.
4. MOUNT ALL MENS & WOMENS TOILET ROOM SIGNS @ ℄ OF DOOR WIDTH.
5. MOUNTING HEIGHT: 6'-0" TO TOP OF SIGN.

INTERIOR SIGNAGE TYPES

SCALE: 3"=1'-0"

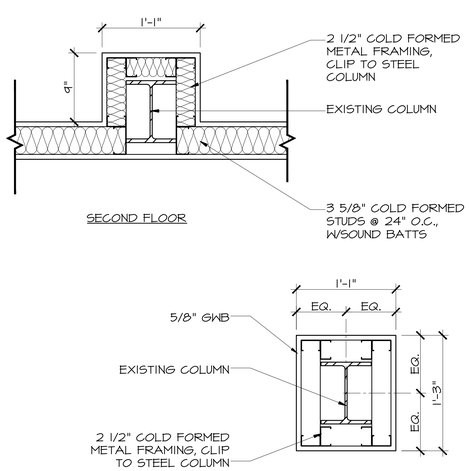

DETAIL @ EXISTING INT. COL. (9 / A1 A6)

SCALE: 1 1/2"=1'-0"

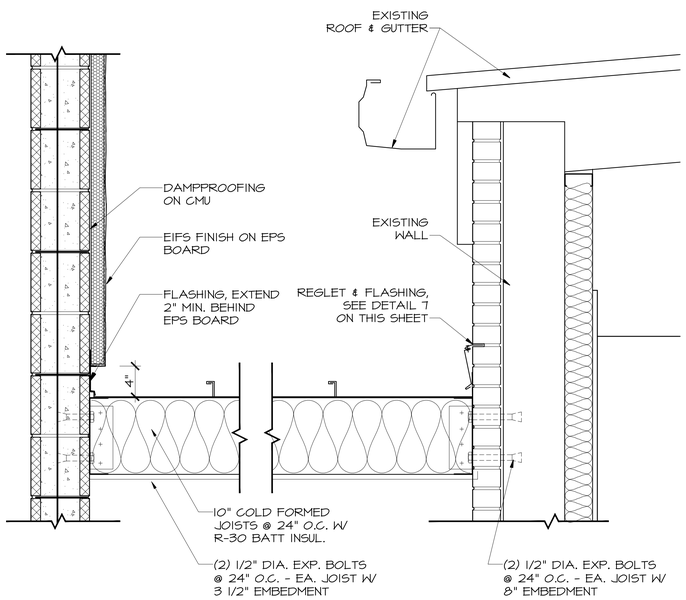

SECTION @ MACHINE RM ROOF (10 / A3.2 A6)

SCALE: 1 1/2"=1'-0"

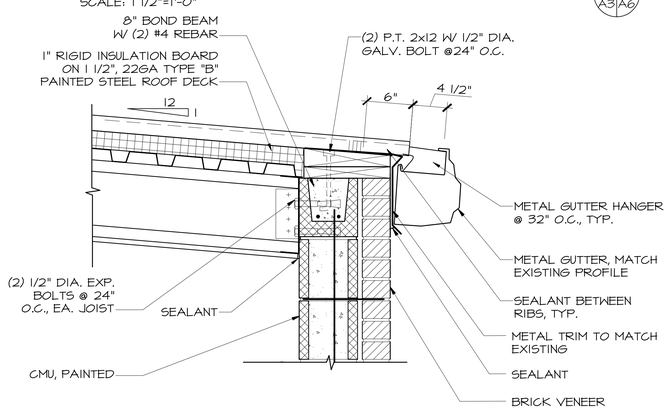

SECTION @ MACHINE RM. EAVE (11 / A1.2 A3 A6)

SCALE: 1 1/2"=1'-0"

REV	DATE	DESCRIPTION	DRAWN	APPR'D
B	01JUL10	ISSUED FOR BID	SJL	CDS
A	11MAY10	ISSUED FOR REVIEW	SJL	CDS

AIR MOBILITY COMMAND
DOVER AIR FORCE BASE, DELAWARE

TITLE: REPAIR RESERVE HEADQUARTERS FACILITY 202

SUBMITTED	APPROVED	APPROVED
CHIEF ENGINEER	CHIEF ENGINEER	COMMANDER

DATE:	PROJECT #:	PLOT SCALE:	DRAWN BY:	DESIGNED BY:
4-30-10	049002	AS NOTED	M. BAUMAN	M. WHEEDLETON

DETAILS

W-4497

SHT 17 OF 57

A6

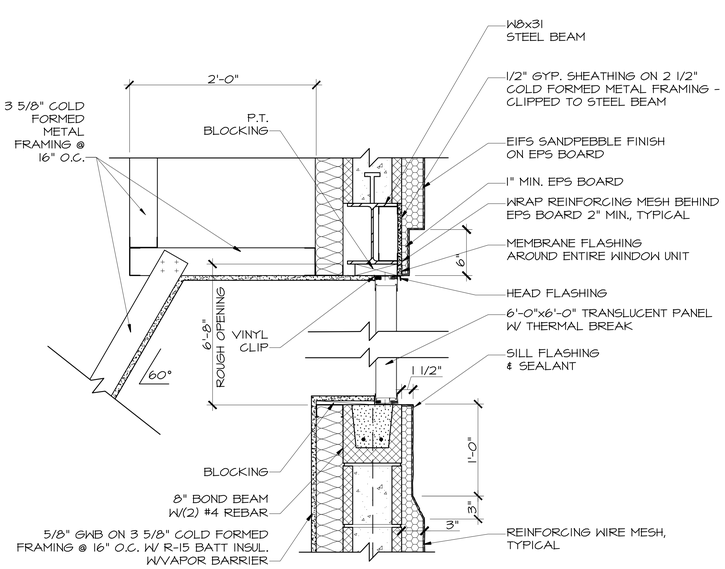

DETAIL @ TRANSLUCENT PANEL

SCALE: 1 1/2"=1'-0"

1 | A3.2 | A2 | A6.1

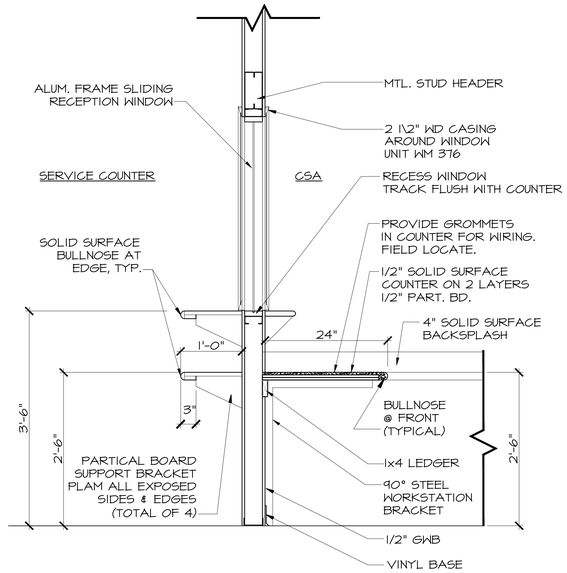

NOTE: SLIDING WINDOW DETAIL SIMILAR AT COMMAND SECTION WINDOW

SECTION @ SERVICE COUNTER

1"=1'-0"

3 | A5.1 | A6.1

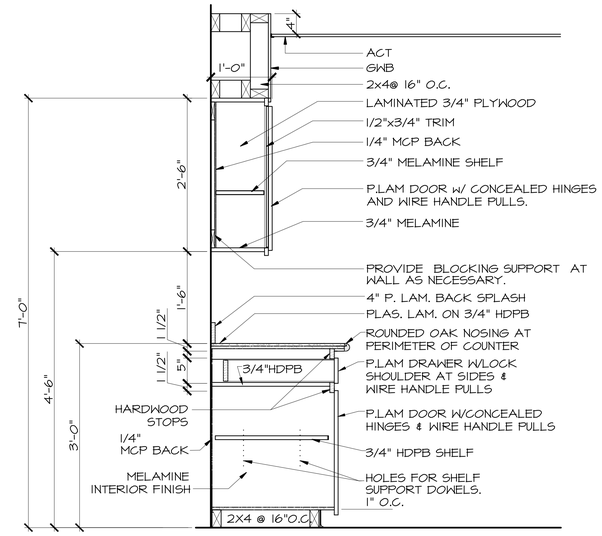

SECTION @ CABINET

1"=1'-0"

4 | A5.1 | A5 | A6.1

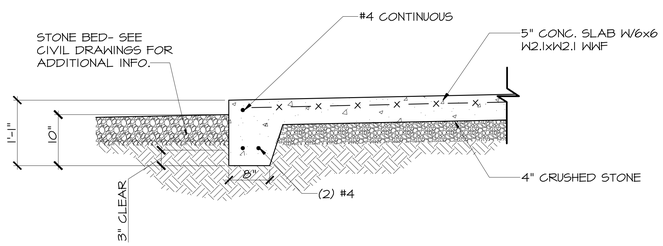

SECTION @ MECH. YARD STEP UP

SCALE: 1"=1'-0"

2 | A5.1 | A6.1

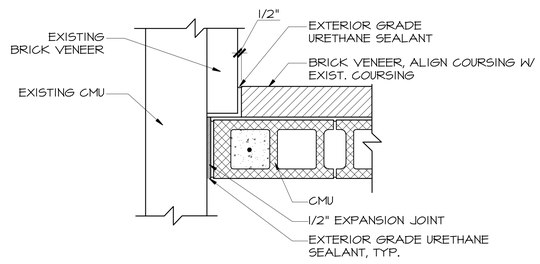

NOTE: INTERIOR WALL INFO. NOT SHOWN FOR CLARITY

TYP. JOINT @NEW/EXISTING BRICK VENEER

1 1/2"=1'-0"

7 | A3.1 | A6.1

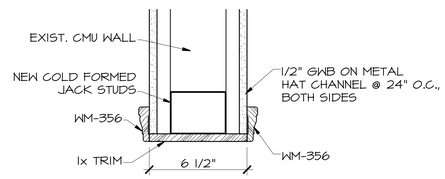

CASED OPENING DETAIL @ CMU

3"=1'-0"

9 | A1 | A6.1

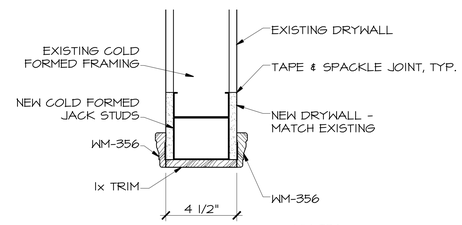

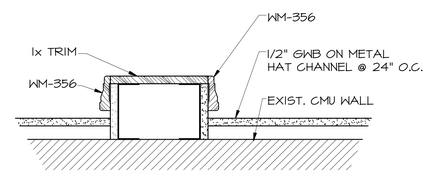

CASED OPENING DETAIL @ STUD WALL

3"=1'-0"

10 | A1 | A6.1

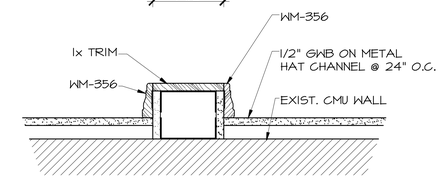

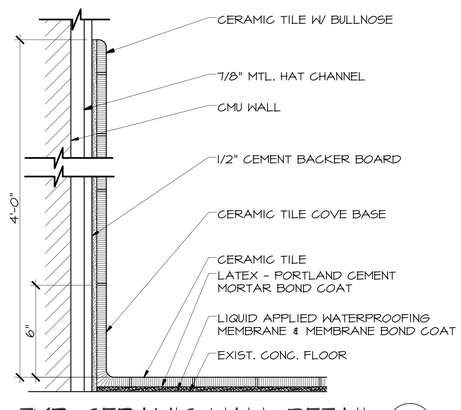

TYP. CERAMIC WALL DETAIL

3"=1'-0"

8 | A5 | A6.1

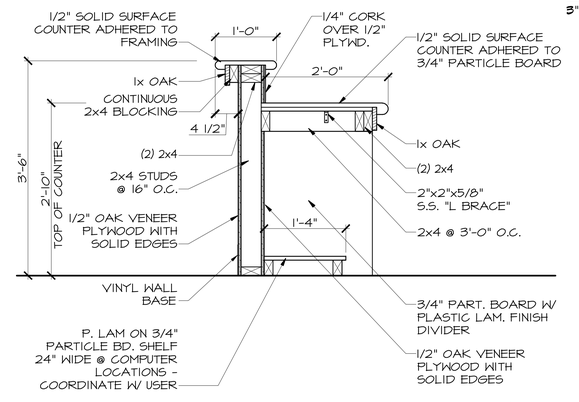

SECTION @ COUNTER IN MPF 120

1"=1'-0"

11 | A1 | A6.1

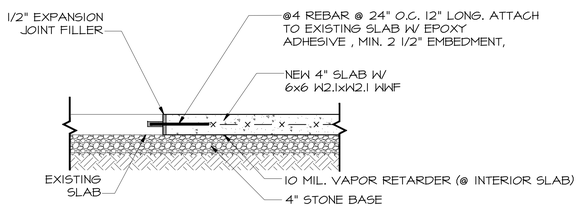

PATCH SLAB TIE IN DETAIL

SCALE: 1"=1'-0"

6 | A3 | A5 | A6.1

REV	DATE	DESCRIPTION	DRAWN	APPR'D
B	01JUL10	ISSUED FOR BID	SJL	CDS
A	11MAY10	ISSUED FOR REVIEW	SJL	CDS

AIR MOBILITY COMMAND
DOVER AIR FORCE BASE, DELAWARE

TITLE: REPAIR RESERVE HEADQUARTERS FACILITY 202

SUBMITTED	APPROVED	APPROVED
CHIEF ENGINEER	CHIEF ENGINEER	COMMANDER

DATE:	PROJECT #:	PLOT SCALE:	DRAWN BY:	DESIGNED BY:
4-30-10	049002	AS NOTED	M. BAUMAN	M. WHEEDLETON

DETAILS

W-4497

SHT 18 OF 57

A6.1

ROOM FINISH SCHEDULE

NO	NAME	FLOOR	BASE	Walls N	Walls S	Walls E	Walls W	CLG	HT	Notes
100	VESTIBULE	VCT	VB-1	PT-4	PT-4	PT-4	PT-4	SAT-1	8'-0"	
101	RECEPTION AREA	CPT-1	WOOD	PT-2/PT-3	PT-2/PT-3	PT-2/PT-3	PT-2/PT-3	SAT-2	8'-6"	4
102	KITCHEN	VCT	VB-2	PT-2	PT-2	PT-2	PT-2	SAT-1	8'-0"	
103	WING COMMAND CHIEF	CPT-1	WOOD	PT-2	PT-2	PT-2	PT-2	SAT-2	8'-6"	
104	WING VICE COMMANDER	CPT-1	WOOD	PT-2	PT-2	PT-2	PT-2	SAT-2	8'-6"	
105	WING COMMANDER	CPT-1	WOOD	PT-2/PT-3	PT-2/PT-3	PT-2/PT-3	PT-2/PT-3	SAT-2	8'-6"	4
106	WING EXECUTIVE OFFICER	CPT-1	WOOD	PT-2	PT-2	PT-2	PT-2	SAT-2	8'-6"	
107	CORRIDOR 1	CPT-1/CT-1	WOOD	PT-2	PT-2	PT-2	PT-2	SAT-2	8'-6"	3,4
108	WING PERFORMANCE PLANNER	CPT-1	WOOD	PT-2	PT-2	PT-2	PT-2	SAT-2	8'-6"	
109	TOILET	CT-1	CT-1	PT-2	PT-2	PT-2	PT-2	PT-1	EXISTING	2
110	STORAGE	CPT-1	VB-1	PT-4	PT-4	PT-4	PT-4	SAT-1	8'-6"	
111	CORRIDOR 2	VCT	VB-1	PT-4	PT-4	PT-4	PT-4	SAT-1	8'-0"	
112	CONFERENCE	CPT-1	VB-1	PT-4	PT-4	PT-4	PT-4	SAT-1	8'-6"	4
113	MPF	CPT-2	VB-1	PT-4	PT-4	PT-4	PT-4	SAT-1	8'-6"	
114	MPF	CPT-2	VB-1	PT-4	PT-4	PT-4	PT-4	SAT-1	8'-6"	
115	MPF	CPT-2	VB-1	PT-4	PT-4	PT-4	PT-4	SAT-1	8'-6"	
116	MPF	CPT-2	VB-1	PT-4	PT-4	PT-4	PT-4	SAT-1	8'-6"	
117	MPF	CPT-2	VB-1	PT-4	PT-4	PT-4	PT-4	SAT-1	8'-6"	
118	MPF	CPT-2	VB-1	PT-4	PT-4	PT-4	PT-4	SAT-1	8'-6"	
119	MPF	CPT-2	VB-1	PT-4	PT-4	PT-4	PT-4	SAT-1	8'-6"	
120	MPF	CPT-2	VB-1	PT-4	PT-4	PT-4	PT-4	SAT-1	8'-6"	
120A	CAREER ASSIST. ADVISOR	CPT-2	VB-1	PT-4	PT-4	PT-4	PT-4	SAT-1	8'-6"	
121	MPF	CPT-2	VB-1	PT-4	PT-4	PT-4	PT-4	SAT-1	8'-6"	
122	MPF	CPT-2	VB-1	PT-4	PT-4	PT-4	PT-4	SAT-1	8'-6"	
123	CORRIDOR 3	VCT	VB-1	PT-4	PT-4	PT-4	PT-4	SAT-1	8'-0"	
124	MEETING ROOM	CPT-1	VB-1	PT-4	PT-4	PT-4	PT-4	SAT-1	9'-0"	
125	PROJECTION	CPT-1	VB-1	PT-4	PT-4	PT-4	PT-4	SAT-1	8'-6"	
126	COPY/FAX	VCT	VB-1	PT-4	PT-4	PT-4	PT-4	SAT-1	8'-0"	
127	CORRIDOR 4	VCT	VB-1	PT-4	PT-4	PT-4	PT-4	SAT-1	8'-0"	
128	MAIL ROOM	VCT	VB-1	PT-4	PT-4	PT-4	PT-4	SAT-1	8'-6"	
129	SCO	CPT-2	VB-1	PT-4	PT-4	PT-4	PT-4	SAT-1	8'-6"	
130	SCO	CPT-2	VB-1	PT-4	PT-4	PT-4	PT-4	SAT-1	8'-6"	
130A	SCO	CPT-2	VB-1	PT-4	PT-4	PT-4	PT-4	SAT-1	8'-6"	
131	SCO	CPT-2	VB-1	PT-4	PT-4	PT-4	PT-4	SAT-1	8'-6"	
132	STORAGE	VCT	VB-1	PT-4	PT-4	PT-4	PT-4	SAT-1	8'-6"	
133	STAIR 2	VCT	VB-1	PT-4	PT-4	PT-4	PT-4	--	--	
134	VESTIBULE	VCT	VB-1	PT-4	PT-4	PT-4	PT-4	SAT-1	8'-0"	
135	STAIR 1	VCT	VB-1	PT-4	PT-4	PT-4	PT-4	PT-1	EXISTING	
136	CORRIDOR 5	VCT	VB-1	PT-4	PT-4	PT-4	PT-4	SAT-1	8'-0"	
137	CST	CPT-2	VB-1	PT-4	PT-4	PT-4	PT-4	SAT-1	8'-6"	
138	SCOS	CPT-2	VB-1	PT-4	PT-4	PT-4	PT-4	SAT-1	8'-6"	
139	PSM	CPT-2	VB-1	PT-4	PT-4	PT-4	PT-4	SAT-1	8'-6"	
140	PRU	CPT-2	VB-1	PT-4	PT-4	PT-4	PT-4	SAT-1	8'-6"	
141	CLASSIFIED ROOM	CPT-2	VB-1	PT-4	PT-4	PT-4	PT-4	SAT-1	8'-6"	
142	SERVER	VCT	VB-1	PT-4	PT-4	PT-4	PT-4	SAT-1	8'-6"	
143	MECHANICAL ROOM 2	CONC	VB-1	PT-4	PT-4	PT-4	PT-4	EXISTING	EXISTING	1
144	COMMUNICATIONS	CONC	VB-1	PT-4	PT-4	PT-4	PT-4	EXISTING	EXISTING	1
145	MACHINE ROOM	CONC	VB-1	PT-4	PT-4	PT-4	PT-4	PT-1	VARIES	1
145A	ELECTRICAL ROOM	CONC	VB-1	PT-4	PT-4	PT-4	PT-4	PT-1	VARIES	1
146	ELEVATOR LOBBY	VCT	VB-1	PT-4	PT-4	PT-4	PT-4	SAT-1	8'-6"	
147	CORRIDOR 6	VCT	VB-1	PT-4	PT-4	PT-4	PT-4	SAT-1	8'-0"	
148	FINANCIAL MANAGER	CPT-2	VB-1	PT-4	PT-4	PT-4	PT-4	SAT-1	8'-6"	
149	FINANCIAL MANAGER	CPT-2	VB-1	PT-4	PT-4	PT-4	PT-4	SAT-1	8'-6"	
150	FINANCIAL MANAGER	CPT-2	VB-1	PT-4	PT-4	PT-4	PT-4	SAT-1	8'-6"	
151	VESTIBULE	VCT	VB-1	PT-4	PT-4	PT-4	PT-4	SAT-1	8'-0"	
152	MILITARY PAY	CPT-2	VB-1	PT-4	PT-4	PT-4	PT-4	SAT-1	8'-6"	
153	MECHANICAL ROOM 1	CONC	VB-1	PT-4	PT-4	PT-4	PT-4	EXISTING	EXISTING	1
154	TRAINING	VCT	VB-1	PT-4	PT-4	PT-4	PT-4	SAT-1	8'-6"	
155	BREAK ROOM	VCT	VB-1	PT-4	PT-4	PT-4	PT-4	SAT-1	8'-6"	
156	CLOSET	VCT	VB-1	PT-4	PT-4	PT-4	PT-4	SAT-1	8'-0"	
157	MENS	CT-2	CT-2	PT-4/CT-2	PT-4/CT-2	PT-4/CT-2	PT-4/CT-2	SAT-1	8'-6"	2
158	WOMENS	CT-2	CT-2	PT-4/CT-2	PT-4/CT-2	PT-4/CT-2	PT-4/CT-2	SAT-1	8'-6"	2
200	STAIR 2	VCT	VB-1	PT-4	PT-4	PT-4	PT-4	PT-1	VARIES	
201	CORRIDOR 7	VCT	VB-1	PT-4	PT-4	PT-4	PT-4	SAT-1	8'-0"	
202	PUBLIC AFFAIRS	CPT-2	VB-1	PT-4	PT-4	PT-4	PT-4	SAT-1	8'-6"	
203	OFFICE	CPT-2	VB-1	PT-4	PT-4	PT-4	PT-4	SAT-1	8'-6"	
204	STORAGE	VCT	VB-1	PT-4	PT-4	PT-4	PT-4	SAT-1	8'-6"	
205	OFFICE	CPT-2	VB-1	PT-4	PT-4	PT-4	PT-4	SAT-1	8'-6"	
206	EDUCATION/TRAINING	CPT-2	VB-1	PT-4	PT-4	PT-4	PT-4	SAT-1	8'-6"	
208	STORAGE	VCT	VB-1	PT-4	PT-4	PT-4	PT-4	SAT-1	8'-6"	
209	STAIR 1	VCT	VB-1	PT-4	PT-4	PT-4	PT-4	PT-1	EXISTING	
210	JANITOR CLOSET	VCT	VB-1	PT-4	PT-4	PT-4	PT-4	PT-1	EXISTING	
211	MENS	CT-2	CT-2	PT-4/CT-2	PT-4/CT-2	PT-4/CT-2	PT-4/CT-2	PT-1	EXISTING	2
212	WOMENS	CT-2	CT-2	PT-4/CT-2	PT-4/CT-2	PT-4/CT-2	PT-4/CT-2	PT-1	EXISTING	2
213	WING TRAINING/ TESTING	CPT-2	VB-1	PT-4	PT-4	PT-4	PT-4	SAT-1	8'-6"	
214	WING TRAINING EDUCATION	CPT-2	VB-1	PT-4	PT-4	PT-4	PT-4	SAT-1	8'-6"	
215	OFFICE	CPT-2	VB-1	PT-4	PT-4	PT-4	PT-4	SAT-1	8'-6"	
216	ELEVATOR LOBBY	VCT	VB-1	PT-4	PT-4	PT-4	PT-4	SAT-1	8'-6"	

FINISH SCHEDULE NOTES:
1. CONC. SHALL BE SEALED.
2. CERAMIC WALL TILE SHALL BE 48" A.F.F.
3. SEE PLAN FOR CT EXTENTS.
4. PROVIDE CHAIR RAIL @ 36" AFF - PT'D PURE WHITE. WALL BELOW CHAIR RAIL SHALL BE PAINTED PT-3.

ABBREVIATION LEGEND

VCT	VINYL COMPOSITION TILE
VB-X	VINYL BASE
CPT-X	CARPET (CARPET DELINIATION-SEE SPECIFICATION SECTION 09 06 90 - COLOR SCHEDULE)
CT-X	CERAMIC TILE
CONC.	CONCRETE FINISH
PT-X	PAINT TYPE 1 (PAINT DELINIATION-SEE SPECIFICATION SECTION 09 06 90 - COLOR SCHEDULE)
SAT-X	SUSPENDED ACOUSTICAL TILE (SAT DELINIATION-SEE SPECIFICATION SECTION 09 06 90 - COLOR SCHEDULE)

FINISH SCHEDULE
NTS

DOOR SCHEDULE

Number	Door Type	Door Mat	Size W	Size H	Size TH	Frame Type	Frame Mat	Details Sill	Details Jamb	Details Head	Remarks Label	Remarks Hdw Set	Remarks Note
100A	C	ALUM	6'-0"	7'-0"	1 3/4"	--	EXISTING	4	--	--	--	1	2
100B	C	ALUM	6'-0"	7'-0"	1 3/4"	1	HM	---	2	2	--	1	2
102	A	WD	3'-0"	6'-8"	1 3/4"	1	HM	3	2	2	--	8	
107	E	HM	3'-0"	7'-0"	1 3/4"	--	EXISTING	5	--	--	--	9	1
112	A	WD	3'-0"	7'-0"	1 3/4"	--	HM	3	3	3	--	8	
113	G	WD	3'-0"	7'-0"	1 3/4"	--	EXISTING	3	3	3	--	7	
114	G	WD	3'-0"	7'-0"	1 3/4"	--	EXISTING	3	3	3	--	7	
115	G	WD	3'-0"	7'-0"	1 3/4"	--	EXISTING	3	3	3	--	7	
116	A	WD	3'-0"	7'-0"	1 3/4"	1	HM	--	2	2	--	3	
117	G	WD	3'-0"	7'-0"	1 3/4"	--	EXISTING	3	3	3	--	7	
118	G	WD	3'-0"	7'-0"	1 3/4"	--	EXISTING	3	3	3	--	7	
119	G	WD	3'-0"	7'-0"	1 3/4"	--	EXISTING	3	3	3	--	7	
120	B	WD	3'-0"	7'-0"	1 3/4"	--	EXISTING	3	3	3	--	8	
126	A	WD	3'-0"	7'-0"	1 3/4"	--	EXISTING	--	3	3	--	4	
128	A	WD	3'-0"	7'-0"	1 3/4"	1	HM	--	2	2	--	4	
129A	G	WD	3'-0"	7'-0"	1 3/4"	1	HM	3	2	2	--	3	
129B	G	WD	3'-0"	7'-0"	1 3/4"	1	HM	3	2	2	--	3	
130	A	WD	3'-0"	7'-0"	1 3/4"	1	HM	--	2	2	--	3	
130A	A	WD	3'-0"	7'-0"	1 3/4"	1	HM	--	2	2	--	3	
131	A	WD	3'-0"	7'-0"	1 3/4"	1	HM	--	2	2	--	3	
132	A	WD	3'-0"	7'-0"	1 3/4"	1	HM	3	2	2	--	4	
133	B	HM	3'-0"	7'-0"	1 3/4"	1	HM	4	4	4	--	2	
134	B	HM	3'-0"	7'-0"	1 3/4"	--	EXISTING	4	4	4	--	2	
139	G	WD	3'-0"	7'-0"	1 3/4"	--	EXISTING	3	3	3	--	3	
140	A	WD	3'-0"	7'-0"	1 3/4"	1	HM	--	2	2	--	3	
141	A	WD	3'-0"	7'-0"	1 3/4"	1	HM	--	2	2	--	4	
143	F	ST	6'-0"	7'-0"	1 3/4"	--	EXISTING	--	5	5	--	6	
144	A	ST	3'-0"	7'-0"	1 3/4"	--	EXISTING	--	5	5	--	6	
145A	A	ST	3'-0"	7'-0"	1 3/4"	1	HM	6	5	5	--	6	
145B	A	HM	3'-0"	7'-0"	1 3/4"	1	HM	6	5	5	--	6	
148A	G	WD	3'-0"	7'-0"	1 3/4"	--	EXISTING	3	3	3	--	7	
148B	G	WD	3'-0"	7'-0"	1 3/4"	--	EXISTING	3	3	3	--	7	
151A	B	HM	3'-0"	7'-0"	1 3/4"	1	HM	--	2	2	--	5	
151B	B	HM	3'-0"	7'-0"	1 3/4"	--	EXISTING	4	1	1	--	2	
152	G	WD	3'-0"	6'-8"	1 3/4"	--	EXISTING	--	2	2	--	7	
153	D	ST	5'-0"	7'-0"	1 3/4"	--	EXISTING	--	5	5	--	6	
154	A	WD	3'-0"	7'-0"	1 3/4"	--	HM	3	6	6	--	4	
157	A	HM	3'-0"	7'-0"	1 3/4"	1	HM	1	3	3	--	5	
158	A	HM	3'-0"	7'-0"	1 3/4"	1	HM	1	3	3	--	5	
200	B	HM	3'-0"	7'-0"	1 3/4"	1	HM	--	7	7	--	5	
202	G	WD	3'-0"	7'-0"	1 3/4"	--	EXISTING	--	--	--	20 MIN.	3	
203	A	WD	3'-0"	7'-0"	1 3/4"	1	HM	--	2	2	--	3	
204	A	HM	3'-0"	7'-0"	1 3/4"	1	HM	3	2	2	20 MIN.	4	
205	A	WD	3'-0"	7'-0"	1 3/4"	1	HM	--	2	2	20 MIN.	3	
206	G	WD	3'-0"	7'-0"	1 3/4"	1	HM	--	2	2	20 MIN.	8	
208	A	WD	3'-0"	7'-0"	1 3/4"	1	HM	3	2	2	--	4	
213A	G	WD	3'-0"	7'-0"	1 3/4"	1	HM	3	2	2	20 MIN.	8	
213B	G	WD	3'-0"	7'-0"	1 3/4"	1	HM	3	2	2	20 MIN.	8	
214	G	WD	3'-0"	7'-0"	1 3/4"	--	EXISTING	3	--	--	20 MIN.	7	

GENERAL DOOR SCHEDULE NOTES:
1. CONTRACTOR SHALL COORDINATE NEW DOOR SIZES TO BE INSTALLED IN EXISTING FRAMES.
2. ALL DOOR HARDWARE SHALL BE ADA COMPLIANT.
3. ALL NEW HM FRAMES SHALL BE 5 3/4" WIDE, U.N.O.

DOOR SCHEDULE NOTES:
1. DOOR SHALL BE EQUIPPED W/ ELECTRONIC CARD READER & ASSOCIATED HARDWARE & WIRING.
2. DOORS SHALL BE EQUIPPED W/ AUTOMATIC EYE OPENING DEVICE.

DOOR SCHEDULE
NTS

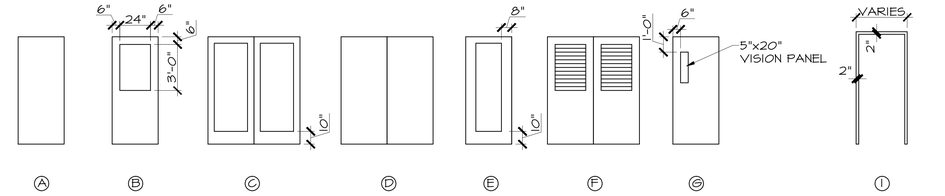

DOOR TYPES
NTS

FRAME TYPES
NTS

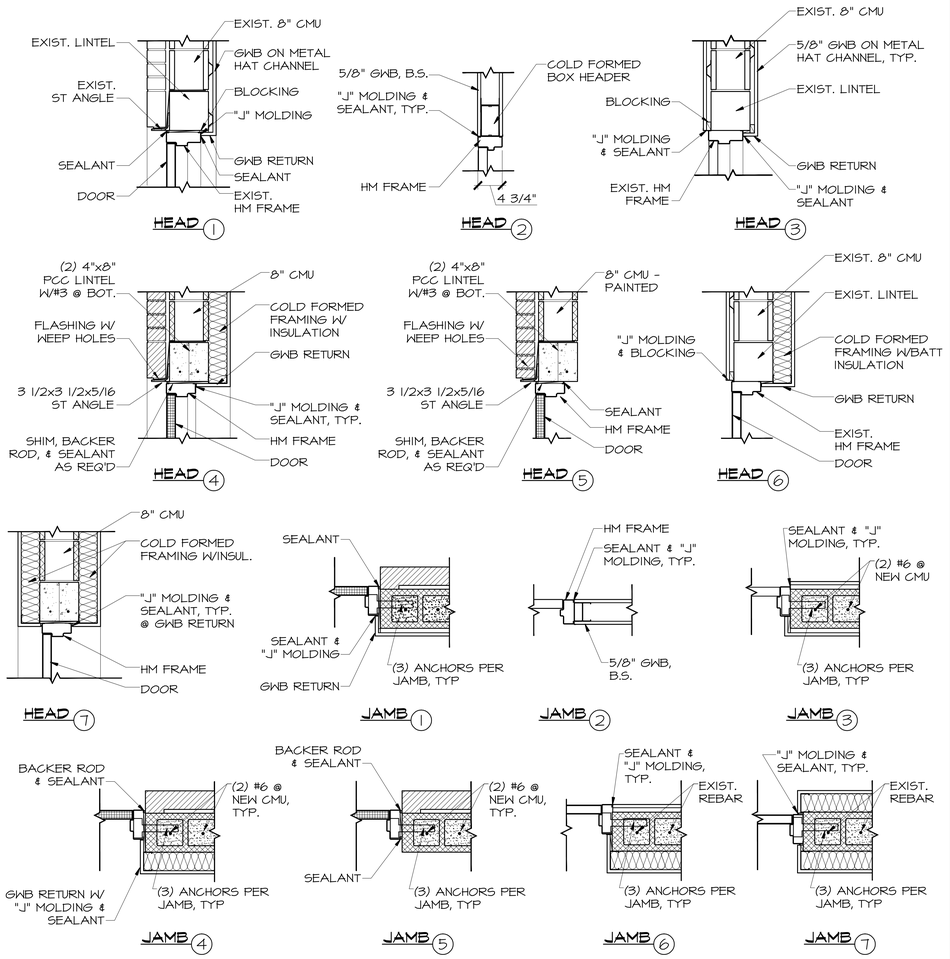

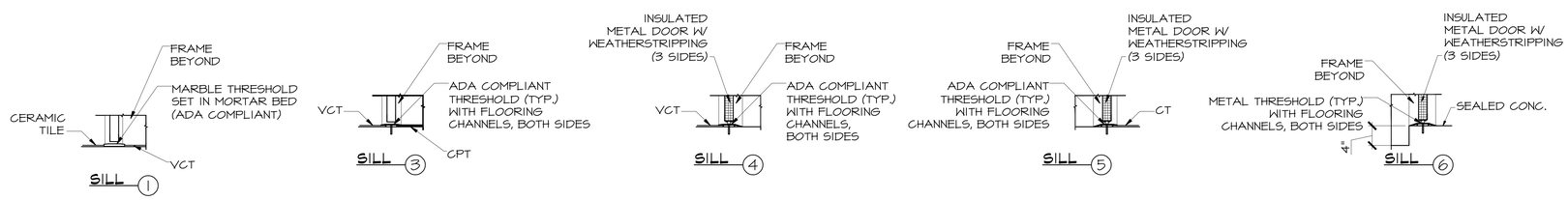

DOOR DETAILS
NTS

REV	DATE	DESCRIPTION	DRAWN	APPR'D
B	01JUL10	ISSUED FOR BID	SJL	CDS
A	11MAY10	ISSUED FOR REVIEW	SJL	CDS

AIR MOBILITY COMMAND
DOVER AIR FORCE BASE, DELAWARE

TITLE: REPAIR RESERVE HEADQUARTERS FACILITY 202

SUBMITTED	APPROVED	APPROVED
CHIEF ENGINEER	CHIEF ENGINEER	COMMANDER

DATE:	PROJECT #:	PLOT SCALE:	DRAWN BY:	DESIGNED BY:
4-30-10	049002	AS NOTED	M. BAUMAN	M. WHEEDLETON

FINISH & DOOR SCHEDULES & DOOR DETAILS

W-4497

SHT 19 OF 57

A7

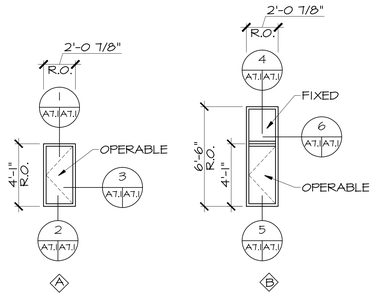

NOTES:
1. CONTRACTOR SHALL COORDINATE NEW WINDOW UNITS W/ EXISTING OPENING.

WINDOW TYPES
1/4"=1'-0"

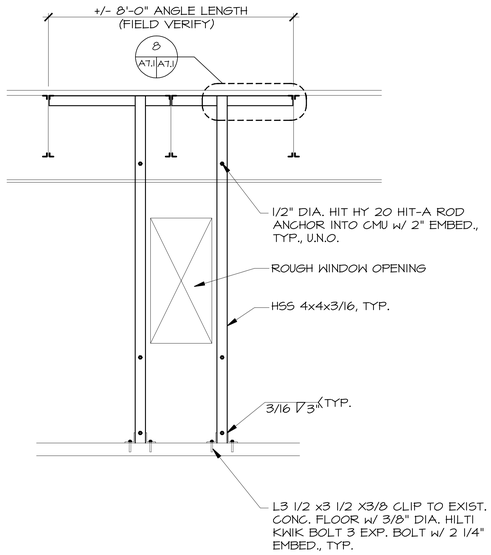

TYP. ELEVATION @ WINDOW TYPE A
1/2"=1'-0"

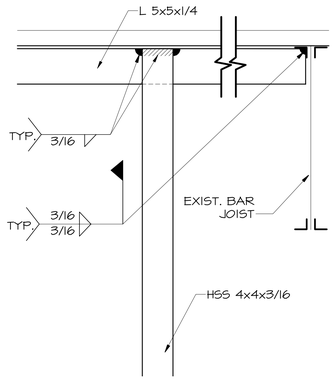

DETAIL @ HSS TOP
1 1/2"=1'-0"
8 A7.1 A7.1

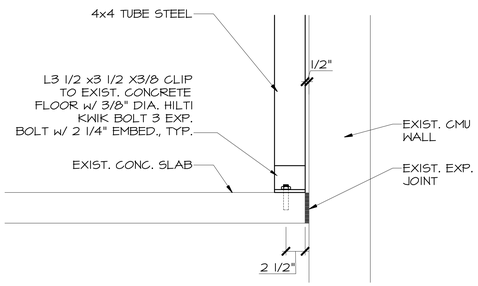

DETAIL @ HSS BOTTOM
1 1/2"=1'-0"
9 A7.1 A7.1

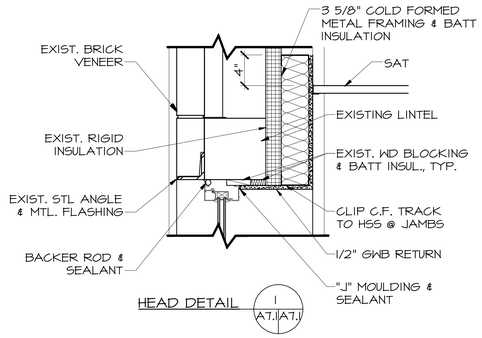

HEAD DETAIL 1 A7.1 A7.1

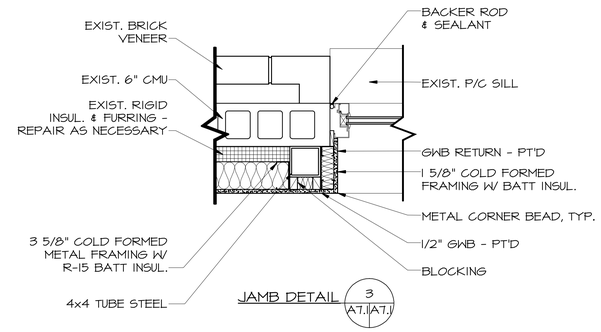

JAMB DETAIL 3 A7.1 A7.1

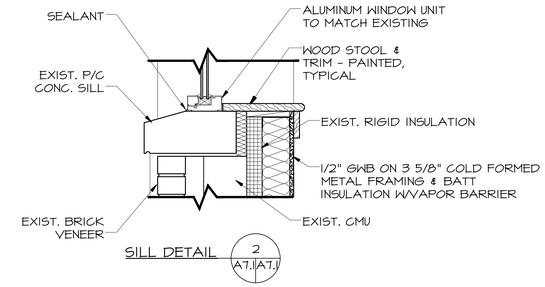

SILL DETAIL 2 A7.1 A7.1

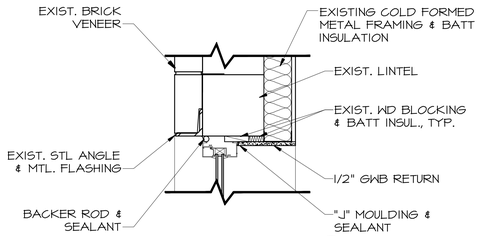

HEAD DETAIL 4 A7.1 A7.1

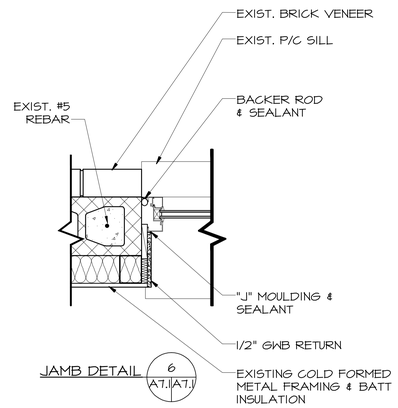

JAMB DETAIL 6 A7.1 A7.1

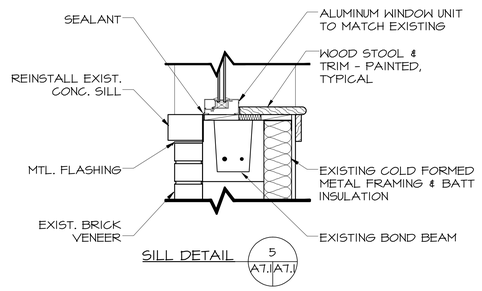

SILL DETAIL 5 A7.1 A7.1

NOTES:
1. CONTRACTOR SHALL REPLACE AND REPAIR ANY GWB AND/OR INSULATION DAMAGED DURING DEMOLITION OF EXISTING WINDOWS OR AS NECESSARY FOR INSTALLATION OF THE NEW UNITS.
2. CONTRACTOR SHALL REPLACE WD BLOCKING & INSULATION AS NECESSARY.

TYP. WINDOW DETAILS
1 1/2"=1'-0"

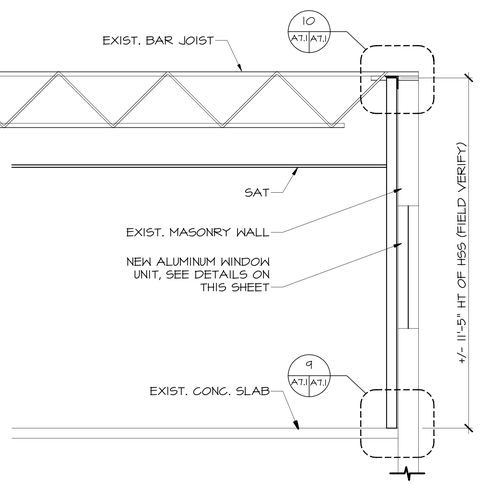

TYP. SECTION @ WINDOW TYPE A
1/2"=1'-0"
7 A7.1 A7.1

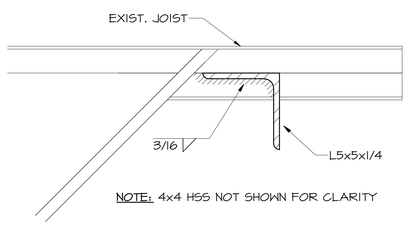

NOTE: 4x4 HSS NOT SHOWN FOR CLARITY

DETAIL @ JOIST CONNECTION
3"=1'-0"
10 A7.1 A7.1

REV	DATE	DESCRIPTION	DRAWN	APPR'D
B	01JUL10	ISSUED FOR BID	SJL	CDS
A	11MAY10	ISSUED FOR REVIEW	SJL	CDS

AIR MOBILITY COMMAND
DOVER AIR FORCE BASE, DELAWARE

TITLE: REPAIR RESERVE HEADQUARTERS FACILITY 202

SUBMITTED	APPROVED	APPROVED
CHIEF ENGINEER	CHIEF ENGINEER	COMMANDER

DATE:	PROJECT #:	PLOT SCALE:	DRAWN BY:	DESIGNED BY:
4-30-10	049002	AS NOTED	M. BAUMAN	M. WHEEDLETON

WINDOW DETAILS

W-4497

SHT 18 OF 57

A7.1

GENERAL

1. GENERAL NOTES, SYMBOLS LIST, AND DETAILS ARE APPLICABLE TO ALL MECHANICAL DRAWINGS LABELED "M".
2. THE CONTRACTOR IS RESPONSIBLE FOR ALL WORK, MATERIALS, AND LABOR TO PROVIDE COMPLETE AND WORKING SYSTEMS WHETHER SPECIFIED OR IMPLIED.
3. THE ENTIRE MECHANICAL INSTALLATION SHALL CONFORM TO THE LOCAL CODE, STATE LAWS, AGA, IBC, NBFU, NFPA, NSPC, ASME, AND ALL OTHER GOVERNING AUTHORITIES.
4. THE CONTRACTOR SHALL SECURE AND PAY FOR ALL PERMITS, FEES, INSPECTIONS, AND APPROVALS AS REQUIRED.
5. DO NOT SCALE THE DRAWINGS FOR EXACT DIMENSIONS. VERIFY ALL FIGURES, CONDITIONS, DIMENSIONS, ETC. AT THE JOBSITE.
6. CONTRACTOR SHALL GUARANTEE THE COMPLETE INSTALLATION AGAINST DEFECTS IN THE WORKMANSHIP AND MATERIALS FOR A PERIOD OF (1) YEAR FROM THE DATE OF FINAL ACCEPTANCE. THIS GUARANTEE SHALL BE BINDING REGARDLESS OF THE MANUFACTURER'S GUARANTEE AND THE CONTRACTOR SHALL REPAIR AND/OR REPLACE ALL DEFECTIVE MATERIAL AND PARTS REGARDLESS OF CAUSE (EXCLUDING DEFECTS TRACEABLE TO IMPROPER MAINTENANCE OR MALICIOUS DESTRUCTION OR ACTS OF GOD) AFTER THE SYSTEM HAS BEEN ACCEPTED BY THE OWNER.
7. THE CONTRACTOR SHALL COORDINATE WITH ALL OTHER TRADES TO PREVENT INTERFERENCE BETWEEN BEAMS, STRUCTURES, PIPING, LIGHTING FIXTURES, ETC.
8. ALL MECHANICAL EQUIPMENT SHALL BE LOCATED AT A MINIMUM FLOOR ELEVATION 12" ABOVE THE PROJECTED FLOOD PLAN ELEVATION. PROVIDE ALL NECESSARY STRUCTURES.
9. ALL MATERIALS USED IN CONSTRUCTION SHALL HAVE A FLAME SPREAD RATING OF 25 OR LESS. A SMOKE DEVELOPMENT RATING OF 50 OR LESS, AND A FUEL CONTRIBUTED RATING OF 25 OR LESS. ALL MATERIALS SHALL BE "SELF EXTINGUISHING".
10. ALL PIPING, CONDUIT, AND DUCT PENETRATIONS OF "FIRE RATED BUILDING CONSTRUCTION" SHALL BE SLEEVED AND SEALED WITH A FIRE BARRIER MATERIAL EQUAL TO 3M "PENETRATION SEALING SYSTEMS". REFER TO ARCHITECTURAL DRAWINGS FOR FIRE RATINGS OF BUILDING CONSTRUCTION.
11. INSTALL ALL EQUIPMENT IN ACCORDANCE WITH MANUFACTURER'S WRITTEN RECOMMENDATIONS.
12. CONTRACTOR SHALL PROVIDE THREE (3) COMPLETE SETS OF BOUND OPERATING AND MAINTENANCE INSTRUCTIONS. CONTRACTOR SHALL INSTRUCT THE OWNER OR THEIR AGENT WITH REGARD TO THE PROPER USE OF THE SYSTEM UNTIL SUCH INSTRUCTION IS COMPLETE TO THE OWNER'S SATISFACTION. OPERATION AND MAINTENANCE MANUAL SHALL INCLUDE A VALVE SCHEDULE IF VALVES ARE INSTALLED AS PART OF THE NEW WORK.
13. MECHANICAL CONTRACTOR SHALL LABEL ALL NEW EQUIPMENT, PIPING, AND VALVES (INDOORS AND OUTDOORS) IN A PERMANENT MANNER. MECHANICAL PIPING SHALL BE LABELED WITH SELF-ADHESIVE PIPE MARKERS EQUAL TO MARKING SERVICES INC. (MSI) SERIES MS-9000 MARKERS. COMPLY WITH ASME A13.1 FOR LETTERING SIZE, LENGTH OF COLOR FIELD, COLORS, AND VIEWING ANGLES OF IDENTIFICATION. DIRECTION OF FLOW SHALL BE IDENTIFIED WITH MS-9000 FLOW DIRECTIONAL ARROW TAPE. VALVES SHALL BE IDENTIFIED WITH BRASS VALVE TAGS, ATTACHED WITH SOLID BRASS CHAINS AND "S" HOOKS. VALVE TAGS SHALL BE COORDINATED WITH VALVE SCHEDULE PROVIDED IN OPERATION AND MAINTENANCE MANUAL. MECHANICAL EQUIPMENT SHALL BE LABELED WITH ENGRAVED PLASTIC TAGS WITH MOUNTING HOLES AND STAINLESS STEEL SCREWS. ALL LABELING SHALL HAVE HIGH CONTRAST BETWEEN LETTER AND BACKGROUND COLORS AND SHALL BE LOCATED FOR EASY VISIBILITY.
14. ALL MECHANICAL EQUIPMENT AND APPLIANCES INSTALLED SHALL BEAR THE LABEL OF AN APPROVED AGENCY.
15. THE ENTIRE MECHANICAL INSTALLATION SHALL BE MADE IN ACCORDANCE WITH THE 2006 INTERNATIONAL MECHANICAL CODE (CURRENT SUPPLEMENTS).
16. PROVIDE VIBRATION ISOLATION MOUNTINGS FOR ALL MOTOR OPERATED EQUIPMENT AND AS RECOMMENDED BY THE MANUFACTURER.
17. ALL EXTERIOR WALL OPENINGS SHALL BE SLEEVED, PROPERLY CAULKED, AND SEALED WITH AN HIGH QUALITY SEALANT TO PREVENT INFILTRATION OF MOISTURE AND OUTSIDE AIR.
18. MECHANICAL CONTRACTOR SHALL COORDINATE WITH ELECTRICAL CONTRACTOR WHO SHALL PROVIDE POWER WIRING TO ALL MECHANICAL EQUIPMENT. MECHANICAL CONTRACTOR SHALL FURNISH LOOSE MOTOR STARTERS AND DISCONNECT SWITCHES FOR INSTALLATION AND WIRING BY THE ELECTRICAL CONTRACTOR. MECHANICAL CONTRACTOR SHALL PROVIDE ALL CONTROL AND INTERLOCK WIRING AND ALL THERMOSTATS AND ACCESSORIES.
19. PROVIDE BALANCING OF ALL AIR SYSTEMS PER AABC OR NEBB STANDARDS. SUBMIT TEST DATA AND DEMONSTRATE IN FIELD. INCLUDE SOUND TESTING AS MAY BE REQUIRED.
20. PROVIDE BALANCING OF ALL WATER SYSTEMS PER AABC OR NEBB STANDARDS. SUBMIT TEST DATA AND DEMONSTRATE IN FIELD.
21. SUBMIT 3/8" SCALE SHOP DRAWING FOR APPROVAL PRIOR TO FABRICATION. COORDINATE WITH ALL TRADES.
22. SUBMIT TO THE ARCHITECT FOR APPROVAL, DUPLICATE SPECIFICATION SHEETS OF ALL EQUIPMENT SUPPLIED OR INSTALLED, INCLUDING BUT NOT LIMITED TO THE FOLLOWING:

    A. AIR HANDLING UNITS
    B. VAV TERMINAL BOXES
    C. CHILLERS
    C. DIFFUSERS, GRILLES, & REGISTERS
    D. DUCTLESS SPLIT SYSTEMS
    E. EXHAUST FANS
    F. EXPANSION TANKS
    G. AIR SEPARATORS
    H. MOTOR OPERATED DAMPERS
    I. PUMPS
    J. PTAC UNITS
    K. UNIT HEATERS
    L. DOMESTIC HOT WATER HEATERS
    M. PLUMBING FIXTURES
    N. AUTOMATIC CONTROLS

GENERAL ABBREVIATIONS:

ABV	ABOVE
AFF	ABOVE FINISHED FLOOR
AFR	ABOVE FINISHED ROOF
COND.	CONDENSATE
CONT	CONTINUATION
CFM	CUBIC FEET/MINUTE
(D)	DEMO
DIA	DIAMETER
DN	DOWN
DWG	DRAWING
(E)	EXISTING
(ER)	EXISTING RELOCATED
(ETR)	EXISTING TO REMAIN
EXH.	EXHAUST
HWR	HOT WATER RETURN
HWS	HOT WATER SUPPLY
(N)	NEW
NIC	NOT IN CONTRACT
OA	OUTSIDE AIR
(R)	REMOVE
RD	RELIEF DAMPER
(RE)	RELOCATE EXISTING
SAN	SANITARY
TYP	TYPICAL
V	VENT

PIPING LEGEND

	REDUCER
	BALL VALVE
	GATE VALVE
	CHECK VALVE
	BUTTERFLY VALVE
	BALANCING VALVE
	UNION
	CONTROL VALVE
	3-WAY CONTROL VALVE (MIXING TYPE)
	RELIEF VALVE
	BACKFLOW PREVENTER
	THERMOMETER AND PIPE WELL
P.G.	PRESSURE GAUGE
	CAP
	PIPE TO BE REMOVED
	DIRECTION OF FLOW
	POINT OF CONNECTION NEW TO EXISTING
	POINT OF DISCONNECTION
	ELBOW TURNED UP
	ELBOW TURNED DOWN
(NAME)	EXISTING PIPING TO REMAIN
(NAME)	NEW PIPING (SERVICES AS INDICATED)
FD	FLOOR DRAIN
	SHUTOFF VALVE IN VERTICAL
	PIPE CAP IN VERTICAL
	PIPE TO BE REMOVED
	SANITARY PIPING
	VENT PIPING
	DOMESTIC COLD WATER
	DOMESTIC HOT WATER

HVAC LEGEND:

	EXISTING DUCTWORK TO REMAIN
	NEW DUCTWORK
	DUCTWORK TO BE REMOVED
	NEW FLEX DUCT (MAX. LENGTH 6'-0")
	TURNING VANES
	SPIN COLLAR WITH VOLUME DAMPER
	RECTANGULAR BRANCH WITH VOLUME DAMPER
	DUCT TRANSITION
T	TEMPERATURE SENSOR OR THERMOSTAT.
200	2'-0" x 2'-0" SUPPLY AIR DIFFUSER, 200 CFM SHADE AREA INDICATES BLANK-OFF SECTIONS
1000	RETURN AIR GRILLE 1000 CFM
	POINT OF CONNECTION NEW TO EXISTING
	POINT OF DISCONNECTION
	DEVICE TO BE REMOVED

REV	DATE	DESCRIPTION	DRAWN	APPRD
B	01JUL10	ISSUED FOR BID	SJL	CDS
A	11MAY10	ISSUED FOR REVIEW	SJL	CDS

AIR MOBILITY COMMAND
DOVER AIR FORCE BASE, DELAWARE

TITLE: REPAIR RESERVE HEADQUARTERS FACILITY 202

SUBMITTED	APPROVED	APPROVED
CHIEF ENGINEER	CHIEF ENGINEER	COMMANDER

DATE:	PROJECT #:	PLOT SCALE:	DRAWN BY:	DESIGNED BY:
4-30-10	049002	AS NOTED	WWR	JRF

MECHANICAL & PLUMBING NOTES & LEGENDS

W-4497

SHT 21 OF 57

MP0

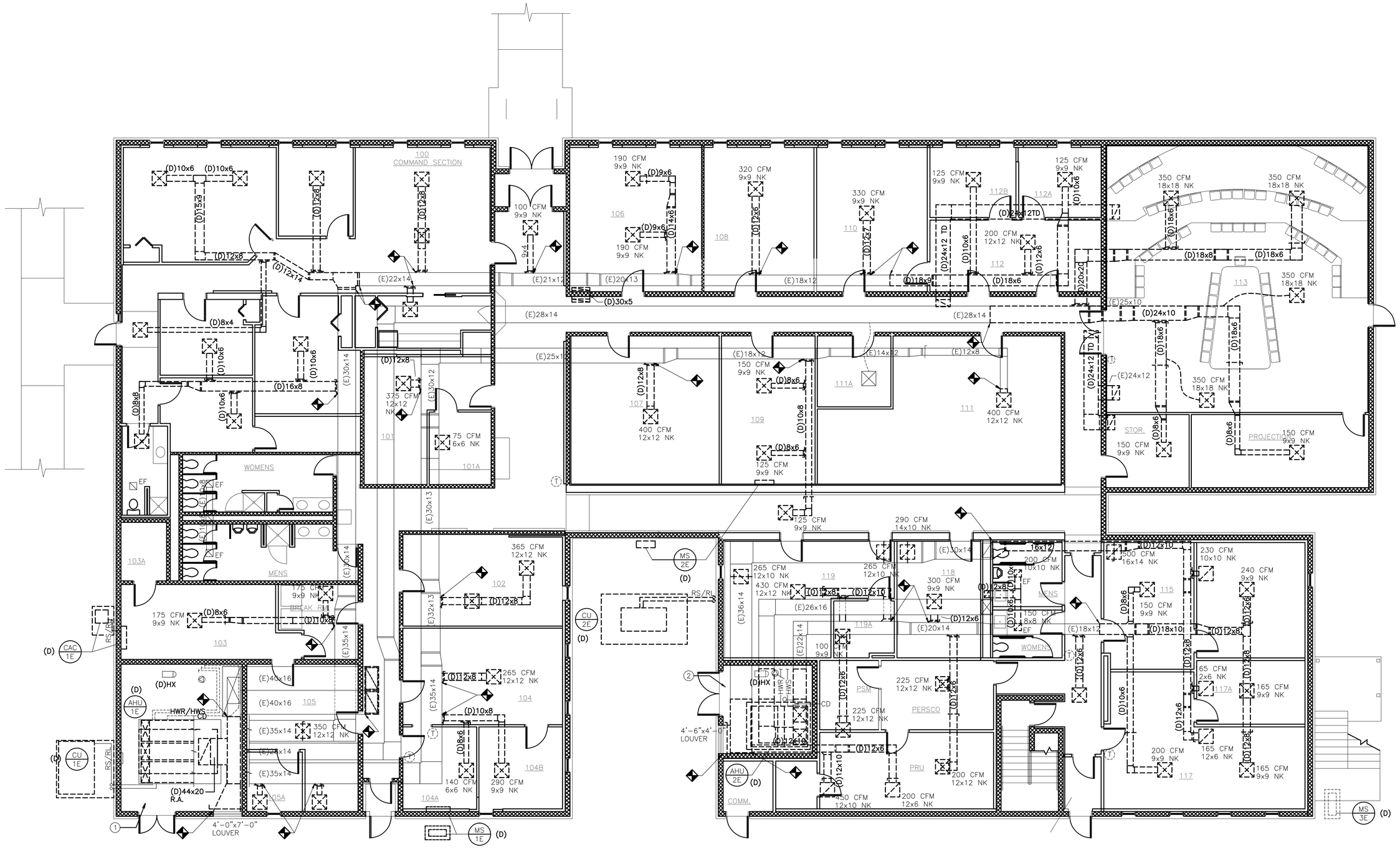

1ST FLOOR – MECHANICAL DEMOLITION PLAN

SCALE 3/16"=1'-0"

DEMOLITION NOTES:

1. MECH. ROOM 153 DEMOLITION:
REMOVE AHU-1 AND ASSOCIATED CONDENSING UNIT AND REFRIGERANT PIPING. REMOVE DUCTWORK AS INDICATED. REMOVE COIL CONDENSATE PIPING. REMOVE HOT WATER PIPING BACK TO HEAT EXCHANGER. REMOVE HOT WATER PUMP. REMOVE AIR SEPARATOR AND EXPANSION TANK. REMOVE HEAT EXCHANGER. CAP STEAM AND CONDENSATE PIPING FOR FUTURE CONNECTION. COORDINATE EXTENT OF DEMOLITION WITH NEW WORK PLANS ON DWG. M4.

2. MECH. ROOM 143 DEMOLITION:
REMOVE AHU-2 AND ASSOCIATED CONDENSING UNIT AND REFRIGERANT PIPING. REMOVE DUCTWORK AS INDICATED. REMOVE COIL CONDENSATE PIPING. REMOVE HOT WATER PIPING BACK TO HEAT EXCHANGER AND CAP. REMOVE HOT WATER PUMP. REMOVE AIR SEPARATOR AND EXPANSION TANK. ABANDON HEAT EXCHANGER IN PLACE. COORDINATE EXTENT OF DEMOLITION WITH NEW WORK PLANS ON DWG. M4.

REV	DATE	DESCRIPTION	DRAWN	APPRD
B	01JUL10	ISSUED FOR BID	SJL	CDS
A	11MAY10	ISSUED FOR REVIEW	SJL	CDS

AIR MOBILITY COMMAND
DOVER AIR FORCE BASE, DELAWARE

TITLE: REPAIR RESERVE HEADQUARTERS FACILITY 202

SUBMITTED	APPROVED	APPROVED
CHIEF ENGINEER	CHIEF ENGINEER	COMMANDER

DATE:	PROJECT #:	PLOT SCALE:	DRAWN BY:	DESIGNED BY:
4-30-10	049002	AS NOTED	DPA	JRF

MECHANICAL DEMOLITION FIRST FLOOR HVAC

W-4497

SHT 22 OF 57

MD1

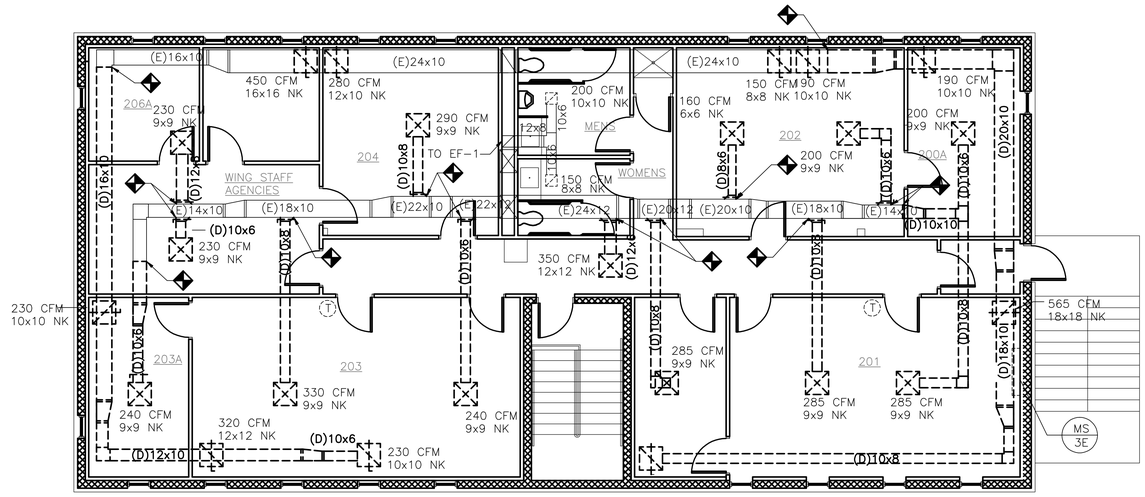

PN

2ND FLOOR – MECHANICAL DEMOLITION PLAN

SCALE 3/16"=1'-0"

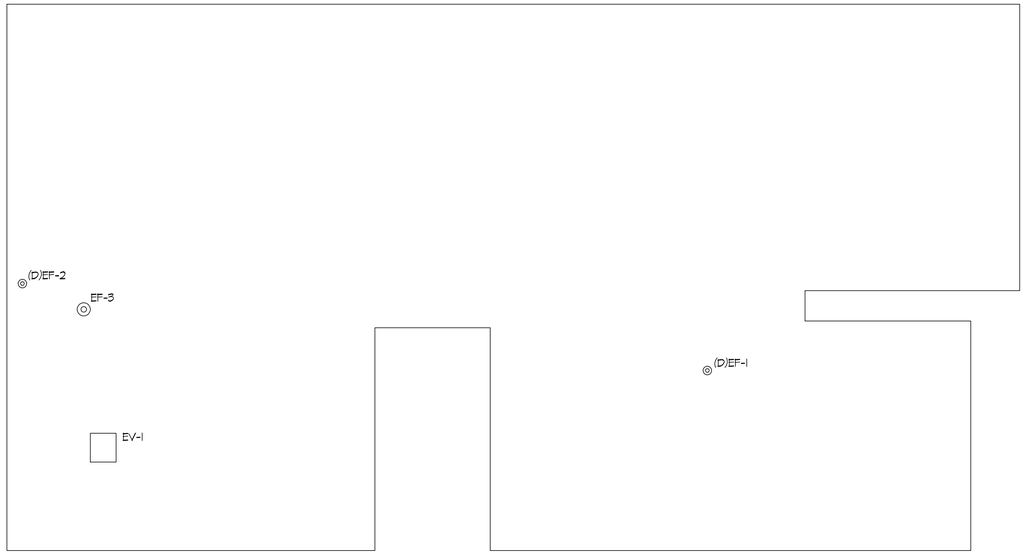

PN

ROOF – MECHANICAL DEMOLITION PLAN

SCALE 3/16"=1'-0"

REV	DATE	DESCRIPTION	DRAWN	APPRD
B	01JUL10	ISSUED FOR BID	SJL	CDS
A	11MAY10	ISSUED FOR REVIEW	SJL	CDS

AIR MOBILITY COMMAND
DOVER AIR FORCE BASE, DELAWARE

TITLE: REPAIR RESERVE HEADQUARTERS FACILITY 202

SUBMITTED	APPROVED	APPROVED
CHIEF ENGINEER	CHIEF ENGINEER	COMMANDER

DATE:	PROJECT #:	PLOT SCALE:	DRAWN BY:	DESIGNED BY:
4-30-10	049002	AS NOTED	DPA	JRF

MECHANICAL DEMOLITION SECOND FLOOR HVAC

W-4497

SHT 23 OF 57

MD2

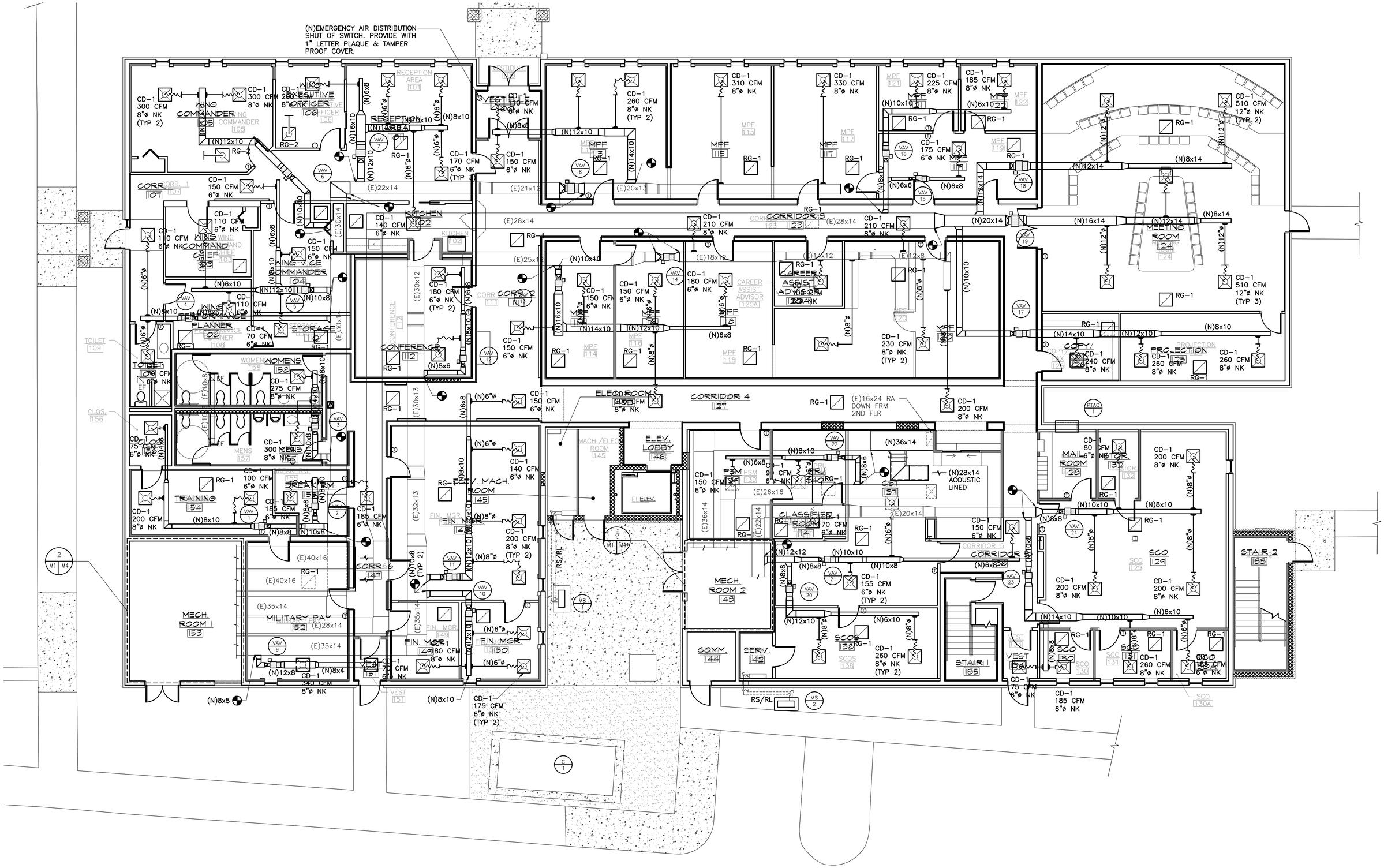

1ST FLOOR – NEW MECHANICAL PLAN

SCALE 3/16"=1'-0"

PN

REV	DATE	DESCRIPTION	DRAWN	APPRD
B	01JUL10	ISSUED FOR BID	SJL	CDS
A	11MAY10	ISSUED FOR REVIEW	SJL	CDS

AIR MOBILITY COMMAND
DOVER AIR FORCE BASE, DELAWARE

TITLE: REPAIR RESERVE HEADQUARTERS FACILITY 202

SUBMITTED	APPROVED	APPROVED
CHIEF ENGINEER	CHIEF ENGINEER	COMMANDER

DATE:	PROJECT #:	PLOT SCALE:	DRAWN BY:	DESIGNED BY:
4-30-10	049002	AS NOTED	DPA	JRF

NEW MECHANICAL FIRST FLOOR HVAC DESIGN

W-4497

SHT 24 OF 57

M1

NOTES:

1) CONTRACTOR SHALL MAINTAIN EXISTING CONDITION OF BATT INSULATION ABOVE 2ND FLOOR CEILING. IF INSULATION MUST BE DISTURBED, CONTRACTOR SHALL BE RESPONSIBLE FOR RESTORATION OR REPLACEMENT.

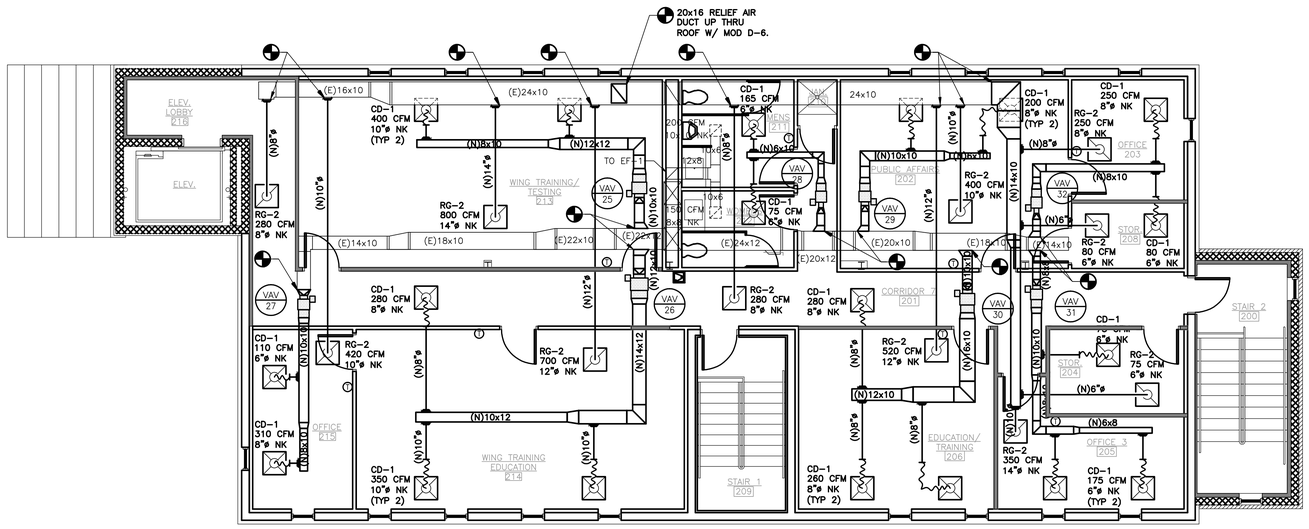

PN

2ND FLOOR - NEW MECHANICAL PLAN

SCALE 3/16"=1'-0"

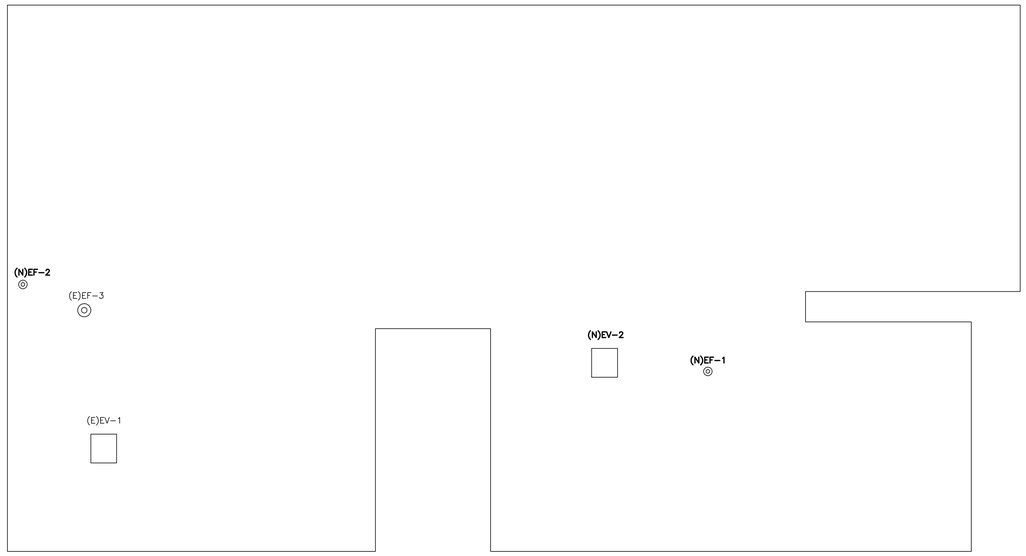

PN

ROOF - NEW MECHANICAL PLAN

SCALE 3/16"=1'-0"

REV	DATE	DESCRIPTION	DRAWN	APPRD
B	01JUL10	ISSUED FOR BID	SJL	CDS
A	11MAY10	ISSUED FOR REVIEW	SJL	CDS

AIR MOBILITY COMMAND
DOVER AIR FORCE BASE, DELAWARE

TITLE: REPAIR RESERVE HEADQUARTERS FACILITY 202

SUBMITTED	APPROVED	APPROVED
CHIEF ENGINEER	CHIEF ENGINEER	COMMANDER

DATE:	PROJECT #:	PLOT SCALE:	DRAWN BY:	DESIGNED BY:
4-30-10	049002	AS NOTED	DPA	JRF

NEW MECHANICAL PLANS 2ND FLOOR & ROOF

W-4497

SHT 25 OF 57

M2

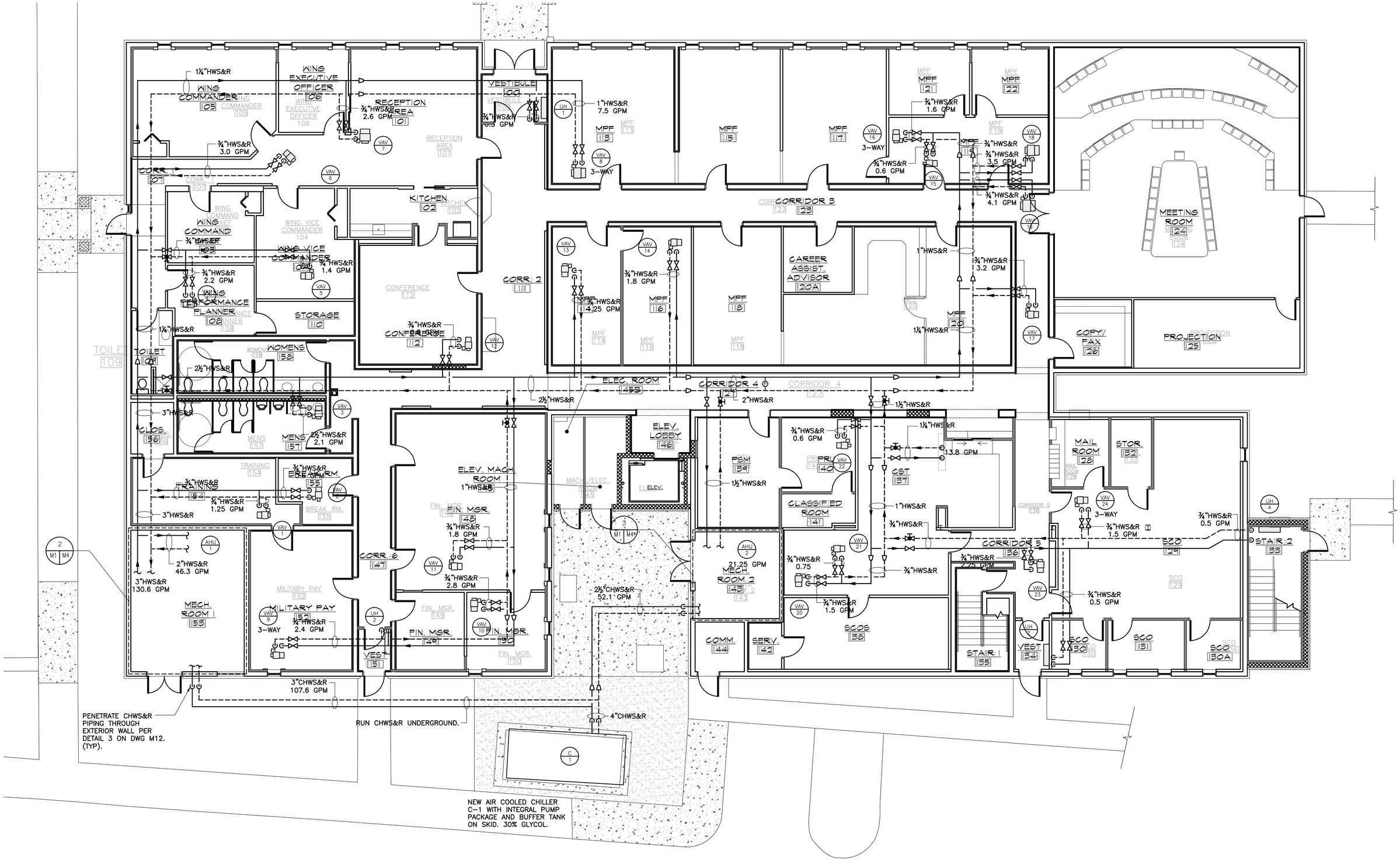

PN

1ST FLOOR – NEW MECHANICAL PIPING PLAN

SCALE 3/16"=1'-0"

REV	DATE	DESCRIPTION	DRAWN	APPRD
B	01JUL10	ISSUED FOR BID	SJL	CDS
A	11MAY10	ISSUED FOR REVIEW	SJL	CDS

AIR MOBILITY COMMAND
DOVER AIR FORCE BASE, DELAWARE

TITLE: REPAIR RESERVE HEADQUARTERS FACILITY 202

SUBMITTED	APPROVED	APPROVED
CHIEF ENGINEER	CHIEF ENGINEER	COMMANDER

DATE:	PROJECT #:	PLOT SCALE:	DRAWN BY:	DESIGNED BY:
4-30-10	049002	AS NOTED	DPA	JRF

NEW MECHANICAL FIRST FLOOR PIPING DESIGN

W-4497

SHT 26 OF 57

M3

NOTES:

1) CONTRACTOR SHALL MAINTAIN EXISTING CONDITION OF BATT INSULATION ABOVE 2ND FLOOR CEILING. IF INSULATION MUST BE DISTURBED, CONTRACTOR SHALL BE RESPONSIBLE FOR RESTORATION OR REPLACEMENT.

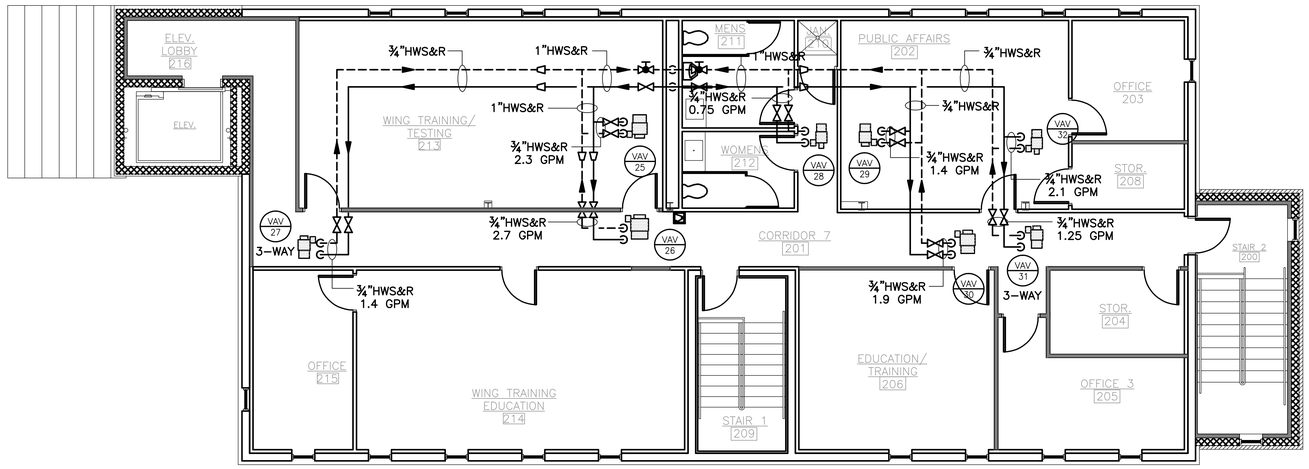

PN

SECOND FLOOR – NEW MECHANICAL PIPING PLAN

3/16" = 1'-0"

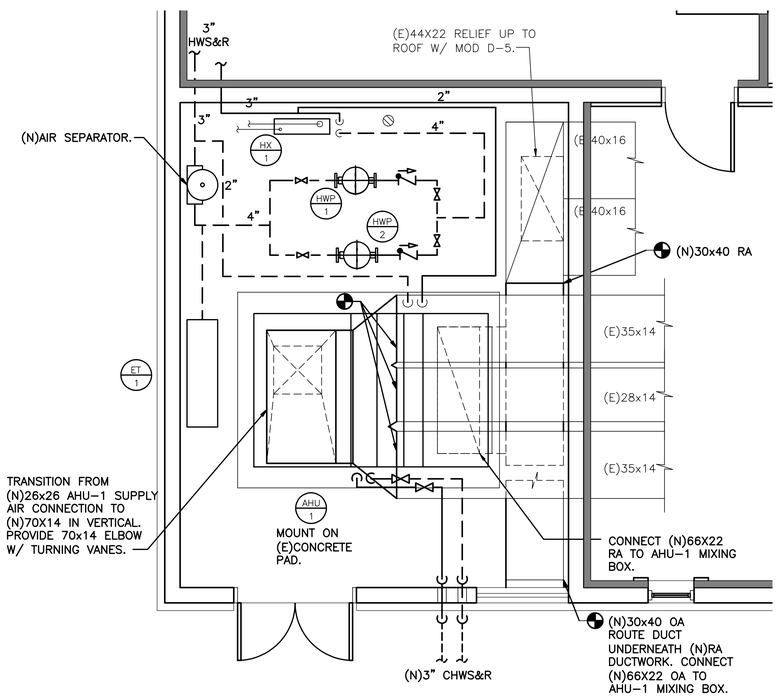

MECHANICAL ROOM 153 EQUIPMENT PLAN

3/8"=1'-0"

2 M1 M4

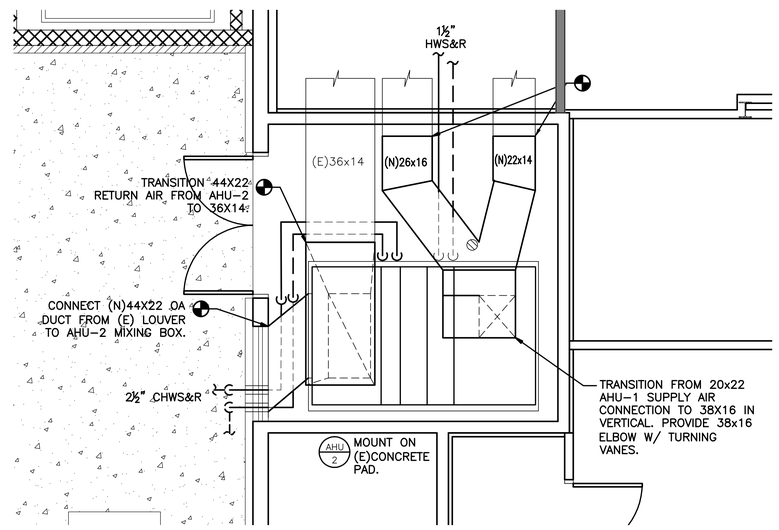

MECHANICAL ROOM 143 EQUIPMENT PLAN

3/8"=1'-0"

3 M1 M4

REV	DATE	DESCRIPTION	DRAWN	APPRD
B	01JUL10	ISSUED FOR BID	SJL	CDS
A	11MAY10	ISSUED FOR REVIEW	SJL	CDS

AIR MOBILITY COMMAND
DOVER AIR FORCE BASE, DELAWARE

TITLE: REPAIR RESERVE HEADQUARTERS FACILITY 202

SUBMITTED	APPROVED	APPROVED
CHIEF ENGINEER	CHIEF ENGINEER	COMMANDER

DATE:	PROJECT #:	PLOT SCALE:	DRAWN BY:	DESIGNED BY:
4-30-10	049002	AS NOTED	DPA	JRF

NEW MECHANICAL SECOND FLOOR PIPING DESIGN & PARTIAL MECH. ROOM PLANS

W-4497

SHT 27 OF 57

M4

AIR HANDLING UNIT SCHEDULE

TAG	MANUFACTURER	MODEL NO.	NOMINAL TONNAGE	SUPPLY AIR FAN					CHILLED WATER COOLING COI (30% PROPYLENE GLYCOL)L										HOT WATER HEATING COIL								POWER SUPPLY		REMARKS
				MINIMUM OA CFM	CFM	E.S.P. (IN H_2O)	RPM	HP	TOTAL (MBH)	SENS. (MBH)	E.A.T. (°F) DB	E.A.T. (°F) WB	L.A.T. (°F) DB	L.A.T. (°F) WB	GPM	EWT (°F)	LWT (°F)	ROWS	FINS PER INCH	CAPACITY (MBH)	GPM	EWT (°F)	LWT (°F)	E.A.T. (°F)	L.A.T. (°F)	ROWS	FINS PER INCH	VOLTAGE (V/PH/HZ)	FULL LOAD AMPS	
AHU 1	TRANE	CLIMATE CHANGER SIZE 21	40	3265	13250	2.0	1800	20	497.3	364.1	80.0	66.8	55.0	54.7	107.6	45.0	55.0	8	8.25	463.4	46.3	180.0	160.0	52.8	85.0	1	9.2	208V/3/60	100	1,3,5,6,7,8,9,10,11,12,13,14
AHU 2	TRANE	CLIMATE CHANGER SIZE 14	20	1260	7200	1.5	1800	10	240.8	186.3	78.5	65.6	55.0	54.6	52.1	45.0	55.0	8	7.2	212.8	21.3	180.0	160.0	57.8	85.0	1	7.5	208V/3/60	50	1,3,5,6,7,8,9,10,11,12,13,14

1. PROVIDE ALL REQUIRED STARTERS AND INTEGRAL FUSED DISCONNECT SWITCHES.
2. NOT USED.
3. PROVIDE CONDENSATE DRAIN W/TRAP (FULL SIZE OF UNIT CONNECTION).
4. NOT USED
5. PROVIDE INTAKE, FILTER, COIL (HEATING), ACCESS, COIL (COOLING), & FAN MODULES.
6. PROVIDE WITH 2" THROWAWAY FILTERS (MERV-7).
7. UNIT REQUIRES HACR TYPE BREAKER
8. PROVIDE DUCT SMOKE DETECTOR IN SUPPLY AND RETURN AIR DUCT.
9. PROVIDE BASE RAIL SIZED TO ACCOMODATE CONDENSATE TRAP.
10. PROVIDE FLEXIBLE DUCT CONNECTIONS TO UNIT.
11. PROVIDE TWO-INCH SPRING ISOLATORS FOR FAN & MOTOR ASSEMBLY.
12. CONNECT UNIT TO EXISTING BUILDING MANAGEMENT SYSTEM.
13. PROVIDE MOTORIZED OUTDOOR AIR DAMPER AND RETURN AIR DAMPER IN MIXING BOX.
14. PROVIDE W/ ECONOMIZER.

AIR-COOLED CHILLER SCHEDULE

UNIT NO	DESCRIPTION	FULL LOAD KW/TON	NOMINAL TONNAGE	TOTAL COOLING (MBH)	EVAPORATOR					VOLTS	HERTZ	# OF COMPRESSORS	COMP. RLA	COMP. LRA	MCA	MOCP	KW	REMARKS
					FLUID	EWT °F	LWT °F	GPM	ΔP FT	PHASE								
C 1	TRANE MODEL#CGAM060 (W/ PUMP PACKAGE & BUFFER TANK)	1.18	60	664.8	30% PROPYLENE GLYCOL	55.0°	45.0°	159.7	20.9	208 3	60	4	53.0	485.0	296.8	350.0	65.4	FURNISHED WITH FACTORY MOUNTED CONTROL PANEL, DUPLEX 3 HP PUMPS, 350 GAL. BUFFER TANK, AND VIBRATION ISOLATION PADS.

* OR APPROVED EQUAL

EXPANSION TANK SCHEDULE

UNIT NO.	SYSTEM	MANUFACTURER & MODEL NO.	VOLUME (GAL.)	ACCEPTANCE (GAL.)	PRECHARGE PRESSURE (PSI)	SYSTEM PRESSURE (PSI)	HEIGHT (IN.)	DIAMETER (IN.)	SHIPPING WEIGHT (LBS.)	REMARKS
ET 1	HOT WATER	BELL & GOSSETT MODEL# D-80	44.4	22.6	20.0	35.0	56.8	16.25	145	LOCATED IN EXISTING MECHANICAL ROOM IN LOCATION SHOWN ON DWG 2/M4.

* OR APPROVED EQUAL

HEAT EXCHANGER SCHEDULE

TAG	TYPE	SERVICE	MANUFACTURER	MODEL	SHELL SIDE			TUBE SIDE				REMARKS
					FLUID	FLOW RATE	OPER. PRESSURE	FLUID	FLOW RATE	EWT	LWT	
HX 1	SHELL & TUBE	HOT WATER LOOP	BELL & GOSSETT	QSU 8 2-2	STEAM	1561.7 LBS/HR	180 PSIG	WATER	135 GPM	160	180	–

* OR APPROVED EQUAL

DAMPER SCHEDULE

UNIT NO.	MANUFACTURER	MODEL NO.	LOCATION	AIRFLOW (CFM)	DIMENSIONS (IN.)	FREE AREA (SQ. FT.)	VELOCITY (FPM)	PRESSURE DROP (IN. WC)	ACTUATOR	REMARKS
D-1	RUSKIN	CD50	EF-1	225	9X9	0.56	400	0.012	LBAR120	PRESSURE CLASS 1A
D-2	RUSKIN	CD50	EF-2	90	9X9	0.56	160	0.010	LBAR120	PRESSURE CLASS 1A
D-3	RUSKIN	CD50	EF-3	675	16X16	1.78	380	0.010	LBAR120	PRESSURE CLASS 1A
D-4	NOT USED	–	–	–	–	–	–	–	–	–
D-5	RUSKIN	CD50	EV-1	3925	54X60	22.5	174	0.010	RLH-120	PRESSURE CLASS 1A
D-6	RUSKIN	CD50	EV-2	2125	36X42	10.5	202	0.010	ABAR120	PRESSURE CLASS 1A
D-7	RUSKIN	CD50	MECH ROOM 1	3925	48X42 (2)	14.0 (2)	140	0.010	ABAR120 (2)	PRESSURE CLASS 1A
D-8	RUSKIN	CD50	MECH ROOM 2	2125	48X54	18.0	118	0.010	RLH-120	PRESSURE CLASS 1A

* OR APPROVED EQUAL

PUMP SCHEDULE

UNIT NO	PIPING SYSTEM	MFG, SIZE, & MODEL	TYPE	DESIGN CAPACITY (GPM)	DESIGN HEAD (FT)	MOTOR RPM	MOTOR H.P.	VOLTS	REMARKS
								PHASE	
HWP 1,2	HOT WATER	BELL & GOSSETT SERIES 80 SIZE 2½x2½x9½B	INLINE	135	80	1800	7.5	208 3	PROVIDE WITH VFD. VFD SHALL HAVE A FUSIBLE SAFETY SWITCH, MAINTENANCE BYPASS, HARMONIC FILTRATION (TESTED AND SELECTED AFTER INSTALLATION). VFD SHALL BE EQUAL TO ABB AND PROVIDED AND INSTALLED BY THE ATC SUBCONTRACTOR.

* OR APPROVED EQUAL

EXHAUST FAN SCHEDULE

EF #

TAG	TYPE	MANUFACTURER	MODEL NO.	CFM	STATIC PRESSURE INCH (H_2O)	RPM	DRIVE	POWER (HP)	VOLTAGE (V/PH/HZ)	COMMENTS
EF-1	CENTRIFUGAL DOWNBLAST	ACME	PRN080-3	225	0.25	1550	DIRECT	1/10	115/60/1	1,3
EF-2	CENTRIFUGAL DOWNBLAST	ACME	PRN080-1	90	0.125	1550	DIRECT	1/10	115/60/1	1,3
EF-3	CENTRIFUGAL DOWNBLAST	ACME	PPN118E	675	0.375	-	DIRECT	1/4	115/60/1	1,2,3

* OR APPROVED EQUAL

NOTES:

1. INSTALL SOLID STATE SPEED CONTROLLER ABOVE CEILING IN PLENUM.
2. EXISTING FAN TO REMAIN AND BE REBALANCED.
3. BAS SHALL TURN FAN ON/OFF.

PTAC UNIT SCHEDULE

NO.	MAKE		TYPE	TOTAL MBH (HEATING)	TOTAL MBH (COOLING)	TOTAL CFM	OA CFM	ELECTRICAL			EER	REMARKS
	MANUFACTURER*	MODEL NO.						VOLTS/ø	MCA	MOCP		
PTAC 1	TRANE	PTHE0701UAB	THRU WALL	5.9	7.4	290	290	208/1	11.4	15	12.0	PROVIDE WALL SLEEVE, CONDENSATE DRAIN KIT, ARCH. OUTDOOR GRILLE, LEVELING LEGS, SUB-BASE KIT, AND REMOTE TEMPERATURE SENSOR.

* OR APPROVED EQUAL

DUCTLESS SPLIT-SYSTEM AIR CONDITIONER SCHEDULE

MS #

NO.	TYPE	LOCATION	MANUFACTURER	MODEL NO.	TOTAL COOLING (BTUH)	TOTAL HEATING (BTUH)	SEER	REFRIG.	ELECTRICAL			INDOOR UNITS (EACH)			OUTDOOR UNIT		REMARKS
									VOLTAGE (V/PH/HZ)	MOCP	RLA COOLING/HEATING	MODEL	WT.	AUX. ELEC. HEATER (KW)	MODEL	WT.	
MS-1	INDOOR/OUTDOOR UNIT	ELEV. MACH. ROOM	FRIEDRICH	MR18Y3F & MW18Y3F	18,000	21,600	19.0	R-410A	208/1/60	20	9.8/11.7	MR18Y3F	88	–	MW18Y3F	21	PROVIDE DISCONNECT SWITCH (INDOOR & OUTDOOR UNITS), MANUFACTURER'S PRE-CHARGED R-410A REFRIGERANT LINE SETS, & WIRELESS REMOTE FOR CONTROL. PROVIDE & FIELD INSTALL HEAD PRESSURE CONTROL KIT FOR LOW AMBIENT OPERATION DOWN TO 0°F, & WALL BRACKETS.
MS-2	INDOOR/OUTDOOR UNIT	SERVER ROOM	FRIEDRICH	MR09Y1F & MW09Y1F	9,700	9,600	14.3	R-410A	115/1/60	20	9.8/11.7	MR09Y1F	71	–	MW09Y1F	21	PROVIDE DISCONNECT SWITCH (INDOOR & OUTDOOR UNITS), MANUFACTURER'S PRE-CHARGED R-410A REFRIGERANT LINE SETS, & WIRELESS REMOTE FOR CONTROL. PROVIDE & FIELD INSTALL HEAD PRESSURE CONTROL KIT FOR LOW AMBIENT OPERATION DOWN TO 0°F, & WALL BRACKETS.

* OR APPROVED EQUAL

SCHEDULE OF AIR DEVICES

CD-1 CEILING DIFFUSER EQUAL TO PRICE MODEL ASCD, ALUMINUM, 4 CONE, FIXED DISCHARGE WITH 1,2,3 OR 4-WAY THROW. BORDER TYPE SHALL BE LAY-IN OR SURFACE MOUNT AS REQUIRED. PROVIDE MANUFACTURER'S OPPOSED BLADE LEVER OPERATED DAMPER AND ROUND NECK ADAPTOR PER SIZES SHOWN ON PLAN. FINISH SHALL BE BAKED ACRYLIC PAINT, COLOR AS SELECTED BY ARCH. NECK AND FACE SIZE AS SHOWN ON DRAWINGS. FACE SIZE TO BE 24x24 UNLESS OTHERWISE NOTED ON DRAWINGS.

RG-1 CEILING RETURN GRILLE EQUAL TO PRICE MODEL APDDR, STEEL CONSTRUCTION WITH ALUMINUM FACE SCREEN, PERFORATED FACE. PROVIDE LAY-IN OR SURFACE MOUNT BORDER AS REQUIRED. PROVIDE WITH 22x22 NECK FOR USE IN PLENUM RETURN. FINISH SHALL BE BAKED ON ACRYLIC PAINT, COLOR AS SELECTED BY ARCH. FACE SIZE TO BE 24x24 UNLESS OTHERWISE NOTED ON DRAWINGS.

RG-2 CEILING RETURN GRILLE EQUAL TO PRICE MODEL APDDR, STEEL CONSTRUCTION WITH ALUMINUM FACE SCREEN, PERFORATED FACE. PROVIDE LAY-IN OR SURFACE MOUNT BORDER AS REQUIRED. PROVIDE SQUARE NECK FOR USE WITH SOUND TRAP, SEE DETAIL 1/M6. FINISH SHALL BE BAKED ON ACRYLIC PAINT, COLOR AS SELECTED BY ARCH. FACE SIZE TO BE 24x24 UNLESS OTHERWISE NOTED ON DRAWINGS.

RG-3 CEILING RETURN GRILLE EQUAL TO PRICE MODEL APDDR, STEEL CONSTRUCTION WITH ALUMINUM FACE SCREEN, PERFORATED FACE. PROVIDE LAY-IN OR SURFACE MOUNT BORDER AS REQUIRED. PROVIDE ROUND NECK CONNECTION. FINISH SHALL BE BAKED ON ACRYLIC PAINT, COLOR AS SELECTED BY ARCH. FACE SIZE TO BE 24x24 UNLESS OTHERWISE NOTED ON DRAWINGS.

EG-1 CEILING EXHAUST GRILLE EQUAL TO PRICE MODEL APDDR, STEEL CONSTRUCTION WITH ALUMINUM FACE SCREEN, PERFORATED FACE. PROVIDE LAY-IN OR SURFACE MOUNT BORDER AS REQUIRED. PROVIDE SQUARE NECK CONNECTION. FINISH SHALL BE BAKED ON ACRYLIC PAINT, COLOR AS SELECTED BY ARCH. FACE SIZE TO BE 12x12 UNLESS OTHERWISE NOTED ON DRAWINGS.

REV	DATE	DESCRIPTION	DRAWN	APPRD
B	01JUL10	ISSUED FOR BID	SJL	CDS
A	11MAY10	ISSUED FOR REVIEW	SJL	CDS

AIR MOBILITY COMMAND
DOVER AIR FORCE BASE, DELAWARE

TITLE: REPAIR RESERVE HEADQUARTERS FACILITY 202

SUBMITTED: CHIEF ENGINEER | APPROVED: CHIEF ENGINEER | APPROVED: COMMANDER

DATE: 4-30-10 | PROJECT #: 049002 | PLOT SCALE: AS NOTED | DRAWN BY: WWR | DESIGNED BY: JRF

MECHANICAL EQUIPMENT SCHEDULES (1 OF 2)

W-4497

SHT 28 OF 57

M5

VARIABLE AIR VOLUME BOX SCHEDULE

TAG	MANUFACTURER	SIZE			AIRFLOW (CFM)			HOT WATER HEATING COIL					REMARKS
		UNIT	INLET	OUTLET	MAX	MIN	HTG.	MBH	GPM	EAT/LAT	EWT/LWT	ROWS	
VAV 1	TRANE MODEL VCWF	08	8"ø	11"x10"	365	110	270	12.4	1.25	55/95	180/160	1	-
VAV 2	TRANE MODEL VCWF	05	5"ø	10"x8"	300	90	90	5.79	0.6	55/95	180/160	1	-
VAV 3	TRANE MODEL VCWF	08	8"ø	11"x10"	675	675	675	20.8	2.1	55/95	180/160	1	-
VAV 4	TRANE MODEL VCWF	06	6"ø	10"x8"	375	90	375	22.16	2.2	55/95	180/160	2	-
VAV 5	TRANE MODEL VCWF	08	8"ø	11"x10"	580	175	315	13.49	1.4	55/95	180/160	1	-
VAV 6	TRANE MODEL VCWF	08	8"ø	11"x10"	595	135	595	30.4	3.0	55/95	180/160	2	-
VAV 7	TRANE MODEL VCWF	12	12"ø	17"x14"	840	260	600	25.93	2.6	55/95	180/160	1	-
VAV 8	TRANE MODEL VCWF	12	12"ø	17"x14"	1460	415	1460	74.99	7.5	55/95	180/160	2	-
VAV 9	TRANE MODEL VCWF	06	6"ø	10"x8"	430	120	430	23.8	2.4	55/95	180/160	2	-
VAV 10	TRANE MODEL VCWF	08	8"ø	11"x10"	520	155	500	27.75	2.8	55/95	180/160	2	-
VAV 11	TRANE MODEL VCWF	10	10"ø	14"x12"	690	210	375	18.47	1.8	55/95	180/160	1	-
VAV 12	TRANE MODEL VCWF	06	6"ø	10"x8"	360	180	180	8.37	0.8	55/95	180/160	1	-
VAV 13	TRANE MODEL VCWF	08	8"ø	11"x10"	830	250	270	12.4	1.25	55/95	180/160	1	-
VAV 14	TRANE MODEL VCWF	10	10"ø	14"x12"	1180	350	350	17.79	1.8	55/95	180/160	1	-
VAV 15	TRANE MODEL VCWF	04	4"ø	10"x8"	175	50	80	5.48	0.6	55/95	180/160	1	-
VAV 16	TRANE MODEL VCWF	08	8"ø	11"x10"	405	120	405	15.53	1.6	55/95	180/160	1	-
VAV 17	TRANE MODEL VCWF	08	8"ø	11"x10"	760	230	660	32.02	3.2	55/95	180/160	2	-
VAV 18	TRANE MODEL VCWF	12	12"ø	17"x14"	1020	505	575	25.34	2.5	55/95	180/160	1	-
VAV 19	TRANE MODEL VCWF	14	14"ø	19"x18"	1530	755	860	39.39	3.4	55/95	180/160	1	-
VAV 20	TRANE MODEL VCWF	08	8"ø	11"x10"	530	160	370	14.76	1.5	55/95	180/160	1	-
VAV 21	TRANE MODEL VCWF	06	6"ø	10"x8"	465	140	140	7.32	0.75	55/95	180/160	1	-
VAV 22	TRANE MODEL VCWF	05	5"ø	10"x8"	310	90	90	5.79	0.6	55/95	180/160	1	-
VAV 23	TRANE MODEL VCWF	10	10"ø	14"x12"	700	210	530	22.36	2.25	55/95	180/160	1	-
VAV 24	TRANE MODEL VCWF	08	8"ø	11"x10"	600	180	360	14.53	1.5	55/95	180/160	1	-
VAV 25	TRANE MODEL VCWF	10	10"ø	14"x12"	800	255	550	22.82	2.3	55/95	180/160	1	-
VAV 26	TRANE MODEL VCWF	12	12"ø	17"x14"	980	300	630	26.62	2.7	55/95	180/160	1	-
VAV 27	TRANE MODEL VCWF	08	8"ø	11"x10"	370	110	340	14.08	1.4	55/95	180/160	1	-
VAV 28	TRANE MODEL VCWF	05	5"ø	10"x8"	240	225	140	7.32	0.75	55/95	180/160	1	-
VAV 29	TRANE MODEL VCWF	08	8"ø	11"x10"	400	120	345	14.19	1.4	55/95	180/160	1	-
VAV 30	TRANE MODEL VCWF	10	10"ø	14"x12"	800	240	410	19.39	1.9	55/95	180/160	1	-
VAV 31	TRANE MODEL VCWF	08	8"ø	11"x10"	425	130	265	12.27	1.25	55/95	180/160	1	-
VAV 32	TRANE MODEL VCWF	05	5"ø	10"x8"	330	100	330	20.62	2.1	55/95	180/160	–	-

UNIT HEATER SCHEDULE

TAG	MANUFACTURER	MODEL NO.	UNIT SIZE	GPM	PD	HIGH FAN SPEED				LOW FAN SPEED				REMARKS
						CFM	MBH	WTD	LAT	CFM	MBH	WTD	LAT	
UH 1	RITTLING	RFI	2	0.5	.1	275	12.4	51.3	101.6	190	10.83	44.9	112.5	FLOOR MOUNTED, INVERTED FLOW
UH 2	RITTLING	RFI	2	0.5	.1	275	12.4	51.3	101.6	190	10.83	44.9	112.5	FLOOR MOUNTED, INVERTED FLOW
UH 2	RITTLING	RFI	2	0.5	.1	275	12.4	51.3	101.6	190	10.83	44.9	112.5	FLOOR MOUNTED, INVERTED FLOW
UH 2	RITTLING	RFI	2	0.5	.1	275	12.4	51.3	101.6	190	10.83	44.9	112.5	FLOOR MOUNTED, INVERTED FLOW

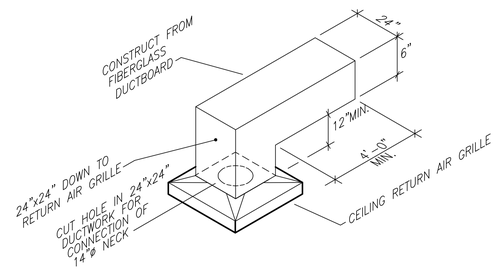

RETURN GRILLE SOUNDTRAP DETAIL 1 M6 M6

REV	DATE	DESCRIPTION	DRAWN	APPRD
B	01JUL10	ISSUED FOR BID	SJL	CDS
A	11MAY10	ISSUED FOR REVIEW	SJL	CDS

AIR MOBILITY COMMAND
DOVER AIR FORCE BASE, DELAWARE

TITLE: REPAIR RESERVE HEADQUARTERS FACILITY 202

SUBMITTED	APPROVED	APPROVED
CHIEF ENGINEER	CHIEF ENGINEER	COMMANDER

DATE:	PROJECT #:	PLOT SCALE:	DRAWN BY:	DESIGNED BY:
4-30-10	049002	AS NOTED	WWR	JRF

MECHANICAL EQUIPMENT SCHEDULES (2 OF 2)

W-4497

SHT 29 OF 57

M6

AHU FLOW DIAGRAM

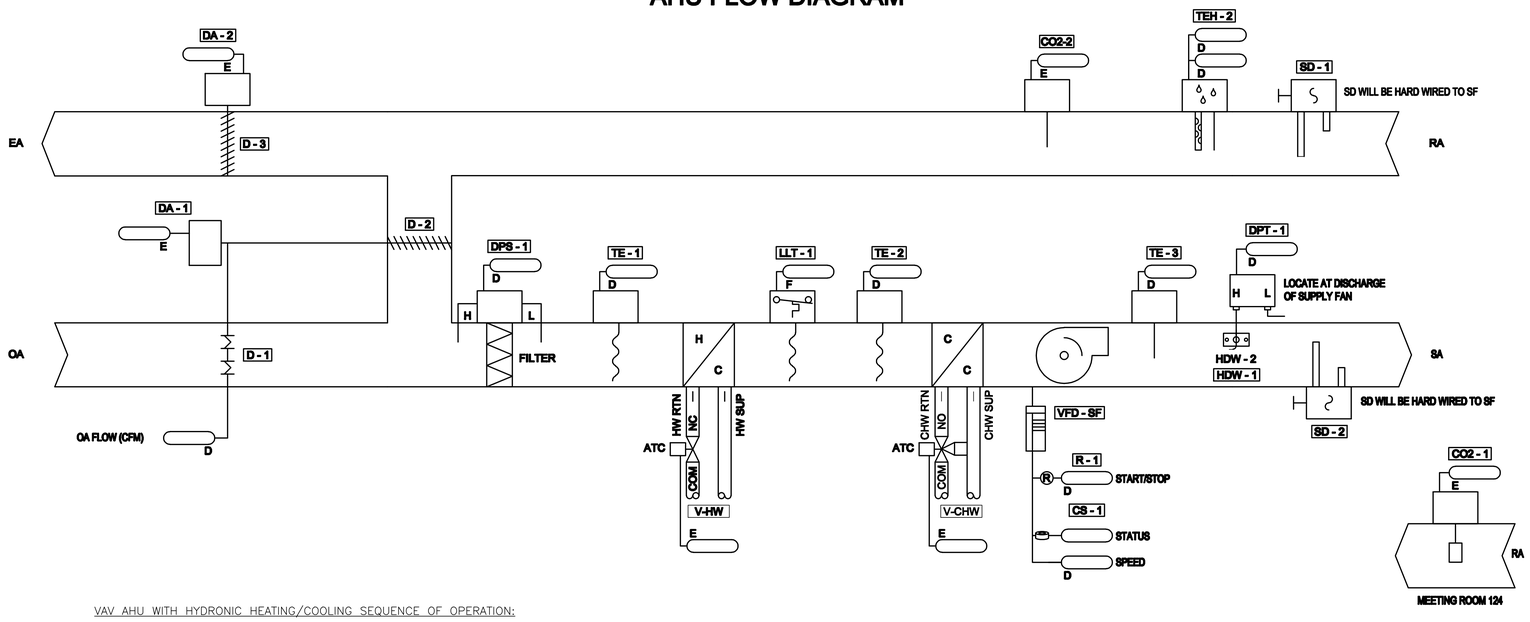

VAV BOX FLOW DIAGRAM

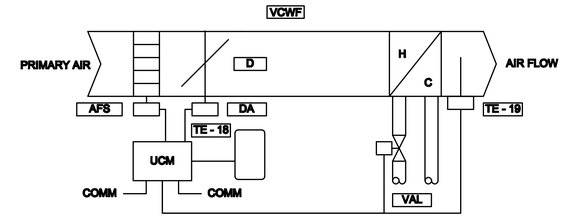

NOTE: AFS, D, DA AND UCM ARE FACTORY INSTALLED AND WIRED. TE(s) AND VAL ARE FIELD INSTALLED AND WIRED.

EXHAUST FAN FLOW DIAGRAM

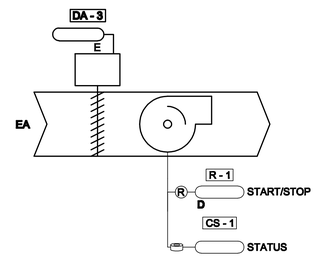

VAV AHU WITH HYDRONIC HEATING/COOLING SEQUENCE OF OPERATION:

GENERAL:

THE SYSTEM CONSISTS OF A VARIABLE AIR VOLUME (VAV) AIR HANDLING UNIT (AHU-1,2) WITH A FILTER SECTION, HOT WATER PREHEAT COIL, CHILLED WATER COOLING COIL, SUPPLY AIR FAN, AND VAV BOXES W/ HOT WATER REHEAT (VAV-#). THE UNIT SHALL BE PROVIDED WITH AN APPLICATION CONTROLLER TO INTERFACE WITH THE EXISTING BUILDING AUTOMATION SYSTEM (BAS).

BUILDING AUTOMATION SYSTEM INTERFACE:

THE BUILDING AUTOMATION SYSTEM (BAS) WILL SEND THE CONTROLLER OCCUPIED, UNOCCUPIED, OPTIMAL START, NIGHT HEAT / COOL AND TIMED OVERRIDE COMMANDS. THE BAS WILL ALSO SEND A DISCHARGE AIR TEMPERATURE SETPOINT AND A DUCT STATIC PRESSURE SETPOINT. IF COMMUNICATION IS LOST WITH THE BAS, THE CONTROLLER WILL OPERATE IN THE OCCUPIED COOLING MODE USING ITS DEFAULT SETPOINTS.

OCCUPIED:

DURING OCCUPIED PERIODS THE SUPPLY FAN WILL RUN CONTINUOUSLY AND THE OUTSIDE AIR DAMPER WILL OPEN TO MAINTAIN MINIMUM VENTILATION REQUIREMENTS. ALL VALVES WILL MODULATE TO MAINTAIN THE DISCHARGE AIR TEMPERATURE COOLING SETPOINT (55°F ADJ). IF THE DISCHARGE AIR TEMPERATURE SENSOR FAILS DURING NORMAL OPERATION ALL ASSOCIATED VALVES WILL CLOSE AND AN ALARM WILL BE ANNUNCIATED.

OCCUPIED (DAYTIME WARM-UP):

DURING OCCUPIED PERIODS, WHEN THE SPACE TEMPERATURE IS 1.5°F (ADJ) OR MORE BELOW THE OCCUPIED HEATING SETPOINT, A DAYTIME WARM-UP SEQUENCE WILL BE ACTIVATED. THE OUTSIDE AIR DAMPER WILL MODULATE TO MAINTAIN MINIMUM VENTILATION REQUIREMENTS, AND THE HOT WATER VALVE WILL MODULATE TO MAINTAIN THE DAT HEATING SETPOINT (55°F ADJ). MODE WILL TERMINATE WHEN THE AVERAGE SPACE TEMPERATURE REACHES THE OCCUPIED HEATING SETPOINT.

UNOCCUPIED (NIGHT SETBACK):

WHEN THE SPACE TEMPERATURE IS BELOW THE UNOCCUPIED HEATING SETPOINT (60°F ADJ) THE SUPPLY FAN WILL START, THE OUTSIDE AIR DAMPER WILL REMAIN CLOSED AND THE HOT WATER VALVE WILL OPEN. WHEN THE SPACE TEMPERATURE RISES ABOVE THE UNOCCUPIED HEATING SETPOINT (60°F ADJ) PLUS THE UNOCCUPIED DIFFERENTIAL (4°F ADJ) THE SUPPLY FAN WILL STOP AND THE HOT WATER VALVE WILL CLOSE.

WHEN THE SPACE TEMPERATURE IS ABOVE THE UNOCCUPIED COOLING SETPOINT (85°F ADJ) THE SUPPLY FAN WILL START, THE OUTSIDE AIR DAMPER WILL REMAIN CLOSED AND THE CHILLED WATER VALVE WILL OPEN. WHEN THE SPACE TEMPERATURE FALLS BELOW THE UNOCCUPIED COOLING SETPOINT (85°F ADJ) MINUS THE UNOCCUPIED DIFFERENTIAL (4°F ADJ) THE SUPPLY FAN WILL STOP AND THE CHILLED WATER VALVE WILL CLOSE.

MORNING WARM-UP:

DURING OPTIMAL START, IF THE SPACE TEMPERATURE IS 1.5°F (ADJ) OR MORE BELOW THE OCCUPIED HEATING SETPOINT, A MORNING WARM-UP SEQUENCE WILL BE ACTIVATED. THE SUPPLY FAN WILL START, THE OUTSIDE AIR DAMPER WILL REMAIN CLOSED, AND THE HOT WATER VALVE WILL MODULATE TO MAINTAIN THE DAT HEATING SETPOINT (55°F ADJ). MODE WILL TERMINATE WHEN THE SPACE TEMPERATURE REACHES THE OCCUPIED HEATING SETPOINT OR THE OCCUPIED TIME PERIOD HAS STARTED.

MORNING COOL-DOWN:

DURING OPTIMAL START, IF THE SPACE TEMPERATURE IS ABOVE THE OCCUPIED COOLING SETPOINT, A MORNING COOL DOWN SEQUENCE WILL BE ACTIVATED. THE SUPPLY FAN WILL START AND THE CHILLED WATER VALVE WILL MODULATE TO MAINTAIN THE DAT COOLING SETPOINT (55°F ADJ). THE OUTSIDE AIR DAMPER WILL REMAIN CLOSED. MODE WILL TERMINATE WHEN THE SPACE TEMPERATURE REACHES THE OCCUPIED COOLING SETPOINT OR THE OCCUPIED TIME PERIOD HAS STARTED.

SUPPLY FAN:

THE FAN WILL BE OFF IN THE UNOCCUPIED MODE. WHEN THE CONTROLLER IS IN THE OCCUPIED MODE, THE SUPPLY FAN WILL OPERATE CONTINUOUSLY AND ITS SPEED WILL BE MODULATED TO MAINTAIN THE DUCT STATIC PRESSURE SETPOINT. THE DUCT STATIC PRESSURE SETPOINT IS SENT BY THE BAS AND IS RESET BETWEEN THE MINIMUM AND MAXIMUM STATIC PRESSURE LIMITS TO MAINTAIN THE "CRITICAL ZONE" VAV AIR DAMPER IN A POSITION BETWEEN 65% AND 75% OPEN.

IF THE SUPPLY FAN FAILS TO PROVE STATUS FOR 30 SECONDS (ADJ), THE FAN WILL BE COMMANDED OFF, THE OUTSIDE AIR DAMPER AND ALL VALVES WILL CLOSE AND AN ALARM WILL BE ANNUNCIATED. A MANUAL RESET IS REQUIRED TO RESTART THE FAN. A HARDWIRED, HIGH STATIC PRESSURE CUT-OFF SWITCH IS ELECTRICALLY INTERLOCKED WITH THE VARIABLE SPEED DRIVE. IF THE HIGH STATIC PRESSURE CUT-OFF SWITCH IS TRIPPED THE FAN WILL STOP, THE OUTSIDE AIR DAMPER AND ALL VALVES WILL CLOSE AND AN ALARM WILL BE ANNUNCIATED. A MANUAL RESET OF THE HIGH STATIC PRESSURE CUT-OFF SWITCH WILL BE REQUIRED TO RESTART THE FAN.

FREEZE PROTECTION:

THE INITIAL DAMPER OPENING RATE WILL BE LIMITED TO 2% PER MINUTE UNTIL THE DAMPER HAS REACHED ITS MINIMUM VENTILATION POSITION. THE OUTSIDE AIR DAMPER WILL MODULATE TO A POSITION LESS THAN THE MINIMUM DAMPER POSITION IF THE MIXED AIR TEMPERATURE DROPS BELOW 50°F (ADJ). IF THE MIXED AIR TEMPERATURE SENSOR FAILS THE OUTSIDE AIR DAMPER WILL CLOSE AND AN ALARM WILL BE ANNUNCIATED.

A HARDWIRED, LOW LIMIT TEMPERATURE SWITCH IS ELECTRICALLY INTERLOCKED WITH THE VARIABLE SPEED DRIVE. IF THE LOW LIMIT TEMPERATURE SWITCH IS TRIPPED (38°F ADJ), THE OUTSIDE AIR DAMPER WILL CLOSE, ALL VALVES WILL OPEN TO 100% (ADJUST PER CLIMATE) AND AN ALARM WILL BE ANNUNCIATED. A MANUAL RESET OF THE LOW LIMIT TEMPERATURE SWITCH WILL BE REQUIRED TO RESTART THE FAN.

FILTER STATUS:

A DIFFERENTIAL PRESSURE SWITCH WILL MONITOR THE DIFFERENTIAL PRESSURE ACROSS THE FILTER WHEN THE FAN IS RUNNING. IF THE SWITCH CLOSES DURING NORMAL OPERATION A DIRTY FILTER ALARM WILL BE ANNUNCIATED.

ECONOMIZER DAMPER CONTROL:

WHEN THE OUTDOOR AIR DRY BULB / WET BULB (ENTHALPY) CONDITIONS ARE FAVORABLE, THE OUTDOOR AIR DAMPER AND MECHANICAL COOLING WILL BE CONTROLLED TO MAINTAIN THE SUPPLY AIR TEMPERATURE AT SETPOINT. MECHANICAL COOLING WILL BE LOCKED OUT AND THE OUTDOOR AIR DAMPER WILL MODULATE BETWEEN THE MINIMUM POSITION AND 100% OPEN TO ALLOW OUTDOOR AIR TO BE DELIVERED FOR FREE COOLING. IF THE OUTDOOR AIR DAMPER REACHES 100% OPEN AND THE SUPPLY AIR TEMPERATURE SETPOINT CAN NOT BE MAINTAINED USING OUTDOOR AIR ALONE, THE OUTDOOR AIR DAMPER WILL BE HELD 100% OPEN AND MECHANICAL COOLING WILL BE ENABLED.
WHEN THE OUTDOOR AIR DRY BULB / WET BULB (ENTHALPY) CONDITIONS ARE NOT FAVORABLE, THE OUTDOOR AIR DAMPER WILL BE CONTROLLED TO MINIMUM POSITION AND MECHANICAL COOLING WILL BE CONTROLLED TO MAINTAIN THE SUPPLY AIR TEMPERATURE AT SETPOINT.

DEMAND CONTROL VENTILATION:

WHEN THE AIR HANDLER IS INDEXED TO THE OCCUPIED MODE, THE OA, RA, AND RELIEF AIR DAMPER SHALL MODULATE TO MAINTAIN A CO2 CONCENTRATION SETPOINT OF 800 PPM (ADJ.). THE SETPOINT WILL BE MAINTAINED AT THE GREATER OF THE READINGS AT THE TWO SENSORS (RETURN AIR DUCTWORK AND MEETING ROOM 124).

VAV BOX WITH HOT WATER REHEAT

ON A RISE IN SPACE AIR TEMPERATURE ABOVE THE COOLING SETPOINT, AS SENSED BY THE SPACE AIR TEMPERATURE SENSOR, THE VARIABLE AIR VOLUME (VAV) TERMINAL UNIT'S DAMPER WILL MODULATE OPEN TO ITS MAXIMUM AIRFLOW (CFM)

AS THE SPACE TEMPERATURE DROPS BELOW THE COOLING SETPOINT, THE TERMINAL UNIT'S DAMPER WILL MODULATE CLOSED TOWARD ITS MINIMUM AIRFLOW TO MAINTAIN SETPOINT.

AS THE SPACE AIR TEMPERATURE CONTINUES TO FALL BELOW THE HEATING SETPOINT, THE VAV'S UNIT DAMPER WILL MODULATE TO ITS HEATING MINIMUM CFM, AND THE HOT WATER VALVE WILL MODULATE OPEN TO MAINTAIN SETPOINT.

MORNING WARM-UP MODE:

ON A CALL FOR HEATING, THE VAV'S DAMPER SHALL MODULATE TO PROVIDE THE REQUIRED HEATING AIRFLOW.

UPON A DROP IN SPACE AIR TEMPERATURE BELOW SETPOINT (ADJ.) AS SENSED BY THE SPACE AIR TEMPERATURE SENSOR, THE HEATING SHALL OPERATE AS DESCRIBED IN THE OCCUPIED MODE TO MAINTAIN SETPOINT.

UPON A RISE IN SPACE AIR TEMPERATURE ABOVE SETPOINT, THE REVERSE SHALL OCCUR.

ONCE SPACE TEMPERATURE SETPOINT HAS BEEN SATISFIED, THE UNIT SHALL BE COMMANDED TO THE OCCUPIED MODE.

THE LENGTH OF MORNING WARM-UP SHALL BE ADJUSTED USING AN OPTIMIZING PROGRAMMING TO MINIMIZE THE TIME PERIOD. THE TIME PERIOD SHALL BE ADJUSTABLE THROUGH THE BAS, AND INITIALLY SET FOR 60 MINUTES.

MORNING COOL-DOWN MODE:

ON A CALL FOR COOLING, THE VAV'S DAMPER SHALL OPEN TO PROVIDE ITS MAXIMUM CFM UNTIL THE SPACE TEMPERATURE SETPOINT IS SATISFIED.

ONCE SPACE TEMPERATURE SETPOINT HAS BEEN SATISFIED, THE UNIT SHALL BE COMMANDED TO THE OCCUPIED MODE.

THE LENGTH OF MORNING WARM-UP SHALL BE ADJUSTED USING AN OPTIMIZING PROGRAMMING TO MINIMIZE THE TIME PERIOD. THE TIME PERIOD SHALL BE ADJUSTABLE THROUGH THE BAS, AND INITIALLY SET FOR 60 MINUTES.

LOCAL OVERRIDE:

THE SPACE TEMPERATURE SETPOINT SHALL BE USER ADJUSTABLE AT THE SPACE TEMPERATURE SENSOR.

EXHAUST FAN CONTROL SEQUENCE:

WHEN THE ASSOCIATED AIR HANDLER IS IN THE OCCUPIED MODE, THE BAS SHALL OPEN THE ASSOCIATED MOTOR OPERATED DAMPER AND ENERGIZE THE EXHAUST FAN. WHEN THE AIR HANDLER IS INDEXED TO THE UNOCCUPIED MODE, THE REVERSE SHALL OCCUR.

EMERGENCY AIR DISTRIBUTION SHUTOFF:

WHEN EMERGENCY SWITCH IS ACTIVATED, AIR HANDLERS SHALL BE DE-ENERGIZED, THE VAV BOX DAMPERS SHALL CLOSE, ALL COIL CONTROL VALVES SHALL CLOSE, ALL EXHAUST FANS WILL BE DE-ENERGIZED, AND ALL MOTORIZED DAMPERS SHALL CLOSE.

REV	DATE	DESCRIPTION	DRAWN	APPRD
B	01JUL10	ISSUED FOR BID	SJL	CDS
A	11MAY10	ISSUED FOR REVIEW	SJL	CDS

AIR MOBILITY COMMAND
DOVER AIR FORCE BASE, DELAWARE

TITLE: REPAIR RESERVE HEADQUARTERS FACILITY 202

SUBMITTED	APPROVED	APPROVED
CHIEF ENGINEER	CHIEF ENGINEER	COMMANDER

DATE:	PROJECT #:	PLOT SCALE:	DRAWN BY:	DESIGNED BY:
4-30-10	049002	AS NOTED	WWR	JRF

AHU SYSTEM & VAV BOX CONTROL DIAGRAM & SEQUENCE OF OPERATION

W-4497

SHT 30 OF 57

M7

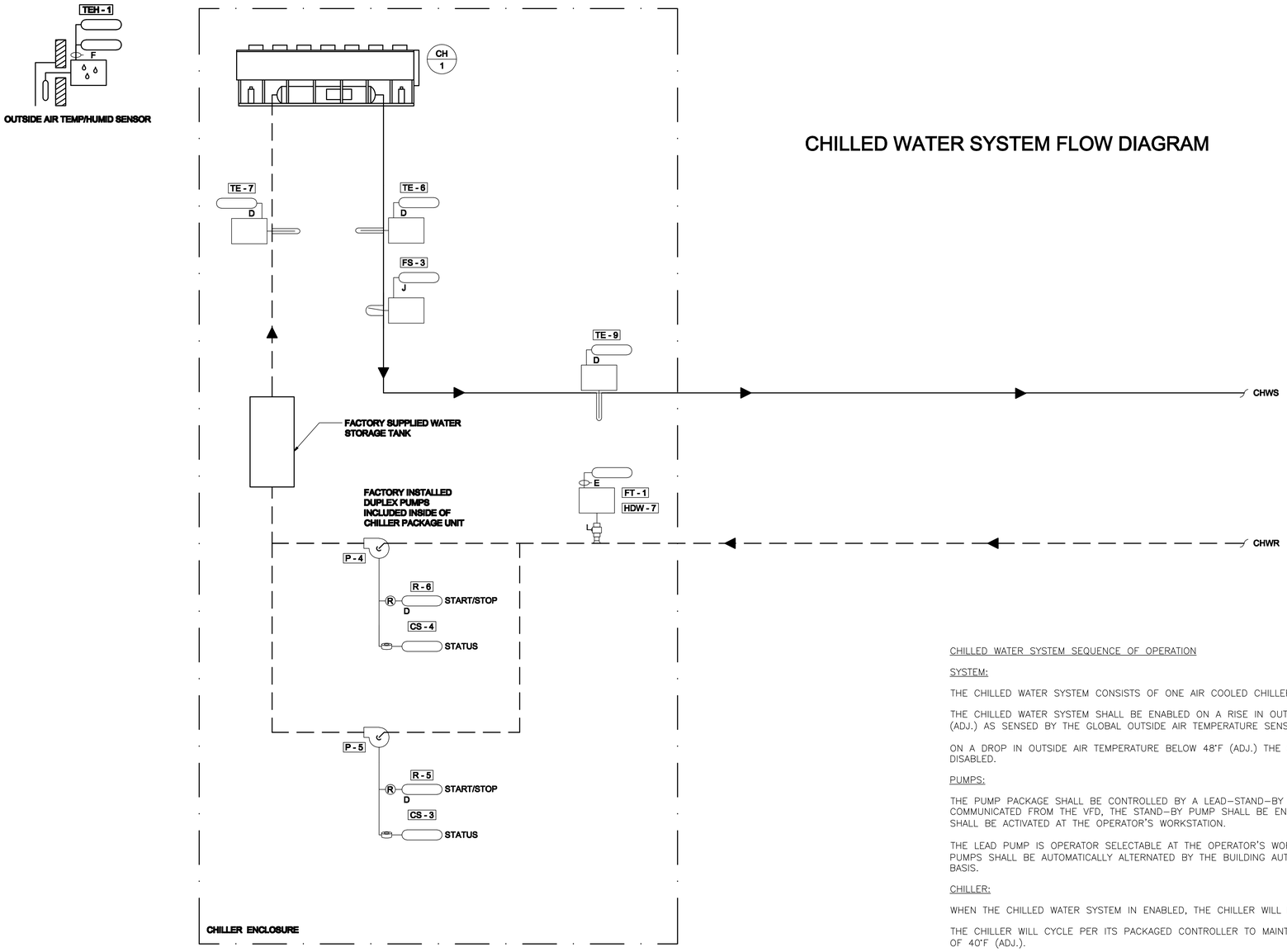

CHILLED WATER SYSTEM FLOW DIAGRAM

CHILLED WATER SYSTEM SEQUENCE OF OPERATION

SYSTEM:

THE CHILLED WATER SYSTEM CONSISTS OF ONE AIR COOLED CHILLER AND TWO PRIMARY LOOP PUMPS.

THE CHILLED WATER SYSTEM SHALL BE ENABLED ON A RISE IN OUTSIDE AIR TEMPERATURE ABOVE 50°F (ADJ.) AS SENSED BY THE GLOBAL OUTSIDE AIR TEMPERATURE SENSOR.

ON A DROP IN OUTSIDE AIR TEMPERATURE BELOW 48°F (ADJ.) THE CHILLED WATER SYSTEM SHALL BE DISABLED.

PUMPS:

THE PUMP PACKAGE SHALL BE CONTROLLED BY A LEAD–STAND–BY PROGRAM. UPON LEAD PUMP FAILURE COMMUNICATED FROM THE VFD, THE STAND–BY PUMP SHALL BE ENERGIZED, AND AN OPERATIONAL ALARM SHALL BE ACTIVATED AT THE OPERATOR'S WORKSTATION.

THE LEAD PUMP IS OPERATOR SELECTABLE AT THE OPERATOR'S WORKSTATION. THE LEAD AND STAND–BY PUMPS SHALL BE AUTOMATICALLY ALTERNATED BY THE BUILDING AUTOMATION SYSTEM (BAS) ON A WEEKLY BASIS.

CHILLER:

WHEN THE CHILLED WATER SYSTEM IN ENABLED, THE CHILLER WILL BE ENABLED.

THE CHILLER WILL CYCLE PER ITS PACKAGED CONTROLLER TO MAINTAIN CHILLED WATER SUPPLY SETPOINT OF 40°F (ADJ.).

ON A DROP IN CHILLER WATER FLOW BELOW SETPOINT AS SENSED BY A FLOW METER, THE BYPASS VALVE V–BYP SHALL MODULATE TO DIVERT FLOW FROM THE SECONDARY LOOP TO THE PRIMARY LOOP TO MAINTAIN SETPOINT.

EMERGENCY AIR DISTRIBUTION SHUTOFF:

WHEN EMERGENCY SWITCH IS ACTIVATED, THE CHILLED WATER PUMPS AND THE CHILLER SHALL BE DE–ENERGIZED.
ON A DROP IN CHILLER WATER

REV	DATE	DESCRIPTION	DRAWN	APPRD
B	01JUL10	ISSUED FOR BID	SJL	CDS
A	11MAY10	ISSUED FOR REVIEW	SJL	CDS

AIR MOBILITY COMMAND
DOVER AIR FORCE BASE, DELAWARE

TITLE: REPAIR RESERVE HEADQUARTERS FACILITY 202

SUBMITTED	APPROVED	APPROVED
CHIEF ENGINEER	CHIEF ENGINEER	COMMANDER

DATE:	PROJECT #:	PLOT SCALE:	DRAWN BY:	DESIGNED BY:
4–30–10	049002	AS NOTED	WWR	JRF

CHW SYSTEM CONTROL DIAGRAM & SEQUENCE OF OPERATION

W–4497

SHT 31 OF 57

M8

HW SYSTEM FLOW DIAGRAM

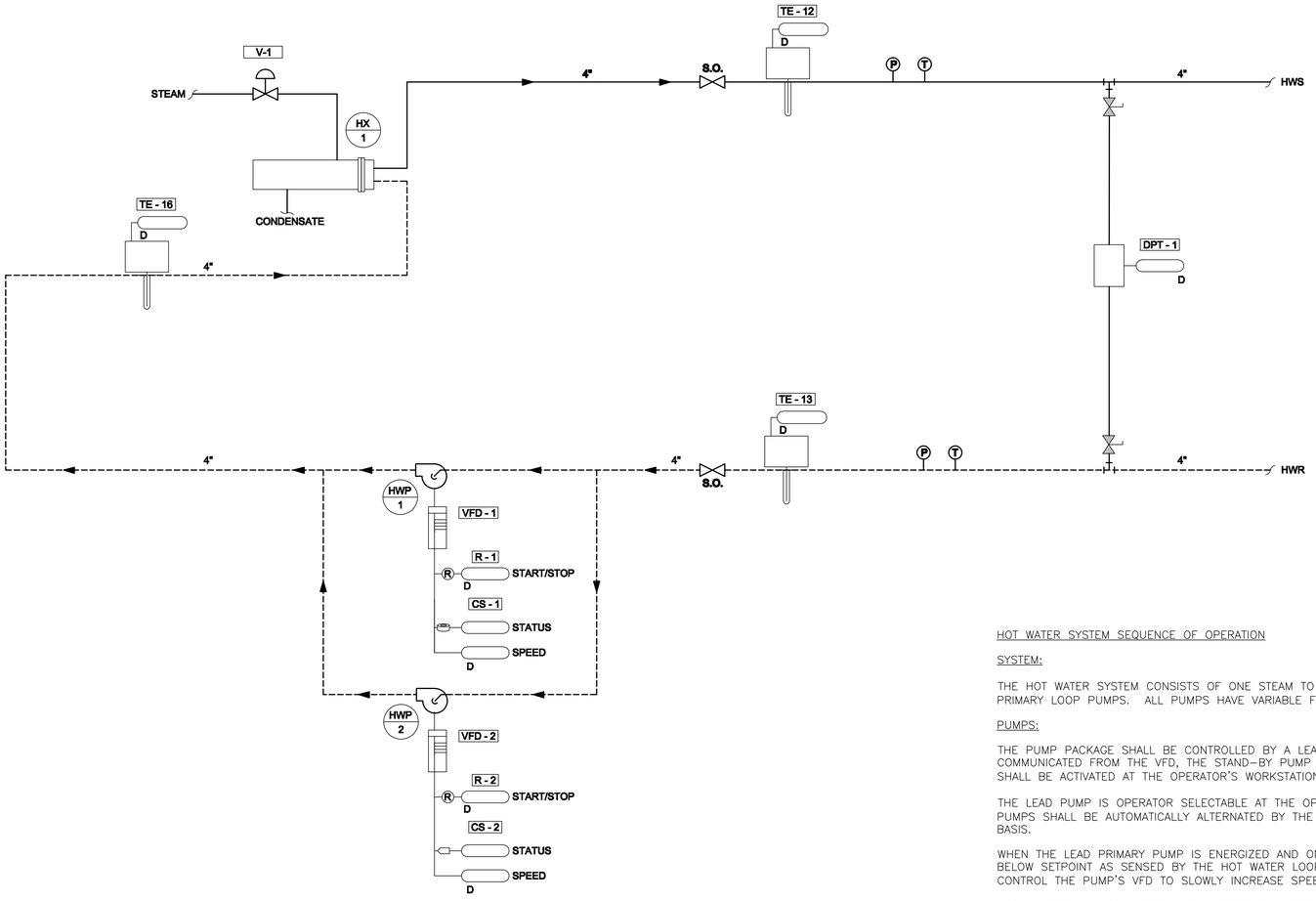

HOT WATER SYSTEM SEQUENCE OF OPERATION

SYSTEM:

THE HOT WATER SYSTEM CONSISTS OF ONE STEAM TO HOT WATER HEAT EXCHANGER (HX-1), AND TWO PRIMARY LOOP PUMPS. ALL PUMPS HAVE VARIABLE FREQUENCY DRIVES (VFD).

PUMPS:

THE PUMP PACKAGE SHALL BE CONTROLLED BY A LEAD-STAND-BY PROGRAM. UPON LEAD PUMP FAILURE COMMUNICATED FROM THE VFD, THE STAND-BY PUMP SHALL BE ENERGIZED, AND AN OPERATIONAL ALARM SHALL BE ACTIVATED AT THE OPERATOR'S WORKSTATION.

THE LEAD PUMP IS OPERATOR SELECTABLE AT THE OPERATOR'S WORKSTATION. THE LEAD AND STAND-BY PUMPS SHALL BE AUTOMATICALLY ALTERNATED BY THE BUILDING AUTOMATION SYSTEM (BAS) ON A WEEKLY BASIS.

WHEN THE LEAD PRIMARY PUMP IS ENERGIZED AND ON A DROP IN HOT WATER LOOP DIFFERENTIAL PRESSURE BELOW SETPOINT AS SENSED BY THE HOT WATER LOOP DIFFERENTIAL PRESSURE SENSOR, THE BAS SHALL CONTROL THE PUMP'S VFD TO SLOWLY INCREASE SPEED TO MAINTAIN SETPOINT.

UPON A RISE IN HOT WATER LOOP DIFFERENTIAL PRESSURE BELOW SETPOINT, AS SENSED BY THE HOT WATER LOOP DIFFERENTIAL PRESSURE SENSORS, THE BAS SHALL CONTROL THE PUMP'S VFD TO SLOWLY DECREASE SPEED TO MAINTAIN SETPOINT.

HW TEMPERATURE CONTROL:

BAS SHALL RESET THE LEAVING HW TEMPERATURE SUPPLY OF HX-1 BASED ON OUTDOOR AIR TEMPERATURE WITH ALL VALUES BEING ADJUSTABLE. THE SETPOINT SHALL BE LINEARLY RESET FROM 120°F AT OR ABOVE 65°F TO 180°F AT OR BELOW 20°F.

STEAM CONTROL VALVE V-1 SHALL BE MODULATED TO MAINTAIN HOT WATER SUPPLY TEMPERATURE SETPOINT.

LOW TEMPERATURE ALARM:
IF THE HEATING HOT WATER DROPS 10°F BELOW ITS SETPOINT OF 180°F A LOW HOT WATER TEMPERATURE ALARM WILL BE SENT TO THE BAS.

EMERGENCY AIR DISTRIBUTION SHUTOFF:

WHEN EMERGENCY SWITCH IS ACTIVATED, THE HOT WATER PUMPS SHALL BE DE-ENERGIZED AND THE STEAM CONTROL VALVE SHALL CLOSE.
ON A DROP IN CHILLER WATER FLOW BELOW SETPOINT AS SENSED BY A FLOW METER, THE BYPASS VALVE V-BYP SHALL MODULATE TO DIVERT FLOW FROM THE SECONDARY LOOP TO THE PRIMARY LOOP TO MAINTAIN SETPOINT.

REV	DATE	DESCRIPTION	DRAWN	APPRD
B	01JUL10	ISSUED FOR BID	SJL	CDS
A	11MAY10	ISSUED FOR REVIEW	SJL	CDS

AIR MOBILITY COMMAND
DOVER AIR FORCE BASE, DELAWARE

TITLE: REPAIR RESERVE HEADQUARTERS FACILITY 202

SUBMITTED	APPROVED	APPROVED
CHIEF ENGINEER	CHIEF ENGINEER	COMMANDER

DATE:	PROJECT #:	PLOT SCALE:	DRAWN BY:	DESIGNED BY:
4-30-10	049002	AS NOTED	WWR	JRF

HW SYSTEM CONTROL DIAGRAMS & SEQUENCE OF OPERATION

W-4497

SHT 32 OF 57

M9

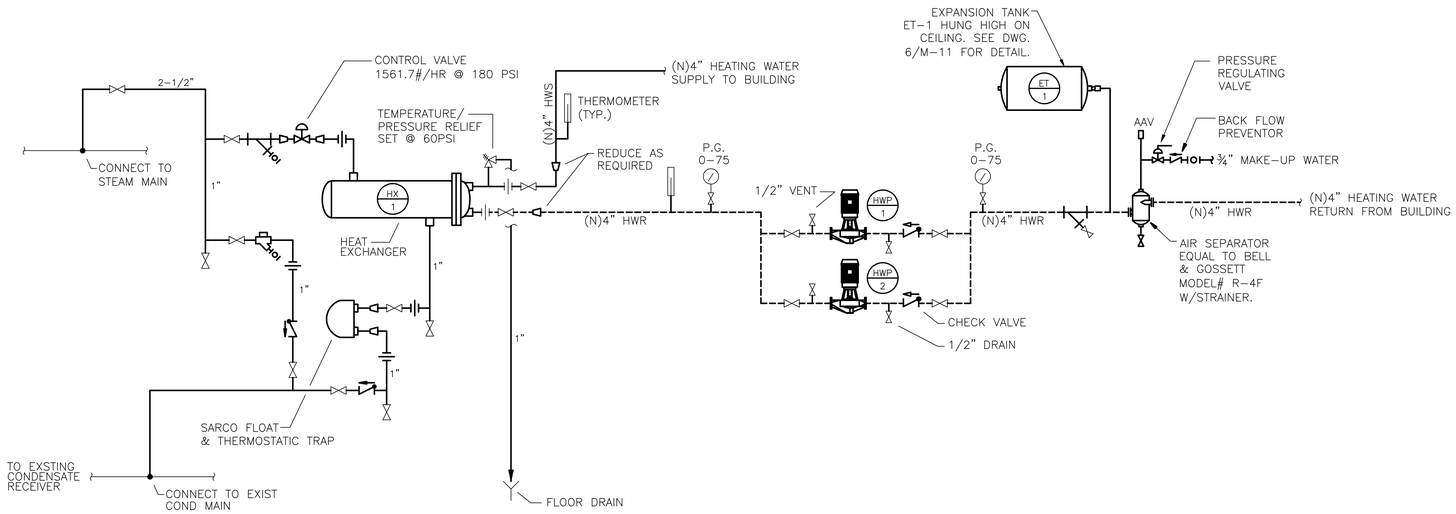

HEATING HOT WATER PIPING FLOW DIAGRAM

NTS

1 M10 M10

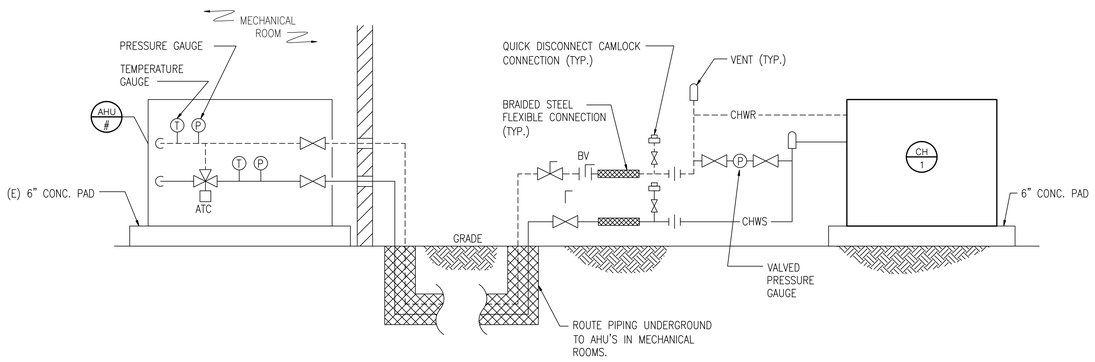

CHILLED WATER PIPING FLOW DIAGRAM

NTS

2 M10 M10

REV	DATE	DESCRIPTION	DRAWN	APPRD
B	01JUL10	ISSUED FOR BID	SJL	CDS
A	11MAY10	ISSUED FOR REVIEW	SJL	CDS

AIR MOBILITY COMMAND
DOVER AIR FORCE BASE, DELAWARE

TITLE: REPAIR RESERVE HEADQUARTERS FACILITY 202

SUBMITTED	APPROVED	APPROVED
CHIEF ENGINEER	CHIEF ENGINEER	COMMANDER

DATE:	PROJECT #:	PLOT SCALE:	DRAWN BY:	DESIGNED BY:
4-30-10	049002	AS NOTED	WWR	JRF

MECHANICAL PIPING DIAGRAMS

W-4497

SHT 33 OF 57

M10

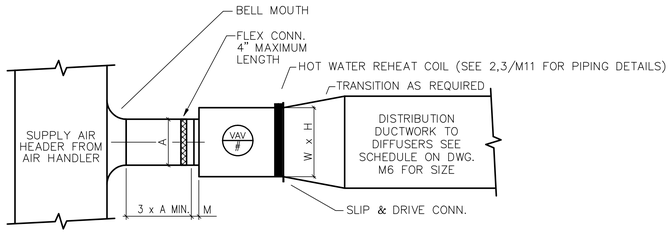

TYPICAL VAV BOX INSTALLATION

1 | MII | MII

NTS

NOTES:

1. CONTRACTOR SHALL CAULK ALL SEAMS ON VAV BOXES WITH SILICONE SEALANT.
2. PROVIDED ACCESS DOORS ON BOTH SIDES OF HEATING COILS.

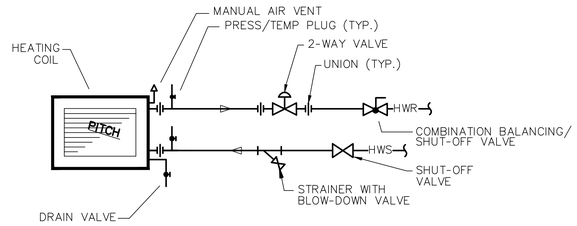

VAV HOT WATER REHEAT COIL PIPING DIAGRAM W/ 2-WAY CONTROL VALVE

2 | MII | MII

NTS

NOTES:

1. INSULATE ALL HOT WATER SUPPLY AND RETURN PIPING.
2. REHEAT COIL VALVE SHALL FAIL NORMALLY OPEN.
3. FLUSH STRAINER AFTER CLEANING PIPING SYSTEM AND PRIOR TO TURNING OVER SYSTEM AT COMPLETION OF WORK.

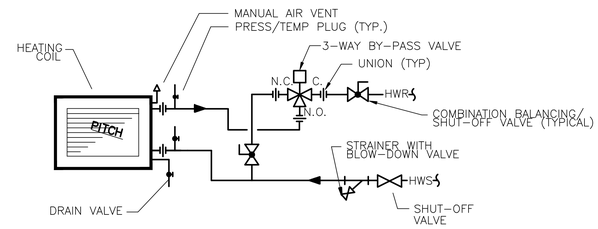

VAV HOT WATER REHEAT COIL PIPING DIAGRAM W/ 3-WAY CONTROL VALVE

3 | MII | MII

NTS

NOTES:

1. INSULATE ALL HOT WATER SUPPLY AND RETURN PIPING.
2. REHEAT COIL VALVE SHALL FAIL NORMALLY OPEN.
3. FLUSH STRAINER AFTER CLEANING PIPING SYSTEM AND PRIOR TO TURNING OVER SYSTEM AT COMPLETION OF WORK.

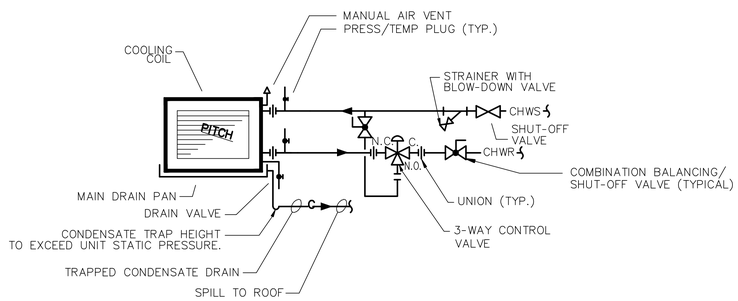

AHU CHILLED WATER COIL PIPING DIAGRAM

4 | MII | MII

NTS

NOTES:

1. FLUSH STRAINER AFTER CLEANING PIPING SYSTEM AND PRIOR TO TURNING OVER SYSTEM AT COMPLETION OF WORK.
2. CHILLED WATER COIL SHALL BE PROVIDED WITH FREEZE PUMP.
3. ALL COIL DRAIN VALVES SHALL BE BALL VALVES.

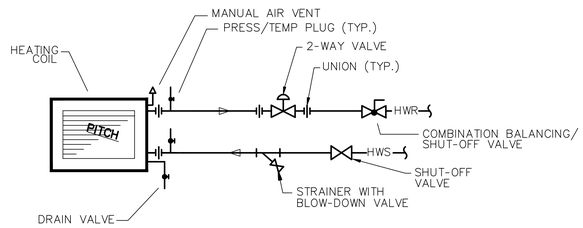

AHU HOT WATER COIL PIPING DIAGRAM

5 | MII | MII

NTS

NOTES:

1. FLUSH STRAINER AFTER CLEANING PIPING SYSTEM AND PRIOR TO TURNING OVER SYSTEM AT COMPLETION OF WORK.
2. HOT WATER COIL SHALL BE PROVIDED WITH FREEZE PUMP.
3. ALL COIL DRAIN VALVES SHALL BE BALL VALVES.

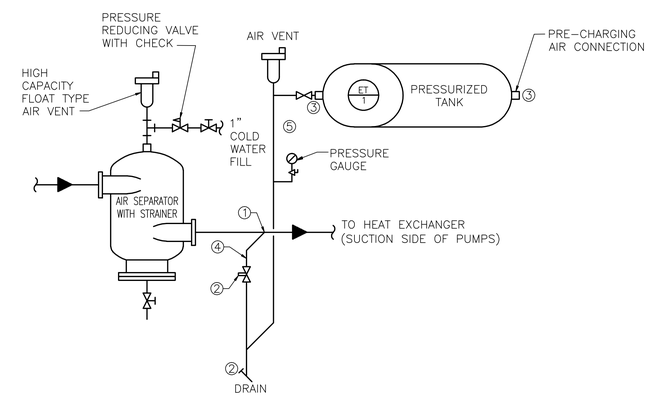

HORIZONTAL TANK DETAIL W/ AIR SEPARATOR

6 | MII | MII

NTS

NOTES:

1. CONNECT TO SIDE OF MAIN. AVOID TOP OR BOTTOM CONNECTION TO PREVENT AIR OR DEBRIS FROM ENTERING PIPE TO TANK.
2. SHUT-OFF VALVE AND DRAIN VALVE REQUIRED TO PROPERLY PRECHARGE TANK.
3. TANK CONNECTION LOCATIONS MAY VARY DEPENDING ON TANK SIZE AND MODEL.
4. PROVIDE ANTI-THERMO-SYPHON LOOP TO PREVENT GRAVITY HEATING OF TANK. 12" MINIMUM DROP.
5. INSERT TEE HERE FOR SYSTEM WATER CONNECTION OF PARALLEL TANKS (IF USED).

REV	DATE	DESCRIPTION	DRAWN	APPRD
B	01JUL10	ISSUED FOR BID	SJL	CDS
A	11MAY10	ISSUED FOR REVIEW	SJL	CDS

AIR MOBILITY COMMAND
DOVER AIR FORCE BASE, DELAWARE

TITLE: REPAIR RESERVE HEADQUARTERS FACILITY 202

SUBMITTED	APPROVED	APPROVED		
CHIEF ENGINEER	CHIEF ENGINEER	COMMANDER		
DATE: 4-30-10	PROJECT #: 049002	PLOT SCALE: AS NOTED	DRAWN BY: WWR	DESIGNED BY: JRF

MECHANICAL DETAILS (1 OF 2)

W-4497

SHT 34 OF 57

M11

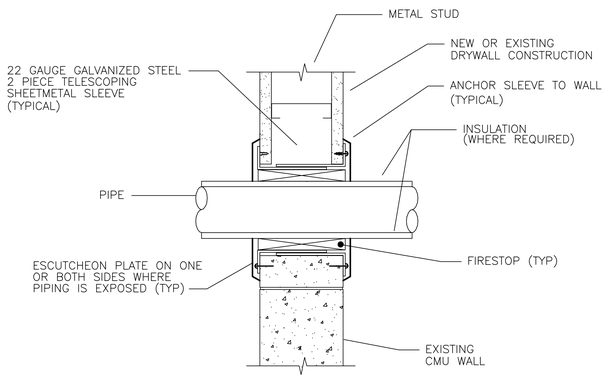

PIPE SLEEVE - WALL PENETRATION DETAIL (1 / M12 M12)

NTS

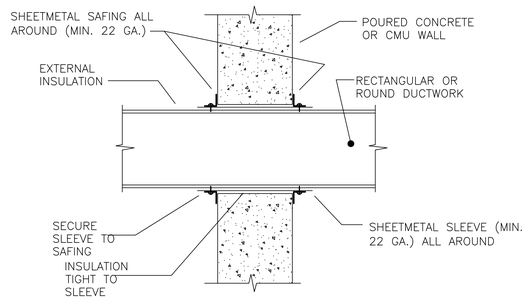

NOTE: INTERIOR WALLS REQUIRE SAFING ON ONE SIDE ONLY ON CONCEALED DUCTS AND ON BOTH SIDES OF WALL ON EXPOSED DUCTS.

DUCT PENETRATION DETAIL (2 / M12 M12)

NTS

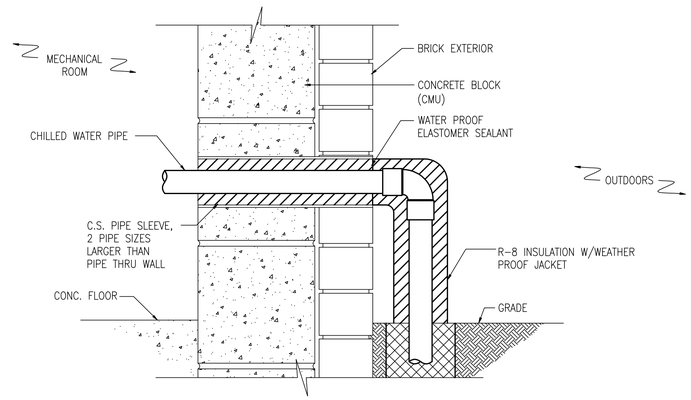

CHILLED WATER PIPE SLEEVE PENETRATION (3 / M12 M12)

NTS

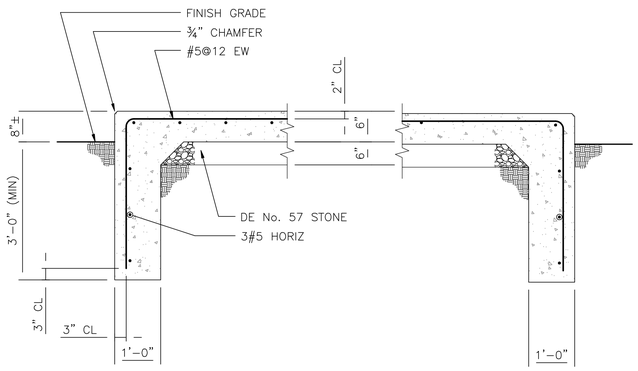

EXTERIOR CONCRETE EQUIPMENT PAD DETAIL (4 / M12 M12)

¾"=1'-0"

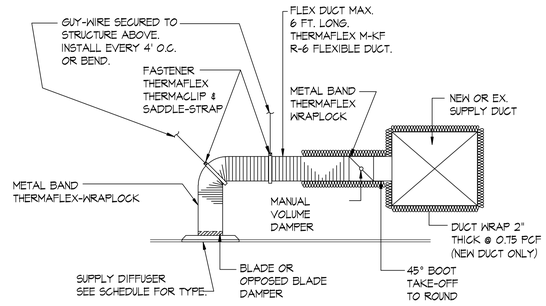

BRANCH DISTRIBUTION DETAIL (5 / M12 M12)

NTS

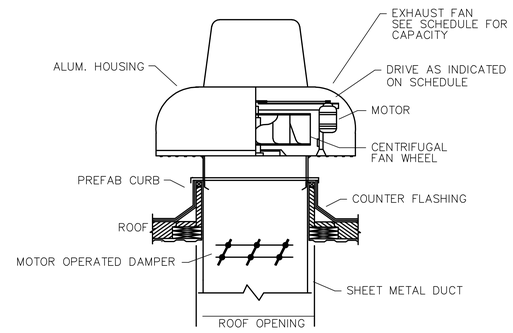

POWER ROOF VENTILATOR (6 / M12 M12)

NTS

REV	DATE	DESCRIPTION	DRAWN	APPRD
B	01JUL10	ISSUED FOR BID	SJL	CDS
A	11MAY10	ISSUED FOR REVIEW	SJL	CDS

AIR MOBILITY COMMAND
DOVER AIR FORCE BASE, DELAWARE

TITLE: REPAIR RESERVE HEADQUARTERS FACILITY 202

SUBMITTED	APPROVED	APPROVED		
CHIEF ENGINEER	CHIEF ENGINEER	COMMANDER		
DATE: 4-30-10	PROJECT #: 049002	PLOT SCALE: AS NOTED	DRAWN BY: WWR	DESIGNED BY: JRF

MECHANICAL DETAILS (2 OF 2)

W-4497

SHT 35 OF 57

M12

DRAWING NOTES:

1) FOR GENERAL NOTES AND LEGENDS SEE DRAWING MP-0.

2) UNLESS OTHERWISE NOTED, ALL PIPING SHOWN IS EXISTING TO REMAIN.

DEMOLITION NOTES:

1. REMOVE FIXTURE, COLD & HOT WATER PIPING.
2. NOTE NOT USED
3. NOTE NOT USED
4. REMOVE COLD AND/OR HOT WATER PIPING CUT AND CAP AS MARKED.
5. REMOVE ELECTRIC HOT WATER HEATER.
6. REMOVE PLUMBING FIXTURE & CAP PIPING UNDERGROUND OR BELOW FLOOR/BEHIND WALL

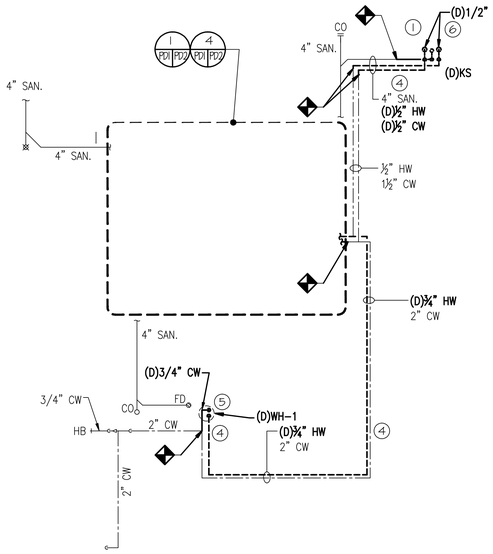

PN

FIRST FLOOR PLUMBING DEMOLITION PLAN

SCALE 1/8"=1'-0"

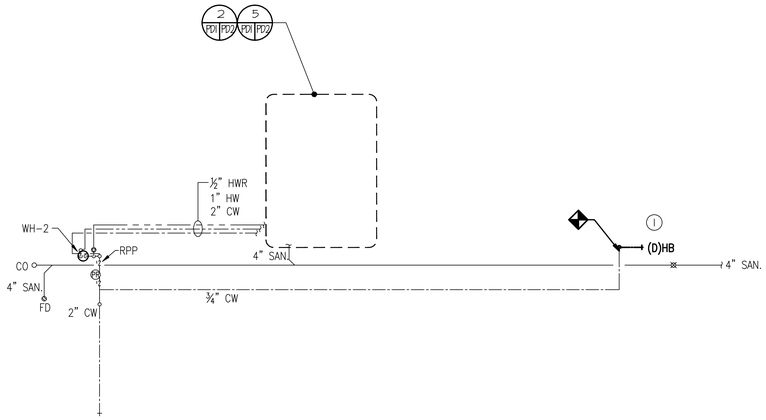

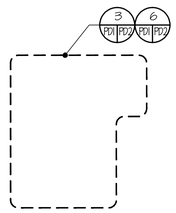

PN

SECOND FLOOR PLUMBING DEMOLITION PLAN

SCALE 1/8"=1'-0"

REV	DATE	DESCRIPTION	DRAWN	APPRD
B	01JUL10	ISSUED FOR BID	SJL	CDS
A	11MAY10	ISSUED FOR REVIEW	SJL	CDS

AIR MOBILITY COMMAND
DOVER AIR FORCE BASE, DELAWARE

TITLE: REPAIR RESERVE HEADQUARTERS FACILITY 202

SUBMITTED	APPROVED	APPROVED
CHIEF ENGINEER	CHIEF ENGINEER	COMMANDER

DATE:	PROJECT #:	PLOT SCALE:	DRAWN BY:	DESIGNED BY:
4-30-10	049002	AS NOTED	WWR	JRF

PLUMBING DEMOLITION FLOOR PLANS

W-4497

SHT 36 OF 57

PD1

DRAWING NOTES:

1) FOR GENERAL NOTES AND LEGENDS SEE DRAWING MP-0.
2) UNLESS OTHERWISE NOTED, ALL PIPING SHOWN IS EXISTING TO REMAIN.

DEMOLITION NOTES:

1. REMOVE FIXTURE, COLD & HOT WATER PIPING.
2. REMOVE FIXTURE, COLD & HOT WATER PIPING TO WALL STUBS.
3. REMOVE COUNTER TOP.
4. REMOVE COLD AND/OR HOT WATER PIPING CUT AND CAP AS MARKED.
5. REMOVE SHOWER BASE.
6. REMOVE PLUMBING FIXTURE & CAP UNDERGROUND OR BELOW FLOOR/BEHIND WALL.
7. REMOVE DRINKING FOUNTAIN.
8. REMOVE MOP BASIN.
9. NOTE NOT USED
10. REMOVE DRAIN, WASTE OR VENT PIPE.
11. REMOVE PLUMBING FIXTURE, USE EXISTING SANITARY FOR FUTURE FLOOR DRAIN.

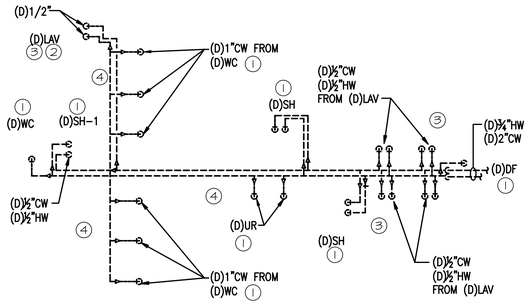

FIRST FLOOR BATHROOM
SERVICE PIPING DEMOLITION PLAN (1 PD1 PD2)
NTS

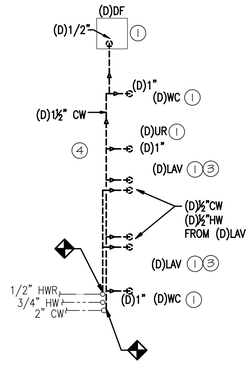

FIRST FLOOR BATHROOM
SERVICE PIPING DEMOLITION PLAN (2 PD1 PD2)
NTS

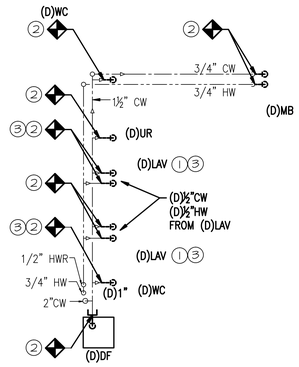

SECOND FLOOR BATHROOM
SERVICE PIPING DEMOLITION PLAN (3 PD1 PD2)
NTS

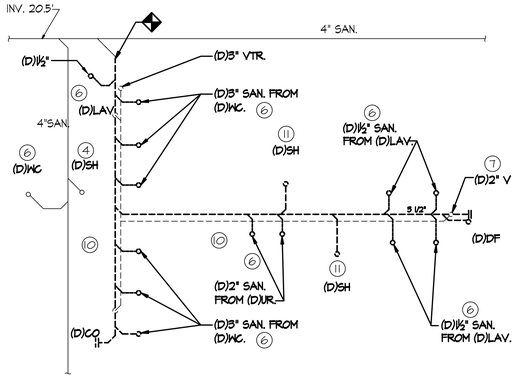

FIRST FLOOR BATHROOM
SANITARY PIPING DEMOLITION PLAN (4 PD1 PD2)
NTS

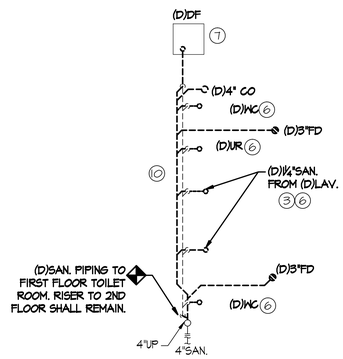

FIRST FLOOR BATHROOM
SANITARY PIPING DEMOLITION PLAN (5 PD1 PD2)
NTS

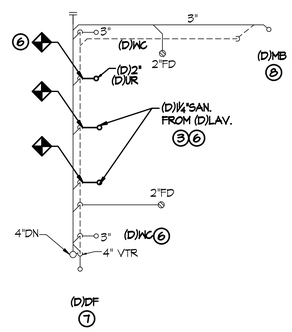

SECOND FLOOR BATHROOM
SANITARY PIPING DEMOLITION PLAN (6 PD1 PD2)
NTS

REV	DATE	DESCRIPTION	DRAWN	APPRD
B	01JUL10	ISSUED FOR BID	SJL	CDS
A	11MAY10	ISSUED FOR REVIEW	SJL	CDS

AIR MOBILITY COMMAND
DOVER AIR FORCE BASE, DELAWARE

TITLE: REPAIR RESERVE HEADQUARTERS FACILITY 202

SUBMITTED	APPROVED	APPROVED
CHIEF ENGINEER	CHIEF ENGINEER	COMMANDER

DATE:	PROJECT #:	PLOT SCALE:	DRAWN BY:	DESIGNED BY:
4-30-10	049002	AS NOTED	WWR	JRF

PLUMBING DEMOLITION PARTIAL FLOOR PLANS

W-4497

SHT 37 OF 57

PD2

DRAWING NOTES:

1) FOR GENERAL NOTES AND LEGENDS SEE DRAWING MP-0.
2) UNLESS OTHERWISE NOTED, ALL PIPING SHOWN IS EXISTING TO REMAIN.

CONSTRUCTION NOTES:

1. INSTALL DOMESTIC HOT WATER PIPING. INSULATE HOT WATER PIPING PER SPECIFICATIONS.
2. INSTALL DOMESTIC COLD WATER PIPING. INSULATE PER SPECIFICATIONS.
3. INSTALL HOT WATER HEATER. SEE DWG. 2/P4 FOR DETAIL.
4. INSTALL HOT WATER RECIRCULATING PUMP W/ISOLATION VALVES.
5. INSTALL HOT WATER RETURN PIPING. INSULATE PER SPECIFICATIONS.

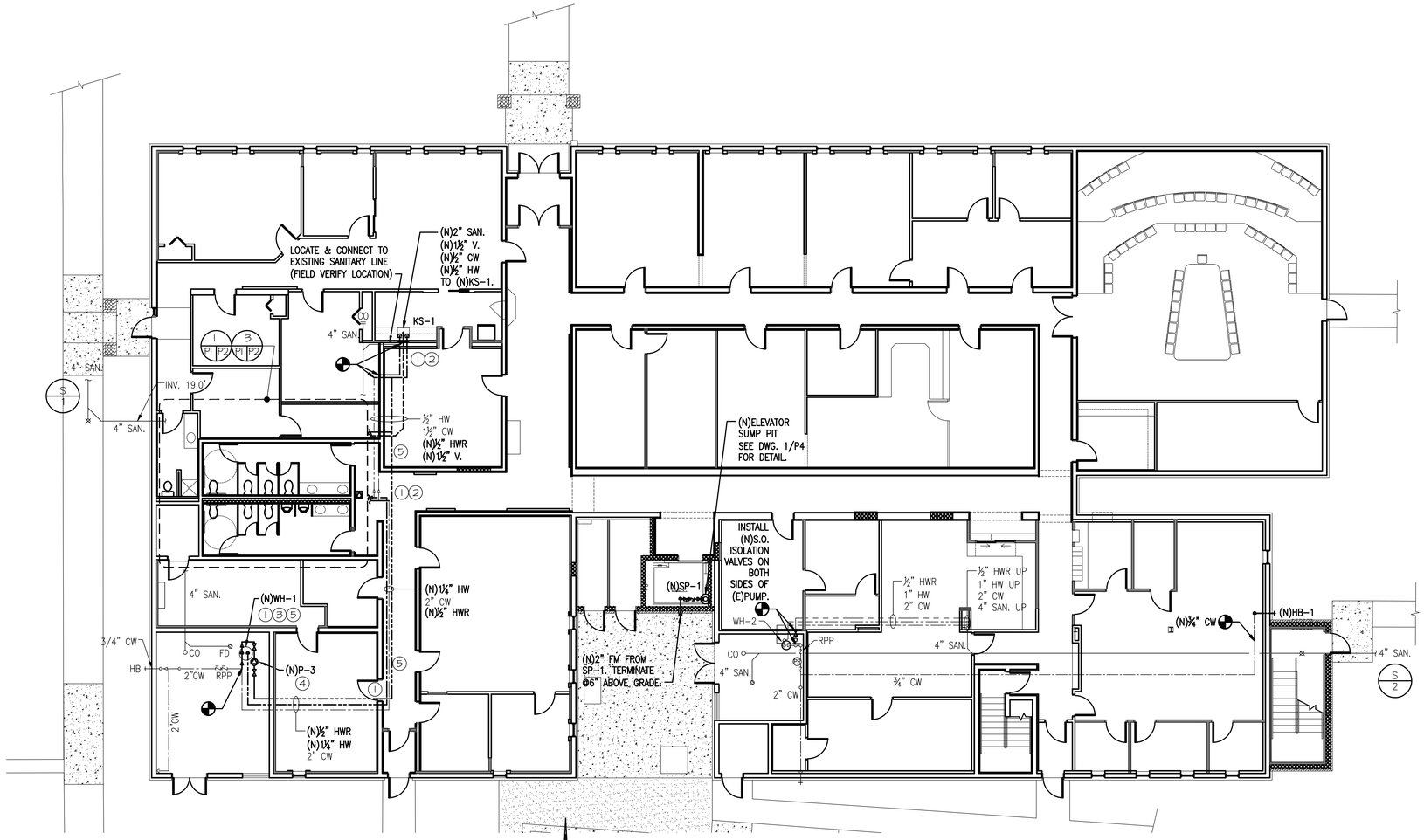

FIRST FLOOR PLUMBING PLAN

SCALE 1/8"=1'-0"

PN

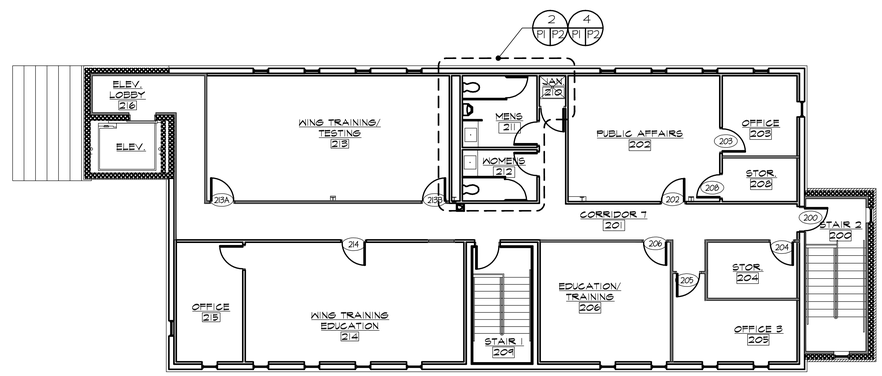

SECOND FLOOR PLUMBING PLAN

SCALE 1/8"=1'-0"

PN

REV	DATE	DESCRIPTION	DRAWN	APPRD
2	01JUL10	ISSUED FOR BID	SJL	CDS
1	11MAY10	ISSUED FOR REVIEW	SJL	CDS

AIR MOBILITY COMMAND
DOVER AIR FORCE BASE, DELAWARE

TITLE: REPAIR RESERVE HEADQUARTERS FACILITY 202

SUBMITTED	APPROVED	APPROVED
CHIEF ENGINEER	CHIEF ENGINEER	COMMANDER

DATE:	PROJECT #:	PLOT SCALE:	DRAWN BY:	DESIGNED BY:
4-30-10	049002	AS NOTED	WWR	JRF

PLUMBING FLOOR PLANS

W-4497

SHT 38 OF 57

P1

DRAWING NOTES:

1) FOR GENERAL NOTES AND LEGENDS SEE DRAWING MP-0.
2) UNLESS OTHERWISE NOTED, ALL PIPING SHOWN IS EXISTING TO REMAIN.

CONSTRUCTION NOTES:

1. INSTALL WATER CLOSET. UTILIZE (E) SANITARY ROUGH-IN PIPING. MODIFY AS REQUIRED.
2. INSTALL MOP BASIN. UTILIZE (E) ROUGH-IN PIPING. MODIFY AS REQUIRED.
3. INSTALL SHOWER VALVE.
4. INSTALL SHOWER FIBERGLASS BASE.
5. INSTALL WATER HAMMER ARRESTOR ON COLD WATER SUPPLY PIPING. PROVIDE ACCESS PANEL IN WALL.

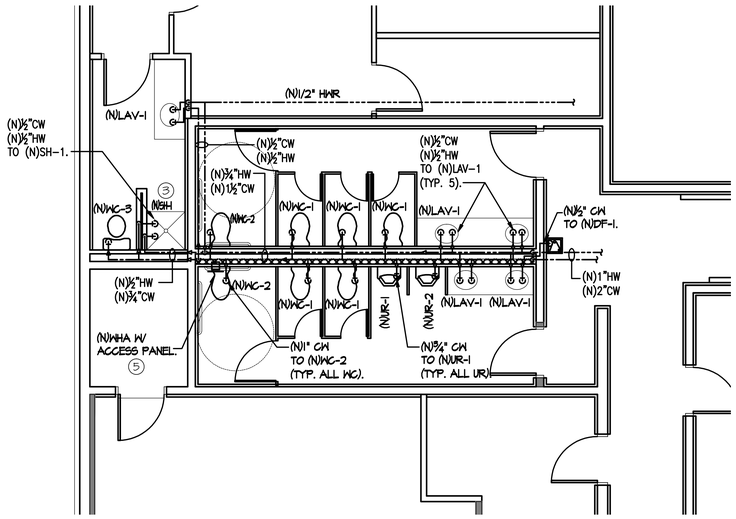

FIRST FLOOR BATHROOM SERVICE PIPING PLAN (1 / P1 P2)
NTS

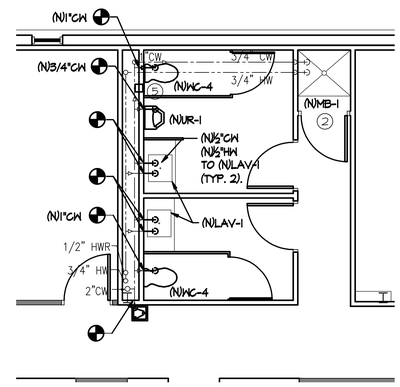

SECOND FLOOR BATHROOM SERVICE PIPING PLAN (2 / P1 P2)
NTS

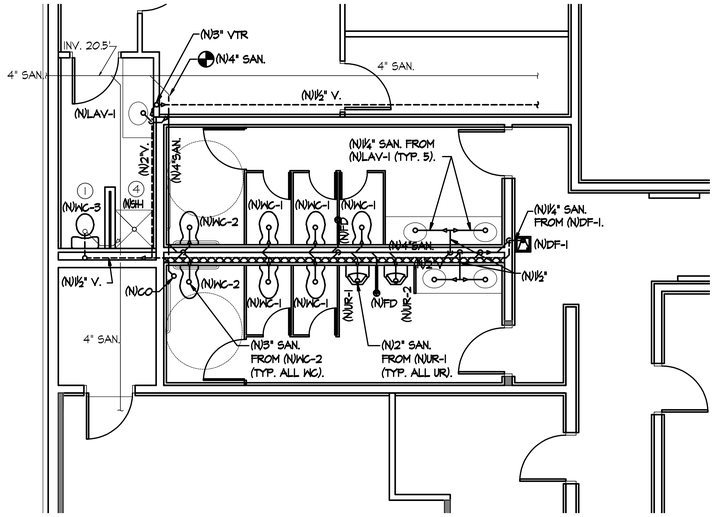

FIRST FLOOR BATHROOM SANITARY PIPING PLAN (3 / P1 P2)
NTS

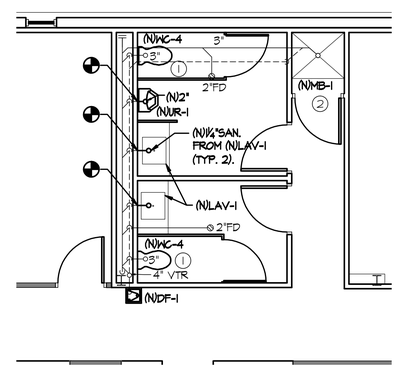

SECOND FLOOR BATHROOM SANITARY PIPING PLAN (4 / P1 P2)
NTS

REV	DATE	DESCRIPTION	DRAWN	APPRD
B	01JUL10	ISSUED FOR BID	SJL	CDS
A	11MAY10	ISSUED FOR REVIEW	SJL	CDS

AIR MOBILITY COMMAND
DOVER AIR FORCE BASE, DELAWARE

TITLE: REPAIR RESERVE HEADQUARTERS FACILITY 202

SUBMITTED	APPROVED	APPROVED
CHIEF ENGINEER	CHIEF ENGINEER	COMMANDER

DATE:	PROJECT #:	PLOT SCALE:	DRAWN BY:	DESIGNED BY:
4-30-10	049002	AS NOTED	WWR	JRF

PLUMBING PARTIAL FLOOR PLANS

W-4497 P2

SHT 39 OF 57

DRAWING NOTES:

1) FOR GENERAL NOTES AND LEGENDS SEE DRAWING MP-0.

2) UNLESS OTHERWISE NOTED, ALL PIPING SHOWN IS EXISTING TO REMAIN.

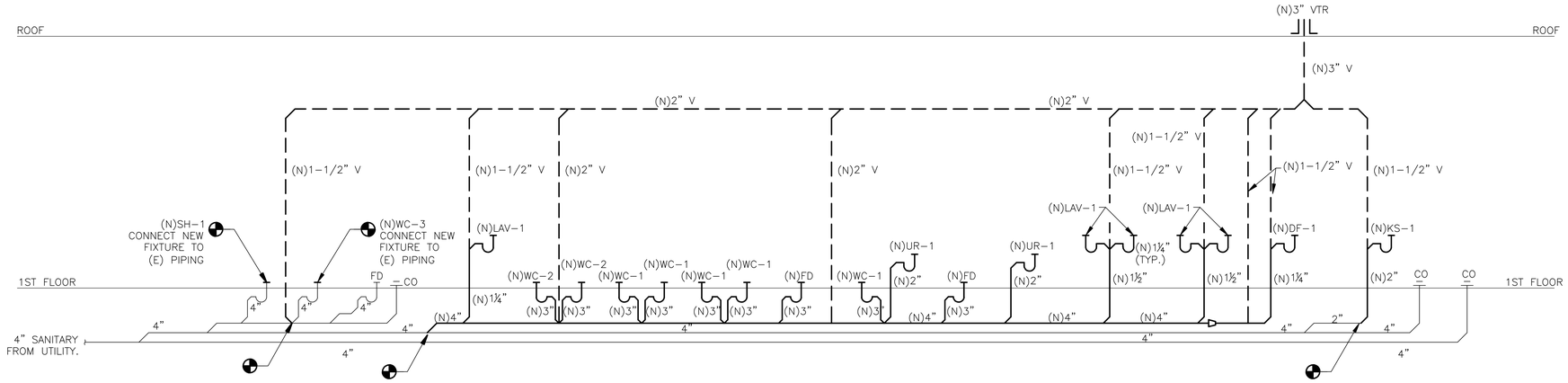

SANITARY RISER DIAGRAM S-1

NTS

P3 | P3

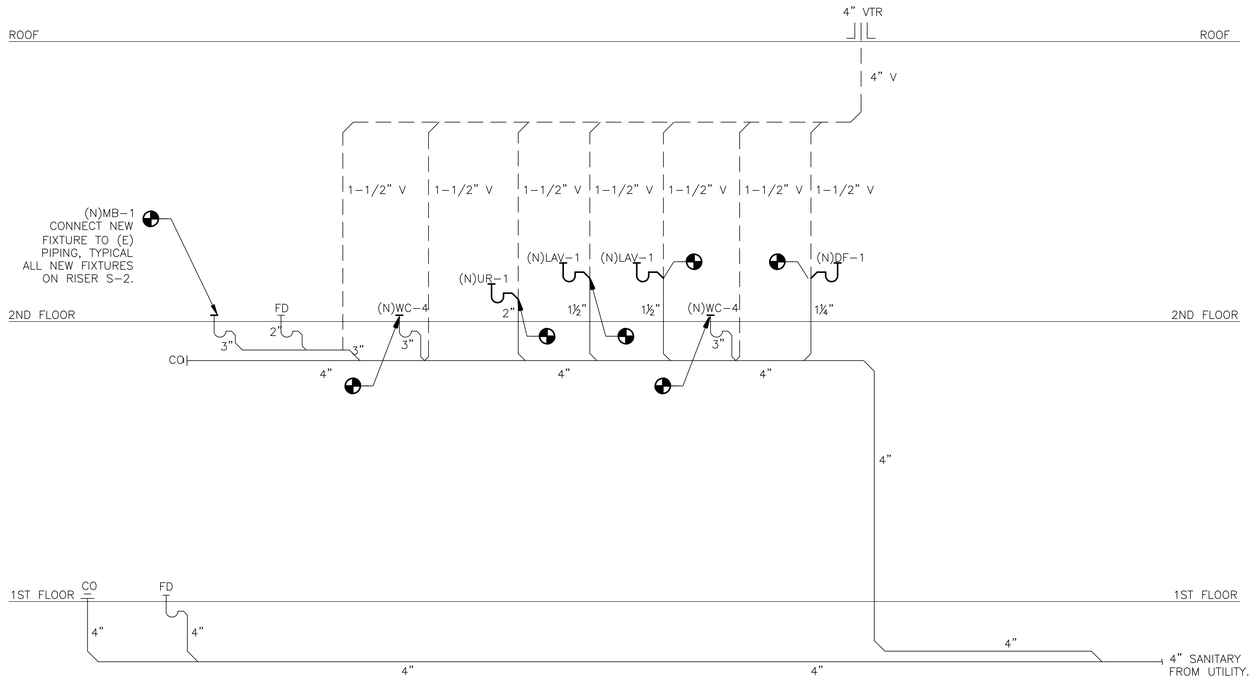

SANITARY RISER DIAGRAM S-2

NTS

2 | P3 | P3

REV	DATE	DESCRIPTION	DRAWN	APPRD
B	01JUL10	ISSUED FOR BID	SJL	CDS
A	11MAY10	ISSUED FOR REVIEW	SJL	CDS

AIR MOBILITY COMMAND
DOVER AIR FORCE BASE, DELAWARE

TITLE: REPAIR RESERVE HEADQUARTERS FACILITY 202

SUBMITTED	APPROVED	APPROVED
CHIEF ENGINEER	CHIEF ENGINEER	COMMANDER

DATE:	PROJECT #:	PLOT SCALE:	DRAWN BY:	DESIGNED BY:
4-30-10	049002	AS NOTED	WWR	JRF

PLUMBING SANITARY RISER DIAGRAMS

W-4497

SHT 40 OF 57

P3

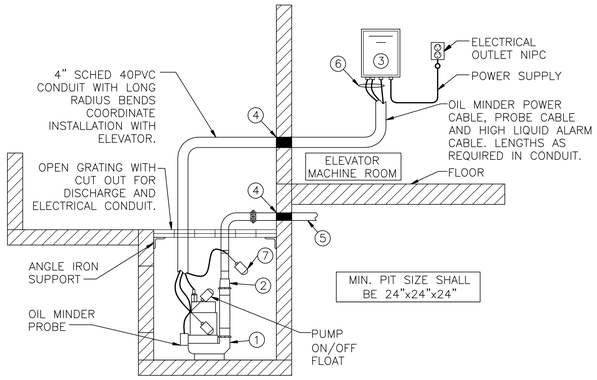

1. SUBMERSIBLE EFFLUENT PUMP
2. CHECK VALVE
3. OIL MINDER 115V, 1 PHASE CONTROL SYSTEM WITH BUILT IN AUDIBLE AND VISUAL ALARM WHEN PUMP DOES NOT RUN DUE TO OIL IN PIT OR HIGH LIQUID CONDITION. PROVIDE SILENCING BUTTON FOR AUDIBLE ALARM BUILT INTO PANEL. PANEL SHALL HAVE ADDITIONAL CONTACT FOR A REMOTE ALARM LOCATION.
4. WATERTIGHT SLEEVE
5. ALL BURIED PUMP PRESSURE DISCHARGE PIPING SHALL BE PROTECTED WITH TAPECOAT CT CORROSION PROTECTION TAPE.
6. OIL MINDER POWER CABLE, PROBE CABLE, AND HIGH LIQUID ALARM CABLE. (16' STANDARD LENGTH)
7. OIL MINDER POWER CABLE, PROBE CABLE, AND HIGH LIQUID ALARM CABLE.

ELEVATOR SUMP PUMP DETAIL

NTS

1 / P4 P4

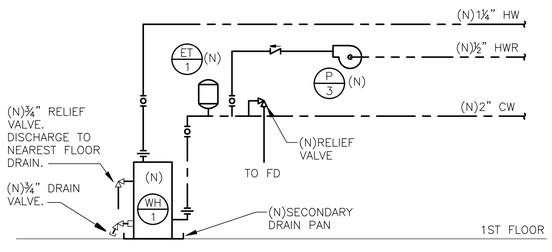

WATER HEATER PIPING DIAGRAM

NTS

2 / P4 P4

PLUMBING FIXTURE SCHEDULE

FIXTURE ID	FIXTURE NAME	MANUFACTURER	MODEL	TYPE	MOUNT	VALVE	ACCESSORIES	REMARKS
WC-1	WATER CLOSET	KOHLER	KINGSTON K-4325	WALL MOUNT	15" HIGH	FLUSHVALVE K-10956 (1.28 GPF)	STRONGHOLD K-4731-C ELONGATED OPEN SEAT	
WC-2	WATER CLOSET	KOHLER	KINGSTON K-4325	WALL MOUNT	17-1/8" HIGH	FLUSHVALVE K-10956 (1.28 GPF)	STRONGHOLD K-4731-C ELONGATED OPEN SEAT	ADA UNIT
WC-3	WATER CLOSET	KOHLER	WELLWORTH K-3505	FLOOR MOUNT	15" HIGH	FLUSHTANK 1.4 GPF	LUSTRA K-4650 ELONGATED OPEN SEAT	
WC-4	WATER CLOSET	KOHLER	WELLWORTH K-4406	FLOOR MOUNT	15" HIGH	FLUSHVALVE K-10956 (1.28 GPF)	STRONGHOLD K-4731-C ELONGATED OPEN SEAT	
UR-1	URINAL	KOHLER	DEXTER K-5016-ET	WALL MOUNT	RIM 24" AFF	K-10958 (0.5 GPF)	-	
UR-2	URINAL	KOHLER	DEXTER K-5016-ET	WALL MOUNT	RIM 16" AFF	K-10958 (0.5 GPF)	-	ADA UNIT
LAV-1	LAVATORY	KOHLER	PENNINGTON K-2196	COUNTERTOP SELF-RIMMING	MOUNT MINIMUM 21" AFF	TRITON K-7443-KE	LEVER HANDLES K-16012-4 WATTS L-1170 MIXING VALVE TRUBRO LAV GUARD 2	ADA UNIT
KS-1	KITCHEN SINK	KOHLER	LYRIC K-3283-4	4 HOLE SELF-RIMMING	KITCHEN COUNTER	FORTÉ K-10412 POLISHED CHROME	K-8801 DUOSTRAINER WATTS 1170 MIXING VALVE	ADA FAUCET
DF-1	WATER COOLER	SUNROC	NWCA-8	BARRIER FREE	WALL MOUNT	FRONT AND SIDE PUSH BARS	115 / 60 / 4.5 FLA	ADA UNIT
SH-1	SHOWER	KOHLER	REPLACE SHOWER BASE	NEW FIBERGLASS BASE	MATCH EXISTING	TRITON K-T6910-4A	PRESSURE BALANCING VALVE K-304-KP	ADA UNIT
MB-1	MOP BASIN	ACORN	TSH-24	STD. HEIGHT	FLOOR	KOHLER KINLOCK K-8907	MOP HANDLE BRACKET AND HOSE WATTS 1170 MIXING VALVE	ADA UNIT
HB-1	HOSE BIBB	WOODFORD	B67	NON-FREEZE	MOUNT MINIMUM 18" ABOVE GRADE	-	-	NON-FREEZE, SELF-DRAINING, W/ INTERGRAL BACKFLOW PREVENTER, KEY OPERATED ENCLOSURE, & ¾" OUTLET.
FD	FLOOR DRAIN	J. R. SMITH	2006Y-P050	3" OUTLET	FLOOR	-	ROUND STRAINER	

HOT WATER RECIRCULATING PUMP SCHEDULE

ITEM	MANUFACTURER	MODEL	FLOW GPM	MAX HEAD FT.	ELECTRIC	MOTOR HP	CONNECTION	WEIGHT LBS.	NOTES
P-3	BELL & GOSSETT	PR AB	1.0	17	115/1/60	1/6	3/4" NPT	32.0	#1

#1 - INSTALL WITH STRAINER ON SUCTION SIDE.

WATER HEATER SCHEDULE

ITEM	MFG.	MODEL NO.	CAPACITY GALS.	POWER KW	INSULATION	NUMBER ELEMENTS	ELECTRIC	FLA	SIZE	NOTES
WH-1	STATE WATER HEATERS	CSB 120 12 IFE	120	12.0	R-16	3	208/3/60	25.0	29-1/2" D X 62" H	NEW
WH-2	LOCKINVAR	ETX030KK-1	30	4.5	-	2	-	-	-	EXISTING

SUMP PUMP SCHEDULE

ITEM	MANUFACTURER	MODEL	LOCATIONS	SIZE	OUTLET	FLOW	ELECTRICAL	DIMENSIONS	WEIGHT	NOTES
SP-1	STANCOR	0/M SE 50 ELV	ELEVATOR PIT	1/2 HP	2"	25 GPM @ 35'	115V / 5.0A / 60 HZ	9.1"Ø x 16.2" H	30.8 LBS.	PROVIDE WITH STANCOR OIL MINDER CONTROL SYSTEM. SEE DWG. 1/P3 FOR DETAIL.

EXPANSION TANK SCHEDULE

ITEM	MANUFACTURER	MODEL	VOLUME (GAL.)	ACCEPTANCE (GAL.)	HEIGHT (IN.)	DIAMETER (IN.)	NOTES
ET-1	BELL & GOSSETT	PTA-12	6.4	3.2	15.5	12	LOCATE IN MECH. ROOM WITH WH-1.

DRAWING NOTES:

1) FOR GENERAL NOTES AND LEGENDS SEE DRAWING MP-0.

REV	DATE	DESCRIPTION	DRAWN	APPRD
2	01JUL10	ISSUED FOR BID	SJL	CDS
1	11MAY10	ISSUED FOR REVIEW	SJL	CDS

AIR MOBILITY COMMAND
DOVER AIR FORCE BASE, DELAWARE

TITLE: REPAIR RESERVE HEADQUARTERS FACILITY 202

SUBMITTED: CHIEF ENGINEER | APPROVED: CHIEF ENGINEER | APPROVED: COMMANDER

DATE: 4-30-10 | PROJECT #: 049002 | PLOT SCALE: AS NOTED | DRAWN BY: WWR | DESIGNED BY: JRF

PLUMBING EQUIPMENT SCHEDULES & DETAILS

W-4497

SHT 41 OF 57

P4

ABBREVIATIONS

A	AMP
A/C	AIR CONDITIONING
AC	ALTERNATING CURRENT
AFF	ABOVE FINISHED FLOOR
AHU	AIR HANDLING UNIT
AWG	AMERICAN WIRING GAUGE
BATT	BATTERY
C	CONDUIT
℄	CENTERLINE
CU	CONDENSING UNIT
EDH	ELECTRIC DUCT HEATER
EM	EMERGENCY
EMT	ELECTRICAL METALLIC TUBING
EWC	ELECTRIC WATER COOLER
FC	FOOTCANDLES
FRS	FREEZE STAT
FST	FIRE STAT
GC	GENERAL CONTRACTOR
GDH	GAS DUCT HEATER
GFCI	GROUND FAULT CIRCUIT INTERRUPT
GND	GROUND
Hz	HERTZ (CYCLE/SECOND)
HOA	HANDS OFF AUTO
H/D	HEAVY DUTY
Hp	HORSEPOWER
HV	HIGH VOLTAGE
JB	JUNCTION BOX
KW	KILOWATT
LA	LIGHTNING ARRESTER
MCC	MOTOR CONTROL CENTER
NC	NORMALLY CLOSED
NEC	NATIONAL ELECTRICAL CODE
NF	NON-FUSED
NFPA	NATIONAL FIRE PROTECTION ASSN.
NL	NIGHT LIGHT
NO	NORMALLY OPEN
NTS	NOT TO SCALE
PL	PILOT LIGHT
PNL	PANEL
PWR.	POWER
SW	SWITCH
SWBD	SWITCHBOARD
SWGR	SWITCHGEAR
UH	UNIT HEATER
UPS	UNINTERRUPTABLE POWER SERVICE
UON	UNLESS OTHERWISE NOTED
V	VOLT
W/	WITH
WH	WATER HEATER
W/O	WITHOUT
WP	WEATHER PROOF
XFMR	TRANSFORMER
XP	EXPLOSION PROOF
ø	EXPLOSION PROOF

CONTROL DEVICES

S S_2 S_3 S_4	SINGLE POLE, 2-POLE, 3-WAY, 4-WAY TOGGLE SWITCHES, RESPECTIVELY. FLUSH MOUNT
S_K S_P	KEY OPERATED, OR SWITCH WITH PILOT LIGHT, RESPECTIVELY, OR OF TYPE INDICATED. FLUSH MOUNT
S_D S_{D_3} S_{D_4}	DIMMER SWITCH, OF TYPE INDICATED. FLUSH MOUNT
LS	LIMIT SWITCH
VS	VIBRATION SWITCH
	NON-FUSED SAFTY DISCONNECT SWITCH
	FUSED SAFETY DISCONNECT SWITCH
PE	PHOTO ELECTRIC EYE
	PUSH BUTTON STATION, START AND STOP
	COMBINATION MOTOR STARTER
S_m	FRACTIONAL HORSE POWER MANUAL STARTER W/O THERMAL OVERLOADS
O_S	OCCUPANCY SENSOR
S_{EM}	SINGLE POLE EMERGENCY SHUTDOWN SWITCH
M	MOTORIZED DAMPER
R	RELAY

LIGHTING FIXTURES

	EXIT FIXTURE, CEILING MOUNT
	WALL/CEILING MOUNTED EXIT SIGN
	DIRECTIONAL ARROW
	DOWNLIGHT-RECESSED CLG.
	RECESSED FIXTURE
	RECESSED ADJUSTABLE
	SURFACE PENDANT
	PENDANT
	CHANDLER
	SCONCE
	SCONCE, DAMP LOCATION
	WALL INCANDESCENT PORCELAIN FIXTURE
	CEILING INCANDESCENT PORCELAIN FIXTURE
	52" COMBINATION CEILING & LIGHT FIXTURE FAN
	GROUND MOUNTED FLOOD LIGHT
H	WALL SCONCE
	SUBSCRIPT (H) DESIGNATES LIGHT FIXTURE TYPE
	UNDER CABINET LIGHTING
NL	SUBSCRIPT (NL) NIGHT LIGHT
A	2'x4' FLUORESCENT FIXTURE
	SUBSCRIPT (A) DESIGNATES LIGHT FIXTURE TYPE
A	2'x4' FLUORESCENT FIXTURE DEMOLITION
A	EXISTING FIXTURE TO REMAIN
	1'x4' FLUORESCENT FIXTURE
	1'x8' FLUORESCENT FIXTURE
EM	2'x2' FLUORESCENT FIXTURE
	SUBSCRIPT (EM) EMERGENCY LIGHT FIXTURE BALLAST
	EMERGENCY LIGHT
	DOUBLE FLOOD LIGHT
B	SURFACE MOUNT FIXTURE
	SUBSCRIPT (NL) LIGHT LIGHT
	24" LIGHTING WALL STRIP
	36" LIGHTING WALL STRIP
	48" LIGHTING WALL STRIP

POWER DEVICES

	SIMPLEX RECEPTACLE, 125 VOLT, 20 AMP GROUNDING TYPE, FLUSH MOUNTED
	DUPLEX RECEPTACLE, 125 VOLT, 20 AMP GROUNDING TYPE, MOUNT 18" A.F.F.
WP	DUPLEX RECEPTACLE, 125 VOLT, 20 AMP WEATHER PROOF COVER, MOUNT 18" A.F.F.
GFCI	DUPLEX RECEPTACLE, 125 VOLT, 20 AMP GROUND FAULT CIRCUIT, INTERRUPTER
C	DUPLEX RECEPTACLE, 125 VOLT, 20 AMP GROUNDING TYPE, MOUNT ON CEILING
D	DUPLEX RECEPTACLE, 125 VOLT, 20 AMP GROUNDING TYPE, MOUNT ON INSIDE FIXED CABINET 6" FROM TOP
H	DUPLEX RECEPTACLE, 125 VOLT, 20 AMP GROUNDING TYPE, MOUNT 6" ABOVE COUNTER
	DOUBLE DUPLEX RECEPTACLE, 125 VOLT, 20 AMP GROUNDING TYPE.
	POWER AND DATA DROP FOR MODULAR FURNITURE. EACH DROP IS TO BE A 4 11/16" JUNCTION BOX WITH 1 1/2" CONDUIT STUBBING UP 6" ABOVE DROP CEILING. COORDINATE LOCATION WITH FURNITURE CONTRACTOR, ARCHITECT AND CONSTRUCTION MANAGER
	DUPLEX RECEPTACLE, 125 VOLT, 20 AMP GROUNDING TYPE, FLOOR MOUNT-BRASS
EPS	ELECTRICAL POWER STRIP DUPLEX OUTLETS
J	FLOOR JUNCTION BOX
J	JUNCTION BOX
	ELECTRIC RACEWAY
L1-1	HOME RUN TO PANEL- PANEL TAG & CIRCUIT NUMBER
HT	HEAT TAPE, ELECTRIC
	ELECTRIC RACEWAY UNDER FLOOR CONSTRUCTION
	ELECTRIC PANEL
EDH	ELECTRIC DUCT HEATER
A 1	MOTOR-TYPE TAG NUMBER

SIGNAL DEVICES

	MOTION DETECTOR
G	GLASS BREAKAGE DETECTOR
KP	ALARM KEYPAD
EL	ELECTRIC LOCK
REX	REQUEST TO EXIT
FCP	FIRE CONTROL PANEL
FP	MANUAL FIRE PROTECTION PULL STATION
C	SIGNAL CHIMEBELL
S A	SMOKE DETECTOR
	SUBSCRIPT (A) DESIGNATES SMOKE ALARM FIXTURE TYPE
CO	CARBON MONOXIDE DETECTOR
	DOOR CONTACT
R	CARD READER
	FIXED CCTV CAMERA
	SINGLE F-81 COAX WALL PLATE, 75 OHM RG6 CABLE JACK, MOUNT 18" AFF, COLOR WHITE, WITH CONDUIT STUB IN CEILING SPACE.
	VOICE OUTLET: RJ-14 JACK, 1-PORT SINGLE PIECE WALL PLATE, MOUNT 18" AFF, COLOR WHITE WITH CONDUIT STUB IN CEILING SPACE
	VOICE/DATA OUTLET: RJ-14 & CAT 6, RJ-45 JACK, 2-PORT SINGLE PIECE WALL PLATE, MOUNT 18" AFF, COLOR WHITE, WITH CONDUIT STUB IN CEILING SPACE.
	VOICE OUTLET: RJ-14 JACK, BRASS FLOOR PLATE
	VOICE/DATA OUTLET: RJ-14 & CAT 6, RJ-45 JACK, BRASS FLOOR PLATE
	ALARM HORN
	ALARM STROBE & HORN
	DOOR BELL SWITCH
	SPEAKER - WALL MOUNT
C	SPEAKER - CEILING MOUNT

NOTE: ALL DASHED LINES (----) ON DEMOLITION DRAWINGS INDICATE ITEMS FOR DEMOLITION

ELECTRICAL SYSTEM NOTES

THE WORK OF THIS SECTION INCLUDES, BUT IS NOT NECESSARILY LIMITED TO ALL LABOR, MATERIAL AND EQUIPMENT REQUIRED TO BE INSTALLED FOR A PROPERLY OPERATING ELECTRICAL SYSTEM AS A WHOLE. THIS ALSO INCLUDES CONDUIT SLEEVES, PANELS, IDENTIFICATION, RECORD DRAWINGS, INSTALLATION PERMITS, TESTS, INSPECTIONS BY GOVERNING AUTHORITIES, ELECTRICAL WORK OF CERTAIN TEMPORARY FACILITIES AND SERVICES, CUTTING AND PATCHING WORK, START-UP OF ELECTRICAL SYSTEMS AND EQUIPMENT, TRAINING OF OWNER'S OPERATING PERSONNEL, OPERATING AND MAINTENANCE MANUALS, FINAL CLEANING OF ELECTRICAL WORK, AND SIMILAR WORK. THE FOLLOWING IS A LIST OF ELECTRICAL ITEMS TO BE INCLUDED, BUT WORK IS NOT LIMITED TO THESE ITEMS:

CONTRACTOR SHALL OBTAIN CERTIFICATE OF FINAL INSPECTION AND APPROVAL BY AN ELECTRICAL INSPECTIONS AGENCY, DEMONSTRATING THAT THE WORK IS IN COMPLIANCE WITH THE NATIONAL ELECTRICAL CODE AS RECOGNIZED BY AUTHORITY HAVING JURISDICTION (AHJ) AND ALL OTHER AGENCIES HAVING JURISDICTION. ON GOING WORK MAY BE REVIEWED BY THE OWNER OR ITS REPRESENTATIVE. WORK SHALL NOT BE DEEMED COMPLETE UNTIL SUCH CERTIFICATES HAVE BEEN DELIVERED TO THE OWNER. PERMITS, LICENSES AND TIE-IN CHARGES THAT MAY BE REQUIRED BY THE AHJ TO PERFORM THE WORK SHALL BE SECURED AND PAID FOR BY THE CONTRACTOR. THE CONTRACTOR SHALL GIVE ALL NOTICES AND COMPLY WITH ALL LAWS, ORDINANCES, RULES, AND REGULATIONS BEARING ON THE CONDUCT OF HIS WORK. THE FOLLOWING STANDARDS AND CODES SHALL BECOME A PART OF THESE CONSTRUCTION NOTES AS THOUGH WRITTEN OUT IN FULL AND SHALL BE COMPLIED WITH:

STATE AND LOCAL BUILDING CODES
NATIONAL FIRE PROTECTION ASSOCIATION (NFPA NO. 70).
AWS STANDARDS FOR WELDING.
ANSI C 2 NATIONAL ELECTRICAL SAFETY CODE.
MANUFACTURER'S WRITTEN INSTRUCTIONS AND CATALOG DATA FURNISHED WITH OR PERTAINING TO EQUIPMENT SUPPLIED ON THIS PROJECT
NATIONAL ELECTRICAL CODE (NEC)
UNDERWRITERS LABORATORIES REQUIREMENTS
LIFE SAFETY CODE (NFPA-101)
OCCUPATIONAL SAFETY AND HEALTH ACT (OSHA)
ANSI C 73 DIMENSIONS OF ATTACHMENT PLUGS AND RECEPTACLES.
NECA STANDARDS FOR INSTALLATION.
NEMA STANDARDS FOR MATERIALS AND PRODUCTS.

BIDDERS ARE DIRECTED TO VISIT THE SITE AND FULLY INFORM THEMSELVES OF THE CONDITIONS UNDER WHICH THE WORK MUST BE PERFORMED. ALL TIE-IN POINTS AND EXISTING CONDITIONS INDICATED IN THE DRAWINGS ARE FOR GENERAL INFORMATION ONLY. THE CONTRACTOR SHALL VERIFY ALL SUCH CONDITIONS TO HIS SATISFACTION BEFORE BID OPENING. THE CONTRACTOR SHALL THOROUGHLY EXAMINE THE DRAWINGS, CHECK ON ALL DIMENSIONS IMMEDIATELY AFTER THE CONTRACT IS AWARDED AND OBTAIN SUCH MEASUREMENTS AND INFORMATION AS MAY BE REQUIRED TO CARRY ON THE WORK. ANY DISCREPANCIES ON THE DRAWING SHALL BE REPORTED.

COORDINATION OF ELECTRICAL WORK: IT IS RECOGNIZED THAT THE CONTRACT DOCUMENTS ARE DIAGRAMMATIC IN SHOWING CERTAIN PHYSICAL RELATIONSHIPS WHICH MUST BE ESTABLISHED WITHIN THE ELECTRICAL WORK, AND IN ITS INTERFACE WITH OTHER WORK INCLUDING UTILITIES AND MECHANICAL WORK, AND THAT SUCH ESTABLISHMENT IS THE EXCLUSIVE RESPONSIBILITY OF THE CONTRACTOR. ARRANGE ELECTRICAL WORK IN A NEAT, WELL ORGANIZED MANNER WITH CONDUIT AND SIMILAR SERVICES RUNNING PARALLEL WITH PRIMARY LINES OF THE BUILDING CONSTRUCTION, AND WITH A MINIMUM OF 8'-0" OVERHEAD CLEARANCE WHERE POSSIBLE. LOCATE OPERATING AND CONTROL EQUIPMENT PROPERLY TO PROVIDE EASY ACCESS, AND ARRANGE ENTIRE ELECTRICAL WORK TO PROVIDE ADEQUATE ACCESS FOR OPERATION AND MAINTENANCE. ADVISE OTHER TRADES OF OPENINGS REQUIRED IN THEIR WORK FOR SUBSEQUENT MOVE-IN OF LARGE UNITS OF ELECTRICAL WORK OR EQUIPMENT. FOR LOCATIONS WHERE SEVERAL ELEMENTS OF ELECTRICAL (OR COMBINED MECHANICAL AND ELECTRICAL) WORK MUST BE SEQUENCED AND POSITIONED WITH PRECISION IN ORDER TO FIT INTO THE AVAILABLE SPACE, PREPARE COORDINATION DRAWINGS (SHOP DRAWINGS) SHOWING THE ACTUAL PHYSICAL DIMENSION (AT ACCURATE SCALE) REQUIRED FOR THE INSTALLATION.

PREPARE AND SUBMIT COORDINATION DRAWINGS PRIOR TO PURCHASE, FABRICATION, OR INSTALLATION OF ANY OF THE ELEMENTS INVOLVED IN THE COORDINATION. IN THE EVENT OF DISCREPANCIES BETWEEN THE ELECTRICAL DISTRIBUTION SYSTEM AS SHOWN AND THE MECHANICAL EQUIPMENT AS SHOWN OR SPECIFIED, THE MECHANICAL DRAWINGS AND SPECIFICATIONS SHALL GOVERN, AND THE ELECTRICAL CONTRACTOR SHALL MODIFY HIS DISTRIBUTION EQUIPMENT AS NECESSARY TO PROVIDE THE PROPER CONNECTION FOR THE SATISFACTORY AND INTENDED OPERATION OF THE ITEM OR SYSTEM. IN THE EVENT THAT THE MECHANICAL CONTRACTOR MAKES CHANGES FROM THE CONTRACT DOCUMENTS, ALL EXPENSES INVOLVED BY THESE CHANGES SHALL BE BORNE BY THAT CONTRACTOR.

CONNECTIONS TO OWNER'S EQUIPMENT AND EQUIPMENT PROVIDED UNDER OTHER CONTRACTS: ELECTRICAL CONTRACTOR SHALL PROVIDE COMPLETE ROUGHING-IN AND FINAL CONNECTION TO EACH ITEM OF ELECTRICALLY OPERATED EQUIPMENT ASSOCIATED WITH EQUIPMENT PROVIDED BY THE OWNER OR UNDER OTHER CONTRACTS. ALL ELECTRICAL RACEWAYS PROVIDED BY THE ELECTRICAL CONTRACTOR ARE TO BE INSTALLED CONCEALED INSIDE THE EQUIPMENT WIRING SPACES OR ATTACHED TO INSIDE EQUIPMENT STRUCTURE USING FLEXIBLE METAL RACEWAYS WITH SPECIFIED POWER CIRCUIT CONDUCTORS PLUS SEPARATED EQUIPMENT GROUND CONDUCTOR. EQUIPMENT VENDORS TO PROVIDE REQUIRED CUT-OUTS AND HOLES IN EQUIPMENT FOR INSTALLATION OF ELECTRICAL EQUIPMENT, DEVICES, BOXES, PLATES AND RACEWAYS BY THE ELECTRICAL CONTRACTOR. CONTRACTOR TO PROVIDE ENGINEER ALL FIXTURE AND EQUIPMENT SUBMITTALS FOR REVIEW. ALL ELECTRICAL ROUGHING-IN AND CONNECTIONS TO BE MADE-ONLY FROM CERTIFIED APPROVED VENDOR'S SHOP DRAWINGS.

DEMOLITION AND REMOVAL: DEMOLITION AND REMOVAL OF EXISTING ELECTRICAL SERVICE ENTRANCE, METERING EQUIPMENT SHALL BE REMOVED BY ELECTRICAL CONTRACTOR. ALL- INTERIOR ELECTRICAL DISTRIBUTION SYSTEM(S) INCLUDING SPECIAL SYSTEMS SHALL BE REMOVED BY PROJECT GENERAL CONTRACTOR.

COMPATIBILITY: PROVIDE PRODUCTS WHICH ARE COMPATIBLE WITH OTHER PRODUCTS OF THE ELECTRICAL WORK, AND WITH OTHER WORK REQUIRING INTERFACE WITH THE ELECTRICAL WORK, INCLUDING ELECTRICAL CONNECTIONS AND CONTROL DEVICES. FOR EXPOSED ELECTRICAL WORK, COORDINATE COLORS AND FINISHES WITH OTHER WORK. ALL MATERIAL SHALL BE NEW AND UL OR APPROVED BY THE ENGINEER.

MEASUREMENTS: ALL MEASUREMENTS SHALL BE VERIFIED AT THE SITE. NO EXTRAS WILL BE ALLOWED FOR DIFFERENCE BETWEEN ACTUAL MEASUREMENTS AND THOSE INDICATED ON THE DRAWINGS.

LOCATIONS: THE LAYOUT OF WIRING AS SHOWN ON THE DRAWINGS SHALL NOT BE CONSIDERED AS ABSOLUTE UNLESS SO STATED HEREIN IT SHALL BE SUBJECT TO SUCH CHANGES AS WILL FACILITATE ERECTING THE WORK, OR, WHERE NECESSARY, WILL OVERCOME OBSTACLES IN BUILDING CONSTRUCTION. WHERE AS MAJOR DEVIATION FROM THE PLANS IS INDICATED BY PRACTICAL CONSIDERATIONS, THE CONTRACTOR SHALL SUBMIT SHOP DRAWINGS SHOWING ALL DEVIATIONS IN SUCH DETAIL AS WILL CLOSELY INDICATE THE NECESSITY FOR THE CHANGE. EXAMINE THE LAYOUT AND STRUCTURAL DRAWINGS AND DETAILS FOR PLACEMENT OF ALL OUTLETS, LIGHTING, POWER AND SPECIAL PANELS TO PROPERLY COORDINATE THEM WITH RELATION TO CABINETS, TABLES, BENCHES, STRUCTURAL PANELS, TRIMS, MOLDINGS, ETC. EXAMINE ALL OTHER MECHANICAL DRAWINGS, SHOP DRAWINGS, CATALOG CUTS, ETC., FOR SPECIAL APPARATUS FOR WHICH CONTRACTOR MUST ROUGH-IN AND TO WHICH HE MUST CONNECT OUTLETS, APPARATUS AND CONNECTIONS THERETO WHICH ARE IMPROPERLY LOCATED THROUGH FAILURE TO FOLLOW THE ABOVE INSTRUCTIONS SHALL BE SUBJECT TO CORRECTION AND/OR RELOCATION WITHOUT EXTRA CHARGE.

REFER TO SPECIFICATIONS FOR MORE COMPLETE INFORMATION

SLEEVES: PROVIDE AND INSTALL ALL SLEEVES WHICH ARE REQUIRED TO PROTECT THIS EQUIPMENT OR WHICH MAY BE NECESSARY TO FACILITATE ITS INSTALLATION. SLEEVES USED IN CONJUNCTION WITH FORMED CONCRETE WHERE CONCEALED, SHALL BE OF RUST-RESISTANT SHEET IRON, AND WHERE EXPOSED THEY SHALL BE GALVANIZED STEEL PIPE. SLEEVES THROUGH MASONRY SHALL BE GALVANIZED STEEL PIPE. EXTERIOR WALL AND ROOF PENETRATIONS SHALL BE FLASHED, COUNTER-FLASHED AND SEALED WEATHER TIGHT AND WATER PROOF. PROVIDE FIRE STOPPING AT ALL FIRE WALL/CEILING/FLOOR PENETRATIONS (SEE ARCHITECTURAL DRAWINGS OR CONTACT ENGINEER FOR INFORMATION).

MOTOR APPARATUS DATA: BEFORE INSTALLING WIRING OR MOTORS, STARTERS, APPARATUS, APPLIANCES, ETC., THIS CONTRACTOR WILL CAREFULLY CHECK THE ARCHITECTURAL AND MECHANICAL AND ALL OTHER DRAWINGS AS WELL AS THE ELECTRICAL DRAWINGS TO INSURE THAT NO OUTLET OR WIRING IS OMITTED. HE SHALL CONSULT ALL PARTIES FURNISHING EQUIPMENT AND OBTAIN FROM THEM DATA, SHOP DRAWINGS, CATALOG CUTS AND INFORMATION NECESSARY FOR PROPERLY CONNECTING THE EQUIPMENT. CONTRACTOR SHALL DETERMINE THE NUMBER AND KIND OF INTERLOCKS AND CONTROL STATIONS REQUIRED FOR PROPER FUNCTION OF ALL BUILDING EQUIPMENT BEFORE PLACING ORDER FOR THE CONTROL APPARATUS.

ROTATION: THIS CONTRACTOR SHALL BE RESPONSIBLE FOR CORRECT ROTATION OF ALL MOTORS.

TESTING ADJUSTING-AND CLEANING: AFTER THE INSTALLATION OF APPARATUS AND WIRING HAS BEEN COMPLETED, ALL ELECTRICAL CONDUCTORS SHALL BE TESTED BY THE ELECTRICAL CONTRACTOR TO INSURE CONTINUITY, PROPER SPLICING, FREEDOM FROM UNWANTED GROUNDS AND INSULATION VALUES IN ACCORDANCE WITH THE NATIONAL ELECTRICAL CODE REQUIREMENTS. THE ELECTRICAL CONTRACTOR SHALL FURNISH AND USE SUITABLE INSTRUMENTS IN MAKING ALL TESTS. PRELIMINARY CHECKING WITH MAGNETO WILL BE PERMITTED BUT WILL NOT BE ACCEPTED IN OBTAINING FINAL RESULTS WHICH SHALL BE OBTAINED BY A MODEL 5000 MEGGER METER. PANELBOARD CIRCUITS SHALL BE CONNECTED TO OBTAIN A LOAD BALANCE BETWEEN CIRCUITS OF PLUS OR MINUS 10% UNDER FULL LOAD CONDITIONS, THE CONTRACTOR SHALL PROVIDE EVIDENCE OF THIS PHASE BALANCE FOR APPROVAL BEFORE MAKING FINAL CONNECTIONS IN THE PANELBOARD. PROVIDE TO THE ENGINEER THREE (3) COPIES OF THE ABOVE TEST RESULTS FOR APPROVAL. UPON COMPLETION OF THE WORK, ALL COMPONENT PARTS BOTH SINGULARLY AND AS A WHOLE SHALL BE ADJUSTED AND LEFT IN SATISFACTORY OPERATING CONDITION. ALL PARTS OF THE WIRING SYSTEM, INCLUDING SWITCHES AND OTHER AUXILIARIES SHALL BE TESTED AND PROVED FREE OF UNWANTED GROUNDS OR OTHER DEFECTS. ALL OVERLOAD DEVICES INCLUDING EQUIPMENT FURNISHED UNDER OTHER CONTRACTS SHALL BE SET AND ADJUSTED TO SUIT THE LOAD CONDITIONS, WHICH LOAD CONDITIONS SHALL BE DETERMINED WITH SUITABLE INSTRUMENTS BY THIS CONTRACTOR. ALL PARTS OF THE INSTALLATION INCLUDING LIGHTING FIXTURES, PANELBOARDS, ETC., SHALL BE CLEANED, ADJUSTED OR WIPED AND ADJUSTED TO THE SATISFACTION OF THE ENGINEER.

EQUIPMENT START UP: TEST RUN ELECTRICAL EQUIPMENT IN COORDINATION WITH TEST RUNS OF MECHANICAL SYSTEMS. CLEAN AND LUBRICATE OPERATIONAL EQUIPMENT. INSTRUCT OWNER'S OPERATING PERSONNEL THOROUGHLY IN THE OPERATION, SEQUENCING, MAINTENANCE AND SAFETY/EMERGENCY PROVISIONS OF THE ELECTRICAL SYSTEMS. TURN OVER THE OPERATIONS TO THE OWNER'S PERSONNEL AT THE TIME(S) OF THE TOTAL WORK OF THE CONTRACT, RESPOND PROMPTLY WITH CONSULTATION AND SERVICES TO ASSIST THE OWNER'S PERSONNEL WITH OPERATION OF ELECTRICAL SYSTEMS. A CERTIFICATE OF FINAL INSPECTION AND APPROVAL BY AN ELECTRICAL INSPECTION AGENCY, LICENSED IN THE STATE OF DELAWARE SHALL BE SUBMITTED TO THE OWNER. THE ELECTRICAL CONTRACTOR SHALL PAY THE COSTS FOR ALL INSPECTIONS.

A. IDENTIFICATION: ALL ITEMS OF ELECTRICAL EQUIPMENT SHALL HAVE IDENTIFYING NAMEPLATES INDICATING FUNCTION, VOLTAGE AND SUPPLY CIRCUIT NUMBER. EXPOSED CONDUITS CONTAINING CONDUCTORS OPERATING AT GREATER THAN 250 VOLTS SHALL HAVE ORANGE MARKERS WITH BLACK LETTERS INSTALLED AT EACH JUNCTION BOX AND ON 25' CENTERS IDENTIFYING THE OPERATING VOLTAGE. RECEPTACLES OPERATING AT VOLTAGES OTHER THAN 120V, 60HZ SHALL HAVE VOLTAGE IDENTIFICATION NAMEPLATE. WIRE AND CABLE SHALL HAVE VOLTAGE IDENTIFICATION NAMEPLATE. WIRE AND CABLE SHALL HAVE IDENTIFYING PLASTIC OR FIBER TAGS IN ALL JUNCTION BOXES AND PANELBOARDS. ALL RELAY CABINETS OR CONTROL PANELS WITH MORE THAN ONE ELECTRICAL SOURCE SHALL HAVE ALL CIRCUITS CLEARLY MARKED TO IDENTIFY THE SOURCE OF EACH CIRCUIT. ALL NON-PERTINENT STICKERS, VENDOR'S MARKINGS (OTHER THAN PERMANENT NAMEPLATE, EQUIPMENT IDENTIFICATION, ERECTION MARKING, ETC.), SHALL BE REMOVED FROM EQUIPMENT.

WARRANTY: CONTRACTOR SHALL PROVIDE THE OWNER WITH A GUARANTEE TO REPAIR AND/OR REPLACE ALL EQUIPMENT AND SYSTEMS AGAINST DEFECTIVE MATERIALS AND WORKMANSHIP FOR ONE YEAR FROM THE DATE OF ACCEPTANCE. UPON WRITTEN NOTICE AND NO EXPENSE TO THE OWNER, CONTRACTOR SHALL CORRECT THE DEFECT OR WORKMANSHIP ISSUE.

ALL WIRING DEVICES, FIXTURES, SWITCHES AND MATERIALS ARE TO MEET SITE STANDARD AND BE PRE-APPROVED BY THE SITE REPRESENTATIVE AND THE ENGINEER PRIOR TO PURCHASE. RECEPTACLES ARE TO MEET NEMA WD 6, TOGGLE SWITCHES ARE TO MEET EIA 480, PANELS ARE TO MEET NEMA PB-1 & 250 AND OUTLET BOXES TO MEET NEMA FB 1 & NEMA OS 1.

REV	DATE	DESCRIPTION	DRAWN	APPRD
2	01JUL10	ISSUED FOR BID	SJL	CDS
1	11MAY10	ISSUED FOR REVIEW	SJL	CDS

AIR MOBILITY COMMAND
DOVER AIR FORCE BASE, DELAWARE

TITLE: REPAIR RESERVE HEADQUARTERS FACILITY 202

SUBMITTED	APPROVED	APPROVED
CHIEF ENGINEER	CHIEF ENGINEER	COMMANDER

DATE:	PROJECT #:	PLOT SCALE:	DRAWN BY:	DESIGNED BY:
4-30-10	049002	AS NOTED	MJP	MJM

ELECTRICAL NOTES AND LEGENDS

W-4497

SHT 42 OF 57

E0.1

GENERAL NOTES AND CONDITIONS:

1. THE DRAWINGS SHOW LOCATION OF WALL AND FLOOR MOUNTED OUTLETS AND WIRING DEVICES. THE CONTRACTOR SHALL INSTALL ALL WALL AND FLOOR OUTLETS AND DEVICES AS INDICATED AT LOCATIONS INDICATED ON THESE DRAWINGS.
2. THIS CONTRACT INCLUDES FURNISHING AND INSTALLING ALL FLOOR AND WALL MOUNTED OUTLET BOXES FOR VOICE AND DATA COMMUNICATION WIRING.
3. NOT USED.
4. POWER BRANCH CIRCUIT WIRING TO 120 VOLT RECEPTACLES SHALL CONSIST OF 2#12 AWG AND 1#12 AWG GREEN INSULATED GROUND CONDUCTORS IN CONDUIT 1/2" MINIMUM SIZE. EXCEPT FOR LONG DISTANCES, IN WHICH CASE WIRE SIZE SHALL BE ADJUSTED TO MINIMIZE VOLTAGE DROP.
5. UNLESS INDICATED OTHERWISE BY ELEVATION MARK, ALL RECEPTACLES SHALL BE MOUNTED 18 INCHES A.F.F.
6. NOT USED.
7. NOT USED.
8. NOT USED.
9. NOT USED.
10. THE CONTRACTOR SHALL COORDINATE THE EXACT LOCATION AND ROUGHING IN DIMENSIONS OF ALL EQUIPMENT AND SHALL MAKE ALL FINAL CONNECTIONS AS REQUIRED, I.E., POWER, CONTROL, INTERLOCK, ETC.
11. ALTHOUGH ALL BRANCH CIRCUIT WIRE AND CONDUIT IS NOT SHOWN, IT IS THE INTENT OF THESE DOCUMENTS THAT A COMPLETE BRANCH CIRCUIT WIRING SYSTEM BE INSTALLED. THERE SHALL BE NO COMMON NEUTRALS.
12. THE ELECTRICAL CONTRACTOR SHALL FURNISH AND INSTALL ALL INCIDENTAL ACCESSORIES NECESSARY TO MAKE THE ELECTRICAL WORK COMPLETE AND READY FOR OPERATION.
13. DRAWINGS ARE DIAGRAMMATIC ONLY: EXACT LOCATION, MOUNTING HEIGHTS OF EQUIPMENT AND ROUTING OF RACEWAYS SHALL BE COORDINATED WITH THE EQUIPMENT REQUIREMENTS AND FIELD CONDITIONS.
14. THE CONTRACTOR SHALL PROVIDE AND INSTALL ALL NECESSARY SUPPORTS AND HARDWARE FOR MOUNTING OF ELECTRICAL EQUIPMENT INCLUDED IN THIS PROJECT. MOUNTING HEIGHTS AND RESTRICTIONS AS PER N.E.C.
15. PROVIDE PADLOCK LOCKOUT DEVICES ON ALL CIRCUIT BREAKERS PROTECTING MECHANICAL EQUIPMENT.
16. ALL FUSES FOR ALL EQUIPMENT SHALL BE BUSSMANN LOW PEAK TYPE RK-1. EXCLUDES CONTROL TRANSFORMER FUSES.
17. NOT USED.
18. CONTRACTOR SHALL PROVIDE SUBMITTALS FOR PRODUCTS/DEVICES (CATALOG CUTS) AND SHOP DRAWINGS. THE ITEMS FOR WHICH SAME IS REQUIRED INCLUDES BUT IS NOT LIMITED TO: DISCONNECTS, STARTERS, WIRING DEVICES, COVER PLATES, INTERIOR & EXTERIOR LIGHTS, EMERGENCY LIGHTS, EXIT SIGNS, PANELS, CIRCUIT BREAKERS, MAIN DISCONNECT, LOW VOLTAGE & MEDIUM VOLTAGE CABLE AND WIRE, AND M.V. CABLE TERMINATIONS, LIGHTNING ARRESTERS, PAD MOUNTED TRANSFORMER AS WELL AS OTHER ITEMS LISTED IN SPECIFICATION SECTION 26 05 00.
19. ALL CIRCUITS AND FEEDERS FROM ELECTRICAL PANELS SHALL BE RUN IN CONDUIT. MC CABLE IS PERMITTED ON A LIMITED BASIS AS SEEN IN GENERAL WIRING METHODS SECTION D.
20. NOT USED.
21. ALL CONDUIT PENETRATIONS INTO ELECTRICAL PANELS, MOTOR CONTROL CENTERS, DISCONNECT SWITCHES, STARTERS, CONTROL PANELS, TRANSFORMERS, VFD'S, ETC. SHALL BE MADE BY THE ELECTRICAL CONTRACTOR.
22. ALL CONDUIT PENETRATIONS THRU THE ROOF, AND WALLS TO THE OUTSIDE SHALL BE SEALED WATERTIGHT.
23. POWER CIRCUITS FROM PANELS TO DISCONNECTS AND DISCONNECTS TO VARIABLE FREQUENCY DRIVE UNITS IN LOADS SHALL BE CONTAINED WITHIN CONDUIT. THESE CIRCUITS SHALL BE INSTALLED INDIVIDUALLY WITHIN CONDUIT RACEWAY SYSTEM. TWO OR MORE VFD POWER CIRCUITS SHALL NOT OCCUPY THE SAME CONDUIT OR PULL BOX. ELECTRICAL INTERLOCK CIRCUITS SHALL BE RUN BETWEEN VFD AND INTERLOCKED DISCONNECT IN A DEDICATED CONDUIT SYSTEM.
24. REFER TO MECHANICAL DRAWINGS FOR EXACT HVAC EQUIPMENT LOCATIONS.
25. NOT USED.
26. REGARDLESS OF VOLTAGE, ALL JUNCTION BOXES, AND PULL BOXES FOR BRANCH CIRCUITS, SUB FEEDERS, AND FEEDERS SHALL IDENTIFY THE CIRCUITS WITHIN BY CIRCUIT NUMBER AND PANEL OF ORIGIN. IDENTIFICATION SHALL BE ACCOMPLISHED WITH A BLACK PERMANENT FELT TIP MARKER.
27. ALL INDIVIDUAL PHASE, AND NEUTRAL BRANCH CIRCUIT CONDUCTORS SHALL BE IDENTIFIED WITHIN ALL PULL BOXES, JUNCTION BOXES, AND AT THE POINT OF USE WITH THE BRANCH CIRCUIT POLE POSITION CONNECTED TO AT THE POWER OR LIGHTING PANEL.
28. NOT USED.
29. NOT USED.
30. THE CONTRACTOR IS RESPONSIBLE FOR NOTIFYING AND COORDINATING ALL POWER OUTAGES AND LIMITED UTILITY INTERRUPTIONS WITH THE BASE CIVIL ENGINEER CONSTRUCTION ELEMENT AT LEAST 5 DAYS IN ADVANCE OF THE INTENDED OUTAGE
31. MANDATORY VERIFICATION BY THE BASE CIVIL ENGINEER CONSTRUCTION ELEMENT OF THE ELECTRICAL ROUGH-IN WORK IS REQUIRED BEFORE ANY FOLLOW-ON WORK IS ALLOWED TO START. THE CONTRACTOR SHALL NOTIFY THE BASE CIVIL ENGINEER CONSTRUCTION ELEMENT AT LEAST 24 HOURS PRIOR TO THE DESIRED VERIFICATION DATE.
32. ALL MATERIAL SHALL BE NEW UNLESS IDENTIFIED AS EXISTING.
33. PROVIDE HACR TYPE CIRCUIT BREAKERS FOR ALL REFRIGERATION, AIR CONDITIONER, AND HEAT PUMP CIRCUITS.
34. ALL DISTRIBUTION PANELBOARDS, ENCLOSED CIRCUIT BREAKERS, LIGHTING AND POWER PANELBOARDS, SAFETY SWITCHES, COMBINATION STARTERS, STARTERS, AND TRANSFORMERS SHALL BE SQUARE-D OR SWITCHGEAR STANDARD. ALL PHYSICAL SIZES, CAPACITIES AND LUG TERMINATION'S ARE BASED ON SQUARE-D EQUIPMENT. THE CONTRACTOR IS RESPONSIBLE TO INSURE THAT EQUIPMENT FROM THE OTHER THREE EQUALS LISTED WILL PHYSICALLY FIT INTO THE SPACE ALLOTTED AND THAT ALL CAPACITIES ARE MET OR EXCEEDED AND THAT ALL LUGS ARE SUITABLE FOR FEEDERS AND BRANCH CIRCUITS BEING INSTALLED.
35. NOT USED.

GENERAL WIRING METHODS:

A. ELECTRICAL METALLIC TUBING (E.M.T.)

1. MAY BE USED ANYWHERE IN DRY LOCATIONS FOR FEEDERS OR BRANCH CIRCUITS, WHERE PERMITTED BY THE NEC.
2. SHALL NOT BE INSTALLED IN WET OR DAMP LOCATIONS. ALL FEEDERS AND BRANCH CIRCUITS ON THE EXTERIOR OF THE BUILDING SHALL BE INSTALLED WITHIN GALVANIZED RIGID STEEL CONDUIT.
3. IF NOT INTEGRAL, PROVIDE INSULATED BUSHINGS ON ALL BOX CONNECTORS.
4. SET SCREW COUPLINGS AND BOX CONNECTORS MAY BE USED.
5. AN INTERNAL EQUIPMENT GROUND SHALL BE USED WITH ALL EMT.
6. ALL CONDUIT SHALL BE INSTALLED AND SUPPORTED IN ACCORDANCE WITH THE NEC.

B. GALVANIZED RIGID STEEL CONDUIT

1. MAY BE USED ANYWHERE AS PERMITTED OR REQUIRED BY THE NEC, AND SHALL BE INSTALLED WHERE SPECIFICALLY INDICATED ON PLANS.
2. WHERE USED FOR UNDERGROUND WORK, IT SHALL BE OF THE TYPE LISTED FOR UNDERGROUND INSTALLATIONS.
3. ALL CONDUITS THAT TERMINATE WITHIN ANY EQUIPMENT ENCLOSURE SHALL HAVE INSULATED BUSHINGS INSTALLED.
4. WHERE INDICATED ON PLANS AND AS REQUIRED BY THE NEC, PROVIDE INSULATED GROUNDING TYPE BUSHINGS FOR BONDING ENCLOSURE CABINETS TO THE CONDUIT SYSTEM.
5. AN INTERNAL EQUIPMENT GROUND SHALL BE RUN WITHIN ALL GALVANIZED RIGID STEEL CONDUIT.
6. ALL CONDUIT SHALL BE INSTALLED AND SUPPORTED IN ACCORDANCE WITH THE NEC.

C. RIGID ALUMINUM CONDUIT

1. MAY BE USED OUTSIDE OF THE BUILDING WHERE PERMITTED BY CODE. IT SHALL NOT BE USED FOR ANY UNDERGROUND WORK.
2. AN INTERNAL EQUIPMENT GROUNDING CONDUCTOR SHALL BE USED WITH ALL RIGID ALUMINUM CONDUIT.
3. ALL CONDUIT SHALL BE INSTALLED AND SUPPORTED IN ACCORDANCE WITH THE NEC.

D. TYPE M.C. METAL CLAD CABLE

1. TYPE M.C. CABLE MAY BE USED ON A LIMITED BASIS AS FOLLOWS:
   - A. TYPE M.C. CABLE SHALL NOT BE INSTALLED ANYWHERE IT WILL BE EXPOSED. IT SHALL NOT BE USED IN MECHANICAL OR ELECTRICAL ROOMS. IT SHALL NOT BE INSTALLED IN WET OR DAMP AREAS.
   - B. M.C. CABLE MAY BE USED FOR POWER WHIPS FROM ABOVE CEILING JUNCTION BOXES TO LIGHT FIXTURES NOT EXCEEDING 6 FEET OF CABLE WHERE CABLE IS ACCESSIBLE ABOVE DROPPED CEILINGS.
   - C. M.C. CABLE SHALL, AT NO POINT, COME IN CONTACT WITH A DROPPED CEILING.
   - D. BOX CONNECTORS USED ON M.C. CABLE SHALL BE OF THE TYPE LISTED FOR M.C. CABLE.

E. FLEXIBLE METAL CONDUIT

1. MAY BE USED TO PROVIDE A FLEXIBLE CONNECTION TO A MOVING OR VIBRATING LOAD AND SHALL BE LIMITED TO 18 INCHES IN LENGTH. MAY BE USED IN LENGTHS OF UP TO 48 INCHES FOR INTERIOR CONNECTIONS TO HVAC EQUIPMENT AND TRANSFORMERS.
2. MAY ONLY BE USED IN DRY LOCATIONS. IT SHALL NOT BE INSTALLED EXTERIOR TO THE BUILDING.
3. AN INTERNAL EQUIPMENT GROUNDING CONDUCTOR SHALL BE INSTALLED WITHIN ALL FLEXIBLE METAL CONDUIT.

F. WATER TIGHT FLEXIBLE METAL CONDUIT

1. SHALL BE USED FOR ALL FLEXIBLE CONNECTIONS REQUIRED ON THE EXTERIOR OF THE BUILDING.
2. SHALL BE USED FOR CONNECTIONS TO ALL MOTORS, REGARDLESS OF WHETHER THE MOTOR IS LOCATED INSIDE OR OUTSIDE OF THE BUILDING. LENGTH OF FLEXIBLE CONNECTION SHALL NOT EXCEED 18 INCHES FOR CONNECTION TO MOTORS AND 48 INCHES FOR CONNECTION TO HVAC EQUIPMENT.
3. ALL CONNECTORS USED SHALL BE WATER TIGHT AND OF THE TYPE LISTED FOR USE WITH WATERTIGHT FLEXIBLE METAL CONDUIT. AN INTERNAL EQUIPMENT GROUNDING CONDUCTOR SHALL BE INSTALLED WITHIN ALL WATER TIGHT FLEXIBLE METAL CONDUIT. THE ARMORED JACKET OF THE CABLE SHALL NOT BE PERMITTED TO BE THE SOLE EQUIPMENT GROUND.

DEMOLITION NOTES:

1. ALL MATERIALS AND EQUIPMENT REMOVED AND NOT INDICATED OR SPECIFIED TO BE REUSED SHALL BE REMOVED FROM THE PROPERTY PROMPTLY.
2. THE CONTRACTOR MAY ELECT TO REUSE THE EXISTING INSTALLED ELECTRICAL RACEWAYS IN THE BUILDING, PROVIDED THESE ACCOMMODATE THE NUMBER OF NEW CIRCUIT CONDUCTORS TO BE PROVIDED. THE EXISTING RACEWAYS TO BE REUSED SHALL BE IN THE PROPER LOCATION TO SUIT THE NEW GENERAL CONSTRUCTION.
3. IN REMOVING EXISTING OUTLETS AND EQUIPMENT REMOVE THESE ITEMS COMPLETE, INCLUDING WIRING DEVICES, LIGHTING FIXTURES, OUTLET BOXES, ELECTRICAL RACEWAYS, POWER AND CONTROL WIRING, ETC.
4. WHERE EXISTING RACEWAYS AND BOXES CANNOT BE REMOVED DUE TO ARCHITECTURAL OR STRUCTURAL CONDITIONS, THE GOVERNMENT SHALL BE INFORMED FOR INSTRUCTIONS.
5. REFER TO THE ELECTRICAL DRAWINGS AND ON-SITE SURVEY FOR SCOPE OF THE WORK INVOLVED.
6. ANY ELECTRICAL EQUIPMENT REQUIRING REMOVAL AND/OR RELOCATION TO MEET THE DESIGN CONCEPT, BUT NOT INDICATED IN THE CONTRACT DRAWING, SHALL BE REMOVED AND/OR RELOCATED BY THE CONTRACTOR AT NO ADDITIONAL COST TO THE GOVERNMENT.
7. THE EXISTING CEILING OR WALLS IN THE BUILDING, WHERE DAMAGED OR OPENINGS MADE IN CONJUNCTION WITH THE ELECTRICAL DEMOLITION AND REMOVAL, SHALL BE REPAIRED AND/OR PATCHED USING MATERIAL AND METHODS TO MATCH THE FIRE RATING OF THE EXISTING CEILINGS OR WALLS IN THE BUILDING.
8. THE CONTRACTOR SHALL BE RESPONSIBLE FOR ALL SITE SAFETY.
9. THE CONTRACTOR SHALL KEEP THE WORK AREA NEAT AND ORDERLY.
10. ALL DEMOLISHED MATERIALS NOT BEING REUSED SHALL BE REMOVED FROM THE SITE DAILY.
11. PROVIDE ALL TEMPORARY SUPPORTS, BRACING, ETC. AS MAY BE REQUIRED DURING DEMOLITION.
12. BEFORE LEAVING THE SITE EACH DAY, VERIFY THAT NO HAZARDOUS CONDITIONS EXIST RESULTING FROM PARTIAL DEMOLITION. SHOULD AN UNSAFE CONDITION EXIST EITHER SECURE THE WORK IN A SAFE MANNER OR COMPLETE THE DEMOLITION WORK TO A POINT WHERE THE HAZARD HAS BEEN ELIMINATED. THIS SHALL BE ACCOMPLISHED AS PART OF THE CONTRACT.
13. PROVIDE TEMPORARY BARRIERS AND/OR ENCLOSURES AS REQUIRED TO PROTECT ADJACENT AREAS FROM DAMAGE AND CONSTRUCTION DUST.
14. CONTRACTORS SHALL CHECK WITH THE PROJECT'S CONSTRUCTION MANAGER FOR THE PRESENCE OF ASBESTOS CONTAINING MATERIAL OR OTHER SUSPICIOUS MATERIALS PRIOR TO REMOVAL OF ANY MATERIAL. ANY ABATEMENT WILL BE PERFORMED BY OTHERS AND IS NOT PART OF THIS CONTRACT.
15. DEMOLITION AND REMOVAL OF ELECTRICAL EQUIPMENT CONCEALED IN MASONRY WALLS
    - A. UNDER DEMOLITION AND REMOVAL OF EXISTING ELECTRICAL RACEWAYS AND OUTLET BOXES INSTALLED, CONCEALED IN MASONRY WALLS THAT ARE NOT DESIGNATED TO BE REUSED IN THE NEW ARRANGEMENT, REMOVE THE EXISTING CIRCUIT WIRING IN THE RACEWAY AND ABANDON RACEWAY IN PLACE. REMOVE ANY EXISTING FLUSH OR SURFACE MOUNTED OUTLET BOXES COMPLETE.
    - B. CONTRACTOR SHALL BE RESPONSIBLE FOR THE CUTTING AND PATCHING OF THE MASONRY WALLS, ETC. REQUIRED FOR THIS REMOVAL.
16. DEMOLITION AND REMOVAL OF ELECTRICAL EQUIPMENT CONCEALED IN PLASTER OF DRY-WALL PARTITIONS
    - A. UNDER DEMOLITION AND REMOVAL OF EXISTING ELECTRICAL RACEWAYS AND OUTLET BOXES NOT DESIGNATED TO BE REUSED IN THE NEW ARRANGEMENT AND INSTALLED CONCEALED IN WALLS AND PARTITIONS WITH PLASTER OR DRY-WALL FINISH MATERIALS, REMOVE THESE RACEWAYS AND BOXES COMPLETE.
    - B. PROVIDE THE CUTTING AND PATCHING OF THESE WALLS, PARTITIONS, ETC. REQUIRED FOR THIS REMOVAL.
    - C. WHERE EXISTING WALL AND/OR PARTITIONS ARE TO BE REMOVED, REMOVE ALL EXISTING ELECTRICALRACEWAYS,OUTLET BOXES, CIRCUIT WIRES, WIRING DEVICES, ETC. COMPLETE. EXISTING ELECTRICAL RACEWAYS THAT EXTEND INTO ACCESSIBLE CEILING SPACES SHALL BE REMOVED COMPLETE ABOVE THE ACCESSIBLE CEILING AREAS.

REV	DATE	DESCRIPTION	DRAWN	APPRD
B	01JUL10	ISSUED FOR BID	SJL	CDS
A	11MAY10	ISSUED FOR REVIEW	SJL	CDS

AIR MOBILITY COMMAND
DOVER AIR FORCE BASE, DELAWARE

TITLE: REPAIR RESERVE HEADQUARTERS FACILITY 202

SUBMITTED	APPROVED	APPROVED
CHIEF ENGINEER	CHIEF ENGINEER	COMMANDER

DATE:	PROJECT #:	PLOT SCALE:	DRAWN BY:	DESIGNED BY:
4-30-10	049002	AS NOTED	MJP	MJM

ELECTRICAL NOTES

W-4497

SHT 43 OF 57

E0.2

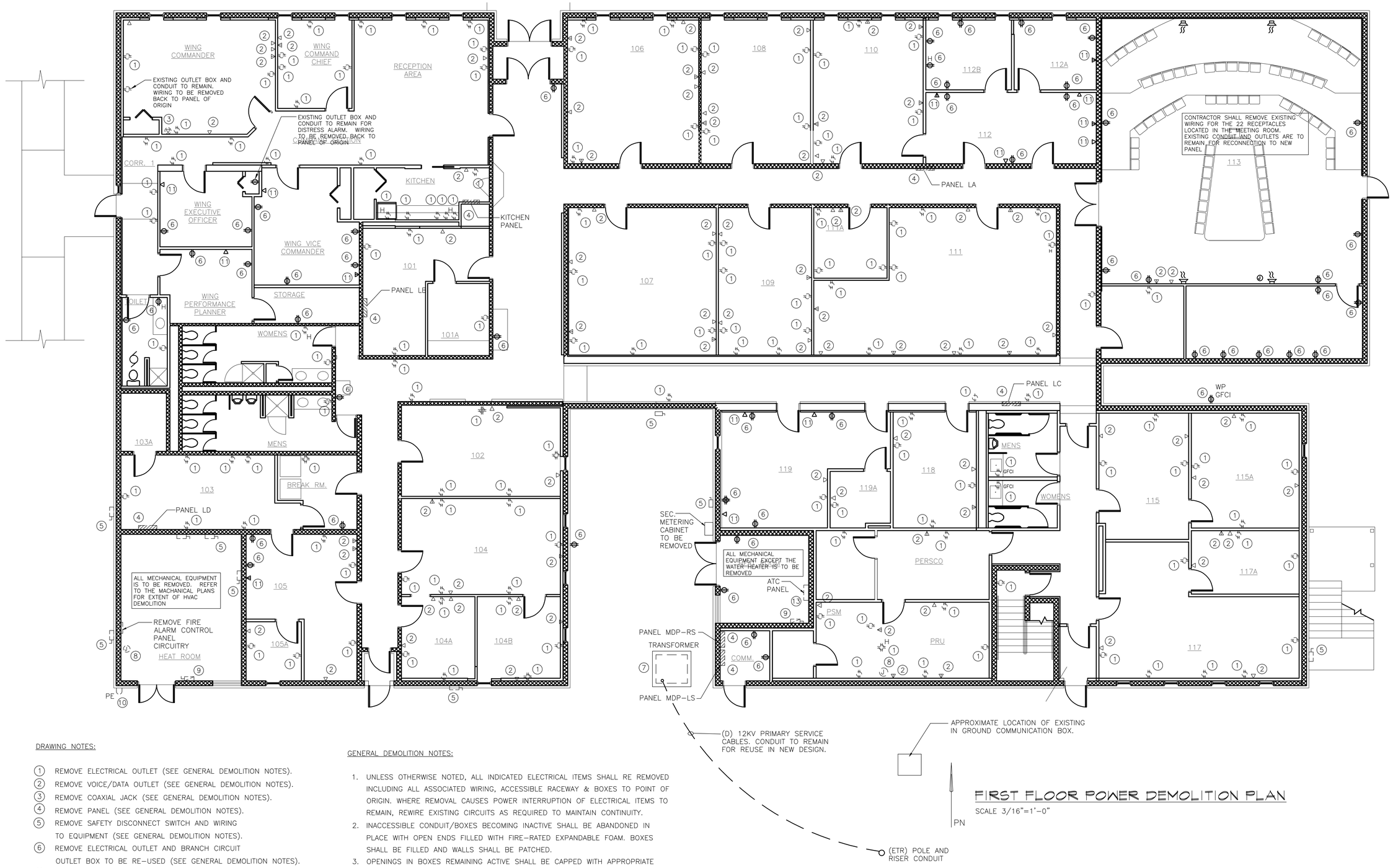

FIRST FLOOR POWER DEMOLITION PLAN

SCALE 3/16"=1'-0"

DRAWING NOTES:

1. REMOVE ELECTRICAL OUTLET (SEE GENERAL DEMOLITION NOTES).
2. REMOVE VOICE/DATA OUTLET (SEE GENERAL DEMOLITION NOTES).
3. REMOVE COAXIAL JACK (SEE GENERAL DEMOLITION NOTES).
4. REMOVE PANEL (SEE GENERAL DEMOLITION NOTES).
5. REMOVE SAFETY DISCONNECT SWITCH AND WIRING TO EQUIPMENT (SEE GENERAL DEMOLITION NOTES).
6. REMOVE ELECTRICAL OUTLET AND BRANCH CIRCUIT OUTLET BOX TO BE RE-USED (SEE GENERAL DEMOLITION NOTES).
7. REMOVE TRANSFORMER SECONDARY SERVICE AND PRIMARY SERVICE CONDUCTORS. PRIMARY CONDUIT TO REMAIN FOR REUSE IN NEW DESIGN. (SEE GENERAL DEMOLITION NOTES).
8. REMOVE JUNCTION BOX (SEE GENERAL DEMOLITION NOTES).
9. REMOVE EXISTING MOTOR STARTER AND WIRING TO EQUIPMENT.
10. REMOVE AND REPLACE EXISTING PHOTO-EYE OUTLET BOX AND WIRING TO REMAIN.
11. REMOVE VOICE/DATA OUTLET AND WIRING. OUTLET BOX TO BE RE-USED (SEE GENERAL DEMOLITION NOTES).
12. REMOVE EXISTING BRANCH CIRCUIT.
13. ATC PANEL TO BE REMOVED. REMOVE ALL CONTROL & POWER WIRING.

GENERAL DEMOLITION NOTES:

1. UNLESS OTHERWISE NOTED, ALL INDICATED ELECTRICAL ITEMS SHALL RE REMOVED INCLUDING ALL ASSOCIATED WIRING, ACCESSIBLE RACEWAY & BOXES TO POINT OF ORIGIN. WHERE REMOVAL CAUSES POWER INTERRUPTION OF ELECTRICAL ITEMS TO REMAIN, REWIRE EXISTING CIRCUITS AS REQUIRED TO MAINTAIN CONTINUITY.
2. INACCESSIBLE CONDUIT/BOXES BECOMING INACTIVE SHALL BE ABANDONED IN PLACE WITH OPEN ENDS FILLED WITH FIRE-RATED EXPANDABLE FOAM. BOXES SHALL BE FILLED AND WALLS SHALL BE PATCHED.
3. OPENINGS IN BOXES REMAINING ACTIVE SHALL BE CAPPED WITH APPROPRIATE FITTINGS.
4. ALL OPENINGS & CUTTINGS IN WALLS, FLOORS, & CEILINGS ASSOCIATED WITH ELECTRICAL DEMOLITION SHALL BE PATCHED & PAINTED BY GENERAL CONTRACTOR TO MATCH SURROUNDING FINISHES.
5. ALL FIRE ALARM EQUIPMENT MUST BE REMOVED AND REPLACED. ONLY THE SECURITY SYSTEM WILL BE REUSED.
6. REMOVAL OF PANEL BOARD SHALL INCLUDE THE BACKBOX, INTERIOR, CIRCUIT BREAKERS AND ALL BRANCH CIRCUITS.
7. REFER TO MECHANICAL PLANS FOR EXTENT OF MECHANICAL EQUIPMENT DEMOLITION, RELOCATION AND REUSE.

REV	DATE	DESCRIPTION	DRAWN	APPRD
B	01JUL10	ISSUED FOR BID	SJL	CDS
A	11MAY10	ISSUED FOR REVIEW	SJL	CDS

AIR MOBILITY COMMAND
DOVER AIR FORCE BASE, DELAWARE

TITLE: REPAIR RESERVE HEADQUARTERS FACILITY 202

SUBMITTED	APPROVED	APPROVED
CHIEF ENGINEER	CHIEF ENGINEER	COMMANDER

DATE:	PROJECT #:	PLOT SCALE:	DRAWN BY:	DESIGNED BY:
4-30-10	049002	AS NOTED	MJP	MJM

ELECTRICAL DEMOLITION FLOOR PLANS

W-4497

SHT 44 OF 57

ED1

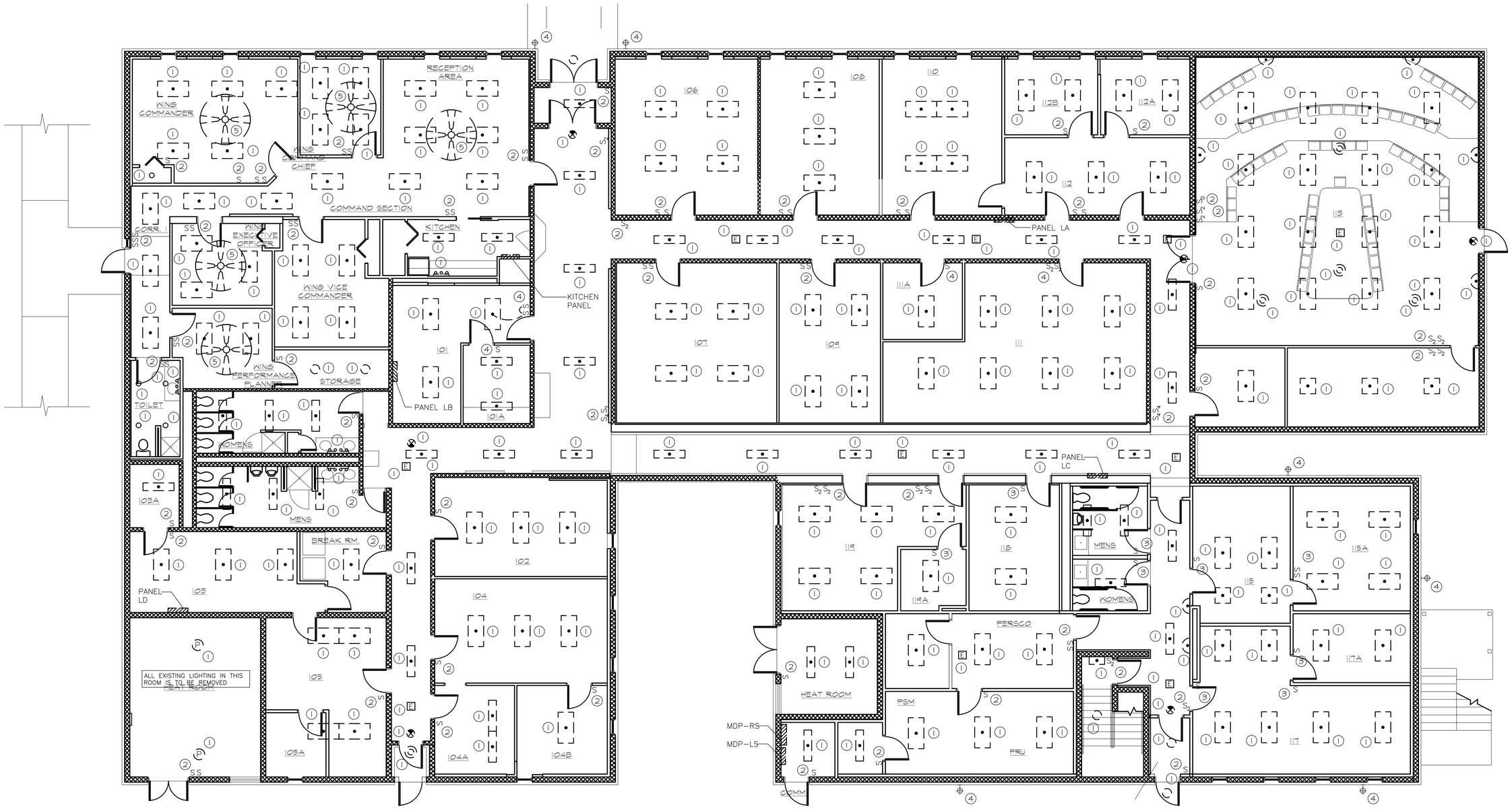

PN

FIRST FLOOR LIGHTING DEMOLITION PLAN

SCALE 3/16"=1'-0"

DRAWING NOTES:

1. REMOVE LIGHTING FIXTURE (SEE GENERAL DEMOLITION NOTES).
2. REMOVE WALL SWITCH, OUTLET BOX TO REMAIN (SEE GENERAL DEMOLITION NOTES).
3. REMOVE WALL SWITCH, INCLUDING OUTLET BOX (SEE GENERAL DEMOLITION NOTES).
4. REMOVE EXISTING DEVICE & BRANCH CIRCUIT OUTLET BOX TO BE RE-USED (SEE GENERAL DEMOLITION NOTES).
5. REMOVE CEILING FAN, OUTLET BOX TO REMAIN (SEE GENERAL DEMOLITION NOTES).

GENERAL DEMOLITION NOTES:

1. UNLESS OTHERWISE NOTED, ALL INDICATED ELECTRICAL ITEMS SHALL RE REMOVED INCLUDING ALL ASSOCIATED WIRING, ACCESSIBLE RACEWAY & BOXES TO POINT OF ORIGIN. WHERE REMOVAL CAUSES POWER INTERRUPTION OF ELECTRICAL ITEMS TO REMAIN, REWIRE EXISTING CIRCUITS AS REQUIRED TO MAINTAIN CONTINUITY.
2. INACCESSIBLE CONDUIT/BOXES BECOMING INACTIVE SHALL BE ABANDONED IN PLACE WITH OPEN ENDS FILLED WITH FIRE-RATED EXPANDABLE FOAM.
3. OPENINGS IN BOXES REMAINING ACTIVE SHALL BE CAPPED WITH APPROPRIATE FITTINGS.
4. ALL OPENINGS & CUTTINGS IN WALLS, FLOORS, & CEILINGS ASSOCIATED WITH ELECTRICAL DEMOLITION SHALL BE PATCHED & PAINTED BY GENERAL CONTRACTOR TO MATCH SURROUNDING FINISHES.
5. ALL LIGHTING FIXTURES ARE TO BE REMOVED. CONTRACTOR SHALL COORDINATE WITH THE BASE REPRESENTATIVE FOR PROPER DISPOSAL OR STORAGE PROCEDURES.
6. ALL LIGHTING CIRCUITS ARE TO BE REMOVED INCLUDING WIRE, CONDUIT, BOXES AND SWITCHES BACK TO PANEL OF ORIGIN.

REV	DATE	DESCRIPTION	DRAWN	APPRD
B	01JUL10	ISSUED FOR BID	SJL	CDS
A	11MAY10	ISSUED FOR REVIEW	SJL	CDS

AIR MOBILITY COMMAND
DOVER AIR FORCE BASE, DELAWARE

TITLE: REPAIR RESERVE HEADQUARTERS FACILITY 202

SUBMITTED	APPROVED	APPROVED
CHIEF ENGINEER	CHIEF ENGINEER	COMMANDER

DATE:	PROJECT #:	PLOT SCALE:	DRAWN BY:	DESIGNED BY:
4-30-10	049002	AS NOTED	MJP	MJM

ELECTRICAL DEMOLITION FLOOR PLANS

W-4497

SHT 45 OF 57

ED2

DRAWING NOTES:

1. REMOVE ELECTRICAL OUTLET (SEE GENERAL DEMOLITION NOTES).
2. REMOVE VOICE OUTLET (SEE GENERAL DEMOLITION NOTES).
3. REMOVE COAXIAL JACK (SEE GENERAL DEMOLITION NOTES).
4. REMOVE SURFACE MOUNTED UTILITY STRIP (SEE GENERAL DEMOLITION NOTES).

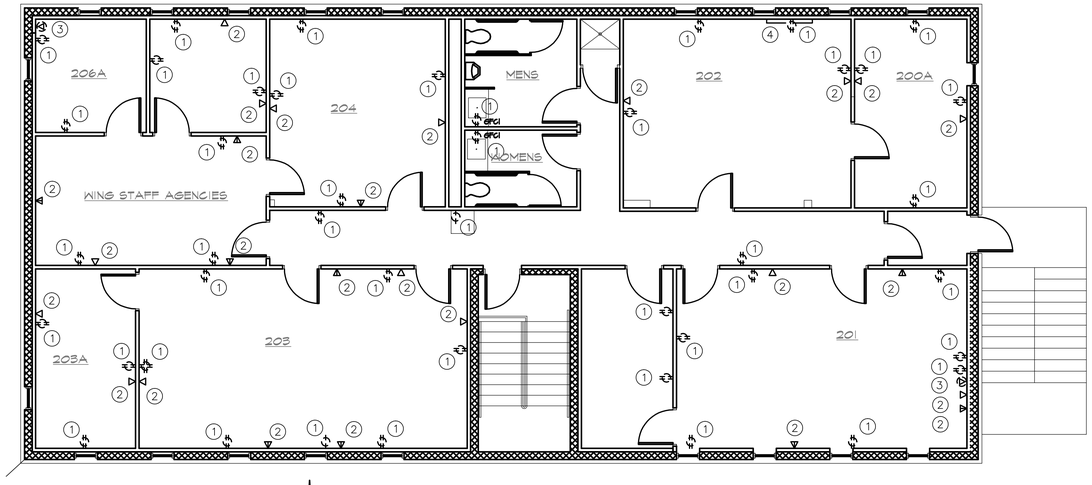

PN

SECOND FLOOR POWER DEMOLITION PLAN

SCALE 3/16"=1'-0"

DRAWING NOTES:

1. REMOVE LIGHTING FIXTURE (SEE GENERAL DEMOLITION NOTES).
2. REMOVE WALL SWITCH, OUTLET BOX TO REMAIN (SEE GENERAL DEMOLITION NOTES).
3. REMOVE WALL SWITCH, INCLUDING OUTLET BOX (SEE GENERAL DEMOLITION NOTES).

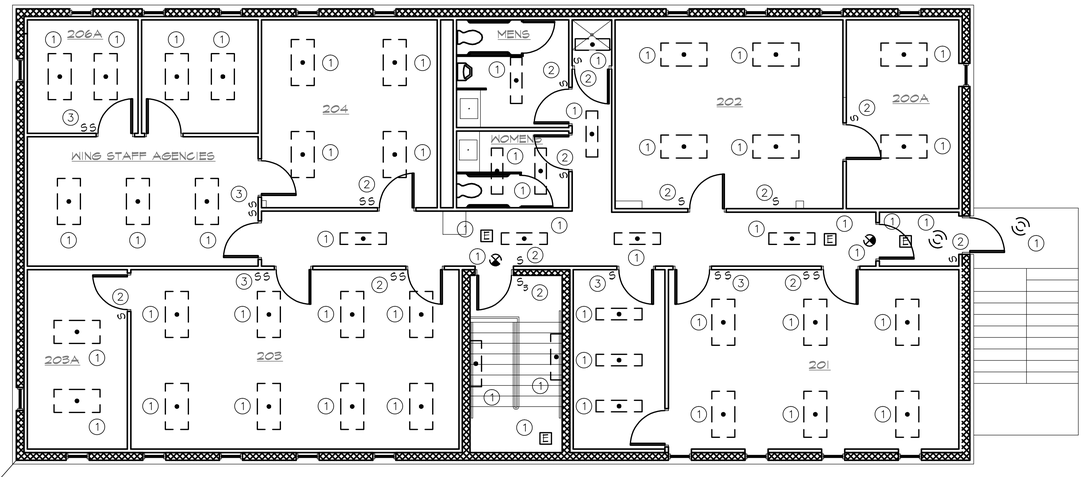

PN

SECOND FLOOR LIGHTING DEMOLITION PLAN

SCALE 3/16"=1'-0"

GENERAL DEMOLITION NOTES:

1. UNLESS OTHERWISE NOTED, ALL INDICATED ELECTRICAL ITEMS SHALL RE REMOVED INCLUDING ALL ASSOCIATED WIRING, ACCESSIBLE RACEWAY & BOXES TO POINT OF ORIGIN. WHERE REMOVAL CAUSES POWER INTERRUPTION OF ELECTRICAL ITEMS TO REMAIN, REWIRE EXISTING CIRCUITS AS REQUIRED TO MAINTAIN CONTINUITY.
2. INACCESSIBLE CONDUIT/BOXES BECOMING INACTIVE SHALL BE ABANDONED IN PLACE WITH OPEN ENDS FILLED WITH FIRE-RATED EXPANDABLE FOAM.
3. OPENINGS IN BOXES REMAINING ACTIVE SHALL BE CAPPED WITH APPROPRIATE FITTINGS.
4. ALL OPENINGS & CUTTINGS IN WALLS, FLOORS, & CEILINGS ASSOCIATED WITH ELECTRICAL DEMOLITION SHALL BE PATCHED & PAINTED BY GENERAL CONTRACTOR TO MATCH SURROUNDING FINISHES.
5. ALL FIRE ALARM EQUIPMENT MUST BE REMOVED AND REPLACED. ONLY THE SECURITY SYSTEM WILL BE REUSED.
6. ALL LIGHTING FIXTURES ARE TO BE REMOVED. CONTRACTOR SHALL COORDINATE WITH THE BASE REPRESENTATIVE FOR PROPER DISPOSAL OR STORAGE PROCEDURES.
7. ALL LIGHTING CIRCUITS ARE TO BE REMOVED INCLUDING WIRE, CONDUIT, BOXES AND SWITCHES BACK TO PANEL OF ORIGIN.

REV	DATE	DESCRIPTION	DRAWN	APPRD
B	01JUL10	ISSUED FOR BID	SJL	CDS
A	11MAY10	ISSUED FOR REVIEW	SJL	CDS

AIR MOBILITY COMMAND
DOVER AIR FORCE BASE, DELAWARE

TITLE: REPAIR RESERVE HEADQUARTERS FACILITY 202

SUBMITTED		APPROVED		APPROVED
CHIEF ENGINEER		CHIEF ENGINEER		COMMANDER
DATE: 4-30-10	PROJECT #: 049002	PLOT SCALE: AS NOTED	DRAWN BY: MJP	DESIGNED BY: MJM

ELECTRICAL DEMOLITION FLOOR PLANS

W-4497

SHT 46 OF 57

ED3

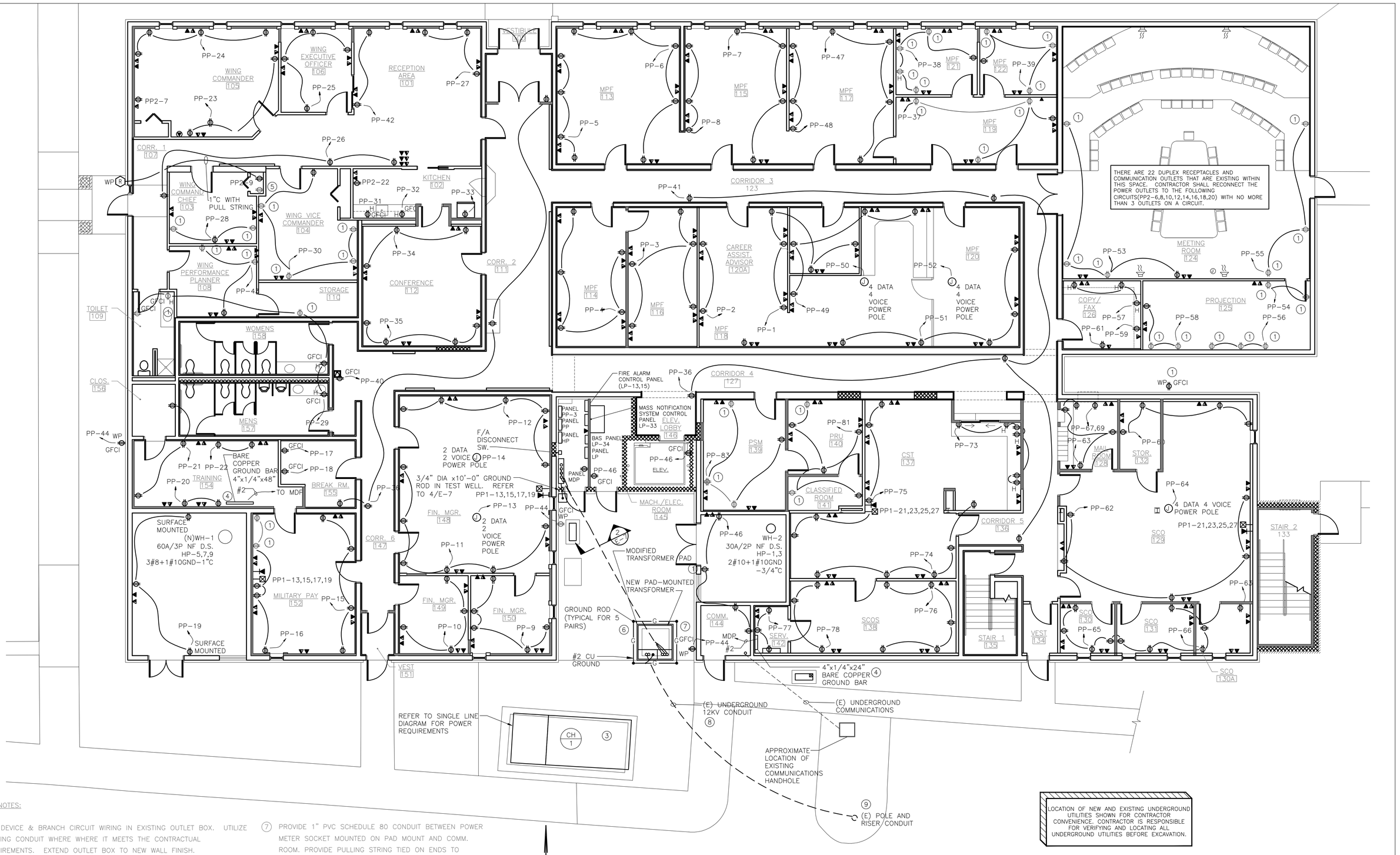

POWER PLAN, 1ST FLOOR

SCALE 3/16"=1'-0"

LOCATION OF NEW AND EXISTING UNDERGROUND UTILITIES SHOWN FOR CONTRACTOR CONVENIENCE. CONTRACTOR IS RESPONSIBLE FOR VERIFYING AND LOCATING ALL UNDERGROUND UTILITIES BEFORE EXCAVATION.

DRAWING NOTES:

1. NEW DEVICE & BRANCH CIRCUIT WIRING IN EXISTING OUTLET BOX. UTILIZE EXISTING CONDUIT WHERE WHERE IT MEETS THE CONTRACTUAL REQUIREMENTS. EXTEND OUTLET BOX TO NEW WALL FINISH.
2. EXACT LOCATION OF ELECTRICAL EQUIPMENT AND DEVICES SHALL BE COORDINATED WITH ELEVATOR VENDOR.
3. COORDINATE WITH OTHERS REGARDING NEW 60T CHILLER LOCATION SUCH THAT NEW CHILLER DOES NOT CONFLICT WITH WORKING SPACE OF NEW PADMOUNTED TRANSFORMER ON MODIFIED PAD.
4. MOUNT GROUND BAR 4' A.F.F. ON STAND-OFF INSULATORS. PROVIDE BARE 3/0 Cu IN 1" SCHED 80 PVC FROM GROUND BAR TO NEUTRAL BUS IN PANEL MDP. (TYP. FOR 2)
5. CONTRACTOR SHALL RECONNECT NEW CIRCUIT (PP2-11) TO EXISTING DISTRESS ALARM PANEL OUTLET.
6. REINFORCE TRANSFORMER PAD AS REQUIRED TO ACCOMMODATE NEW LARGER TRANSFORMER. REFER TO A5.1 FOR PAD REQUIREMENTS. REGROUND TRANSFORMER PAD PER DETAIL 3/E-7. PROVIDE LOAD BREAK ELBOW CABLE TERMINATORS.
7. PROVIDE 1" PVC SCHEDULE 80 CONDUIT BETWEEN POWER METER SOCKET MOUNTED ON PAD MOUNT AND COMM. ROOM. PROVIDE PULLING STRING TIED ON ENDS TO FASTEN IN PLACE.
8. PROVIDE NEW CABLE IN EXISTING CONDUIT SEE E-6 FOR CABLE INFO.
9. PROVIDE 25KV COLD SHRINK TERMINATORS AND TERMINATOR CROSSARM BRACKETS. PROVIDE LINE TAPS FROM 12KV POLE LINE.

NOTES:

1. REFER TO DRAWING E-5 FOR PANEL SCHEDULE.
2. REFER TO DRAWING E-0.1 & E-0.2 FOR NOTES AND SPECIFICATIONS.
3. CONTRACTOR SHALL COORDINATE ALL DEVICE LOCATIONS WITH FURNITURE LAYOUT.

REV	DATE	DESCRIPTION	DRAWN	APPRD
B	01JUL10	ISSUED FOR BID	SJL	CDS
A	11MAY10	ISSUED FOR REVIEW	SJL	CDS

AIR MOBILITY COMMAND
DOVER AIR FORCE BASE, DELAWARE

TITLE: REPAIR RESERVE HEADQUARTERS FACILITY 202

SUBMITTED	APPROVED	APPROVED
CHIEF ENGINEER	CHIEF ENGINEER	COMMANDER

DATE:	PROJECT #:	PLOT SCALE:	DRAWN BY:	DESIGNED BY:
4-30-10	049002	AS NOTED	MJP	MJM

ELECTRICAL POWER PLAN, 1ST FLOOR

W-4497

SHT 47 OF 57

E1

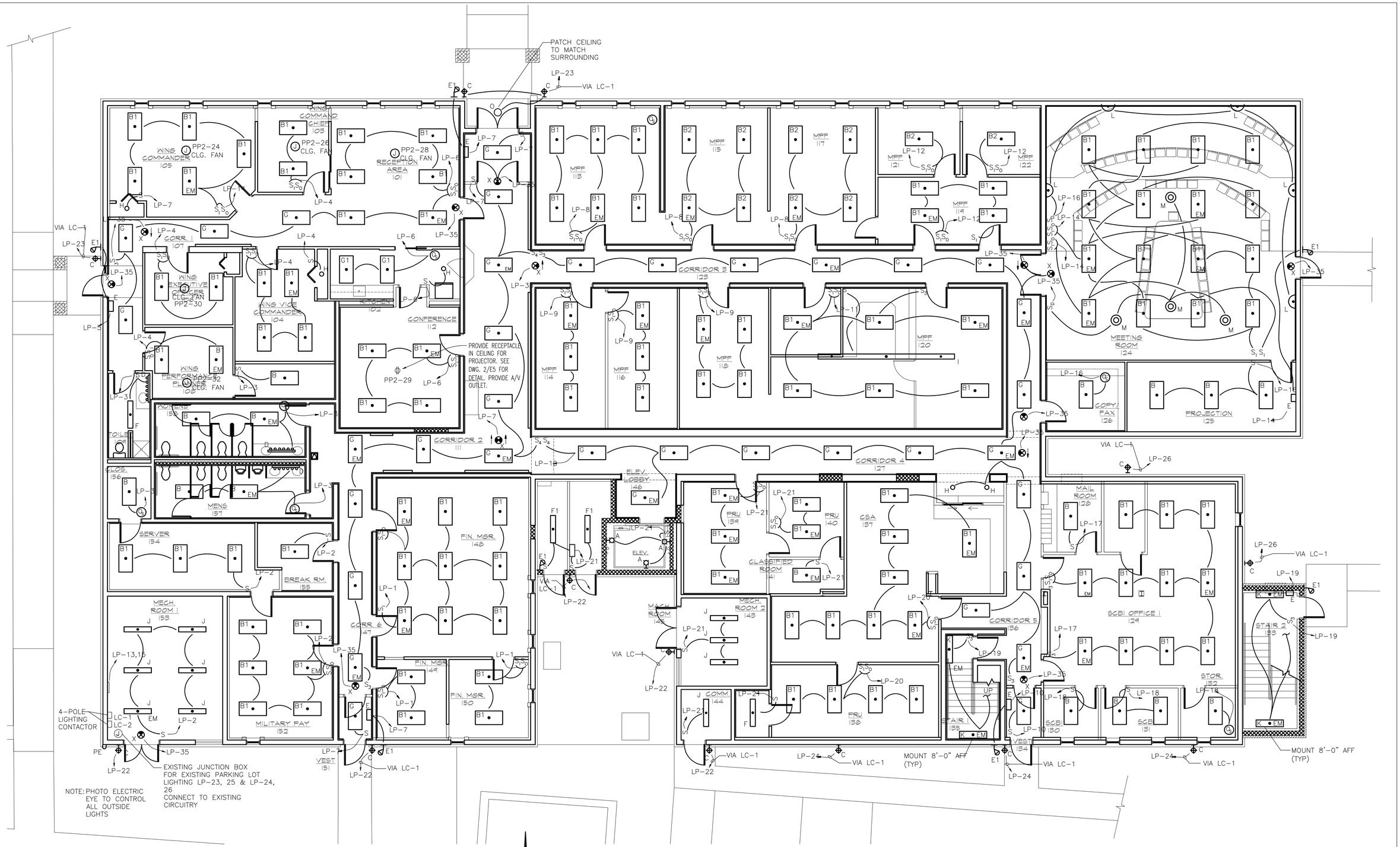

LIGHTING PLAN, 1ST FLOOR

SCALE 3/16"=1'-0"

NOTES:
1. REFER TO DRAWING E-5 FOR LIGHTING FIXTURE SCHEDULE.
2. REFER TO DRAWING E-0.1 & E-0.2 FOR NOTES AND SPECIFICATIONS.

REV	DATE	DESCRIPTION	DRAWN	APPRD
B	01JUL10	ISSUED FOR BID	SJL	CDS
A	11MAY10	ISSUED FOR REVIEW	SJL	CDS

AIR MOBILITY COMMAND
DOVER AIR FORCE BASE, DELAWARE

TITLE: REPAIR RESERVE HEADQUARTERS FACILITY 202

SUBMITTED	APPROVED	APPROVED
CHIEF ENGINEER	CHIEF ENGINEER	COMMANDER

DATE:	PROJECT #:	PLOT SCALE:	DRAWN BY:	DESIGNED BY:
4-30-10	049002	AS NOTED	MJP	MJM

ELECTRICAL LIGHTING PLAN, 1ST FLOOR

W-4497

SHT 48 OF 57

E2

DRAWING NOTES:

1. NEW DEVICE & BRANCH CIRCUIT WIRING IN EXISTING OUTLET BOX. UTILIZE EXISTING CONDUIT WHERE WHERE IT MEETS THE CONTRACTUAL REQUIREMENTS. EXTEND OUTLET BOX TO NEW WALL FINISH.
2. EXACT LOCATION OF ELECTRICAL EQUIPMENT AND DEVICES SHALL BE COORDINATED WITH ELEVATOR VENDOR.

PN

ELECTRICAL HVAC PLAN, 1ST FLOOR

SCALE 3/16"=1'-0"

REV	DATE	DESCRIPTION	DRAWN	APPRD
2	01JUL10	ISSUED FOR BID	SJL	CDS
1	11MAY10	ISSUED FOR REVIEW	SJL	CDS

AIR MOBILITY COMMAND
DOVER AIR FORCE BASE, DELAWARE

TITLE: REPAIR RESERVE HEADQUARTERS FACILITY 202

SUBMITTED	APPROVED	APPROVED
CHIEF ENGINEER	CHIEF ENGINEER	COMMANDER

DATE:	PROJECT #:	PLOT SCALE:	DRAWN BY:	DESIGNED BY:
4-30-10	049002	AS NOTED	MJP	MJM

ELECTRICAL HVAC PLAN, 1ST FLOOR

W-4497

SHT 49 OF 57

E3

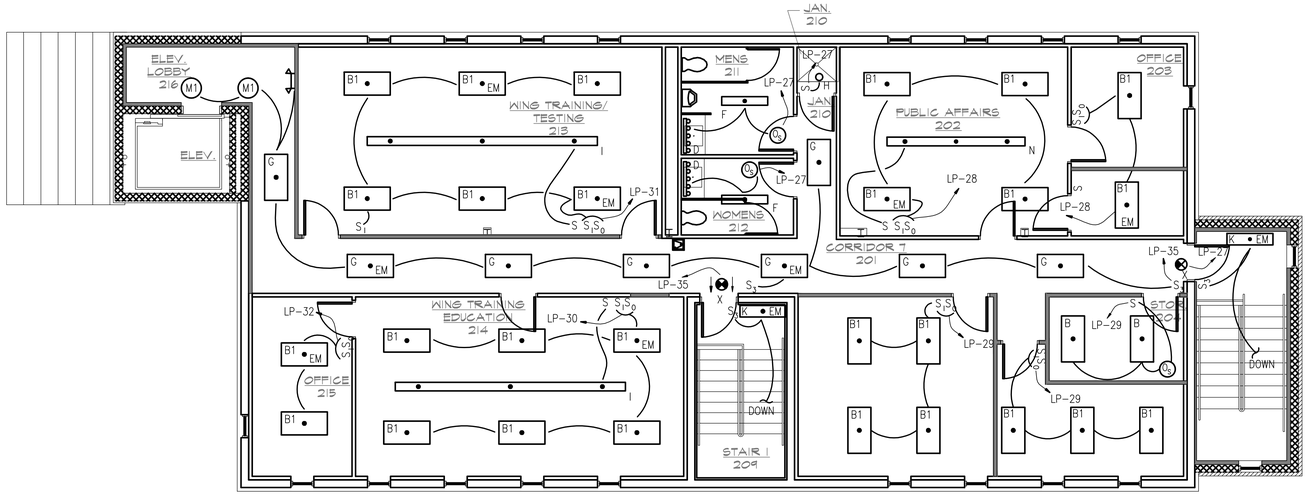

LIGHTING PLAN, 2ND FLOOR

SCALE 3/16"=1'-0"

PN

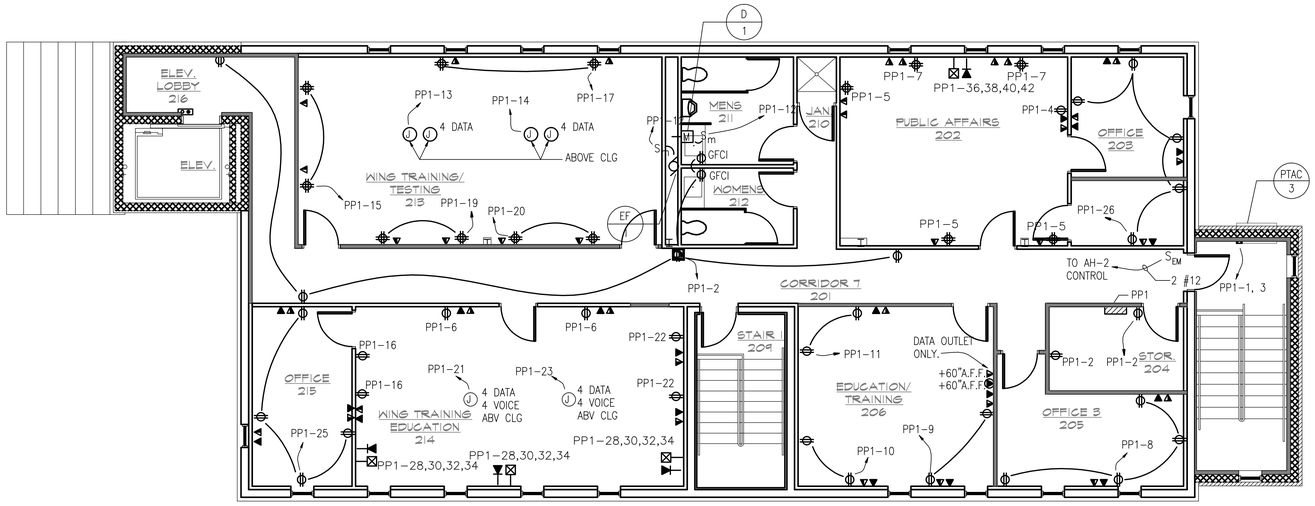

POWER PLAN, 2ND FLOOR

SCALE 3/16"=1'-0"

PN

NOTES:
1. REFER TO DRAWING E-5 FOR PANEL SCHEDULE.
2. REFER TO DRAWING E-0.1 & E-0.2 FOR NOTES AND SPECIFICATIONS.
3. CONTRACTOR SHALL COORDINATE ALL DEVICE LOCATIONS WITH FURNITURE LAYOUT.

REV	DATE	DESCRIPTION	DRAWN	APPRD
B	01JUL10	ISSUED FOR BID	SJL	CDS
A	11MAY10	ISSUED FOR REVIEW	SJL	CDS

AIR MOBILITY COMMAND
DOVER AIR FORCE BASE, DELAWARE

TITLE: REPAIR RESERVE HEADQUARTERS FACILITY 202

SUBMITTED	APPROVED	APPROVED
CHIEF ENGINEER	CHIEF ENGINEER	COMMANDER

DATE:	PROJECT #:	PLOT SCALE:	DRAWN BY:	DESIGNED BY:
4-30-10	049002	AS NOTED	MJP	MJM

ELECTRICAL POWER & LIGHTING PLAN, 2ND FLOOR

W-4497

SHT 50 OF 57

E4

22 KAIC

PANEL NO. PP TYPE 120/208V 3ø, 4W

AREA 1ST FL. ELEC. RM MAIN LUG 225A

DESCRIPTION	BRKR SIZE	CIR NO	CIR NO	BRKR SIZE	DESCRIPTION
RECEPT-118	20A	1	2	20A	RECEPT-118
RECEPT-114	20A	3	4	20A	RECEPT-114
RECEPT-113	20A	5	6	20A	RECEPT-113
RECEPT-115	20A	7	8	20A	RECEPT-115
RECEPT-150	20A	9	10	20A	RECEPT-149
RECEPT-148	20A	11	12	20A	RECEPT-148
POWER POLE-148	20A	13	14	20A	POWER POLE-148
RECEPT-152	20A	15	16	20A	RECEPT-152
RECEPT-VENDING	20A	17	18	20A	RECEPT-155
RECEPT-153	20A	19	20	20A	SERVER ROOM
RECEPT-SERVER ROOM	20A	21	22	20A	SERVER ROOM
RECEPT-105	20A	23	24	20A	RECEPT-105
RECEPT-103	20A	25	26	20A	RECEPT-101
RECEPT-101	20A	27	28	20A	RECEPT-106
RECEPT-GENERAL	20A	29	30	20A	RECEPT-104
RECEPT-102	20A	31	32	20A	RECEPT-102
RECEPT-102	20A	33	34	20A	RECEPT-112
RECEPT-112	20A	35	36	20A	RECEPT-HALLWAY
RECEPT-119	20A	37	38	20A	RECEPT-121
RECEPT-122	20A	39	40	20A	RECEPT-147
RECEPT-123	20A	41	42	20A	RECEPT-101
RECEPT-108	20A	43	44	20A	EXTERIOR RECEPT.
EF-4	20A	45	46	20A	RECEPT-145 7 144
RECEPT-117	20A	47	48	20A	RECEPT-117
RECEPT-120	20A	49	50	20A	POWER POLE 120
RECEPT-120	20A	51	52	20A	POWER POLE 120
RECEPT-124	20A	53	54	20A	PROJECTION 125
RECEPT-124	20A	55	56	20A	PROJECTION 125
RECEPT-COPY/FAX	20A	57	58	20A	PROJECTION 125
RECEPT-COPY/FAX	20A	59	60	20A	RECEPT-129
RECEPT-COPY/FAX	20A	61	62	20A	RECEPT-129
RECEPT-128 & 132	20A	63	64	20A	POWER POLE 129
RECEPT-130	20A	65	66	20A	RECEPT-131
PTAC-1	20A	67 / 69	68 / 70	20A	PTAC-2
P-3	20A	71	72	20A	D-5,D-7,D-8
RECEPT-137	20A	73	74	20A	RECEPT-137
RECEPT-137	20A	75	76	20A	RECEPT-138
RECEPT-142	20A	77	78	20A	RECEPT-138
ELEVATOR CAR	20A	79	80	20A	ELEVATOR SUMP PUMP
RECEPT-140 (CLASSIFIED)	20A	81	82	20A	GFP-1
RECEPT-139	20A	83	84	20A	SPARE

SQUARE D TYPE NQ

NEW RECEPTACLE PANEL

22 KAIC

PANEL NO. PP-2 TYPE 120/208V 3ø, 4W

AREA 1ST FL. ELEC. RM MAIN LUG 225A

DESCRIPTION	BRKR SIZE	CIR NO	CIR NO	BRKR SIZE	DESCRIPTION
VAV 4,5,6,7,12	20A	1	2	20A	VAV 8,13,14,15,16
VAV 17,22,23,24,21	20A	3	4	20A	VAV 20,19,11,10
VAV 3,2,1,9	20A	5	6	20A	RECEPT-MTG RM 124
RECEPT-RM 105	20A	7	8	20A	RECEPT-MTG RM 124
RECEPT-106 CLOSET	20A	9	10	20A	RECEPT-MTG RM 124
DISTRESS ALARM PANEL	20A	11	12	20A	RECEPT-MTG RM 124
MODULAR FURNITURE	20A	13 / 15	14 / 16	20A	RECEPT-MTG RM 124
(I) MODULAR FURNITURE	20A	17 / 19	18 / 20	20A	RECEPT-MTG RM 124
MODULAR FURNITURE	20A	21 / 23	22 / 24	20A	COMMAND SECTION
(I) MODULAR FURNITURE	20A	25 / 27	26 / 28	20A	CEILING FAN POWER
RM 112 PROJECTOR	20A	29	30	20A	CEILING FAN POWER
SPARE	20A	31	32	20A	CEILING FAN POWER
SPARE	20A	33	34	20A	SPARE
SPARE	20A	35	36	20A	SPARE
SPARE	20A	37	38	20A	SPARE
SPARE	20A	39	40	20A	SPARE
SPARE	20A	41	42	20A	SPARE
SPARE	20A	43	44	15A	SPARE
SPARE	20A	45	46	15A	SPARE
SPARE	20A	47	48	15A	SPARE
SPARE	20A	49	50	15A	SPARE
SPABE	20A	51	52	15A	SPARE
SPACE	–	53	54	–	SPACE
SPACE	–	55	56	–	SPACE
SPACE	–	57	58	–	SPACE
SPACE	–	59	60	–	SPACE
SPACE	–	61	62	–	SPACE
SPACE	–	63	64	–	SPACE
SPACE	–	65	66	–	SPACE
SPACE	–	67	68	–	SPACE
SPACE	–	69	70	–	SPACE
SPACE	–	71	72	–	SPACE
SPACE	–	73	74	–	SPACE
SPACE	–	75	76	–	SPACE
SPACE	–	77	78	–	SPACE
SPACE	–	79	80	–	SPACE
SPACE	–	81	82	–	SPACE
SPACE	–	83	84	–	SPACE

SQUARE D TYPE NQ

NEW RECEPTACLE PANEL

NOTE:
1. CONTRACTOR SHALL FURNISH AND INSTALL AN ADDITIONAL UNGROUNDED NEUTRAL BUS TO SERVE AS AN ISOLATED GROUND BUS
2. (I) INDICATES CIRCUIT CONNECTED TO ISOLATE GROUND BUS.

22 KAIC

PANEL NO. LP TYPE 120/208V 3ø, 4W

AREA 1ST FL. ELEC. RM MAIN LUG 225A

DESCRIPTION	BRKR SIZE	CIR NO	CIR NO	BRKR SIZE	DESCRIPTION
RM 148, 149, 150	20A	1	2	20A	RM 152, 153, 154, 155
RM 156,157,158,106,109, 110	20A	3	4	20A	RM 103, 104, 105, 106
CORRIDOR 107	20A	5	6	20A	RM 101, 102, 112
CORRIDOR 147, 111 VESTIBULE 100, 151	20A	7	8	20A	RM 113, 115, 117
RM 114, 116, 118	20A	9	10	20A	CORRIDORS 123,127,136, 146
RM 120	20A	11	12	20A	RM 119, 121, 122
FIRE ALARM CONTROL PANEL	20A	13	14	20A	RM 124 FLOOR
FIRE ALARM CONTROL PANEL	20A	15	16	20A	RM 124 INCAND RM 125, 126
RM 128, 129	20A	17	18	20A	RM 130, 131, 132
STAIRS 135, 133	20A	19	20	20A	RM 137, 138
RM 139,140,141,142,143, 144, 145, ELEVATOR PIT	20A	21	22	20A	OUTDOOR WALL PACKS
OUTDOOR WALL PACKS	20A	23	24	20A	OUTDOOR WALL PACKS
SPARE	20A	25	26	20A	OUTDOOR WALL PACKS
ROOM 201, 211, 212	20A	27	28	20A	RM 202, 203
RM'S 204, 205, 206, 207, 208	20A	29	30	20A	ROOM 214
ROOM 213	20A	31	32	20A	ROOM 215
MASS NOTIFICATION CONTROL	20A	33	34	20A	ATC PANEL
(L) EXIT SIGNS	20A	35	36	20A	SPARE
SPARE	20A	37	38	20A	SPARE
SPARE	20A	39	40	20A	SPARE
SPARE	20A	41	42	20A	SPARE

SQUARE D TYPE NQ

NEW LIGHTING PANEL

(L) HANDLE CLAMP, SQ-D CAT #Q01LO

10 KAIC

PANEL NO. PP-1 TYPE 120/208V 3ø, 4W

AREA 2ND FL. STOR RM MAIN LUG 225A

DESCRIPTION	BRKR SIZE	CIR NO	CIR NO	BRKR SIZE	DESCRIPTION
PTAC-3	20A	1 / 3	2	20A	RM'S 201, 211, 212, 204
			4	20A	ROOM 202
ROOM 202	20A	5	6	20A	ROOM 202
ROOM 202	20A	7	8	20A	ROOM 205
ROOM 206	20A	9	10	20A	ROOM 207
ROOM 208	20A	11	12	20A	EXHAUST FAN
ROOM 213 J-BOX	20A	13	14	20A	ROOM 213 J-BOX
ROOM 213	20A	15	16	20A	ROOM 214
ROOM 213	20A	17	18	20A	SPARE
ROOM 213	20A	19	20	20A	ROOM 213
ROOM 214 J-BOX	20A	21	22	20A	ROOM 214
ROOM 214 J-BOX	20A	23	24	20A	SPARE
ROOM 215	20A	25	26	20A	SPARE
SPARE	20A	27	28 / 30	20A	MODULAR FURNITURE
SPARE	20A	29			
SPARE	20A	31	32 / 34	20A	MODULAR FURNITURE (I)
SPARE	20A	33			
SPARE	20A	35	36 / 38	20A	MODULAR FURNITURE
SPARE	20A	37			
SPARE	20A	39	40 / 42	20A	MODULAR FURNITURE (I)
SPARE	20A	41			

SQUARE D TYPE NQ

NEW RECEPTACLE PANEL

NOTE:
1. CONTRACTOR SHALL FURNISH AND INSTALL AN ADDITIONAL UNGROUNDED NEUTRAL BUS TO SERVE AS AN ISOLATED GROUND BUS
2. (I) INDICATES CIRCUIT CONNECTED TO ISOLATE GROUND BUS.

LIGHTING FIXTURE SCHEDULE

TYPE	MANUFACTURER	MODEL NO.	LAMPS	MOUNTING	DESCRIPTION	REMARKS
A	HUBBELL LIGHTING	VWX-302*	300W INCAND	WALL MOUNTED	INCANDESCENT, VAPORTITE FIXTURES, WITH GLOBE & GUARD, DAMP LOCATION LISTED	
B	COLUMBIA LIGHTING	P224-232G-LD26-S -EB8LH 120-*	(2) F32T8	RECESSED LAY-IN	2' X 4' FLUORESCENT FIXTURE, STEEL HOUSING, WHITE ENAMEL FINISH, 3 INCH 12 CELL PARABOLIC SEMI-SPECULAR ANODIZED ALUMINUM LOUVER & ELECTRONIC BALLAST	* - EM = EMERGENCY BATTERY PACK AS NOTED ON DWGS
B1	COLUMBIA LIGHTING	P224-332G-LD36-S -EB8LH 120-*	(3) F32T8	RECESSED LAY-IN	2' X 4' FLUORESCENT FIXTURE, STEEL HOUSING, WHITE ENAMEL FINISH, 3 INCH 18 CELL PARABOLIC SEMI-SPECULAR ANODIZED ALUMINUM LOUVER & ELECTRONIC BALLASTS FOR INBOARD/OUTBOARD SWITCHING	* - EM = EMERGENCY BATTERY PACK AS NOTED ON DWGS
B2	COLUMBIA LIGHTING	P224-432G-LD48-S -EB8LH 120-*	(4) F32T8	RECESSED LAY-IN	2' X 4' FLUORESCENT FIXTURE, STEEL HOUSING, WHITE ENAMEL FINISH, 3 INCH 24 CELL PARABOLIC SEMI-SPECULAR ANODIZED ALUMINUM LOUVER & ELECTRONIC BALLASTS FOR INBOARD/OUTBOARD SWITCHING	* - EM = EMERGENCY BATTERY PACK AS NOTED ON DWGS
C	HUBBELL LIGHTING	WGH-70H	(1) 70MH	WALL MOUNTED	WALL PACK LIGHTING FIXTURE, ALUMINUM HOUSING, GLASS LENS, BRONZE FINISH	
D	PROGRESS LIGHTING	P7133-30EB	(2) F32T8	WALL MOUNTED	4' FLUORESCENT FIXTURE, RIBBED WHITE ACRYLIC DIFFUSER & HPF BALLAST	MOUNT 12" ABOVE MIRROR
E	DUAL-LITE	LM SERIES LM24-120	NO LAMPS	WALL MOUNTED	EMERGENCY LIGHTING FIXTURE, HIGH CAPACITY MAINTENANCE FREE BATTERY, SELF TESTING SELF DIAGNOSTIC, 120V AC INPUT, 12V DC OUTPUT, FOR REMOTE LAMPS	
E1	DUAL-LITE	OMSDB1208	(2) 8W HALOGEN		EMERGENCY LIGHTING REMOTE TWIN LAMP HEAD OUTDOOR, SEALED BEAM, BLACK FINISH, 12V DC	
F	COLUMBIA LIGHTING	WC4-232-EB 8LH120	(2) F32T8	SURFACE	4' FLUORESCENT FIXTURE, STEEL HOUSING, WHITE ENAMEL FINISH, CLEAR ACRYLIC PRISMATIC DIFFUSER & ELECTRONIC BALLAST	
F1	COLUMBIA LIGHTING	WC4-432-EB120	(4) F32T8	SURFACE	SAME AS TYPE F EXCEPT W/4 LAMPS	
G	COLUMBIA LIGHTING	JT824-232G-FSA12 -EB8LH120-*	(2) F32T8	RECESSED LAY-IN	2' X 4' FLUORESCENT FIXTURE, STEEL HOUSING, WHITE ENAMEL FINISH, PATTERN 12 ACRYLIC LENS & ELECTRONIC BALLAST	* - EM = EMERGENCY BATTERY PACK AS NOTED ON DWGS
	COLUMBIA LIGHTING	JT824-332G-FSA12 -EB8LH120-*	(3) F32T8	RECESSED LAY-IN	2' X 4' FLUORESCENT FIXTURE, STEEL HOUSING, WHITE ENAMEL FINISH, PATTERN 12 ACRYLIC LENS & ELECTRONIC BALLASTS FOR INBOARD/OUTBOARD SWITCHING	* - EM = EMERGENCY BATTERY PACK AS NOTED ON DWGS
	PRESCOLITE	IBX13ICAT-TB60	(1) 13W QUAD CFL	RECESSED	6 INCH FLUORESCENT FIXTURE, IC RATED, STEEL HOUSING, STEP BLACK BAFFLE & ELECTRONIC BALLAST	
	FINELITE	S16-WCB-20-2T8-SC -91W- STO-120-AC-FE	(10) F32T8	CABLE SUSPENDED	20' FLUORESCENT FIXTURE, DIRECT/INDIRECT, STEEL HOUSING, WHITE FINISH, WHITE ALUMINUM REFLECTOR, SOFT TOP OPTICS, 87 CELL WHITE BAFFLE & ELECTRONIC BALLAST	
	COLUMBIA LIGHTING	IC4-232-PR-EB8 LH120-ICFC-*	(2) F32T8	PENDANT CHAIN	4' INDUSTRIAL FLUORESCENT FIXTURE, STEEL HOUSING, PORCELAIN REFLECTOR, 10% UPLIGHT & ELECTRONIC BALLAST	* - EM = EMERGENCY BATTERY PACK AS NOTED ON DWGS
	COLUMBIA LIGHTING	WPM4-232-EB8 LH120	(2) F32T8	WALL MOUNTED	2' FLUORESCENT FIXTURE, STEEL HOUSING, EXTRUDED ACRYLIC DIFFUSER & ELECTRONIC BALLAST	
	FOCAL POINT	FMEC-1-1T5HO-1C -D-120-WM-TS	(1) 8X18	WALL MOUNTED	SCONCE 9" WIDE BY 13" HIGH RECTANGULAR WITH FROSTED PANEL AND TITANIUM SILVER TRIM, 120V DIMMING BALLAST.	
	PRESCOLITE	CFC8842DTHEB-DM STCB8ACL-B24	(2) CF 32TT	RECESSED	8 INCH FLUORESCENT FIXTURE, ALZAK CROSS BAFFLE WITH UPPER REFLECTOR DIMMING BALLAST	
	PRESCOLITE	CFT0832HEB STFD802H-BG	(2) CF 32TT	RECESSED	8 INCH DIA FLUORESCENT DOWNLIGHT WITH SPECULAR ALZAK REFLECTOR. 120 VOLT ELECTRONIC BALLAST. PROVIDE DRYWALL TRIM.	
	FINELITE	S16-WCB-12-2T8 -SC-91W- STO-120-AC-FE	(6) F32T8	CABLE SUSPENDED	12' FLUORESCENT FIXTURE, DIRECT/INDIRECT, STEEL HOUSING, WHITE FINISH, WHITE ALUMINUM REFLECTOR, SOFT TOP OPTICS, 87 CELL WHITE BAFFLE & ELECTRONIC BALLAST	
	PRESCOLITE	CFR6126EB-PL -WT-TRG	(1) CF26 QUAD	RECESSED	6" HORIZONTAL QUADTUBE DOWNLIGHT, 120V ELECTRONIC BALLAST ALZAK REFLECTOR W/REGRESSED PRISMATIC LENS. PROVIDE WITH TRIM RING GASKET AND PAINTED WHITE TRIM.	
	DUAL LITE	SE SEMPRA SERIES	LED	CEILING OR WALL	EXIT SIGN FIXTURE, LED LAMPS, DIE CAST ALUMINUM HOUSING COLOR AND FINISH BY ARCHITECT, RED LETTERS, 120 VOLT WITH BATTERY FOR EMERGENCY OPERATION, DIRECTION ARROWS AS INDICATED ON PLANS UNIVERSAL SINGLE/DOUBLE FACE	

UNIT MTG. SPACE (IN.)

PANEL NO. MDP TYPE 120/208V 3ø, 4W

AREA 1ST FL. ELEC. RM. MAIN BKR 1200A

UNIT MTG. SPACE (IN.)	DESCRIPTION	C.B. SIZE	CIR NO	CIR NO	C.B. SIZE	DESCRIPTION	UNIT MTG. SPACE (IN.)
4.5"	PANEL PP	225A	1	2	100A	SPARE	4.5"
4.5"	PANEL PP-1	100A	3	4	100A	AHU-1	4.5"
4.5"	AHU-2	50A	5	6	225A	PANEL PP-2	4.5"
6"	CH-1	350A	7	8	225A	PANEL HP	4.5"
4.5"	PANEL LP	150A	9	10	15A	E-MON METER	4.5"
4.5"	SPARE	225A	11	12	100A	ELEVATOR	4.5"
3"	SPACE	–	13	14	–	160KA SURGE PROTECTOR	13.5
3"	SPACE	–	15	16			
9"	MAIN	1200A	17	18			
54" TOTAL	SQUARE 'D' I-LINE SERVICE ENTRANCE RATED PANEL HCR-U NEMA 1 ENCLOSURE, 86"H x 44"W x 9.5"D, SOLID NEUTRAL 42KAIC @208Y/120V						54" TOTAL

NEW DISTRIBUTION PANEL

22 KAIC

PANEL NO. HP TYPE 120/208V 3ø, 4W

AREA 1ST FL. ELEC. RM MAIN LUG 225A

DESCRIPTION	BRKR SIZE	CIR NO	CIR NO	BRKR SIZE	DESCRIPTION
WH-2	30A	1 / 3	2 / 4	25A	CAC-1 INDOOR
WH-1	45A	5 / 7 / 9	6	15A	MS-2
			8	20A	ELEVATOR SHUNT TRIP
			10 / 12	25A	CAC-1 OUTDOOR
MS-1	15A	11			
HWSP-1	40A	13 / 15 / 17	14	20A	SPARE
			16	20A	SPARE
			18	20A	SPARE
HWSP-2	40A	19 / 21 / 23	20	20A	SPARE
			22	20A	SPARE
			24	–	SPACE
SPACE	–	25	26	–	SPACE
SPACE	–	27	28	–	SPACE
SPACE	–	29	30	–	SPACE
SPACE	–	31	32	–	SPACE
SPACE	–	33	34	–	SPACE
SPACE	–	35	36	–	SPACE
SPACE	–	37	38	–	SPACE
SPACE	–	39	40	–	SPACE
SPACE	–	41	42	–	SPACE

SQUARE D TYPE NQ

NEW POWER PANEL

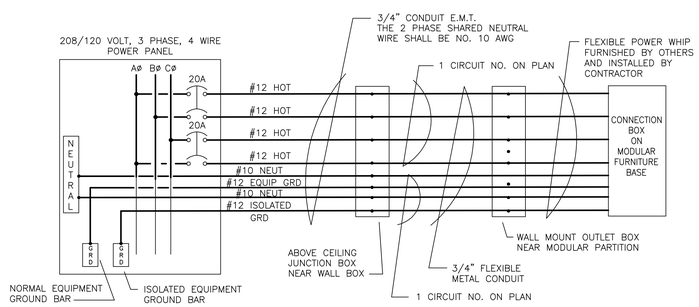

8 WIRE MODULAR PARTITION WIRING DIAGRAM 2+2 (1/E-5)

SCALE NONE

FURNITURE NOTES:
1. THE FURNITURE WIRING WAS DESIGNED BASED ON A 8 WIRE SYSTEM (4 HOTS, 2 OVERSIZED NEUTRALS, 1 EQUIPMENT GROUND AND 1 ISOLATED GROUND) AS SHOWN WITH 12 CUBICLES PER 8 WIRE CIRCUIT. THE CONTRACTOR SHALL TAKE THE RESPONSIBILITY OF REDESIGNING THE LAYOUT IF THE FURNITURE IS DIFFERENT THAN ORIGINAL DESIGN PARAMETERS.

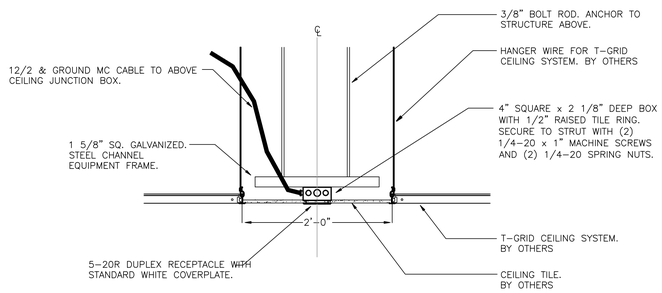

FLUSH MOUNTED CEILING RECEPTACLE (2/E-5)

SCALE NONE

NOTE:
1. PROVIDE ADDITIONAL GALVANIZED STEEL EQUIPMENT CHANNEL AS REQUIRED TO SUPPORT THE RECEPTACLE.
2. DOUBLE NUT THE BOLT ROD ON BOTH ENDS.
3. SIZE OF THE TILE RING WILL BE DETERMINED BY THE THICKNESS OF THE CEILING TILE.
4. COORDINATE WITH RACK CONTRACTOR FOR EXACT LOCATION OF RECEPTACLE

REV	DATE	DESCRIPTION	DRAWN	APPRD
B	01JUL10	ISSUED FOR BID	SJL	CDS
A	11MAY10	ISSUED FOR REVIEW	SJL	CDS

AIR MOBILITY COMMAND
DOVER AIR FORCE BASE, DELAWARE

TITLE: REPAIR RESERVE HEADQUARTERS FACILITY 202

SUBMITTED	APPROVED	APPROVED
CHIEF ENGINEER	CHIEF ENGINEER	COMMANDER

DATE:	PROJECT #:	PLOT SCALE:	DRAWN BY:	DESIGNED BY:
4-30-10	049002	AS NOTED	MJP	MJM

ELECTRICAL SCHEDULES

W-4497

SHT 51 OF 57

E5

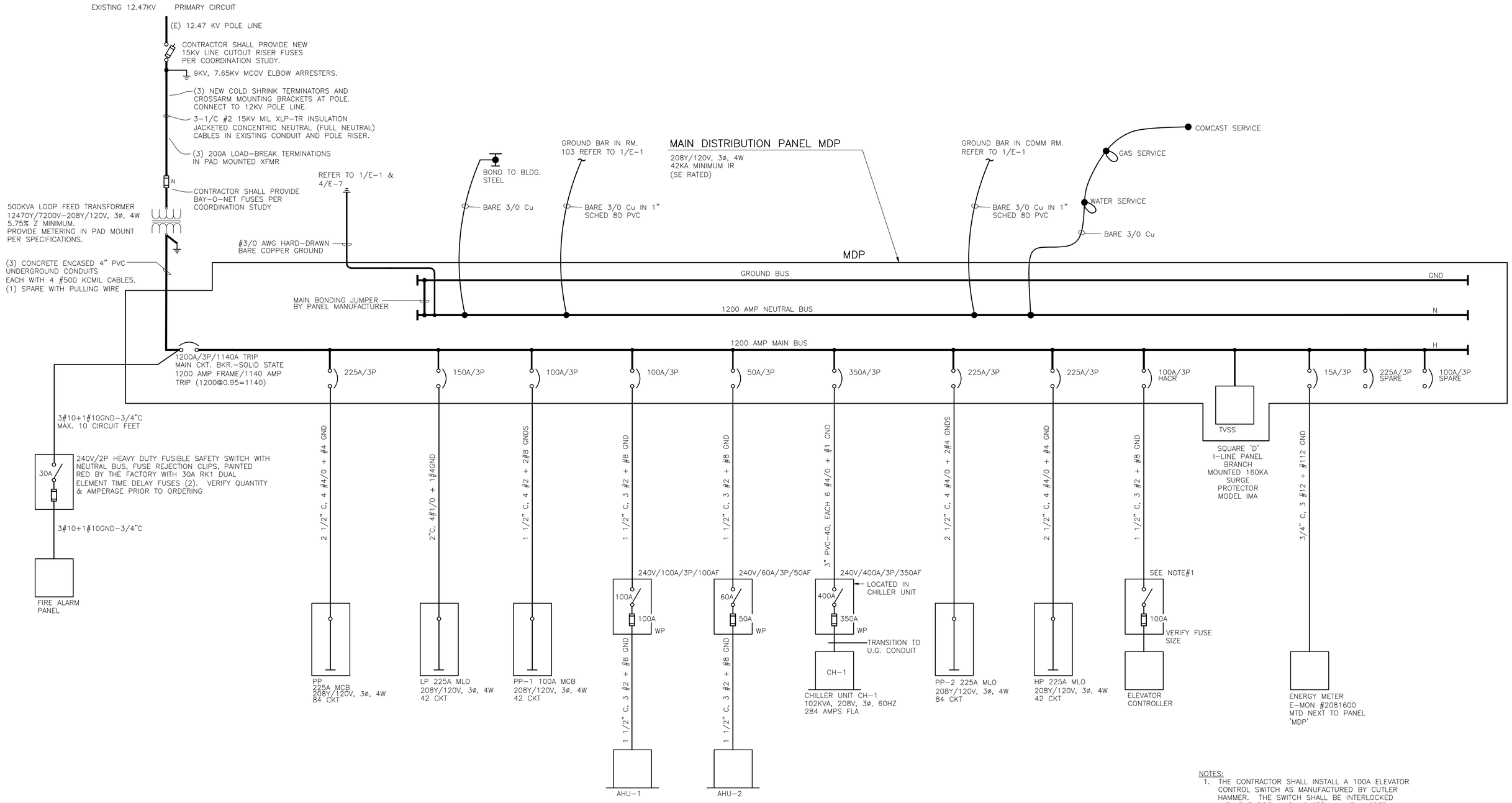

NOTES:

1. THE CONTRACTOR SHALL INSTALL A 100A ELEVATOR CONTROL SWITCH AS MANUFACTURED BY CUTLER HAMMER. THE SWITCH SHALL BE INTERLOCKED WITH THE FIRE ALARM SYSTEM, HAVE A GREEN PILOT LIGHT AND BE IN A NEMA 1 ENCLOSURE. CUTLER HAMMER#ES3T2R2GF3NB. COORDINATE FIRE SAFETY INTERFACE RELAY COIL VOLTAGE AND 1P OR 3P CONFIGURATION OF FIRE ALARM VOLTAGE MONITORING RELAY WITH FIRE ALARM CONTRACTOR.

REV	DATE	DESCRIPTION	DRAWN	APPRD
B	01JUL10	ISSUED FOR BID	SJL	CDS
A	11MAY10	ISSUED FOR REVIEW	SJL	CDS

AIR MOBILITY COMMAND
DOVER AIR FORCE BASE, DELAWARE

TITLE: REPAIR RESERVE HEADQUARTERS FACILITY 202

SUBMITTED	APPROVED	APPROVED
CHIEF ENGINEER	CHIEF ENGINEER	COMMANDER

DATE:	PROJECT #:	PLOT SCALE:	DRAWN BY:	DESIGNED BY:
4-30-10	049002	AS NOTED	MJP	MJM

ELECTRICAL RISER DIAGRAM

W-4497

SHT 52 OF 57

E6

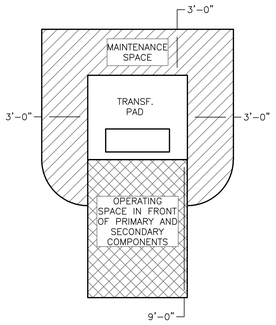

NOTE:
1. OPERATING & MAINTENANCE SPACE TO BE FREE OF OBJECTS HIGHER THAN PAD.

CONCRETE:

1. ALL CONCRETE WORK SHALL CONFORM TO ACI 301 AND ACI 318 (LATEST EDITION).
2. CONCRETE COMPRESSIVE STRENGTH AT 28 DAYS SHALL BE:

   SLABS: 4,500 PSI

   ALL EXPOSED CONCRETE SHALL BE AIR-ENTRAINED IN ACCORDANCE WITH THE REQUIREMENTS OF ACI 301.
3. CONCRETE SHALL NOT BE PLACED IN WATER OR ON FROZEN GROUND.
4. REINFORCING BARS SHALL CONFORM TO ASTM A615, GRADE 60 DEFORMED BARS AND SHALL BE DETAILED, FABRICATED AND PLACED IN ACCORDANCE WITH ACI 315, LATEST EDITION.
5. COMPLETE SHOP DRAWINGS AND SCHEDULES OF ALL REINFORCING STEEL SHALL BE PREPARED BY THE CONTRACTOR AND SUBMITTED TO THE ENGINEER FOR REVIEW. REFER TO SPECIFICATIONS.
6. REINFORCEMENT SHALL BE CONTINUOUS AROUND CORNERS AND AT INTERSECTIONS.
7. WELDING OF REINFORCEMENT IS NOT PERMITTED.
8. LAP ALL BARS MINIMUM 40 DIAMETERS.
9. OMIT REINFORCEMENT IN DUCT WINDOW AND WITHIN 2" OF DUCT WINDOW.
10. THE PAD SHALL BE LEVEL.

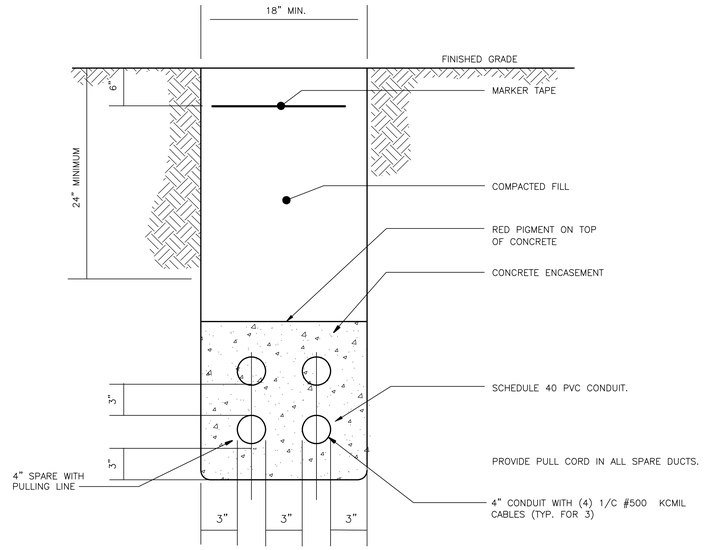

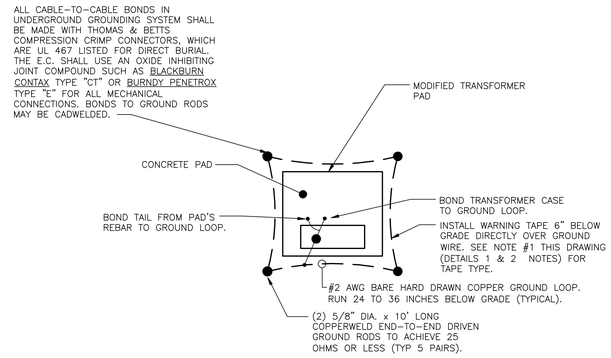

TRANSFORMER CLEARANCES DETAIL (1/E-7)

SCALE NONE

PN

UNDERGROUND CONDUIT DETAIL - 208 VOLT (2/E-7)

SCALE NONE CONDUITS BETWEEN PAD-MOUNT TRANSFORMER & PANEL MDP

TRANSFORMER PAD GROUNDING DETAIL (3/E-7)

SCALE NONE

PN

PAD NOTES:

1. CONTRACTOR SHALL EXTEND/STRENGTHEN EXISTING TRANSFORMER PAD TO ACCOMMODATE NEW TRANSFORMER AND ITS PRIMARY AND SECONDARY CONDUIT STUB-UP REQUIREMENTS.
2. FINAL PAD INSTALLATION SHOULD BE BASED ON THE APPROVED PAD-MOUNT SHOP DRAWINGS.
3. SEE DETAIL 3/E-7 FOR GROUNDING DETAILS.
4. SEE DETAIL E-1 FOR PADS' LOCATION.
5. ALL SECONDARY CONDUIT BENDS SHALL BE INSTALLED AND TERMINATED FLUSH WITH THE TOP OF THE TRANSFORMER PAD.
6. INSTALLATION SHALL BE IN ACCORDANCE WITH THE REQUIREMENTS OF THE NEC.
7. DUCT WINDOW SHALL NOT BE FILLED WITH CONCRETE.

PAD RE-GROUNDING NOTES:

1. PROVIDE NO. 2 AWG BARE HARD DRAWN COPPER GROUND LOOP AROUND PAD 1-1/2' BELOW GRADE.
2. PROVIDE (5) PAIRS OF ⅝" x 10' COPPER CLAD STEEL GROUND RODS. ONE AT EACH CORNER OF PAD GROUND LOOP, ONE PAIR INSIDE PAD WINDOW, MORE RODS WILL BE REQUIRED AT SOME LOCATION(S) IF A MAXIMUM 25 OHMS RESISTANCE IS NOT OBTAINED AT ANY LOCATION WITH TWO RODS.
3. BOND TRANSFORMER CASE, AND PADS' REBAR TO GROUNDING SYSTEM WITH #2 AWG CU.
4. E.C. SHALL TEST GROUNDS. SEE NOTE #2 ABOVE AND SEE SPECIFICATIONS.

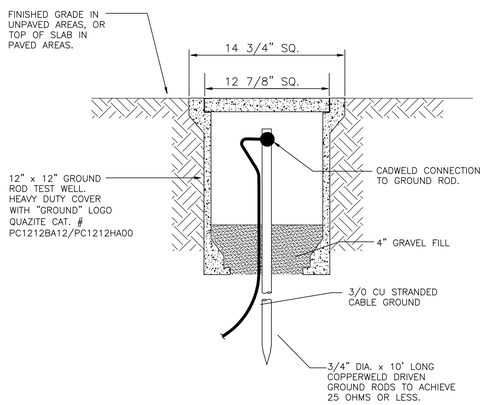

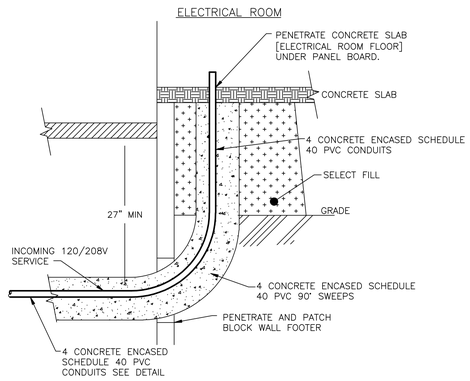

GROUND ROD/TEST WELL INSTALLATION DETAIL (4/E-7)

SCALE NONE

FOOTER AND SLAB PENETRATION DETAIL (5/E-7)

SCALE NONE

NOTES

1. BURIED WARNING MARKER TAPE SHALL BE FOIL PACKED METALLIC DETECTABLE TAPE, 6 INCHES WIDE FOR DUCT BANKS AND 3 INCHES WIDE FOR GROUNDING LOOP WIRING. RED COLOR WITH WORDS ELECTRIC LINE OR ORANGE COLOR WITH WORDS TELEPHONE LINE. T & B TYPE "WBT" PROTECT-A-LINE BURIAL TAPES, CAT.# NAFXXXX.
2. BENDS IN THE CONDUIT SHOULD BE MADE OF A LARGE RADIUS.
3. ALL METALLIC CONDUITS SHALL BE PROPERLY GROUNDED.
4. AT LEAST 12" SPACING SHOULD BE MAINTAINED BETWEEN NON-METALLIC CONDUIT AND GROUNDING CONDUCTORS INSTALLED FOR LIGHTNING PROTECTION.
5. ALUMINUM CONDUIT IS NOT PERMITTED FOR DIRECT BURIAL.
6. WHERE RIGID STEEL CONDUIT IS INSTALLED UNDERGROUND IT SHALL BE U.L. LISTED FOR DIRECT BURIAL APPLICATION.
7. DUE TO MAGNETIC INDUCTION, UNDER NO CIRCUMSTANCES SHALL REINFORCEMENT ROD OR MAGNETIC TYPE MATERIAL BE USED TO SUPPORT CONDUIT OR USED BETWEEN DUCT LINES.
8. RIGID GALV. STEEL CONDUIT SHALL BE USED FOR EXTENSIONS FROM UNDERGROUND DUCTS WHICH TERMINATE ABOVE GRADE. PVC SHALL NOT BE USED ABOVE GRADE.
9. ANY 90° SWEEPS SHALL BE RIGID GALVANIZED STEEL OR CONCRETE ENCASED PVC MAY BE USED PER DETAIL 5/E-7.
10. ALL PVC CONDUIT SHALL BE U.L. OR ETL LISTED FOR USE BELOW GRADE.

LOCATION OF NEW AND EXISTING UNDERGROUND UTILITIES SHOWN FOR CONTRACTOR CONVENIENCE. CONTRACTOR IS RESPONSIBLE FOR VERIFYING AND LOCATING ALL UNDERGROUND UTILITIES BEFORE EXCAVATION.

REV	DATE	DESCRIPTION	DRAWN	APPRD
2	01JUL10	ISSUED FOR BID	SJL	CDS
1	11MAY10	ISSUED FOR REVIEW	SJL	CDS

AIR MOBILITY COMMAND
DOVER AIR FORCE BASE, DELAWARE

TITLE: REPAIR RESERVE HEADQUARTERS FACILITY 202

SUBMITTED	APPROVED	APPROVED
CHIEF ENGINEER	CHIEF ENGINEER	COMMANDER

DATE:	PROJECT #:	PLOT SCALE:	DRAWN BY:	DESIGNED BY:
4-30-10	049002	AS NOTED	MJP	MJM

ELECTRICAL DETAILS

W-4497

SHT 53 OF 57

E7

ABBREVIATIONS

AFF	ABOVE FINISHED FLOOR
AD	ACCESS DOOR
AHU	AIR HANDLING UNIT
AP	ACCESS PANEL
ATC	ACOUSTICAL TILE CEILING
BOS	BOTTOM OF STEEL
CA	COMPRESSED AIR
CCCT	CLOSED CIRCUIT COOLING TOWER
CD	CONDENSATE DRAIN
CH	CHILLER
CI	CAST IRON
CLR	CLEARANCE
CLW	CLOTHES WASHER
CT	COOLING TOWER
CU	COPPER
dB	DECIBELS
DIP	DUCTILE IRON PIPE
DN	DOWN
DW	DISH WASHER
DWV	DRAINAGE/WASTE/VENT
(E)	EXISTING
ET	EXPANSION TANK
EWC	ELEC. WATER COOLER
GPM	GALLONS PER MINUTE
GS	GALVANIZED STEEL
Hp	HORSE POWER
ID	INSIDE DIAMETER
LAV	LAVATORY
MAX	MAXIMUM
MB	MOP BASIN
MS	MINI SOUNDER
MIN	MINIMUM
NPT	NATIONAL PIPE THREAD
OD	OUTSIDE DIAMETER
P	PUMP
PE	POLYETHYLENE
PVC	POLYVINYL CHLORIDE
RD	ROOF DRAIN
SCH 40	SCHEDULE 40
SCH 80	SCHEDULE 80
SS 304	STAINLESS STEEL, TYPE 304
SS 316	STAINLESS STEEL, TYPE 316
SH	SHOWER
SK	SINK
STL	STEEL
TM	TAMPER SWITCH
VAC	VACUUM
W/	WITHOUT
WC	WATER CLOSET
WH	WATER HEATER
W/O	WITHOUT
WFI	WATER FLOW INDICATOR

PIPING

	DEMOLITION
	EXISTING TO REMAIN
	COLD WATER
CW	COLD WATER BELOW GRADE
FP	FIRE PROTECTION PIPE, WET SYSTEM
FP (D)	FIRE PROTECTION PIPE, DRY SYSTEM
FP (G)	FIRE PROTECTION PIPE, GLYCOL SYSTEM
FP	FIRE PROTECTION PIPE BELOW GRADE
	PIPE RISER UP
	PIPE ANGLED / ROLLED UP
	PIPE RISER DOWN
	PIPE ANGLED / ROLLED DOWN
	PIPE TEE DOWN
	REDUCER
	UNION
	FLOW DIRECTION
	CAP OR PLUG
	CUT PIPE
	PIPE SLEEVE
	PUMP
	PRESSURE GAUGE
	FLOW SWITCH
PR	PRESSURE REGULATOR
	GATE VALVE
	ANGLE VALVE
	BALL VALVE
SSO	SUPERVISORY SHUT OFF VALVE
TEST	TEST VALVE
	DRY PIPE VALVE
	ALARM CHECK VALVE
	CHECK VALVE
	DOUBLE CHECK VALVE
	POST INDICATOR VALVE
	FIRE HYDRANT
	SIAMESE WALL CONNECTION
	SIAMESE YARD CONNECTION

TERMINALS

	PENDENT SPRINKLER HEAD
	UPRIGHT PENDENT SPRINKLER HEAD
	SPRINKLER HEAD WITH GUARD
	HORIZONTAL SPRINKLER HEAD WITH ESCUTCHEON
	HORIZONTAL SPRINKLER HEAD

CONTROLS

	EXISTING PULL STATION
FCP	FIRE CONTROL PANEL
F	MANUAL FIRE PROTECTION PULL STATION
S	SMOKE DETECTOR
D	DUCT DETECTOR
	FIRE HORN
HS-3	FIRE HORN AND STROBE
	FIRE STROBE
H	HEAT DETECTOR
H A	HEAT DETECTOR-ABOVE CEILING
RM	REMOTE MICROPHONE STATION (LOCAL OPERATING CONSOL FOR MASS NOTIFICATION.)
RA	REMOTE ANNUNCIATOR PANEL
V	VOICE NOTIFICATION

MANUAL SUPPRESSION DEVICES

	FIRE EXTINGUISHER, WATER
	FIRE EXTINGUISHER, FOAM
	FIRE EXTINGUISHER, FOR LIQUID, GAS AND ELECTRIC
	FIRE EXTINGUISHER, FOR ALL FIRES BUT METAL

NOTE: ALL DASHED LINES (------) ON DEMOLITION DRAWINGS INDICATE ITEMS FOR DEMOLITION

FIRE PROTECTION SYSTEM CONSTRUCTION NOTES

THE WORK OF THIS SECTION INCLUDES, BUT IS NOT NECESSARILY LIMITED TO ALL LABOR, MATERIAL AND EQUIPMENT REQUIRED TO INSTALL AND EXTEND THE EXISTING FIRE PROTECTION SYSTEM AND ASSOCIATED EQUIPMENT. PROVIDE MATERIALS/SPECIALTIES REQUIRED FOR THE PROPER FUNCTIONING OF THE WORK. THE CONTRACTOR IS RESPONSIBLE FOR ENSURING COMPLIANCE WITH FEDERAL, STATE, AND LOCAL CODE JURISDICTIONS AND ORDNANCE AMENDMENTS.

CONTRACTOR SHALL OBTAIN CERTIFICATES OF APPROVAL AND/OR ACCEPTANCE OF THE WORK IN COMPLIANCE WITH THE STATE FIRE MARSHALL'S OFFICE AND ALL OTHER AGENCIES HAVING JURISDICTION. WORK SHALL NOT BE DEEMED COMPLETE UNTIL SUCH CERTIFICATES HAVE BEEN DELIVERED TO THE OWNER. PERMITS, LICENSES AND OTHER CHARGES THAT MAY BE REQUIRED BY THE AUTHORITIES HAVING JURISDICTION (AHJ) TO PERFORM THE WORK SHALL BE SECURED AND PAID FOR BY THE CONTRACTOR. THE CONTRACTOR SHALL GIVE ALL NOTICES AND COMPLY WITH ALL LAWS, ORDINANCES, RULES, AND REGULATIONS BEARING ON THE CONDUCT OF HIS WORK. THE FOLLOWING STANDARDS AND CODES SHALL BECOME A PART OF THESE CONSTRUCTION NOTES AS THOUGH WRITTEN OUT IN FULL AND SHALL BE COMPLIED WITH.

DELAWARE STATE FIRE PREVENTION REGULATIONS
NFPA CODES AND STANDARDS (NFPA 13, 70 & 72)
UFC 3-600-01 and 4-021-01
MANUFACTURER'S WRITTEN INSTRUCTIONS AND CATALOG DATA FURNISHED WITH OR PERTAINING TO MATERIAL OR EQUIPMENT SUPPLIED ON THIS PROJECT
UNDERWRITERS LABORATORIES REQUIREMENTS 199: AUTOMATIC SPRINKLERS FOR FIRE PROTECTION
OCCUPATIONAL SAFETY AND HEALTH ACT (OSHA)

BIDDERS ARE DIRECTED TO VISIT THE SITE AND FULLY INFORM THEMSELVES OF THE CONDITIONS UNDER WHICH THE WORK MUST BE PERFORMED. ALL TIE-IN POINTS AND EXISTING CONDITIONS INDICATED IN THE DRAWINGS ARE FOR GENERAL INFORMATION ONLY. THE CONTRACTOR SHALL VERIFY ALL SUCH CONDITIONS TO HIS SATISFACTION BEFORE BID OPENING. THE CONTRACTOR SHALL THOROUGHLY EXAMINE THE DRAWINGS, CHECK ON ALL DIMENSIONS IMMEDIATELY AFTER THE CONTRACT IS AWARDED AND OBTAIN SUCH MEASUREMENTS AND INFORMATION AS MAY BE REQUIRED TO CARRY ON THE WORK. ANY DISCREPANCIES ON THE DRAWING SHALL BE REPORTED.

SUBMITTALS:

PREPARE AND BE RESPONSIBLE FOR DRAWINGS, DOCUMENTS AND WORK REQUIRED, FOR REVIEW BY THE GOVERNMENT. SUBMITTALS SHALL SHOW, BUT NOT BE LIMITED TO THE FOLLOWING: PIPING DRAWINGS INCLUDING ALL SYSTEM RELATED COMPONENTS. HYDRAULIC CALCULATIONS. LOCATION AND RATING OF SPRINKLER HEADS. PRODUCT DATA SHOWING TYPE, MODEL, LOCATION, AND FUNCTION OF ALL PRODUCTS SPECIFIED IN PART 2. RISERS, DROPS AND OFFSETS REQUIRED TO AVOID INTERFERENCE WITH THE WORK OF OTHER TRADES. SOURCE(S) OF WATER SUPPLY AND DESIGN PRESSURE. PROVISION FOR FLUSHING, DRAINING AND TESTING, INCLUDING LOCATIONS AND SIZES OF DRAINS, VENTS AND FLOW TEST STATIONS. PROPOSED FLUSHING AND TESTING PROCEDURES. MAKE FULL SUBMITTALS AT ONE TIME. PARTIAL SUBMISSIONS WILL NOT BE ACCEPTED. SHOP DRAWINGS SHALL BE SUBMITTED WITH A LICENSED PROFESSIONAL ENGINEER'S STAMP. THE TRADE CONTRACTOR SHALL PREPARE LAYOUTS OF SYSTEMS, SPRINKLER HEADS, PIPING, VALVES, RISERS IN SUCH A MANNER THAT THEY MEET THE REQUIREMENTS OF LOCAL AHJ, INSURANCE UNDERWRITERS AND THE GOVERNMENT.

DESIGN: SPRINKLER SYSTEMS MUST BE HYDRAULICALLY DESIGNED IN ACCORDANCE WITH ALL NFPA 13, 70 AND 72 REQUIREMENTS AND UFC 3-600-01. SUBMIT SYSTEM DESIGN CALCULATIONS FOR REVIEW TO INSPECTING AUTHORITIES BEFORE SUBMISSION TO THE GOVERNMENT. ALL HYDRAULIC CALCULATIONS AND SHOP DRAWINGS SHALL BEAR THE SEAL OF A PROFESSIONAL ENGINEER LICENSED IN THE STATE OF DELAWARE.

WET SPRINKLER SYSTEM: EXTEND THE EXISTING WET TYPE SPRINKLER SYSTEM COMPLETE WITH NECESSARY BRANCH PIPING AND CONNECTIONS TO MAIN AND NEW SPRINKLER HEAD AS REQUIRED BY THE UNDERWRITERS. THE CONTRACTOR SHALL BE RESPONSIBLE FOR THE PROPER OPERATION OF SPRINKLER AND SUPERVISOR ALARMS.

GLYCOL SYSTEMS: ANTI-FREEZE SOLUTIONS SHALL BE PROPYLENE GLYCOL HAVING A FREEZING POINT OF 10°F OR LESS. THE CLEAN WATER SUPPLY SHALL BE PROTECTED FROM THE GLYCOL SOLUTION WITH A BACKFLOW PREVENTER, WATTS MODEL 007, OR EQUAL. THE GLYCOL PIPING SHALL INCLUDE AN EXPANSION CHAMBER AND FILL CUP OR CONNECTION.

SPRINKLER HEAD: SEE LEGEND FOR MORE INFORMATION. PROVIDE PENDENT STYLE SPRINKLER HEAD UL LISTED LIGHT HAZARD PER NFPA 13. SPRINKLER HEADS SHALL HAVE LINKS OF PROPER MELTING POINT FOR LOCATION IN WHICH INSTALLED AND SHALL BE COATED WHEN NECESSARY FOR THEIR PROPER PROTECTION AGAINST CORROSION.

PIPE AND FITTINGS: PROVIDE NECESSARY BRANCHES TO SUPPLY THE SPRINKLER. PIPING SHALL BE SECURELY SUPPORTED IN AN APPROVED MANNER AND PROPERLY GRADED TO PROVIDE FOR COMPLETE DRAINAGE IN ACCORDANCE WITH NFPA AND UFC. STEEL PIPE SHALL BE OF NATIONAL OR EQUAL GRADE. FITTINGS SHALL BE SMOOTH, CLEAN, FREE FROM DEFECTS, AND MADE OF THE BEST QUALITY GRAY CAST IRON PROPERLY TAPPED WITH FULL STANDARD THREADS. PROVIDE FIRESTOPPING IAW THE AHJ. PROVIDE HANGERS FOR PIPING IN ACCORDANCE WITH NFPA 13 AND UFC.

EXECUTION:

INSTALLATION: PIPING SHALL BE RUN WITHIN THE CEILING AND INSTALLED IN SUCH A MANNER AS TO CLEAR DUCTS, LIGHTS, PIPING AND EQUIPMENT, AND KEPT AS HIGH AS POSSIBLE. NO PIPING PERMITTED DIRECTLY UNDER LIGHT FIXTURES OR UNDER AND PARALLEL TO BUS DUCTS. DEBRIS SHALL BE REMOVED FROM THE SITE.

GUARANTEE: THE CONTRACTOR SHALL GUARANTEE ALL LABOR AND MATERIAL FOR A PERIOD OF ONE (1) YEAR FROM THE DATE OF COMPLETION AND FINAL ACCEPTANCE.

FIRE ALARM WIRE DESIGNATIONS

WIRE COLOR	CIRCUIT PURPOSE
RED (+)/BLACK (-)	SIGNALING CIRCUITS
PURPLE/WHITE	PULL STATIONS
BLUE/ORANGE	LOWER HEAT DETECTORS
BROWN/YELLOW	UPPER AND ATTIC HEAT DETECTORS
BROWN/BLUE	WATERFLOW SWITCHES
ORANGE/YELLOW	TAMPER SWITCH
BLACK/RED	SMOKE DETECTOR POWER
WHITE/YELLOW	SMOKE DETECTOR LOOP

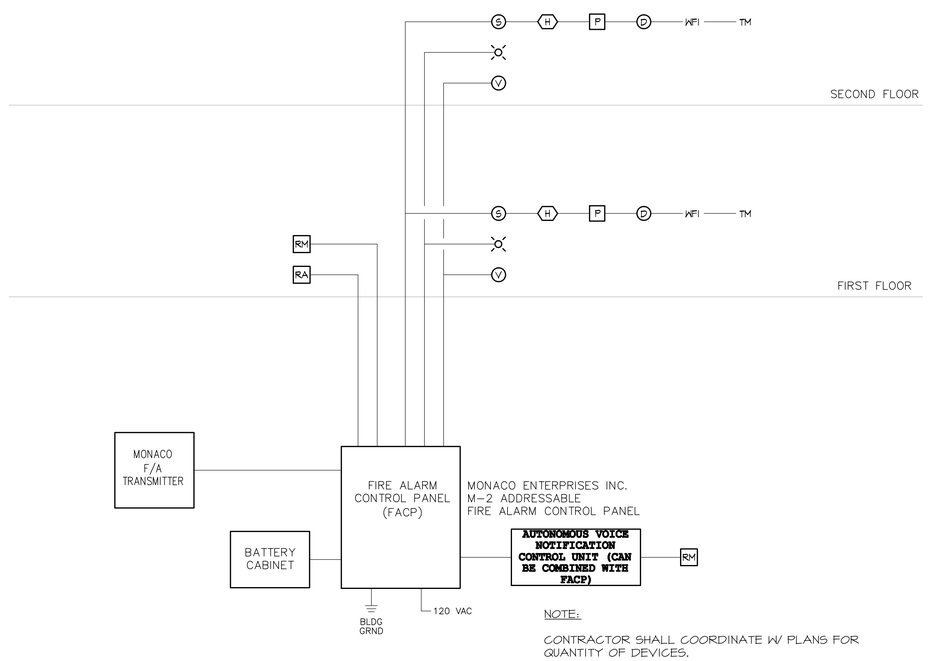

NOTE:

CONTRACTOR SHALL COORDINATE W/ PLANS FOR QUANTITY OF DEVICES.

FIRE ALARM DETECTION RISER DIAGRAM

REV	DATE	DESCRIPTION	DRAWN	APPRD
B	01JUL10	ISSUED FOR BID	SJL	CDS
A	11MAY10	ISSUED FOR REVIEW	SJL	CDS

AIR MOBILITY COMMAND
DOVER AIR FORCE BASE, DELAWARE

TITLE: REPAIR RESERVE HEADQUARTERS FACILITY 202

SUBMITTED	APPROVED	APPROVED		
CHIEF ENGINEER	CHIEF ENGINEER	COMMANDER		
DATE: 4-30-10	PROJECT #: 049002	PLOT SCALE: AS NOTED	DRAWN BY: WWR	DESIGNED BY: JRF

FIRE PROTECTION LEGEND & CONSTRUCTION NOTES

W-4497

SHT 54 OF 57

FP0

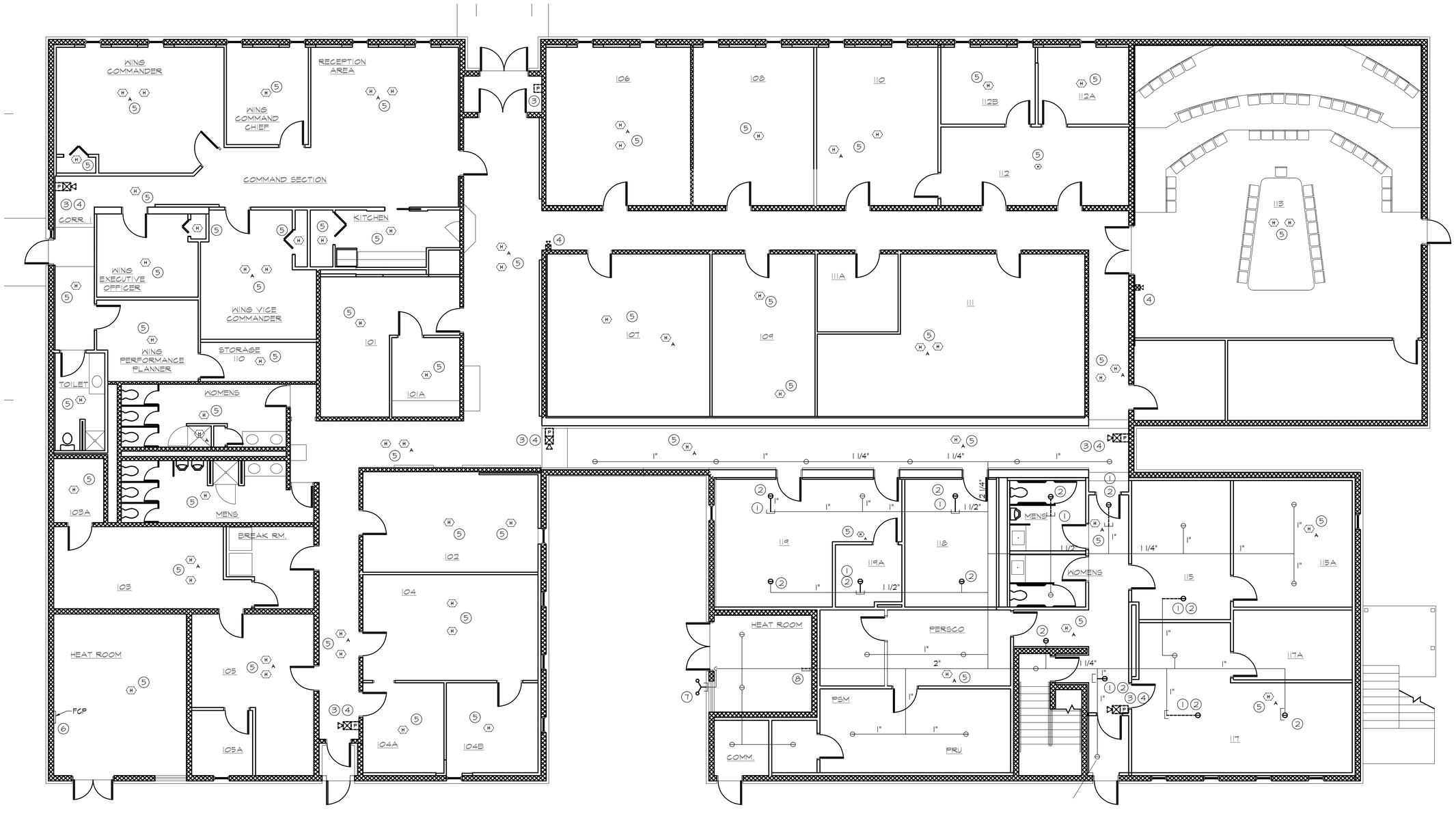

DRAWING NOTES:

1. REMOVE PIPING.
2. REMOVE SPRINKLER HEADS AND RE-USE.
3. REMOVE PULL STATION.
4. REMOVE HORN STROBE.
5. REMOVE HEAT DETECTOR(S).
6. REMOVE FIRE CONTROL PANEL.
7. REMOVE SIAMESE FIRE DEPARTMENT CONNECTION.
8. TEE INTO EXISTING PIPE.

REMOVE ALL EXISTING FIRE ALARM COMPONETS INCLUDING BUT NOT LIMITED TO EXISITNG FIRE ALARM CONTROL PANEL, DEVICES, WIRING, CONDUIT, BOXES, ETC.

PN

FIRST FLOOR DEMOLITION FIRE PROTECTION PLAN

SCALE 3/16"=1'-0"

REV	DATE	DESCRIPTION	DRAWN	APPRD
2	01JUL10	ISSUED FOR BID	SJL	CDS
1	11MAY10	ISSUED FOR REVIEW	SJL	CDS

AIR MOBILITY COMMAND
DOVER AIR FORCE BASE, DELAWARE

TITLE: REPAIR RESERVE HEADQUARTERS FACILITY 202

SUBMITTED	APPROVED	APPROVED
CHIEF ENGINEER	CHIEF ENGINEER	COMMANDER

DATE:	PROJECT #:	PLOT SCALE:	DRAWN BY:	DESIGNED BY:
4–30–10	049002	AS NOTED	WWR	JRF

FIRE PROTECTION DEMOLITION 1ST FLOOR

W–4497

SHT 55 OF 57

FPD1

PN

FIRST FLOOR FIRE PROTECTION PLAN

SCALE 3/16"=1'-0"

FIRE SUPPRESION OCCUPANCY HAZARD LEGEND:

OH ORDINARY HAZARD (.15/1500)

LH LIGHT HAZARD (.1/1500)

REV	DATE	DESCRIPTION	DRAWN	APPRD
B	01JUL10	ISSUED FOR BID	SJL	CDS
A	11MAY10	ISSUED FOR REVIEW	SJL	CDS

AIR MOBILITY COMMAND
DOVER AIR FORCE BASE, DELAWARE

TITLE: REPAIR RESERVE HEADQUARTERS FACILITY 202

SUBMITTED	APPROVED	APPROVED
CHIEF ENGINEER	CHIEF ENGINEER	COMMANDER

DATE:	PROJECT #:	PLOT SCALE:	DRAWN BY:	DESIGNED BY:
4-30-10	049002	AS NOTED	WWR	JRF

FIRE PROTECTION PLANS-1ST FLOOR

W-4497

SHT 56 OF 57

FP1

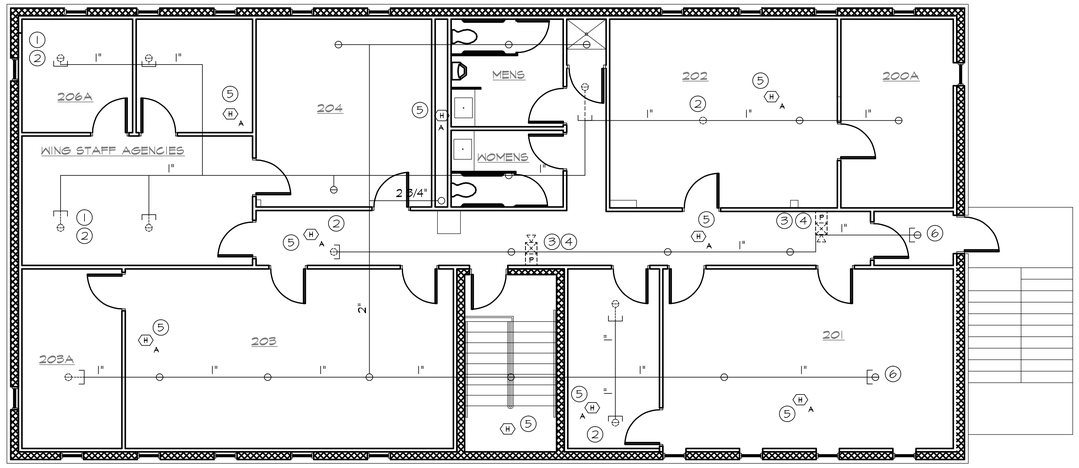

PN

SECOND FLOOR DEMOLITION FIRE PROTECTION PLAN

SCALE 3/16"=1'-0"

DRAWING NOTES:

1. REMOVE PIPING.
2. REMOVE SPRINKLER HEADS AND RE-USE.
3. REMOVE PULL STATION.
4. REMOVE HORN STROBE.
5. REMOVE HEAT DETECTOR(S).
6. TEE INTO EXISTING LINE.

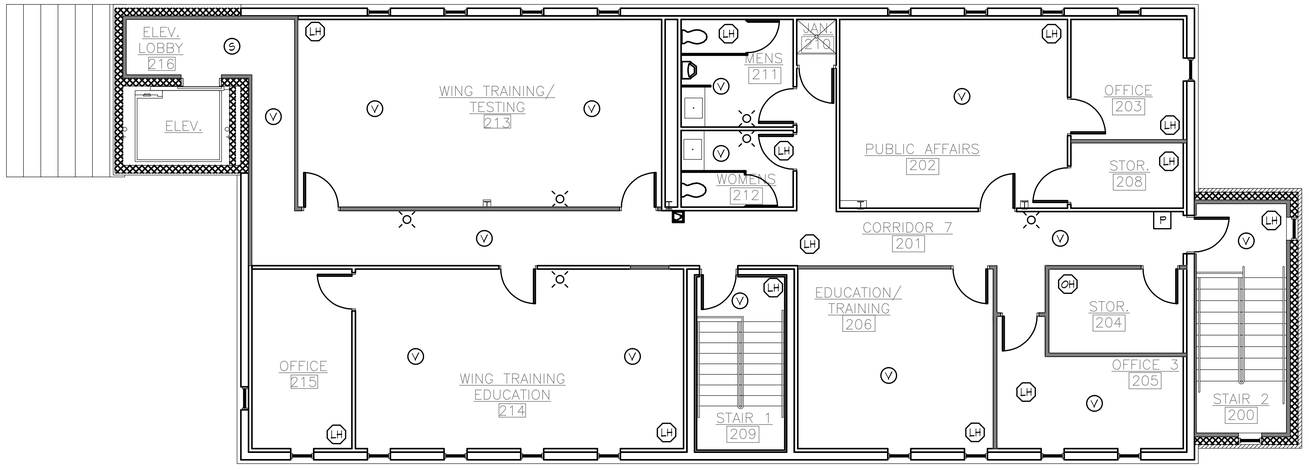

PN

SECOND FLOOR FIRE PROTECTION PLAN

SCALE 3/16"=1'-0"

FIRE SUPPRESION OCCUPANCY HAZARD LEGEND:

- OH ORDINARY HAZARD (.15/1500)
- LH LIGHT HAZARD (.1/1500)

REV	DATE	DESCRIPTION	DRAWN	APPRD
B	01JUL10	ISSUED FOR BID	SJL	CDS
A	11MAY10	ISSUED FOR REVIEW	SJL	CDS

AIR MOBILITY COMMAND
DOVER AIR FORCE BASE, DELAWARE

TITLE: REPAIR RESERVE HEADQUARTERS FACILITY 202

SUBMITTED	APPROVED	APPROVED
CHIEF ENGINEER	CHIEF ENGINEER	COMMANDER

DATE:	PROJECT #:	PLOT SCALE:	DRAWN BY:	DESIGNED BY:
4-30-10	049002	AS NOTED	WWR	JRF

FIRE PROTECTION DEMO & NEW WORK 2ND FLOOR

W-4497

SHT 57 OF 57

FP2