United States Department of Agriculture
Forest Service

MONTANA
HELENA-LEWIS AND CLARK NATIONAL FOREST
ROCKY MOUNTAIN RANGER DISTRICT
JUDITH MUSSELSHELL RANGER DISTRICT
HELENA RANGER DISTRICT

CONCRETE VAULT TOILET INSTALLATIONS

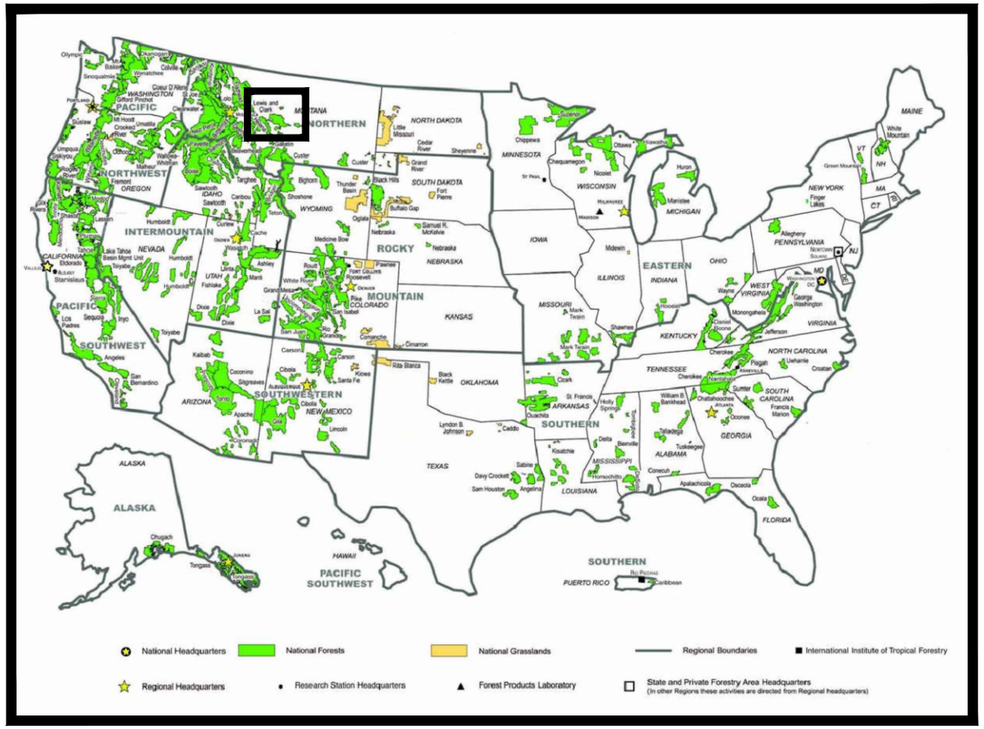

FOREST LOCATION MAP

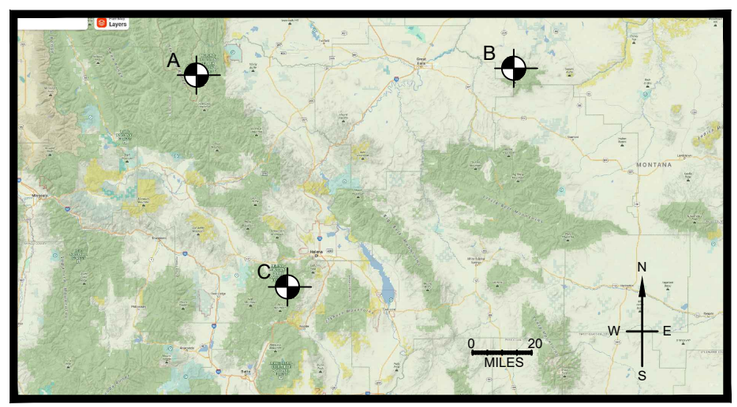

PROJECT LOCATION MAP

TOILET LOCATIONS:

A. Rocky Mountain Ranger District:	**Coordinates:**	**Installation:**
• Benchmark Airstrip Toilet	47.47625, -112.86746	Replacement
• Ron Janicula Trailhead Toilet	47.47409, -112.86404	Replacement
B. Judith Musshelshell Ranger District:	**Coordinates:**	**Installation:**
• Highwood Cabin Toilet	47.47834, -110.61072	New
C. Helena Ranger District:	**Coordinates:**	**Installation:**
• Park Lake Day Use Toilet	46.44381, -112.16928	Replacement
• Park Lake Campground Toilet	46.44352, -112.16771	Replacement

INDEX OF SHEETS

SHEET	SHEET TITLE	DATE
01	COVERSHEET	5/14/2026
2	QUANTITIES AND GENERAL NOTES	05/14/26
3	PROJECT MAP	05/14/26
4	SITE MAP- RMRD	5/14/2026
5	SITE MAP - JMRD	05/14/26
6	SITE MAP - HRD	05/14/26
7	TYPICAL DETAILS	05/14/26
8	PARK LAKE DETAILS	05/14/26

RECOMMENDED BY:

JEROME GANNON — Digitally signed by JEROME GANNON Date: 2026.05.15 10:23:00 -06'00'
FOREST ENGINEER

IVY BAKER — Digitally signed by IVY BAKER Date: 2026.05.15 16:14:31 -06'00'
RMRD DISTRICT RANGER

JASON OLTROGGE — Digitally signed by JASON OLTROGGE Date: 2026.05.15 07:41:55 -06'00'
JMRD DISTRICT RANGER

KATHERINE BUSHNELL — Digitally signed by KATHERINE BUSHNELL Date: 2026.05.15 10:53:33 -06'00'
HRD DISTRICT RANGER

APPROVED BY:

MOLLY RYAN — Digitally signed by MOLLY RYAN Date: 2026.05.15 16:36:27 -06'00'
FOREST SUPERVISOR

5/14/26 14:44 NZUCKER C:\USERS\NZUCKER\BOX\R01 HLF 7000 ENGINEERING\HLF 7300 BUILDINGS AND OTHER STRUCTURES\PROJECTS\06_JMRD\HIGHWOOD CABIN SST\DRAWINGS\HIGHWOOD CABIN SST.DWG;

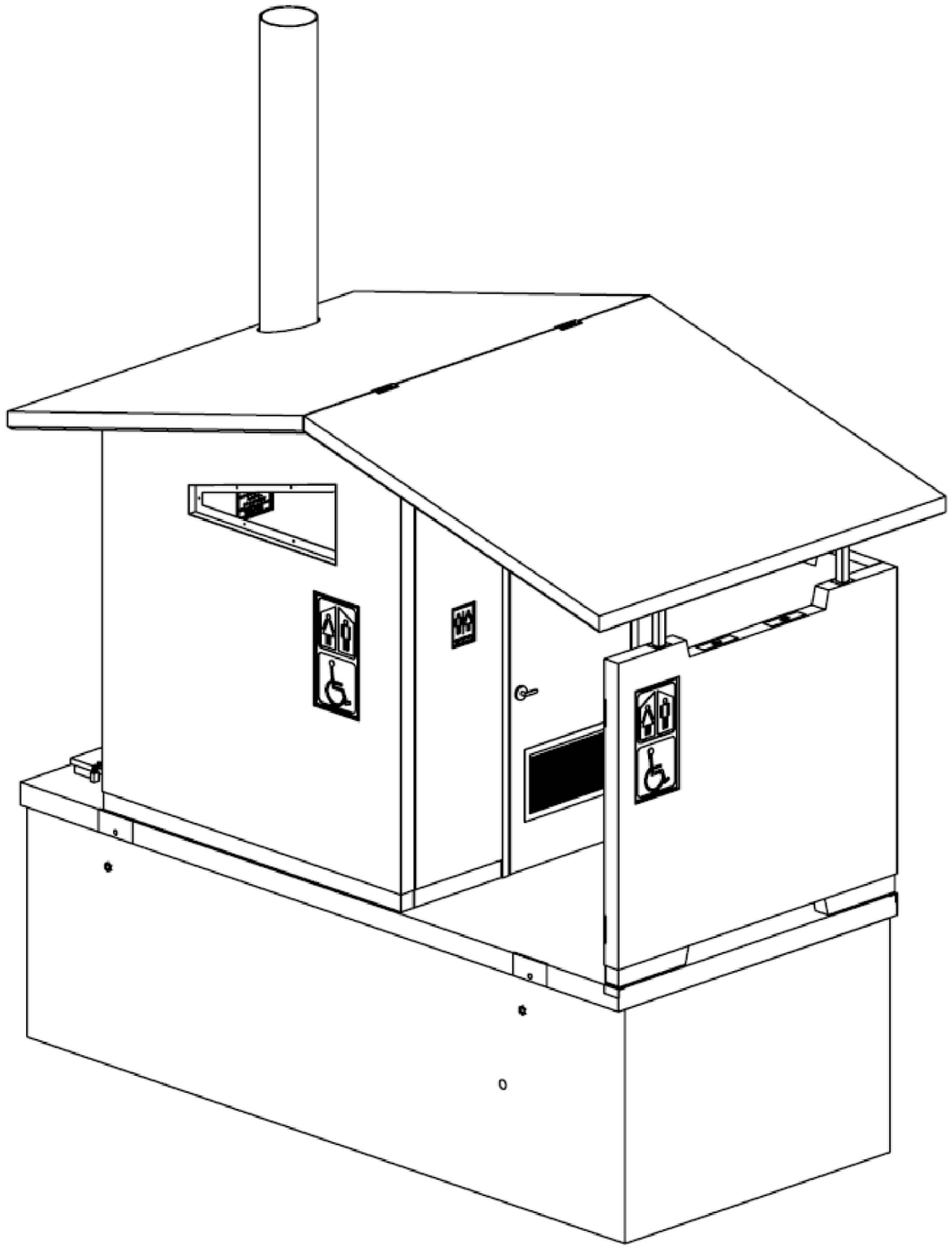

IMAGE OF RIGHT HANDED VAULT TOILET

SCHEDULE OF ITEMS

ROCKY MOUNTAIN RANGER DISTRICT

Pay Item	Item Description	Type	Estimated Quantity	Pay Unit
1	Benchmark Airstrip Toilet Replacement	Right	1	Lump Sum
2	Ron Janicula Trailhead Toilet Replacement	Right	1	Lump Sum

JUDITH MUSSELSHELL RANGER DISTRICT

Pay Item	Item Description	Type	Estimated Quantity	Pay Unit
3	Highwood Cabin Toilet New Installation	Right	1	Lump Sum

HELENA RANGER DISTRICT

Pay Item	Item Description	Type	Estimated Quantity	Pay Unit
4	Park Lake Day Use Replacement	Left	1	Lump Sum
5	Park Lake Campground North Replacement	Left	1	Lump Sum
6	Park Lake Concrete Paving Replace Asphalt		1	Lump Sum

GENERAL NOTES:

1. **NEW INSTALLATION:** TOILET AND MATERIAL SUPPLY, DELIVERY, EXCAVATION, AND ALL OTHER WORK REQUIRED FOR A COMPLETE INSTALLATION OF A NEW CONCRETE VAULT TOILET SYSTEM.
2. **REPLACEMENT:** ALL WORK REQUIRED FOR A NEW INSTALLATION BUT WITH THE ADDITION OF PUMPING, DEMOLITION, AND DISPOSAL OF AN EXISTING TOILET.
3. HIGHWOOD CABIN TOILET REQUIRES A WATER FORD CROSSING TO ACCESS THE SITE. SEE SHEET 05 FOR MORE DETAILS.
4. BOTH PARK LAKE TOILETS REQUIRE DEMOLITION OF ASPHALT PAVING SURFACE AND REPLACEMENT WITH CONCRETE PAVING SEE SHEET 08 FOR MORE DETAILS.

CONCRETE VAULT TOILET BASIS:

a. TYPE: SINGLE VAULT TOILET
b. EXTERIOR: BARNWOOD LOOK
c. SCREEN: FULL SCREEN
d. ROOF: SIMULATED WOOD SHAKE ROOF
e. COLOR: DARK BROWN CONCRETE
f. SIGNAGE: UNISEX - ADA
g. VENT SCREEN: REQUIRED - INSTALLED OVER VENT
h. FLOOR PLANS: RIGHT (X3), LEFT (X2)

ACCEPTED MANUFACTURES AND MODELS
(OR APPROVED EQUAL):

- MISSOULA CONCRETE - ASPEN
- CXT - GUNNISON

GENERAL NOTES:

- INSTALLATION SHALL COMPLY WITH CONTRACT SPECIFICATIONS AND TOILET MANUFACTURER'S INSTALLATION INSTRUCTIONS.
- CONTRACTOR RESPONSIBLE FOR UTILITY LOCATES PRIOR TO EXCAVATION.
- CONTRACTOR SHALL PROVIDE EXCAVATION AND EARTHWORK NECESSARY TO INSTALL CONCRETE VAULT TOILET IN CONFORMANCE TO CONTRACT SPECIFICATIONS AND TOILET MANUFACTURER'S INSTALLATION INSTRUCTIONS.
- CONTRACTOR SHALL PROCURE, DELIVER, AND INSTALL CONCRETE VAULT TOILET.
- COMPACTION OF BEDDING AND BACKFILL SHALL BE COMPLETED IN SIX (6)) INCH COMPACTED LIFTS WITH A MINIMUM OF TWO (2) PASSES WITH A WHACKER-TYPE MECHANICAL COMPACTOR OR APPROVED EQUIVALENT.
- FINISH GRADES SHALL PROVIDE POSITIVE DRAINAGE AWAY FROM FOUNDATION WALLS. GRADE SHALL FALL A MINIMUM OF 6 INCHES WITHIN THE FIRST 10 FEET ON ALL SIDES OF THE TOILET STRUCTURE.
- BEFORE FINAL ACCEPTANCE, CONTRACTOR SHALL PROVIDE FINISH GRADING AND SITE CLEANUP.

United States Department of Agriculture
Forest Service

(R1)
NORTHERN REGION

STAMPS, LOGOS, AND SEALS

NO.	REVISION / ISSUE	DATE
4		
3		
2		
1		

PROJECT NAME

CONCRETE VAULT TOILET INSTALLATIONS

HELENA-LEWIS AND CLARK NATIONAL FOREST

FOREST WIDE

DRAWING TITLE

QUANTITIES AND GENERAL NOTES

DATE 05/01/2026	ARCHIVE NO.
DESIGNER R. STOVALL	DRAWING SHEET NO. 2
DRAWN R. STOVALL	
CHECKED J. GANNON	
PROJECT NO.	SHEET 2 OF 8

5/14/26 14:44 NZUCKER C:\USERS\NZUCKER\BOXR\01 HLF 7000 ENGINEERING\HLF 7300 BUILDINGS AND OTHER STRUCTURES\PROJECTS\06_JNRD\HIGHWOOD CABIN SST\DRAWINGS\HIGHWOOD CABIN SST.DWG;

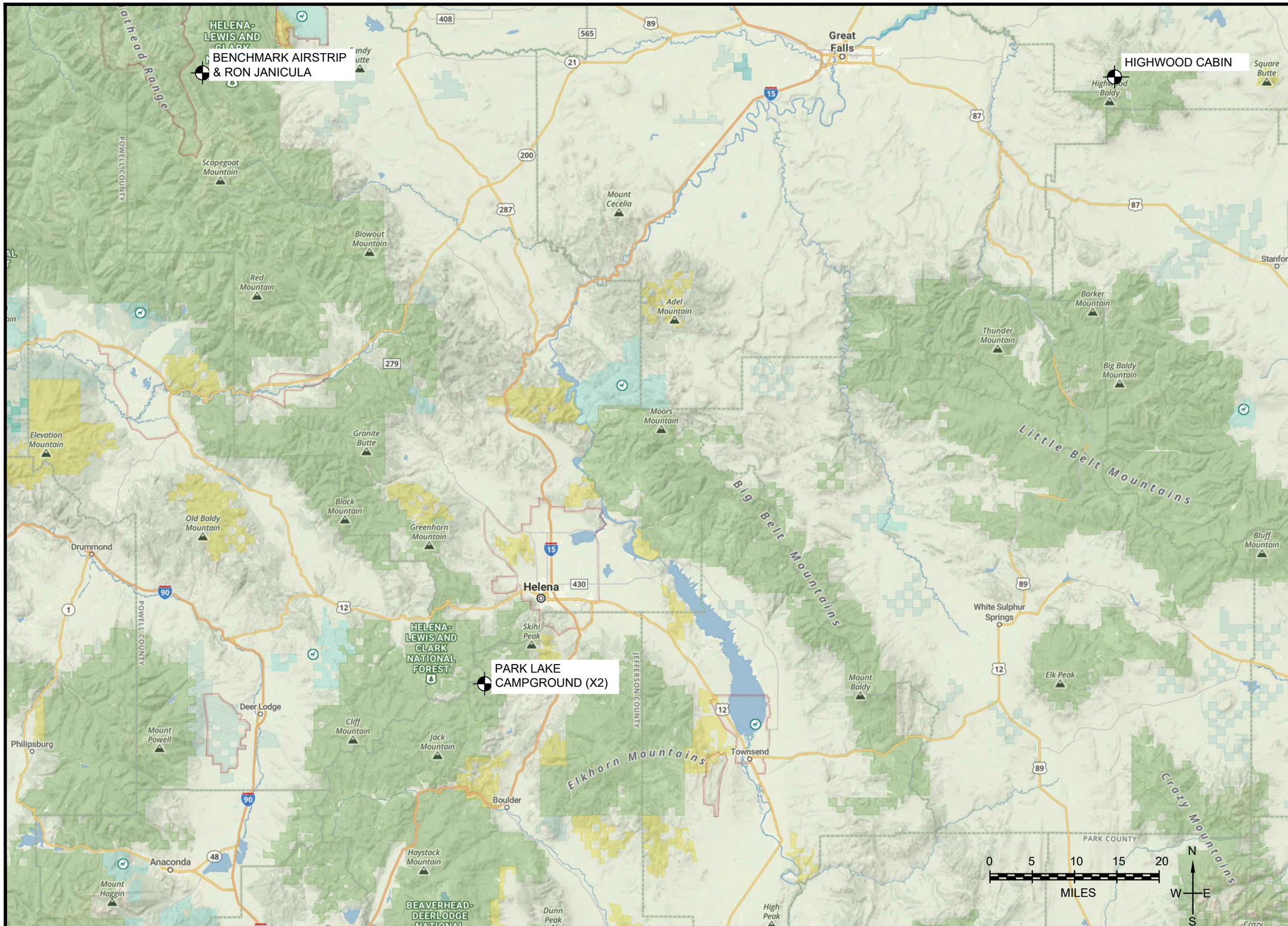

USDA

United States Department of Agriculture
Forest Service

NORTHERN REGION

STAMPS, LOGOS, AND SEALS

NO.	REVISION / ISSUE	DATE
4		
3		
2		
1		

PROJECT NAME

CONCRETE VAULT TOILET INSTALLATIONS

HELENA-LEWIS AND CLARK NATIONAL FOREST

FOREST WIDE

DRAWING TITLE

PROJECT MAP

DATE 05/01/2026	ARCHIVE NO.
DESIGNER R. STOVALL	DRAWING SHEET NO. 3
DRAWN R. STOVALL	
CHECKED J. GANNON	
PROJECT NO.	SHEET 3 OF 8

5/14/26 14:44 NZUCKER C:\USERS\NZUCKER\BOX\R01 HLF 7000 ENGINEERING\HLF 7300 BUILDINGS AND OTHER STRUCTURES\PROJECTS\06_JMRD\HIGHWOOD CABIN SST\DRAWINGS\HIGHWOOD CABIN SST.DWG;

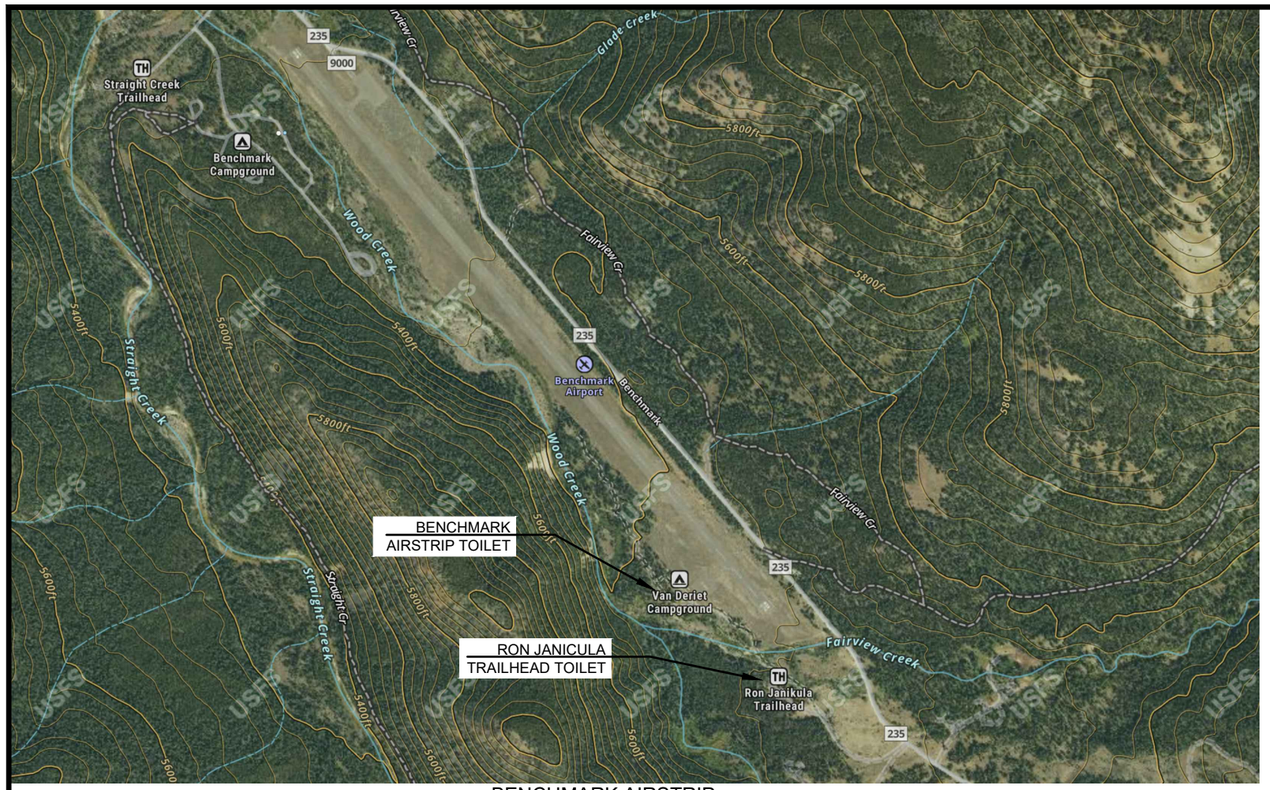

BENCHMARK AIRSTRIP

Rocky Mountain Ranger District:	Coordinates:	Installation:
• Benchmark Airstrip Toilet	47.47625, -112.86746	Replacement
• Ron Janicula Trailhead Toilet	47.47409, -112.86404	Replacement

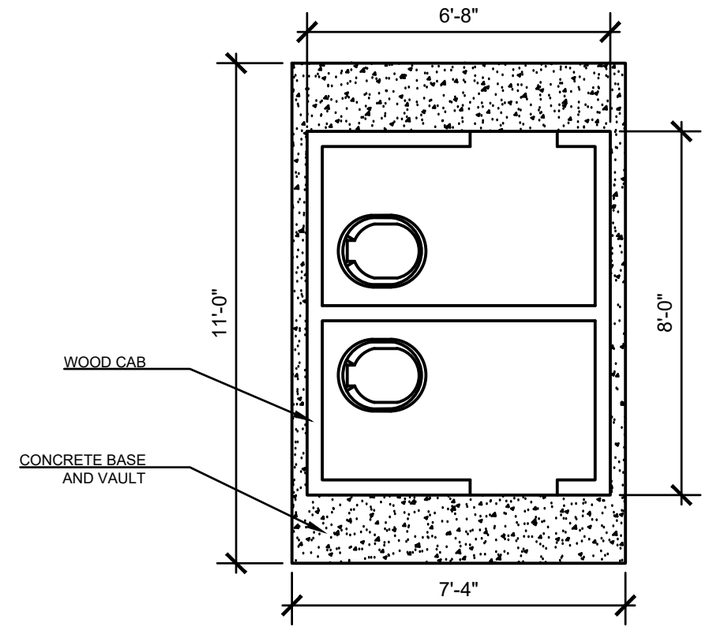

RMRD EXISTING TOILET DIMENSIONS

BENCHMARK AIRSTRIP TOILET

RON JANICULA TOILET

USDA FOREST SERVICE

United States Department of Agriculture
Forest Service

(R1)
NORTHERN REGION

STAMPS, LOGOS, AND SEALS

NO.	REVISION / ISSUE	DATE
4		
3		
2		
1		

PROJECT NAME

CONCRETE VAULT TOILET INSTALLATIONS

HELENA-LEWIS AND CLARK NATIONAL FOREST

FOREST WIDE

DRAWING TITLE

SITE MAP RMRD

DATE 05/01/2026	ARCHIVE NO.
DESIGNER R. STOVALL	DRAWING SHEET NO. 4
DRAWN R. STOVALL	
CHECKED J. GANNON	
PROJECT NO.	SHEET 4 OF 8

5/14/26 14:44 NZUCKER C:\USERS\NZUCKER\BOX\R01 HLF 7000 ENGINEERING\HLF 7300 BUILDINGS AND OTHER STRUCTURES\PROJECTS\06_IMRD\HIGHWOOD CABIN SST\DRAWINGS\HIGHWOOD CABIN SST.DWG;

HIGHWOOD CABIN SITE

Judith Musshelshell Ranger District:	Coordinates:	Installation:
• Highwood Cabin Toilet	47.47834, -110.61072	New

GENERAL NOTES:

1. NEW SITE TO BE STAKED AND/OR APPROVED BY COR PRIOR TO INSTALLATION.
2. WATER FORD CROSSING REQUIRED TO ENTER SITE.

FORD CROSSING TO ENTER SITE (PHOTO 4/29/26)

HIGHWOOD CABIN

United States Department of Agriculture
Forest Service

(R1)
NORTHERN REGION

STAMPS, LOGOS, AND SEALS

NO.	REVISION / ISSUE	DATE
4		
3		
2		
1		

PROJECT NAME

CONCRETE VAULT TOILET INSTALLATIONS

HELENA-LEWIS AND CLARK NATIONAL FOREST

FOREST WIDE

DRAWING TITLE

SITE MAP JMRD

DATE 05/01/2026	ARCHIVE NO.
DESIGNER R. STOVALL	DRAWING SHEET NO. 5
DRAWN R. STOVALL	
CHECKED J. GANNON	
PROJECT NO.	SHEET 5 OF 8

5/14/26 14:44 NZLICKER C:\USERS\NZLICKER\BOX\R01 HLF 7000 ENGINEERING\HLF 7300 BUILDINGS AND OTHER STRUCTURES\PROJECTS\06_JMRD\HIGHWOOD CABIN SST\DRAWINGS\HIGHWOOD CABIN SST.DWG;

PARK LAKE DAY USE AND CAMPGROUND

Helena Ranger District:	Coordinates:	Installation:
• Park Lake Day Use Toilet	46.44381, -112.16928	Replacement
• Park Lake Campground Toilet	46.44352, -112.16771	Replacement

GENERAL NOTES:

1. CONTRACTOR RESPONSIBLE FOR THE DEMOLITION OF ASPHALT PAVING SURFACE AND REPLACEMENT WITH CONCRETE PAVING.
2. SEE SHEET 08 FOR DETAILS.

PARK LAKE DAY USE TOILET

PARK LAKE CAMPGROUND TOILET

United States Department of Agriculture
Forest Service

(R1)
NORTHERN REGION

STAMPS, LOGOS, AND SEALS

NO.	REVISION / ISSUE	DATE
4		
3		
2		
1		

PROJECT NAME

CONCRETE VAULT TOILET INSTALLATIONS

HELENA-LEWIS AND CLARK NATIONAL FOREST

FOREST WIDE

DRAWING TITLE

SITE MAP HRD

DATE 05/01/2026	ARCHIVE NO.
DESIGNER R. STOVALL	DRAWING SHEET NO. 6
DRAWN R. STOVALL	
CHECKED J. GANNON	
PROJECT NO.	SHEET 6 OF 8

5/14/26 14:44 NZLICKER C:\USERS\NZLICKER\BOX\R01 HLF 7000 ENGINEERING\HLF 7300 BUILDINGS AND OTHER STRUCTURES\PROJECTS\06_JMRD\HIGHWOOD CABIN SST\DRAWINGS\HIGHWOOD CABIN SST.DWG;

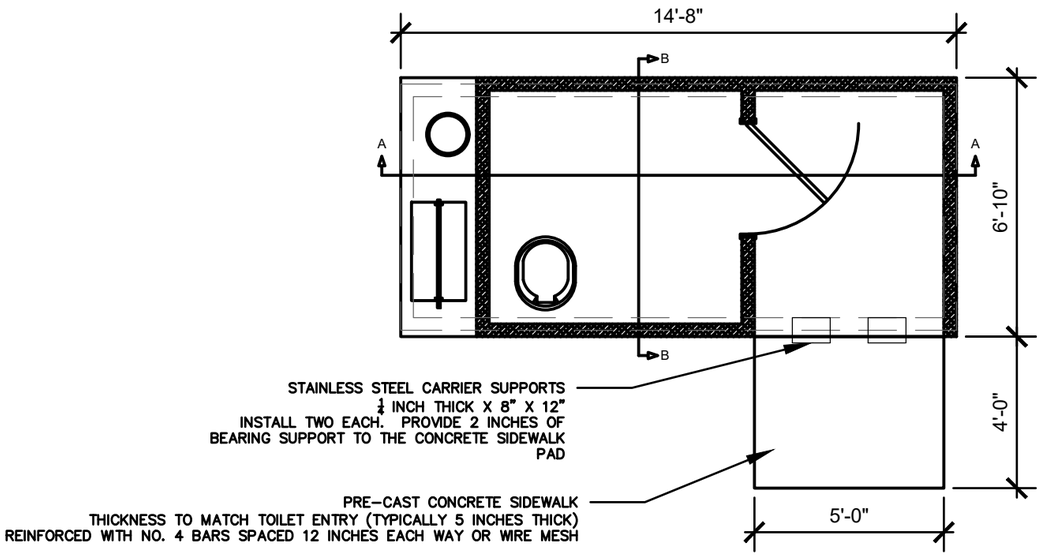

1 **PLAN VIEW (RIGHT)**

SCALE: NTS

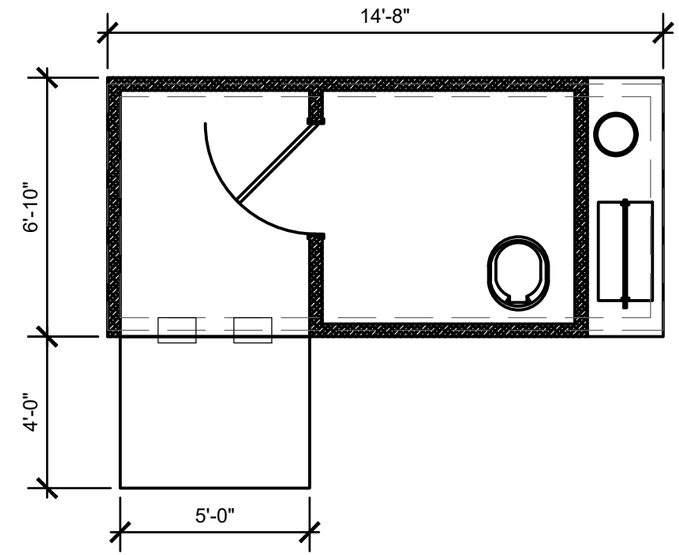

2 **PLAN VIEW (LEFT)**

SCALE: NTS

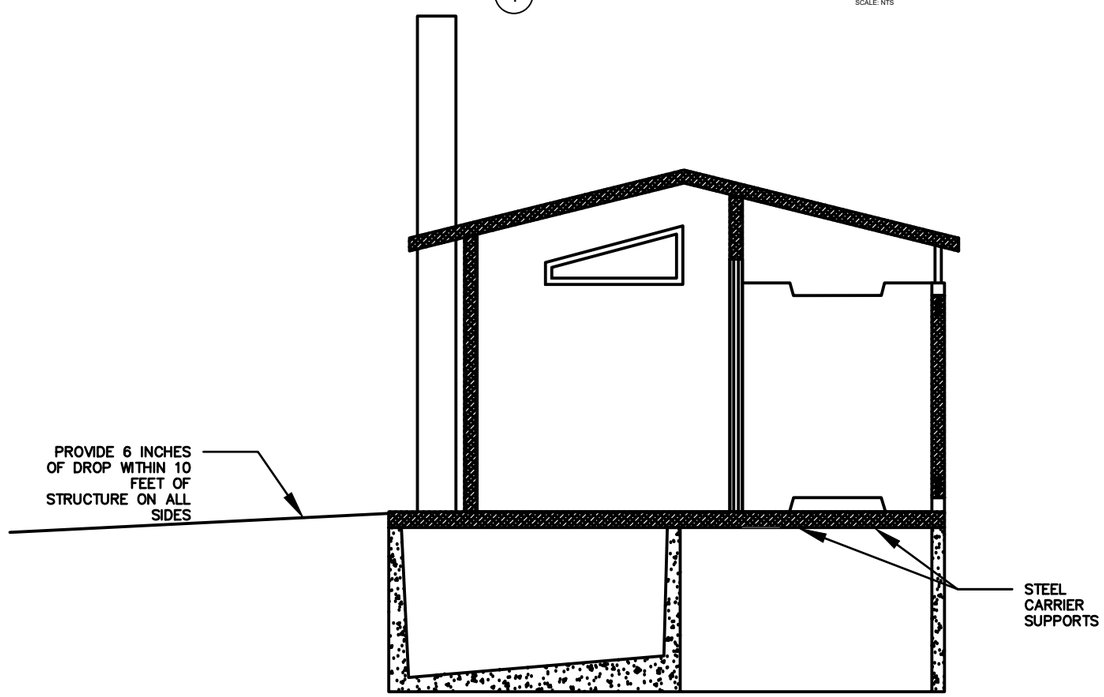

3 **TYPICAL SECTION AA**

SCALE: NTS

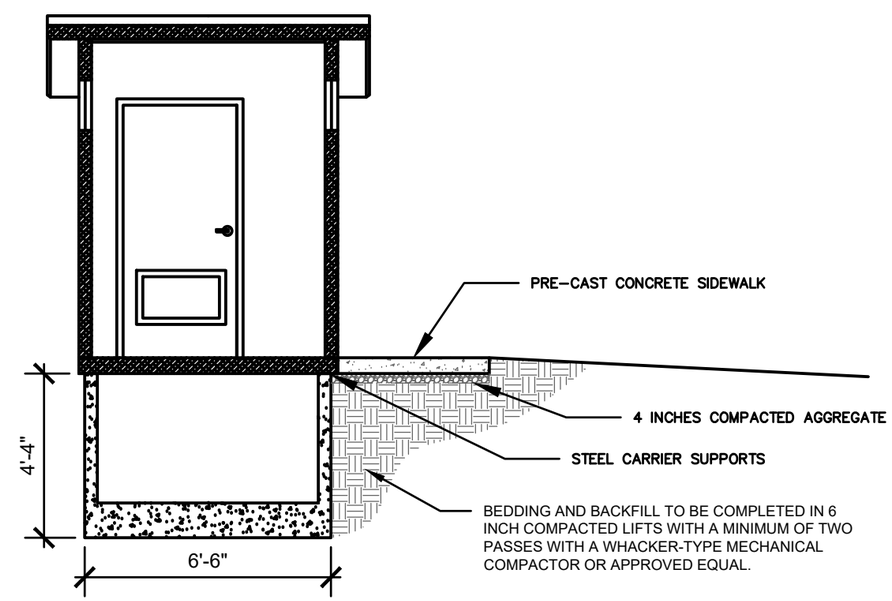

4 **TYPICAL SECTION BB**

SCALE: NTS

*DIMENSIONS ARE PROVIDED FOR ESTIMATING PURPOSES ONLY.

5/14/26 14:44 NZLUCKER C:\USERS\NZLUCKER\BOX\R01 HLF 7000 ENGINEERING\HLF 7300 BUILDINGS AND OTHER STRUCTURES\PROJECTS\06_JMRD\HIGHWOOD CABIN SST\DRAWINGS\HIGHWOOD CABIN SST.DWG;

United States Department of Agriculture
Forest Service

(R1)
NORTHERN REGION

STAMPS, LOGOS, AND SEALS

NO.	REVISION / ISSUE	DATE
4		
3		
2		
1		

PROJECT NAME

CONCRETE VAULT TOILET INSTALLATIONS

HELENA-LEWIS AND CLARK NATIONAL FOREST

FOREST WIDE

DRAWING TITLE

TOILET TYPICAL DETAILS

DATE 05/01/2026	ARCHIVE NO.
DESIGNER R. STOVALL	DRAWING SHEET NO. 7
DRAWN R. STOVALL	
CHECKED J. GANNON	
PROJECT NO.	SHEET 7 OF 8

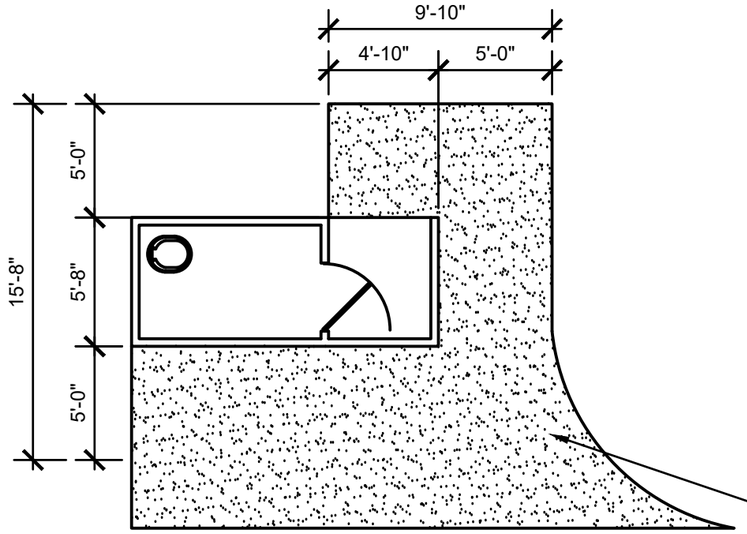

1 **PARK LAKE DAY USE (EXISTING)**

SCALE: NTS

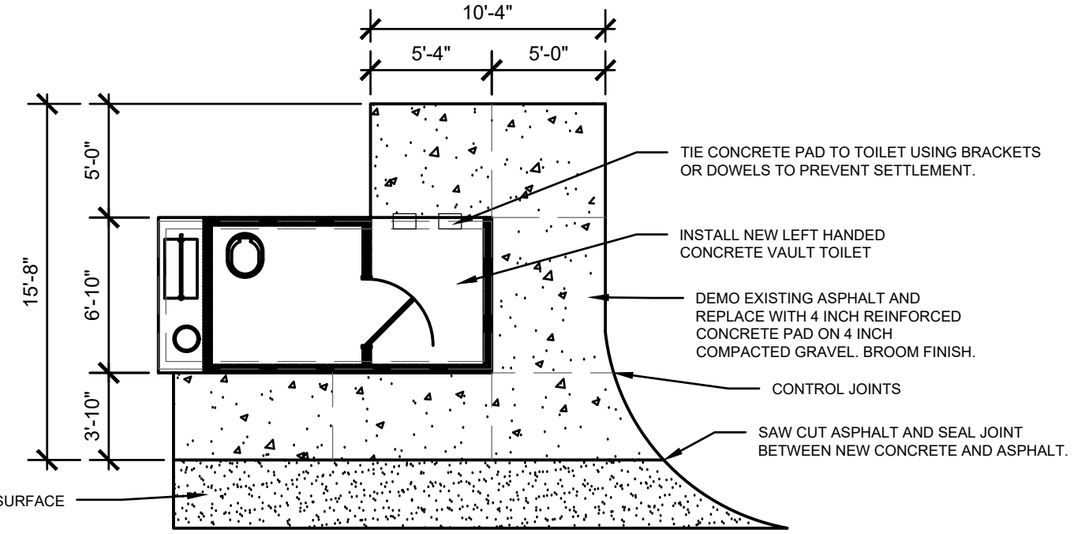

2 **PARK LAKE DAY USE (PROPOSED)**

SCALE: NTS

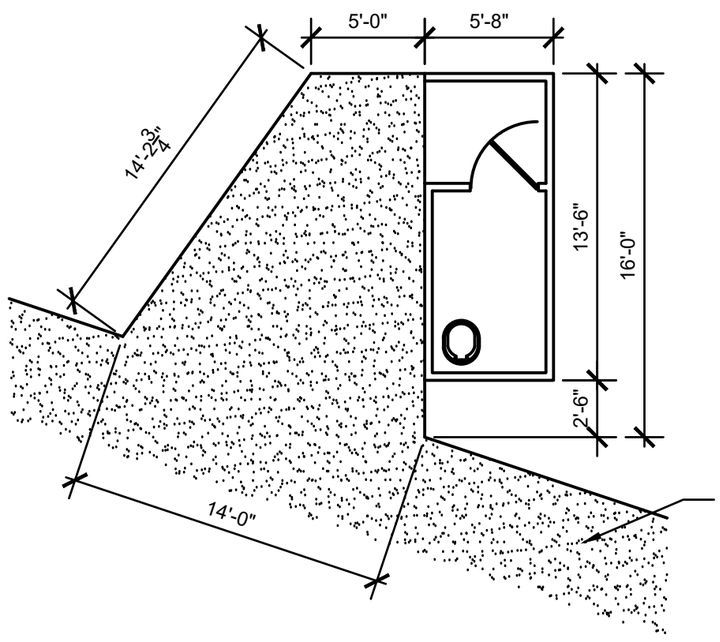

3 **PARK LAKE CG (EXISTING)**

SCALE: NTS

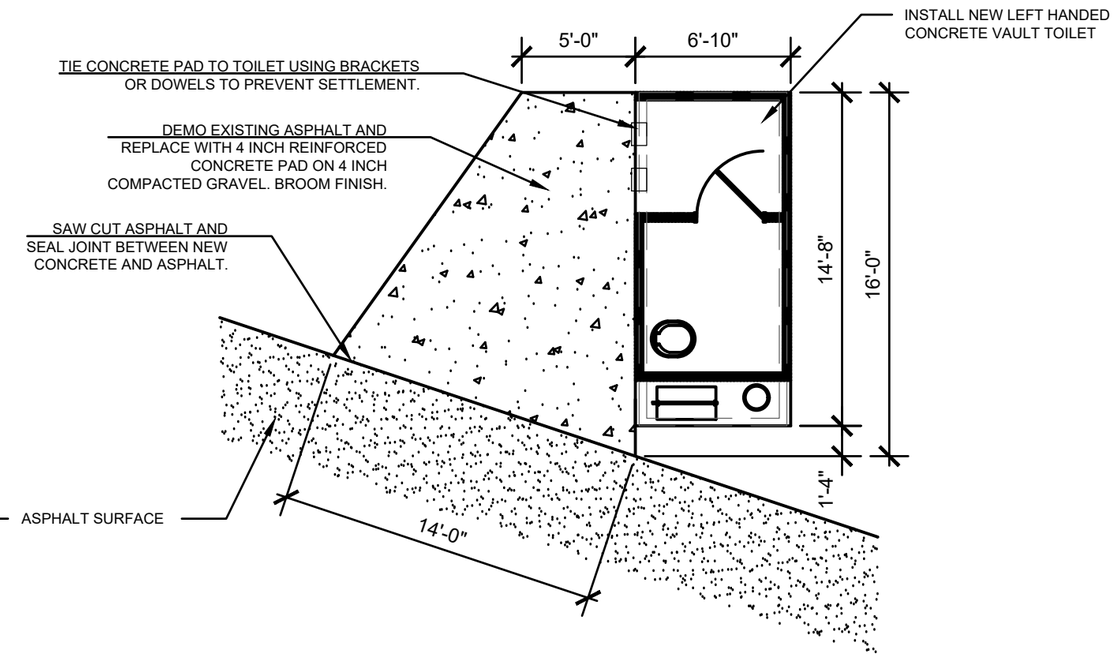

4 **PARK LAKE CG (PROPOSED)**

SCALE: NTS

*DIMENSIONS ARE PROVIDED FOR ESTIMATING PURPOSES ONLY.
CONTRACTOR SHALL FIELD VERIFY PRIOR TO BIDDING OR ORDERING MATERIALS.

United States Department of Agriculture
Forest Service

(R1)
NORTHERN REGION

STAMPS, LOGOS, AND SEALS

NO.	REVISION / ISSUE	DATE
4		
3		
2		
1		

PROJECT NAME

CONCRETE VAULT TOILET INSTALLATIONS

HELENA-LEWIS AND CLARK NATIONAL FOREST

FOREST WIDE

DRAWING TITLE

PARK LAKE DETAILS

DATE 05/01/2026	ARCHIVE NO.
DESIGNER R. STOVALL	DRAWING SHEET NO. 8
DRAWN R. STOVALL	
CHECKED J. GANNON	
PROJECT NO.	SHEET 8 OF 8

5/14/26 14:44 NZUCKER C:\USERS\NZUCKER\BOX\R01 1\LF 7000 ENGINEERING\LF 7300 BUILDINGS AND OTHER STRUCTURES\PROJECTS\96_IMRD\HIGHWOOD CABIN SST\DRAWINGS\HIGHWOOD CABIN SST.DWG;