SOLICITATION/CONTRACT/ORDER FOR COMMERCIAL ITEMS

OFFEROR TO COMPLETE BLOCKS 12, 17, 23, 24, & 30

1. REQUISITION NUMBER: 1173786

PAGE 1 OF 2

2. CONTRACT NO.

3. AWARD/ EFFECTIVE DATE

4. ORDER NUMBER

5. SOLICITATION NUMBER: 12444026Q0127

6. SOLICITATION ISSUE DATE: 07/01/2026

7. FOR SOLICITATION INFORMATION CALL:

a. NAME: RICHARD KANDRACH

b. TELEPHONE NUMBER (No collect calls): (928)913-9283

8. OFFER DUE DATE/LOCAL TIME: 07/16/2026 0900 ET

9. ISSUED BY CODE 4440

USDA-FS CSA EAST 2
1720 PEACHTREE ST NW
STE 876S
ATLANTA GA 30309-2449

10. THIS ACQUISITION IS ☐ UNRESTRICTED OR ☒ SET ASIDE: 100.00 % FOR:

☒ SMALL BUSINESS
☐ HUBZONE SMALL BUSINESS
☐ SERVICE-DISABLED VETERAN-OWNED SMALL BUSINESS (SDVOSB)
☐ WOMEN-OWNED SMALL BUSINESS (WOSB)
☐ ECONOMICALLY DISADVANTAGED WOMEN-OWNED SMALL BUSINESS (EDWOSB)
☐ 8(A)

NORTH AMERICAN INDUSTRY CLASSIFICATION STANDARD (NAICS): 333112

SIZE STANDARD: 1,500

11. DELIVERY FOR FREE ON BOARD (FOB) DESTINATION UNLESS BLOCK IS MARKED
☒ SEE SCHEDULE

12. DISCOUNT TERMS

13a. THIS CONTRACT IS A RATED ORDER UNDER THE DEFENSE PRIORITIES AND ALLOCATIONS SYSTEM - DPAS (15 CFR 700) ☐

13b. RATING

14. METHOD OF SOLICITATION
☒ REQUEST FOR QUOTE (RFQ) ☐ INVITATION FOR BID (IFB) ☐ REQUEST FOR PROPOSAL (RFP)

15. DELIVER TO CODE

USDA FOREST SERVICE
BLAIRSVILLE RANGER DISTRICT
2042 GA-515
BLAIRSVILLE GA 30512

16. ADMINISTERED BY CODE 4440

USDA-FS CSA EAST 2
1720 PEACHTREE ST NW
STE 876S
ATLANTA GA 30309-2449

17a. CONTRACTOR/ OFFEROR CODE

FACILITY CODE

TELEPHONE NO.

☐ 17b. CHECK IF REMITTANCE IS DIFFERENT AND PUT SUCH ADDRESS IN OFFER

18a. PAYMENT WILL BE MADE BY CODE

18b. SUBMIT INVOICES TO ADDRESS SHOWN IN BLOCK 18a UNLESS BLOCK BELOW IS CHECKED ☐ SEE ADDENDUM

19. ITEM NO.	20. SCHEDULE OF SUPPLIES/SERVICES	21. QUANTITY	22. UNIT	23. UNIT PRICE	24. AMOUNT
	Equipment Attachments Purchase for the Blue Ridge Ranger District, GA Delivery: 09/15/2026 Period of Performance: 09/15/2026 to 09/30/2026				
0001	Equipment Attachments Purchase for the Blue Ridge Ranger District, GA Points of Contact Tech POC / Contracting Officer Representative: jonathan.key@usda.gov 706-745-6928	1	EA		

(Use Reverse and/or Attach Additional Sheets as Necessary)

25. ACCOUNTING AND APPROPRIATION DATA

26. TOTAL AWARD AMOUNT *(For Government Use Only)*

☒ 27a. SOLICITATION INCORPORATES BY REFERENCE (FEDERAL ACQUISITION REGULATION) FAR 52.212-1, 52.212-4. FAR 52.212-3 AND 52.212-5 ARE ATTACHED. ADDENDA ☒ ARE ☐ ARE NOT ATTACHED.

☐ 27b. CONTRACT/PURCHASE ORDER INCORPORATES BY REFERENCE FAR 52.212-4. FAR 52.212-5 IS ATTACHED. ADDENDA ☐ ARE ☐ ARE NOT ATTACHED.

☒ 28. CONTRACTOR IS REQUIRED TO SIGN THIS DOCUMENT AND RETURN 1 COPIES TO ISSUING OFFICE. CONTRACTOR AGREES TO FURNISH AND DELIVER ALL ITEMS SET FORTH OR OTHERWISE IDENTIFIED ABOVE AND ON ANY ADDITIONAL SHEETS SUBJECT TO THE TERMS AND CONDITIONS SPECIFIED.

☐ 29. AWARD OF CONTRACT: REFERENCE _____ OFFER DATED _____. YOUR OFFER ON SOLICITATION (BLOCK 5), INCLUDING ANY ADDITIONS OR CHANGES WHICH ARE SET FORTH HEREIN, IS ACCEPTED AS TO ITEMS:

30a. SIGNATURE OF OFFEROR/CONTRACTOR

31a. UNITED STATES OF AMERICA *(SIGNATURE OF CONTRACTING OFFICER)*

30b. NAME AND TITLE OF SIGNER *(Type or print)*

30c. DATE SIGNED

31b. NAME OF CONTRACTING OFFICER *(Type or print)*: STEPHANIE LARUFFA

31c. DATE SIGNED

19. ITEM NO.	20. SCHEDULE OF SUPPLIES/SERVICES	21. QUANTITY	22. UNIT	23. UNIT PRICE	24. AMOUNT
	Contracting Specialist: richard.kandrach@usda.gov Contracting Officer: stephanie.laruffa@usda.gov				

32a. QUANTITY IN COLUMN 21 HAS BEEN

☐ RECEIVED ☐ INSPECTED ☐ ACCEPTED, AND CONFORMS TO THE CONTRACT, EXCEPT AS NOTED: _____

32b. SIGNATURE OF AUTHORIZED GOVERNMENT REPRESENTATIVE	32c. DATE	32d. PRINTED NAME AND TITLE OF AUTHORIZED GOVERNMENT REPRESENTATIVE

32e. MAILING ADDRESS OF AUTHORIZED GOVERNMENT REPRESENTATIVE	32f. TELEPHONE NUMBER OF AUTHORIZED GOVERNMENT REPRESENTATIVE
	32g. E-MAIL OF AUTHORIZED GOVERNMENT REPRESENTATIVE

33. SHIP NUMBER	34. VOUCHER NUMBER	35. AMOUNT VERIFIED CORRECT FOR	36. PAYMENT	37. CHECK NUMBER
☐ PARTIAL ☐ FINAL			☐ COMPLETE ☐ PARTIAL ☐ FINAL	

38. S/R ACCOUNT NUMBER	39. S/R VOUCHER NUMBER	40. PAID BY

41a. I CERTIFY THIS ACCOUNT IS CORRECT AND PROPER FOR PAYMENT		42a. RECEIVED BY *(Print)*	
41b. SIGNATURE AND TITLE OF CERTIFYING OFFICER	41c. DATE	42b. RECEIVED AT *(Location)*	
		42c. DATE REC'D *(YY/MM/DD)*	42d. TOTAL CONTAINERS

Equipment Purchase for the Blue Ridge Ranger District, GA
Solicitation Number 12444026Q0127

Submitting Vendor Key Information "to be completed by vendor submitting Offer"

VENDOR NAME	EMAIL & PHONE	SAM.GOV UEI #

Statement of Requirement

Technical Specifications

Project

Blue Ridge Ranger District Equipment Attachment Purchase

General Information

Scope of Work

The contract shall provide equipment attachments that meet the specifications described in the technical requirements section of this document. There are three equipment attachments, each for a separate piece of equipment.

Contractor Requirements

Technical Requirements / Tasks

The contractor shall provide attachments that meet the following specifications.

1. Hydraulic Root Grapple
    - Compatible with equipment: Caterpillar 285XE Compact Track Loader
    - Land Pride RG3080 or similar
    - Width: 80"
    - Number of Upper Grapples: 2
    - Hitch Type: Universal Quick Hitch
    - Hose Couplers: (1) - 1 1/16" FORB male and (1) - 1 1/16" FORB female flat faced couplers
    - Hose Shields: 1/4 (6) Welded housing with 1/4 (6) removable cover
    - Cylinder Shields: 5/16 (8) Formed channels
2. Hydraulic Breaker
    - Compatible with equipment: Kubota KX030-4 Mini-Excavator
    - Model: BR3504 or similar
    - Equipment Maximum Auxiliary Oil Flow is 13.1 GPM. Flow requirement of breaker must range + and – the equipment maximum flow of 13.1 GPM.
    - Mounting Bracket: Land Pride 317-346a or similar mountable for a KX030-4
    - Hose Kit: BR04 HOSE KIT KX030/033/U35 or Land Pride 317-478A
3. Side Mounted Mulcher with Hydraulic adjustability
    - Compatible with equipment: Kubota Tractor M5-111
    - Model: Maschio Giraffa L190 or similar
    - Working width: 6 feet
    - Offset must hydraulicly adjust mulcher from rear to side of driven path
    - Mulcher must hydraulicly rotate from a range of +90° to -65°
    - PTO Compatibility: Standard 540 RPM
    - Rotary Type: Flail
    - Hitch Type: 3 Point Hitch Category II compatible

- General adjustability:

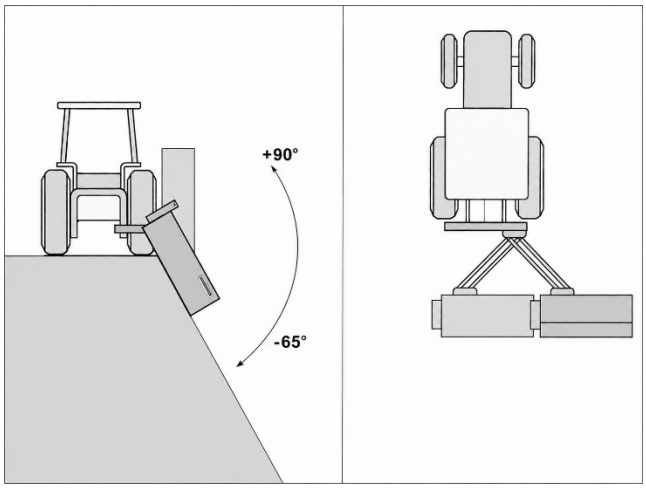

Schedule of Items -

CLIN	Description	Estimated Quantity	Unit of Issue	Unit Cost	Total
0001	Root Grapple for 285XE Track Loader (see specifications page)	1	EA	$	$
0002	Breaker with attachment hardware and hose assembly for KX030-4 Mini Excavator (see specifications page)	1	EA	$	$
0003	Off-set flail mulcher for M5-111 Tractor (see specifications page)	1	EA	$	$
0004	Delivery to: 3876 Young Harris Hwy, Blairsville GA 30512	1	EA	$	$
			TOTAL		$

The contractor shall furnish a Certificate of Conformance (COC) in accordance with Federal Acquisition Regulation (FAR) clause 52.246-15. COC must be submitted in the format specified in the clause. Offerors must be able to provide necessary certification including traceability to the manufacturer, manufacturer's COC, and its own certificate of conformance. Prospective vendors who are not the OEM or an authorized distributor must provide traceability for the offered product back to the manufacturer or authorized distributor.

Concerns having the expertise and required capabilities to provide these items are invited to submit offers in accordance with the requirements stipulated in this solicitation. Alternate Parts will be authorized if they are an approved alternate part that satisfies all form, fit, and function requirements of the original parts and conform to the approved configuration. All parts shall be NEW approved parts.

Technical Data -see attached

1. Solicitation Attachments
   The following documents are included as attachments to this solicitation and can be accessed via the "Attachments/Links" section of the posting.
   - Attachment 00 – Solicitation Template "this form"
   - Attachment 01 – Statement of Work (SOW)

Federal Acquisition Regulation (FAR) and United States Department of Agriculture Acquisition Regulation (AGAR) Clauses and Provisions

The clauses and provisions contained herein are applicable to any order awarded as a result of this solicitation. The terms and conditions set forth herein supersede all other terms and conditions. Acceptance of the order in accordance with (IAW) FAR 12.201-1(b)(2) constitutes acceptance of all terms and conditions contained herein.

As part of the Revolutionary FAR Overhaul (RFO), system updates may lag policy updates. The System for Award Management (SAM) may continue to require entities to complete representations based on provisions that are not included in this solicitation. Contracting officers will rely on representations from offers based on provisions in the solicitation. Entities are not required to, nor are they able to, update their entity registration to remove these representations in SAM.

52.252-2 Clauses Incorporated by Reference Feb 1998

This solicitation incorporates one or more clauses by reference, with the same force and effect as if they were given in full text. Upon request, the Contracting Officer will make their full text available. Also the full text of the clause may be accessed electronically at Internet address https://www.acquisition.gov/far-overhaul/far-part-deviation-guide/far-overhaul-part-52

52.212-4 Terms and Conditions—Commercial Products and Commercial Services (Nov 2025)
☐ Alternate I (Nov 2025) of 52.212-4
52.203-17 Contractor Employee Whistleblower Rights (Nov 2023)
52.203-19 Prohibition on Requiring Certain Internal Confidentiality Agreements or Statements (Jan 2017)
52.222-50 Combating Trafficking in Persons (Nov 2025)
☐ Alternate I (Nov 2025) of 52.222-50
52.226-8 Encouraging Contractor Policies to Ban Text Messaging While Driving (May 2024)
52.232-39 Unenforceability of Unauthorized Obligations (Jun 2013)
52.232-40 Providing Accelerated Payments to Small Business Subcontractors (Mar 2023)
52.233-3 Protest After Award (Sep 2025)
52.233-4 Applicable Law for Breach of Contract Claim (Sep 2025)
52.240-91 Security Prohibitions and Exclusions (Nov 2025)
☐ Alternate I (Nov 2025) of 52.240-91
52.244-6 Subcontracts for Commercial Products and Commercial Services (Nov 2025)

The following clauses are applicable if checked:

☐ 52.203-6 Restrictions on Subcontractor Sales to the Government (Jun 2020) with Alternate I (Nov 2021) of 52.203-6

☐ 52.203-13 Contractor Code of Business Ethics and Conduct (Nov 2021)
☐ 52.204-9 Personal Identity Verification of Contractor Personnel Jan 2011
☒ 52.204-13 System for Award Management—Maintenance (Nov 2025)
☐ 52.204-91 Contractor identification (Nov 2025)
☐ 52.209-6 Protecting the Government's Interest When Subcontracting with Contractors Debarred, Suspended, or Proposed for Debarment (Sep 2025)
☐ 52.209-9 Updates of Publicly Available Information Regarding Responsibility Matters (Sep 2025)
☒ 52.209-10 Prohibition on Contracting with Inverted Domestic Corporations (Sep 2025)
☐ 52.219-4 Notice of Price Evaluation Preference for HUBZone Small Business Concerns (Nov 2025)
☒ 52.219-6 Notice of Total Small Business Aside (Nov 2025)
☐ Alternate I (Mar 2020).
☐ 52.219-8 Utilization of Small Business Concerns (Nov 2025)
☐ 52.219-9 Small Business Subcontracting Plan (Nov 2025)
☐ Alternate III (Nov 2025) of 52.219-9.
☐ Alternate IV (Nov 2025) of 52.219-9
☐ 52.219-14 Limitations on Subcontracting (Nov 2025)
☐ 52.219-16 Liquidated Damages—Subcontracting Plan (Nov 2025)
☐ 52.219-33 Nonmanufacturer Rule (Nov 2025)
☒ 52.222-3 Convict Labor (June 2003)
☒ 52.222-19 Child Labor—Cooperation with Authorities and Remedies (Nov 2025)
☐ 52.222-35 Equal Opportunity for Veterans (Nov 2025)
☐ Alternate I (Jul 2014) of 52.222-35
☐ 52.222-36 Equal Opportunity for Workers with Disabilities (Nov 2025)
☐ Alternate I (Jul 2014) of 52.222-36
☐ 52.222-37 Employment Reports on Veterans (Nov 2025)
☐ 52.222-40 Notification of Employee Rights Under the National Labor Relations Act (Dec 2010
☒ 52.222-41 Service Contract Labor Standards (Aug 2018)
☐ 52.222-42 Statement of Equivalent Rates for Federal Hires (May 2014)

This Statement is for Information Only:
It is not a Wage Determination

Employee Class	Monetary Wage -- Fringe Benefits
Aircraft Mechanic	$XX.XX

☐ 52.222-43 Fair Labor Standards Act and Service Contract Labor Standards -- Price Adjustment (Multiple Year and Option Contracts) (Aug 2018)
☐ 52.222-44 Fair Labor Standards Act and Service Contract Labor Standards -- Price Adjustment (May 2014)

☐ 52.222-51 Exemption from Application of the Service Contract Labor Standards to Contracts for Maintenance, Calibration, or Repair of Certain Equipment-Requirements (May 2014)
☐ 52.222-53 Exemption from Application of the Service Contract Labor Standards to Contracts for Certain Services-Requirements (Nov 2025)
☐ 52.222-54 Employment Eligibility Verification (Nov 2025)
☐ 52.222-62 Paid Sick Leave Under Executive Order 13706 (Jan 2022)
☒ 52.222-90 Addressing DEI Discrimination by Federal Contractors (Apr 2026)
☐ 52.223-2 Reporting of Biobased Products Under Service and Construction Contracts (Nov 2025)
☐ 52.223-9 Estimate of Percentage of Recovered Material Content for EPA-Designated Items (May 2008)
☐ Alternate I (May 2008) of 52.223-9
☐ 52.223-11 Ozone-Depleting Substances and High Global Warming Potential Hydrofluorocarbons (Nov 2025)
☐ 52.223-12 Maintenance, Service, Repair, or Disposal of Refrigeration Equipment and Air Conditioners (Nov 2025)
☐ 52.223-23 Sustainable Products and Services (Nov 2025)
☐ 52.224-3 Privacy Training (Jan 2017)
☐ Alternate I (Jan 2017) of 52.224-3
☒ 52.225-1 Buy American-Supplies (Nov 2025)
☐ Alternate I (Oct 2022) of 52.225-1
☒ 52.225-3 Buy American--Free Trade Agreements--Israeli Trade Act (Nov 2025)
☐ Alternate II (Nov 2025) of 52.225-3.
☐ Alternate III (Nov 2025) of 52.225-3.
☐ Alternate IV (Oct 2022) of 52.225-3
☐ 52.225-5 Trade Agreements (Nov 2023)
☐ 52.225-19 Contractor Personnel in a Designated Operational Area or Supporting a Diplomatic or Consular Mission outside the United States (May 2020)
☐ 52.225-26 Contractors Performing Private Security Functions Outside the United States (Oct 2016)
☐ 52.226-4 Notice of Disaster or Emergency Area Set-Aside (Nov 2007)
☐ 52.226-5 Restrictions on Subcontracting Outside Disaster or Emergency Area (Aug 2025)
☐ 52.229-12 Tax on Certain Foreign Procurements
☐ 52.232-29 Terms for Financing of Purchases of Commercial Products and Commercial Services (Nov 2021)
☐ 52.232-30 Installment Payments for Commercial Products and Commercial Services (Nov 2021)
☒ 52.232-33 Payment by Electronic Funds Transfer— System for Award Management (Oct 2018)
☒ 52.232-34 Payment by Electronic Funds Transfer—Other Than System for Award Management (Jul 2013)
☐ 52.232-36 Payment by Third Party (Nov 2025)
☐ 52.237-2 Protection of Government Buildings, Equipment, and Vegetation (Apr 1984)

☐ 52.237-3 Continuity of Services (Jan 1991)
☐ 52.240-92 Security Requirements (Nov 2025)
☐ 52.240-93 Basic Safeguarding of Covered Contractor Information Systems (No 2025)
☐ 52.247-64 Preference for Privately Owned U.S.-Flag Commercial Vessels (Nov 2025)
☐ Alternate I (Apr 2023) of 52.247-64.
☐ Alternate II (Nov 2021) of 52.247-64

Other Applicable Clauses

52.216-18 Ordering (Aug 2020)
52.216-19 Delivery – Order Limitations (Oct 1995)
52.216-21 Requirements (Nov 2025)
☐ Alternate I (Apr 1984) of 52.216-21
52.216-22 Indefinite Quantity (Nov 2025)
52.217-6 Option for Increased Quantity (Mar 1989)
52.217-7 Option for Increased Quantity - Separately Priced Line Item (Mar 1989)
52.217-8 Option to Extend Services (Nov 1999)
30 calendar days prior to contract expiration
52.217-9 Option to Extend the Term of the Contract (Mar 2000)
(a) 30 Calendar days prior to contract expiration and 60 days
(c) five years.
52.232-90 Fast Payment Procedures (Nov 2025)
52.237-2 Protection of Government Buildings, Equipment, and Vegetation (Apr 1984)
52.245-1 Government Property (Sep 2021)
☐ Alternate I (Sep 2021) of 52.245-1
52.245-2 Government Property
52.245-9 Use and Charges
52.246-15 Certificate of Conformance (Apr 1984)
52.247-29 F.O.B. Origin (Feb 2006)
52.247-34 F.O.B. Destination (Jan 1991)

AGAR Clauses

452.203-71 Anti-Discrimination and Diversity, Equity, and Inclusion (DEI) Compliance (May 2026)

(a) By entering into this contract, the contractor certifies that:

(1) It is compliant with all applicable Federal anti-discrimination laws and the Equal Protection principles of the U.S. Constitution, and it will remain compliant for the duration of the contract.

(2) Neither it nor any subcontractor or teaming partner operates or funds any program, policy, or initiative that promotes DEI in a manner that violates any applicable Federal anti-discrimination laws, including but not limited to Title VI and VII of the Civil Rights Act of 1964, or the Equal Protection principles of the U.S. Constitution, and the contractor and any subcontractor or teaming partner will not do so for the duration of the contract.

(b) If the contractor participates in, facilitates, or funds programs that implicate Title VI of the Civil Rights Act of 1964 or Title IX of the Education Amendments of 1972, as amended, including but not limited to grants to or for schools, colleges, universities, 4-H programs, non-governmental organization (NGO) programs, sports programs, and education-related grants to prisons or other

detention facilities, the contractor certifies that it will remain compliant with those laws, including the requirements set forth in Executive Order 14168, Defending Women from Gender Ideology Extremism and Restoring Biological Truth to the Federal Government, and Executive Order 14173, Ending Illegal Discrimination and Restoring Merit-Based Opportunity.

(c) The contractor affirms that the above requirements are conditions of payment that go to the essence of the contract and are therefore material terms of the contract. Payments under the contract are predicated on compliance with the above requirements, and therefore the contractor is not eligible for funding under the contract or to retain any funding under the contract absent compliance with the above requirements.

(d) This certification reflects a change in the Government's position regarding the materiality of the foregoing requirements and therefore any prior payment of similar claims does not reflect the materiality of the foregoing requirements to this contract.

(e) Submission of a knowing false statement relating to contractor's compliance with the above requirements and/or eligibility for the contract may subject the contractor to liability under the False Claims Act, 31 U.S.C. § 3729, and/or criminal liability, including under 18 U.S.C. §§ 287 and 1001.

(f) The contractor must include the provisions of this clause in all subcontract solicitations.

(g) Failure on the part of the contractor or its subcontractors to comply with the terms of this clause may be grounds for the Contracting Officer to terminate this contract for default.

(End of Clause)

AGAR 452.203-72 Unenforceable Supplier Terms (MAY 2026)

(a) Definitions.

Supplier terms mean provisions customarily drafted by vendors of supplies or services and intended to create a binding legal obligation on the end user. The term applies:

1. Regardless of the format or style of the document. For example, supplier terms may appear in standard terms of sale or lease, Terms of Service (TOS), End User License Agreement (EULA), or another similar legal instrument or agreement, and may be presented as part of a proposal or quotation responding to a solicitation for a contract or order or otherwise become effective after the contract date.

2. Regardless of the media or delivery mechanism used. For example, supplier terms may be presented as one or more paper documents or may appear on a computer or other electronic device screen during a purchase, software installation, other product delivery, registration for a service, or another transaction.

(b) Applicability. When any supply or service acquired under this contract is subject to supplier terms, the supplier terms are deemed part of the contract only to the extent they are consistent with this clause. Supplier terms that conflict with any part of this clause, the contract, or Federal law are void and will not be considered incorporated into a contract, even if they are physically present in a contract documentation or systems. In the event of any inconsistency between supplier terms and this contract, this clause and the terms of the Government contract must govern and supersede any supplier terms in all cases.

(c) Authorization Required. Notwithstanding any other provision, no supplier terms must be binding on the Government unless the term is expressly authorized on the USDA Supplier Terms Authorization Form signed by the Contracting Officer, and the completed Authorization Form has been incorporated into the contract.

(d) Unenforceable Terms. Any supplier terms that impose obligations or restrictions inconsistent with applicable Federal law are unenforceable against the Government and deemed stricken from the agreement. This includes, but is not limited to, any clause that:

(1) Requires the Government to pay future fees, penalties, interest, legal costs, early-termination fees, cancellation fees, minimum purchase commitments, true-up payments, seat-count minimums, usage minimums, continued-use charges, or any other financial obligation not expressly authorized by the contract.

(2) Requires the Government to indemnify the contractor or any other entity.

(3) Restricts the Government's ability to obtain similar supplies or services from another source.

(4) Imposes any penalty, financial or otherwise, based on the Government's decision not to exercise an option.

(5) Subjects the United States Government to the laws of any U.S. state, territory, district, municipality, or foreign nation, except where Federal law expressly permits such application.

(6) Requires dispute resolution in a forum or venue other than one prescribed by applicable Federal law.

(7) Establishes a period of limitations for bringing an action that differs from that provided by applicable Federal law.

(8) Grants the contractor rights to use, mine, access, aggregate, analyze, or otherwise exploit Government data, usage data, or metadata.

(9) Deems the Government to have accepted initial or revised terms based on silence, continued performance, or failure to object.

(10) Grants the supplier the right to audit Government facilities, systems, records, or use of the product or service, except as expressly authorized by the contract and applicable Federal law.

(11) Requires the Government to accept supplier security requirements, network access requirements, monitoring, penetration testing, or other technical or security measures.

(12) Permits the supplier to suspend, degrade, or terminate access to products or services based on alleged non-payment, alleged breach, automated security triggers.

(13) Limits the Government's right to use, install, access, test, evaluate, or transfer the licensed product or service in any manner consistent with the contract and Federal law.

(14) Requires the Government to store, process, maintain, or transmit data in a particular geographic location, or permits the supplier to transfer Government data outside the United States, except as expressly authorized by applicable Federal law.

(15) Authorizes the supplier to use the Government's name, seal, trademark, logo, or any reference to the Government as an end user or customer for marketing, publicity, promotional activities, press releases, or similar purposes.

(16) Incorporates by reference, or requires the Government to accept, terms or conditions imposed by any third party, subcontractor, or upstream service provider, unless such terms are expressly incorporated into the contract by bilateral modification.

(17) Limits, conditions, or negates the contractor's performance obligations, service levels, or remedies through a supplier-provided service level agreement (SLA).

(18) Uses Government data, usage data, metadata, prompts, content, or interactions to train, fine-tune, improve, or derive any artificial intelligence, machine learning, or automated decision-making model.

(19) Subjects the Government to automated decision-making, automated risk scoring, automated content moderation, or any algorithmic process that may affect access, performance, or rights under the contract.

(20) Utilizes artificial intelligence or algorithmic tools that produce decisions, recommendations, or outputs affecting contract performance without providing transparency, explainability, auditability, and bias-mitigation consistent with applicable Federal law and policy.

(21) Profiles, tracks, or analyzes Government user behavior, preferences, communications, or interactions for personalization, marketing, or algorithmic optimization purposes.

(e) Non-binding Actions. Neither the Government nor any Government authorized end user is deemed to have consented to any term, condition, or clause by virtue of its inclusion in the supplier agreement or through the use of clickwrap, browsewrap, "I agree" mechanisms, or similar means. Execution of such mechanisms does not bind the Government or its authorized end users to any unenforceable terms.

(f) End user. The supplier agreement must bind the ordering activity as the end user to the extent it does not conflict with the terms of this clause, but it must not bind or impose personal liability on any Government employee or any person acting on behalf of the Government in their personal capacity.

(g) Law and disputes. The supplier agreement is governed by Federal law.

(h) Statutory exception. This clause does not apply to indemnification or any other payment by the Government that is expressly authorized by statute and specifically authorized under applicable agency regulations and procedures.

(i) Continued performance. The supplier or licensor must not unilaterally revoke, terminate, or suspend any rights granted to the Government except as allowed by the contract. If the supplier or licensor believes the ordering activity to be in breach of the supplier agreement, it must pursue its rights under the Contract Disputes Act or other applicable Federal statute while proceeding diligently with performance, pending final resolution of any dispute in accordance with the Disputes Clause at FAR 52.212-4(d) or FAR 52.233-1, as applicable.

(j) Arbitration. Binding arbitration must not be used unless specifically authorized by agency guidance.

(k) Equitable or injunctive relief. Equitable or injunctive relief, including the award of attorney fees, costs, or interest, may be awarded against the United States Government only when explicitly provided by statute (e.g., the Prompt Payment Act or the Equal Access to Justice Act).

(l) Revisions to supplier agreements. Any revisions to the supplier agreement must be incorporated into the contract using a bilateral modification. Unilateral revisions are not binding on the Government.

(m) No automatic renewals. If any license or service tied to periodic payment is provided under the supplier agreement (e.g., annual software maintenance or annual lease term), such license or service must not renew automatically upon expiration of its current term without prior express written consent from an authorized Government representative.

(n) Indemnification. Any clause of the supplier agreement requiring the supplier or licensor to defend or indemnify the end user is amended to provide that the U.S. Department of Justice has the sole right to represent the United States in any such action, in accordance with 28 U.S.C. 516.

(o) Taxes or surcharges. Any taxes or surcharges which the supplier or licensor seeks to pass along to the Government as end user will be governed by the terms of the associated Government contract or order and must be submitted to the Contracting Officer for a determination of applicability prior to invoicing unless specifically agreed otherwise.

(p) Non-assignment. The supplier agreement may not be assigned, nor may any rights or obligations thereunder be delegated, without the Government's prior approval, except as expressly permitted by FAR 52.212-4(b) or FAR 52.232-23, as applicable.

(q) Confidential information. If the supplier agreement includes a confidentiality clause, such clause is amended to state that neither the agreement nor the contract price list, as applicable, must be deemed "confidential information." Issues regarding release of "unit pricing" will be resolved consistent with the Freedom of Information Act. Notwithstanding anything in the supplier agreement to the contrary, the Government may retain any confidential information as required by law, regulation, or its internal document retention procedures for legal, regulatory, or compliance purposes; provided, however, that all such retained confidential information will continue to be subject to the confidentiality obligations of the supplier agreement.

(r) Conflict with Federal law. If any other language, provision, or clause of the supplier agreement conflicts or is inconsistent with Federal law or the terms and conditions of this contract, such language, provisions, or clauses will be considered null and void and will not be binding on the United States Government.

(End of Clause)

452.204–70 Modification for Contract Closeout (Apr 2026)
(a) If unliquidated funds in the amount of $1000 or less remain on the contract, the Contracting Officer (Contracting Officer) may issue a unilateral modification for deobligation. The contractor will receive a copy of the modification but is not required to provide a signature. The Contracting Officer will immediately proceed with contract closeout upon completion of the period of performance, receipt and acceptance of supplies or services, and final payment.

(b) For commercial contracts not exceeding the simplified acquisition procedure threshold under FAR 12.001(c), if more than $1,000 in unliquidated funds remain at closeout, the Contracting Officer will issue a bilateral deobligation modification. Only the modification requires the contractor's signature, though a Release of Claims may be requested. If the required documents are not returned within 60 days, the Contracting Officer will issue a unilateral modification and proceed with closeout once performance is complete, acceptance is confirmed, and final payment is made.

(c) For all other non-commercial or non–cost-reimbursement contracts, if more than $1,000 in unliquidated funds remain at closeout, the Contracting Officer will issue a bilateral deobligation modification and a Release of Claims, both requiring contractor signature. If these documents are not returned within 120 days, the Contracting Officer will issue a unilateral modification u and proceed with closeout upon completion of performance, acceptance, and final payment.
(End of Clause)

Award Type
It is anticipated that a Purchase Order will be awarded as a result of this synopsis/solicitation.

The Government intends to make one award from this solicitation. Therefore, to be considered responsive, contractors must submit pricing for all items.

Evaluation and Basis for Award
The provision at FAR 52.212-2, Evaluation—Commercial Products and Commercial Services is not applicable to this solicitation. In lieu of this provision, quotes will be evaluated in accordance with FAR 12.203 based on the criteria listed below. Award will be made to the offeror representing the best value to the Government.

Technical Approach:
The technical approach will evaluate the ability of the offeror to provide a sound and compliant approach that meets all requirements and shows a thorough understanding of them. It is the contractor's responsibility to ensure their quotation clearly demonstrates their capability to meet these requirements. All offerors must provide the following minimum information and documentation with their quotations to be considered responsive and have their offers evaluated:

- Ability of the offeror to meet the schedule requirements listed in the Statement of Work (SOW).
- Detailed explanation of any requirement listed in the SOW that cannot be successfully accomplished by the offeror.

Price:
The offeror shall provide pricing as requested in the Schedule of Items on page **X** of this Request for Quote. Failure to propose pricing for all individual line items may result in a quotation being excluded from further consideration. The offeror's quotation will be evaluated in accordance with FAR 12.204, to determine if it is fair and reasonable.

Past Performance:
The Government may utilize any references provided by the Contractor, along with information available from past contracts/orders with the USDA and any information found using sources such as Federal Government sources or the Contractor Performance Assessment Reporting System (CPARS) to determine if the Contractor has acceptable or neutral Past Performance. Past Performance will be evaluated using the following rating system:

- Acceptable: The contractor shows a demonstrated ability to meet contract requirements in prior or current contracts, including quality of work, timeliness, cost control, business relations, and adherence to contract terms.

- Neutral: Offeror does not have a past performance record.

- Unacceptable: The contractor has a documented history of failing to meet contract requirements, including poor quality, missed deadlines, cost overruns, lack of responsiveness, or unethical behavior.

FAR 52.212-2 Evaluation - Commercial Products and Commercial Services (Nov 2025)

(a) Evaluation factors. The Government will award a contract resulting from this solicitation to the responsible Offeror whose offer conforming to the solicitation will be most advantageous to the Government, price and other factors considered. The following factors will be used to evaluate offers:

(b) Options (if applicable). The Government will evaluate offers for award purposes by adding the total price for all options to the total price for the basic requirement. The Government may determine that an offer is unacceptable if the option prices are significantly unbalanced. The evaluation of options does not obligate the Government to exercise the option(s).

(c) Notice of award. A written notice of award or acceptance of an offer furnished to the successful Offeror within the time for acceptance specified in the offer, shall result in a binding contract without further action by either party. Before the offer's specified expiration time, the Government may accept an offer (or part of an offer), whether or not there are negotiations after its receipt, unless a written notice of withdrawal is received before award.
(End of provision)

Delivery Information

F.o.b. Origin, is requested as the F.O.B. point for all deliverables.
- All offers will be considered F.O.B. Destination unless F.O.B. origin is specified AND estimated shipping costs are included.

The USDA requires delivery of all items by see SF1449. Early deliveries will be accepted.

Shipping Instructions:
Items shall be shipped to the following address:
See SF1449

52.252-1 Solicitation Provisions Incorporated by Reference Feb 1998
This solicitation incorporates one or more solicitation provisions by reference, with the same force and effect as if they were given in full text. Upon request, the Contracting Officer will make their full text available. The offeror is cautioned that the listed provisions may include blocks that must be completed by the offeror and submitted with its quotation or offer. In lieu of submitting the full text of those provisions, the offeror may identify the provision by paragraph identifier and provide the appropriate information with its quotation or offer. Also, the full text of a solicitation provision may be accessed electronically at this/these address(es): https://www.acquisition.gov/far-overhaul/far-part-deviation-guide/far-overhaul-part-52

52.212-1 Instructions to Offerors - Commercial Products and Commercial Services (Nov 2025)
FAR 52.212-1 is amended as follows:
Period for acceptance of offers.
The Offeror agrees to hold the prices in its offer firm for **90 calendar days** from the date specified for receipt of offers.

Questions
Questions shall be submitted via email to see SF1449 and are due no later than November 15, 2025, at 12:00 PM Pacific Time. This will ensure enough time to respond before the solicitation period ends. Please include the solicitation name and number as the subject line of the email.

52.203-18 Prohibition on Contracting with Entities that Require Certain Internal Confidentiality Agreements or Statements-Representation (Jan 2017)
52.209-2 Prohibition on Contracting with Inverted Domestic Corporations - Representation (Sep 2025)
52.209-11 Representation by Corporations Regarding Delinquent Tax Liability or a Felony Conviction under any Federal Law (Sep 2025)
52.240-90 Security Prohibitions and Exclusions Representations and Certifications (Nov 2025)

☐ 52.203-11 Certification and Disclosure Regarding Payments to Influence Certain Federal Transactions (Sep 2024)
☒ 52.204-7 System for Award Management—Registration (Nov 2025)

☐ Alternate I (Nov 2025) to 52.204-7
☐ 52.204-90 Offeror Identification (Nov 2025)
☐ 52.207-6 Solicitation of Offers from Small Business Concerns and Small Business Teaming Arrangements or Joint Ventures (Multiple-Award Contracts) (Aug 2024)
☐ 52.209-12 Certification Regarding Tax Matters (Oct 2025)
☐ 52.219-2 Equal Low Bids (Nov 2025)
☒ 52.222-18 Certification Regarding Knowledge of Child Labor for Listed End Products (Feb 2021)
☐ 52.222-48 Exemption from Application of the Service Contract Labor Standards for Maintenance, Calibration, or Repair of Certain Equipment–Certification (Nov 2025)
☐ 52.222-52 Exemption from Application of the Service Contract Labor Standards for Certain Services-Certification (Nov 2025)
☐ 52.222-56 Certification Regarding Trafficking in Persons Compliance Plan (Oct 2020)
☐ 52.223-4 Recovered Material Certification (May 2008)
☒ 52.225-2 Buy American Certificate (Oct 2022)
☒ 52.225-4 Buy American-Free Trade Agreements-Israeli Trade Act Certificate (Nov 2025)
☐ 52.225-6 Trade Agreements-Certificate (Feb 2021)
☐ 52.226-3 Disaster or Emergency Area Representation (Nov 2007)
☐ 52.229-11 Tax on Certain Foreign Procurements—Notice and Representation (Jul 2025)

Other Applicable FAR Provisions

52.216-31 Time and Materials/Labor Hour Proposal Requirements - Commercial Acquisition (Nov 2021)
52.217-5 Evaluation of Options (Nov 2025)
52.225-18 Place of Manufacture (Aug 2018)
52.233-2 Service of Protest (Sep 2025)
52.237-1 Site Visits (Apr 1984)

AGAR Provisions

452.203-70 Anti-Discrimination and Diversity, Equity, and Inclusion (DEI) Certification (Dec 2025)

(a) By submission of its offer, the offeror certifies that:

(1) It is compliant with all applicable Federal anti-discrimination laws and the Equal Protection principles of the U.S. Constitution.
(2) Neither it nor any proposed subcontractor or teaming partner operates or funds any program, policy, or initiative that promotes DEI in a manner that violates any applicable Federal anti-discrimination laws, including but not limited to Title VI and VII of the Civil Rights Act of 1964, or the Equal Protection principles of the U.S. Constitution.

(b) If the offeror participates in, facilitates, or funds programs that implicate Title VI of the Civil Rights Act of 1964 or Title IX of the Education Amendments of 1972, as amended, including but not limited to grants to or for schools, colleges, universities, 4-H programs, non-governmental

organization (NGO) programs, sports programs, and education-related grants to prisons or other detention facilities, by submission of its offer, the offeror certifies that it is compliant with those laws, including the requirements set forth in Executive Order 14168, Defending Women from Gender Ideology Extremism and Restoring Biological Truth to the Federal Government, and Executive Order 14173, Ending Illegal Discrimination and Restoring Merit-Based Opportunity.

(c) The offeror affirms that the above requirements are conditions of payment that go to the essence of the contract and are therefore material terms of the contract. Payments under the contract are predicated on compliance with the above requirements, and therefore the offeror will not be eligible for funding under the contract or to retain any funding under the contract absent compliance with the above requirements.

(d) This certification reflects a change in the Government's position regarding the materiality of the foregoing requirements and therefore any prior payment of similar claims does not reflect the materiality of the foregoing requirements to this contract.

(e) Submission of a knowing false statement relating to offeror's compliance with the above requirements and/or eligibility for the contract may subject the offeror to liability under the False Claims Act, 31 U.S.C. § 3729, and/or criminal liability, including under 18 U.S.C. §§ 287 and 1001.

(f) Failure on the part of the offeror or its subcontractors to comply with the terms of this clause may be grounds for the Contracting Officer to terminate the contract for default.
(End of Provision)

NOTICE FOR FILING AGENCY PROTESTS
United States Department of Agriculture (USDA) Protest Procedures

The United States Department of Agriculture (USDA) is committed to fair, transparent, and efficient acquisitions. Interested parties with concerns about this solicitation are encouraged to seek resolution through the following USDA procedures.

Tier 1: Contracting Officer Concern Resolution

Submission: Interested parties with concerns about either the solicitation or subsequent award should first submit their concern directly to the Contracting Officer, providing sufficient detail to allow the Contracting Officer to understand and assess the issue.

Process: The Contracting Officer will review the concern, seek clarification as needed, and engage with the interested party to attempt prompt resolution.

Review Timeline: The Contracting Officer will make every effort to provide a response or resolution within 10 business days of receiving the concern.

Effect on Award or Performance: Tier 1 engagement is not considered an official notification of filing an agency protest and does not pause solicitation deadlines, delay award decisions, or suspend contract performance.

Next Steps: If the matter cannot be resolved at Tier 1, the interested party may file a written agency protest under Tier 2.
USDA encourages all parties to seek resolution with the Contracting Officer before filing an agency protest.

Tier 2: Agency Protest
If concerns cannot be resolved at Tier 1, an interested party may file a written agency protest with either the Contracting Officer or the USDA Independent Review Authority. The decision by the USDA Independent Review Authority is an alternative to a decision by the Contracting Officer. The USDA Independent Review Authority will not consider an appeal of the Contracting Officer's decision on an agency protest.
The protest must state whether the protester elects review by the Contracting Officer, by the UDSA Independent Review Authority. If no election is stated, the Contracting Officer will decide the protest.

Required Information: Protests shall include the information set forth in FAR 33.104-4 (a)(3). Failure to submit the required information may result in a delay or dismissal of the protest.

Submission: Agency protests should be submitted electronically to SPE.inquiry@usda.gov and the Contracting Officer.

Timeliness: Protests must be filed within the timeframes specified in FAR 33.104.

Effect on Award or Performance: Contract awards or performance will be suspended during the protest period unless justified in writing for urgent and compelling reasons or determined to be in the best interest of the Government.

Review Timeline: USDA strives to resolve agency-level protests within 35 business days of receipt.

Election of Forum: By filing a protest with USDA, the protesters agree not to file a protest on the same matter with the Government Accountability Office (GAO) or any other external forum while the agency protest is pending. If such a protest is filed externally, the USDA agency protest will be dismissed.

Questions: Questions regarding this notice or protest procedures should be directed to the Contracting Officer identified in this solicitation.