United States Department of Agriculture
Forest Service

CALIFORNIA
TEHAMA COUNTY
(R5) PACIFIC SOUTHWEST REGION
LASSEN NATIONAL FOREST
ALMANOR RANGER DISTRICT

RECONSTRUCTION PLANS FOR SPECIFIED ROADS

PROMENADE PARK STEWARDSHIP IRSC

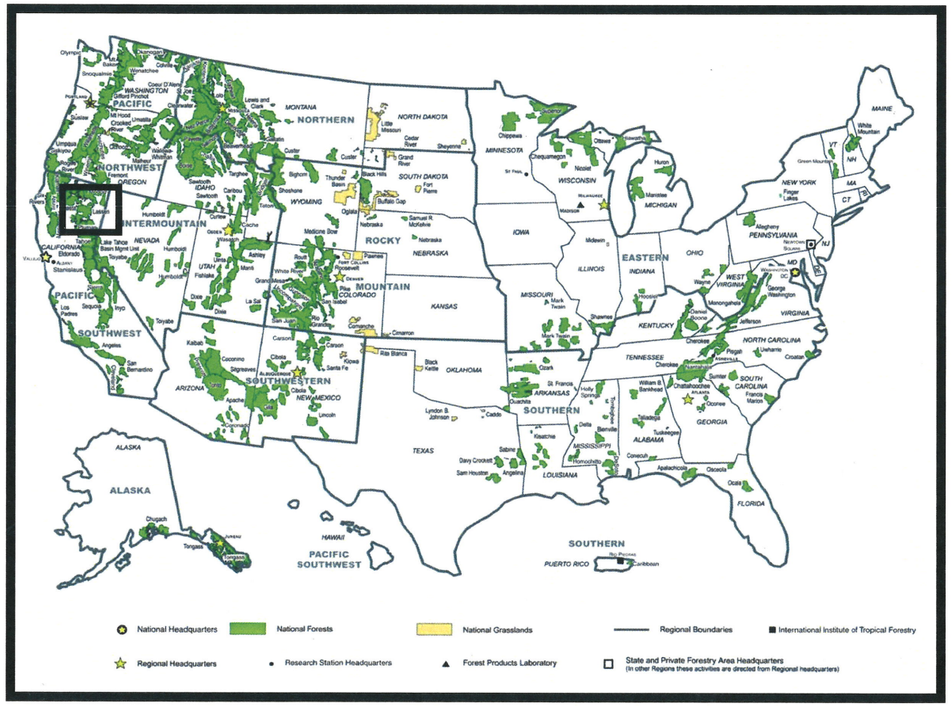

FOREST LOCATION MAP

TRAVEL DIRECTIONS:

FROM CHESTER, CA HEAD WEST ON CA-36 FOR 21.2 MILES AND TURN LEFT ONTO CA-172, THE PROJECT AREA WILL BE ALONG CA-172.

INDEX OF SHEETS

SHEET	SHEET TITLE	DATE
G-01	TITLE SHEET	1/21/2026
G-02	VICINITY MAP	1/21/2026
G-03	GENERAL NOTES	1/21/2026
G-04	ESTIMATE OF QUANTITIES	1/21/2026
G-05	WORKLIST	1/21/2026
C-01	ROAD STRUCTURE DETAIL	1/21/2026
C-02	CLEARING DETAIL	1/21/2026
C-03	ROLLING DIP DETAIL	1/21/2026
C-04	PIPE CULVERT DETAIL	1/21/2026

DESIGN ENGINEER — DATE 4/16/26

DISTRICT RANGER — DATE 4/23/2026

APPROVED:

FOREST ENGINEER — DATE 4/16/26

FOREST SUPERVISOR — DATE 4/27/26

SHEET 001 OF 010

4/16/26 13:39 GZEPEDA\BUENROSTRO C:\USERS\GZEPEDA\BUENROSTRO\BOX\7700\TRANSPORTATIONSYSTEM\PROJECTS\2026_BIDWELL PARK FIRE SALVAGE\DRAWINGS\BIDWELL PARK FIRE SALVAGE PLANS.DWG;

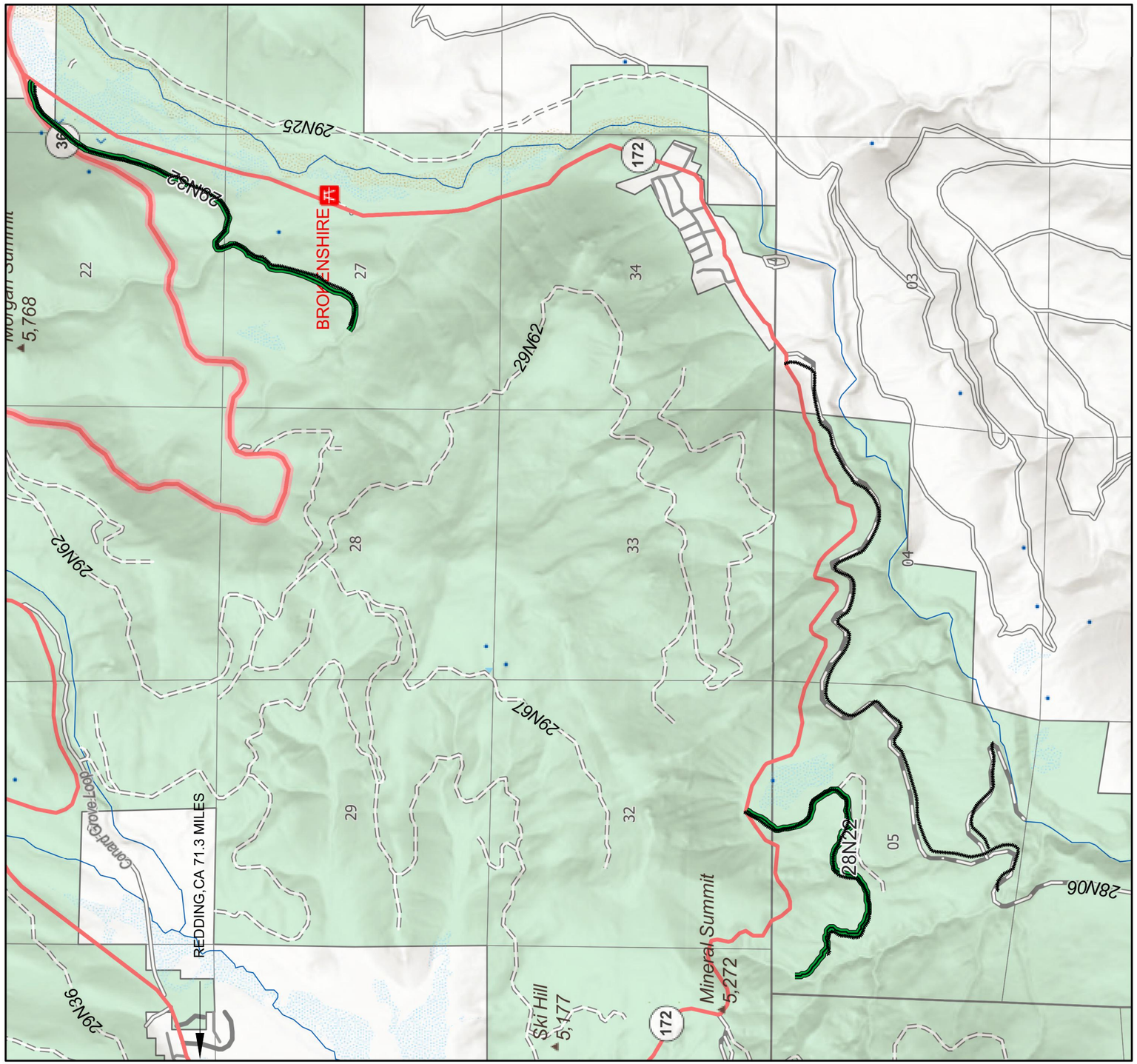

1:43,000

0 0.28 0.55 1.1 mi

0 0.45 0.9 1.8 km

Esri, NASA, NGA, USGS, FEMA

1/21/2026

SPECIFIED ROADS

United States Department of Agriculture
Forest Service

R5
PACIFIC SOUTHWEST

STAMPS, LOGOS, AND SEALS

NO.	REVISION / ISSUE	DATE
4		
3		
2		
1		

PROJECT NAME

PROMENADE PARK STEWARDSHIP IRSC

LASSEN NATIONAL FOREST

ALMANOR RANGER DISTRICT

DRAWING TITLE

VICINITY MAP

DATE 4/16/2026	ARCHIVE NO.
DESIGNER G.ZB	DRAWING SHEET NO. G-02
DRAWN G.ZB	
CHECKED T.S.	
PROJECT NO.	SHEET 002 OF 009

4/27/26 11:50 G:\ZEPEDABUENROSTRO C:\USERS\GZEPEDABUENROSTRO\BOX\770\TRANSPORTATION\SYSTEM\PROJECTS\2026_BID\WELL PARK FIRE SALVAGE (NO BID - CANCELLED)\DRAWINGS\BID\WELL PARK FIRE SALVAGE PLANS.DWG;

GENERAL NOTES:

REFER TO APPLICABLE SECTIONS OF "STANDARD SPECIFICATIONS FOR CONSTRUCTION OF ROADS AND BRIDGES ON FEDERAL HIGHWAY PROJECTS," (FP–24) AND ATTACHED FOREST SERVICE FP–24 SUPPLEMENTAL SPECS (FSSS) FOR CONTRACT SPECIFICATIONS.

AN APPROVED TRAFFIC CONTROL PLAN SHALL BE SUBMITTED PRIOR TO CONSTRUCTION. SEE FSSS 156 FOR DETAILS ABOUT ALLOWED CLOSURE TIME AND DELAYS ALLOWED.

AN APPROVED EROSION CONTROL PLAN SHALL BE SUBMITTED PER FSSS 157.03.

AN APPROVED QUALITY CONTROL PLAN SHALL BE SUBMITTED PER SECTION 153.

WATER FOR DUST CONTROL SHALL BE REQUIRED PER SECTION 158.03(b).
CLEARING AND GRUBBING SLASH DISPOSAL METHOD; SCATTERING

APPLICABLE USDA FOREST SERVICE WATER QUALITY BEST MANAGEMENT PRACTICES (BMPs) (SECTION 12.2: ROAD AND BUILDING SITE CONSTRUCTION) SHALL BE ADHERED TO. BMPs CAN BE FOUND AT THE FOLLOWING URL:

http://www.fs.fed.us/r5/publications/water_resources/waterquality/water–best–mgmt.pdf

CONSTRUCTION TOLERANCE D FOR ALL ROADS

United States Department of Agriculture
Forest Service

R5
PACIFIC SOUTHWEST

STAMPS, LOGOS, AND SEALS

NO.	REVISION / ISSUE	DATE
4		
3		
2		
1		

PROJECT NAME

PROMENADE PARK STEWARDSHIP IRSC

LASSEN NATIONAL FOREST

ALMANOR RANGER DISTRICT

DRAWING TITLE

GENERAL NOTES

DATE 4/16/2026	ARCHIVE NO.
DESIGNER G.ZB	DRAWING SHEET NO. G-03
DRAWN G.ZB	
CHECKED T.S.	
PROJECT NO.	SHEET 003 OF 009

4/27/26 11:50 GZEPEDA\BUENROSTRO C:\USERS\GZEPEDA\BUENROSTRO\BOX\7790\TRANSPORTATION\SYSTEM\PROJECTS\2026_BIDWELL PARK FIRE SALVAGE (NO BID - CANCELLED)\DRAWINGS\BIDWELL PARK FIRE SALVAGE PLANS.DWG;

PROMENADE PARK STEWARDSHIP IRSC		ROAD NO.	28N06	28N06A	28N22	29N32
		MILES	3.05	0.45	1.35	1.73
		RECON/CON	RECON	RECON	RECON	RECON
ITEM NO	DESCRIPTION	UNITS	SUMMARY OF QUANTITIES			
15101	Mobilization	LUMP SUM	ALL	ALL	ALL	ALL
20302	Removal of CMP, disposal method disposal method (a)	EACH	2			
30307	Roadbed reconditioning, compaction method 2	MILE			0.04	0.08
60201	24 inch pipe culvert, CMP, gage 0.064 inch-thickness, compaction method 2	FOOT	74.00			
60704	Clean Pipe	EACH			4	
60711A	Reconditioning drainage structures, culvert catchbasin	EACH	9	1		
60711B	Reconditioning drainage structures, culvert inlet	EACH	5	2	2	2
60711C	Reconditioning drainage structures, rolling dip	EACH			4	
60711D	Reconditioning drainage structures, jack pipe	EACH	1			
62510	Seeding, dry method	ACRE	1.21	0.20	1.12	1.20
30112	Aggregate surface course, grading G	CUBIC YARD				10.00
62515	Mulching, dry method	ACRE	1.21	0.20	1.12	1.20

USDA FOREST SERVICE

United States Department of Agriculture
Forest Service

R5
PACIFIC SOUTHWEST

STAMPS, LOGOS, AND SEALS

NO.	REVISION / ISSUE	DATE
4		
3		
2		
1		

PROJECT NAME

PROMENADE PARK STEWARDSHIP IRSC

LASSEN NATIONAL FOREST

ALMANOR RANGER DISTRICT

DRAWING TITLE

ESTIMATE OF QUANTITIES

DATE 4/16/2026	ARCHIVE NO.
DESIGNER G.ZB	DRAWING SHEET NO. G-04
DRAWN G.ZB	
CHECKED T.S.	
PROJECT NO.	SHEET 004 OF 009

6/24/26 14:56 GZEPEDA:BUENROSTRO C:\USERS\GZEPEDABUENROSTRO\BOX\77901TRANSPORTATIONSYSTEM\PROJECTS\CLOSED (OR INACTIVE)\2026_BIDWELL PARK FIRE SALVAGE (NO BID - CANCELLED)\DRAWINGS\BIDWELL PARK FIRE SALVAGE PLANS.DWG;

WORKLIST

Road # 28N06

BEG M.P.	END M.P.	PAY ITEM	WORK DESCRIPTION	QTY	UNIT
0.00	0.00		BEGINNING OF PROJECT		
0.00	3.05	15101	Mobilization	ALL	LUMP SUM
0.00	3.05	62510	Seeding, dry method	1.21	ACRE
0.00	3.05	62515	Mulching, dry method	1.21	ACRE
0.06	0.06	60711A	Reconditioning drainage structures, culvert catchbasin	1	EACH
0.17	0.17	60711A	Reconditioning drainage structures, culvert catchbasin	1.00	EACH
0.26	0.26	60711A	Reconditioning drainage structures, culvert catchbasin	1.00	EACH
0.26	0.26	60711D	Reconditioning drainage structures, jack pipe	1	EACH
0.31	0.31		Reference: Existing Cattle Guard		
0.40	0.40	60711A	Reconditioning drainage structures, culvert catchbasin	1.00	EACH
0.40	0.40	60711B	Reconditioning drainage structures, culvert inlet	1.00	EACH
0.72	0.72	60711A	Reconditioning drainage structures, culvert catchbasin	1.00	EACH
1.17	1.17	60711B	Reconditioning drainage structures, culvert inlet	1.00	EACH
1.41	1.41	20302	Removal of CMP, disposal method disposal method (a)	1.00	EACH
1.41	1.41	60201	24 inch pipe culvert, CMP, gage 0.064 inch-thickness, compaction method 2	40.00	FOOT
1.65	1.65	60711A	Reconditioning drainage structures, culvert catchbasin	1.00	EACH
1.65	1.65	60711B	Reconditioning drainage structures, culvert inlet	1.00	EACH
1.89	1.89		JCT w ith non-system road, left		
1.97	1.97	60711B	Reconditioning drainage structures, culvert inlet	1.00	EACH
2.06	2.06	60711A	Reconditioning drainage structures, culvert catchbasin	1.00	EACH
2.17	2.17	60711A	Reconditioning drainage structures, culvert catchbasin	1.00	EACH
2.26	2.26	60711A	Reconditioning drainage structures, culvert catchbasin	1.00	EACH
2.26	2.26	60711B	Reconditioning drainage structures, culvert inlet	1.00	EACH
2.76	2.76		JCT w ith 28N06A, left		
2.82	2.82	20302	Removal of CMP, disposal method disposal method (a)	1.00	EACH
2.82	2.82	60201	24 inch pipe culvert, CMP, gage 0.064 inch-thickness, compaction method 2	34.00	FOOT
3.05	3.05		END OF PROJECT		

Road # 28N06A

BEG M.P.	END M.P.	PAY ITEM	WORK DESCRIPTION	QTY	UNIT
0.00	0.00		BEGINNING OF PROJECT		
0.00	0.45	15101	Mobilization	ALL	LUMP SUM
0.00	0.45	62510	Seeding, dry method	1.12	ACRE
0.00	0.45	62515	Mulching, dry method	1.12	ACRE
0.11	0.11	60711B	Reconditioning drainage structures, culvert inlet	1.00	EACH
0.18	0.18	60711A	Reconditioning drainage structures, culvert catchbasin	1.00	EACH
0.40	0.40	60711B	Reconditioning drainage structures, culvert inlet	1.00	EACH
1.35	1.35		END OF PROJECT		

Road # 28N22

BEG M.P.	END M.P.	PAY ITEM	WORK DESCRIPTION	QTY	UNIT
0.00	0.00		BEGINNING OF PROJECT		
0.00	1.35	15101	Mobilization	ALL	LUMP SUM
0.00	1.35	62510	Seeding, dry method	1.12	ACRE
0.00	1.35	62515	Mulching, dry method	1.12	ACRE
0.15	0.15	60711C	Reconditioning drainage structures, rolling dip	1.00	EACH
0.32	0.32	60704	Clean Pipe	1.00	EACH
0.57	0.58	30307	Roadbed reconditioning, compaction method 2	0.01	MILE
0.77	0.77	60711C	Reconditioning drainage structures, rolling dip	1.00	EACH
0.81	0.81	60704	Clean Pipe	1	EACH
0.87	0.87	60711B	Reconditioning drainage structures, culvert inlet	1.00	EACH
0.87	0.87	60704	Clean Pipe	1.00	EACH
0.91	0.91	60711C	Reconditioning drainage structures, rolling dip	1	EACH
1.11	1.11	60711C	Reconditioning drainage structures, rolling dip	1	EACH
1.16	1.16	60704	Clean Pipe	1.00	EACH
1.22	1.22	60711B	Reconditioning drainage structures, culvert inlet	1.00	EACH
1.29	1.32	30307	Roadbed reconditioning, compaction method 2	0.03	MILE
1.35	1.35		END OF PROJECT		

Road # 29N32

BEG M.P.	END M.P.	PAY ITEM	WORK DESCRIPTION	QTY	UNIT
0.00	0.00		BEGINNING OF PROJECT		
0.00	3.05	15101	Mobilization	ALL	LUMP SUM
0.00	3.05	62510	Seeding, dry method	1.21	ACRE
0.00	3.05	62515	Mulching, dry method	1.21	ACRE
0.04	0.10	30307	Roadbed reconditioning, compaction method 2	0	MILE
0.56	0.56	60711B	Reconditioning drainage structures, culvert inlet	1.00	EACH
1.05	1.07	30307	Roadbed reconditioning, compaction method 2	0.02	MILE
1.06	1.06	30112	Aggregate surface course, grading G	10	CUBIC YARD
1.06	1.06		REFERENCE: Developed w ater source.		
1.30	1.30	60711B	Reconditioning drainage structures, culvert inlet	1	EACH
3.05	3.05		END OF PROJECT		

USDA FOREST SERVICE U.S. DEPARTMENT OF AGRICULTURE

United States Department of Agriculture
Forest Service

R5
PACIFIC SOUTHWEST

STAMPS, LOGOS, AND SEALS

NO.	REVISION / ISSUE	DATE
4		
3		
2		
1		

PROJECT NAME

PROMENADE PARK STEWARDSHIP IRSC

LASSEN NATIONAL FOREST

ALMANOR RANGER DISTRICT

DRAWING TITLE

WORKLIST

DATE 4/16/2026	ARCHIVE NO.
DESIGNER G.ZB	DRAWING SHEET NO. G-05
DRAWN G.ZB	
CHECKED T.S.	
PROJECT NO.	SHEET 005 OF 009

4/27/26 11:50 GZEPEDA\BUENROSTRO C:\USERS\GZEPEDA\BUENROSTRO\BOX\77001TRANSPORTATIONSYSTEM\PROJECTS\2026_BID\WELL PARK FIRE SALVAGE (NO BID - CANCELLED)\DRAWINGS\BID\WELL PARK FIRE SALVAGE PLANS.DWG;

ROAD STRUCTURE DETAILS

NO SCALE

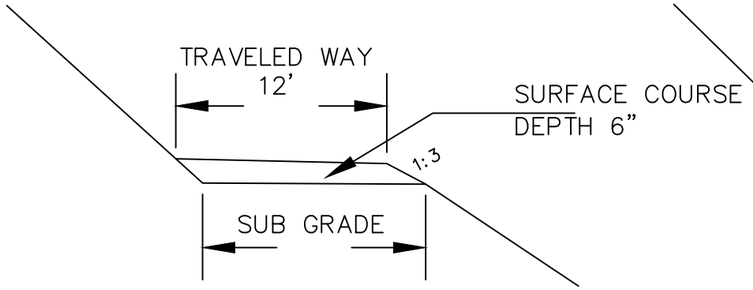

OUTSLOPE SUB GRADE
W/O DITCH, 2%–4%

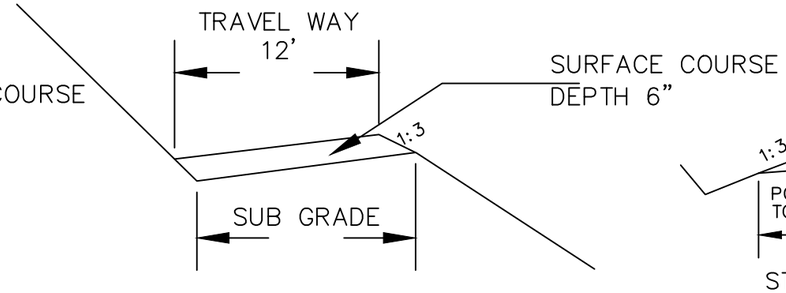

IN SLOPE SUB GRADE
W/O DITCH, 2%–4%

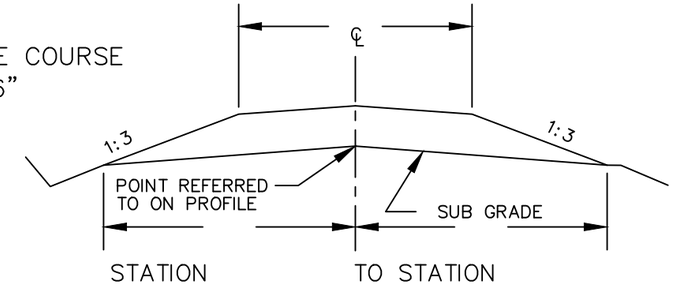

CROWNED SURFACE

TYPICAL TURNOUT SECTIONS

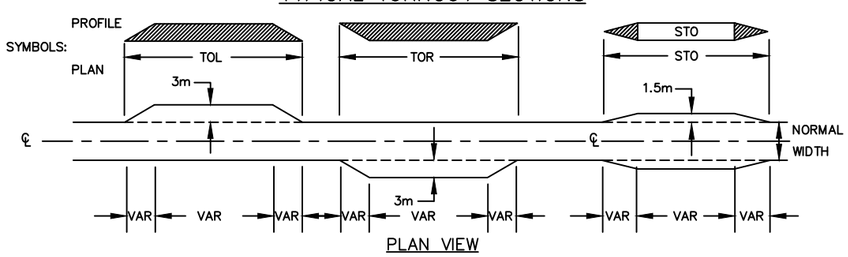

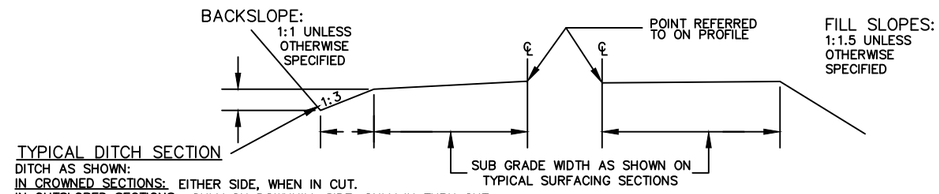

TYPICAL DITCH SECTION

DITCH AS SHOWN:
IN CROWNED SECTIONS: EITHER SIDE, WHEN IN CUT.
IN OUTSLOPED SECTIONS: ONLY ON DOWNHILL SIDE, ONLY IN THRU CUT.
IN INSLOPED SECTIONS: NO DITCH, EITHER SIDE.

TYPICAL GRADING SECTIONS

NOTES:

TRAVELLED WAY SHALL BE OUTSLOPED 2%–4% UNLESS OTHERWISE INDICATED.
CURVE WIDENING SHALL BE ADDED WHERE STAKED BY COR.
DEPTHS SHOWN ARE COMPACTED DEPTHS.

United States Department of Agriculture
Forest Service

R5
PACIFIC SOUTHWEST

STAMPS, LOGOS, AND SEALS

NO.	REVISION / ISSUE	DATE
4		
3		
2		
1		

PROJECT NAME

PROMENADE PARK STEWARDSHIP IRSC

LASSEN NATIONAL FOREST

ALMANOR RANGER DISTRICT

DRAWING TITLE

ROAD STRUCTURE DETAIL

DATE 4/16/2026	ARCHIVE NO.
DESIGNER G.ZB	DRAWING SHEET NO. C-01
DRAWN G.ZB	
CHECKED T.S.	
PROJECT NO.	SHEET 006 OF 009

4/27/26 11:50 GZEPEDA\BUENROSTRO C:\USERS\GZEPEDA\BUENROSTRO\BOX\7790\TRANSPORTATION\SYSTEM\PROJECTS\2026_BIDWELL PARK FIRE SALVAGE (NO BID - CANCELLED)\DRAWINGS\BIDWELL PARK FIRE SALVAGE PLANS.DWG;

CLEARING DETAILS

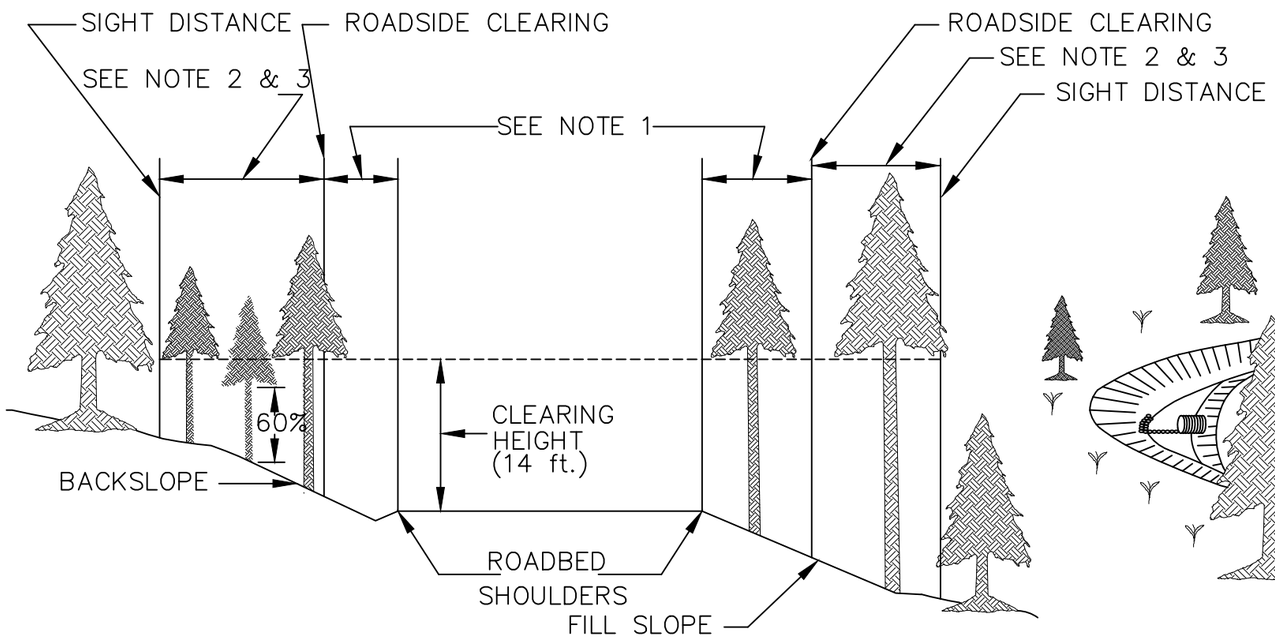

CLEARING LIMITS TYPICAL

NO SCALE

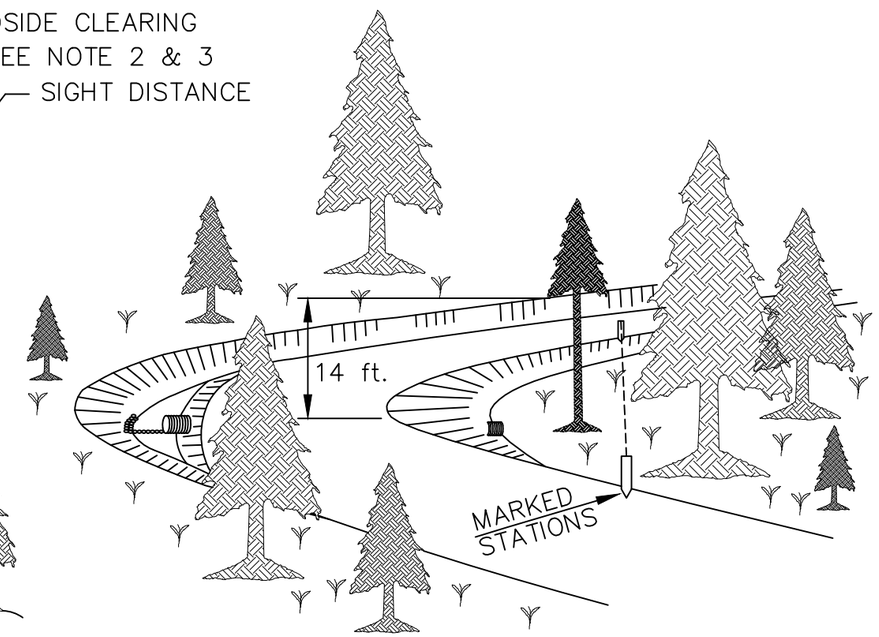

SIGHT DISTANCE TYPICAL

NO SCALE

NOTES

1. All conifers, hardwoods and brush within 2 feet of the shoulders of the road or the bottom of the ditch shall be removed.

2. The area of sight distance clearing will be from the roadside clearing limit, to a line of sight between the beginning and ending stations marked on the ground. Conifers within this area shall be thinned to approximately a 12 foot trunk spacing, except where marked with paint or flagging for removal to an alternate spacing. All hard-woods & brush within these limits, shall be removed.

3. Branches on remaining conifers shall be trimmed from ground level to a clearing height limit 14 feet above the roadbed or to a limit of 60% of the tree's height, whichever is less. Limbs of vegetation shall be cut so as to not protrude within the clearing limits.

United States Department of Agriculture
Forest Service

R5
PACIFIC SOUTHWEST

STAMPS, LOGOS, AND SEALS

NO.	REVISION / ISSUE	DATE
4		
3		
2		
1		

PROJECT NAME

PROMENADE PARK STEWARDSHIP IRSC

LASSEN NATIONAL FOREST

ALMANOR RANGER DISTRICT

DRAWING TITLE

CLEARING DETAIL

DATE 4/16/2026	ARCHIVE NO.
DESIGNER G.ZB	DRAWING SHEET NO. C-02
DRAWN G.ZB	
CHECKED T.S.	
PROJECT NO.	SHEET 007 OF 009

4/27/26 11:50 GZEPEDA:BUENROSTRO C:\USERS\GZEPEDABUENROSTRO\BOX\7790TRANSPORTATIONSYSTEM\PROJECTS\2026_BIDWELL PARK FIRE SALVAGE (NO BID - CANCELLED)\DRAWINGS\BID\WELL PARK FIRE SALVAGE PLANS.DWG;

ROLLING DIP

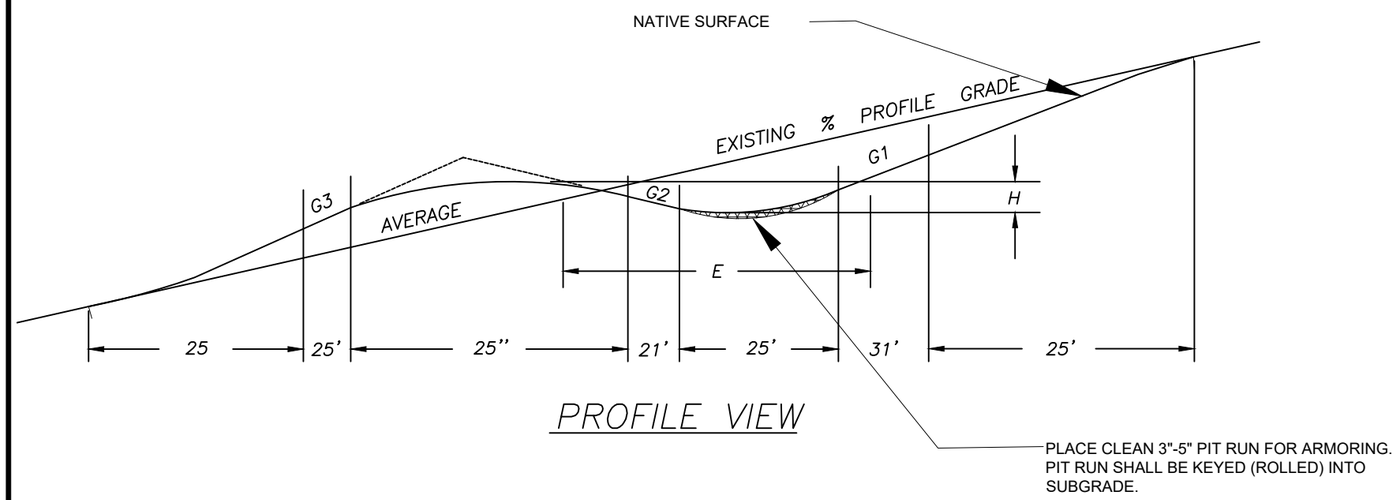

PROFILE VIEW

ROLLING DIP CONSTRUCTION DIMENSIONS						
% PROFILE GRADE	CONST. GRADE			DEPTH		
	G1	G2	G3	(H)		
0 TO 4	−7	2	−6	0.6'		
5 TO 6	−10	2	−9	0.6'		
7 TO 8	−13	2	−12	0.5'		
9 TO 10	−16	2	−15	0.5'		
OVER 10 % NOT RECOMMENDED						

OUTLET RIPRAP

WHEN SPECIFIED

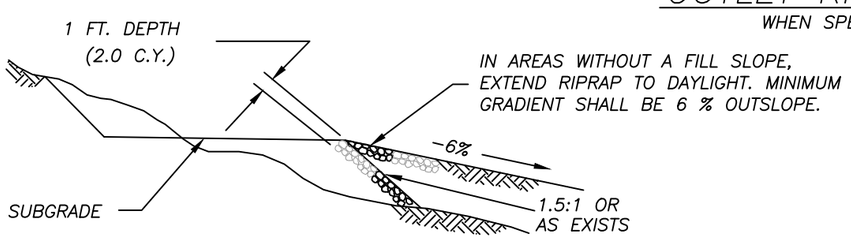

CROSS SECTION VIEW

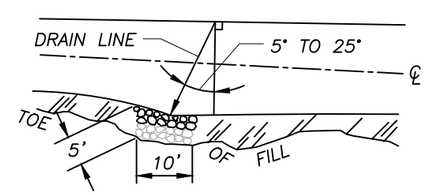

PLAN VIEW

ROLLING DIP CONSTRUCTION NOTES:

1. THE CROSS SLOPE OF THE ROADBED SHALL BE MAINTAINED THROUGH THE DIP.
2. PLACE CLASS II OUTLET RIPRAP (FSSS 705) FOR ALL DIPS. REFER TO OUTLET RIPRAP DETAIL BELOW.
3. CONSTRUCT, SHAPE, AND COMPACT ROLLING DIPS INTO SUBGRADE PRIOR TO SURFACING.

United States Department of Agriculture
Forest Service

R5
PACIFIC SOUTHWEST

STAMPS, LOGOS, AND SEALS

NO.	REVISION / ISSUE	DATE
4		
3		
2		
1		

PROJECT NAME

PROMENADE PARK STEWARDSHIP IRSC

LASSEN NATIONAL FOREST

ALMANOR RANGER DISTRICT

DRAWING TITLE

ROLLING DIP DETAIL

DATE 4/16/2026	ARCHIVE NO.
DESIGNER G.ZB	DRAWING SHEET NO. C-03
DRAWN G.ZB	
CHECKED T.S.	
PROJECT NO.	SHEET 008 OF 009

4/27/26 11:50 GZEPEDA\BUENROSTRO C:\USERS\GZEPEDA\BUENROSTRO\BOX\7790\TRANSPORTATION\SYSTEM\PROJECTS\2026_BIDWELL PARK FIRE SALVAGE (NO BID - CANCELLED)\DRAWINGS\BIDWELL PARK FIRE SALVAGE PLANS.DWG;

TYPE 3 PIPE CULVERT - G2-3

SCALE: 1" = 5'

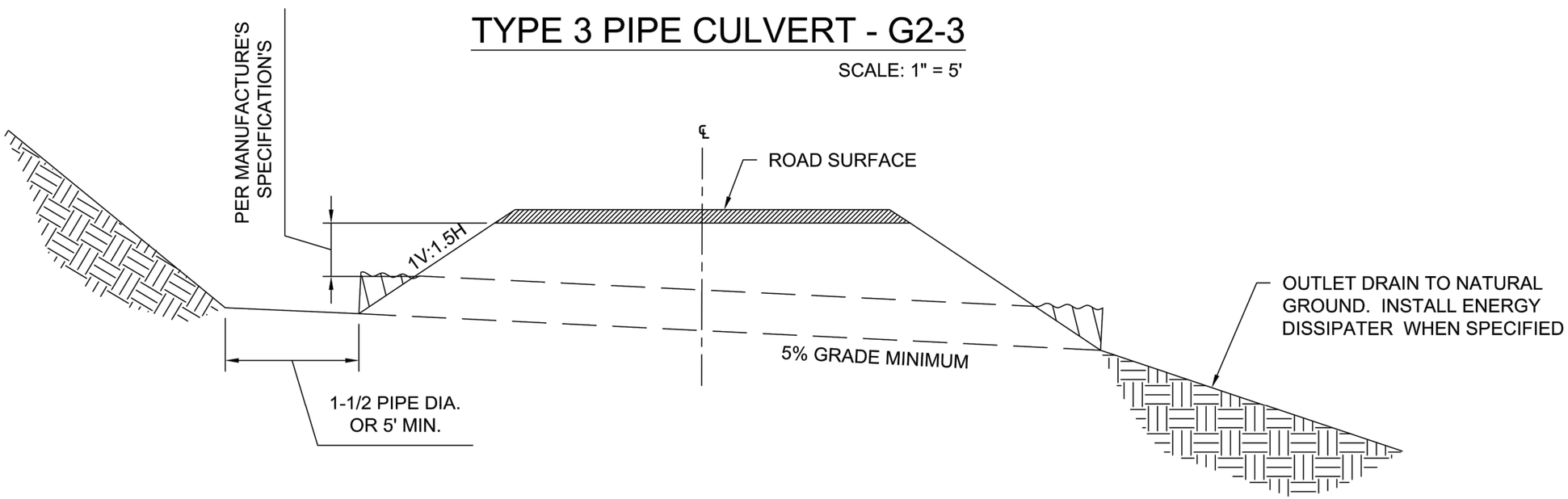

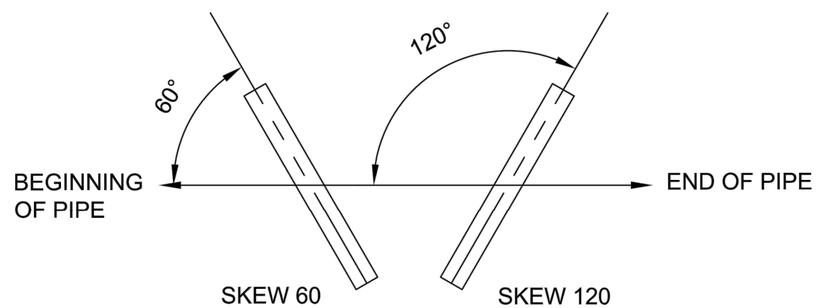

SKEW DIAGRAM

United States Department of Agriculture
Forest Service

R5
PACIFIC SOUTHWEST

STAMPS, LOGOS, AND SEALS

NO.	REVISION / ISSUE	DATE
4		
3		
2		
1		

PROJECT NAME

PROMENADE PARK STEWARDSHIP IRSC

LASSEN NATIONAL FOREST

ALMANOR RANGER DISTRICT

DRAWING TITLE

PIPE CULVERT DETAIL

DATE 4/16/2026	ARCHIVE NO.
DESIGNER G.ZB	DRAWING SHEET NO. C-04
DRAWN G.ZB	
CHECKED T.S.	
PROJECT NO.	SHEET 009 OF 009

4/27/26 11:50 G:\EPED\ABUENROSTRO C:\USERS\GZEPEDA\BUENROSTRO\BOX\7700TRANSPORTATIONSYSTEMPROJECTS\2026_BIDWELL PARK FIRE SALVAGE (NO BID - CANCELLED)\DRAWINGS\BID\WELL PARK FIRE SALVAGE PLANS.DWG;

Contents

PREFACE 2
Section 101. – TERMS, FORMAT, AND DEFINITIONS 2
Section 101. – TERMS, FORMAT, AND DEFINITIONS 2
Section 101. – TERMS, FORMAT, AND DEFINITIONS 2
Section 101. – TERMS, FORMAT, AND DEFINITIONS 3
Section 102. - BID, AWARD, AND EXECUTION OF CONTRACT 6
Section 103. – SCOPE OF WORK 6
Section 104. – CONTROL OF WORK 6
Section 104. – CONTROL OF WORK 6
Section 104. – CONTROL OF WORK 6
Section 104. – CONTROL OF WORK 6
Section 105. – CONTROL OF MATERIAL 7
Section 106. – ACCEPTANCE OF WORK 7
Section 106. – ACCEPTANCE OF WORK 7
Section 107. - LEGAL RELATIONS AND RESPONSIBILITY TO THE PUBLIC 7
Section 107. - LEGAL RELATIONS AND RESPONSIBILITY TO THE PUBLIC 7
Section 108. - PROSECUTION AND PROGRESS 8
Section 109. - MEASUREMENT AND PAYMENT 8
Section 109. - MEASUREMENT AND PAYMENT 8
Section 109. - MEASUREMENT AND PAYMENT 9
Section 155. – SCHEDULES FOR CONSTRUCTION CONTRACTS 10
Section 201. - CLEARING AND GRUBBING 10

PREFACE

Delete all but the first paragraph and add the following:

The Forest Service, US Department of Agriculture has adopted FP-24 for construction of National Forest System Roads. The Forest Service Supplemental Specifications (FSSS) shall be incorporated in the FP-24. The applicable specifications for the project will be the FP-24 as modified by the FSSS.

Section 101. – TERMS, FORMAT, AND DEFINITIONS

Add the following paragraph to Subsection 101.01 Meaning of Terms:

Delete all references to the TAR (Transportation Acquisition Regulations) in the specifications.

Section 101. – TERMS, FORMAT, AND DEFINITIONS

Add the following paragraph to Subsection 101.01 Meaning of Terms:

Delete all references to the FAR (Federal Acquisition Regulations) in the specifications when incorporating into 2400-6(T) Timber Sale or 2400-13(T) Stewardship contracts.

Section 101. – TERMS, FORMAT, AND DEFINITIONS

Add the following to Subsection 101.03 Abbreviations:

(a) Acronyms.

AGAR — Agriculture Acquisition Regulations

AFPA — American Forest and Paper Association

FSSS – Forest Service Supplemental Specifications

MSHA — Mine Safety and Health Administration

NESC — National Electrical Safety Code

WCLIB — West Coast Lumber Inspection Bureau

(d) Miscellaneous unit abbreviations.

MP - milepost	location
ppm - parts per million	volume
STA – station	location
MFBM - thousand feet board measure	volume

Section 101. – TERMS, FORMAT, AND DEFINITIONS

Make the following changes to Subsection 101.04 Definitions:

Delete these definitions and replace with the following:

Bid Schedule — The Schedule of Items.

Bridge — A structure, including supports, erected over a depression or an obstruction such as water along a road, a trail, or a railway and having a deck for carrying traffic or other loads.

Contractor — The individual or legal entity contracting with the Government for performance of prescribed work. In a timber sale contract, the contractor is the "Purchaser".

Culvert — Any structure with a bottom, regardless of fill depth, depth of invert burial, or presence of horizontal driving surface, or any bottomless (natural channel) structure with footings that will not have wheel loads in direct contact with the top of the structure.

Drawings —Design sheets or fabrication, erection, or construction details submitted to the CO by the Contractor.

Neat Line — A line defining the proposed or specified limits of an excavation or structure.

Notice to Proceed — (Public Works Contracts) Written notice to the Contractor to begin the contract work. (Timber Contracts) does not apply, replace NTP with Contract Award.

Right-of-Way — A general term denoting (1) the privilege to pass over land in some particular line (including easement, lease, permit, or license to occupy, use, or traverse public or private lands), or (2) Real property necessary for the project, including roadway, buffer areas, access, and drainage areas.

Add the following definitions:

Adjustment in Contract Price — “Equitable adjustment,” as used in the Federal Acquisition Regulations, or “construction cost adjustment,” as used in the Timber Sale Contract, as applicable.

Change — “Change” means “change order” as used in the Federal Acquisition Regulations, or “design change” as used in the Timber Sale Contract.

Forest Service — The United States of America, acting through the Forest Service, U.S. Department of Agriculture.

Forest Service Supplemental Specifications – The Forest Service uses supplemental specifications to modify the FP-24 to meet the agency needs and intents. FSSS revise the FP-24 by adding, deleting, replacing, revising, replacing part of entire sections or subsections or adding new sections to the FP..

Pioneer Road — Temporary construction access built along the route of the project.

Purchaser — The individual, partnership, joint venture, or corporation contracting with the Government under the terms of a Timber Sale Contract and acting independently or through agents, employees, or subcontractors.

Protected Streamcourse — A drainage shown on the plans or timber sale area map that requires designated mitigation measures.

Road Order — An order affecting and controlling traffic on roads under Forest Service jurisdiction. Road Orders are issued by a designated Forest Officer under the authorities of 36 CFR, part 260.

Utilization Standards — The minimum size and percent soundness of trees described in Public Works contract specifications or Timber Sale and stewardship contract provisions to determine merchantable timber.

Add Figure 101-1—Illustration of road structure terms:

Figure 101-1—Illustration of road structure terms

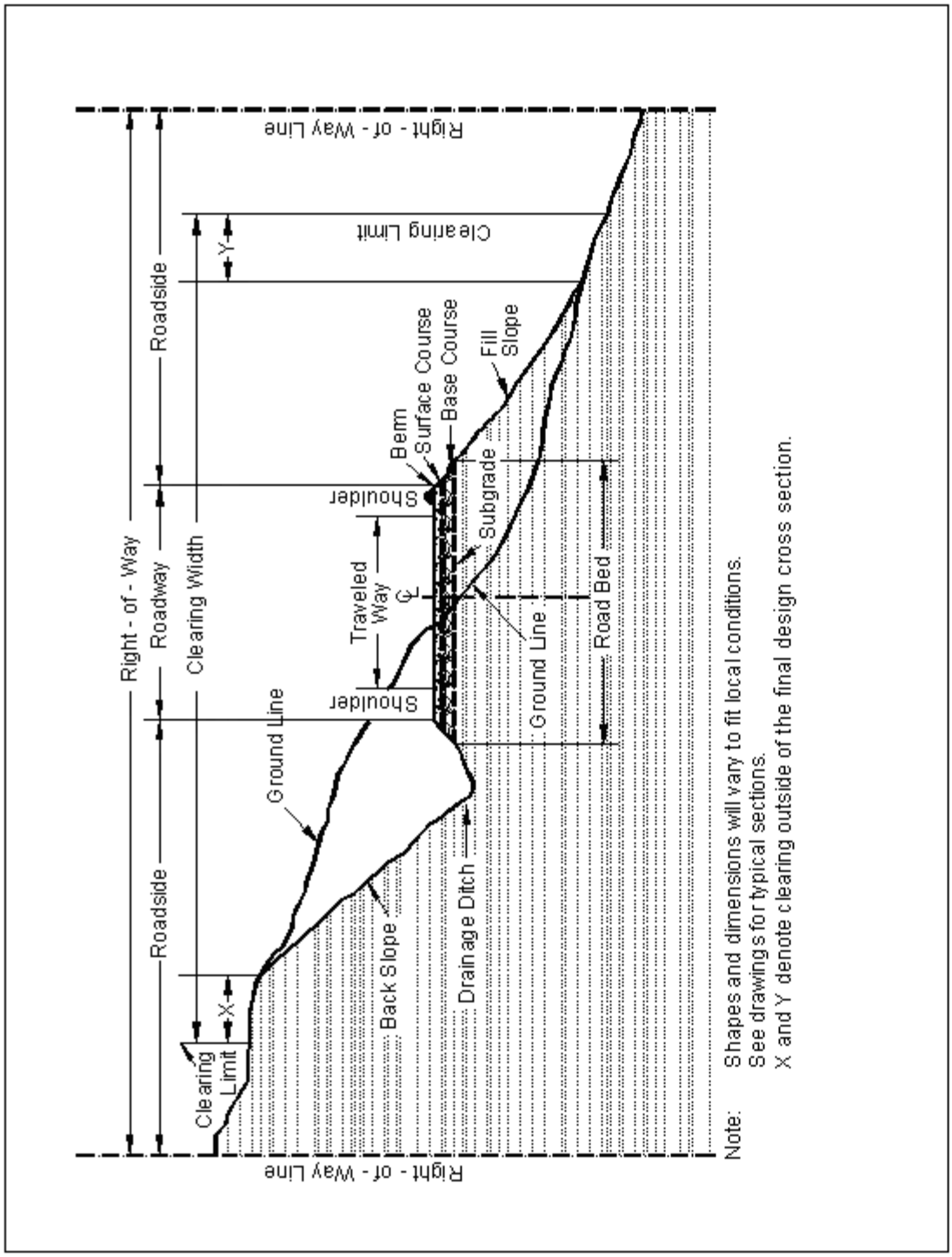

Section 102. - BID, AWARD, AND EXECUTION OF CONTRACT

Delete Section 102 Bid, Award, and Execution of Contract in its entirety.

Section 103. – SCOPE OF WORK

Delete all of Section 103 Scope of Work except Subsection 103.01 Intent of Contract.

Section 104. – CONTROL OF WORK

Delete Subsections 104.01 Authority of Contracting Officer, 104.02 Authority of Contracting Officer's Representative, 104.03 Authority of Inspectors.

Section 104. – CONTROL OF WORK

Delete Subsection 104.06 Specifications and Drawings and replace with the following:

Refer to FAR 52.236-21 Specifications and Drawings for Construction (FEB 1997).

Section 104. – CONTROL OF WORK

Delete Subsection 104.07 Coordination of Contract Documents.

Section 104. – CONTROL OF WORK

Add the following Subsection 104.12 Use of Roads by Contractor:

The Contractor is authorized to use roads under the jurisdiction of the Forest Service for all activities necessary to complete this contract, subject to the limitations and authorizations designated in the Road Order(s) or described in the contract, when such use will not damage the roads or national forest resources, and when traffic can be accommodated safely.

Section 105. – CONTROL OF MATERIAL

Delete second paragraph and subparagraphs (a) and (b) in Subsection 105.05 Use of Material Found in the Work and replace it with the following:

The right to use and process material found in the work excludes the use and processing of material for nongovernment contract work, except for the disposal of waste material. Materials produced or processed from Government lands in excess of the quantities required for performance of this contract are the property of the Government. Place excess material at government-approved agreed to location(s), at no additional cost to government.

Section 106. – ACCEPTANCE OF WORK

Delete the 3rd and 4th paragraphs in Subsection 106.01 Conformity with Contract Requirements.

Section 106. – ACCEPTANCE OF WORK

Delete Subsection 106.06 Partial and Final Acceptance.

Section 107. - LEGAL RELATIONS AND RESPONSIBILITY TO THE PUBLIC

Delete Subsection 107.05 Responsibility for Damage Claims.

Section 107. - LEGAL RELATIONS AND RESPONSIBILITY TO THE PUBLIC

Delete Subsection 107.08 Sanitation, Health, and Safety and replace with the following:

Refer to FAR 52.236-13 Accident Prevention Alternate I (NOV 1991).

Section 108. - PROSECUTION AND PROGRESS

Delete Section 108 Prosecution and Progress in its entirety.

Section 109. - MEASUREMENT AND PAYMENT

Delete Subsections 109.06 Pricing and Adjustments, 109.07 Estimated Work, 109.08 Progress Payments, and 109.09 Final Payment.

Section 109. - MEASUREMENT AND PAYMENT

Delete Table 109-1 of Subsection 109.01 Measurement of Work and replace with the following:

Table 109-1

Decimal Accuracy of Quantities for Payment

Pay Item	**Level of Precision**
Acre	0.01
Cubic Foot	1
Cubic Yard	1
Cubic Yard Exception - Structure Excavation; Sheathing; Materials; Bedding, Bed Course, and Backfill, Materials; Gabions;	0.1
Cubic Yard Exception – Concrete; Masonry	0.01
Day	1
Each	1
Gallon	1
Hour	0.1
Linear Foot	1
Linear Foot Exception - Timber, Steel, and Concrete Piles	0.1
M-Gallon	0.1
Mile	0.01
Month	0.1
Pound	1
Square Foot	0.1
Square Yard	0.1
Station	0.1
Thousand Board Feet Measure	0.01
Ton	0.1
Ton Exception - Calcium Chloride; Sodium Chloride; Hydrated Lime; Bituminous Materials; Pavements; Bed Course Materials	0.01
Week	0.1

Section 109. - MEASUREMENT AND PAYMENT

Delete Subsection 109.02(c) Measurement Terms and Definitions, Contract quantity and replace with:

(c) Contract quantity. The quantity to be paid is the quantity listed in the bid schedule. The contract quantity will be adjusted for authorized changes that affect the quantity or for errors made in computing this quantity when that error exceeds 15% or more. If there is evidence that a quantity specific as a contract quantity is incorrect by 15% or more, submit

calculations, drawings, or other evidence indicating why the quantity is in error and request in writing that the quantity be adjusted.

Section 155. – SCHEDULES FOR CONSTRUCTION CONTRACTS

Delete Section 155 Schedules for Construction Contracts in its entirety.

Section 201. - CLEARING AND GRUBBING

Delete Subsection 201.06 Disposal and replace with the following:

201.06 Disposal. Dispose of merchantable timber designated for removal according to the provisions of the timber sale contract.