Campground Furnishing Examples

The following are examples of products that will meet the intent outlined in the project scope. These products provide salient features or specifications as a guide. Products that meet these requirements will be considered acceptable.

Fire Rings:

Group site fire ring: Outdoor Creations Inc. Item: 303 – Group Firepit 6' Dia, or approved equal

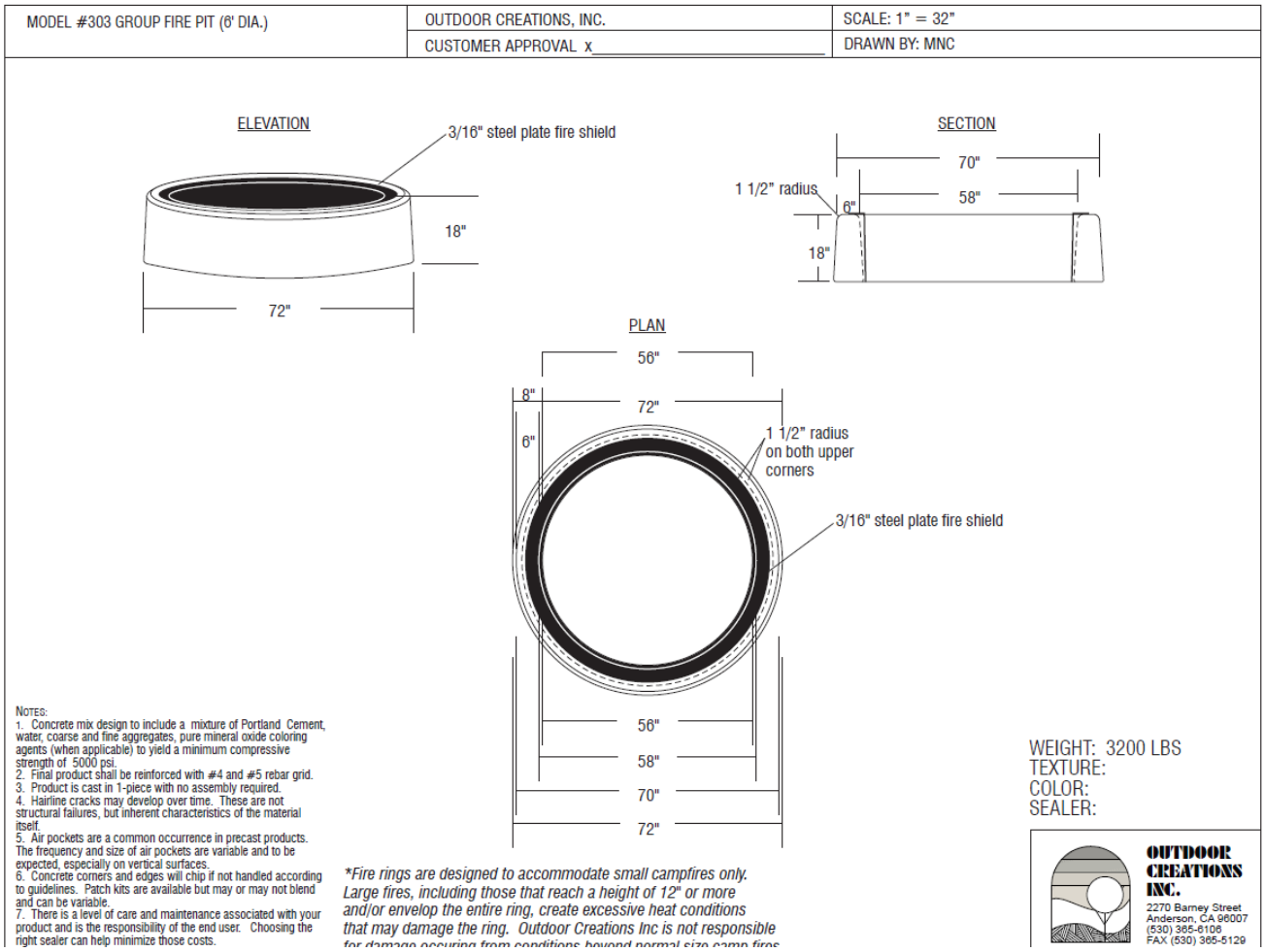

Individual campsite fire ring: Outdoor Creations Inc. Item: 304 – Group Firepit 4’ Dia, or approved equal

MODEL #304 GROUP FIRE PIT (4' DIA.)	OUTDOOR CREATIONS, INC.	SCALE: 1" = 32"
	CUSTOMER APPROVAL x_____	DRAWN BY: MNC

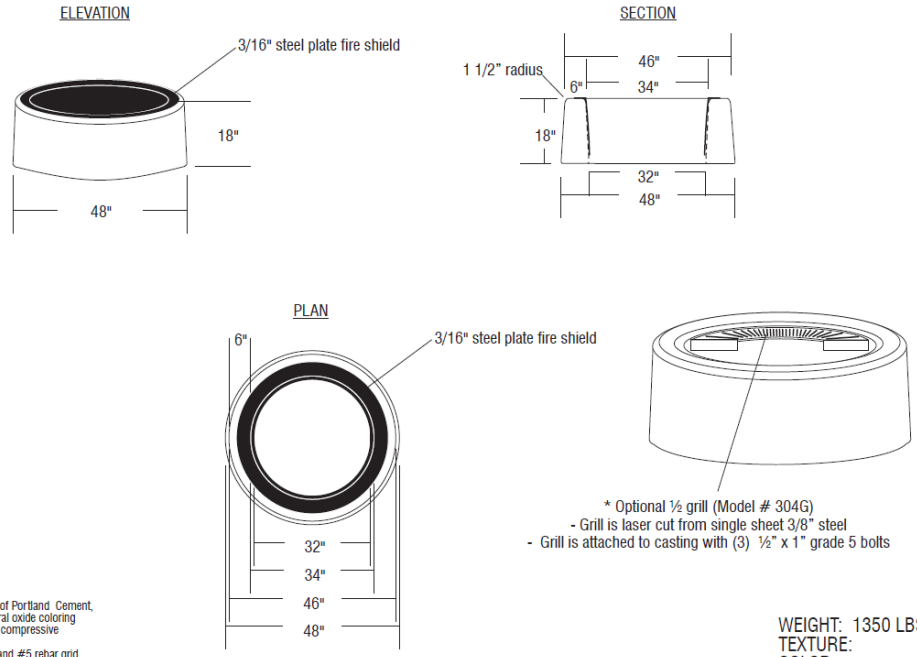

NOTES:
1. Concrete mix design to include a mixture of Portland Cement, water, coarse and fine aggregates, pure mineral oxide coloring agents (when applicable) to yield a minimum compressive strength of 5000 psi.
2. Final product shall be reinforced with #4 and #5 rebar grid.
3. Product is cast in 1-piece with no assembly required.
4. Hairline cracks may develop over time. These are not structural failures, but inherent characteristics of the material itself.
5. Air pockets are a common occurrence in precast products. The frequency and size of air pockets are variable and to be expected, especially on vertical surfaces.
6. Concrete corners and edges will chip if not handled according to guidelines. Patch kits are available but may or may not blend and can be variable.
7. There is a level of care and maintenance associated with your product and is the responsibility of the end user. Choosing the right sealer can help minimize those costs.

**Fire rings are designed to accommodate small campfires only. Large fires, including those that reach a height of 12" or more and/or envelop the entire ring, create excessive heat conditions that may damage the ring. Outdoor Creations Inc is not responsible for damage occuring from conditions beyond normal size camp fires.*

WEIGHT: 1350 LBS
TEXTURE:
COLOR:
SEALER:

OUTDOOR CREATIONS INC.
2270 Barney Street
Anderson, CA 96007
(530) 365-6106
FAX (530) 365-5129

Tables:

Picnic Table: Outdoor Creations Inc. Item:100S Concrete Picnic Table or approved equal

Note: ADA/ABA accessible tables also available under the 100S model series

MODEL #100S CONCRETE PICNIC TABLE	OUTDOOR CREATIONS, INC.	SCALE: 1" = 32"
	CUSTOMER APPROVAL x_____	DRAWN BY: MNC

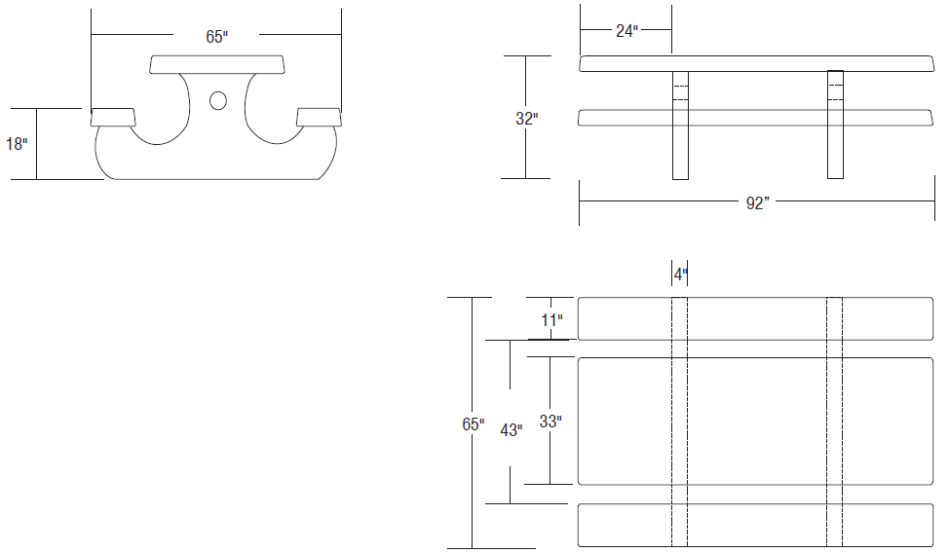

NOTES:
1. Concrete mix design to include a mixture of Portland Cement, water, coarse and fine aggregates, pure mineral oxide coloring agents (when applicable) to yield a minimum compressive strength of 5000 psi.
2. Final product shall be reinforced with #4 and #5 rebar grid.
3. Product is cast in 1-piece with no assembly required.
4. Hairline cracks may develop over time. These are not structural failures, but inherent characteristics of the material itself.
5. Air pockets are a common occurrence in precast products. The frequency and size of air pockets are variable and to be expected, especially on vertical surfaces.
6. Concrete corners and edges will chip if not handled according to guidelines. Patch kits are available but may or may not blend and can be variable.
7. There is a level of care and maintenance associated with your product and is the responsibility of the end user. Choosing the right sealer can help minimize those costs.

WEIGHT: 2450 LBS
TEXTURE:
COLOR:
SEALER:

* Wheelchair Accessibility available at both ends of table to meet A.D.A. Guidelines

OUTDOOR CREATIONS INC.
2270 Barney Street
Anderson, CA 96007
(530) 365-6106
FAX (530) 365-5129

Service Table: Outdoor Creations Inc. Item:102 – 96” Concrete Service Table or approved equal

MODEL #102 - 96" CONCRETE SERVICE TABLE	OUTDOOR CREATIONS, INC.	SCALE: 1" = 32"
	CUSTOMER APPROVAL x_____	DRAWN BY: MNC

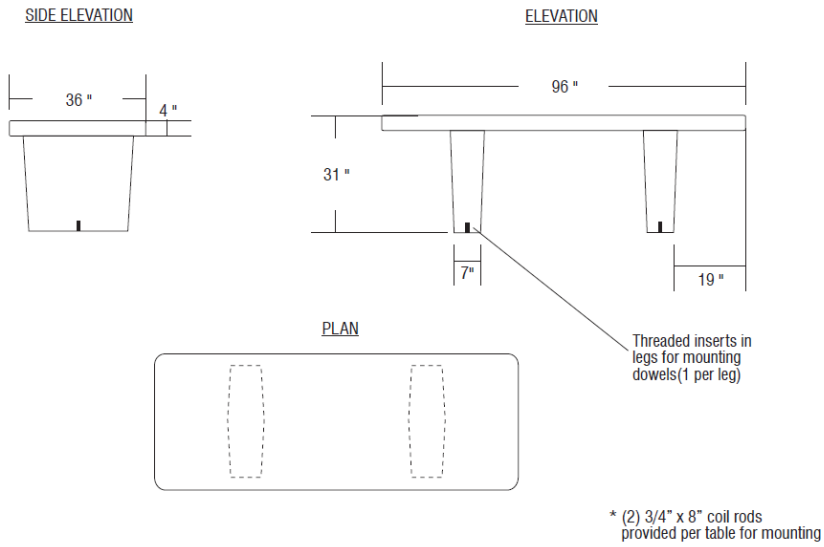

* (2) 3/4" x 8" coil rods provided per table for mounting

NOTES:
1. Concrete mix design to include a mixture of Portland Cement, water, coarse and fine aggregates, pure mineral oxide coloring agents (when applicable) to yield a minimum compressive strength of 5000 psi.
2. Final product shall be reinforced with #4 and #5 rebar grid.
3. Product is cast in 1-piece with no assembly required.
4. Hairline cracks may develop over time. These are not structural failures, but inherent characteristics of the material itself.
5. Air pockets are a common occurrence in precast products. The frequency and size of air pockets are variable and to be expected, especially on vertical surfaces.
6. Concrete corners and edges will chip if not handled according to guidelines. Patch kits are available but may or may not blend and can be variable.
7. There is a level of care and maintenance associated with your product and is the responsibility of the end user. Choosing the right sealer can help minimize those costs.

WEIGHT: 2350 LBS
TEXTURE:
COLOR:
SEALER:

OUTDOOR CREATIONS INC.
2270 Barney Street
Anderson, CA 96007
(530) 365-6106
FAX (530) 365-5129

Pavilion

Example pavilion rendering/pictures:

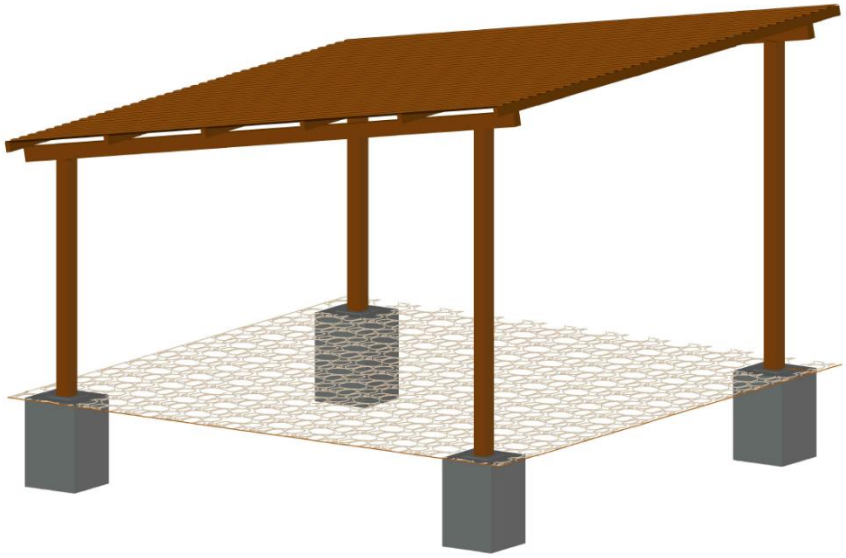

*Note: Intent of above pictures is to match architectural style. Structures are to be constructed of steel and must meet criteria outlined in the project scope.

Gas Stove Platform:

Example platform: