Program Solicitation

Radiofrequency Architectures Applying Photonic Timing and Routing (RAAPTR)

Multi X Office

DARPA-PS-26-126
June 29, 2026

OVERVIEW INFORMATION:

- **Federal Agency Name:** Defense Advanced Research Projects Agency (DARPA), Multi X Office (MXO)
- **Funding Opportunity Title:** Radiofrequency Architectures Applying Photonic Timing and Routing (RAAPTR)
- **Solicitation Type:** Initial Solicitation
- **Funding Opportunity Number:** DARPA-PS-26-126
- **Assistance Listing Number:** Not applicable
- **Dates/Time: All Times are Eastern Time Zone (ET)**
  - Posting Date: June 29, 2026
  - CUI Addendum Request Deadline: July 6, 2026, at 5:00 p.m.
  - Required Abstract Due Date: July 13, 2026, at 1:00 p.m.
  - Notification of Intent to Propose, to include eForm 60, if applicable: August 7, 2026, at 5:00 p.m.
  - Question and Answer Deadline: August 7, 2026, at 5:00 p.m.
  - Proposal Due Date: August 24, 2026, at 1:00 p.m.
  - Anticipated Oral Presentation Dates: September 2-24, 2026
  - Estimated Period of Performance Start: December 1, 2026
- **Anticipated Funding:** $58,000,000
- **Anticipated Individual Awards:** Three to five individual awards are anticipated
- **Types of Instruments That May Be Awarded:** Other Transaction (OT) for Prototype Agreements under 10 U.S.C. 4022
- **Required CMMC Level:** Level 2 (Self-Assessment) - Broad Protection of Controlled Unclassified Information (CUI)
- **NAICS Code:** 541715
- **Agency Contact:**

  The PS Coordinator for this effort may be reached at:

  RAAPTR@darpa.mil
  DARPA/MXO
  ATTN: DARPA-PS-26-126
  675 North Randolph Street
  Arlington, VA 22203-2114

Program Solicitation
DARPA-PS-26-126

Radiofrequency (RF) Architectures Applying Photonic Timing and Routing (RAAPTR)
Defense Advanced Research Projects Agency (DARPA)
Multi X Office (MXO)

Section I: Funding Opportunity Description

The Defense Advanced Research Projects Agency (DARPA) is soliciting innovative proposals to develop radiofrequency (RF) system architectures that employ and maintain optical timing precision in form factors and ruggedness traceable to compact mobile land, air, and space-based defense platforms. Proposals to the Radiofrequency Architectures Applying Photonic Timing and Routing (RAAPTR) program should investigate innovative approaches that enable revolutionary advances in vibration-hardened, ultra-low phase noise photonic oscillators; vibration-hardened, low phase noise ancillary analog and mixed-signal components; and high-performance analog and digital subsystem architectures that apply RAAPTR components to defense-relevant use cases and mission capabilities. Specifically excluded is research that advances non-optical methods of microwave generation or that results in evolutionary improvements to the existing state of practice.

A Controlled Unclassified Information (CUI) addendum provides additional details on the RAAPTR program. **Please see Attachment A of this Program Solicitation (PS) for instructions on how to request the CUI Addendum.** The Proposer must request the CUI Addendum by the deadline stated in the Overview section.

A. Background

The performance of best-in-class microwave sources fielded today, such as oven-controlled crystal oscillators (OCXO) and surface- or bulk-acoustic wave (SAW/BAW) oscillators, degrades by many orders of magnitude when subjected to challenging ambient conditions, particularly vibration. External acoustics naturally couple into the 10–100 MHz mechanical modes that OCXOs transduce into electrical outputs. Electronic multiplication stages further multiply vibration-induced noise by a factor of $\sim 10^6$ when converting to the gigahertz regime of interest for high-resolution radar and high-bandwidth electronic warfare (EW) and communications. Conventional approaches to mitigate vibration effects employ bootstrapping of multiple oscillators, active feedback, and mechanical damping or isolation, but applying these solutions requires significant added size, weight, and/or power that are not compatible with the constraints of compact, highly mobile platforms. As a result, the RF system architectures that deploy to the edge are unable to employ the precise techniques that require pure microwave frequencies.

Launched in 2022, DARPA's Generating RF with Photonics for Low Noise (GRYPHON) program sought to challenge this regime by demonstrating that optical methods of microwave generation could be achieved in highly deployable, chip-scale form factors. Such approaches take advantage of the reverse frequency scaling of OCXOs; optical frequency division converts laser frequencies of ~200 THz to the microwave domain and decreases the phase noise spectrum by as much as 10^8. The GRYPHON program showed that chip-scale photonic microwave oscillators generate microwaves with 10–100x lower noise than state-of-

the-art OCXOs depending on the offset frequency.[1,2,3] While the acceleration sensitivity of photonic microwave oscillators remains to be determined, the use of optical resonators rather than acoustic resonators as the basis of the oscillator operation suggests that novel methods of acoustic design and packaging that are not available to OCXOs may be pursued to overcome historical limitations.

The optical frequency combs (OFCs) that underpin photonic microwave oscillators are key components in multiple other record-setting optical technologies. Optical clocks developed for position, navigation, and timing (PNT) applications employ OFCs to stabilize RF frequencies to atomic references with extreme precision over timescales of hours and beyond. While the realization of compact and rugged optical clocks for tactical military platforms remains an outstanding goal, it may be possible to significantly simplify the design of optical clocks for stability over the comparably shorter timescales of RF applications ranging from seconds to tens of seconds. In this regime, OFCs are likely to be the leading contributor of size, weight, and power, and chip-scale implementations could enable their proliferation and deployment. Dual-comb techniques of time transfer further enable such stability to be distributed over long distances across a platform or between physically remote RF nodes via fiber or free-space laser links. Additional implementation of OFCs for multi-wavelength communication channels offers a path to send vast data volumes over distance. DARPA's Photonics in the Package for Extreme Scalability (PIPES) program, launched in 2019, showed that integrated photonic OFC transceivers could be co-packaged with the advanced microelectronics needed for broadband RF systems[4,5,6]. Collectively, chip-scale OFCs offer multiple breakthrough functionalities to generate and distribute pure frequencies, stable time, and high-bandwidth data across and between RF systems, with the potential for novel architectures that exploit such performance to overcome performance bottlenecks inherited from electronic timing and communication standards.

---

[1] Nakamura, T., Groman, W., Ji, QX. *et al.* Low-noise microwaves from free-running frequency combs and electrical feed-forward phase noise compensation. *Nat. Photon.* (2026). https://doi.org/10.1038/s41566-026-01905-3

Kudelin, I., Groman, W., Ji, QX. *et al.* Photonic chip-based low-noise microwave oscillator. *Nature* **627**, 534–539 (2024). https://doi.org/10.1038/s41586-024-07058-z

[2] Cheng, L., Zhao, M., He, Y., *et al.* Spiral resonator referenced low noise microwave generation via integrated optical frequency division, *Photon. Res.* **13**, 1991-1996 (2025). https://doi.org/10.1364/PRJ.562434

He, Y., Cheng, L., Wang, H., *et al*. Chip-scale high-performance photonic microwave oscillator. *Science Advances* **10**, eado9570 (2024). https://doi.org/10.1126/sciadv.ado9570

[3] Liu, L., Harrington, M. W., Sun, S., *et al.* Photonic chip-based optical frequency division with PZT-integrated soliton microcombs, *Photon. Res.* **14**, 621-625 (2026). https://doi.org/10.1364/PRJ.574352

Sun, S., Wang, B., Liu, K. *et al.* Integrated optical frequency division for microwave and mmWave generation. *Nature* **627**, 540–545 (2024). https://doi.org/10.1038/s41586-024-07057-0

[4] Hosseini, K., Kok, E., Shumarayev, S., *et al.* 8 Tbps Co-Packaged FPGA and Silicon Photonics Optical IO. *Proc OFC* Th4A,2, (2021)

Wang, Y., Wang, S., Parsons, R., *et al.* Silicon Photonics Chip I/O for Ultra High-Bandwidth and Energy-Efficient Die-to-Die Connectivity. *IEEE Custom Integrated Circuits Conference (CICC)* (2024). 10.1109/CICC60959.2024.10529018

[5] Omirzakhov, K., Hao, H., Pirmoradi, A., Aflatouni, F., Energy Efficient Monolithically Integrated 256 Gb/s Optical Transmitter With Autonomous Wavelength Stabilization in 45 nm CMOS SOI. *IEEE J. Solid-State Circuits*, **60**, 7 (2025). 10.1109/JSSC.2024.3511673

[6] Wang, Y., Wang, S., Parsons, R. *et al*. Co-designed silicon photonics chip i/o for energy-efficient petascale connectivity. *IEEE Transactions on Components, Packaging and Manufacturing Technology* (2024). *15*(8), 1581-1591. https://doi.org/10.1109/TCPMT.2024.3492189

B. Program Description

The RAAPTR program seeks to develop RF system architectures that exploit an optical timing backbone that generates and maintains low phase noise and timing deviation in form factors and ruggedness traceable to compact mobile defense platforms. The program will also study the utility of additional optical device functionality such as time transfer and high-bandwidth data movement based on proposer-identified use cases. The program will rapidly develop the required componentry and system architectures necessary to take advantage of the optical timing backbone, culminating in an on-platform demonstration.

At the component level, the program aims to demonstrate photonic microwave oscillators with:

- Phase noise < -120 dBc/Hz at 100 Hz offset[7],
- Phase noise < -150 dBc/Hz at 10 kHz offset,
- Relative timing error < 1 picosecond for 1–100 second intervals, and
- Volume < 300 cc.

While RAAPTR is specifically seeking photonic approaches to microwave generation, DARPA is open to any concept that achieves program metrics. Integrated photonics, micro-optics, and/or other chip-scale photonic device approaches are not required; however, proposals for fiber-optic solutions will be closely scrutinized during proposal review for concepts that enable overcoming their susceptibility to ambient acoustic noise.

At the system architecture level, RAAPTR aims to demonstrate not only the optical components <u>necessary</u> for such a backbone, but also the ancillary analog-RF and digital-RF capacity <u>sufficient</u> to maintain the performance provided by optics throughout the system architecture as shown in Figure 1. *Note*: while Figure 1 illustrates a potential architecture for a pulsed-Doppler radar as a representative example, other RF applications are of interest. Further, while the specific devices in Figure 1 are unchanged between the today's mixed analog-digital architectures and RAAPTR's optical architecture examples, this is for illustration purposes only, and it is highly likely that the components themselves and their arrangement may change profoundly when utilizing an optical backbone.

[7] Phase noise specified as frequency offset from a 10 GHz carrier for purposes of comparison to incumbent technologies. Actual operating frequency of oscillators and RF architectures during the program will be proposer defined based on proposed use cases.

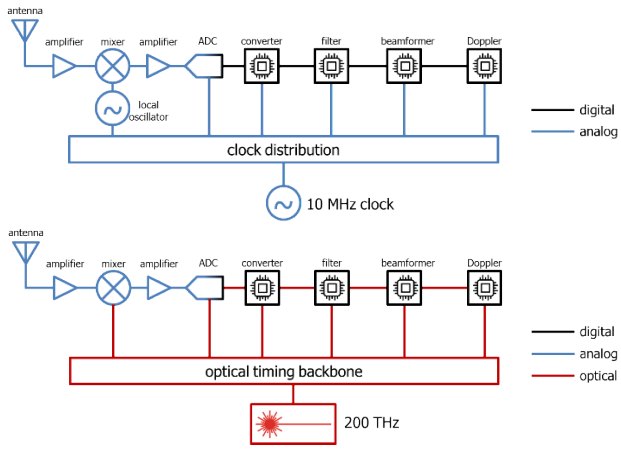

Figure 1. (Left) The analog-digital backbone of today's radar architectures distributes and converts a nominal 10 MHz reference signal from quartz crystal oscillators to the frequencies that devices use in analog and digital signal processing. (Right) Optical backbones will generate and distribute ultra-low noise signals, with the potential for high-speed data movement displacing both analog and digital electronic channels.

Optical technologies disrupt separate assumptions at the heart of RF system design, from individual devices, through system topology, to the nature of signal processing, and so the RF system architectures themselves must be developed in tandem with the component-level development to determine a path for future transition. Key objectives at the system architecture level include:

- Maintaining oscillator performance within 3 dB across a full analog-RF transceiver chain composed of ancillary components necessary to enable a proposer-defined use case[8],
- Developing the digital signal processing architectures and algorithm methods necessary to translate oscillator performance to relevant scenarios for mission partner transition, and
- Maintain performance under temperature variation -40 to 85 °C and 7.7 grms vibration, providing a path to endow the most constraining of tactical platforms with advanced RF capabilities[9].

C. Program Structure

The RAAPTR program is a two-phase, 42-month effort. Phase 1 (24 months) will focus on component development and RF system architecture design. Phase 2 (18 months) will integrate components into a brassboard prototype for platform testing under relevant environmental conditions.

Phase 1: Design, fabrication, and testing

Phase 1 component development will emphasize design, fabrication, and testing of vibration-hardened photonic oscillators that maintain ultra-low phase noise performance under environmental conditions encountered on mobile military platforms, particularly airborne platforms that feature especially strong vibration. Performers will be expected to provide early experimental validation of the proposed vibration mitigation concepts that harden individual photonic devices.

---

[8] For example, phase noise produced by amplifiers, and aperture jitter in sampling circuits may need to be reduced significantly in order to fit within the budget metric.

[9] For example, RF antennas and RF cables can suffer from significant acceleration sensitivity, which may need to be mitigated through innovative integration methods.

Hati, A. et al., IEEE Trans. Ultrasonics, Ferroelectrics, and Frequency Control, 56, 10 (2009)

Ward, J. S., IEEE Trans. Microwave Theory and Techniques, 65, 11 (2017)

Additional component-level activity in Phase 1 will identify, and develop where necessary, the ancillary analog and mixed-signal components (e.g., RF mixers, amplifiers, and digitizers) of an RF transceiver chain to limit the total system-level phase noise and timing deviation across a full RF transceiver chain to within 3 dB of the oscillator performance. Performers will be required to identify the cross-over points where ancillary components will prevent RF systems from achieving operation limited by oscillator performance. As such, analog component noise reduction will be pursued early in Phase 1, including functional tests on componentry integrated with unpackaged oscillators to confirm noise sources. Environmental hardening of ancillary analog components will similarly be necessary such that they can be integrated into a hardened breadboard prototype for laboratory testing under relevant environmental conditions.

An architecture-centric effort during Phase 1 will design high-performance analog and digital subsystems that apply RAAPTR components towards performer-identified use cases spanning a wide range of RF signal processing applications, including but not limited to radar, signal direction finding, communications, and EW. Of particular interest to DARPA are architectural concepts that uniquely leverage photonics not only for the oscillator, but as a backbone for the architecture, to exercise optical functions such as low-noise frequency synthesizers, stable clocks, time-and-frequency distribution/synchronization, high-bandwidth data transfer, and high-efficiency digital algorithms exploiting high-rate data movement. Such functions intersect in different ways with different use cases, and proposers are encouraged to select which capabilities to apply to the use cases and scenario categories of interest enumerated in the RAAPTR CUI Addendum. Proposed architectures and their guiding use cases will be evaluated based on their ability to utilize optical devices to overcome known capability gaps inherited from legacy electronic devices.

Phase 2: Integration

Phase 2 will focus on integrating the ruggedized photonic, analog RF, and digital RF components into a brassboard prototype. Noise- and timing-performance testing will be conducted on a Government-furnished airborne platform to verify system operation commensurate with the RAAPTR program metrics. While further system integration and functional testing (e.g., as a photonically enabled radar) is not expected to be solicited initially, DARPA intends to use the transition from Phase 1 to Phase 2 to finalize the application space of the technology, with the potential for added work based on the architectural designs developed in Phase 1. Relative to the Phase 1 breadboard prototype that undergoes laboratory testing, the Phase 2 brassboard prototype is expected to be more mature, with well-defined inputs and outputs, as well as a rugged and transportable form factor, such that it can survive and undergo testing by third-party engineers in uncontrolled environments.

While the program will not require a specific performer team structure, DARPA strongly prefers that prime proposers lead the architectural, integration, testing, and system analysis tasking, with flow-down requirements on photonic oscillator, analog-RF, and digital-RF component development to team members with those capabilities (e.g., subcontractors or key personnel within the prime organization). Attachment J, the RAAPTR CUI Guide, designates the designs and implementation of vibration-hardened photonic oscillators as CUI, along with the development of corresponding RF architectures and use cases. While the program baseline will operate under CUI controls, the CUI Guide formally establishes the delineated bounds for fundamental research. Program metrics will be evaluated continuously through the program at different levels of development, from simulation, component performance and environmental sensitivity testing, integrated subsystem performance and sensitivity testing, through integrated system testing. Oscillator metrics must be met under the environmental conditions specified in Table 1 by the end of Phase 1. Separately, the ancillary RF components to support the architecture design must be integrated into a breadboard prototype and achieve the architecture metrics under the environmental conditions specified in the table by the end of Phase 1. Further integration of the oscillator and ancillary RF components into a brassboard prototype will be required to meet all program metrics during an on-platform test by the end of Phase 2.

Table 1. Program Metrics

Category	Metric	Value
Oscillator	Phase Noise at 100 Hz*	-120 dBc/Hz
	Phase Noise at 10 kHz*	-150 dBc/Hz
	Output Frequency	Selectable within 1–40 GHz
	Timing Deviation from 1 to 100 seconds	1 ps
	Output Power	Proposer Defined
	Volume**	300 cc
	Power Consumption	Not to exceed 20 W
Architecture	Phase Noise and Timing Budget***	3 dB
	Performance Attributes	Proposer Defined
Environment	Vibration****	MIL-STD-883-2, Method 2026, Test Condition I/B
	Temperature****	-40 to 85 °C

** Phase noise metrics are defined at the specified offset frequency from a 10 GHz carrier frequency. Proposals to operate at other output frequencies within the 1–40 GHz band must scale the phase noise metric by 20log(f/10) dB, where f is the output frequency in GHz.*

*** The oscillator volume metric includes all optoelectronic components necessary to operate the oscillator, such as pump lasers and photodetectors. Control electronics may be implemented in printed circuit boards that do not contribute to the volume metric in Phase 1, but they must be integrated into the volume metric in Phase 2.*

**** The noise and timing budget metric requires that at any point of the analog RF system, phase noise and timing deviation do not exceed 3 dB of the oscillator output performance. Architecture metrics must be met under the environmental conditions specified in the table in an integrated breadboard in Phase 1.*

***** Vibration profile and temperature range for Phase 1 laboratory testing are intended to demonstrate generalizability and broad applicability of RAAPTR hardware, and may exceed the conditions exercised in Phase 2 testing or the proposed use cases and host platforms.*

D. Schedule, Milestones, and Deliverables

A summary of the required program milestones and deliverable by phase is presented in Table 2 and Table 3 (also listed in **Attachment I: Schedule of Milestones and Payments)**. All submitted proposals must adhere to the milestone and payment schedule specified in this attachment. Payment allocation percentages are provided as a guide; proposers may adjust the outlined payment allocations provided sufficient justification is included for the changes. Within reason, additional milestones may be proposed based on the proposed technical management plan. For planning and budgetary purposes, proposers should assume a program start date of December 1, 2026.

Table 2. Phase 1 Program Milestones and Deliverables

Milestone	Due Date (months after award)	Deliverables/Exit Criteria	Milestone Payment Allocation**
MS-1: Kickoff	1	**Deliverables:** • Presentation at the Program Kickoff Meeting, to include an overview of the project and a Baseline Integrated Master Schedule (IMS) for Phase 1. **Exit Criteria:** • Kickoff meeting attendance and key hardware purchases plan completed	10%
MS-2: Revised Designs	3	**Deliverables:** • Presentation of the revised designs at the Quarterly Program Review meeting **Exit Criteria:** • Revised oscillator and analog design completed	5%

MS-3: Simulation Results	6	**Deliverables:** • Presentation of the simulation results and interface requirements at the Quarterly Program Review meeting **Exit Criteria:** • Oscillator design traceability to metrics in simulation and expected interface requirements between subcomponents established	10%
MS-4: Internal Devices Procurement	9	**Deliverables:** • Presentation on development status at the Quarterly Program Review meeting **Exit Criteria:** • Procurement completed for internal oscillator devices • Updated IMS for Phase 1 incorporating key procurement delivery dates • Test condition flow down requirements defined	10%
MS-5: Characterization and Initial Architecture Design	12	**Deliverables:** • Presentation of results and initial architecture design at Quarterly Program Review meeting **Exit Criteria:** • Internal oscillator devices characterized for vibration sensitivity • Ancillary analog-RF components characterized for phase noise performance • Initial architecture design completed with full use case flow-down requirements	20%
MS-6: Unpackaged Functional Test	15	**Deliverables:** • Presentation of results and initial architecture design at Quarterly Program Review meeting **Exit Criteria:** • Un-packaged oscillator functional test	10%
MS-7: Integrated Breadboard and Brassboard PDR	18	Deliverables: • Presentation of Preliminary Design Review (PDR) and development status at Quarterly Program Review meeting • Brassboard PDR package Exit Criteria: • Un-packaged oscillator and analog signal chain functional on integrated breadboard • PDR of Phase 2 brassboard prototype	**5**%
MS-8: Packaged Function Test	21	**Deliverables:** • Presentation of test results and development status at the Quarterly Program Review meeting **Exit Criteria:** • Packaged oscillator functional test	10%
MS-9: Interim Design Review and Environmental Characterization	24	**Deliverables:** • Presentation of test results and development status at Metrics Review meeting • Delivery of one (1) packaged oscillator prototype Brassboard Interim Design Review package **Exit Criteria:** • Packaged oscillator prototype delivered and characterized under relevant environmental conditions	20%

		in lab • Integrated analog sub-system characterized under relevant environmental conditions in lab • Interim design review and IMS for Phase 2 brassboard prototype development • Final architecture design for Phase 2 flight test • Initial design review for use-driven system concept and budget plan for functional demonstration concept*	

*System integration and functional testing (e.g., as a photonically- enabled radar) milestones and deliverables are intentionally not included in this solicitation. DARPA intends to use the transition from Phase 1 to Phase 2 to finalize the application space of the technology, with the potential for added work based on the architectural designs developed in Phase 1.
**Use as guidance for an approximate allocation of funds in Phase 1.

Table 3. Phase 2 Program Milestones and Deliverables*

Milestone	Due Date (months after award)	Deliverables/Exit Criteria	Milestone Payment Allocation**
MS-10: Breadboard Integration	27	**Deliverables:** • Presentation of test results and development status at the Quarterly Program Review meeting **Exit Criteria:** • Breadboard integration of oscillator and analog subsystem and functional test	15%
MS-11: Brassboard CDR	30	**Deliverables:** • Brassboard Critical Design Review (CDR) package • CDR presentation at the Quarterly Program Review meeting **Exit Criteria:** • CDR of brassboard prototype	10%
MS-12: Integrated Brassboard Functional Test	33	**Deliverables:** • Functional test results of the integrated brassboard • Presentation of test results and development status at the Quarterly Program Review meeting **Exit Criteria:** • Integrated brassboard functional test	20%
MS-13: Integrated Brassboard Environmental Lab Test	36	**Deliverables:** • Presentation of test results and development status at the Quarterly Program Review meeting **Exit Criteria:** • Integrated brassboard test under relevant environmental conditions in lab	20%
MS-14: Test Readiness Review	39	**Deliverables:** • Brassboard Test Readiness Review (TRR) package • TRR presentation at the Quarterly Program Review meeting **Exit Criteria:** • TRR and delivery of brassboard prototype completed	15%
MS-15: Flight Test	42	**Deliverables:** • Integrated brassboard prototype in flight test-ready box with Government-specified test access points • On-site support for flight test preparation and troubleshooting **Exit Criteria:** • Strap-down flight test of brassboard on Government-furnished test platform	20%

*System integration and functional testing (e.g., as a photonically-enabled radar) milestones and deliverables are intentionally not included in this solicitation. DARPA intends to use the transition from Phase 1 to Phase 2 to finalize the application space of the technology, with the potential for added work based on the architectural designs developed in Phase 1.
**Use as guidance for an approximate allocation of funds in Phase 2.

All proposals must include the following meetings and travel in the proposed schedule and costs:

- To disseminate program developments, a two-day Principal Investigator (PI) meeting will be held approximately every six months, with locations split between the East and West Coasts of the United States. For budgeting purposes, plan for 8 one-day meetings over the course of 42 months: 4 meetings in the Washington, D.C., area and 4 meetings in the San Francisco, CA, area.

- Regular teleconference meetings will be scheduled with the Government team for progress reporting as well as problem identification and mitigation. Proposers should also anticipate at least one site visit per phase by the DARPA program manager during which they will have the opportunity to demonstrate progress towards agreed-upon milestones.

E. Government-Furnished Equipment/Property/Information

It is anticipated that the Jet Propulsion Laboratory and the Precision Photonic Synthesis Group in NIST's Time and Frequency Division will provide information, analysis, and support on vibration-hardened optical reference cavities and photonic microwave generation techniques. By month 6, a Government-reference design for a vibration-hardened, chip-scale optical reference cavity is anticipated to be tested, and the Government team will furnish design details and test data to performers.

Final noise-performance testing will be conducted at a Government test facility on a Government-furnished airborne platform at the end of Phase 2. The Government team will coordinate and execute the test event. Performers will be provided with the information necessary to prepare for the test event. All test data will be collected and post processed by the Government team.

F. Intellectual Property

The Government requires no less than Government Purpose Rights (GPR) to Data developed under the program. For Data or IP developed prior to the start of the agreement that will be utilized during program activities and delivered to the Government, proposers should clearly identify the Data or IP, the deliverable associated with the Data or IP, and the anticipated rights that will be given to the Government. Proposers must also identify any other IP restrictions, such as prior work, anticipated license restrictions, patents, etc., that may impact the Government's ability to transition the technology. For any such items, proposers should identify methods and mitigations that would enable the Government to integrate RAAPTR technology into future defense systems.

For the purposes of this PS, the following definitions apply:

- **"Data"** refers to recorded information, regardless of form or method of recording, which includes but is not limited to, technical data, software, mask works, and trade secrets. The term does not include financial, administrative, cost, pricing, or management information and does not include inventions.
- **"Government Purpose"** means any activity in which the United States Government is a party, including cooperative agreements with international or multi-national defense organizations, or sales or transfers by the United States Government to foreign governments or international organizations. Government purposes do not include the right to use, modify, reproduce, release, perform, display, or disclose technical data for commercial purposes or authorize others to do so.
- **"Government Purpose Rights"** means the rights to use, duplicate, or disclose Data, in whole or in part and in any manner, for Government Purposes only, and to have or permit others to do so for Government Purposes only.

Section II: Evaluation Criteria

Proposals will be evaluated using the following criteria listed in ***descending order of importance***: Overall Scientific and Technical Merit; Potential Contribution and Relevance to the DARPA Mission; and Budget and Price.

- **Overall Scientific and Technical Merit:** The proposed technical approach is innovative, feasible, achievable, and complete. The proposed technical team has the expertise and experience to accomplish the proposed tasks. Task descriptions and associated technical elements provided are complete and in a logical sequence with all proposed deliverables clearly defined such that a final outcome that achieves the goal can be expected as a result of award. The proposal identifies major technical risks, and planned mitigation efforts are clearly defined and feasible. The proposed management structure is clear, including defined roles, responsibilities, communication pathways, accountability mechanisms, and decision-making authority across the entire performer team. The Government may negatively evaluate any proposal that demonstrates unrealistic assumptions regarding subcontractor availability, staffing, technical capability, or performance, and weak, undefined, or unrealistic subcontractor management controls or oversight mechanisms.
- **Potential Contribution and Relevance to the DARPA Mission:** The potential contributions of the proposed effort bolster the national security technology base and support DARPA's mission to make pivotal early technology investments that create or prevent technological surprise. The proposed intellectual property restrictions (if any) will not significantly impact the Government's ability to transition the technology.
- **Budget and Price:** The proposed solution is realistic and affordable. The budget is realistic and accurately reflects the technical goals and objectives of the solicitation and reflects a sufficient understanding of the level of effort and staffing needed to successfully accomplish the proposed technical approach. The milestone cost is appropriately apportioned according to the Government expectations in **Attachment I: Schedule of Milestones and Payments**. For efforts with a likelihood of commercial application, appropriate direct cost sharing may be a positive factor in the evaluation.

Section III: Submission Information

A. Award Detail

This Program Solicitation (PS) may result in the award of Other Transaction (OT) for Prototype agreements, which can include not only commercially available technologies fueled by commercial or strategic investment, but also concept demonstrations, pilots, and agile development activities that can incrementally improve commercial technologies, existing Government-owned capabilities, and/or concepts for broad defense and/or public application(s). Follow-on production contracts or transactions may also be awarded pursuant to 10 U.S.C. § 4022. The OT agreement will not require cost sharing unless the offeror is a traditional defense contractor who is not working with a nontraditional defense contractor participating in the program to a significant extent. The following websites are incorporated by reference and contain additional information regarding overall proposer instructions, general terms and conditions, and Other Transactions for Prototype.

- Proposer Instructions and General Terms and Conditions: Proposer Instructions and General Terms and Conditions
- Other Transaction agreements: Proposer Instructions: Other Transactions

B. Submission Information

1. Abstract Submissions

Submission of an abstract is required to be eligible to submit a full proposal. Abstracts must be submitted no later than the due date and time stated in the Overview section and must conform to the instructions and templates in **Attachment B**. For additional guidance, see Section V: Special Considerations.

2. Notification of Intent to Propose

Proposers must submit a notification of intent to propose by the due date and time stated in the Overview section to support scheduling of virtual oral presentations. Failure to do so may place your team at a significant administrative disadvantage and result in lower scheduling priority and delays in the evaluation process.

Notifications of intent to propose must be submitted by email to RAAPTR@darpa.mil and include:

- Statement of intent to propose.
- Abstract control number.
- Prime organization and their Principal Investigators (PI) and Co-Principal Investigators (Co-PIs).
- Subcontractor organizations and their PIs and Co-PIs.
- Statement indicating which Key Personnel (prime and subcontractor PIs and Co-PIs) or oral presentation attendees have submitted a DARPA eForm 60.
    - **Any Key Personnel or individual participating in the virtual oral presentation who is a U.S. Permanent Resident (i.e., Green Card holder) or foreign national must submit a DARPA eForm 60** no later than the notification of intent due date via https://dtsn.darpa.mil/eform60/. **Failure to submit may result in denial of participation in the oral presentation or the program.**
    - **The prime is responsible for ensuring all personnel, including sub-awardees, comply with these requirements.**

3. Proposal Submissions

Full proposals are due no later than the due date and time stated in the Overview section. **Attachments C, D, E, F, G, H, and I** contain specific instructions and templates and constitute a full proposal submission. For instructions and guidance on submitting proposals, see Section V: Special Considerations. Please visit Proposer Instructions and General Terms and Conditions and see Attachment L for specific information regarding submission methods through the Broad Agency Announcement Tool (BAAT).

DARPA is interested in whether, and to what extent, proposers are using artificial intelligence (AI) tools to contribute to Volume 1 of proposals submitted in response to DARPA solicitations. Therefore, proposers must answer the following questions on the cover sheet of Volume 1 of this solicitation:

- Did you use AI tools to assist in preparing this proposal?
- If yes, what tools did you employ?

Any content in Volume 1 that utilized an AI tool to generate information, assist in technical understanding, or guide the technical work should have a citation and a corresponding reference in the Bibliography section of Volume 1. The citation should specify the tool, content, and purpose. For example, "[AI tool] was used to understand existing state of the art in manufacturing."

NOTE – THIS INFORMATION WILL NOT BE USED FOR EVALUATION PURPOSES. Proposals will be evaluated in accordance with the Evaluation Criteria outlined in the solicitation regardless of whether AI tools were employed.

4. Oral Proposal Presentation

Pre-recorded presentations, videos, voice recordings, narrated slide decks, or other prerecorded media are not permitted. Additional oral proposal presentation guidance is available in Attachment D.

5. PS Attachments:

- **Attachment A:** RAAPTR CUI Materials Request Form
- **Attachment B:** Abstract Instructions and Template
- **Attachment C:** Proposal Summary Slide Template
- **Attachment D:** Proposal Instructions and Volume I Template (Technical and Management)
- **Attachment E:** Proposal Instructions and Volume II Template (Price)
- **Attachment F:** DARPA Price Summary Spreadsheet
- **Attachment G:** Other Transaction Certification Template
- **Attachment H:** Task Description Document (TDD) Template
- **Attachment I:** Schedule of Milestones and Payments
- **Attachment J:** RAAPTR Controlled Unclassified Information (CUI) Guide signed June 23, 2026
- **Attachment K (informational):** Model Other Transaction for Prototype
- **Attachment L (informational):** DARPA BAAT Submission Portal Guide

C. Submission Correspondence

All technical, contractual, and administrative questions regarding this notice must be emailed to RAAPTR@darpa.mil. Emails sent directly to the Program Manager or any other address may result in delayed or no response. All questions must be in English and must include the sender's name, email address, and telephone number of a point of contact. DARPA will attempt to answer all questions in a timely manner and post an FAQ list on the DARPA/MXO Opportunities page at (https://www.darpa.mil/research/programs/raaptr). The list will be updated on an ongoing basis until two weeks prior to the proposal due date.

Section IV: Security Information

A. General Information

This program is subject to **Attachment J: RAAPTR Controlled Unclassified Information (CUI) Guide** signed June 23, 2026. All individuals accessing CUI agree to protect CUI in accordance with *DoD Instruction 5200.48 CONTROLLED UNCLASSIFIED INFORMATION (CUI)* and *NIST Special Publication 800-171 Protecting Controlled Unclassified Information in Nonfederal Systems and Organizations*.

B. Unclassified Submission Requirements

Proposers are responsible for preventing the inclusion of any CUI in proposals marked as Unclassified. This responsibility includes ensuring that unauthorized personnel and non-accredited information systems are not used in the preparation of the proposal.

C. CUI Proposal Marking

If an unclassified submission contains CUI or the suspicion of such, as defined by Executive Order 13556 and 32 CFR Part 2002, the information must be appropriately and conspicuously marked CUI in accordance with DoDI 5200.48. Identification of what is CUI about this DARPA program will be detailed in **Attachment J**.

D. CUI Submission Requirements

For unclassified proposals containing CUI, applicants will ensure personnel and information systems processing CUI are in accordance with DoDI 5200.48 and NIST SP 800-171 Rev 2.

Unclassified submissions containing CUI may be submitted via DARPA's BAA website (https://baa.darpa.mil) in accordance with Section III and Section V of this PS.

E. Classified Submissions

DARPA anticipates that submissions received under this PS will be at least CUI. However, should a proposer wish to submit classified information, an unclassified email must be sent to RAAPTR@darpa.mil notifying the MXO Program Security Officer.

Security classification guidance and direction via a Security Classification Guide (SCG) and/or DD Form 254, "DoD Contract Security Classification Specification," will not be provided at this time. If a determination is made that the award instrument may result in access to classified information, an SCG and/or DD Form 254 will be issued by DARPA and attached as part of the award.

Performers who wish to propose classified solutions should contact RAAPTR@darpa.mil for further instructions. Included within the request to share classified information should be, if possible, the level of information, information owner, disposition system, and a point of contact for further instructions.

Section V: Special Considerations

A. General Information

This solicitation, stated attachments, and websites incorporated by reference constitute the entire solicitation. **In the event of a discrepancy between the solicitation, attachments, or websites, the solicitation shall take precedence.**

B. Submission Guidance

Abstracts and proposals must be submitted through the Broad Agency Announcement Tool (BAAT) at https://baa.darpa.mil. Instructions for BAAT account creation are provided in Attachment L. Note that accounts are disabled after a period of 30 days of inactivity (i.e., not logging in). Email submissions will not be considered. Proposers are encouraged to submit at least 48 hours prior to the due date. Late submissions will not be accepted.

C. Eligibility

- All responsible sources capable of satisfying the Government's needs, including both U.S. and non-U.S. sources, may submit a proposal that shall be considered by DARPA. Historically Black Colleges and Universities, Small Businesses, Small Disadvantaged Businesses and Minority Institutions are encouraged to submit proposals and join others in submitting proposals; however, no portion of this solicitation will be set aside for these organizations' participation due to the impracticality of reserving discrete or severable areas of this research for exclusive competition among these entities. Non-U.S. organizations and/or individuals may participate to the extent that such participants comply with any necessary nondisclosure agreements, security regulations, export control laws, and other governing statutes applicable under the circumstances. Foreign partners must comply with the International Traffic in Arms Regulations (ITAR) and the Export Administration Regulations (EAR) if applicable to the technology area.
- DARPA encourages technical solutions from all responsible sources capable of satisfying the Government's needs. To ensure fair competition across the ecosystem, DARPA prohibits contractors/performers from concurrently providing Systems Engineering Technical Assistance (SETA), Advisory and Assistance Services (A&AS), or similar support services to DARPA and being a technical performer, unless the DARPA Deputy Director grants a written waiver.
- Federally Funded Research and Development Centers (FFRDCs), University Affiliated Research Centers (UARCs), and Government Entities to include National Laboratories are not eligible to propose to this solicitation.
- Only submissions from organizations, identified by a unique CAGE code, that have requested and been provided the RAAPTR CUI Addendum will be considered. The CUI Addendum contains CUI and will be released only upon completion of the required access forms and verification of applicable security requirements. Proposals from organizations not provided the CUI Addendum will not be considered.
- Only proposals from organizations, identified by a unique CAGE code, that submitted a timely, compliant abstract in accordance with this solicitation will be considered
- See Section V.D: Cybersecurity Maturity Model Certification Requirements below for conditions regarding eligibility for award.

D. Cybersecurity Maturity Model Certification Requirements

The Cybersecurity Maturity Model Certification (CMMC) Program, established in 32 CFR Part 170, applies to the protection of Federal Contract Information (FCI) and Controlled Unclassified Information (CUI) processed, stored, or transmitted on performer information systems.

The required CMMC level for this solicitation is **Level 2 (Self)**.

To be eligible for award under this solicitation, the CAGE code associated with the proposal must have a valid, unexpired Final Level 2 CMMC status recorded in the Supplier Performance Risk System (SPRS). Additionally, the proposer must have a current annual CMMC affirmation submitted by an authorized Affirming Official and recorded in SPRS.

Note: SPRS is accessed through the Procurement Integrated Enterprise Environment (PIEE). See SPRS FAQs and SPRS-CMMC Reference Materials for additional information.

E. Research Type

As of the date of publication of this solicitation, the Government expects that program goals as described herein may be met by proposed efforts for fundamental research and non-fundamental research. Some proposed research may present a high likelihood of disclosing performance characteristics of military systems or manufacturing technologies that are unique and critical to defense. Based on the anticipated type of proposer (e.g., university or industry) and the nature of the solicited work, the Government expects that some awards will include restrictions on the resultant research that will require the awardee to seek DARPA permission before publishing any information or results relative to the program. For additional information on fundamental research, please visit Proposer Instructions and General Terms and Conditions.

Proposers should indicate in their proposal whether they believe the scope of the research included in their proposal is fundamental or not. While proposers should clearly explain the intended results of their research, the Government shall have sole discretion to determine whether the proposed research shall be considered fundamental and to select the award instrument type. Appropriate language will be included in resultant awards for fundamental or non-fundamental research to prescribe publication requirements and other restrictions, as appropriate. This language can be found at Proposer Instructions and General Terms and Conditions.

For purposes of proposal classification, the determination of whether work constitutes fundamental research shall be assessed across the entirety of the proposed effort. If any portion of the proposed work is subject to controls or restrictions inconsistent with the definition of fundamental research, the prime awardee's effort shall not be designated as fundamental research. A proposed subawardee's effort may be identified as fundamental research only where its discrete scope of work independently meets the definition of fundamental research and is not subject to such controls or restrictions. The reverse circumstance is not permitted; a prime awardee's effort may not be designated as fundamental research where any other portion of the proposed effort is nonfundamental. The potential awardee is responsible for clearly identifying in its proposal which proposed subawardee efforts are asserted to be fundamental research and for providing sufficient rationale supporting each such determination.

F. Security Screening

1. Requirements for U.S. Permanent Resident and Foreign National Attendance at Program Events:

- All proposers are hereby notified regarding additional security screening measures for any U.S. Permanent Residents (i.e., Green Card holders) and foreign nationals who may attend any DARPA-sponsored event related to this program, including but not limited to oral proposal presentations,

kickoff meetings, program reviews, site visits, and demonstrations, **regardless of the event's format (in-person, offsite, or virtual).**

- With respect to this solicitation, proposers must submit an eForm 60 for all U.S. Permanent Residents and foreign nationals who may participate in the oral proposal presentation no later than the due date for the Notification of Intent to Propose specified in the Overview Information section. Failure to submit the required documentation in a timely manner may result in the individual being denied access to the event without exception.
- It is the responsibility of the prime contractor to ensure that all personnel, including those from subawardees, who are U.S. Permanent Residents or foreign nationals comply with the requirements detailed below.
- **Submission Link:** The form must be submitted electronically via the following secure portal: https://dtsn.darpa.mil/eform60/.

2. Fundamental Research Risk-Based Security Review (FRRBS) Process

DARPA's Fundamental Research Risk-Based Security Review (FRRBS) Process is an adaptive risk management security program designed to help protect the critical technology and performer intellectual property associated with DARPA's research projects by identifying the possible vectors of undue foreign influence. Effective June 30, 2025, the DARPA FRRBS will be conducted on all fundamental research awards executed through non-FAR-based instruments. FRRBS is an adaptive risk management security program designed to help protect the critical technology and performer intellectual property associated with DARPA's research projects by identifying the possible vectors of undue foreign influence. The DARPA team will create risk assessments of all proposed Senior/Key Personnel selected for negotiation of a fundamental research award. The DARPA risk assessment process will be conducted separately from the DARPA scientific review process and adjudicated prior to final award. For any proposal where fundamental research is included, proposers must submit the (1) Common Form for Biographical Sketch, and (2) Common Form for Current and Pending (Other) Support Information form for all covered individuals, in addition to the volumes and required attachments specified elsewhere in this Program Solicitation. Both forms are available via the NSF website - NSPM-33 Implementation Guidance - Division of Institution and Award Support (BFA/DIAS) | NSF - National Science Foundation. Please review the DARPA Fundamental Research Risk-Based Security Review Process detailed at Proposer Instructions: Other Transactions | DARPA.

G. Additional Information

- The APEX Accelerators program, formerly known as the Procurement Technical Assistance Program (PTAP), focuses on building strong, sustainable, and resilient U.S. supply chains by assisting a wide range of businesses that pursue and perform under contracts with the DoW, other federal agencies, state and local governments and with government prime contractors. See https://www.apexaccelerators.us/ for more information. APEX Accelerators helps businesses:
  - Complete registration with a wide range of databases necessary for them to participate in the government marketplace (e.g., SAM)
  - Identify which agencies and offices may need their products or services and how connect with buying agencies and offices
  - Determine whether they are ready for government opportunities and how to position themselves to succeed
  - Navigate solicitations and potential funding opportunities
  - Receive notifications of government contract opportunities on a regular basis

  - Network with buying officers, prime contractors, and other businesses
  - Resolve performance issues and prepare for audit, only if the service is needed, after receiving an award

- Project Spectrum is a nonprofit effort funded by the DoD Office of Small Business Programs to help educate the Defense Industrial Base (DIB) on compliance. Project Spectrum is vendor-neutral and available to assist businesses with their cybersecurity and compliance needs. Their mission is to improve cybersecurity readiness, resilience, and compliance for small/medium-sized businesses and the federal manufacturing supply chain. Project Spectrum events and programs will enhance awareness of cybersecurity threats within the manufacturing, research, and development, as well as knowledge-based services sectors of the industrial base. Project Spectrum will leverage strategic partnerships within and outside of the DoD to accelerate the overall cybersecurity compliance of the DIB. www.Projectspectrum.io is a web portal that will provide resources such as individualized dashboards, a marketplace, and Pilot Program to help accelerate cybersecurity compliance.
- Stay connected to MXO: Subscribe to DARPA MXO's newsletter for timely updates on research opportunities, upcoming events, ways to work with us, and more.
  - MXO will host its next upcoming event MXO's Spark Tank in Chicago, Illinois, on November 2-4, 2026. For details go to: https://www.darpa.mil/events/2026/spark-tank
- DARPAConnect offers free resources to potential performers to help them navigate DARPA, including "Understanding DARPA Award Vehicles and Solicitations," "Making the Most of Proposers Days," and "Tips for DARPA Proposal Success." Join DARPAConnect at https://www.darpaconnect.us to leverage on-demand learning and networking resources.
- DARPA has streamlined our Program Solicitations and is interested in your feedback on this new format. Please send any comments to DARPAsolicitations@darpa.mil.