NOTES

1. APPLICABLE STANDARDS/SPECIFICATIONS:
   A. ASME Y14.100-2004
   B. ASME Y14.5-2009

2. IDENTIFICATION OF THE SUGGESTED SOURCE(S) OF SUPPLY HEREON IS NOT TO BE CONSTRUED AS A GUARANTEE OF PRESENT OR CONTINUED AVAILABILITY AS A SOURCE OF SUPPLY FOR THE ITEM DESCRIBED ON THE DRAWING.

3. VENDOR PART NUMBER(S) ARE FOR REFERENCE ONLY. DRAWING SPECIFICATIONS AND DIMENSIONAL REQUIREMENTS SUPERCEDE VENDOR PART NUMBER(S) AND/OR CATALOG CALLOUTS.

4. SHOWN WITHOUT INSERTS.

REVISIONS			
LTR	NOR NUMBER	DATE	APPROVED
-	NOR 738-0001-001	2014-04-25	PMS
A	738-0197-002	2018-08-07	PMS

SALIENT FEATURES	
MUST BE INDUSTRIAL QUALITY	
WEIGHT	4 LB MAX
CUTTING FEATURE	REPLACEABLE INSERTS
NUMBER OF INSERTS	4 MIN
OVERALL MAX CUTTER DIAMETER	2-3/4"
MAX ENVELOPE	2-3/4" X 2-3/4" X 1-3/4"
ARBOR COMPATIBILITY	COMPATIBLE WITH FACE MILL ARBOR SPECIFIED BY DRAWING 11B5090772
INSERT COMPATIBILITY	COMPATIBLE WITH INSERTS SPECIFIED BY DRAWING 11B5091026

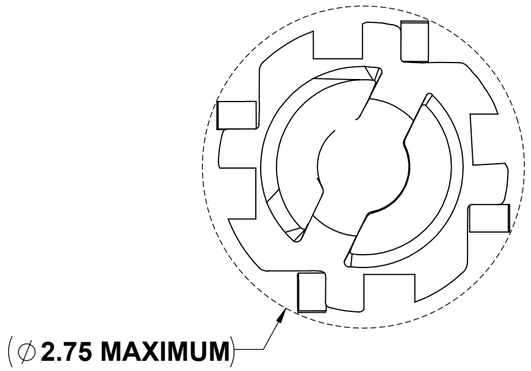

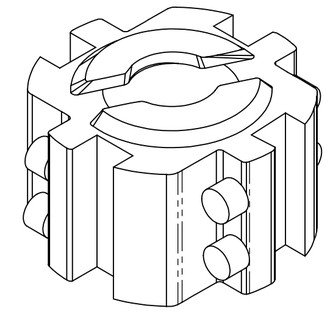

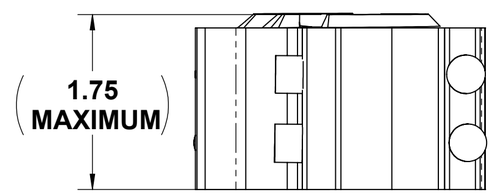

SUGGESTED SOURCE OF SUPPLY				
PART NUMBER	VENDOR DATA			
	NAME & ADDRESS	CAGE CODE	VENDOR PART NO.	DESCRIPTION
11B5090771	JPW INDUSTRIES INC. 427 NEW SANFORD ROAD LA VERGNE, TN 37086 888-804-7129	3ZFY8	JMD15-086	FACE MILL, REPLACEABLE INSERT

VENDOR ITEM CONTROL DRAWING

NEXT ASSY	UNLESS OTHERWISE SPECIFIED	ORIGINAL DATE (YR-MO-DA) 2011-12-12	U.S. ARMY RESEARCH, DEVELOPMENT AND ENGINEERING COMMAND EDGEWOOD CHEMICAL BIOLOGICAL CENTER ROCK ISLAND ARSENAL, ROCK ISLAND, IL 61299
11B5090769	DIMENSIONS ARE IN INCHES TOLERANCES ON: 2 PLACE DECIMALS ± 3 PLACE DECIMALS ± FRACTIONS ± ANGLES ±	DRAWN BY R. McCLAIN CHECKER R. McCLAIN	
		SUBMITTED R. McCLAIN	MILL/DRILL FACE MILL
	MATERIAL	DESIGN APPROVAL C. HANEY	
EQUIPMENT CODE NO.		DRAWING APPROVAL P. SCHLUE	SIZE C / CAGE CODE 5B5M3 / DWG NO. 11B5090771
738		CONTRACT NO.	SCALE 1:1 / REV: A / SHEET 1 OF 1

DISTRIBUTION STATEMENT A

APPROVED FOR PUBLIC RELEASE; DISTRIBUTION IS UNLIMITED.