within
INTERIOR DESIGN

Repair BEQ FC555

U.S. Marine Corps Base, Camp Lejeune, NC

Structural Interior Design Package
Sealed Final Submittal
May 2026

Table of Contents

1. Point of Contact List
2. Narrative of Interior Design Objectives
3. Meeting Minutes
4. Finish Plans & Schedules
5. Finish Boards

Point of Contact List

Base Architectural Supervisor
Cathy Martin,
Department of the Navy
Public Works Division
Marine Corps Base Camp Lejeune, NC
(910) 451-0394
catherine.martin@usmc.mil

A&E Project Manager
John Schmied, AIA, LEED AP, BD+C
MBF Architects
317-C Pollock Street
New Bern, NC 28560
(252) 637-6373
schmied@mbfarchitects.com

A&E Interior Designer
Jamie Kissel, NCIDQ
Within Interior Design
1008 Granby Street
Norfolk, VA 23510
(757) 224-0489
jkissel@withindesigns.com

SID Narrative

This Basis of Design Narrative outlines the proposed Structural Interior Design requirements for Repairs to BEQ FC555 at MCB Camp Lejeune, NC. The interior finishes are the most exposed interior elements in a building and must be durable to withstand the daily traffic and demands of the environment. Structural finishes in accordance with the following guidelines will provide longevity and timeless aesthetics without compromising the functional integrity of the facility.

FLOORING

Luxury vinyl tile flooring will be used in sleeping quarters, common lounge areas will receive epoxy resinous flooring. Laundry spaces will receive resinous epoxy flooring while bathrooms will receive color-body porcelain tile flooring. Kitchen will recieve quarry tile flooring.

PARTITIONS

Interior partitions will be painted with a textured acrylic coating. Vinyl wall graphics will be utilized in lounge areas to provide visual variety.

SPECIALTIES

Interior Signage will include identification, directional and informational systems utilizing permanent and changeable signage systems.

SUSTAINABILITY

Products with a long-life span have been selected to reduce the need for replacing materials. Products with recycled content have also been selected. Finishes with low VOC content and bio-based materials are given higher priority.

INTERIOR DESIGN CRITERIA

Interior Design work will comply with the latest edition of the following codes and standards:

FC 1-300-09N Navy & Marine Corps Design Requirements, 07-09-2021
FC 4-721-10N Navy & Marine Corps Unaccompanied Housing, 05-19-2022
UFC 1-200-01 DoD Building Code, 02-26-2024
UFC 1-200-02 High Performance and Sustainable Building Requirements, 06-01-2022
UFC 3-120-01 Design: Sign Standards, 02-01-2023
UFC 3-120-10 Interior Design, 06-15-2021
UFC 3-190-06 Protective Coatings and Paints, 03-01-2021
UFC 4-720-01 Lodging Facilities, 02-13-2012

Meeting Minutes

within
INTERIOR DESIGN

MEETING MINUTES

Project: Repair BEQ FC555
Meeting: 50% Review Meeting
Date: October 30th, 2025
Location: Microsoft Teams Meeting

PROJECT TEAM IN ATTENDANCE:

Architecture	MBF Architects	(252) 637-6373
Civil Engineer	Avolis Engineering	(252) 633-0068
Structural Engineer	Kaydos-Daniels Engineers	(919) 828-4966
Mechanical/Electrical/Plumbing	Crenshaw Consulting	(919) 871-1070
Fire Protection	Jensen Hughes	(757) 213-6856
Cost Estimating	Aiken Cost Consultants	(864) 232-9342
Geotechnical	ECS Southeast	(919) 861-9910
Interior Design	Within Interior Design	(757) 224-0489

Below are the items that were addressed at the 50% Review Meeting.

50% REVIEW COMMENTS

REVIEWER: KELLY ROOT

Item #3 I-111 – I-113: Bachelor housing is requesting we keep existing room numbers. They've had trouble with signage.

Response: Concur. Coordinate with MBF.

Item #37 I-101: I'm thinking we make the offices Resinous Flooring. Throughs?

Response: Concur. Floor finish in offices will be updated to Resinous Flooring RES-1.

Item #38 I-102: Rm 239 is telecom. Rm 238 is linen.

Response: Concur. Room name will be corrected.

Item #39 I-103: Rm 339 is office. Rm 338 is linen.

Response: Concur. Room name will be corrected.

Item #40 I-101 – I-103: Coordinate washer/dryer counts with arch

Response: Concur. Linked model will be updated to match Arch drawings.

Item #41 I-101 – I-103: Can you add the exterior walkway finish called out on these plans?

Response: Concur. RES-2 will be added to the exterior walkways on the finish plans.

Item #42 A2,C2/I-201: Can we put all drawers on this cabinet where section marker is taken?

Response: Concur. Base cabinet will be changed to 4 drawer cabinet.

Item #43 A3,C3/I-201: Add (5) 8-12" shelves on plan north wall. Make closet rod and shelf full width

Response: Concur. Closet casework will be revised.

Item #44 C1/I-201: Add medicine cabinet(s).

Response: Concur. WID will coordinate with MBF to update mirrors to include recessed medicine cabinet.

Item #45 A1,C1/I-201: Add corner cabinet and extend upper cabinets to the same extent of lower cabinets. Max size for fridge/microwave unit is 72" so I don't think we can fit cabinets above that.

Response: Concur. Casework will be revised.

Item #46 D4/I-301: Add additional shelf.

Response: Concur. Shelf will be added.

Item #47 I-201 & I-301: Continue SS to bottom of cabinets, not just a backsplash as kitchenette.

Response: Concur. Casework will be revised to show full-height solid surface backsplash.

Item #48 I-301: Bathroom vanity should have integral SS bowl.

Response: Concur. Section drawing will be revised to show integral SS bowl.

REVIEWER: FRANKLIN ETIENNE

Item #5 I-402: Room 239 is COMM (not linen storage).

Response: Concur. Room name will be revised.

Item #6 I-601: Room 239 is COMM (Not Linen Storage).

Response: Concur. Room name will be revised.

Item #7 I-601: Flooring should be SC-1 (Not RES-1).

Response: Concur. Floor finish will be revised.

ACTION ITEMS

1. **95% Submittal due to government on 12/22/25.**

MEETING MINUTES

Project: Repair BEQ FC555
Meeting: 95% Review Meeting
Date: January 22nd, 2026
Location: 1005 Michael Rd, Camp Lejeune, NC

PROJECT TEAM IN ATTENDANCE:

Architecture	MBF Architects	(252) 637-6373
Civil Engineer	Avolis Engineering	(252) 633-0068
Structural Engineer	Kaydos-Daniels Engineers	(919) 828-4966
Mechanical/Electrical/Plumbing	Crenshaw Consulting	(919) 871-1070
Fire Protection	Jensen Hughes	(757) 213-6856
Cost Estimating	Aiken Cost Consultants	(864) 232-9342
Geotechnical	ECS Southeast	(919) 861-9910
Interior Design	Within Interior Design	(757) 224-0489

Below are the items that were addressed at the 95% Review Meeting.

95% REVIEW COMMENTS

REVIEWER: TREVOR STREETER

Item #12 I-501: Reflect the accessible sign design, layout, and fonts as additional typical signage details.

Response: Concur. Details regarding high contrast/non-glare finishes, sans serif fonts, signage clarity and domed braille have been added to the SIGNAGE NOTES.

Item #16 I-101: Concrete flooring in the vending/corridor area changes to Resilient flooring in the kitchen and is not "technically" combustible-proof.

Response: Concur. Kitchen flooring will be changed to quarry tile.

Item #17 Is there a reason why sleeping rooms 131 and 315 have signage pointing to S7? When all of the other sleeping rooms have S1? Ensure all rooms have the correct exterior signage and that the overall count of these signs is reflected on the signage schedule on I-111, I-112, and I-113.

Response: Concur. These signs have been corrected.

Item #25 I-202: Label grout joint thickness (A1, A3).

Response: Concur. Grout thickness note will be added.

REVIEWER: CATHY MARTIN

Item #28 I-Sheets: The drawing package is missing the sleeping room furniture sheets, please add.

Response: FF&E & Furniture Plans are not included in the Interiors scope – MBF confirmed furniture layouts will be covered in Arch drawings.

Item #29 I-103: Replace room tag for room 339 to reflect OFFICE in lieu of COMM room.

Response: Concur. Room name will be corrected.

Item #35 I-301: Bathroom vanity should have integral ss bowl. (from 50% comments)

Response: Concur. Section drawing will be revised with added notation.

Item #36 I-601: Add mechanical buildings to room finish schedule

Response: Concur. Mechanical Building will be added.

ADDITIONAL NOTES

- Cathy Martin will provide a revised FF&E layout to MBF that will accommodate the PTAC and bump out at corner rooms.

ACTION ITEMS

1. **Digital Final Submittal due to government on 2/12/26.**

MEETING MINUTES

Project: Repair BEQ FC555
Meeting: Final Review Meeting
Date: March 24th, 2026
Location: 1005 Michael Rd, Camp Lejeune, NC

PROJECT TEAM IN ATTENDANCE:

Architecture	MBF Architects	(252) 637-6373
Civil Engineer	Avolis Engineering	(252) 633-0068
Structural Engineer	Kaydos-Daniels Engineers	(919) 828-4966
Mechanical/Electrical/Plumbing	Crenshaw Consulting	(919) 871-1070
Fire Protection	Jensen Hughes	(757) 213-6856
Cost Estimating	Aiken Cost Consultants	(864) 232-9342
Geotechnical	ECS Southeast	(919) 861-9910
Interior Design	Within Interior Design	(757) 224-0489

Below are the items that were addressed at the 95% Review Meeting.

FINAL REVIEW COMMENTS

REVIEWER: CATHY MARTIN

Item #17 I-601: Add mechanical buildings to room finish schedule

Response: Concur. Mechanical Building will be added.

Item #18 I-Sheets: The drawing package is missing the sleeping room furniture sheets, please add.

Response: FF&E & Furniture Plans are not included in the Interiors scope – MBF confirmed furniture layouts will be covered in Arch drawings.

Item #19 I-103: Replace room tag for room 339 to reflect OFFICE in lieu of COMM room.

Response: Concur. Room name will be corrected.

REVIEWER: TREVOR STREETER

Item #20 I-112/113: Should sleeping rooms 213, 215, 313, and 315 have signage reflect the other sleeping rooms (S1) instead of (S7)?

Response: Concur. These signs have been corrected

Item #21 I-202: Label grout joint thickness (A1, A3).

Response: Concur. Grout thickness to be added

Item #22 I-501: Reflect the accessible sign design, layout, and fonts as additional typical signage details.

Response: Avolis - Will provide Hc parking signage,route.
Concur. Details regarding high contrast/non-glare finishes, sans serif fonts, signage clarity and domed braille have been added to the SIGNAGE NOTES.

Item #23 I-101/102/103: If fixtures are shown in one room, it should be reflected throughout. Ensure towel bars, toilet paper dispensers, etc... are either all shown in the respective drawing sets, or are hidden until notated later. I'd hate for the wrong amount of something to be ordered or not factored into installation because it wasn't visually portrayed when it should have been, or hidden and given its own detail/enlarged sheet later-on. (A small note to tack on, women's toilet 140 and 147 is like this, where the hand dryer/paper towel dispenser is in one, but not another.)

Response: Updated. (MBFA)

Item #24 I-111: Can we have Janitor Room 141 swing into the laundry room 133? Might make access easier for the maintenance staff, rather than trapsing through an admin office during the middle of the day.

Response: MBF will make adjustments.

REVIEWER: DOUG STULTZ

Item #90 Spec Section 10 14 00.20: Related to Previous Comment GI10x floor Plans: (General Note 5: Please spell out the fire rating barrier marking per IBC section 703.5.) Prime Contractor and their sub-tier painting contractor need these requirements within a spec section. Insert the fire/smoke barrier signage requirements of IBC §703.5 into Spec Section 10 14 00.20 Interior Signage of if more appropriate Spec Section 09 90 00 Paints and Coatings

Response: Within will make adjustment. Verbiage provided by Doug will be added to the interior signage spec.

Finish Plans & Schedules

within
INTERIOR DESIGN

REVISIONS			
SYM.	DESCRIPTION	DATE	APP.

FLOOR FINISH KEY

- LVT-1
- RES-1
- RES-2
- SC-1
- T-1
- T-4

***HATCH PATTERN DOES NOT INDICATE DIRECTION OR METHOD OF FLOORING INSTALLATION.

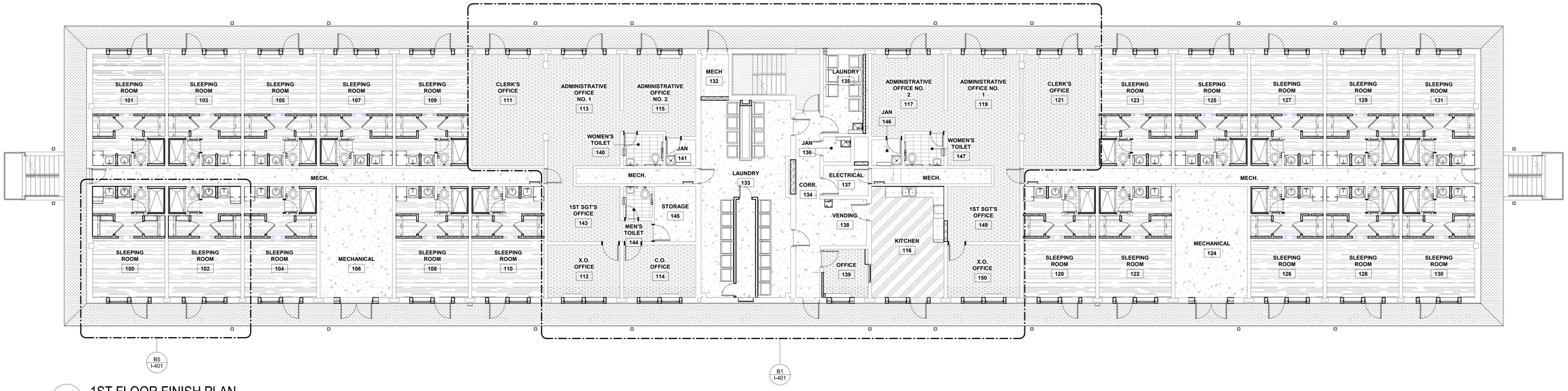

A1 1ST FLOOR FINISH PLAN

SCALE: 1/8" = 1'-0"

FINISH NOTES

A. FINISHES INDICATED ARE THE APPROVED BASIS OF DESIGN TO CONVEY COLOR, PATTERN, TEXTURE AND SALIENT CHARACTERISTICS ONLY. THE LISTING OF MANUFACTURER INFORMATION IS NOT INTENDED TO LIMIT THE SELECTION OF PRODUCTS PROVIDED BY OTHER MANUFACTURERS. PRODUCTS MEETING THESE CRITERIA WILL BE CONSIDERED AND MUST BE REVIEWED BY THE INTERIOR DESIGNER OF RECORD (IDOR) AND THE NAVFAC INTERIOR DESIGNER AND APPROVED BY THE CONTRACTING OFFICER.

B. FINISH ITEMS ARE NOT TO BE SUBSTITUTED DUE TO ORDERING LEAD TIMES. IT IS THE CONTRACTOR'S RESPONSIBILITY TO ORDER ALL MATERIALS IN TIME TO AVOID DELAYS.

C. COORDINATE THERMOSTAT LOCATIONS WITH MECHANICAL DRAWINGS AND CONSTRUCTION MANAGER. INSTALL THERMOSTATS NEAR A CORNER OF THE ROOM OR BY LIGHT SWITCHES. DO NOT INSTALL THERMOSTATS IN THE CENTER OF A WALL.

FINISH NOTES

D. ALL INTERIOR FINISHES IN VERTICAL EXIT WAYS, EXIT LOBBIES, AND EXIT CORRIDORS MUST MEET MINIMUM CLASS A RATING.

E. ALL MATERIALS/PRODUCTS ARE TO BE INSTALLED PER MANUFACTURER'S INSTALLATION REQUIREMENTS

F. SPRAY PAINT ELECTRICAL PANELS, ACCESS PANELS, AND EXPANSION JOINTS TO MATCH THE ADJACENT WALL COLOR. PANELS PAINTED BY BRUSH ARE NOT ACCEPTABLE

G. ALL FLOORING TRANSITIONS MUST MEET ABA GUIDELINES. FLOORING TRANSITIONS OCCURRING UNDER DOORS MUST BE CENTERED UNDER DOOR.

H. ROOMS IDENTIFIED TO RECEIVE TILE ON WALLS MUST INCLUDE METAL TRANSITIONS ON ALL OUTSIDE AND INSIDE CORNERS AS WELL AS THE INTERSECTION BETWEEN FLOOR AND WALL TILE WHERE APPLICABLE FOR A COMPLETE INSTALLATION.

I. ALL AREAS TO RECEIVE RESILIENT BASE (RB-1) WITH THE EXCEPTION OF AREAS RECEIVING FLOOR TILE OR EPOXY RESINOUS FLOORING.

FINISH NOTES

J. ALL WALLS TO BE PAINTED (PNT-1) UNLESS OTHERWISE INDICATED. ALL HOLLOW METAL DOORS AND DOOR FRAMES TO BE PAINTED (PNT-5). ALL GWB & EXPOSED CEILINGS TO BE PAINTED (PNT-6).

K. ALL WINDOW SILLS TO BE SOLID SURFACE (SS-2).

L. ALL SHOWER FLOORS AND SHOWER WALLS TO BE SOLID SURFACE (SS-3).

M. ALL INTERIOR WOOD DOORS TO BE (WD-1).

N. ALL STAIRS, STAIR LANDINGS, AND EXTERIOR FLOORING SURFACES TO RECEIVE EPOXY RESINOUS FLOOR FINISH (RES-2). STAIR STRINGERS TO RECEIVE PAINT FINISH (PNT-7). SEE DETAIL A3/1-202.

O. EXTERIOR WALLS MUST BE CLEANED AND REPAINTED TO MATCH EXISTING CONDITIONS.

P. LVT FLOORING COVERAGE INCLUDES THE ENTIRETY OF EACH SLEEPING ROOM ALL THE WAY UP TO THE DOORWAY INTO THE TOILET/SHOWER COMPARTMENT. SEE ENLARGED PLAN B5/I-401.

Q. SEE I-601 FOR FINISH LEGEND.

GRAPHIC SCALE:

1/8" =1'-0" 0' 4' 8' 16'

COMMONWEALTH OF VIRGINIA
JAMIE D. KISSEL
CERTIFIED INTERIOR DESIGNER
5/13/26

within INTERIOR DESIGN
1008 GRANBY STREET
NORFOLK, VA 23510
757-224-0888

MBFA NO.:

NBC ARCHITECTS PA
REGISTERED ARCHITECTURE FIRM
CERT. NO. 50679
NORTH CAROLINA
NEW BERN N.C.

DES. JDK
DR. APG
CHK. JDK
SUBMITTED BY:
DESIGN DIR. CHRIS MAAS
APPROVED: PWO OR OICC DATE
SATISFACTORY TO: DATE

DEPARTMENT OF THE NAVY NAVAL FACILITIES ENGINEERING SYSTEMS COMMAND

MARINE CORPS BASE

CAMP LEJEUNE, NORTH CAROLINA

REPAIR BEQ FC555

FIRST FLOOR FINISH PLAN

I-101

SIZE	CODE IDENT. NO.	NAVFAC DRAWING NO.
E1	80091	60042659
		CONSTR. CONTR. NO. : N40085-25-B-0009

SCALE AS NOTED SPEC. 05-25-0009 SHEET 71 OF 203

File Path: W:\2513 FC555 BEQ Renovation CL\Revit\2502B FC555 WID R23.rvt
Print Date: 5/12/2026 4:05:40 PM

REVISIONS			
SYM.	DESCRIPTION	DATE	APP.

FLOOR FINISH KEY

- LVT-1
- RES-1
- RES-2
- SC-1
- T-1
- T-4

***HATCH PATTERN DOES NOT INDICATE DIRECTION OR METHOD OF FLOORING INSTALLATION.

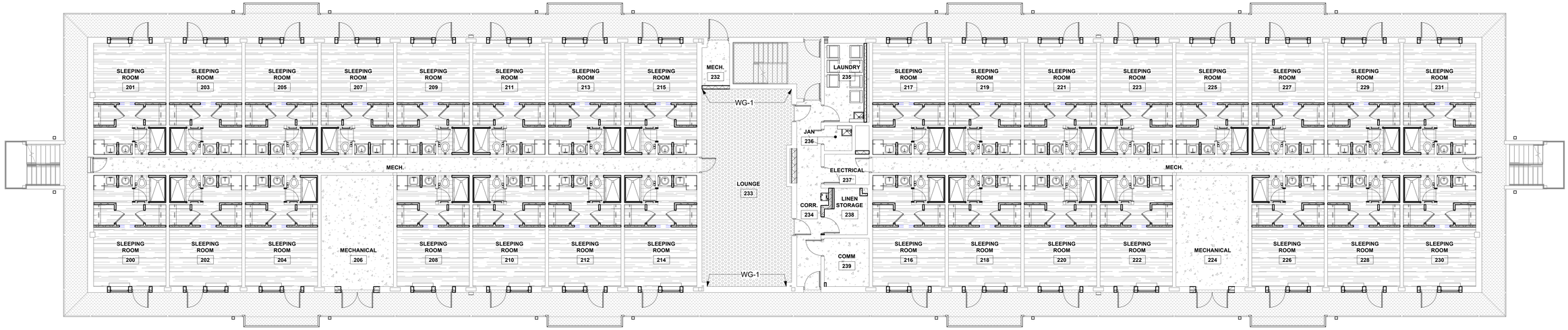

A1 2ND FLOOR FINISH PLAN

SCALE: 1/8" = 1'-0"

FINISH NOTES

A. FINISHES INDICATED ARE THE APPROVED BASIS OF DESIGN TO CONVEY COLOR, PATTERN, TEXTURE AND SALIENT CHARACTERISTICS ONLY. THE LISTING OF MANUFACTURER INFORMATION IS NOT INTENDED TO LIMIT THE SELECTION OF PRODUCTS PROVIDED BY OTHER MANUFACTURERS. PRODUCTS MEETING THESE CRITERIA WILL BE CONSIDERED AND MUST BE REVIEWED BY THE INTERIOR DESIGNER OF RECORD (IDOR) AND THE NAVFAC INTERIOR DESIGNER AND APPROVED BY THE CONTRACTING OFFICER.

B. FINISH ITEMS ARE NOT TO BE SUBSTITUTED DUE TO ORDERING LEAD TIMES. IT IS THE CONTRACTOR'S RESPONSIBILITY TO ORDER ALL MATERIALS IN TIME TO AVOID DELAYS.

C. COORDINATE THERMOSTAT LOCATIONS WITH MECHANICAL DRAWINGS AND CONSTRUCTION MANAGER. INSTALL THERMOSTATS NEAR A CORNER OF THE ROOM OR BY LIGHT SWITCHES. DO NOT INSTALL THERMOSTATS IN THE CENTER OF A WALL.

FINISH NOTES

D. ALL INTERIOR FINISHES IN VERTICAL EXIT WAYS, EXIT LOBBIES, AND EXIT CORRIDORS MUST MEET MINIMUM CLASS A RATING.

E. ALL MATERIALS/PRODUCTS ARE TO BE INSTALLED PER MANUFACTURER'S INSTALLATION REQUIREMENTS

F. SPRAY PAINT ELECTRICAL PANELS, ACCESS PANELS, AND EXPANSION JOINTS TO MATCH THE ADJACENT WALL COLOR. PANELS PAINTED BY BRUSH ARE NOT ACCEPTABLE

G. ALL FLOORING TRANSITIONS MUST MEET ABA GUIDELINES. FLOORING TRANSITIONS OCCURRING UNDER DOORS MUST BE CENTERED UNDER DOOR.

H. ROOMS IDENTIFIED TO RECEIVE TILE ON WALLS MUST INCLUDE METAL TRANSITIONS ON ALL OUTSIDE AND INSIDE CORNERS AS WELL AS THE INTERSECTION BETWEEN FLOOR AND WALL TILE WHERE APPLICABLE FOR A COMPLETE INSTALLATION.

I. ALL AREAS TO RECEIVE RESILIENT BASE (RB-1) WITH THE EXCEPTION OF AREAS RECEIVING FLOOR TILE OR EPOXY RESINOUS FLOORING.

FINISH NOTES

J. ALL WALLS TO BE PAINTED (PNT-1) UNLESS OTHERWISE INDICATED. ALL HOLLOW METAL DOORS AND DOOR FRAMES TO BE PAINTED (PNT-5). ALL GWB & EXPOSED CEILINGS TO BE PAINTED (PNT-6).

K. ALL WINDOW SILLS TO BE SOLID SURFACE (SS-2).

L. ALL SHOWER FLOORS AND SHOWER WALLS TO BE SOLID SURFACE (SS-3).

M. ALL INTERIOR WOOD DOORS TO BE (WD-1).

N. ALL STAIRS, STAIR LANDINGS, AND EXTERIOR FLOORING SURFACES TO RECEIVE EPOXY RESINOUS FLOOR FINISH (RES-2). STAIR STRINGERS TO RECEIVE PAINT FINISH (PNT-7). SEE DETAIL A3/1-202.

O. EXTERIOR WALLS MUST BE CLEANED AND REPAINTED TO MATCH EXISTING CONDITIONS.

P. LVT FLOORING COVERAGE INCLUDES THE ENTIRETY OF EACH SLEEPING ROOM ALL THE WAY UP TO THE DOORWAY INTO THE TOILET/SHOWER COMPARTMENT. SEE ENLARGED PLAN B5/I-401.

Q. SEE I-601 FOR FINISH LEGEND.

GRAPHIC SCALE:

1/8" =1'-0" 0' 4' 8' 16'

COMMONWEALTH OF VIRGINIA
CERTIFIED INTERIOR DESIGNER
C.P.D.
JOHN D. KOBEL
5/13/26

MBF ARCHITECTS, P.A.
REGISTERED ARCHITECTURE CORPORATION
CERT. NO. 50679
NEW BERN NC

MBFA NO:

within
INTERIOR DESIGN
1008 GRANBY STREET
NORFOLK, VA 23510
757-624-0484

DES. JDK
DR. APG
CHK. JDK
SUBMITTED BY:
DESIGN DIR. CHRIS MAAS
APPROVED: PWO OR OICC DATE
SATISFACTORY TO: DATE

I-102

DEPARTMENT OF THE NAVY NAVAL FACILITIES ENGINEERING SYSTEMS COMMAND

MARINE CORPS BASE

CAMP LEJEUNE, NORTH CAROLINA

REPAIR BEQ FC555

SECOND FLOOR FINISH PLAN

SIZE E1 | CODE IDENT. NO. 80091 | NAVFAC DRAWING NO. 60042660

CONSTR. CONTR. NO. : N40085-25-B-0009

SCALE AS NOTED | SPEC. 05-25-0009 | SHEET 72 OF 203

File Path: W:\2513 FC555 BEQ Renovation CLR\revit\2502B FC555 WID R23.rvt
Print Date: 5/8/2026 3:42:20 PM

REVISIONS			
SYM.	DESCRIPTION	DATE	APP.

FLOOR FINISH KEY

- LVT-1
- RES-1
- RES-2
- SC-1
- T-1
- T-4

***HATCH PATTERN DOES NOT INDICATE DIRECTION OR METHOD OF FLOORING INSTALLATION.

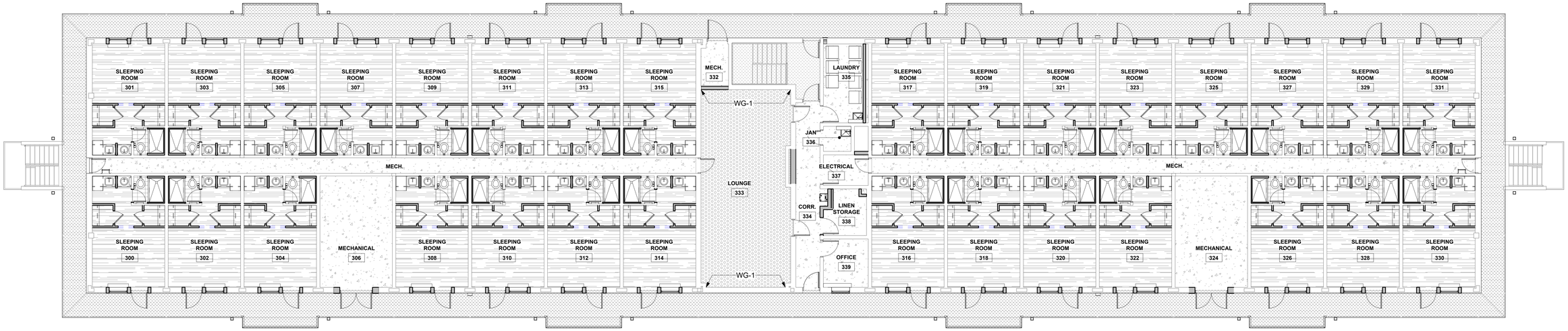

A1 3RD FLOOR FINISH PLAN

SCALE: 1/8" = 1'-0"

FINISH NOTES

A. FINISHES INDICATED ARE THE APPROVED BASIS OF DESIGN TO CONVEY COLOR, PATTERN, TEXTURE AND SALIENT CHARACTERISTICS ONLY. THE LISTING OF MANUFACTURER INFORMATION IS NOT INTENDED TO LIMIT THE SELECTION OF PRODUCTS PROVIDED BY OTHER MANUFACTURERS. PRODUCTS MEETING THESE CRITERIA WILL BE CONSIDERED AND MUST BE REVIEWED BY THE INTERIOR DESIGNER OF RECORD (IDOR) AND THE NAVFAC INTERIOR DESIGNER AND APPROVED BY THE CONTRACTING OFFICER.

B. FINISH ITEMS ARE NOT TO BE SUBSTITUTED DUE TO ORDERING LEAD TIMES. IT IS THE CONTRACTOR'S RESPONSIBILITY TO ORDER ALL MATERIALS IN TIME TO AVOID DELAYS.

C. COORDINATE THERMOSTAT LOCATIONS WITH MECHANICAL DRAWINGS AND CONSTRUCTION MANAGER. INSTALL THERMOSTATS NEAR A CORNER OF THE ROOM OR BY LIGHT SWITCHES. DO NOT INSTALL THERMOSTATS IN THE CENTER OF A WALL.

FINISH NOTES

D. ALL INTERIOR FINISHES IN VERTICAL EXIT WAYS, EXIT LOBBIES, AND EXIT CORRIDORS MUST MEET MINIMUM CLASS A RATING.

E. ALL MATERIALS/PRODUCTS ARE TO BE INSTALLED PER MANUFACTURER'S INSTALLATION REQUIREMENTS

F. SPRAY PAINT ELECTRICAL PANELS, ACCESS PANELS, AND EXPANSION JOINTS TO MATCH THE ADJACENT WALL COLOR. PANELS PAINTED BY BRUSH ARE NOT ACCEPTABLE

G. ALL FLOORING TRANSITIONS MUST MEET ABA GUIDELINES. FLOORING TRANSITIONS OCCURRING UNDER DOORS MUST BE CENTERED UNDER DOOR.

H. ROOMS IDENTIFIED TO RECEIVE TILE ON WALLS MUST INCLUDE METAL TRANSITIONS ON ALL OUTSIDE AND INSIDE CORNERS AS WELL AS THE INTERSECTION BETWEEN FLOOR AND WALL TILE WHERE APPLICABLE FOR A COMPLETE INSTALLATION.

I. ALL AREAS TO RECEIVE RESILIENT BASE (RB-1) WITH THE EXCEPTION OF AREAS RECEIVING FLOOR TILE OR EPOXY RESINOUS FLOORING.

FINISH NOTES

J. ALL WALLS TO BE PAINTED (PNT-1) UNLESS OTHERWISE INDICATED. ALL HOLLOW METAL DOORS AND DOOR FRAMES TO BE PAINTED (PNT-5). ALL GWB & EXPOSED CEILINGS TO BE PAINTED (PNT-6).

K. ALL WINDOW SILLS TO BE SOLID SURFACE (SS-2).

L. ALL SHOWER FLOORS AND SHOWER WALLS TO BE SOLID SURFACE (SS-3).

M. ALL INTERIOR WOOD DOORS TO BE (WD-1).

N. ALL STAIRS, STAIR LANDINGS, AND EXTERIOR FLOORING SURFACES TO RECEIVE EPOXY RESINOUS FLOOR FINISH (RES-2). STAIR STRINGERS TO RECEIVE PAINT FINISH (PNT-7). SEE DETAIL A3/1-202.

O. EXTERIOR WALLS MUST BE CLEANED AND REPAINTED TO MATCH EXISTING CONDITIONS.

P. LVT FLOORING COVERAGE INCLUDES THE ENTIRETY OF EACH SLEEPING ROOM ALL THE WAY UP TO THE DOORWAY INTO THE TOILET/SHOWER COMPARTMENT. SEE ENLARGED PLAN B5/I-401.

Q. SEE I-601 FOR FINISH LEGEND.

GRAPHIC SCALE:

1/8" =1'-0" 0' 4' 8' 16'

COMMONWEALTH OF VIRGINIA
JOHN D. KISSEL
CERTIFIED INTERIOR DESIGNER
5/13/26

MSF ARCHITECTS, P.A.
CERT. NO. 50679
NEW BERN NC

I-103

within INTERIOR DESIGN
1008 GRANBY STREET
NORFOLK, VA 23510
757-314-0484

MBFA NO:

DEPARTMENT OF THE NAVY NAVAL FACILITIES ENGINEERING SYSTEMS COMMAND

MARINE CORPS BASE

CAMP LEJEUNE, NORTH CAROLINA

REPAIR BEQ FC555

THIRD FLOOR FINISH PLAN

DES. JDK
DR. APG
CHK. JDK
SUBMITTED BY:
DESIGN DIR. CHRIS MAAS
APPROVED: PWO OR OICC DATE
SATISFACTORY TO: DATE

SIZE E1 | CODE IDENT. NO. 80091 | NAVFAC DRAWING NO. 60042661
CONSTR. CONTR. NO. : N40085-25-B-0009
SCALE AS NOTED | SPEC. 05-25-0009 | SHEET 73 OF 203

File Path: W:\2513 FC555 BEQ Renovation CLR\revit\2502B FC555 WID R23.rvt
Print Date: 5/6/2026 3:42:22 PM

REVISIONS			
SYM.	DESCRIPTION	DATE	APP.

SIGNAGE SCHEDULE

TYPE	DESCRIPTION	QTY
S1	SLEEPING QUARTERS IDENTIFICATION SIGN	80
S2	PERMANENT ROOM IDENTIFICATION SIGN	37
S3	NON-PERMANENT ROOM IDENTIFICATION SIGN	3
S4	STAIRWELL LEVEL INDICATOR	9
S5M	MENS RESTROOM IDENTIFICATION SIGN	1
S5W	WOMENS RESTROOM IDENTIFICATION SIGN	2
S6	SMALL DIRECTIONAL SIGN	11
S7	EXTERIOR ROOM SIGN	13
S8	STAIRWELL IDENTIFICATION SIGN	10

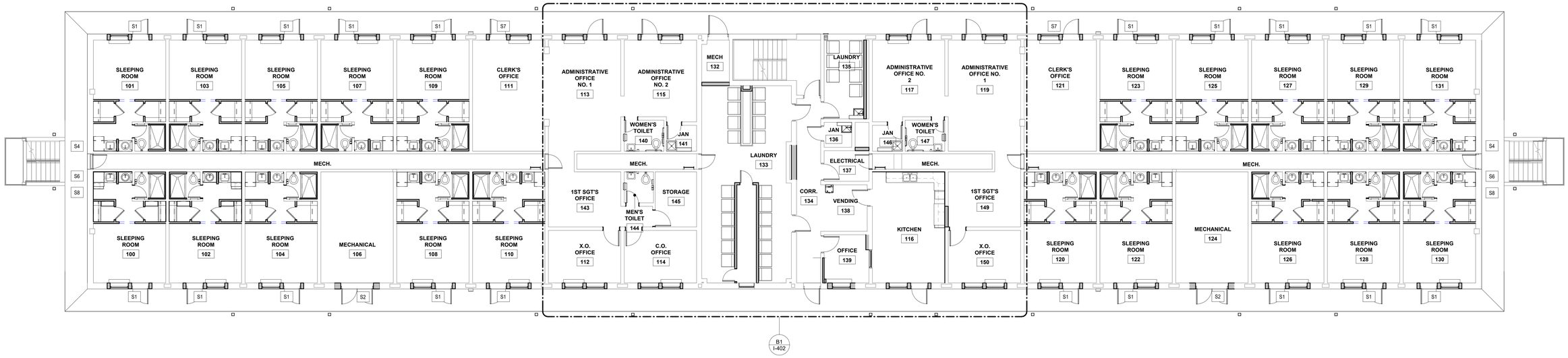

A1 1ST FLOOR SIGNAGE PLAN

SCALE: 1/8" = 1'-0"

SIGNAGE NOTES

A. ALL SIGNAGE TO COMPLY WITH UFC 3 120 01.
B. ALL SIGN TYPES, TEXT WORDING, AND ROOM NUMBERS TO BE VERIFIED WITH END USER AND REVIEWED BY NAVFAC INTERIOR DESIGNER PRIOR TO FABRICATION.
C. ALL GRADE 2 BRAILLE TO BE TACTILE RAISED 0.8 MM FROM THE SURFACE WITH ROUNDED DOTS.
D. SIGNS MUST USE HIGH CONTRAST, NON-GLARE FINISHES. CHARACTERS MUST BE UPPER CASE AND USE SANS SERIF FONTS.
E. SIGNS MUST INCLUDE CLEAR VISUAL ELEMENTS FOR INDIVIDUALS WITH LOW VISION, BLINDNESS AND COGNITIVE DISABILITIES.
F. SIGNS THAT MOUNT TO GLASS MUST INCLUDE AN EQUALLY SIZED BLANK SIGN PANEL ALIGNED TO OPPOSITE SIDE OF THE GLASS.
G. REFER TO SHEET I-501 FOR SIGNAGE DETAILS.
H. REFER TO SHEET I-601 FINISH LEGEND FOR SIGNAGE FINISHES.
I. MOUNTING OF SIGNAGE SYSTEM MUST INCLUDE SURFACE MOUNTING WITH SCREW-ON APPLICATION FOR INTERIOR WALLS.
J. SEE ELEVATION I-501 FOR MOUNTING HEIGHT OF ACRYLIC SIGNAGE.

GRAPHIC SCALE:

1/8" =1'-0" 0' 4' 8' 16'

COMMONWEALTH OF VIRGINIA
JOHN D. KOSEL
CERTIFIED INTERIOR DESIGNER
5/13/26

MBF ARCHITECTS, P.A.
CERTIFIED ARCHITECTURAL DESIGNER
CERT. NO. 50679
NEW BERN, N.C.

MBFA NO.

within
INTERIOR DESIGN
1008 GRANBY STREET
NORFOLK, VA 23510
757-994-0585

DES. JDK
DR. APG
CHK. JDK
SUBMITTED BY:
DESIGN DIR. CHRIS MAAS
APPROVED: PWO OR OICC DATE
SATISFACTORY TO: DATE

I-111

DEPARTMENT OF THE NAVY NAVAL FACILITIES ENGINEERING SYSTEMS COMMAND

MARINE CORPS BASE

CAMP LEJEUNE, NORTH CAROLINA

REPAIR BEQ FC555

FIRST FLOOR SIGNAGE PLAN

SIZE E1 | CODE IDENT. NO. 80091 | NAVFAC DRAWING NO. 60042662

CONSTR. CONTR. NO. : N40085-25-B-0009

SCALE AS NOTED | SPEC. 05-25-0009 | SHEET 74 OF 203

File Path: W:\2513 FC555 BEQ Renovation CLL\Revit\2502B FC555 WID R23.rvt
Print Date: 5/8/2026 3:42:24 PM

REVISIONS			
SYM.	DESCRIPTION	DATE	APP.

SIGNAGE SCHEDULE

TYPE	DESCRIPTION	QTY
S1	SLEEPING QUARTERS IDENTIFICATION SIGN	80
S2	PERMANENT ROOM IDENTIFICATION SIGN	37
S3	NON-PERMANENT ROOM IDENTIFICATION SIGN	3
S4	STAIRWELL LEVEL INDICATOR	9
S5M	MENS RESTROOM IDENTIFICATION SIGN	1
S5W	WOMENS RESTROOM IDENTIFICATION SIGN	2
S6	SMALL DIRECTIONAL SIGN	11
S7	EXTERIOR ROOM SIGN	13
S8	STAIRWELL IDENTIFICATION SIGN	10

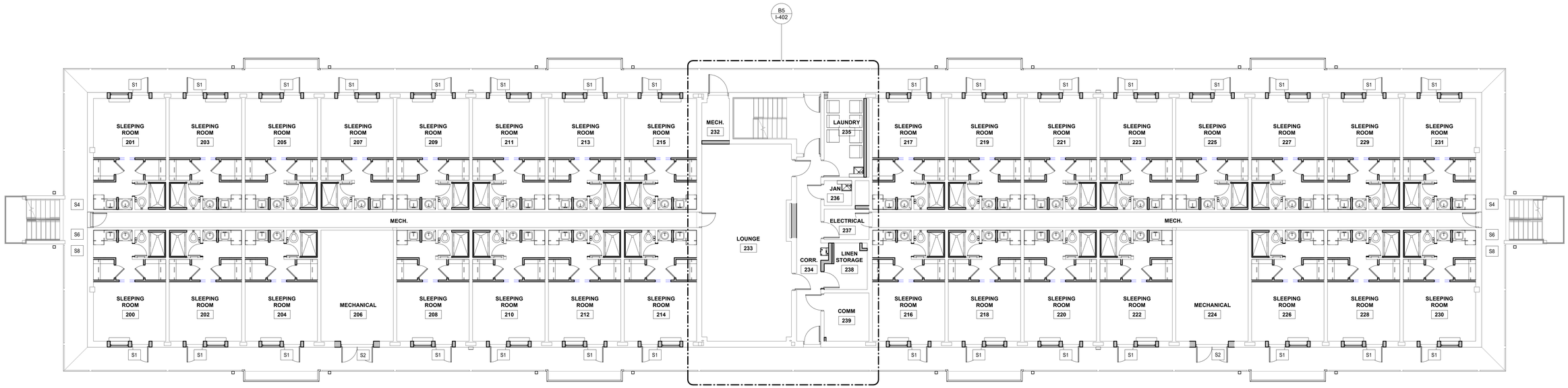

A1 2ND FLOOR SIGNAGE PLAN

SCALE: 1/8" = 1'-0"

SIGNAGE NOTES

A. ALL SIGNAGE TO COMPLY WITH UFC 3 120 01.
B. ALL SIGN TYPES, TEXT WORDING, AND ROOM NUMBERS TO BE VERIFIED WITH END USER AND REVIEWED BY NAVFAC INTERIOR DESIGNER PRIOR TO FABRICATION.
C. ALL GRADE 2 BRAILLE TO BE TACTILE RAISED 0.8 MM FROM THE SURFACE WITH ROUNDED DOTS.
D. SIGNS MUST USE HIGH CONTRAST, NON-GLARE FINISHES. CHARACTERS MUST BE UPPER CASE AND USE SANS SERIF FONTS.
E. SIGNS MUST INCLUDE CLEAR VISUAL ELEMENTS FOR INDIVIDUALS WITH LOW VISION, BLINDNESS AND COGNITIVE DISABILITIES.
F. SIGNS THAT MOUNT TO GLASS MUST INCLUDE AN EQUALLY SIZED BLANK SIGN PANEL ALIGNED TO OPPOSITE SIDE OF THE GLASS.
G. REFER TO SHEET I-501 FOR SIGNAGE DETAILS.
H. REFER TO SHEET I-601 FINISH LEGEND FOR SIGNAGE FINISHES.
I. MOUNTING OF SIGNAGE SYSTEM MUST INCLUDE SURFACE MOUNTING WITH SCREW-ON APPLICATION FOR INTERIOR WALLS.
J. SEE ELEVATION I-501 FOR MOUNTING HEIGHT OF ACRYLIC SIGNAGE.

GRAPHIC SCALE:

1/8" =1'-0" 0' 4' 8' 16'

COMMONWEALTH OF VIRGINIA
CERTIFIED INTERIOR DESIGNER
JOHN D. KOBEL
5/13/26

within INTERIOR DESIGN
1008 GRANBY STREET
NORFOLK, VA 23510
757-624-0484

MBF ARCHITECTS, P.A.
ARCHITECTURE INTERIOR DESIGN
CERT. NO. 50679
NORTH CAROLINA
NEW BERN NC

I-112

DEPARTMENT OF THE NAVY NAVAL FACILITIES ENGINEERING SYSTEMS COMMAND

MARINE CORPS BASE

CAMP LEJEUNE, NORTH CAROLINA

MBFA NO:

DES. JDK
DR. APG
CHK. JDK
SUBMITTED BY:
DESIGN DIR. CHRIS MAAS
APPROVED: PWO OR OICC DATE
SATISFACTORY TO: DATE

REPAIR BEQ FC555

SECOND FLOOR SIGNAGE PLAN

SIZE E1 | CODE IDENT. NO. 80091 | NAVFAC DRAWING NO. 60042663

CONSTR. CONTR. NO. : N40085-25-B-0009

SCALE AS NOTED | SPEC. 05-25-0009 | SHEET 75 OF 203

File Path: W:\2513 FC555 BEQ Renovation CLI\Revit\2502B FC555 WID R23.rvt
Print Date: 5/8/2026 3:42:26 PM

REVISIONS			
SYM.	DESCRIPTION	DATE	APP.

SIGNAGE SCHEDULE

TYPE	DESCRIPTION	QTY
S1	SLEEPING QUARTERS IDENTIFICATION SIGN	80
S2	PERMANENT ROOM IDENTIFICATION SIGN	37
S3	NON-PERMANENT ROOM IDENTIFICATION SIGN	3
S4	STAIRWELL LEVEL INDICATOR	9
S5M	MENS RESTROOM IDENTIFICATION SIGN	1
S5W	WOMENS RESTROOM IDENTIFICATION SIGN	2
S6	SMALL DIRECTIONAL SIGN	11
S7	EXTERIOR ROOM SIGN	13
S8	STAIRWELL IDENTIFICATION SIGN	10

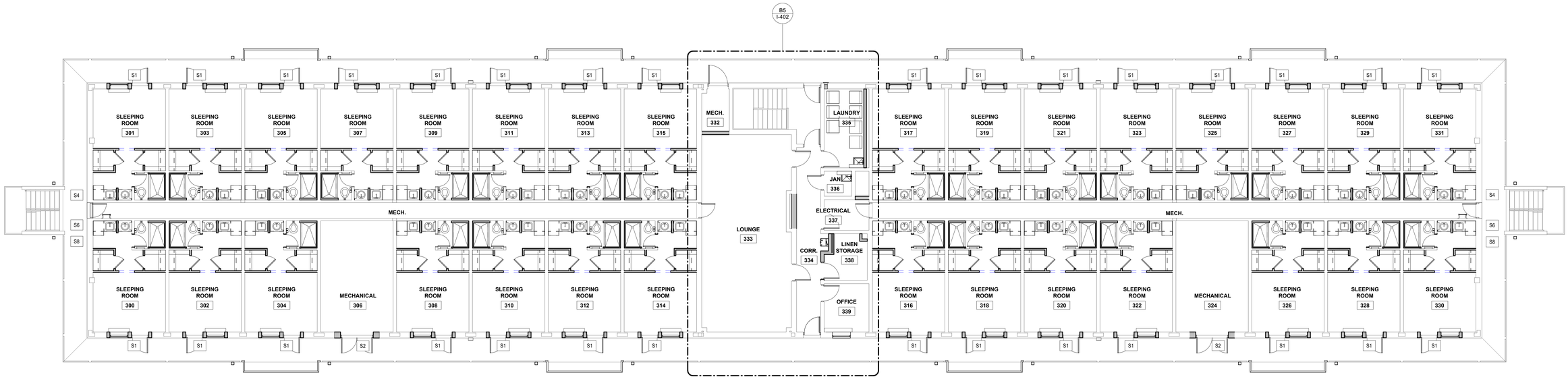

A1 3RD FLOOR SIGNAGE PLAN

SCALE: 1/8" = 1'-0"

SIGNAGE NOTES

A. ALL SIGNAGE TO COMPLY WITH UFC 3 120 01.
B. ALL SIGN TYPES, TEXT WORDING, AND ROOM NUMBERS TO BE VERIFIED WITH END USER AND REVIEWED BY NAVFAC INTERIOR DESIGNER PRIOR TO FABRICATION.
C. ALL GRADE 2 BRAILLE TO BE TACTILE RAISED 0.8 MM FROM THE SURFACE WITH ROUNDED DOTS.
D. SIGNS MUST USE HIGH CONTRAST, NON-GLARE FINISHES. CHARACTERS MUST BE UPPER CASE AND USE SANS SERIF FONTS.
E. SIGNS MUST INCLUDE CLEAR VISUAL ELEMENTS FOR INDIVIDUALS WITH LOW VISION, BLINDNESS AND COGNITIVE DISABILITIES.
F. SIGNS THAT MOUNT TO GLASS MUST INCLUDE AN EQUALLY SIZED BLANK SIGN PANEL ALIGNED TO OPPOSITE SIDE OF THE GLASS.
G. REFER TO SHEET I-501 FOR SIGNAGE DETAILS.
H. REFER TO SHEET I-601 FINISH LEGEND FOR SIGNAGE FINISHES.
I. MOUNTING OF SIGNAGE SYSTEM MUST INCLUDE SURFACE MOUNTING WITH SCREW-ON APPLICATION FOR INTERIOR WALLS.
J. SEE ELEVATION I-501 FOR MOUNTING HEIGHT OF ACRYLIC SIGNAGE.

GRAPHIC SCALE:

1/8" =1'-0" 0' 4' 8' 16'

COMMONWEALTH OF VIRGINIA
JOHN D. KISSEL
CERTIFIED INTERIOR DESIGNER
5/13/26

NSF ARCHITECTS, P.A.
CERT. NO. 50679
NEW BERN, NC

I-113

within INTERIOR DESIGN
1008 GRANBY STREET
NORFOLK, VA 23510
757-314-0484

MBFA NO.:

DEPARTMENT OF THE NAVY NAVAL FACILITIES ENGINEERING SYSTEMS COMMAND

MARINE CORPS BASE

CAMP LEJEUNE, NORTH CAROLINA

REPAIR BEQ FC555

THIRD FLOOR SIGNAGE PLAN

DES. JDK
DR. APG
CHK. JDK
SUBMITTED BY:
DESIGN DIR. CHRIS MAAS
APPROVED: PWO OR OICC DATE
SATISFACTORY TO: DATE

SIZE E1 | CODE IDENT. NO. 80091 | NAVFAC DRAWING NO. 60042664
CONSTR. CONTR. NO. : N40085-25-B-0009
SCALE AS NOTED | SPEC. 05-25-0009 | SHEET 76 OF 203

File Path: W:\2513 FC555 BEQ Renovation CLI\Revit\2502B FC555 WID R23.rvt
Print Date: 5/8/2026 3:42:28 PM

REVISIONS			
SYM.	DESCRIPTION	DATE	APP.

FINISH NOTES

A. FINISHES INDICATED ARE THE APPROVED BASIS OF DESIGN TO CONVEY COLOR, PATTERN, TEXTURE AND SALIENT CHARACTERISTICS ONLY. THE LISTING OF MANUFACTURER INFORMATION IS NOT INTENDED TO LIMIT THE SELECTION OF PRODUCTS PROVIDED BY OTHER MANUFACTURERS. PRODUCTS MEETING THESE CRITERIA WILL BE CONSIDERED AND MUST BE REVIEWED BY THE INTERIOR DESIGNER OF RECORD (IDOR) AND THE NAVFAC INTERIOR DESIGNER AND APPROVED BY THE CONTRACTING OFFICER.

B. FINISH ITEMS ARE NOT TO BE SUBSTITUTED DUE TO ORDERING LEAD TIMES. IT IS THE CONTRACTOR'S RESPONSIBILITY TO ORDER ALL MATERIALS IN TIME TO AVOID DELAYS.

C. COORDINATE THERMOSTAT LOCATIONS WITH MECHANICAL DRAWINGS AND CONSTRUCTION MANAGER. INSTALL THERMOSTATS NEAR A CORNER OF THE ROOM OR BY LIGHT SWITCHES. DO NOT INSTALL THERMOSTATS IN THE CENTER OF A WALL.

FINISH NOTES

D. ALL INTERIOR FINISHES IN VERTICAL EXIT WAYS, EXIT LOBBIES, AND EXIT CORRIDORS MUST MEET MINIMUM CLASS A RATING.

E. ALL MATERIALS/PRODUCTS ARE TO BE INSTALLED PER MANUFACTURER'S INSTALLATION REQUIREMENTS

F. SPRAY PAINT ELECTRICAL PANELS, ACCESS PANELS, AND EXPANSION JOINTS TO MATCH THE ADJACENT WALL COLOR. PANELS PAINTED BY BRUSH ARE NOT ACCEPTABLE

G. ALL FLOORING TRANSITIONS MUST MEET ABA GUIDELINES. FLOORING TRANSITIONS OCCURRING UNDER DOORS MUST BE CENTERED UNDER DOOR.

H. ROOMS IDENTIFIED TO RECEIVE TILE ON WALLS MUST INCLUDE METAL TRANSITIONS ON ALL OUTSIDE AND INSIDE CORNERS AS WELL AS THE INTERSECTION BETWEEN FLOOR AND WALL TILE WHERE APPLICABLE FOR A COMPLETE INSTALLATION.

I. ALL AREAS TO RECEIVE RESILIENT BASE (RB-1) WITH THE EXCEPTION OF AREAS RECEIVING FLOOR TILE OR EPOXY RESINOUS FLOORING.

FINISH NOTES

J. ALL WALLS TO BE PAINTED (PNT-1) UNLESS OTHERWISE INDICATED. ALL HOLLOW METAL DOORS AND DOOR FRAMES TO BE PAINTED (PNT-5). ALL GWB & EXPOSED CEILINGS TO BE PAINTED (PNT-6).

K. ALL WINDOW SILLS TO BE SOLID SURFACE (SS-2).

L. ALL SHOWER FLOORS AND SHOWER WALLS TO BE SOLID SURFACE (SS-3).

M. ALL INTERIOR WOOD DOORS TO BE (WD-1).

N. ALL STAIRS, STAIR LANDINGS, AND EXTERIOR FLOORING SURFACES TO RECEIVE EPOXY RESINOUS FLOOR FINISH (RES-2). STAIR STRINGERS TO RECEIVE PAINT FINISH (PNT-7). SEE DETAIL A3/1-202.

O. EXTERIOR WALLS MUST BE CLEANED AND REPAINTED TO MATCH EXISTING CONDITIONS.

P. LVT FLOORING COVERAGE INCLUDES THE ENTIRETY OF EACH SLEEPING ROOM ALL THE WAY UP TO THE DOORWAY INTO THE TOILET/SHOWER COMPARTMENT. SEE ENLARGED PLAN B5/I-401.

Q. SEE I-601 FOR FINISH LEGEND.

CASEWORK NOTES

1. CASEWORK CONSTRUCTION AS INDICATED IN THE DOCUMENTS MUST BE IN ACCORDANCE WITH A.W.I. QUALITY STANDARDS FOR FLUSH OVERLAY CONSTRUCTION. SEMI-EXPOSED SURFACES TO BE CONSTRUCTED USING CUSTOM GRADE STANDARDS
2. ALL CASEWORK MUST BE IN COMPLIANCE WITH UFGS SECTION 06 41 16.0 AND SECTION 06 61 1.
3. ALL COUNTERTOP AND BACK/SIDE SPLASHES TO BE SOLID SURFACE (SS-1). BACK/SIDE SPLASHES ARE ONLY TO BE APPLIED AT WALLS WITHOUT FULL HEIGHT SPLASH OR TILE.
4. ALL BASE CABINETS, WALL CABINETS, APRONS AND SHROUDS WILL BE PLASTIC LAMINATE (PLAM-1).
5. ALL BASE CABINET TOE KICKS WILL BE RUBBER BASE (RB-1).
6. SEE SHEET I-601 FOR FINISH LEGEND.

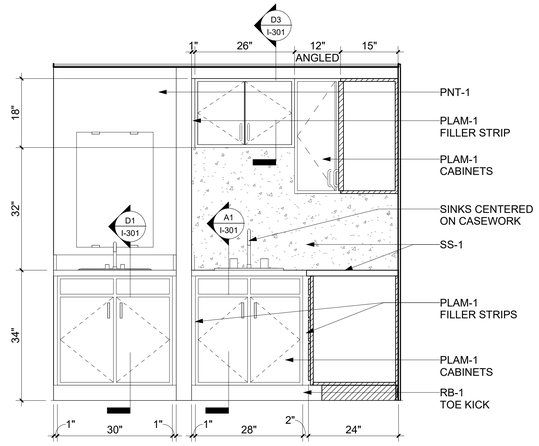

C1 TYP. BATHROOM VANITY & KITCHENETTE
SCALE: 3/4" = 1'-0"

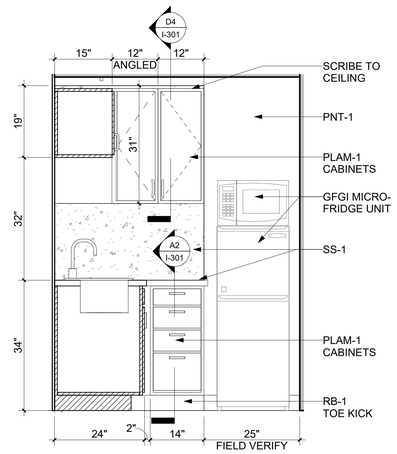

C2 TYP. KITCHENETTE
SCALE: 3/4" = 1'-0"

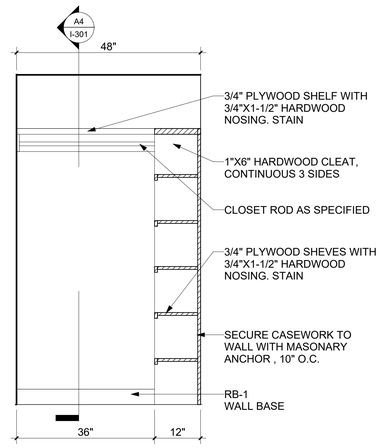

C3 TYP. CLOSET ROD
SCALE: 3/4" = 1'-0"

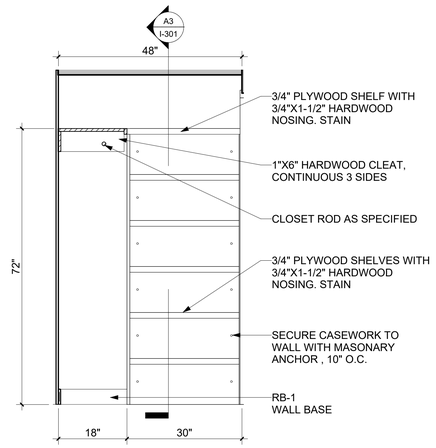

C4 TYP. CLOSET CASEWORK
SCALE: 3/4" = 1'-0"

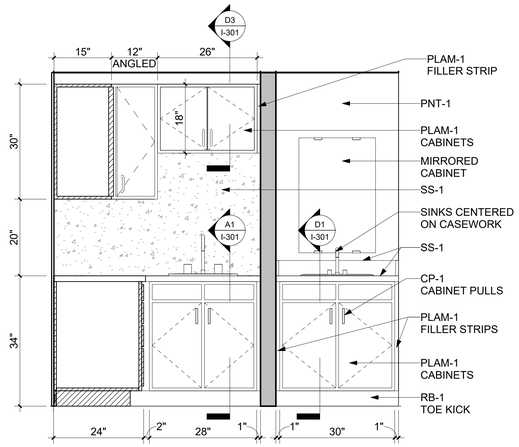

A1 TYP. BATHROOM VANITY & KITCHENETTE
SCALE: 3/4" = 1'-0"

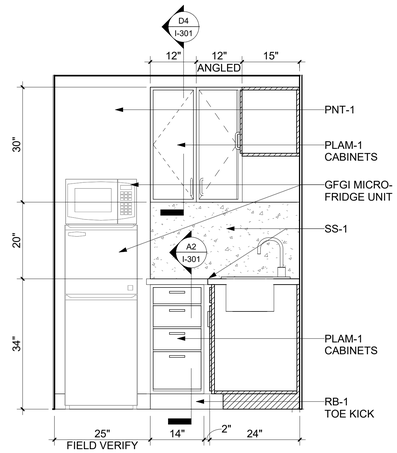

A2 TYP. KITCHENETTE
SCALE: 3/4" = 1'-0"

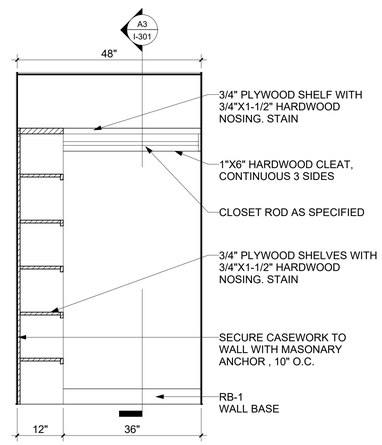

A3 TYP. CLOSET ROD
SCALE: 3/4" = 1'-0"

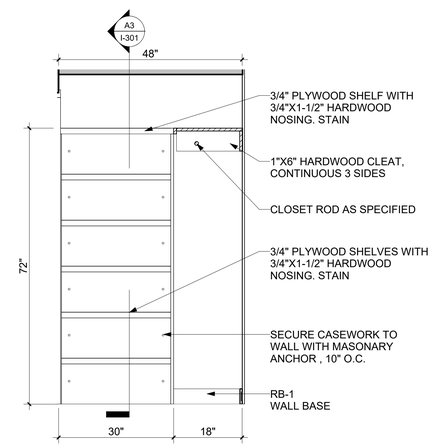

A4 TYP. CLOSET CASEWORK
SCALE: 3/4" = 1'-0"

GRAPHIC SCALE:
3/4" =1'-0" 0' 1' 2' 3'

COMMONWEALTH OF VIRGINIA
JOHN D. KISSEL
CERTIFIED INTERIOR DESIGNER
5/13/26

within INTERIOR DESIGN
1008 GRANBY STREET
NORFOLK, VA 23510
757-394-0484

MBFA NO:

MBF ARCHITECTS, P.A.
CERT. NO. 50679
NEW BERN N.C.

DES. JDK
DR. APG
CHK. JDK
SUBMITTED BY:
DESIGN DIR. CHRIS MAAS
APPROVED: PWO OR OICC DATE
SATISFACTORY TO: DATE

I-201

DEPARTMENT OF THE NAVY NAVAL FACILITIES ENGINEERING SYSTEMS COMMAND

MARINE CORPS BASE
CAMP LEJEUNE, NORTH CAROLINA

REPAIR BEQ FC555

INTERIOR ELEVATIONS

SIZE	CODE IDENT. NO.	NAVFAC DRAWING NO.
E1	80091	60042665
		CONSTR. CONTR. NO. : N40085-25-B-0009

SCALE AS NOTED SPEC. 05-25-0009 SHEET 77 OF 203

File Path: W:\2513 FC555 BEQ Renovation CLI\Revit\2502B FC555 WID R23.rvt
Print Date: 5/8/2026 3:42:29 PM

REVISIONS			
SYM.	DESCRIPTION	DATE	APP.

FINISH NOTES

A. FINISHES INDICATED ARE THE APPROVED BASIS OF DESIGN TO CONVEY COLOR, PATTERN, TEXTURE AND SALIENT CHARACTERISTICS ONLY. THE LISTING OF MANUFACTURER INFORMATION IS NOT INTENDED TO LIMIT THE SELECTION OF PRODUCTS PROVIDED BY OTHER MANUFACTURERS. PRODUCTS MEETING THESE CRITERIA WILL BE CONSIDERED AND MUST BE REVIEWED BY THE INTERIOR DESIGNER OF RECORD (IDOR) AND THE NAVFAC INTERIOR DESIGNER AND APPROVED BY THE CONTRACTING OFFICER.

B. FINISH ITEMS ARE NOT TO BE SUBSTITUTED DUE TO ORDERING LEAD TIMES. IT IS THE CONTRACTOR'S RESPONSIBILITY TO ORDER ALL MATERIALS IN TIME TO AVOID DELAYS.

C. COORDINATE THERMOSTAT LOCATIONS WITH MECHANICAL DRAWINGS AND CONSTRUCTION MANAGER. INSTALL THERMOSTATS NEAR A CORNER OF THE ROOM OR BY LIGHT SWITCHES. DO NOT INSTALL THERMOSTATS IN THE CENTER OF A WALL.

FINISH NOTES

D. ALL INTERIOR FINISHES IN VERTICAL EXIT WAYS, EXIT LOBBIES, AND EXIT CORRIDORS MUST MEET MINIMUM CLASS A RATING.

E. ALL MATERIALS/PRODUCTS ARE TO BE INSTALLED PER MANUFACTURER'S INSTALLATION REQUIREMENTS

F. SPRAY PAINT ELECTRICAL PANELS, ACCESS PANELS, AND EXPANSION JOINTS TO MATCH THE ADJACENT WALL COLOR. PANELS PAINTED BY BRUSH ARE NOT ACCEPTABLE

G. ALL FLOORING TRANSITIONS MUST MEET ABA GUIDELINES. FLOORING TRANSITIONS OCCURRING UNDER DOORS MUST BE CENTERED UNDER DOOR.

H. ROOMS IDENTIFIED TO RECEIVE TILE ON WALLS MUST INCLUDE METAL TRANSITIONS ON ALL OUTSIDE AND INSIDE CORNERS AS WELL AS THE INTERSECTION BETWEEN FLOOR AND WALL TILE WHERE APPLICABLE FOR A COMPLETE INSTALLATION.

I. ALL AREAS TO RECEIVE RESILIENT BASE (RB-1) WITH THE EXCEPTION OF AREAS RECEIVING FLOOR TILE OR EPOXY RESINOUS FLOORING.

FINISH NOTES

J. ALL WALLS TO BE PAINTED (PNT-1) UNLESS OTHERWISE INDICATED. ALL HOLLOW METAL DOORS AND DOOR FRAMES TO BE PAINTED (PNT-5). ALL GWB & EXPOSED CEILINGS TO BE PAINTED (PNT-6).

K. ALL WINDOW SILLS TO BE SOLID SURFACE (SS-2).

L. ALL SHOWER FLOORS AND SHOWER WALLS TO BE SOLID SURFACE (SS-3).

M. ALL INTERIOR WOOD DOORS TO BE (WD-1).

N. ALL STAIRS, STAIR LANDINGS, AND EXTERIOR FLOORING SURFACES TO RECEIVE EPOXY RESINOUS FLOOR FINISH (RES-2). STAIR STRINGERS TO RECEIVE PAINT FINISH (PNT-7). SEE DETAIL A3/1-202.

O. EXTERIOR WALLS MUST BE CLEANED AND REPAINTED TO MATCH EXISTING CONDITIONS.

P. LVT FLOORING COVERAGE INCLUDES THE ENTIRETY OF EACH SLEEPING ROOM ALL THE WAY UP TO THE DOORWAY INTO THE TOILET/SHOWER COMPARTMENT. SEE ENLARGED PLAN B5/I-401.

Q. SEE I-601 FOR FINISH LEGEND.

CASEWORK NOTES

1. CASEWORK CONSTRUCTION AS INDICATED IN THE DOCUMENTS MUST BE IN ACCORDANCE WITH A.W.I. QUALITY STANDARDS FOR FLUSH OVERLAY CONSTRUCTION. SEMI-EXPOSED SURFACES TO BE CONSTRUCTED USING CUSTOM GRADE STANDARDS
2. ALL CASEWORK MUST BE IN COMPLIANCE WITH UFGS SECTION 06 41 16.0 AND SECTION 06 61 1.
3. ALL COUNTERTOP AND BACK/SIDE SPLASHES TO BE SOLID SURFACE (SS-1). BACK/SIDE SPLASHES ARE ONLY TO BE APPLIED AT WALLS WITHOUT FULL HEIGHT SPLASH OR TILE.
4. ALL BASE CABINETS, WALL CABINETS, APRONS AND SHROUDS WILL BE PLASTIC LAMINATE (PLAM-1).
5. ALL BASE CABINET TOE KICKS WILL BE RUBBER BASE (RB-1).
6. SEE SHEET I-601 FOR FINISH LEGEND.

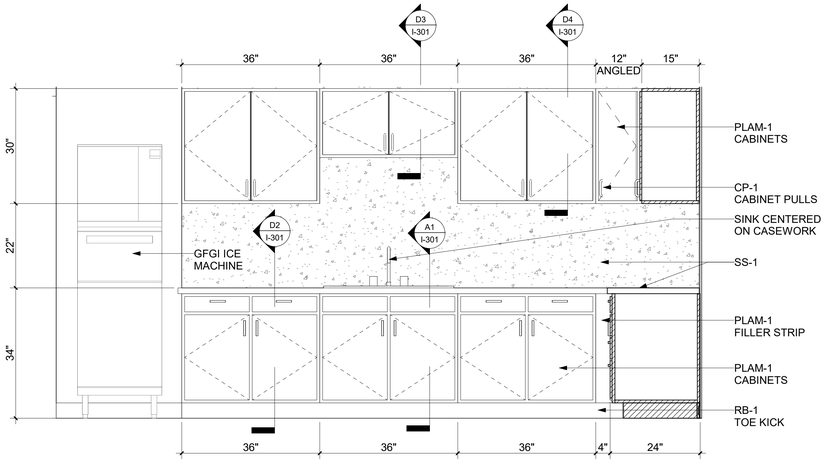

C1 COMMON KITCHEN 116 ELEVATION
SCALE: 3/4" = 1'-0"

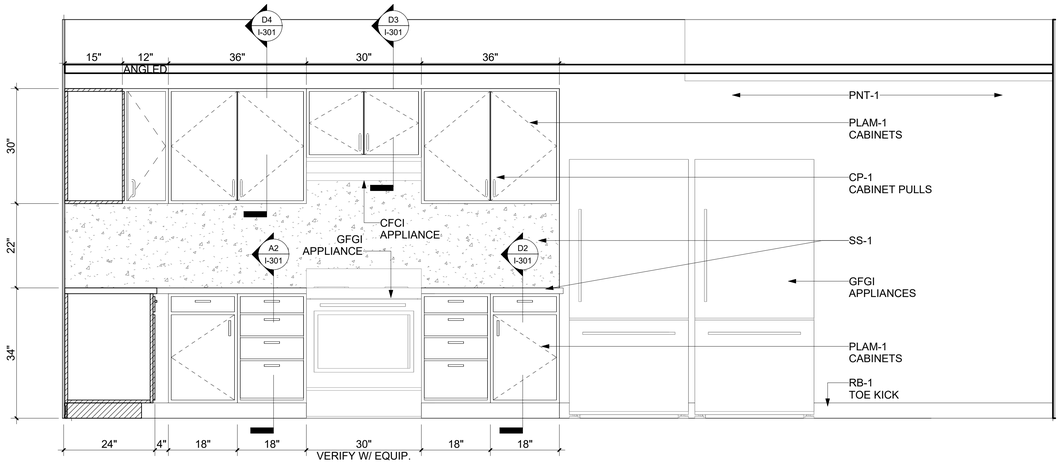

C3 COMMON KITCHEN 116 ELEVATION
SCALE: 3/4" = 1'-0"

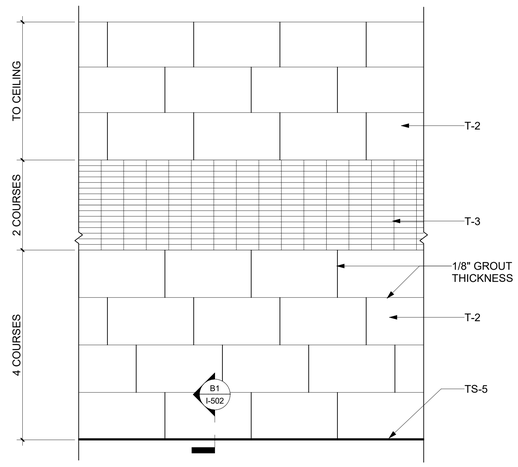

A1 TYP. RESTROOM TILE ELEVATION
SCALE: 3/4" = 1'-0"

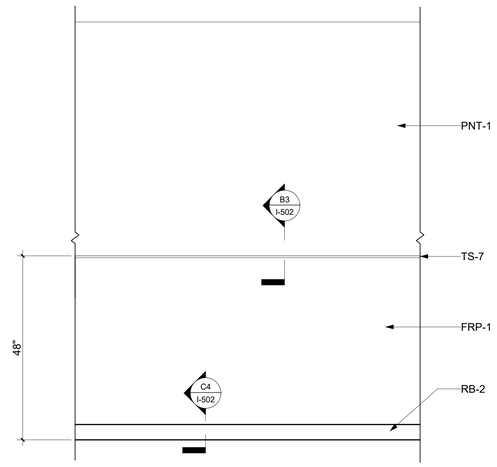

A2 TYP. JANITOR FRP ELEVATION
SCALE: 3/4" = 1'-0"

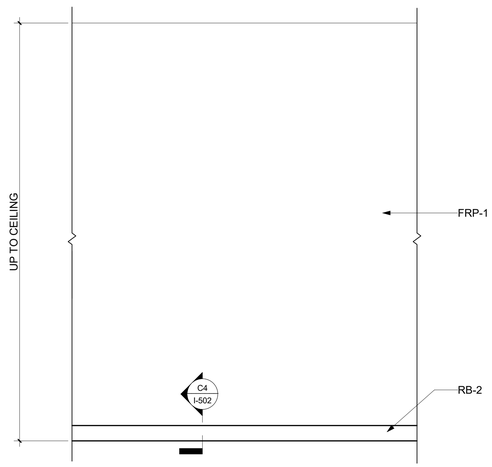

A3 TYP.DRYER CHASE ELEVATION
SCALE: 3/4" = 1'-0"

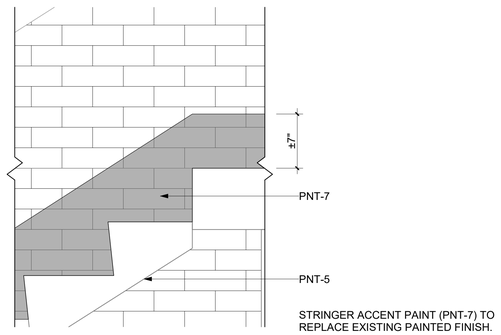

A4 STAIR STRINGER PAINT DETAIL
SCALE: 1 1/2" = 1'-0"

GRAPHIC SCALE:

3/4" =1'-0" 0' 1' 2' 3'

1 1/2" =1'-0" 0' 4" 8" 1'-4"

COMMONWEALTH OF VIRGINIA
JOSE D. KISSEL
5/13/26
CERTIFIED INTERIOR DESIGNER

within INTERIOR DESIGN
1008 GRANBY STREET
NORFOLK, VA 23510
757-222-6455

MBFA NO.:

DES. JDK
DR. APG
CHK. JDK
SUBMITTED BY:
DESIGN DIR. CHRIS MAAS
APPROVED: PWO OR OICC DATE
SATISFACTORY TO: DATE

MBC ARCHITECTS P.A.
CERT. NO. 50679
NEW BERN, N.C.

I-202

DEPARTMENT OF THE NAVY NAVAL FACILITIES ENGINEERING SYSTEMS COMMAND

MARINE CORPS BASE
CAMP LEJEUNE, NORTH CAROLINA

REPAIR BEQ FC555

INTERIOR ELEVATIONS

SIZE E1 | CODE IDENT. NO. 80091 | NAVFAC DRAWING NO. 60042666
CONSTR. CONTR. NO. : N40085-25-B-0009
SCALE AS NOTED | SPEC. 05-25-0009 | SHEET 78 OF 203

File Path: W:\2513 FC555 BEQ Renovation CL\Revit\2502B FC555 WID R23.rvt
Print Date: 5/12/2026 2:21:10 PM

REVISIONS			
SYM.	DESCRIPTION	DATE	APP.

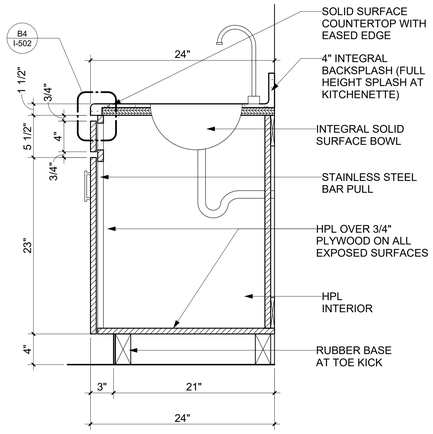

D1 SECTION - RESTROOM SINK CABINET

SCALE: 1 1/2" = 1'-0"

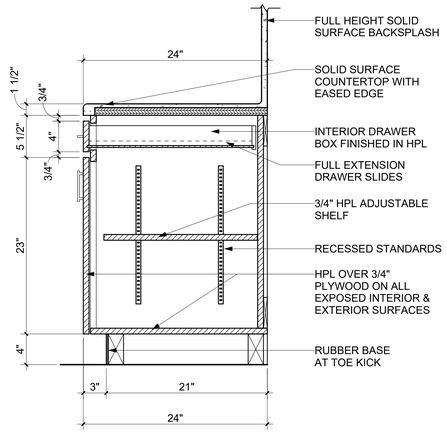

D2 SECTION - DOOR/DRAWER BASE CAB.

SCALE: 1 1/2" = 1'-0"

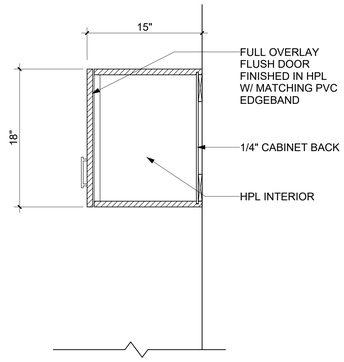

D3 SECTION - UPPER CABINET 18"H

SCALE: 1 1/2" = 1'-0"

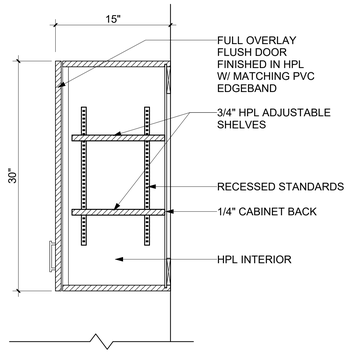

D4 SECTION - UPPER CABINET 30"H

SCALE: 1 1/2" = 1'-0"

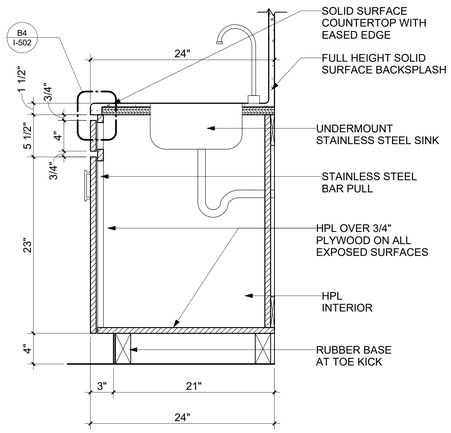

A1 SECTION - SINK CABINET

SCALE: 1 1/2" = 1'-0"

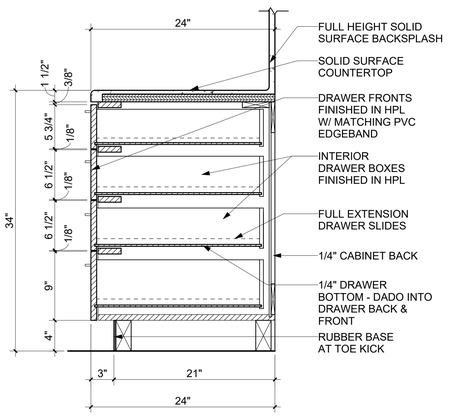

A2 SECTION - 4 DRAWER BASE CAB.

SCALE: 1 1/2" = 1'-0"

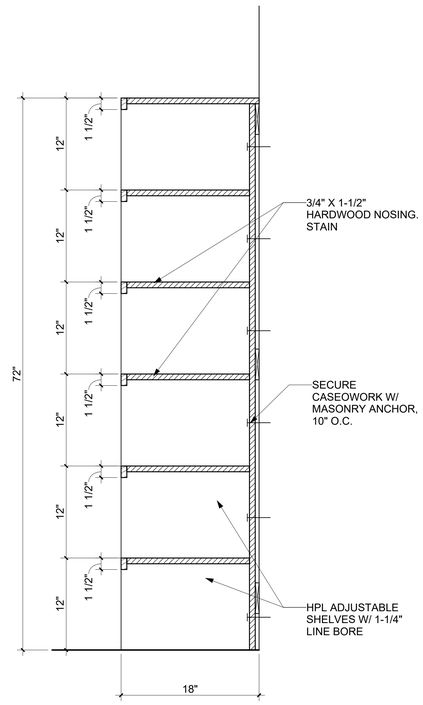

A3 SECTION - CLOSET SHELVING

SCALE: 1 1/2" = 1'-0"

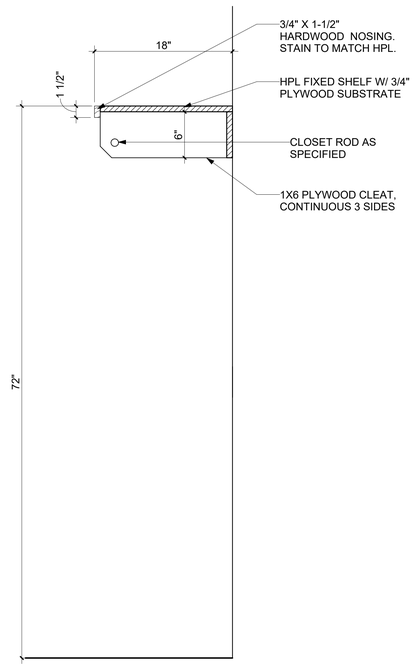

A4 SECTION - CLOSET HANGING ROD

SCALE: 1 1/2" = 1'-0"

CASEWORK NOTES

1. CASEWORK CONSTRUCTION AS INDICATED IN THE DOCUMENTS MUST BE IN ACCORDANCE WITH A.W.I. QUALITY STANDARDS FOR FLUSH OVERLAY CONSTRUCTION. SEMI-EXPOSED SURFACES TO BE CONSTRUCTED USING CUSTOM GRADE STANDARDS
2. ALL CASEWORK MUST BE IN COMPLIANCE WITH UFGS SECTION 06 41 16.0 AND SECTION 06 61 1.
3. ALL COUNTERTOP AND BACK/SIDE SPLASHES TO BE SOLID SURFACE (SS-1). BACK/SIDE SPLASHES ARE ONLY TO BE APPLIED AT WALLS WITHOUT FULL HEIGHT SPLASH OR TILE.
4. ALL BASE CABINETS, WALL CABINETS, APRONS AND SHROUDS WILL BE PLASTIC LAMINATE (PLAM-1).
5. ALL BASE CABINET TOE KICKS WILL BE RUBBER BASE (RB-1).
6. SEE SHEET I-601 FOR FINISH LEGEND.

GRAPHIC SCALE:

1 1/2" =1'-0" 0' 4" 8" 1'-4"

COMMONWEALTH OF VIRGINIA
JAMIE D. KISSEL
5/13/26
CERTIFIED INTERIOR DESIGNER

within INTERIOR DESIGN
1008 GRANBY STREET
NORFOLK, VA 23510
757-314-0484

MBFA NO.:

NBK ARCHITECTS PA
CERT. NO. 50679
NORTH CAROLINA
NEW BERN N.C.

DES. JDK
DR. APG
CHK. JDK
SUBMITTED BY:
DESIGN DIR. CHRIS MAAS
APPROVED: PWO OR OICC DATE
SATISFACTORY TO: DATE

I-301

DEPARTMENT OF THE NAVY NAVAL FACILITIES ENGINEERING SYSTEMS COMMAND

MARINE CORPS BASE

CAMP LEJEUNE, NORTH CAROLINA

REPAIR BEQ FC555

CASEWORK SECTIONS

SIZE	CODE IDENT. NO.	NAVFAC DRAWING NO.
E1	80091	60042667

CONSTR. CONTR. NO. : N40085-25-B-0009

SCALE AS NOTED SPEC. 05-25-0009 SHEET 79 OF 203

File Path: W:\2513 FC555 BEQ Renovation CL\Revit\2502B FC555 WID R23.rvt
Print Date: 5/8/2026 3:42:31 PM

FINISH NOTES

A. FINISHES INDICATED ARE THE APPROVED BASIS OF DESIGN TO CONVEY COLOR, PATTERN, TEXTURE AND SALIENT CHARACTERISTICS ONLY. THE LISTING OF MANUFACTURER INFORMATION IS NOT INTENDED TO LIMIT THE SELECTION OF PRODUCTS PROVIDED BY OTHER MANUFACTURERS. PRODUCTS MEETING THESE CRITERIA WILL BE CONSIDERED AND MUST BE REVIEWED BY THE INTERIOR DESIGNER OF RECORD (IDOR) AND THE NAVFAC INTERIOR DESIGNER AND APPROVED BY THE CONTRACTING OFFICER.

B. FINISH ITEMS ARE NOT TO BE SUBSTITUTED DUE TO ORDERING LEAD TIMES. IT IS THE CONTRACTOR'S RESPONSIBILITY TO ORDER ALL MATERIALS IN TIME TO AVOID DELAYS.

C. COORDINATE THERMOSTAT LOCATIONS WITH MECHANICAL DRAWINGS AND CONSTRUCTION MANAGER. INSTALL THERMOSTATS NEAR A CORNER OF THE ROOM OR BY LIGHT SWITCHES. DO NOT INSTALL THERMOSTATS IN THE CENTER OF A WALL.

FINISH NOTES

D. ALL INTERIOR FINISHES IN VERTICAL EXIT WAYS, EXIT LOBBIES, AND EXIT CORRIDORS MUST MEET MINIMUM CLASS A RATING.

E. ALL MATERIALS/PRODUCTS ARE TO BE INSTALLED PER MANUFACTURER'S INSTALLATION REQUIREMENTS

F. SPRAY PAINT ELECTRICAL PANELS, ACCESS PANELS, AND EXPANSION JOINTS TO MATCH THE ADJACENT WALL COLOR. PANELS PAINTED BY BRUSH ARE NOT ACCEPTABLE

G. ALL FLOORING TRANSITIONS MUST MEET ABA GUIDELINES. FLOORING TRANSITIONS OCCURRING UNDER DOORS MUST BE CENTERED UNDER DOOR.

H. ROOMS IDENTIFIED TO RECEIVE TILE ON WALLS MUST INCLUDE METAL TRANSITIONS ON ALL OUTSIDE AND INSIDE CORNERS AS WELL AS THE INTERSECTION BETWEEN FLOOR AND WALL TILE WHERE APPLICABLE FOR A COMPLETE INSTALLATION.

I. ALL AREAS TO RECEIVE RESILIENT BASE (RB-1) WITH THE EXCEPTION OF AREAS RECEIVING FLOOR TILE OR EPOXY RESINOUS FLOORING.

FINISH NOTES

J. ALL WALLS TO BE PAINTED (PNT-1) UNLESS OTHERWISE INDICATED. ALL HOLLOW METAL DOORS AND DOOR FRAMES TO BE PAINTED (PNT-5). ALL GWB & EXPOSED CEILINGS TO BE PAINTED (PNT-6).

K. ALL WINDOW SILLS TO BE SOLID SURFACE (SS-2).

L. ALL SHOWER FLOORS AND SHOWER WALLS TO BE SOLID SURFACE (SS-3).

M. ALL INTERIOR WOOD DOORS TO BE (WD-1).

N. ALL STAIRS, STAIR LANDINGS, AND EXTERIOR FLOORING SURFACES TO RECEIVE EPOXY RESINOUS FLOOR FINISH (RES-2). STAIR STRINGERS TO RECEIVE PAINT FINISH (PNT-7). SEE DETAIL A3/1-202.

O. EXTERIOR WALLS MUST BE CLEANED AND REPAINTED TO MATCH EXISTING CONDITIONS.

P. LVT FLOORING COVERAGE INCLUDES THE ENTIRETY OF EACH SLEEPING ROOM ALL THE WAY UP TO THE DOORWAY INTO THE TOILET/SHOWER COMPARTMENT. SEE ENLARGED PLAN B5/I-401.

Q. SEE I-601 FOR FINISH LEGEND.

FLOOR FINISH KEY

- LVT-1
- RES-1
- RES-2
- SC-1
- T-1
- T-4

REVISIONS

SYM.	DESCRIPTION	DATE	APP.

***HATCH PATTERN DOES NOT INDICATE DIRECTION OR METHOD OF FLOORING INSTALLATION.

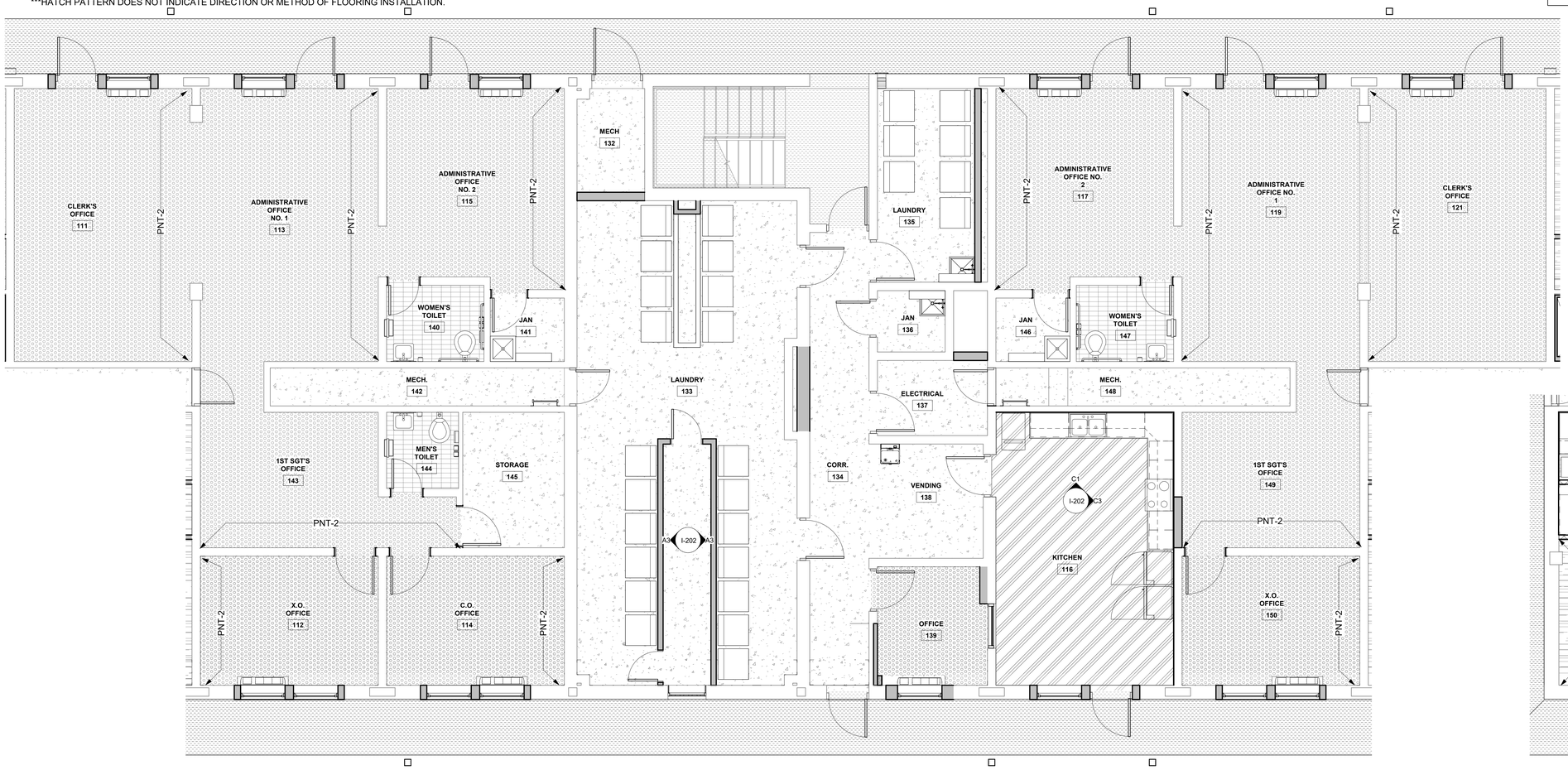

B1 ENLARGED 1ST FLOOR COMMON AREA FINISH PLAN

SCALE: 1/4" = 1'-0"

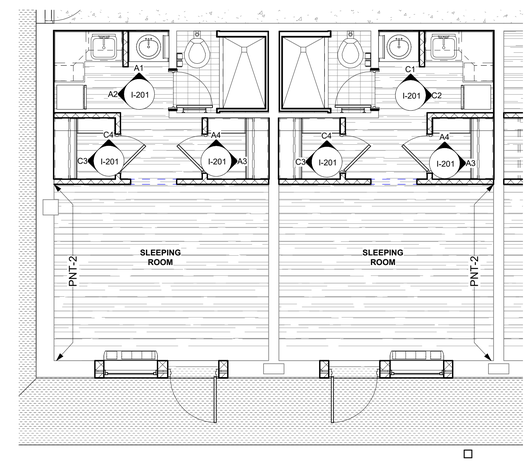

B5 ENLARGED SLEEPING ROOMS FINISH PLAN

SCALE: 1/4" = 1'-0"

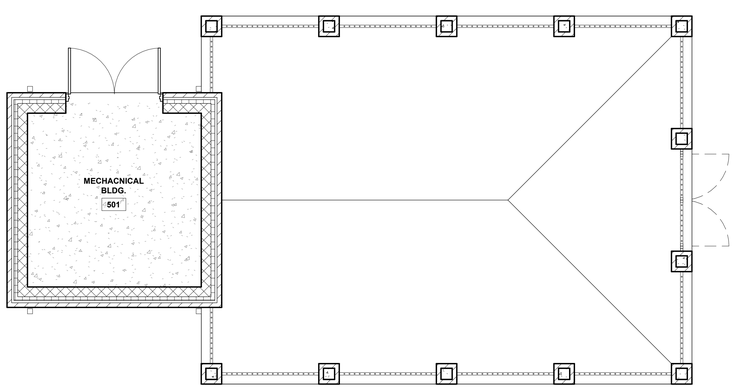

A1 ENLARGED MECHANICAL BLDG. 556A FINISH PLAN

SCALE: 1/4" = 1'-0"

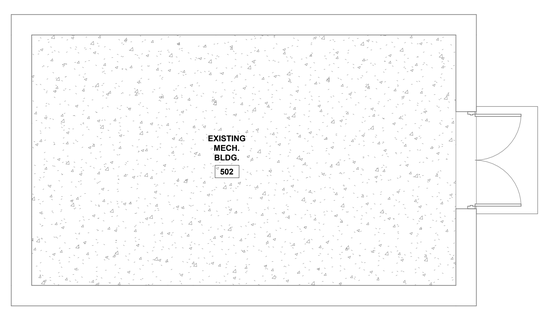

A2 ENLARGED MECHANICAL BLDG. 555A FINISH PLAN

SCALE: 1/4" = 1'-0"

GRAPHIC SCALE:

1/4" =1'-0" 0' 2' 4' 8'

3/8" =1'-0" 0' 2' 4' 6'

COMMONWEALTH OF VIRGINIA JAMIE D. KISSEL 5/13/26 CERTIFIED INTERIOR DESIGNER

MBFA NO.:

within INTERIOR DESIGN 1008 GRANBY STREET NORFOLK, VA 23510 757-994-0484

NBC ARCHITECTS PA REGISTERED ARCHITECTURAL CORPORATION CERT. NO. 50679 NORTH CAROLINA NEW BERN N.C.

DES. JDK
DR. APG
CHK. JDK
SUBMITTED BY:
DESIGN DIR. CHRIS MAAS
APPROVED: PWO OR OICC DATE
SATISFACTORY TO: DATE

I-401

DEPARTMENT OF THE NAVY NAVAL FACILITIES ENGINEERING SYSTEMS COMMAND

MARINE CORPS BASE

CAMP LEJEUNE, NORTH CAROLINA

REPAIR BEQ FC555

ENLARGED FINISH PLANS

SIZE E1 | CODE IDENT. NO. 80091 | NAVFAC DRAWING NO. 60042668

CONSTR. CONTR. NO. : N40085-25-B-0009

SCALE AS NOTED | SPEC. 05-25-0009 | SHEET 80 OF 203

File Path: W:\2513 FC555 BEQ Renovation CL\Revit\2502B FC555 WID R23.rvt
Print Date: 5/8/2026 3:42:33 PM

REVISIONS			
SYM.	DESCRIPTION	DATE	APP.

SIGNAGE SCHEDULE

TYPE	DESCRIPTION	QTY
S1	SLEEPING QUARTERS IDENTIFICATION SIGN	80
S2	PERMANENT ROOM IDENTIFICATION SIGN	37
S3	NON-PERMANENT ROOM IDENTIFICATION SIGN	3
S4	STAIRWELL LEVEL INDICATOR	9
S5M	MENS RESTROOM IDENTIFICATION SIGN	1
S5W	WOMENS RESTROOM IDENTIFICATION SIGN	2
S6	SMALL DIRECTIONAL SIGN	11
S7	EXTERIOR ROOM SIGN	13
S8	STAIRWELL IDENTIFICATION SIGN	10

SIGNAGE NOTES

A. ALL SIGNAGE TO COMPLY WITH UFC 3 120 01.
B. ALL SIGN TYPES, TEXT WORDING, AND ROOM NUMBERS TO BE VERIFIED WITH END USER AND REVIEWED BY NAVFAC INTERIOR DESIGNER PRIOR TO FABRICATION.
C. ALL GRADE 2 BRAILLE TO BE TACTILE RAISED 0.8 MM FROM THE SURFACE WITH ROUNDED DOTS.
D. SIGNS MUST USE HIGH CONTRAST, NON-GLARE FINISHES. CHARACTERS MUST BE UPPER CASE AND USE SANS SERIF FONTS.
E. SIGNS MUST INCLUDE CLEAR VISUAL ELEMENTS FOR INDIVIDUALS WITH LOW VISION, BLINDNESS AND COGNITIVE DISABILITIES.
F. SIGNS THAT MOUNT TO GLASS MUST INCLUDE AN EQUALLY SIZED BLANK SIGN PANEL ALIGNED TO OPPOSITE SIDE OF THE GLASS.
G. REFER TO SHEET I-501 FOR SIGNAGE DETAILS.
H. REFER TO SHEET I-601 FINISH LEGEND FOR SIGNAGE FINISHES.
I. MOUNTING OF SIGNAGE SYSTEM MUST INCLUDE SURFACE MOUNTING WITH SCREW-ON APPLICATION FOR INTERIOR WALLS.
J. SEE ELEVATION I-501 FOR MOUNTING HEIGHT OF ACRYLIC SIGNAGE.

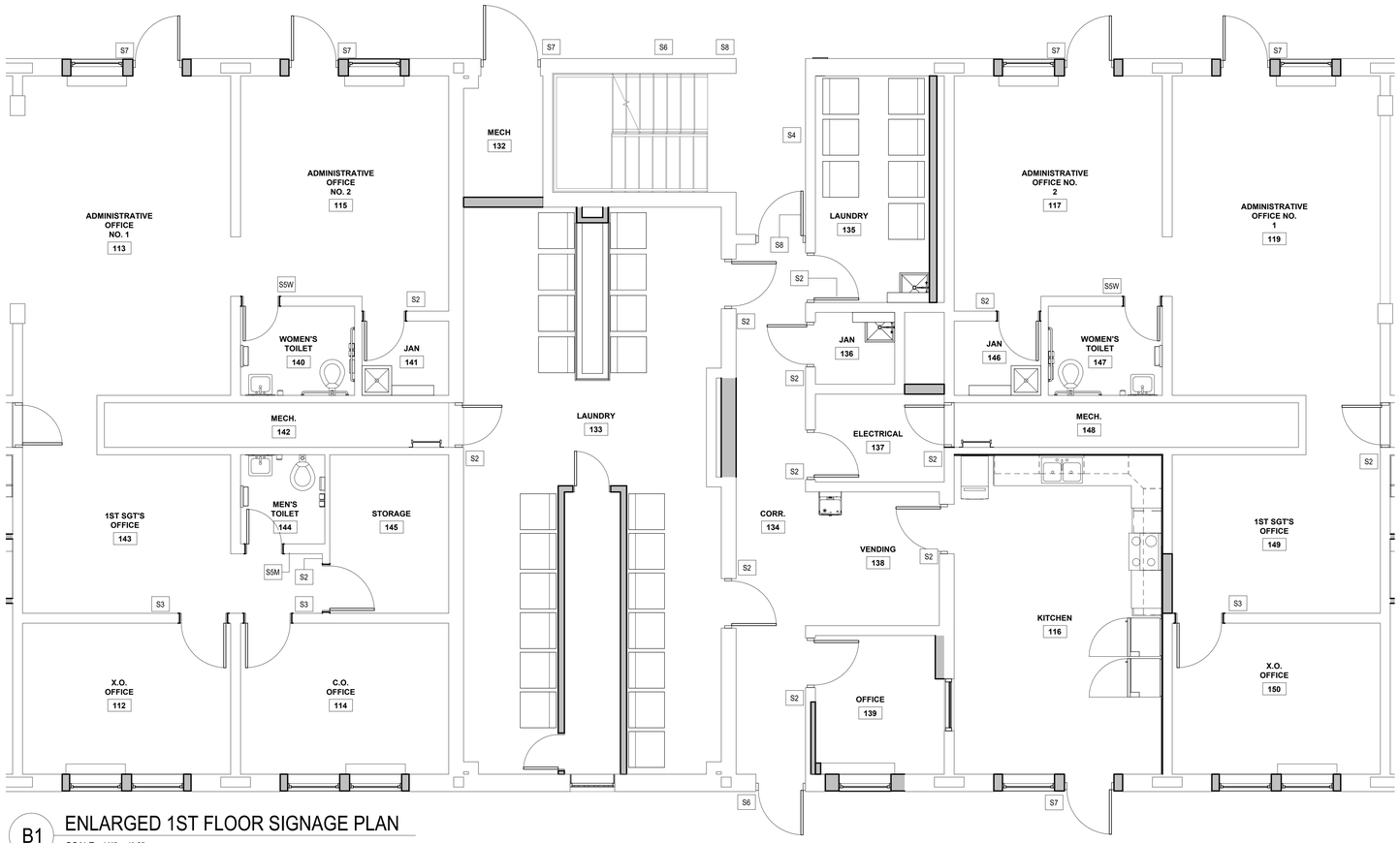

B1 ENLARGED 1ST FLOOR SIGNAGE PLAN
SCALE: 1/4" = 1'-0"

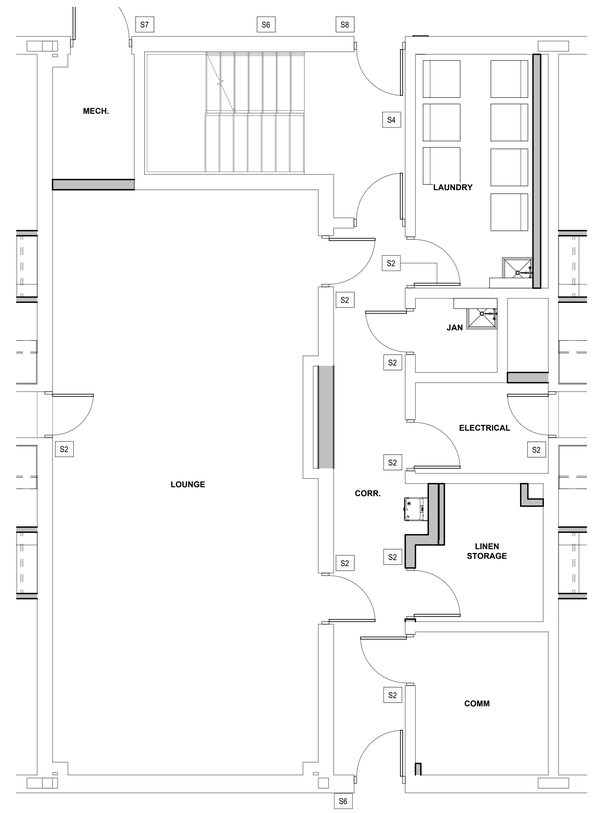

B5 ENLARGED 2ND & 3RD FLOOR SIGNAGE PLAN
SCALE: 1/4" = 1'-0"

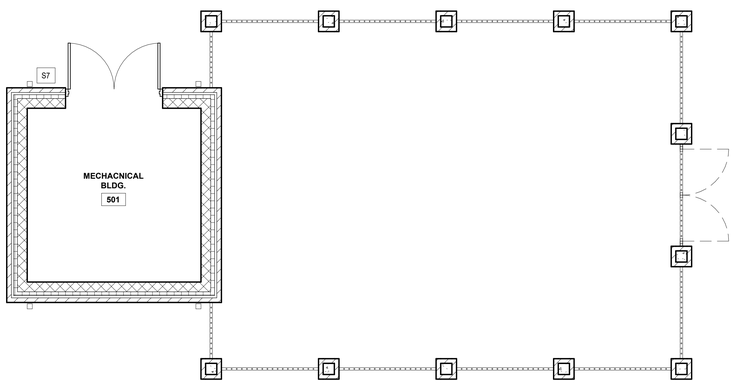

A1 ENLARGED MECHANICAL BLDG. 556A SIGNAGE PLAN
SCALE: 1/4" = 1'-0"

A2 ENLARGED MECHANICAL BLDG. 555A SIGNAGE PLAN
SCALE: 1/4" = 1'-0"

GRAPHIC SCALE:
1/4" =1'-0" 0' 2' 4' 8'

COMMONWEALTH OF VIRGINIA
JOHN D. KISSEL
LICENSED INTERIOR DESIGNER
5/13/26

within INTERIOR DESIGN
1008 GRANBY STREET
NORFOLK, VA 23510
757-314-0484

MBFA NO.:

MSF ARCHITECTS, P.A.
CERT. NO. 50679
NEW BERN NC

DES. JDK
DR. APG
CHK. JDK
SUBMITTED BY:
DESIGN DIR. CHRIS MAAS
APPROVED: PWO OR OICC DATE
SATISFACTORY TO: DATE

DEPARTMENT OF THE NAVY NAVAL FACILITIES ENGINEERING SYSTEMS COMMAND

MARINE CORPS BASE
CAMP LEJEUNE, NORTH CAROLINA

REPAIR BEQ FC555

ENLARGED SIGNAGE PLANS

SIZE E1 | CODE IDENT. NO. 80091 | NAVFAC DRAWING NO. 60042669
CONSTR. CONTR. NO. : N40085-25-B-0009
SCALE AS NOTED | SPEC. 05-25-0009 | SHEET 81 OF 203

I-402

File Path: W:\2513 FC555 BEQ Renovation CLI\Revit\2502B FC555 WID R23.rvt
Print Date: 5/8/2026 3:42:35 PM

REVISIONS			
SYM.	DESCRIPTION	DATE	APP.

SIGNAGE SCHEDULE

TYPE	DESCRIPTION	QTY
S1	SLEEPING QUARTERS IDENTIFICATION SIGN	80
S2	PERMANENT ROOM IDENTIFICATION SIGN	37
S3	NON-PERMANENT ROOM IDENTIFICATION SIGN	3
S4	STAIRWELL LEVEL INDICATOR	9
S5M	MENS RESTROOM IDENTIFICATION SIGN	1
S5W	WOMENS RESTROOM IDENTIFICATION SIGN	2
S6	SMALL DIRECTIONAL SIGN	11
S7	EXTERIOR ROOM SIGN	13
S8	STAIRWELL IDENTIFICATION SIGN	10

SIGNAGE NOTES

A. ALL SIGNAGE TO COMPLY WITH UFC 3 120 01.
B. ALL SIGN TYPES, TEXT WORDING, AND ROOM NUMBERS TO BE VERIFIED WITH END USER AND REVIEWED BY NAVFAC INTERIOR DESIGNER PRIOR TO FABRICATION.
C. ALL GRADE 2 BRAILLE TO BE TACTILE RAISED 0.8 MM FROM THE SURFACE WITH ROUNDED DOTS.
D. SIGNS MUST USE HIGH CONTRAST, NON-GLARE FINISHES. CHARACTERS MUST BE UPPER CASE AND USE SANS SERIF FONTS.
E. SIGNS MUST INCLUDE CLEAR VISUAL ELEMENTS FOR INDIVIDUALS WITH LOW VISION, BLINDNESS AND COGNITIVE DISABILITIES.
F. SIGNS THAT MOUNT TO GLASS MUST INCLUDE AN EQUALLY SIZED BLANK SIGN PANEL ALIGNED TO OPPOSITE SIDE OF THE GLASS.
G. REFER TO SHEET I-501 FOR SIGNAGE DETAILS.
H. REFER TO SHEET I-601 FINISH LEGEND FOR SIGNAGE FINISHES.
I. MOUNTING OF SIGNAGE SYSTEM MUST INCLUDE SURFACE MOUNTING WITH SCREW-ON APPLICATION FOR INTERIOR WALLS.
J. SEE ELEVATION I-501 FOR MOUNTING HEIGHT OF ACRYLIC SIGNAGE.

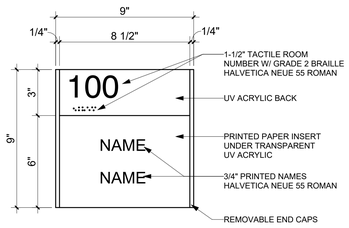

S1

SLEEPING QUARTERS IDENTIFICATION SIGN

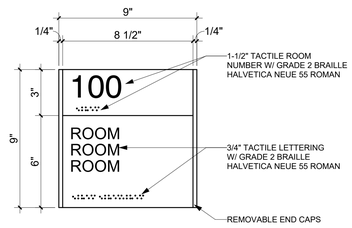

S2

PERMANENT ROOM IDENTIFICATION SIGN

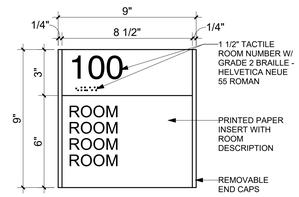

S3

NON-PERMANENT ROOM IDENTIFICATION SIGN

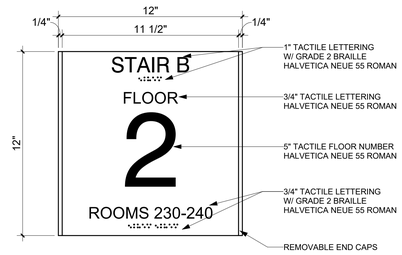

S4

STAIRWELL LEVEL INDICATOR

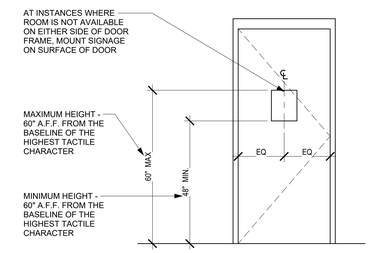

C5 TYP. DOOR MOUNTED SIGNAGE LOCATION

SCALE: 1/2" = 1'-0"

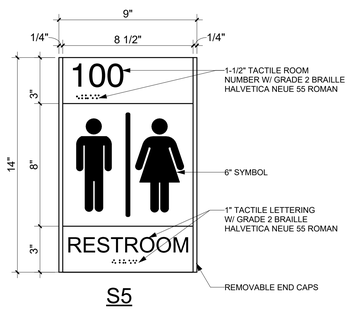

S5

UNISEX RESTROOM IDENTIFICATION SIGN

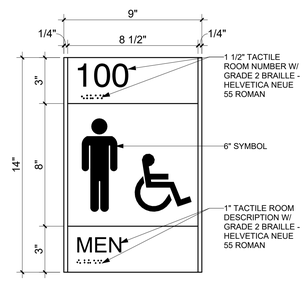

S5M

MENS RESTROOM IDENTIFICATION SIGN

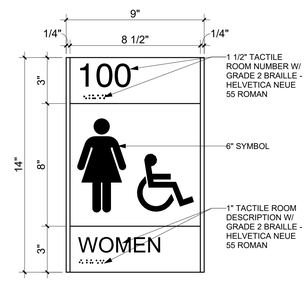

S5W

WOMENS RESTROOM IDENTIFICATION SIGN

B5 TYP. WALL MOUNTED SIGNAGE LOCATION

SCALE: 1/2" = 1'-0"

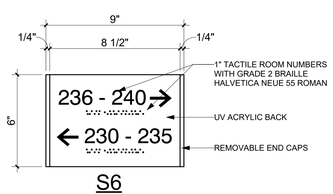

S6

SMALL DIRECTIONAL SIGN

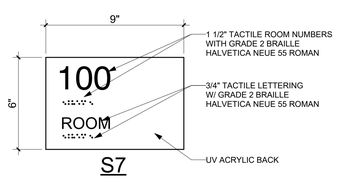

S7

EXTERIOR ROOM SIGN

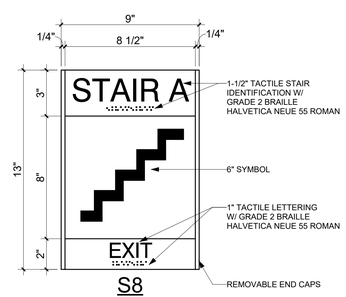

S8

STAIRWELL IDENTIFICATION SIGN

B1 SIGNAGE TYPICALS

SCALE: 3" = 1'-0"

GRAPHIC SCALE:

1/2" =1'-0" 0' 1' 2' 4'

3" =1'-0" 0' 3" 6" 9"

COMMONWEALTH OF VIRGINIA CERTIFIED INTERIOR DESIGNER JOHN D. KIDD 5/13/26

within INTERIOR DESIGN 1008 GRANBY STREET NORFOLK, VA 23510 757-624-0484

MBFA NO:

MSF ARCHITECTS, P.A. NORTH CAROLINA ARCHITECTURE FIRM CERT. NO. 50679 NEW BERN, NC

DES.	JDK
DR.	APG
CHK.	JDK
SUBMITTED BY:	
DESIGN DIR.	CHRIS MAAS
APPROVED: PWO OR OICC	DATE
SATISFACTORY TO:	DATE

I-501

DEPARTMENT OF THE NAVY NAVAL FACILITIES ENGINEERING SYSTEMS COMMAND

MARINE CORPS BASE

CAMP LEJEUNE, NORTH CAROLINA

REPAIR BEQ FC555

SIGNAGE DETAILS

SIZE	CODE IDENT. NO.	NAVFAC DRAWING NO.
E1	80091	60042670
		CONSTR. CONTR. NO. : N40085-25-B-0009
SCALE AS NOTED	SPEC. 05-25-0009	SHEET 82 OF 203

File Path: W:\2513 FC555 BEQ Renovation CLI\Revit\2502B FC555 WID R23.rvt
Print Date: 5/8/2026 3:42:36 PM

REVISIONS			
SYM.	DESCRIPTION	DATE	APP.

FINISH NOTES

A. FINISHES INDICATED ARE THE APPROVED BASIS OF DESIGN TO CONVEY COLOR, PATTERN, TEXTURE AND SALIENT CHARACTERISTICS ONLY. THE LISTING OF MANUFACTURER INFORMATION IS NOT INTENDED TO LIMIT THE SELECTION OF PRODUCTS PROVIDED BY OTHER MANUFACTURERS. PRODUCTS MEETING THESE CRITERIA WILL BE CONSIDERED AND MUST BE REVIEWED BY THE INTERIOR DESIGNER OF RECORD (IDOR) AND THE NAVFAC INTERIOR DESIGNER AND APPROVED BY THE CONTRACTING OFFICER.

B. FINISH ITEMS ARE NOT TO BE SUBSTITUTED DUE TO ORDERING LEAD TIMES. IT IS THE CONTRACTOR'S RESPONSIBILITY TO ORDER ALL MATERIALS IN TIME TO AVOID DELAYS.

C. COORDINATE THERMOSTAT LOCATIONS WITH MECHANICAL DRAWINGS AND CONSTRUCTION MANAGER. INSTALL THERMOSTATS NEAR A CORNER OF THE ROOM OR BY LIGHT SWITCHES. DO NOT INSTALL THERMOSTATS IN THE CENTER OF A WALL.

FINISH NOTES

D. ALL INTERIOR FINISHES IN VERTICAL EXIT WAYS, EXIT LOBBIES, AND EXIT CORRIDORS MUST MEET MINIMUM CLASS A RATING.

E. ALL MATERIALS/PRODUCTS ARE TO BE INSTALLED PER MANUFACTURER'S INSTALLATION REQUIREMENTS

F. SPRAY PAINT ELECTRICAL PANELS, ACCESS PANELS, AND EXPANSION JOINTS TO MATCH THE ADJACENT WALL COLOR. PANELS PAINTED BY BRUSH ARE NOT ACCEPTABLE

G. ALL FLOORING TRANSITIONS MUST MEET ABA GUIDELINES. FLOORING TRANSITIONS OCCURRING UNDER DOORS MUST BE CENTERED UNDER DOOR.

H. ROOMS IDENTIFIED TO RECEIVE TILE ON WALLS MUST INCLUDE METAL TRANSITIONS ON ALL OUTSIDE AND INSIDE CORNERS AS WELL AS THE INTERSECTION BETWEEN FLOOR AND WALL TILE WHERE APPLICABLE FOR A COMPLETE INSTALLATION.

I. ALL AREAS TO RECEIVE RESILIENT BASE (RB-1) WITH THE EXCEPTION OF AREAS RECEIVING FLOOR TILE OR EPOXY RESINOUS FLOORING.

FINISH NOTES

J. ALL WALLS TO BE PAINTED (PNT-1) UNLESS OTHERWISE INDICATED. ALL HOLLOW METAL DOORS AND DOOR FRAMES TO BE PAINTED (PNT-5). ALL GWB & EXPOSED CEILINGS TO BE PAINTED (PNT-6).

K. ALL WINDOW SILLS TO BE SOLID SURFACE (SS-2).

L. ALL SHOWER FLOORS AND SHOWER WALLS TO BE SOLID SURFACE (SS-3).

M. ALL INTERIOR WOOD DOORS TO BE (WD-1).

N. ALL STAIRS, STAIR LANDINGS, AND EXTERIOR FLOORING SURFACES TO RECEIVE EPOXY RESINOUS FLOOR FINISH (RES-2). STAIR STRINGERS TO RECEIVE PAINT FINISH (PNT-7). SEE DETAIL A3/1-202.

O. EXTERIOR WALLS MUST BE CLEANED AND REPAINTED TO MATCH EXISTING CONDITIONS.

P. LVT FLOORING COVERAGE INCLUDES THE ENTIRETY OF EACH SLEEPING ROOM ALL THE WAY UP TO THE DOORWAY INTO THE TOILET/SHOWER COMPARTMENT. SEE ENLARGED PLAN B5/I-401.

Q. SEE I-601 FOR FINISH LEGEND.

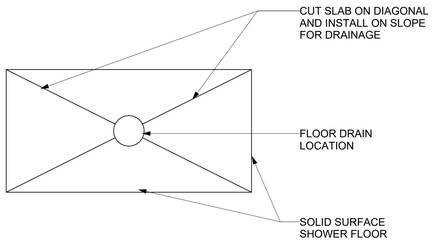

C1 FLOOR DRAIN DETAIL
SCALE: 3" = 1'-0"

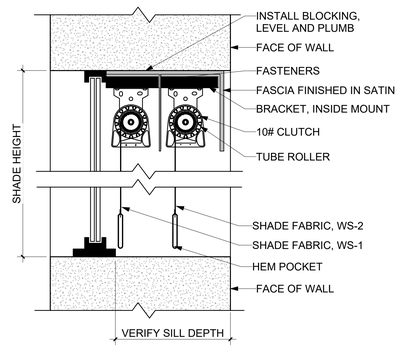

C2 DOUBLE ROLLER SHADE DETAIL
SCALE: 3" = 1'-0"

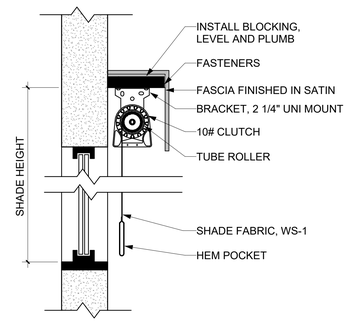

C3 SINGLE ROLLER SHADE DETAIL
SCALE: 3" = 1'-0"

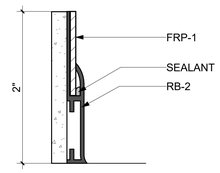

C4 FRP TO RUBBER BASE
SCALE: 12" = 1'-0"

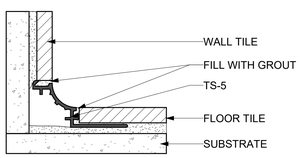

B1 INSIDE CORNER TILE DETAIL
SCALE: 12" = 1'-0"

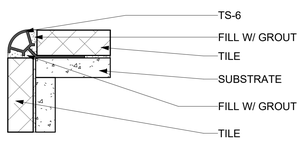

B2 OUTSIDE CORNER TILE DETAIL
SCALE: 12" = 1'-0"

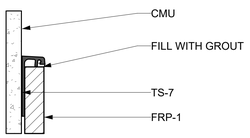

B3 FRP TO CMU DETAIL
SCALE: 12" = 1'-0"

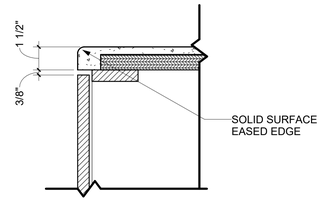

B4 COUNTER EDGE DETAIL
SCALE: 3" = 1'-0"

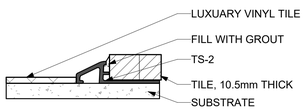

A1 LVT TO TILE DETAIL
SCALE: 12" = 1'-0"

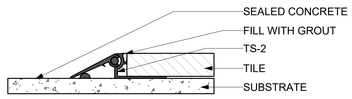

A2 CONCRETE FLOORING TO TILE DETAIL
SCALE: 12" = 1'-0"

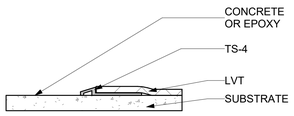

A3 LVT TO CONCRETE OR EPOXY DETAIL
SCALE: 12" = 1'-0"

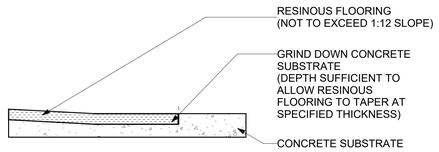

A4 EPOXY FLOOR TO CONCRETE DETAIL
SCALE: 12" = 1'-0"

GRAPHIC SCALE:

3" =1'-0" 0' 3" 6" 9"

12" = 1'-0" 0" 1/2" 1" 3"

COMMONWEALTH OF VIRGINIA
JOHN D. KISSEL
CERTIFIED INTERIOR DESIGNER
5/13/26

MSF ARCHITECTS, P.A.
CERT. NO. 50679
NEW BERN, NC

I-502

within INTERIOR DESIGN
1008 GRANBY STREET
NORFOLK, VA 23510
757-314-0484

MBFA NO.:

DEPARTMENT OF THE NAVY NAVAL FACILITIES ENGINEERING SYSTEMS COMMAND

MARINE CORPS BASE

CAMP LEJEUNE, NORTH CAROLINA

REPAIR BEQ FC555

INTERIOR DETAILS

DES. JDK
DR. APG
CHK. JDK
SUBMITTED BY:
DESIGN DIR. CHRIS MAAS
APPROVED: PWO OR OICC DATE
SATISFACTORY TO: DATE

SIZE	CODE IDENT. NO.	NAVFAC DRAWING NO.
E1	80091	60042671
		CONSTR. CONTR. NO. : N40085-25-B-0009
SCALE AS NOTED	SPEC. 05-25-0009	SHEET 83 OF 203

File Path: W:\2513 FC555 BEQ Renovation CLI\Revit\2502B FC555 WID R23.rvt
Print Date: 5/6/2026 3:42:37 PM

REVISIONS			
SYM.	DESCRIPTION	DATE	APP.

FINISH NOTES

A. FINISHES INDICATED ARE THE APPROVED BASIS OF DESIGN TO CONVEY COLOR, PATTERN, TEXTURE AND SALIENT CHARACTERISTICS ONLY. THE LISTING OF MANUFACTURER INFORMATION IS NOT INTENDED TO LIMIT THE SELECTION OF PRODUCTS PROVIDED BY OTHER MANUFACTURERS. PRODUCTS MEETING THESE CRITERIA WILL BE CONSIDERED AND MUST BE REVIEWED BY THE INTERIOR DESIGNER OF RECORD (IDOR) AND THE NAVFAC INTERIOR DESIGNER AND APPROVED BY THE CONTRACTING OFFICER.

B. FINISH ITEMS ARE NOT TO BE SUBSTITUTED DUE TO ORDERING LEAD TIMES. IT IS THE CONTRACTOR'S RESPONSIBILITY TO ORDER ALL MATERIALS IN TIME TO AVOID DELAYS.

C. COORDINATE THERMOSTAT LOCATIONS WITH MECHANICAL DRAWINGS AND CONSTRUCTION MANAGER. INSTALL THERMOSTATS NEAR A CORNER OF THE ROOM OR BY LIGHT SWITCHES. DO NOT INSTALL THERMOSTATS IN THE CENTER OF A WALL.

FINISH NOTES

D. ALL INTERIOR FINISHES IN VERTICAL EXIT WAYS, EXIT LOBBIES, AND EXIT CORRIDORS MUST MEET MINIMUM CLASS A RATING.

E. ALL MATERIALS/PRODUCTS ARE TO BE INSTALLED PER MANUFACTURER'S INSTALLATION REQUIREMENTS

F. SPRAY PAINT ELECTRICAL PANELS, ACCESS PANELS, AND EXPANSION JOINTS TO MATCH THE ADJACENT WALL COLOR. PANELS PAINTED BY BRUSH ARE NOT ACCEPTABLE

G. ALL FLOORING TRANSITIONS MUST MEET ABA GUIDELINES. FLOORING TRANSITIONS OCCURRING UNDER DOORS MUST BE CENTERED UNDER DOOR.

H. ROOMS IDENTIFIED TO RECEIVE TILE ON WALLS MUST INCLUDE METAL TRANSITIONS ON ALL OUTSIDE AND INSIDE CORNERS AS WELL AS THE INTERSECTION BETWEEN FLOOR AND WALL TILE WHERE APPLICABLE FOR A COMPLETE INSTALLATION.

I. ALL AREAS TO RECEIVE RESILIENT BASE (RB-1) WITH THE EXCEPTION OF AREAS RECEIVING FLOOR TILE OR EPOXY RESINOUS FLOORING.

FINISH NOTES

J. ALL WALLS TO BE PAINTED (PNT-1) UNLESS OTHERWISE INDICATED. ALL HOLLOW METAL DOORS AND DOOR FRAMES TO BE PAINTED (PNT-5). ALL GWB & EXPOSED CEILINGS TO BE PAINTED (PNT-6).

K. ALL WINDOW SILLS TO BE SOLID SURFACE (SS-2).

L. ALL SHOWER FLOORS AND SHOWER WALLS TO BE SOLID SURFACE (SS-3).

M. ALL INTERIOR WOOD DOORS TO BE (WD-1).

N. ALL STAIRS, STAIR LANDINGS, AND EXTERIOR FLOORING SURFACES TO RECEIVE EPOXY RESINOUS FLOOR FINISH (RES-2). STAIR STRINGERS TO RECEIVE PAINT FINISH (PNT-7). SEE DETAIL A3/1-202.

O. EXTERIOR WALLS MUST BE CLEANED AND REPAINTED TO MATCH EXISTING CONDITIONS.

P. LVT FLOORING COVERAGE INCLUDES THE ENTIRETY OF EACH SLEEPING ROOM ALL THE WAY UP TO THE DOORWAY INTO THE TOILET/SHOWER COMPARTMENT. SEE ENLARGED PLAN B5/I-401.

Q. SEE I-601 FOR FINISH LEGEND.

FINISH SCHEDULE NOTES

1. SEE I-201 FOR TYPICAL RESTROOM WALL TILE ELEVATION.
2. FLOOR TILE INSTALLATION TO BE 1/3 OFFSET.
3. WINDOWS TO RECEIVE SINGLE LAYER ROLLER SHADE (WS-1). SEE DETAIL C4/I-502.
4. WINDOWS TO RECEIVE DOUBLE LAYER ROLLER SHADE (WS-1 & WS-2). SEE DETAIL C2/I-502.

ROOM FINISH SCHEDULE

ROOM NO.	ROOM NAME	FLOOR FINISH	BASE FINISH	WALL FINISH	CEILING FINISH	NOTES
106	MECHANICAL	SC-1	RB-1	PNT-1	PNT-6	
111	CLERK'S OFFICE	RES-1	RES-1	PNT-1, PNT-2	ACT-1, PNT-6	
112	X.O. OFFICE	RES-1	RES-1	PNT-1, PNT-2	PNT-6	3
113	ADMINISTRATIVE OFFICE NO. 1	RES-1	RES-1	PNT-1, PNT-2	ACT-1, PNT-6	3
114	C.O. OFFICE	RES-1	RES-1	PNT-1, PNT-2	PNT-6	3
115	ADMINISTRATIVE OFFICE NO. 2	RES-1	RES-1	PNT-1, PNT-2	ACT-1, PNT-6	3
116	KITCHEN	T-4	TB-1	PNT-1, SS-1	ACT-1	3
116	C.O. OFFICE	RES-1	RES-1	PNT-1, PNT-2	PNT-6	3
117	ADMINISTRATIVE OFFICE NO. 2	RES-1	RES-1	PNT-1, PNT-2	ACT-1, PNT-6	3
119	ADMINISTRATIVE OFFICE NO. 1	RES-1	RES-1	PNT-1, PNT-2	ACT-1, PNT-6	3
121	CLERK'S OFFICE	RES-1	RES-1	PNT-1, PNT-2	ACT-1, PNT-6	3
124	MECHANICAL	SC-1	RB-1	PNT-1	PNT-6	
132	MECH	SC-1	RB-1	PNT-1	PNT-6	
133	LAUNDRY	SC-1	RB-1	PNT-1	ACT-1, PNT-6	
134	CORR.	SC-1	RB-1	PNT-1	PNT-6	
135	LAUNDRY	SC-1	RB-1	PNT-1	PNT-6	
136	JAN	SC-1	RB-2	PNT-1, FRP-1	PNT-6	1,2
137	ELECTRICAL	SC-1	RB-1	PNT-1	PNT-6	
137	ELECTRICAL	SC-1	RB-1	PNT-1	PNT-6	
138	VENDING	SC-1	RB-1	PNT-1	PNT-6	
139	OFFICE	RES-1	RES-1	PNT-1, PNT-2	PNT-6	3
140	WOMEN'S TOILET	T-1	-	T-2, T-3	PNT-6	1,2
141	JAN	SC-1	RB-2	PNT-1, FRP-1	PNT-6	
142	MECH.	SC-1	RB-1	PNT-1	PNT-6	
143	1ST SGT'S OFFICE	RES-1	RES-1	PNT-1, PNT-2	ACT-1	
144	MEN'S TOILET	T-1	-	T-2, T-3	PNT-6	1,2
145	STORAGE	SC-1	RB-1	PNT-1	PNT-6	
146	JAN	SC-1	RB-2	PNT-1, FRP-1	PNT-6	
147	WOMEN'S TOILET	T-1	-	T-2, T-3	PNT-6	1,2
148	MECH.	SC-1	RB-1	PNT-1	PNT-6	
149	1ST SGT'S OFFICE	RES-1	RES-1	PNT-1, PNT-2	ACT-1	
150	X.O. OFFICE	RES-1	RES-1	PNT-1, PNT-2	PNT-6	3
150	MEN'S TOILET	T-1	-	T-2, T-3	PNT-6	1,2
152	MECH.	SC-1	RB-1	PNT-1	PNT-6	
153	MECH.	SC-1	RB-1	PNT-1	PNT-6	
206	MECHANICAL	SC-1	RB-1	PNT-1	PNT-6	
224	MECHANICAL	SC-1	RB-1	PNT-1	PNT-6	
232	MECH.	SC-1	RB-1	PNT-1	PNT-6	
233	LOUNGE	RES-1	RES-1	PNT-1, WG-1	ACT-1, PNT-6	
234	CORR.	SC-1	RB-1	PNT-1	PNT-6	
235	LAUNDRY	SC-1	RB-1	PNT-1	PNT-6	
236	JAN	SC-1	RB-2	PNT-1, FRP-1	PNT-6	1,2
237	ELECTRICAL	SC-1	RB-1	PNT-1	PNT-6	
238	LINEN STORAGE	SC-1	RB-1	PNT-1	PNT-6	
239	COMM	SC-1	RB-1	PNT-1	PNT-6	
252	MECH.	SC-1	RB-1	PNT-1	PNT-6	
260	MECH.	SC-1	RB-1	PNT-1	PNT-6	
306	MECHANICAL	SC-1	RB-1	PNT-1	PNT-6	
315	MECH.	SC-1	RB-1	PNT-1	PNT-6	
324	MECHANICAL	SC-1	RB-1	PNT-1	PNT-6	
332	MECH.	SC-1	RB-1	PNT-1	PNT-6	
333	LOUNGE	RES-1	RES-1	PNT-1, WG-1	ACT-1, PNT-6	
334	CORR.	SC-1	RB-1	PNT-1	PNT-6	
335	LAUNDRY	SC-1	RB-1	PNT-1	PNT-6	
336	JAN	SC-1	RB-2	PNT-1, FRP-1	PNT-6	1,2
337	ELECTRICAL	SC-1	RB-1	PNT-1	PNT-6	
338	LINEN STORAGE	SC-1	RB-1	PNT-1	PNT-6	
339	OFFICE	SC-1	RB-1	PNT-1	PNT-6	
360	MECH.	SC-1	RB-1	PNT-1	PNT-6	
501	MECHACNICAL BLDG.	SC-1	RB-1	PNT-1	PNT-6	
502	EXISTING MECH. BLDG.	SC-1	RB-1	PNT-1	PNT-6	
TYP.	TYPICAL SLEEPING ROOM	LVT-1	RB-1	PNT-1, PNT-2	PNT-6	4
TYP.	TYPICAL SHOWER	T-1	-	T-2, T-3	PNT-6	1,2
TYP. EXT.	EXTERIOR WALKWAYS	RES-2	-	-	-	

FINISH LEGEND

NO.	NAME	LOCATION	MANUFACTURER	MODEL	COLOR	SIZE
ACG-1	ACOUSTICAL CEILING GRID	SUSPENDED CEILINGS (ACT-1)	ARMSTRONG	INTERLUDE XL HRC	WHITE	9/16"W
ACT-1	ACOUSTICAL CEILING TILE	NON-GWB OR EXPOSED CEILINGS	ARMSTRONG	FINE FISSURE BEVELED TEGULAR	WHITE	24"x24"
CG-1	CORNER GUARD	GYP WALL OUTSIDE CORNER	INPRO	TYPE 430	STAINLESS STEEL	3" WING - UP TO CEILING
FRP-1	FIBERGLASS REINFORCED PLASTIC	JANITOR ROOM & LAUNDRY DRYER CHASE	MARLITE	PEBBLED	LIGHT GREY	-
GR-1	GROUT	FLOOR TILE (TL-1)	CUSTOM BUILDING PRODUCTS	#370	DOVE GRAY	1/8" THICKNESS
GR-2	GROUT	WALL TILE (T-2 & T-3)	CUSTOM BUILDING PRODUCTS	#644	SHADOW	1/8" THICKNESS
GR-3	GROUT	KITCHEN FLOOR TILE	CUSTOM BUILDING PRODUCTS	# 540	TRUFFLE	3/8" THICKNESS
HW-1	CABINET PULL	CASEWORK DOORS & DRAWERS	HAFELE	101.20.744	STAINLESS STEEL	3" CENTER TO CENTER
LVT-1	LUXURY VINYL TILE	SLEEPING ROOMS	MANNINGTON	CRISSCROSS	ZOOM CHARCOAL	18"X18"
PLAM-1	PLASTIC LAMINATE	CASEWORK	FORMICA	-	BLACKENED LEGNO	-
PNT-1	PAINT	PRIMARY WALLS	BENJAMIN MOORE	1548	CLASSIC GRAY	-
PNT-2	ACCENT PAINT	SLEEPING ROOMS	BENJAMIN MOORE	1552	RIVER REFLECTIONS	-
PNT-5	PAINT	DOOR FRAMES & UNDERSIDE OF STAIRS	SHERWIN WILLIAMS	SW 7026	GRIFFIN	-
PNT-6	PAINT	GWB & EXPOSED CEILINGS	SHERWIN WILLIAMS	SW 7102	WHITE FLOUR	-
PNT-7	ACCENT PAINT	STAIR STRINGER	SHERWIN WILLIAMS	SW 6866	HEARTTHROB	-
RB-1	RUBBER BASE	PRIMARY BASE	JOHNSONITE	TG6	MINK WG	4"
RB-2	RUBBER BASE	JANITOR ROOM	MARLITE	M612	BLACK	4"
RES-1	EPOXY RESINOUS FLOORING	LOUNGE & SHARED SPACES	SHERWIN WILLIAMS	DECO QUARTZ	CATERPILLAR	-
RES-2	NON-SLIP EPOXY RESINOUS COATING	EXTERIOR WALKWAYS	INTERSTATE PRODUCTS, INC.	TRACTION-N-MORE NON-SLIP COATING, TZ-20-22-6	CHAR GREY	-
S-1	SIGNAGE FINISH	FONT	2/90 SYSTEMS	709	CEMENT	-
S-2	SIGNAGE FINISH	BACKGROUND	2/90 SYSTEMS	204	BLACK	-
S-3	SIGNAGE FINISH	END CAPS	2/90 SYSTEMS	-	SATIN ALUMINUM	-
SC-1	SEALED CONCRETE	UTILITY SPACES	SCOFIELD	SELECT SEAL PLUS	CLEAR	-
SS-1	SOLID SURFACE	COUNTERTOPS	CORIAN	-	NEUTRAL AGGREGATE	-
SS-2	SOLID SURFACE	WINDOW SILLS	CORIAN	-	NEUTRAL AGGREGATE	-
SS-3	SOLID SURFACE	SHOWER SURROUNDS	CORIAN	-	GLACIER WHITE	-
T-1	FLOOR TILE	BATHROOM & JANITOR FLOORS	CROSSVILLE	SHADE 2.0	THUNDER	12"X24"
T-2	WALL TILE	BATHROOM & JANITOR WALLS	ATLAS CONCORD	ELEMENT	GRAY	12"X24"
T-3	ACCENT TILE	BATHROOM WALLS	ATLAS CONCORD	ELEMENT	GRAY	12"X12" BRICK MOSAIC
T-4	FLOOR TILE (QUARRY)	KITCHEN	DALTILE	QUARRY	ARID FLASH	8"X8"
TB-1	TILE BASE (QUARRY)	KITCHEN	DALTILE	QUARRY	ARID FLASH	5"X6" COVE BASE
TS-2	TRANSITION STRIP	LVT TO TILE	SCHLUTER	RENO-U AEU 35	SATIN ANODIZED	-
TS-4	TRANSITION STRIP	LVT TO CONCRETE OR EPOXY	SCHLUTER	RENO-U AEU 100	SATIN ANODIZED	-
TS-5	TRANSITION STRIP	TILE INSIDE CORNER	SCHLUTER	DILEX-AHK	SATIN ANODIZED	-
TS-6	TRANSITION STRIP	TILE OUTSIDE CORNER	SCHLUTER	QUADEC	SATIN ANODIZED	-
TS-7	TRANSITION STRIP	FRP TO CMU	SCHLUTER	RONDEC-DB	SATIN ANODIZED	-
WG-1	WALL GRAPHIC	LOBBY & MULTI-PURPOSE ROOM	FIND YOUR LEVEL	LINDSEY II	BEIGE	-
WS-1	WINDOW SHADE	SLEEPING ROOMS	READ WINDOW PRODUCTS	JUMBLE	BEIGE/GRAY	5% OPENNESS
WS-2	WINDOW SHADE	SLEEPING ROOMS	READ WINDOW PRODUCTS	DIFINITIVE	GRAY	BLACKOUT

COMMONWEALTH OF VIRGINIA
JAMIE D. KISSEL
LICENSE NO. 0101-010
5/13/26
CERTIFIED INTERIOR DESIGNER

NBF ARCHITECTS, P.A.
CERT. NO. 50679
NEW BERN, N.C.

I-601

MBFA NO.:

within
INTERIOR DESIGN
1008 GRANBY STREET
NORFOLK, VA 23510
757.394.0489

DEPARTMENT OF THE NAVY — NAVAL FACILITIES ENGINEERING SYSTEMS COMMAND

MARINE CORPS BASE

CAMP LEJEUNE, NORTH CAROLINA

REPAIR BEQ FC555

SCHEDULES & LEGEND

DES. JDK
DR. APG
CHK. JDK
SUBMITTED BY:
DESIGN DIR. CHRIS MAAS
APPROVED: PWO OR OICC — DATE
SATISFACTORY TO: — DATE

SIZE E1 | CODE IDENT. NO. 80091 | NAVFAC DRAWING NO. 60042672
CONSTR. CONTR. NO. : N40085-25-B-0009
SCALE AS NOTED | SPEC. 05-25-0009 | SHEET 84 OF 203

File Path: W:\2513 FC555 BEQ Renovation CLIRewit\2502B FC555 WID R23.rvt
Print Date: 5/8/2026 3:42:38 PM

Finish Boards

within
INTERIOR DESIGN

ACT-1 Acoustical Ceiling Tile
Armstrong
Fine Fissure Beveled Tegular, White

FRP-1 Fiberglass Reinforced Plastic
Marlite
Pebbled, Light Grey

PLAM-1 - Plastic Laminate - Primary Casework
Formica
Blackened Legno

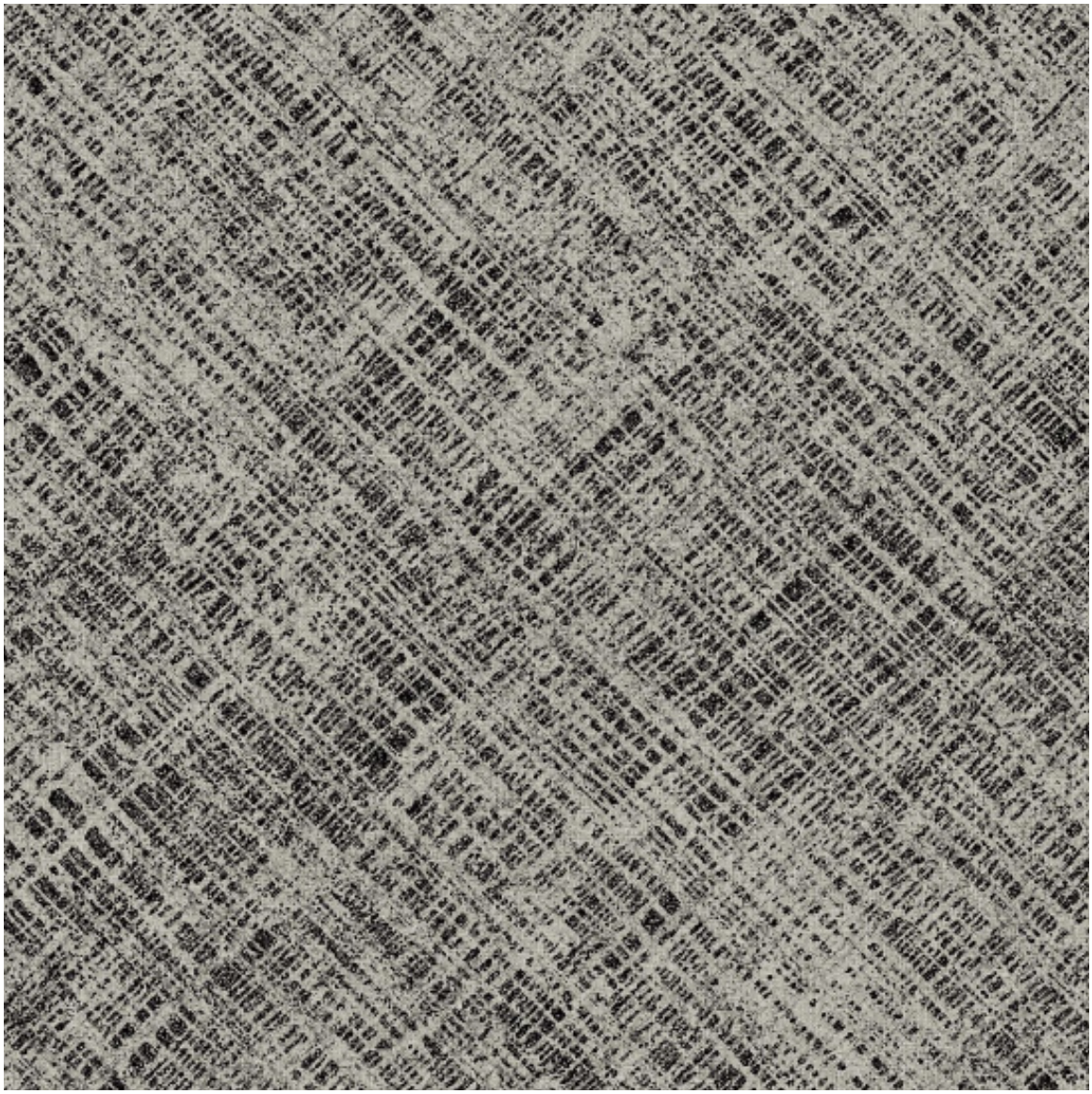

LVT-1 - Luxury Vinyl Tile - Sleeping Rooms
Mannington
Crisscross, Zoom, Charcoal

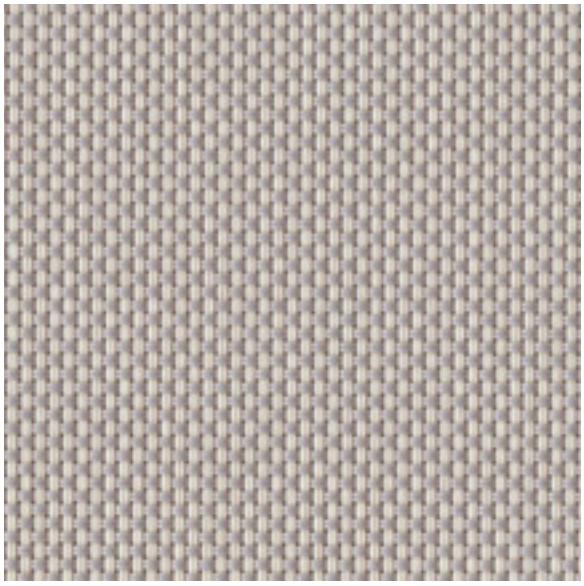

WS-1 - Window Shade - Sleeping Rooms
Read Window Products
Jumble, Beige/Gray, 5% Openness

WS-2 - Window Shade - Sleeping Rooms
Read Window Products
Difinitive, Gray, Blackout

RES-1 - Epoxy Resinous Flooring - Lounge & Shared Spaces
Sherwin Williams
Deco Quartz, Caterpillar

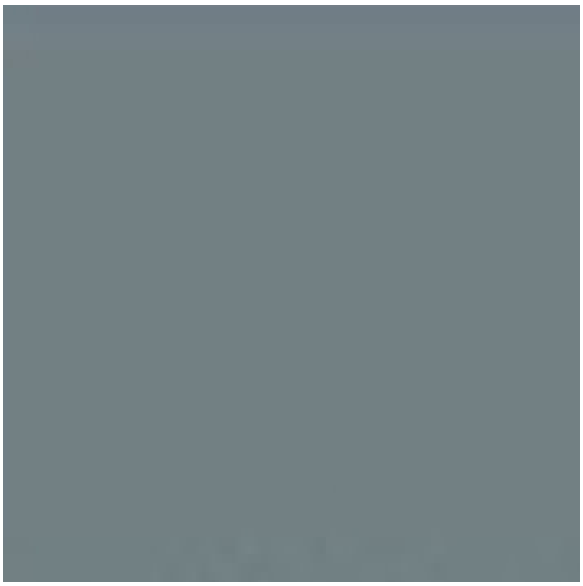

RES-2 - Non-Slip Epoxy Resinous Coating - Exterior Walkways
Interstate Products, Inc
Traction-N-More Non-Slip Coating,
TZ-20-22-6, Char Grey

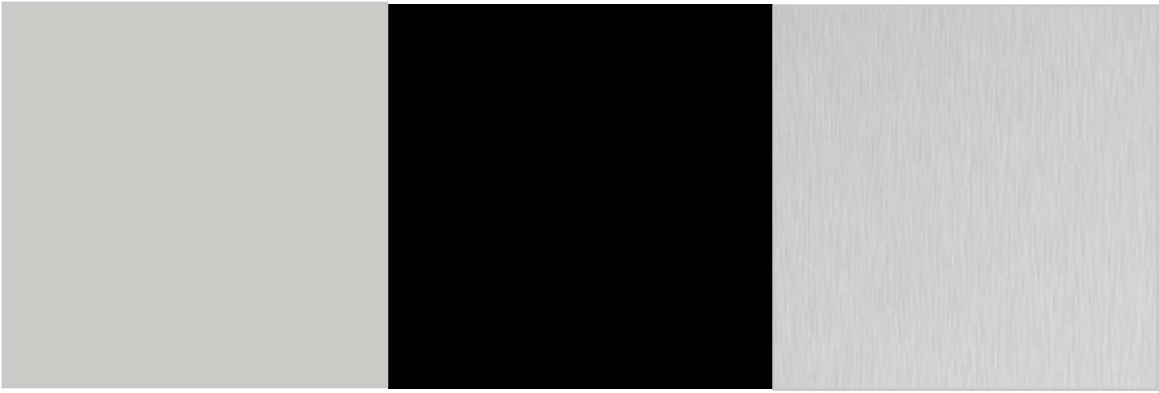

S-1 & S-2 - Signage Finish
2/90 Sign Systems
Font: 709 Cement
Background: 704 Black
Endcaps: Satin Aluminum

WG-1 Wall Graphic - Lounge
Find Your Level
Lingsey II, Beige

PNT-1 - Primary Paint
Benjamin Moore
Classic Grey, 1548

PNT-2 - Accent Paint - Sleeping Rooms
Benjamin Moore
River Reflections, 1552

PNT-5 - Accent Paint - Door Frames & Underside of Stairs
Sherwin Williams
Griffin, SW7026

PNT-6 - GWB & Exposed Ceiling Paint
Sherwin Williams
White Flour, SW7102

GR-1 - Epoxy Grout - Floor Tile
Custom Building Products
Dove Gray, 370

GR-2 - Grout - Wall Tile
Custom Building Products
Shadow, 644

PNT-7- Accent Paint - Stair Stringers
Sherwin Williams
Heartthrob, SW6866

T-1 - Floor Tile - Bathroom & Janitor Floors
Crossville
Shade 2.0, Thunder, 12”x24”

GR-3 - Grout - Wall Tile
Custom Building Products
Truffle, 540

T-2 - Wall Tile - Bathrooms
Atlas Concorde
Element, Gray

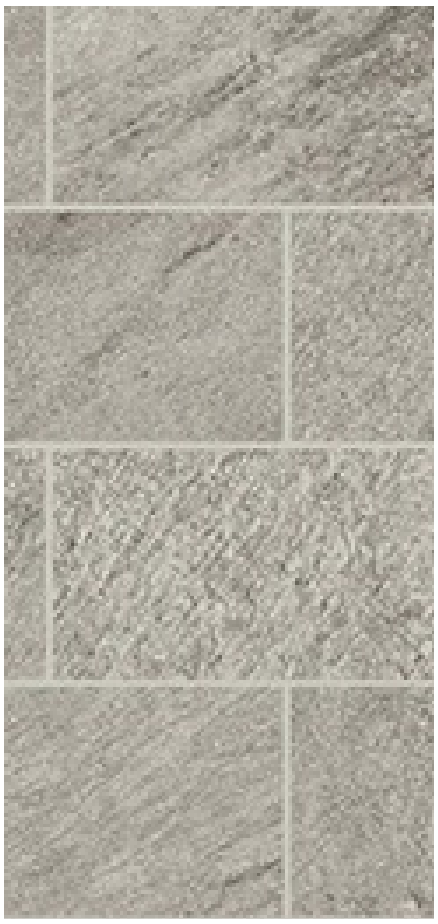

T-3 - Accent Wall Tile - Bathrooms
Atlas Concorde
Element, Gray, Brick Mosaic

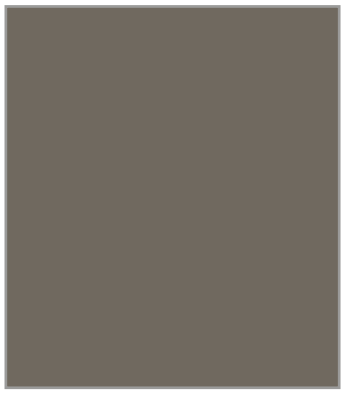

RB-1 - Rubber Base - Primary Base
Tarkett
Toast, 289

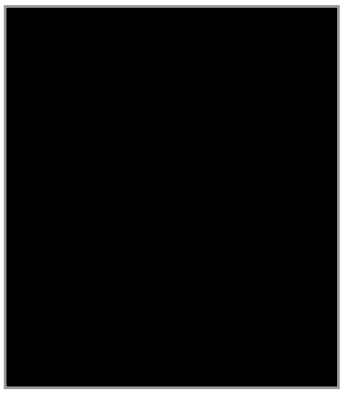

RB-2 - Rubber Base - FRP
Marlite
Black

T-4 - Floor Tile (Quarry) - Kitchen
Daltile
Quarry, Arid Flash, 8”x8”

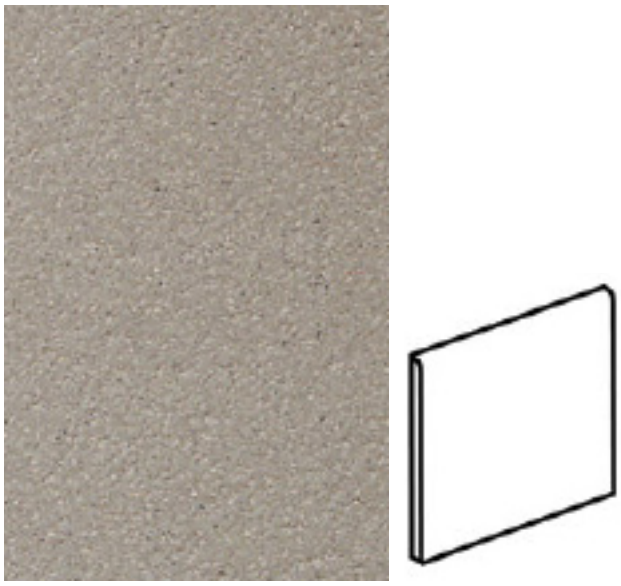

TB-1 - Tile Base (Quarry) - Kitchen
Daltile
Quarry, Arid Flash, 6”x6” Bullnose

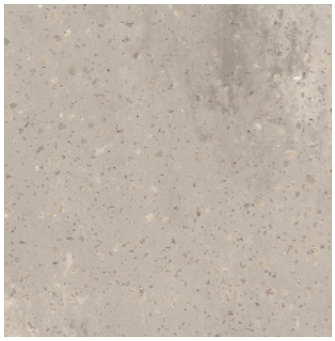

SS-1 - Solid Surface - Countertops
Corian
Neutral Aggregate

SS-2 - Solid Surface - Window Sills
Corian
Neutral Aggregate

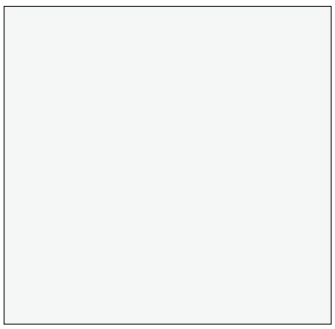

SS-3 - Solid Surface - Shower Surrounds
Corian
Glacier