United States Department of Agriculture
Forest Service

STATE OF VERMONT
RUTLAND COUNTY
R-09 EASTERN REGION
GREEN MOUNTAIN NATIONAL FOREST
MIDDLEBURY RANGER DISTRICT

LEFFERTS POND ACCESSIBILITY IMPROVEMENTS

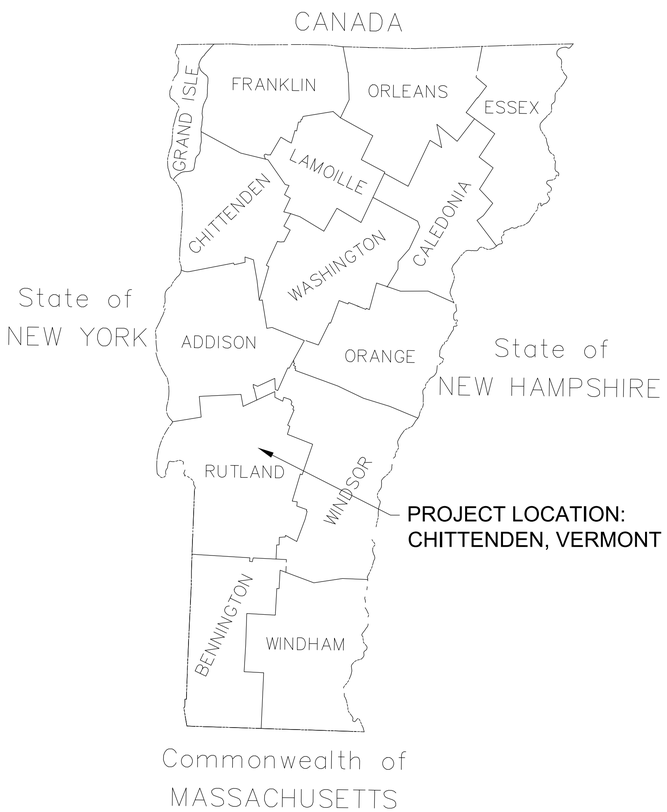

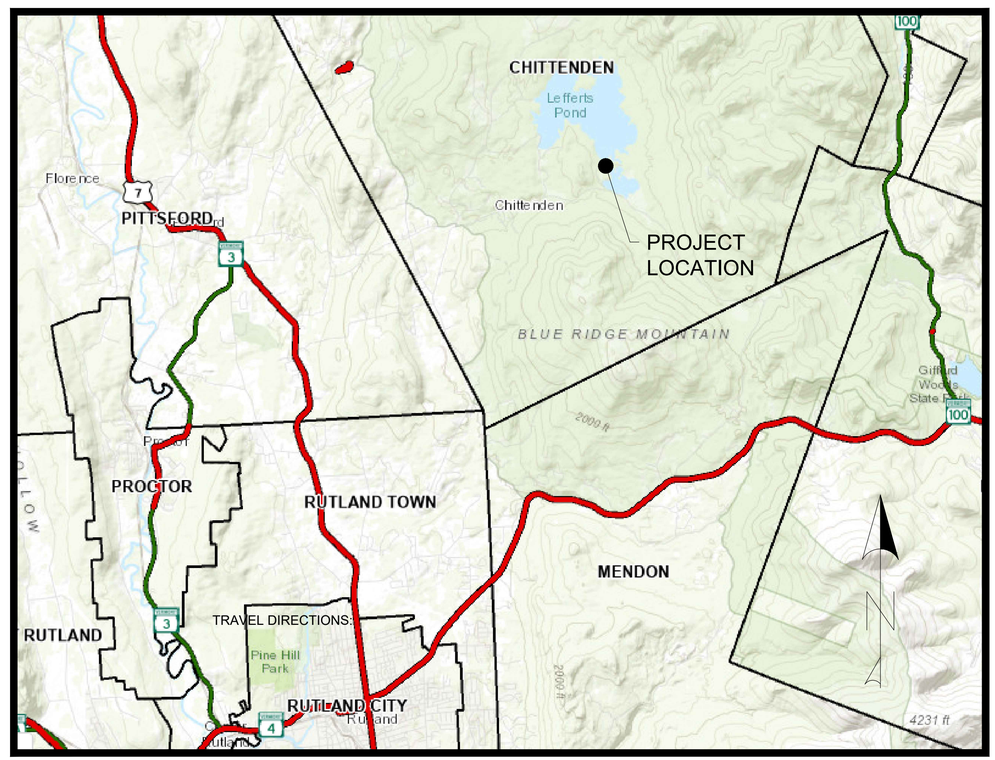

FROM THE JUNCTION OF VERMONT ROUTE 4 AND 7 IN RUTLAND, VT TRAVEL NORTH ON ROUTE 7 FOR 1.9 MILES. TURN RIGHT ONTO EAST PITTSFORD ROAD FOR 3.1 MILES. CONTINUE ON CHITTENDEN ROAD FOR 2.9 MILES. CONTINUE ON DAM ROAD FOR 1.3 MILES. TURN RIGHT ONTO WILDCAT ROAD FOR 0.9 MILES. TURN LEFT ONTO FOREST ROAD 412. PARKING FOR DAY USE AREA IS LOCATED AT END OF FOREST ROAD 412. 43.719764, -72.906025

INDEX OF SHEETS

SHEET	SHEET TITLE	DATE
1	COVERSHEET	4/21/2026
2	NOTES	4/21/2026
3	DETAILS	4/21/2026
4	ACCESSIBLE DOCK & TRAIL PLAN VIEW	4/21/2026
5	ACCESSIBLE DOCK & TRAIL PROFILE & SECTIONS VIEW	4/21/2026

RECOMMENDED BY:

BRIAN AUSTIN — Digitally signed by BRIAN AUSTIN Date: 2026.04.21 13:19:29 -04'00'
FOREST ENGINEER — DATE

CHRISTOPHER MATTRICK — Digitally signed by CHRISTOPHER MATTRICK Date: 2026.04.22 09:54:29 -04'00'
DISTRICT RANGER — DATE

APPROVED:

Digitally signed by JOHN SINCLAIR Date: 2026.04.24 09:56:17 -04'00'
FOREST SUPERVISOR — DATE

4/21/26 12:00 DAVIDPDONAHUE C:\USERS\DAVIDPDONAHUE\BOX\770\TRAVELMGMT\7720\DEVELOPMENT\7720_ROADS\7720_PROJECTS\FR412_LEFFERTS\DRAFT INFO\DWG\BOAT LAUNCH2.DWG;

SCOPE OF WORK:

1. THE PROJECT WORK SHALL GENERALLY INCLUDE, BUT IS NOT LIMITED TO: CONSTRUCTION OF AGGREGATE SURFACE TRAIL AND PRECAST CONCRETE HEADWALL, FURNISHING, DELIVERING AND INSTALLING AN ACCESSIBLE FLOATING DOCK/GANGWAY, AND REMOVING AN EXISTING PRECAST CONCRETE MAT.

GENERAL NOTES:

1. ALL MATERIALS AND CONSTRUCTION SHALL CONFORM TO THE US DEPARTMENT OF TRANSPORTATION FEDERAL HIGHWAY ADMINISTRATION STANDARD SPECIFICATIONS FOR CONSTRUCTION OF ROADS AND BRIDGES ON FEDERAL HIGHWAY PROJECTS, FP-24 (U.S. CUSTOMARY UNITS) AND THE FOREST SERVICE SUPPLEMENTAL SPECIFICATIONS.

2. DIMENSIONS, ANGLES, BEARINGS, AND ELEVATIONS OF THE EXISTING TRAIL SHOWN ON THESE PLANS HAVE BEEN OBTAINED FROM LIMITED FIELD INVESTIGATION. THE CONTRACTOR SHALL BE RESPONSIBLE FOR MAKING FIELD MEASUREMENTS OF ALL EXISTING FEATURES TO ASSURE CONSISTENCY WITH THE PROPOSED CONSTRUCTION. ANY DISCREPANCIES IN DIMENSIONS, CHARACTER OR EXTENT OF THE EXISTING FEATURES SHALL BE BROUGHT TO THE ATTENTION OF THE CONTRACTING OFFICER'S REPRESENTATIVE (COR) BEFORE ADVANCING THE WORK.

3. ALL DIMENSIONS ARE HORIZONTAL OR VERTICAL, AND ARE GIVEN AT 68 DEGREES FAHRENHEIT, UNLESS OTHERWISE NOTED.

4. THE CONTRACTOR SHALL REVIEW AND UNDERSTAND ALL APPLICABLE ENVIRONMENTAL PERMITS AND SHALL ENSURE THAT ALL CONSTRUCTION CONDITIONS ARE MET.

5. THE CONTRACTOR SHALL PROVIDE A SPILL PREVENTION PLAN AND SHALL PROVIDE A SPILL KIT ON SITE AT ALL TIMES DURING CONSTRUCTION. THIS SHALL BE PAID FOR INCIDENTAL TO ALL OTHER CONTRACT ITEMS.

6. TOPOGRAPHIC INFORMATION WAS DEVELOPED FROM A FIELD SURVEY PERFORMED BY THE FOREST SERVICE ON OCTOBER 26, 2022 USING A TOTAL STATION INSTRUMENT. ELEVATIONS ON THESE PLANS ARE BASED ON AN ARBITRARY DATUM. HORIZONTAL POSITIONS ARE BASED ON AN ARBITRARY COORDINATE SYSTEM.

7. ALL SOIL MOVING EQUIPMENT SHALL BE THOROUGHLY CLEANED TO MAKE IT FREE OF SOIL, NON-NATIVE INVASIVE SPECIES OR OTHER DEBRIS THAT COULD CONTAIN OR HOLD SEEDS PRIOR TO BEING DELIVERED TO THE PROJECT SITE. EQUIPMENT SHALL BE CONSIDERED FREE OF NON-NATIVE OR INVASIVE SPECIES AND OTHER SUCH DEBRIS WHEN A VISUAL INSPECTION BY THE COR, COMPLETED PRIOR TO THE EQUIPMENT BEING MOVED TO THE SITE, DOES NOT DISCLOSE SUCH MATERIAL PRESENT. A CURRENT LIST OF NON-NATIVE INVASIVE SPECIES OF CONCERN TO THE FOREST SERVICE IS AVAILABLE UPON REQUEST.

CONSTRUCTION NOTES:

8. IT IS THE CONTRACTOR'S RESPONSIBILITY TO CONTACT DIG SAFE PRIOR TO ANY EXCAVATION WORK.

9. WORK SHALL BE PLANNED, COORDINATED, AND EXECUTED SO AS TO LIMIT THE IMPACT ON THE LEFFERTS POND RECREATIONAL AREA.

10. ALL WORK SHALL BE DONE IN THE DRY. THIS MAY BE ACCOMPLISHED BY COMPLETING THE WORK WHEN THE WATER LEVEL IS BELOW THE CONSTRUCTION AREA OR BY DE-WATERING. IF THE WORK IS ACCOMPLISHED BY DE-WATERING, THEN IS SHALL BE COMPLETED IN ACCORDANCE WITH THE U.S. ARMY CORPS OF ENGINEERS (USACE) GENERAL PERMIT AND OCCUR BETWEEN JULY 1-OCTOBER 1. CONTRACTOR SHALL BE RESPONSIBLE FOR DEVELOPING A DE-WATERING PLAN AND SHALL PROVIDE TO COR FOR REVIEW AND APPROVAL PRIOR TO CONSTRUCTION. THIS SHALL BE INCIDENTAL TO ALL OTHER WORK.

11. THE PROPOSED ALIGNMENT OF THE TRAIL WILL BE STAKED BY THE FOREST SERVICE. FINAL ELEVATION OF THE PRECAST CONCRETE HEADWALL SHALL BE SET BY THE FOREST SERVICE.

12. REMOVE VEGETATION AND TOPSOIL FROM AREA UNDER THE PROPOSED TRAIL. ALL GRUBBING MATERIAL TO BE DISPOSED OF OFF NFS LANDS UNLESS OTHERWISE DIRECTED BY COR. PAYMENT FOR CLEARING AND GRUBBING SHALL BE UNDER BID ITEM 20101.

13. AREAS OUTSIDE THE LIMITS OF PROPOSED WORK DISTURBED BY THE CONTRACTOR'S OPERATIONS SHALL BE RESTORED BY THE CONTRACTOR TO THEIR ORIGINAL CONDITION AT THE CONTRACTOR'S EXPENSE. CONTRACTOR SHALL USE APPROPRIATE SEED AS APPROVED BY COR.

14. ALL WASTE MATERIAL, EXCEPT AS NOTED, INCLUDING UNUSED EXCAVATED MATERIAL, SHALL BECOME THE PROPERTY OF THE CONTRACTOR AND SHALL BE DISPOSED OF OFF U.S. GOVERNMENT (NATIONAL FOREST) LAND AT AN APPROVED LOCATION. THERE ARE NO GOVERNMENT DISPOSAL SITES OR PITS.

15. THE COLOR OF STONE USED FOR RIP RAP AND TRAIL SURFACE AGGREGATE SHALL BE EITHER EARTH TONES OR MEDIUM TO DARK GRAY. ALL AGGREGATE SHALL BE APPROVED BY THE COR PRIOR TO PLACEMENT. WHITE AGGREGATE IS NOT ACCEPTABLE.

TEMPORARY STAGING AREAS:

16. THE PRIMARY STAGING AREA SHALL BE THE LEFFERTS POND SITE PARKING AREA. ANY SECONDARY STAGING AREAS NEEDED SHALL BE APPROVED BY COR AND SHALL BE USED ONLY FOR THE TEMPORARY STORAGE OF MATERIALS. VEGETATION UNDER STOCKPILES SHALL BE PROTECT BY GEOTEXTILE FABRIC OR OTHER APPROVED METHOD.

17. STAGING AREAS SHALL BE FREE OF ANY REMAINING CONSTRUCTION MATERIALS AFTER THEIR USE. VEGETATION MUST BE RE-ESTABLISHED WHERE SOIL HAS BEEN DISTURBED OR WHERE THE EXISTING VEGETATION WAS DAMAGED. DECOMPACTION OF SOIL MAY BE NECESSARY. SEED WITH APPROPRIATE SEED PER PRIOR NOTES.

EROSION CONTROL NOTES:

18. PRIOR TO STARTING CONSTRUCTION THE CONTRACTOR SHALL SUBMIT AN EROSION AND SEDIMENT CONTROL PLAN WITH A SCHEDULE OF CONSTRUCTION ACTIVITIES. THE PLAN SHALL BE SITE SPECIFIC AND SHALL BE PAID FOR UNDER ITEM 15713, "SOIL EROSION & POLLUTION CONTROL".

19. THE CONTRACTOR SHALL PHYSICALLY MARK OFF LIMITS OF NECESSARY ONSITE LAND DISTURBANCE WITH TAPE OR OTHER METHODS AND REVIEW WITH WORKERS AND SUBCONTRACTORS SO THAT ALL INDIVIDUALS CAN SEE THE AREAS TO BE PROTECTED.

20. THE CONTRACTOR SHALL MINIMIZE THE AMOUNT OF DISTURBED SOIL EXPOSED TO EROSION FROM WIND AND WATER BY USING VEGETATIVE AND STRUCTURAL CONTROLS AND PROPER TIMING AND SEQUENCING OF ACTIVITIES.

21. THE CONTRACTOR SHALL DIVERT OFFSITE STORMWATER RUNOFF FROM HIGHLY ERODIBLE AREAS AND STEEP SLOPES AND CONVEY OFFSITE STORMWATER RUNOFF TO STABLE AREAS. INSTALL SILT FENCE PRIOR TO CLEARING AND GRUBBING AND INSTALL NECESSARY EROSION AND SEDIMENT CONTROL PRACTICES AS WORK TAKES PLACE. SILT FENCE SHALL BE INSTALLED ACROSS THE SLOPE, PARALLEL TO CONTOURS, AND TURNED UP AT ENDS.

22. THE CONTRACTOR SHALL DESIGNATE THE RESPONSIBILITIES FOR IMPLEMENTING THE EROSION AND SEDIMENT CONTROL PLAN TO ONE INDIVIDUAL. THE CONTRACTOR SHALL ENSURE THAT ALL WORKERS UNDERSTAND THE MAJOR PROVISIONS OF THE EROSION AND SEDIMENT CONTROL PLAN.

23. ALL ITEMS SPECIFIED IN THE EROSION CONTROL PLAN BUT NOT INCLUDED AS A SEPARATE PAY ITEM SHALL BE PAID FOR UNDER ITEM 15713, "SOIL EROSION & POLLUTION CONTROL".

24. THE CONTRACTOR SHALL APPLY TEMPORARY AND/OR PERMANENT SOIL STABILIZATION MEASURES IMMEDIATELY ON ALL DISTURBED AREAS WHERE WORK IS DELAYED OR COMPLETED.

25. ALL EARTH STOCKPILES SHALL BE PROTECTED BY SILT FENCE AT THE PERIMETER AND COVERED WITH A BLANKET OF STRAW MULCH.

26. TEMPORARY EROSION CHECKS SHALL BE INSTALLED AS NECESSARY AND SHALL REMAIN IN PLACE UNTIL PERMANENT EROSION CONTROL MEASURES HAVE BEEN INSTALLED AND APPROVED BY THE COR. EROSION CHECKS SHALL BE PERIODICALLY INSPECTED TO INSURE THAT THEY ARE IN GOOD CONDITION AND THAT AN EXCESSIVE BUILDUP OF SILT AND DEBRIS HAS NOT OCCURRED. NOT WITHSTANDING PERIODIC INSPECTIONS, EROSION CHECKS SHALL BE INSPECTED BEFORE AND AFTER RAINFALL EVENTS TO INSURE THEY ARE IN GOOD CONDITION BEFORE RAINFALL AND TO REMOVE EXCESSIVE BUILDUP OF SILT AND DEBRIS AFTER THE STORM EVENT.

27. AFTER THE PERMANENT EROSION CONTROL MEASURES ARE INSTALLED AND APPROVED BY THE COR, TEMPORARY EROSION CONTROL MEASURES SHALL BE REMOVED AND DISPOSED OF BY THE CONTRACTOR OFF GOVERNMENT LAND. COST FOR DISPOSAL SHALL NOT BE PAID FOR SEPARATELY, BUT SHALL BE CONSIDERED INCIDENTAL TO INSTALLATION.

28. DURING CONSTRUCTION OF THE FISHING PIER, CONTRACTOR SHALL PROTECT THE STRUCTURE AGAINST SURFACE WATER RUNOFF AT ALL TIMES THROUGH THE USE OF BERMS, DIVERSION DITCHES, SILT FENCE, TEMPORARY DRAINS AND/OR ANY OTHER NECESSARY MEASURES TO PREVENT SOIL STAINING OF THE WALL FACE, SCOUR OF THE RETAINING WALL FOUNDATION OR EROSION OF THE WALL BACKFILL OR INFILL.

4/21/26 11:56 DAVIDPDONAHUE C:\USERS\DAVIDPDONAHUE\BOX\7700TRAVELMGMT\7720DEVELOPMENT\7720_ROADS\7720_PROJECTS\FR412_LEFFERTS\DRAFT INFO\DWG\BOAT LAUNCH2.DWG;

United States Department of Agriculture
Forest Service

R-09
EASTERN REGION

STAMPS, LOGOS, AND SEALS

NO.	REVISION / ISSUE	DATE
4		
3		
2		
1		

PROJECT NAME

LEFFERTS POND ACCESSIBILITY IMPROVEMENTS

GREEN MOUNTAIN NATIONAL FOREST

MIDDLEBURY RANGER DISTRICT

DRAWING TITLE

NOTES

DATE 4/21/2026	ARCHIVE NO.
DESIGNER D. DONAHUE	DRAWING SHEET NO. C-01
DRAWN D. DONAHUE	
CHECKED B. AUSTIN	
PROJECT NO.	SHEET 02 OF 05

GENERAL PRECAST CONCRETE NOTES:

1. THE CONTRACTOR SHALL SUBMIT SHOP DRAWINGS FOR THE PRECAST COMPONENTS FOR REVIEW AND ACCEPTANCE PRIOR TO FABRICATION. SHOP DRAWINGS SHALL SHOW DIMESNSIONS, JOINT DETAILS, REINFORCEMENT SIZE AND LOCATION.
2. THE CONTRACTOR SHALL FURNISH ALL LABOR, MATERIALS AND EQUIPMENT REQUIRED TO PERFORM ALL OPERATIONS IN CONNECTION WITH FABRICATING, DELIVERING, AND INSTALLATING PRECAST CONCRETE ELEMENTS IN ACCORDANCE WITH THE SPECIFIED INFORMATION SHOWN ON THE PLANS AND FP-24. ALL PRECAST CONCRETE COSTS SHALL BE PAID UNDER PAY ITEM TO 57801, " PRECAST STRUCTURAL CONCRETE, CLASS A".
3. CONCRETE SHALL MEET OR EXCEED 4500 PSI COMPRESSIVE STRENGTH BASED ON STANDARD 28-DAY CYLINDER TESTS.
4. REINFORCING STEEL SHALL CONFORM TO ASTM A615, GRADE 60. ALL REINFORCING BAR DIMENSIONS ON THE DETAILED DRAWINGS ARE TO CENTERS OF BARS EXCEPT WHERE THE CLEAR DIMENSION IS SHOWN TO FACE OF CONCRETE OR OTHER SURFACE. ALL REINFORCING STEEL COSTS SHALL BE PAID UNDER PAY ITEM 55401, "REINFORCING STEEL".
5. REINFORCEMENT OF ALL PRECAST ELEMENTS SHALL HAVE A 3" MINIMUM CLEAR COVER ON ALL FACES.
6. PROVIDE 1" CHAMFERS ON ALL EXPOSED EDGES OF CONCRETE UNLESS OTHERWISE NOTED.
7. SILANE WATERPROOFING SHALL BE APPLIED TO ALL EXPOSED CONCRETE SURFACES IN ACCORDANCE WITH MANUFACTURERS RECOMMENDATIONS. SILANE PRODUCTS SHALL BE APPROVED BY THE C.O.R. ALL COSTS ASSOCIATED WITH SILANE SHALL BE INCIDENTAL TO THE PRECAST PAY ITEM 57801.

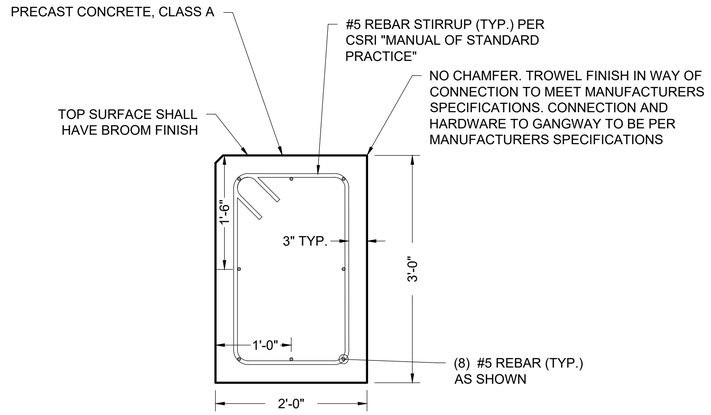

CONCRETE HEAD WALL SECTION

NOT TO SCALE

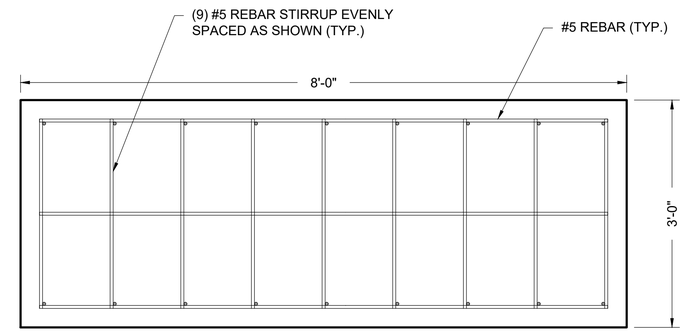

NOTES: PROVIDE A MINIMUM OF 2 LIFTING POINTS. LIFTING POINTS SHALL NOT BE ON THE TOP SURFACE.

CONCRETE HEAD WALL ELEVATION

NOT TO SCALE

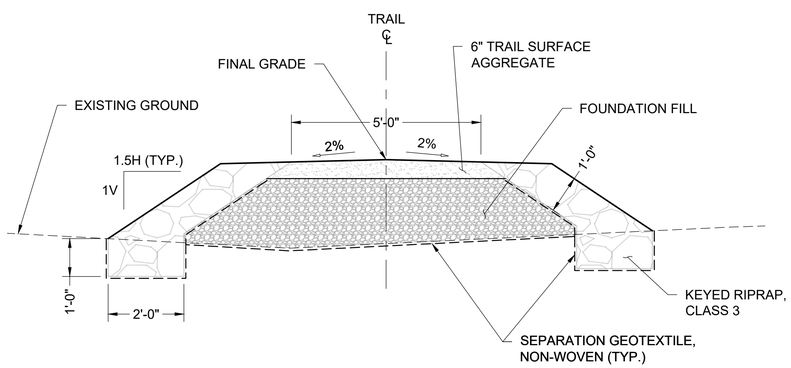

ACCESSIBLE DOCK TRAIL TYPICAL SECTION STATIONS 0+9.74 TO 20.50

NOT TO SCALE

TRAIL CONSTRUCTION NOTES:

1. OPERATE VIBRATORY COMPACTOR OVER SUBGRADE UNTIL NO VISUAL DISPLACEMENT IS DETECTED (MINIMUM OF THREE PASSES).
2. PLACE AND GRADE TRAIL SURFACE AGGREGATE (TSA) WITH 2% CROWN.
3. TSA SHALL BE AT OPTIMAL MOISTURE CONTENT FOR COMPACTION. TSA SHALL BE CONSIDERED OF OPTIMAL MOISTURE CONTENT WHEN IT FEELS DAMP IN THE HAND BUT DOES NOT DRIP WHEN SQUEEZED.
4. COMPACT TSA MATERIAL WITH VIBRATORY COMPACTOR UNTIL NO DEFORMATION IS VISUALLY DETECTED (MINIMUM OF THREE PASSES).
5. THE FINAL SURFACE SHALL BE HARD UNDER FOOT, AND FREE OF BUMPS, RIDGES, OR CONCAVITIES.
6. TRAIL SURFACE AGGREGATE SHALL BE PAID UNDER ITEM 39901.

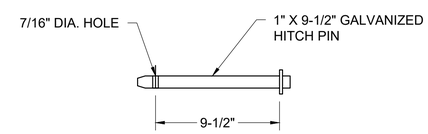

LOCKING PIN DETAIL

NOT TO SCALE

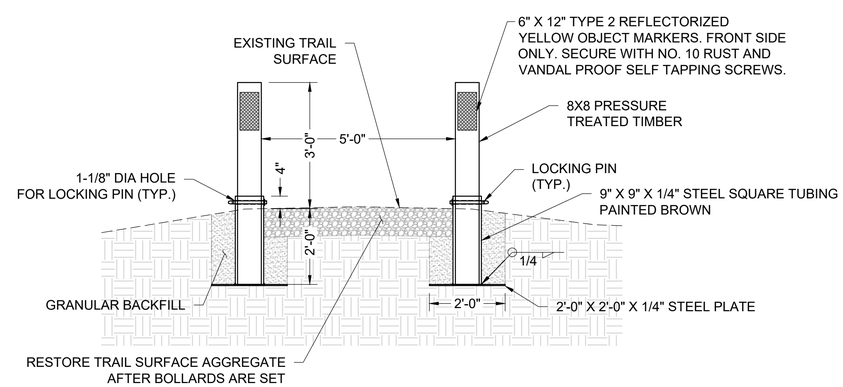

TRAIL BOLLARD DETAIL

NOT TO SCALE

USDA FOREST SERVICE U S DEPARTMENT OF AGRICULTURE

United States Department of Agriculture
Forest Service

R-09
EASTERN REGION

STAMPS, LOGOS, AND SEALS

NO.	REVISION / ISSUE	DATE
4		
3		
2		
1		

PROJECT NAME

LEFFERTS POND ACCESSIBILITY IMPROVEMENTS

GREEN MOUNTAIN NATIONAL FOREST

MIDDLEBURY RANGER DISTRICT

DRAWING TITLE

DETAILS

DATE 4/21/2026	ARCHIVE NO.
DESIGNER D. DONAHUE	DRAWING SHEET NO. C-02
DRAWN D. DONAHUE	
CHECKED B. AUSTIN	
PROJECT NO.	SHEET 03 OF 05

4/21/26 12:00 DAVIDPDONAHUE C:\USERS\DAVIDPDONAHUE\BOX\7760TRAVELMGMT\7720DEVELOPMENT\7720_ROADS\7720_PROJECTS\FR412_LEFFERTS\DRAFT INFO\DWG\BOAT LAUNCH2.DWG;

FLOATING DOCK SPECIFICATIONS

1. DOCK/PLATFORM OVERALL DIMENSIONS SHALL BE A MINIMUM OF 15' X 15' .
2. DOCK LAYOUT AND CONFIGURATION SHALL BE ACCESSIBLE PER ADA GUIDELINES.
3. FLOATING DOCKING SHALL BE DESIGN FOR PEDESTRIAN LOADING AND MAINTAIN SUFFICIENT FREEBOARD WHEN FULLY LOADED.
4. DOCK SHALL HAVE AN ANCHORING SYSTEM TO SECURE THE DOCK IN THE SAME LOCATION AND BE SUITABLE FOR THIS BODY OF WATER. ANCHORING SYSTEM SHALL CONSIST OF GALVANIZED CHAINS AND BALLAST THAT CAN BE DISCONNECTED FROM THE DOCK EACH YEAR.
5. DOCK SHALL HAVE A NON-WOOD, NON-SKID / SLIP RESISTANT SURFACE.
6. DOCK SHALL BE COMPRISED OF SMALLER SECTIONS THAT ARE REMOVABLE FROM EACH OTHER. EACH DOCK SECTIONS SHALL WEIGH 1500 LBS OR LESS.
7. DOCK SHALL HAVE A SAFETY CURB AROUND THE ENTIRE OUTSIDE PERMITER OF THE DOCK (2" MINIMUM HEIGHT).
8. DOCK SHALL HAVE AN ACCESSIBLE KAYAK LAUNCH. KAYAK LAUNCH MAY BE ON THE SIDE OR IN THE MIDDLE OF THE PLATFORM.
9. KAYAK LAUNCH SHALL HAVE AN ACCESSIBLE TRANSFER PLATFORM/STEPS WITH A SLIDEOUT SEAT TO ASSIST WITH LOADING/UNLOADING. TRANSFORM PLATFORM HEIGHT SHALL BE BETWEEN 11 AND 18 INCHES.
10. KAYAK LAUNCH SHALL HAVE ROLLERS OR GLIDES TO ASSIST WITH LAUNCHING.
11. KAYAK LAUNCH SHALL HAVE OVERHEAD BAR, HANDLES, RAILS AND A GRAB BAR FOR ASSISTING WITH LOADING, UNLOADING, AND LAUNCHING.
12. DOCK SHALL COME WITH A 5' WIDE X 30' GANGWAY.
13. GANGWAY SHALL HAVE A NON-WOOD, NON-SKID / SLIP RESISTANT SURFACE.
14. GANGWAY SHALL HAVE RAILINGS ON BOTH SIDES.
15. GANGWAY SHALL BY CONNECTED TO A CONCRETE HEADWALL BY A PIN, ROLLER, OR HINGE CONNECTION.
16. GANGWAY SHALL LAND ON THE DOCK OR ITS OWN FLOATING SECTION THAT IS CONNECTED TO THE DOCK.
17. THE DOCK, ACCESSIBLE KAYAK CHUTE, GANGWAY, AND ANCHORING SYSTEMS SHALL ALL BE COMPATIBLE WITH EACH OTHER. THIS INCLUDES ALL INCIDENTAL MATERIALS AND HARDWARE TO COMPLETELY INSTALL AND OPERATE.
18. THE INSTALLATION SHALL BE IN ACCORDANCE WITH THE MANUFACTURERS SPECIFICATIONS.
19. THE INTENT IS TO SEASONALLY INSTALL THE DOCK IN THE SPRING AND REMOVE IT IN THE FALL.
20. CONTRACTOR SHALL FURNISH TO THE GOVERNMENT ALL SPECIALIZED TOOLS OR EQUIPMENT REQUIRED TO ASSEMBLE AND DISASSEMBLE THE DOCK.
21. ALL COSTS ASSOCIATED WITH THE WORK IDENTIFIED TO FURNISH, DELIVER, UNLOADED, AND INSTALL THE GANGWAY, FLOATING DOCK/PLATFORM, AND KAYAK LAUNCH SHALL BE PAID FOR UNDER PAY ITEM 64605. THIS INCLUDES ALL MISCELLANEOUS PARTS AND MATERIALS. PAYMENT SHALL BE FOR FULLY A FUNCTIONAL AND COMPLETE DOCK SYSTEM AS IDENTIFIED IN THESE PLANS.

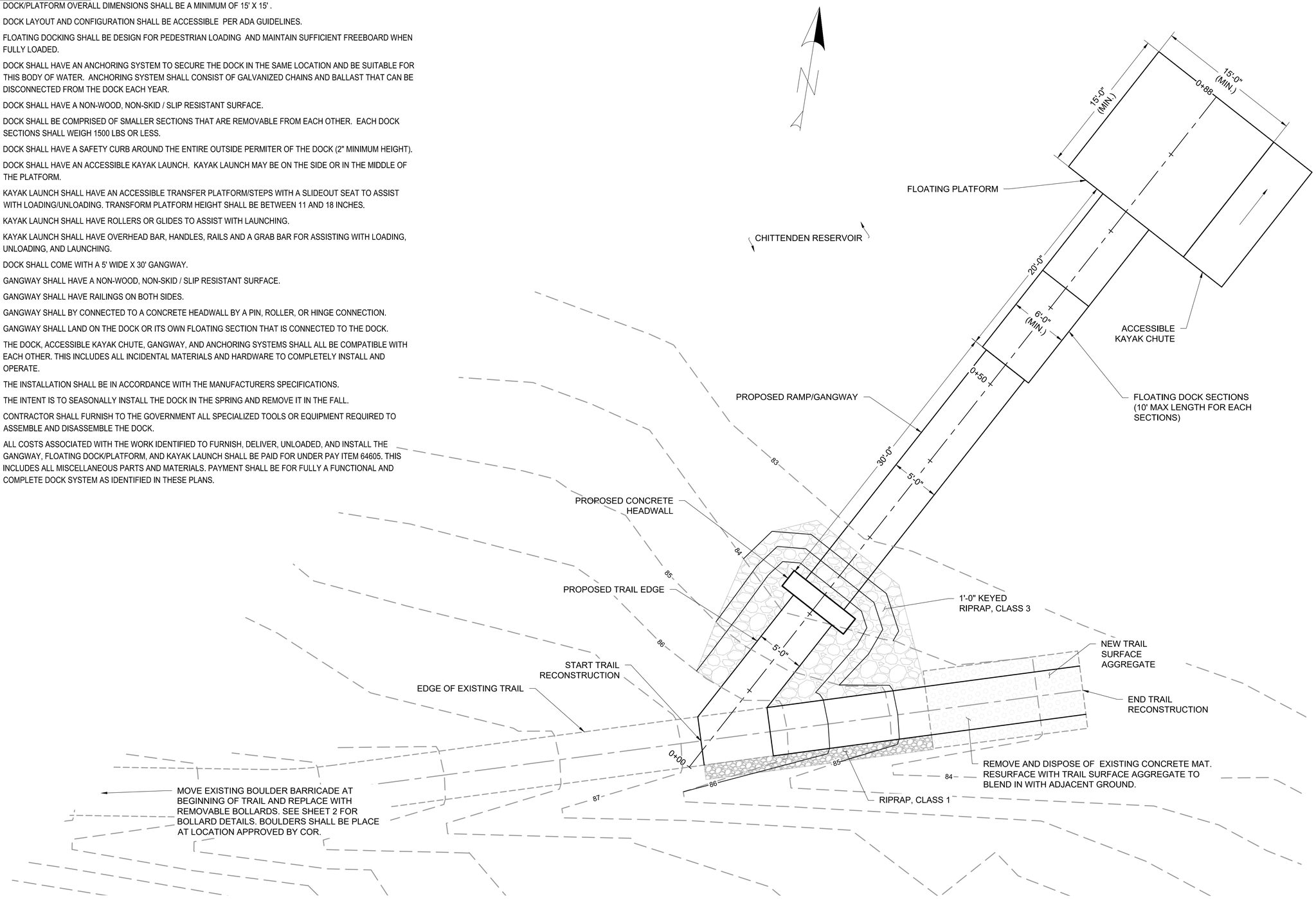

ACCESSIBLE DOCK PLAN

0 10 20 Feet

USDA FOREST SERVICE

United States Department of Agriculture
Forest Service

R-09
EASTERN REGION

STAMPS, LOGOS, AND SEALS

NO.	REVISION / ISSUE	DATE
4		
3		
2		
1		

PROJECT NAME

LEFFERTS POND ACCESSIBILITY IMPROVEMENTS

GREEN MOUNTAIN NATIONAL FOREST

MIDDLEBURY RANGER DISTRICT

DRAWING TITLE

ACCESSIBLE DOCK & TRAIL PLAN VIEW

DATE 4/21/2026	ARCHIVE NO.
DESIGNER D. DONAHUE	DRAWING SHEET NO. C-03
DRAWN D. DONAHUE	
CHECKED B. AUSTIN	
PROJECT NO.	SHEET 04 OF 05

4/21/26 11:56 DAVIDPDONAHUE C:\USERS\DAVIDPDONAHUE\BOX\7700TRAVELMGMT\7720DEVELOPMENT\7720_ROADS\7720_PROJECTS\FR412_LEFFERTS\DRAFT INFO\DWG\BOAT LAUNCH2.DWG;

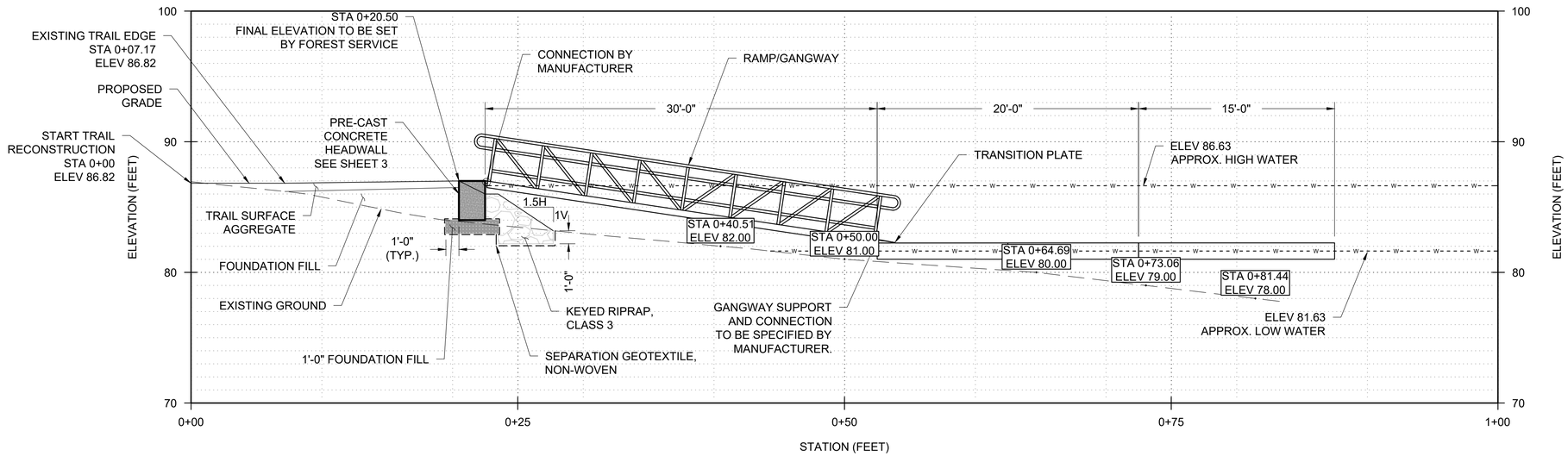

ACCESSIBLE DOCK TRAIL PROFILE

0 10 20 Feet

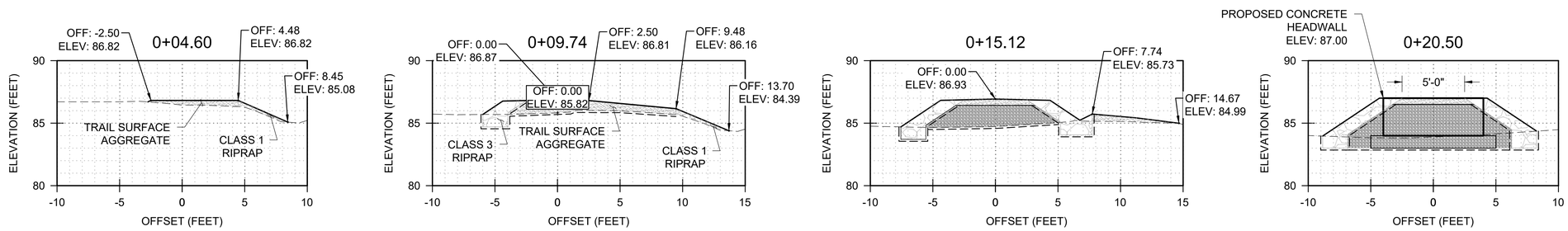

ACCESSIBLE DOCK TRAIL SECTIONS

0 10 20 Feet

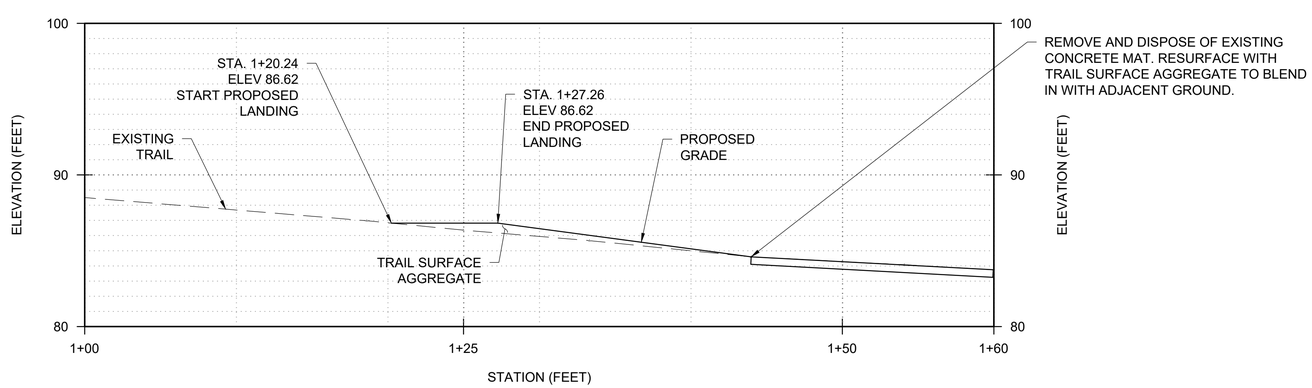

BOAT LAUNCH ACCESS TRAIL PROFILE

0 10 20 Feet

United States Department of Agriculture
Forest Service

R-09
EASTERN REGION

STAMPS, LOGOS, AND SEALS

NO.	REVISION / ISSUE	DATE
4		
3		
2		
1		

PROJECT NAME

LEFFERTS POND ACCESSIBILITY IMPROVEMENTS

GREEN MOUNTAIN NATIONAL FOREST

MIDDLEBURY RANGER DISTRICT

DRAWING TITLE

ACCESSIBLE DOCK & TRAIL PROFILE & SECTION VIEW

DATE 4/21/2026	ARCHIVE NO.
DESIGNER D. DONAHUE	DRAWING SHEET NO. C-04
DRAWN D. DONAHUE	
CHECKED B. AUSTIN	
PROJECT NO.	SHEET 05 OF 05

4/21/26 11:56 DAVIDPDONAHUE C:\USERS\DAVIDPDONAHUE\BOX\7700TRAVELMGMT\7720DEVELOPMENT\7720_ROADS\7720_PROJECTS\FR412_LEFFERTS\DRAFT INFO\DWG\BOAT LAUNCH2.DWG;