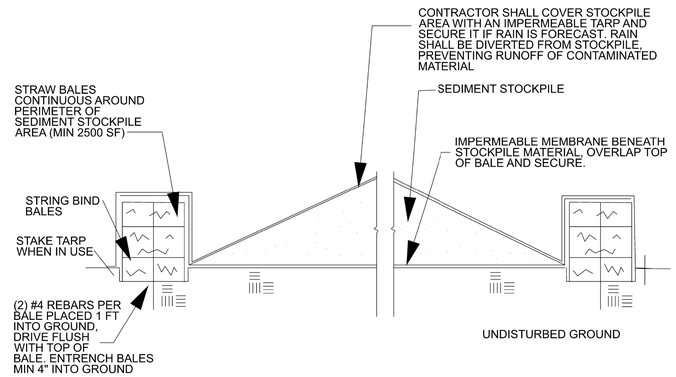

NOTES:
1. ALL ROCKS, STUMPS AND OBJECTIONABLE MATERIAL SHALL BE REMOVED FROM THE STOCKPILE AREA BEFORE THE IMPERMEABLE MEMBRANE IS INSTALLED.
2. STOCKPILE SHALL BE COVERED WITH A TARP AND SECURED IF RAIN IS FORECAST.
3. CONTRACTOR SHALL SAMPLE TEST STOCKPILE MATERIAL AT A CERTIFIED LABORATORY. TESTING SHALL BE FOR PARAMETERS REQUIRED TO TRANSPORT AND DISPOSE OF MATERIAL AT A CERTIFIED LANDFILL.
4. CONTRACTOR SHALL INSPECT AND MAINTAIN STOCKPILE AREA DAILY AND AFTER EACH RAIN EVENT TO ENSURE RUNOFF OF CONTAMINATED MATERIAL DOES NOT LEAVE STOCKPILE AREA.
5. UPON REMOVAL OF STOCKPILE MATERIAL, CONTRACTOR SHALL RESTORE AREA TO ORIGINAL CONDITION.
6. CONTRACTOR SHALL PROVIDE DETAILED DRAWING AND OPERATIONS PLAN FOR STOCKPILE AREA FOR REVIEW BEFORE CONSTRUCTING AREA. OPERATING PLAN SHALL ADDRESS METHOD FOR MONITORING WEATHER FORECAST, COVERING AND MAINTAINING STOCKPILE AREA.

SEDIMENT STOCKPILE AREA

NO SCALE

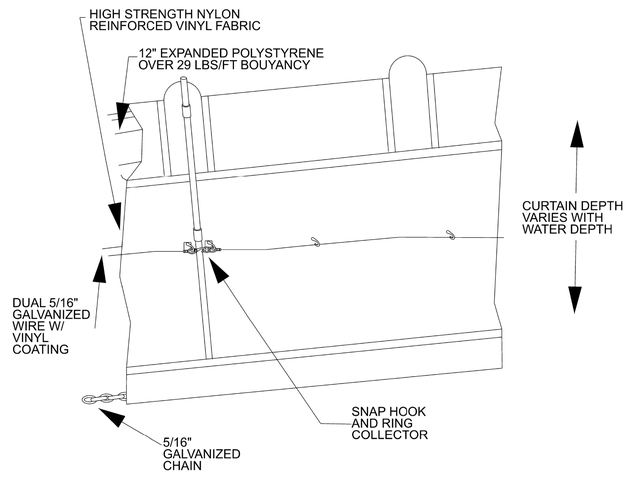

NOTES:
1. CURTAIN SHALL BE SIZED TO EXTEND TO THE RIVER BOTTOM.
2. CONTRACTOR SHALL SELECT APPROPRIATE CURTAIN TYPE WITH SPECIFATIONS BASED ON CURRENT AND DEPTH.
3. CONTRACTOR TO SELECT APPROPRIATE ANCHOR SPACING, BARRIER LENGTH & CURRENT VELOCITY TO DETERMINE CABLE LOAD, ANCHOR LOAD AND SAG.
4. REFER TO MFGS. RECOMMENDATIONS.

SILT CURTAIN

NO SCALE

US ARMY CORPS OF ENGINEERS NEW YORK DISTRICT

| | | |