WILSON & COMPANY
HIGHER RELATIONSHIPS
4401 Masthead Street NE, Suite 150
Albuquerque, NM 87109
505 348 4000 (phone)
505 348 4055 (fax)
wilsonco.com

May 28, 2024

Keith Keetso, P.E., Principal
Rock Gap Engineering
6759 Academy Rd NE
Albuquerque, NM 87109

Re: Crownpoint Health Care Facility - Medical Gas Upgrade Code Review Report

Mr. Keetso,

Per the request of Rock Gap Engineering (RGE), Wilson & Company, Inc., Engineers & Architects (Wilson & Company) has reviewed the Crownpoint Health Care Facility Medical Gas Upgrade Construction Documents (Indian Health Service Order No. HHSI16103024) dated August 10th, 2018, and conducted a field investigation at Crownpoint Health Care Facility located at Highway Junction 57, Route 9 in Crownpoint, New Mexico 87313 on May 21st, 2024, to verify existing conditions of the medical gas system.

Wilson & Company has contacted the medical equipment manufacturer, Ohio Medical, to verify if the equipment Specifications in the Crownpoint Health Care Facility Medical Gas Upgrade Construction Documents are current. Below you will find our recommendations and supplementary information:

Medical Gas Upgrade Construction Drawings:

1. **Sheet G-1:**
    a. No necessary revisions noted.

2. **Sheet MG-1:**
    a. Medical Gas General Notes
        i. Remove NFPA 50 (2001) – Standard for Bulk Oxygen Systems at Consumer Sites reference.
            1. Standard NFPA 50 has been withdrawn and incorporated into NFPA 55.
        ii. Update NFPA 55 (2016) reference to NFPA 55 (**2023**) - Compressed Gasses and Cryogenic Fluids Code
        iii. Update NFPA 101 (2018) reference to NFPA 101 (**2021**) - Life Safety Code.
        iv. Update Uniform Pluming Code (2015) reference to Uniform Pluming Code (**2021**).
        v. Update Uniform Mechanical Code (2015) reference to Uniform Mechanical Code (**2021**).
        vi. Remove International Building Code (2015) reference and replace with **International Existing Building Code (2021)**.
        vii. Update NFPA 70 (2017) reference to NFPA 70 (**2020**) - National Electrical Code
        viii. Add Facility Guidelines Institute (2022) reference to General Note 1.
    b. Medical Air Compressor (MAC-1) Schedule
        i. MAC-1 model number A500-T2-H120 has not changed.
        ii. Recommend addition of **medical source valve** to MAC-1 Schedule.
        iii. BACnet controls are available and may be added to the equipment specification.

WILSON & COMPANY

iv. Update Ohio Medical Contact information to **Clark Niermeyer** (Clark.Niermeyer@OhioMedical.com), **(262) 490-5221**.
v. Reference Attachment 3 for equipment cut sheets.

c. Medical Vacuum Pump (MVP-1) Schedule
i. MVP-1 model number has been updated to **S750-S2-V120**.
ii. Recommend adding **bacterial filter** to MVP-1 Schedule.
iii. Manufacturer does not recommend a variable frequency drive (VFD) for updated MVP-1 selection.
iv. Manufacturer does not recommend a purge line for updated MVP-1 selection.
v. BACnet controls are available and may be added to the equipment specification.
vi. Update Ohio Medical Contact information to **Clark Niermeyer** (Clark.Niermeyer@OhioMedical.com), **(262) 490-5221**.
vii. Reference Attachment 3 for equipment cut sheets.

d. Medical Gas Equipment Schedule
i. It may be beneficial to the project to update the equipment specifications for MGVB-1, MGVB-2, MGVB-3, MGVB-4, AMMGAP-1, and MGO-1 to Ohio Medical, such that all new equipment is furnished by one (1) manufacturer.
ii. Reference Attachment 3 for equipment cut sheets.

3. Sheet MG-2:

a. During site visit on May 21st, 2024, Nathaniel Morris (IHS) advised that the medical gas outlets (MGO-1) in Rooms MP117, MP118, MP151, MP152, and MP153 should be removed and capped in the ceiling space, not replaced because these spaces are no longer used as patient room. As directed by Mr. Morris, the scope of work identified in the Construction Documents for Rooms MP117, MP118, MP151, MP152, and MP153 should be revised accordingly in these spaces.

b. The Nursery Room area has been updated to Women's Health Clinic.

4. Sheet MG-3:

a. No necessary revisions noted.

5. Sheet MG-4:

a. An emergency low pressure gaseous oxygen inlet box has been added on the exterior wall of Area "C" since the Construction Documents were issued on August 10th, 2024, and it is recommended that the addition of this equipment be indicated on this plan.
i. Reference Attachment 2.

b. During site visit on May 21st, 2024, Nathaniel Morris (IHS) advised that the following items need to be added to this area:
i. A chain link access gate should be added to the west of the emergency low pressure gaseous oxygen inlet box,
ii. Additional exterior lighting be added above the emergency low pressure gaseous oxygen inlet box, and
iii. A concrete walkway for access from the chain link access gate to the emergency low pressure gaseous oxygen inlet box.

6. **Sheet MG-5:**
    a. No necessary revisions noted.

7. **Sheet E-1**
    a. In review of the updated mechanical equipment data, site evaluation, and Medical Gas Upgrade Construction Drawings dated August 10th, 2018, there are no impactful electrical code changes that will result in substantial modification to the electrical design. However, there are discrepancies noted in the information on the Medical Gas Upgrade Construction Drawings and original Record Drawings included on this sheet. This would include wire size verification/replacement and circuit breaker replacement by the Contractor.
    b. The Medical Gas Upgrade Construction Drawings are calling out motor circuit protectors (MCPs) which are typically used when connected directly to motors as part of a motor starter or variable frequency drives (VFDs). Under this scope of work the Contractor will be connecting to UL rated panels, so thermal magnetic breakers are recommended in lieu of MCPs. MCPs are the similar, but only contain overload elements, whereas thermal magnetic breaks have both overloads and short circuit protection.
    c. Medical air compressor (MAC-1):
        i. Two (2) 7.5 HP motors are indicated on E-1 and match the field verified equipment.
        ii. The updated medical air compressor contains two (2) 5 HP motors.
        iii. The Record Drawings show conflicting wire size between the schedule and plan view; a #10 minimum conductor is required. This will require field verification and possible replacement if wire size is smaller than #10.
        iv. The Record Drawings indicate a motor circuit protector is installed currently. The new equipment needs to be protected by thermal magnetic breaker. A new 25A, 3P circuit breaker will need installed in MCCEA-A1. Eaton FDC3025 or equal. Compatibility must be field verified prior to ordering.
        v. During the site visit it was noted that the motor circuit protector (MCP) for MVP-1 was locked out/tagged out and this unit was not operating.
            1. Reference Attachment 2.
    d. Medical vacuum pump (MVP-1):
        i. Two (2) 10 HP motors were noted on the field verified equipment nameplate and (2) 5 HP motors indicated on Sheet E-1.
        ii. The updated vacuum pump (MVP-1) skid contains two (2) 7.5 HP motors.
        iii. As-built drawings show conflicting wire size between the schedule and plan view. #10 minimum conductor is required. This will require field verification and possible replacement if wire size is smaller than #10.
        iv. As-built drawings indicate a motor circuit protector is installed currently. The new equipment needs to be protected by thermal magnetic breaker. 30A, 3P circuit breaker needs installed in MCCEA-A2. Eaton FDC3030 or equal. Compatibility must be field verified prior to ordering.

<u>Medical Gas Upgrade Project Specifications:</u>

1. **Section 220500.1.21.A**
    a. Update 2015 UPC Code reference to **2021** UPC.

2. **Section 220500.1.25.P.1**
    a. Update 2015 UPC Code reference to **2021** UPC.

3. **Section 220548.1.5.A.4**
    a. Update International Building Code (IBC) 2015 Edition to reference to **International Existing Building Code (IEBC) 2021 Edition**.

4. **Section 220548.1.6**
    a. Update IBC 2015 to reference to **IEBC 2021 Edition**.

5. **Section 262816.1.2.A.3.a**
    a. Update International Building Code to reference to **International Existing Building Code (IEBC)**.

6. **Section 262816.1.2.A.3.c**
    a. Update International Building Code to reference to **International Existing Building Code (IEBC)**.

In conclusion, the current Code revisions identified in this report do not affect the constructability of the Crownpoint Health Care Facility Medical Gas Upgrade Construction Documents. The recommendations above may be implemented through an addendum during the bid phase of this project where the Code references and recommendations can be incorporated into the Construction Documents. In our opinion, there is not necessary to update or reissue the Crownpoint Health Care Facility Medical Gas Upgrade Construction Documents dated August 10th, 2018.

Please let us know if there are any questions, comments, or concerns regarding the information in this report for the Crownpoint Health Care Facility Medical Gas Upgrade Code Review.

Respectfully,

Paul Swiderski, P.E., LEED AP
Mechanical Engineer

Wilson & Company, Inc., Engineers & Architects
4401 Masthead Street NE, Suite 150 | Albuquerque, NM 87109
Paul.Swiderski@WilsonCo.com
505-348-4029 (direct)

Attachments:

1. Medical Gas Upgrade Construction Drawings with Comments
2. Site Photographs from Crownpoint Health Care Facility site visit on May 21st, 2024
3. Updated Medical Gas Equipment Cut Sheets

ATTACHMENT #1

CROWNPOINT HEALTH CARE FACILITY
MEDICAL GAS UPGRADE
FOR
INDIAN HEALTH SERVICE

PROJECT LOCATION

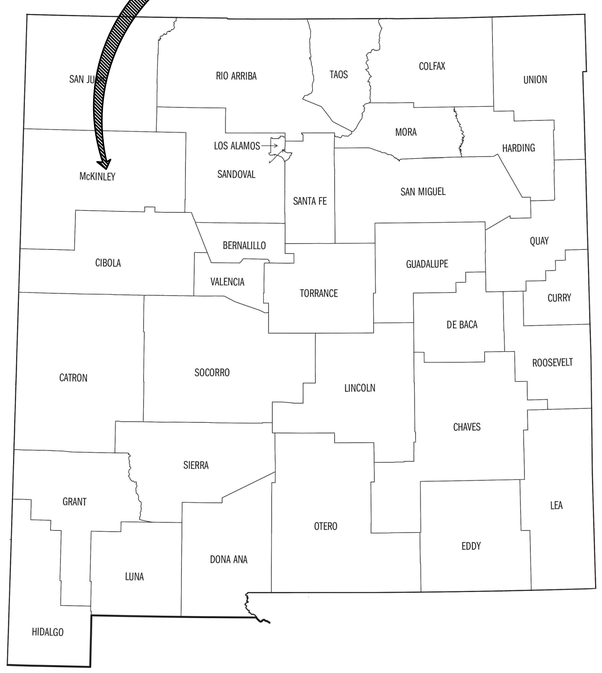

PROJECT LOCATION MAP

SCALE: NOT TO SCALE

NORTH

PROJECT AREA

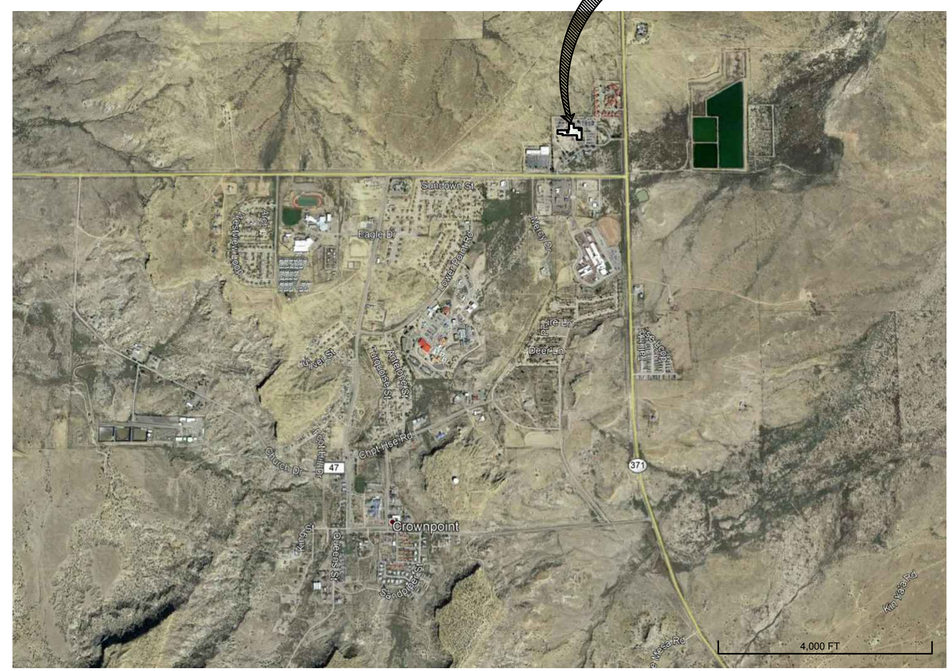

VICINITY MAP

SCALE: NOT TO SCALE

NORTH

SHEET INDEX

SEQ	SHEET	TITLE
01	G-1	GENERAL COVER SHEET
02	MG-1	MEDICAL EQUIPMENT SCHEDULES AND GENERAL NOTES
03	MG-2	WATER & MEDICAL GAS PIPING PLAN - AREA "A" & NURSERY ROOM
04	MG-3	DOMESTIC WATER & MEDICAL GAS PIPING PLAN - AREA "B"
05	MG-4	DOMESTIC WATER & MEDICAL GAS PIPING PLAN - AREA "C"
06	MG-5	ENLARGED MECHANICAL ROOM PIPING PLAN & BULK OXYGEN STORAGE PLAN
07	E-1	PARTIAL ELECTRICAL POWER PLAN AND MOTOR CONTROL CENTER SCHEDULE

NO COMMENT

REV	DATE	DESCRIPTION	BY
0	08/10/18	MEDICAL GAS UPGRADE - DESIGN	

APPROVED: ARCHITECTURAL | MECHANICAL | ELECTRICAL | PLUMBING

INDIAN HEALTH SERVICE - SHS - 1955

DEPARTMENT OF HEALTH AND HUMAN SERVICES
INDIAN HEALTH SERVICE
OFFICE OF ENVIRONMENTAL HEALTH AND ENGINEERING
ALBUQUERQUE AREA OFFICE
5300 Homestead Road NE Albuquerque, New Mexico 87110

CROWNPOINT HEALTH CARE FACILITY
HWY JUNCTION 57, ROUTE 9 CROWNPOINT, NM 87313
MEDICAL GAS UPGRADE - DESIGN
GENERAL COVER SHEET

DWN BY: VICUNA
CKD BY: SWIDERSKI
SCALE: N.T.S.
DATE: 08/10/2018

G-1

PROJECT NUMBER: HHSI161201200003I
SHEET 01 OF 07

ATTACHMENT #1

MEDICAL GAS EQUIPMENT SCHEDULE

MARK	DESCRIPTION	MFR	MODEL	NOTES
MGVB-1	MEDICAL GAS VALVE BOX	AMICO	ZIL-M124	AMICO ALERT SERIES 4" RECESSED MULTIPLE ZONE VALVE BOX (FOR OXYGEN, MEDICAL AIR AND MEDICAL VACUUM) WITH 18 GAUGE STEEL VALVE BOX, BALL VALVES WITH TUBE EXTENSIONS, CLEAR WINDOW AND GAUGES. SYSTEM TO COMPLY WITH NFPA. SIZES TO BE VERIFIED BY CONTRACTOR PRIOR TO ORDERING.
MGVB-2	MEDICAL GAS VALVE BOX	AMICO	ZIL-M114	AMICO ALERT SERIES 4" RECESSED MULTIPLE ZONE VALVE BOX (FOR OXYGEN, MEDICAL AIR AND MEDICAL VACUUM) WITH 18 GAUGE STEEL VALVE BOX, BALL VALVES WITH TUBE EXTENSIONS, CLEAR WINDOW AND GAUGES. SYSTEM TO COMPLY WITH NFPA. SIZES TO BE VERIFIED BY CONTRACTOR PRIOR TO ORDERING.
MGVB-3	MEDICAL GAS VALVE BOX	AMICO	ZIL-2335	AMICO ALERT SERIES 4" RECESSED MULTIPLE ZONE VALVE BOX (FOR OXYGEN, MEDICAL AIR, SPARE, AND MEDICAL VACUUM) WITH 18 GAUGE STEEL VALVE BOX, BALL VALVES WITH TUBE EXTENSIONS, CLEAR WINDOW AND GAUGES. SYSTEM TO COMPLY WITH NFPA. SIZES TO BE VERIFIED BY CONTRACTOR PRIOR TO ORDERING.
MGVB-4	MEDICAL GAS VALVE BOX	AMICO	ZIL-223	AMICO ALERT SERIES 4" RECESSED MULTIPLE ZONE VALVE BOX (FOR OXYGEN, MEDICAL AIR, AND MEDICAL VACUUM) WITH 18 GAUGE STEEL VALVE BOX, BALL VALVES WITH TUBE EXTENSIONS, CLEAR WINDOW AND GAUGES. SYSTEM TO COMPLY WITH NFPA. SIZES TO BE VERIFIED BY CONTRACTOR PRIOR TO ORDERING.
AMMGAP-1	AREA / MASTER MEDICAL GAS ALARM PANEL	AMICO	A2ADR-OAVMMM	AMICO ALERT-2 SERIES RECESSED MASTER ALARM (FOR OXYGEN, MEDICAL AIR AND MEDICAL VACUUM) WITH AUDIBLE AND VISUAL ALARM. ALERT-2 ALARM IS 115 VAC TO 220 VAC. 50 TO 60 HZ. SYSTEM TO COMPLY WITH NFPA.
MGO-1	MEDICAL GAS OUTLET	AMICO	1. O-QDWAL-U-OXY 2. O-QDWAL-U-AIR 3. O-QDWAL-U-VAC	OXYGEN, MEDICAL AIR AND VACUUM WALL OUTLETS SHALL BE AN AMICO ALERT-1 SERIES WITH QUICK DISCONNECT AND SHALL BE OHMEDA DIAMOND COMPATIBLE. A LARGE COLOR CODED FRONT PLATE SHALL BE USED FOR EASE OF GAS IDENTIFICATION. POSITIVE PRESSURE OUTLETS SHALL BE EQUIPPED WITH A PRIMARY AND SECONDARY CHECK VALVE. OUTLET BODIES SHALL BE GAS SPECIFIC BY INDEXING EACH GAS SERVICE TO A GAS SPECIFIC DUAL PIN INDEXING ARRANGEMENT ON THE RESPECTIVE IDENTIFICATION MODULE IN ENGLISH.

REFERENCE REPORT AND ATTACHMENT #3

REVISIONS PER REPORT

MEDICAL AIR COMPRESSOR SCHEDULE

MARK	DESCRIPTION	MFR	MODEL	SPECIFICATIONS
MAC-1	MEDICAL AIR COMPRESSOR	OHIO MEDICAL	A500-T2-H120-DD 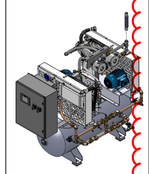 AIR COMPRESSOR 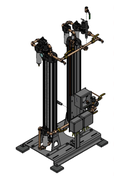 AIR TREATMENT MODULE	5 HP DUPLEX MEDICAL TANK MOUNTED OIL-LESS RECIPROCATING CONTINUOUS ON DEMAND COMPRESSED AIR SYSTEM WITH DESICCANT DRYERS CAPACITY RATING OF 18.5 SCFM AT 50 PSIG AT 7,000 FEET WITH 2ND 18.5 SCFM COMPRESSOR RESERVE. CAPACITY AT SEA LEVEL 23 SCFM AT 50 PSIG (ONE UNIT) WITH 2ND 23 SCFM COMPRESSOR IN RESERVE 5 HP EACH 10 HP TOTAL, 460/3/60 VOLTAGE, 120 GALLON AIR RECEIVER TANK, AMBIENT HEAT LOAD ONE COMPRESSOR OPERATING AT 11,500 BTUH. OHIO MEDICAL, LLC MODEL NUMBER A500-T2-H120-DD 5 HP DUPLEX MEDICAL TANK MOUNTED OIL-LESS RECIPROCATING AIR COMPRESSOR SYSTEM, NFPA 99 COMPLIANT FOR MEDICAL APPLICATIONS SHALL CONSIST OF ODP ELECTRIC MOTOR DRIVEN OIL-LESS AIR COMPRESSORS, AN UNDERWRITERS LABORATORIES LISTED ELECTRICAL CONTROL MODULE MOUNTED IN A NEMA 12 ENCLOSURE, ASME AIR RECEIVER, AIR COOLED AFTERCOOLERS WITH INDIVIDUAL DRAINS, INLINE INTAKE AIR FILTERS AND AN AIR TREATMENT MODULE. THE COMPONENTS SHALL BE MODULARLY ASSEMBLED TO ACCOMMODATE MOST EXISTING DOORWAYS. THE SYSTEM SHALL INCLUDE INTERCONNECTING COPPER/BRASS PIPING AND WIRING TO PROVIDE A FUNCTIONAL OPERATING PACKAGE WITH APPLICABLE ELECTRICAL AND PLUMBING CONNECTIONS AT THE INSTALLATION SITE. THE SYSTEM SHALL CONSIST OF TWO ASSEMBLED, PRE-PIPED, PRE-WIRED SKIDS FACTORY TESTED PRIOR TO SHIPMENT AND WARRANTED FOR A PERIOD OF (30) MONTHS FROM DATE OF SHIPMENT OR (24) MONTHS FROM DATE OF START-UP. COMPRESSOR MODULES: THE COMPRESSORS SHALL CONSIST OF A CRANKCASE, CONNECTING RODS, INTEGRAL COUNTERWEIGHTS FOR SMOOTH OPERATION, AND CYLINDERS AND HEADS DESIGNED FOR EFFICIENT HEAT DISSIPATION. PISTON RINGS SHALL BE PROVIDED TO REDUCE WEAR AND HAVE A LIFE SPAN OF 10,000 HOURS. EACH COMPRESSOR CYLINDER IS PROTECTED BY A TEMPERATURE SWITCH, WHICH WILL STOP THE DRIVE MOTOR AND PROVIDE AN ALARM SIGNAL IN THE EVENT OF ABNORMAL DISCHARGE AIR TEMPERATURE. EACH BELT DRIVEN COMPRESSOR MODULE SHALL INCLUDE AN INLINE FILTER WITH A PARTICLE RETENTION OF 10 MICRONS, INLET ISOLATION VALVE DISCHARGE ISOLATION VALVE, AND ASME SAFETY PRESSURE RELIEF VALVE. EACH AIR COMPRESSOR SHALL BE RATED FOR 18.5 SCFM AND 50 PSIG AT 7,000 FEET ALTITUDE. AIR RECEIVER TANK: THE 120 GALLON CORROSION RESISTANT COATED RECEIVER IS EQUIPPED WITH AN ASME SAFETY PRESSURE RELIEF VALVE, SIGHT GLASS PRESSURE GAUGE, AUTOMATIC DRAIN, THREE-VALVE BY-PASS AND SOURCE ISOLATION VALVE. AIR TREATMENT MODULE (SEPARATE SKID): THE AIR TREATMENT MODULE SHALL INCLUDE DUAL DRYERS, DUAL FILTRATION SYSTEM, CO AND DEW POINT MONITORING DEVISE WITH LOCAL AUDIBLE AND VISUAL SIGNALS AND DRY CONTACTS FOR REMOTE MONITORING. THE COMPONENTS SHALL BE MOUNTED ON A COMMON BASE WITH INTERCONNECTING COPPER/BRASS PIPING AND UPSTREAM AND DOWNSTREAM ISOLATION VALVES. THE ISOLATION VALVES SHALL ALLOW EITHER SET OF COMPONENTS TO BE SERVICED WITHOUT SHUTTING DOWN THE SYSTEM. THE DRYER SYSTEM SHALL BE DUPLEXED AND PROVIDE A PRESSURE DEW POINT OF 10F. DRYERS SHALL BE HEATLESS DESICCANT DESIGN SELECTED AND SIZED TO PROVIDE FOR THE PEAK-CALCULATED DEMAND. THE DESICCANT DRYER SHALL BE EQUIPPED WITH A DEWPOINT DEPENDENT SWITCHING FEATURE TO MINIMIZE THE NEED FOR PURGE AIR. THE DUAL FILTRATION SYSTEM IS DESIGNED TO REMOVE LIQUIDS AND PARTICULATE MATTER, AND CONSISTS OF ONE MICRON COALESCING FILTERS WITH DIFFERENTIAL PRESSURE INDICATORS AND AUTOMATIC DRAIN, AIR LINE PRESSURE REGULATORS WITH GAUGES, FINAL PRESSURE RELIEF VALVE, AND SAMPLING VALVE. SYSTEM CONTROLS: THE UNDERWRITERS LABORATORIES LISTED ELECTRICAL MOTOR CONTROL SYSTEM SHALL BE OF A FUSE-LESS DESIGN IN A NEMA 12 ENCLOSURE. THE "CONTINUOUS ON DEMAND" FEATURE SHALL STOP THE OPERATION OF THE MOTORS DURING PERIODS OF LOW OR NO DEMAND. THE CONTROLS SHALL INCLUDE INDIVIDUAL SELF PROTECTED COMBINATION MOTOR CONTROLS WITH SHORT CIRCUIT, SINGLE PHASE AND THERMAL OVERLOAD PROTECTION, INDIVIDUAL 120 VOLT CONTROL CIRCUIT TRANSFORMERS WITH FUSE-LESS PRIMARY AND SECONDARY PROTECTION, PRESSURE SENSORS, TEMPERATURE SWITCHES WITH RESET BUTTON, AND AN ELECTRONIC CONTROLLER TO AUTOMATICALLY CHANGE THE OPERATING SEQUENCE OF THE COMPRESSORS. THE CABINET DOOR SHALL HAVE AN HMI (HUMAN MACHINE INTERFACE) SYSTEM STATUS DISPLAY TO INCLUDE SYSTEM PRESSURE, DEWPOINT, PUMP OPERATION, ACCUMULATED TIME, MAINTENANCE INTERVAL, FAULT CONDITIONS, AND SILENCE BUTTON; LIGHTED HAND-OFF-AUTOMATIC SELECTOR SWITCHES AND SAFETY DISCONNECT OPERATING HANDLES. ALL REQUIRED LOCAL ALARM FUNCTIONS SHALL BE INTEGRATED INTO THE PACKAGED SYSTEM. DRY CONTACTS SHALL BE FURNISHED FOR LAG ALARM, HIGH CO, HIGH DEW POINT, AND HIGH TEMPERATURE FAULT. LEAD PRESSURE SWITCH SHALL HAVE UPPER SETTING OF 90 PSIG AT THE SITE. ACCESSORIES: INCLUDED FOR JOB SITE INSTALLATION ARE INLET AND DISCHARGE FLEXIBLE CONNECTORS, VIBRATION MOUNTING PADS, SOURCE ISOLATION VALVE, AND TOUCH-UP PAINT. CONTACT OHIO MEDICAL AT (214)578-6381.

REFERENCE REPORT AND ATTACHMENT #3

MEDICAL VACUUM PUMP SCHEDULE

MARK	DESCRIPTION	MFR	MODEL	SPECIFICATIONS
MVP-1	MEDICAL VACUUM PUMP	OHIO MEDICAL	S750-ST2-V120 REVISED 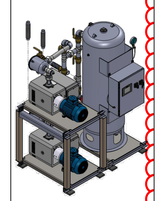 VACUUM PUMP	7.5 HP DUPLEX STACK MOUNTED MEDICAL OIL LUBRICATED / AIR COOLED ROTARY VANE VACUUM PUMP SYSTEM WITH CAPACITY RATING 46 SCFM AT 19" HGV AT 7,000 FEET WITH 2ND 46 SCFM PUMP IN RESERVE. DUPLEX STACK MOUNTED LUBRICATED ROTARY VANE MEDICAL VACUUM PUMP SYSTEM SHALL BE FULLY NFPA 99 COMPLIANT FOR USE IN MEDICAL VACUUM APPLICATIONS. THE UNIT WILL CONSIST OF 460/3/60 VOLTAGE TEFC ELECTRIC MOTOR DRIVEN PUMPS, VACUUM RECEIVER, ELECTRICAL CONTROL SYSTEM, AND INTERCONNECTION PIPING AND WIRING. THE COMPONENTS SHALL BE MODULARLY ASSEMBLED TO ACCOMMODATE MOST EXISTING DOORWAYS AND DESIGNED FOR SERVICEABILITY. THE PACKAGED UNIT SHALL BE FACTORY TESTED PRIOR TO SHIPMENT AND WARRANTED FOR A PERIOD OF (30) MONTHS FROM DATE OF SHIPMENT OR (24) MONTHS FROM DATE OF START-UP. THE TOTAL RECIRCULATING OIL SEALED ROTARY VANE VACUUM PUMP SHALL BE SINGLE STAGE AIR COOLED, AND CAPABLE OF PRODUCING A MAXIMUM VACUUM LEVEL OF 29"HGV AT SEA LEVEL. THE PUMP ASSEMBLY SHALL INCLUDE AN INTEGRAL ANTI-SUCK BACK VALVE, EXHAUST OIL SEPARATOR DELIVERING 99.9% OIL-FREE AIR, OIL LEVEL SIGHT GLASS, AND AN EXHAUST PRESSURE GAUGE. EACH PUMP IS PROTECTED BY A TEMPERATURE SWITCH, CHECK VALVE, PUMP ISOLATION VALVE, SOURCE ISOLATION VALVE AND FLEXIBLE CONNECTOR. EACH VACUUM PUMP SHALL BE RATED FOR 46 SCFM AT 19"HGV AT 7,000 FEET ALTITUDE AND 60 SCFM AT 19"HGV AT SEA LEVEL. THE 120 GALLON VERTICAL VACUUM RECEIVER SHALL BE CONSTRUCTED TO ASME STANDARDS, RATED FOR FULL VACUUM, AND INCLUDE A THREE VALVE BY-PASS, MANUAL DRAIN VALVE, VACUUM GAUGE AND THE NATIONAL BOARD LABEL. THE UNDERWRITERS LABORATORIES LISTED DUPLEX ELECTRICAL MOTOR CONTROL SYSTEM PANEL SHALL BE OF A FUSE-LESS DESIGN IN A NEMA 12 ENCLOSURE. THE "CONTINUOUS ON DEMAND" FEATURE SHALL STOP THE OPERATION OF THE MOTORS DURING PERIODS OF LOW OR NO DEMAND. THE CONTROLS INCLUDE INDIVIDUAL SELF PROTECTED COMBINATION MOTOR CONTROLS WITH SHORT CIRCUIT, SINGLE PHASE AND THERMAL OVERLOAD PROTECTION, INDIVIDUAL 120 VOLT CONTROL CIRCUIT TRANSFORMERS WITH FUSE-LESS PRIMARY AND SECONDARY PROTECTION, PRESSURE SENSORS, AND AN ELECTRONIC CONTROLLER TO AUTOMATICALLY SWITCH THE OPERATING SEQUENCE OF THE VACUUM PUMPS. THE CABINET DOOR SHALL HAVE AN HMI (HUMAN MACHINE INTERFACE) SYSTEM STATUS DISPLAY TO INCLUDE SYSTEM PRESSURE, PUMP OPERATION, ACCUMULATED TIME, MAINTENANCE INTERVAL, FAULT CONDITIONS AND SILENCE BUTTON; LIGHTED HAND-OFF-AUTOMATIC SELECTOR SWITCHES AND SAFETY DISCONNECT OPERATING HANDLES. LEAD VACUUM SWITCH SHALL HAVE UPPER SETTING OF 21"HGV AT THE SITE. ALL REQUIRED LOCAL ALARM FUNCTIONS SHALL BE INTEGRATED INTO THE PACKAGED SYSTEM. THE CIRCUITRY SHALL BE DESIGNED SO THE AUDIBLE SIGNAL CAN BE SILENCED AND THE VISUAL INDICATOR WILL REMAIN UNTIL THE FAULT HAS BEEN CLEARED AND THE RESET BUTTON ACTUATED. LOCAL ALARM FUNCTIONS SHALL BE PROVIDED. DRY CONTACTS ARE FURNISHED FOR REMOTE (MASTER) ALARM SIGNALS FOR LAG ALARM. ALSO, CONTACTS ARE SUPPLIED FOR HIGH TEMPERATURE FAULT. ACCESSORIES INCLUDED FOR JOB SITE INSTALLATION ARE INLET AND DISCHARGE FLEXIBLE CONNECTORS, SOURCE ISOLATION VALVE, VIBRATION MOUNTING PADS AND TOUCH-UP PAINT PAINT FOR FINAL INSTALLATION. PROVIDE FACTORY START-UP FOR WARRANTY. CONTACT OHIO MEDICAL AT (214)578-6381.

REFERENCE REPORT AND ATTACHMENT #3

MEDICAL GAS GENERAL NOTES

A. THE MEDICAL GAS SYSTEM AT CROWNPOINT HEALTH CARE FACILITY IS A LEVEL 1 MEDICAL SYSTEM. THIS PROJECT IS TO PROVIDE AND MAINTAIN A SAFE ENVIRONMENT FOR USING THE MEDICAL GAS SYSTEMS. THE INSTALLATION MUST COMPLY WITH NFPA 50 (2001) - STANDARD FOR BULK OXYGEN SYSTEMS AT CONSUMER SITES, NFPA 55 (2016) - COMPRESSED GASSES AND CRYOGENIC FLUIDS CODE, NFPA 99 (2018) - HEALTH CARE FACILITIES CODE, NFPA 101 (2018) - LIFE SAFETY CODE, UNIFORM PLUMING CODE (2015), UNIFORM MECHANICAL CODE (2015), INTERNATIONAL BUILDING CODE (2015) AND NFPA 70 (2017) - NATIONAL ELECTRICAL CODE.

B. PRIOR TO START OF WORK, CONTRACTOR SHALL COORDINATE WITH THE MEDICAL GAS VERIFICATION AGENCY TO REVIEW PROPOSED INSTALLATION METHODS BY THE CONTRACTOR. CONTRACTOR TO ENSURE ALL PROPOSED WORK IS APPROVED BY MEDICAL GAS VERIFIER PRIOR TO START OF WORK. PREVIOUS MEDICAL GAS PIPING TESTS AND EVALUATIONS PERFORMED BY *LIFE SAFETY MEDICAL GAS* (LSMG) 505.506.2000.

C. CONTRACTOR SHALL PERFORM THE INITIAL LEAK TEST, BLOWDOWN TEST, PRESSURE TEST, PIPING PURGE, AND CROSS CONNECTION TEST AS SPECIFIED IN NFPA 99. ISOLATE ANY EQUIPMENT NOT RATED FOR THE TEST PRESSURE.

D. THE MEDICAL GAS SYSTEM SHALL BE TESTED BY A FACTORY TRAINED SERVICE REPRESENTATIVE OF THE MEDICAL GAS EQUIPMENT MANUFACTURER AFTER INSTALLATION OF THE SYSTEM HAS BEEN COMPLETED. THE REPRESENTATIVE SHALL PERFORM THE FOLLOWING SYSTEM VERIFICATION TESTS IN ACCORDANCE WITH NFPA 99: CROSS CONNECTION TEST, FLOW TEST, PIPING PURGE TEST, PIPING, PURITY TEST, AND CONCENTRATION TEST.

E. AT THE CONCLUSION OF TESTING, THE CERTIFIER SHALL PRESENT A TEMPORARY CERTIFICATE TO THE OWNER OR THE APPROPRIATE RESPONSIBLE PARTY, ANY ABNORMALITIES SHALL BE NOTED. IN ADDITION, IF REPAIR TO ANY PIECE OF MEDICAL GAS EQUIPMENT IS NECESSARY, PERFORM THIS REPAIR IN A REASONABLE TIME PERIOD. THE WORK SHALL BE RE-INSPECTED AND CERTIFIED BY THE REPRESENTATIVE, ALSO IN A REASONABLE TIME PERIOD.

F. ALL SITE WORK SHALL BE PERFORMED DURING NORMAL DUTY HOURS WHICH ARE 8:00 AM TO 5:00 PM, MONDAY THROUGH FRIDAY. NO ON-SITE WORK SHALL BE PERMITTED OUTSIDE NORMAL DUTY HOURS OR ON FEDERAL HOLIDAYS WITHOUT WRITTEN APPROVAL FROM THE OWNER'S REPRESENTATIVE. ANY DEVIATION FROM THESE HOURS MUST BE REQUESTED BY THE CONTRACTOR 48 HOURS OR MORE BEFORE THE WORK PERIOD COMMENCES AND AUTHORIZED IN WRITING BY THE COR. THIS REQUIREMENT IS DUE TO THE NEED FOR SECURITY OF PATIENTS, GOVERNMENT PERSONNEL AND PROPERTY. THERE MUST BE A "RESPONSIBLE GOVERNMENT AGENT" ON SITE WHEN ANY CONTRACTOR IS PRESENT ON IHS PROPERTY. ALL WORKERS TO SIGN IN/OUT WITH FACILITY MANAGEMENT DEPARTMENT.

G. CONTRACTOR SHALL BE RESPONSIBLE FOR ALL WORK INDICATED IN THE CONSTRUCTION DOCUMENTS INCLUDING PATCH, PAINT AND REPAIR WORK. PORTIONS OF THIS SCOPE OF WORK WILL REQUIRE A GENERAL CONTRACTOR WITH A CURRENT NEW MEXICO GB-98 LICENSE.

H. THE CONTRACTOR SHALL PROVIDE ALL REQUIRED MATERIALS, LABOR, AND EQUIPMENT TO UPDATE THE EXISTING MEDICAL GAS SYSTEM TO MEET CURRENT NFPA 99 LATEST EDITION AND AS NOTED ON THE CONTRACT DOCUMENTS.

I. INSTALLERS OF MEDICAL GAS AND VACUUM SYSTEMS SHALL MEET THE REQUIREMENTS OF ASSE 6010. ALL WORK SHALL BE PERFORMED BY BRAZERS CERTIFIED IN ACCORDANCE WITH AWS B2.2.

J. EQUIPMENT OR PIPING REMOVED OR REPAIRED SHALL BE INSTALLED BACK IN ACCORDANCE WITH THE DRAWINGS AND SHALL BE CERTIFIED IN COMPLIANCE WITH NFPA 99.

K. PIPING MATERIALS SHALL BE CERTIFIED FOR USE IN POSITIVE PRESSURE MEDICAL GAS SYSTEMS. TUBES, VALVES, STATION OUTLETS, AND OTHER PIPING COMPONENTS SHALL HAVE BEEN CLEANED FOR OXYGEN SERVICE BY THE MANUFACTURER PRIOR TO INSTALLATION IN ACCORDANCE WITH CGA G4.1-2017.

L. FITTING, VALVES, AND OTHER COMPONENTS SHALL BE DELIVERED SEALED, LABELED AND KEPT SEALED UNTIL PREPARED FOR INSTALLATION.

M. EACH LENGTH OF TUBE SHALL BE DELIVERED PLUGGED OR CAPPED BY THE MANUFACTURER AND KEPT SEALED UNTIL PREPARED BY INSTALLER. TUBES SHALL BE HARD-DRAWN SEAMLESS COPPER ASTM-B 819, MEDICAL GAS, TYPE L, EXCEPT THAT WHERE OPERATING PRESSURE ARE ABOVE A GAUGE PRESSURE OF 1275 KPA (185 PSI) TYPE K SHALL BE USED FOR SIZES LARGER THAN DN80 (NPS 3) (3 1/8" IN O.D).

N. PIPE SUPPORT SHALL BE SUPPORTED FROM THE BUILDING STRUCTURE IN ACCORDANCE WITH MSS SP-69. HANGERS AND SUPPORTS SHALL COMPLY WITH MSS SP-58.

O. REPLACE ALL COMPONENTS ON MEDICAL GAS STATION INLETS/OUTLETS INCLUDING SPRINGS, O-RINGS, FASTENERS, SEALS AND SHUTOFF POPPETS WITH NEW EQUIPMENT.

P. PIPE LABELING FOR MEDICAL GAS SYSTEM, BOTH NEW AND EXISTING, SHALL COMPLY WITH CURRENT NFPA 99.

Q. CONTRACTOR SHALL BE RESPONSIBLE FOR REPLACEMENT OF BROKEN CEILING TILES NOT IDENTIFIED PRIOR TO REMOVAL IN AREAS WITH LAY-IN CEILINGS.

R. REMOVAL OF MEDICAL GAS PIPING (O2, MA, AND VAC) THROUGH FIRE RATED PARTITIONS WILL REQUIRE PATCH AND REPAIR OF FIRE RATED PARTITION WALL TO MATCH EXISTING CONSTRUCTION. FIRE RATED PARTITIONS ARE LOCATED ALONG CORRIDOR WALLS AND WHERE INDICATED ON PLANS. NOT ALL FIRE RATED PARTITIONS HAVE BEEN IDENTIFIED IN DEMOLITION PLANS, FIELD VERIFY.

S. CONTRACTOR SHALL BE RESPONSIBLE FOR INSTALLING ALL WIRING FROM EQUIPMENT TO MASTER AND ZONE ALARMS PER NFPA 99.

T. CONTRACTOR SHALL MAINTAIN AND PROVIDE AS BUILT REDLINES TO I.H.S. UPON COMPLETION OF WORK PRIOR TO FINAL PAYMENT.

U. MEDICAL GAS ACRONYMS:

O2 = OXYGEN
MA = MEDICAL AIR
VAC = VACUUM

REV	DATE	DESCRIPTION	BY
0	08/10/18	MEDICAL GAS UPGRADE - DESIGN	

APPROVED | ARCHITECTURAL | MECHANICAL | ELECTRICAL | PLUMBING

INDIAN HEALTH SERVICE - IHS - 1955

DEPARTMENT OF HEALTH AND HUMAN SERVICES
INDIAN HEALTH SERVICE
OFFICE OF ENVIRONMENTAL HEALTH AND ENGINEERING
ALBUQUERQUE AREA OFFICE
5300 Homestead Road NE Albuquerque, New Mexico 87110

CROWNPOINT HEALTH CARE FACILITY
HWY JUNCTION 57, ROUTE 9 CROWNPOINT, NM 87313
MEDICAL GAS UPGRADE - DESIGN
GENERAL NOTES AND MEDICAL EQUIPMENT SCHEDULES

DWN BY: VICUNA
CKD BY: SWIDERSKI
SCALE: N.T.S.
DATE: 08/10/2018

MG-1

PROJECT NUMBER: HHSI161201200003I

SHEET 02 OF 07

ATTACHMENT #1

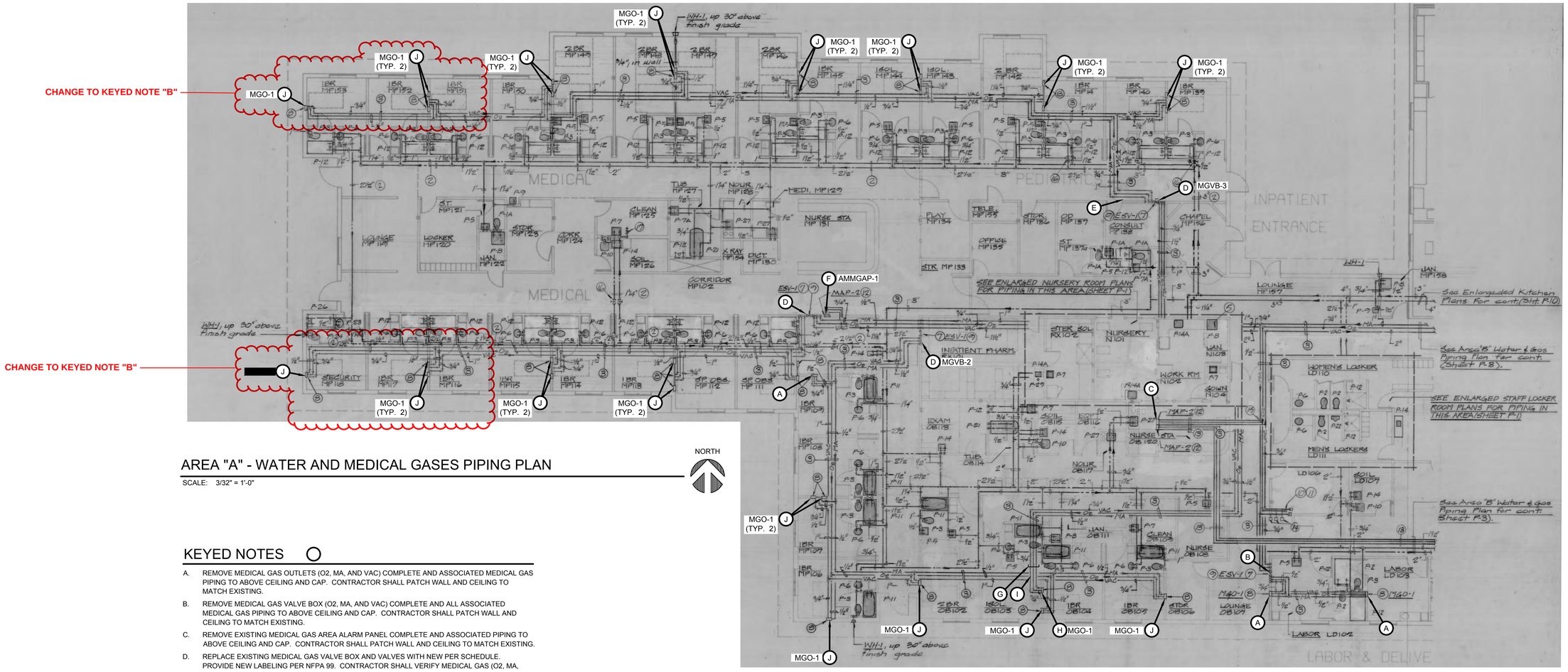

AREA "A" - WATER AND MEDICAL GASES PIPING PLAN

SCALE: 3/32" = 1'-0"

NORTH

KEYED NOTES

A. REMOVE MEDICAL GAS OUTLETS (O2, MA, AND VAC) COMPLETE AND ASSOCIATED MEDICAL GAS PIPING TO ABOVE CEILING AND CAP. CONTRACTOR SHALL PATCH WALL AND CEILING TO MATCH EXISTING.

B. REMOVE MEDICAL GAS VALVE BOX (O2, MA, AND VAC) COMPLETE AND ALL ASSOCIATED MEDICAL GAS PIPING TO ABOVE CEILING AND CAP. CONTRACTOR SHALL PATCH WALL AND CEILING TO MATCH EXISTING.

C. REMOVE EXISTING MEDICAL GAS AREA ALARM PANEL COMPLETE AND ASSOCIATED PIPING TO ABOVE CEILING AND CAP. CONTRACTOR SHALL PATCH WALL AND CEILING TO MATCH EXISTING.

D. REPLACE EXISTING MEDICAL GAS VALVE BOX AND VALVES WITH NEW PER SCHEDULE. PROVIDE NEW LABELING PER NFPA 99. CONTRACTOR SHALL VERIFY MEDICAL GAS (O2, MA, AND VAC) SIZES TO MATCH EXISTING.

E. CONTRACTOR SHALL INSTALL DIELECTRIC SPACERS BETWEEN MEDICAL GAS PIPING AND SPRINKLER PIPING ABOVE CEILING.

F. REMOVE EXISTING MEDICAL GAS AREA ALARM PANEL AND REPLACE WITH NEW COMBINATION AREA/MASTER MEDICAL GAS ALARM PANEL.

G. REMOVE AND CAP 1/2" O2, 1/2" MA AND 3/4" VAC PIPING IN WALL AND CEILING SPACE BACK TO THIS LOCATION ABOVE THE CEILING.

H. PROVIDE AND INSTALL NEW O2, MA AND VAC MEDICAL GAS OUTLETS ON WALL. PROVIDE NEW GAS PIPING FROM OUTLETS TO NEW POC LOCATED IN CEILING SPACE.

I. CONNECT NEW 1/2" O2, 1/2" MA AND 3/4" VAC PIPING TO EXISTING MEDICAL GAS LINES FROM MGVB-2 IN CEILING SPACE.

J. PROVIDE AND INSTALL NEW MEDICAL GAS (1/2" O2, 1/2" MA AND 3/4" VAC) OUTLETS ON WALL.

K. PROVIDE NEW LABELING PER NFPA 99.

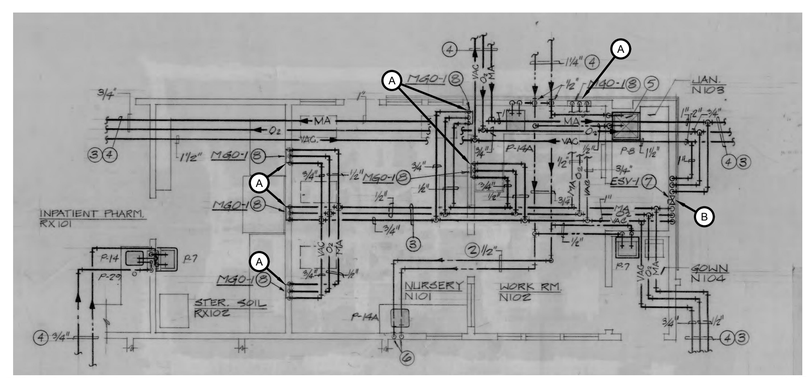

WOMEN'S HEALTH CLINIC — NURSERY ROOM WATER & MEDICAL GASES PIPING PLAN

SCALE: 3/32" = 1'-0"

NORTH

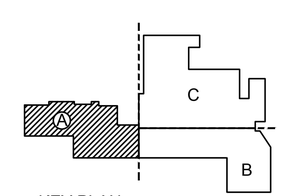

KEY PLAN
N.T.S.

REV	DATE	DESCRIPTION	BY
0	08/10/18	MEDICAL GAS UPGRADE - DESIGN	

ARCHITECTURAL | MECHANICAL | ELECTRICAL | PLUMBING

APPROVED

INDIAN HEALTH SERVICE - SHS - 1955

DEPARTMENT OF HEALTH AND HUMAN SERVICES
INDIAN HEALTH SERVICE
OFFICE OF ENVIRONMENTAL HEALTH AND ENGINEERING
ALBUQUERQUE AREA OFFICE
5300 Homestead Road NE Albuquerque, New Mexico 87110

CROWNPOINT HEALTH CARE FACILITY
HWY JUNCTION 57, ROUTE 9 CROWNPOINT, NM 87313

MEDICAL GAS UPGRADE - DESIGN

AREA "A" PIPING PLAN & NURSERY ROOM PIPING PLAN

DWN BY: VICUNA
CKD BY: SWIDERSKI
SCALE: 3/32"=1'-0"
DATE: 08/10/2018

MG-2

PROJECT NUMBER: HHSI16120120003I
SHEET 03 OF 07

ATTACHMENT #1

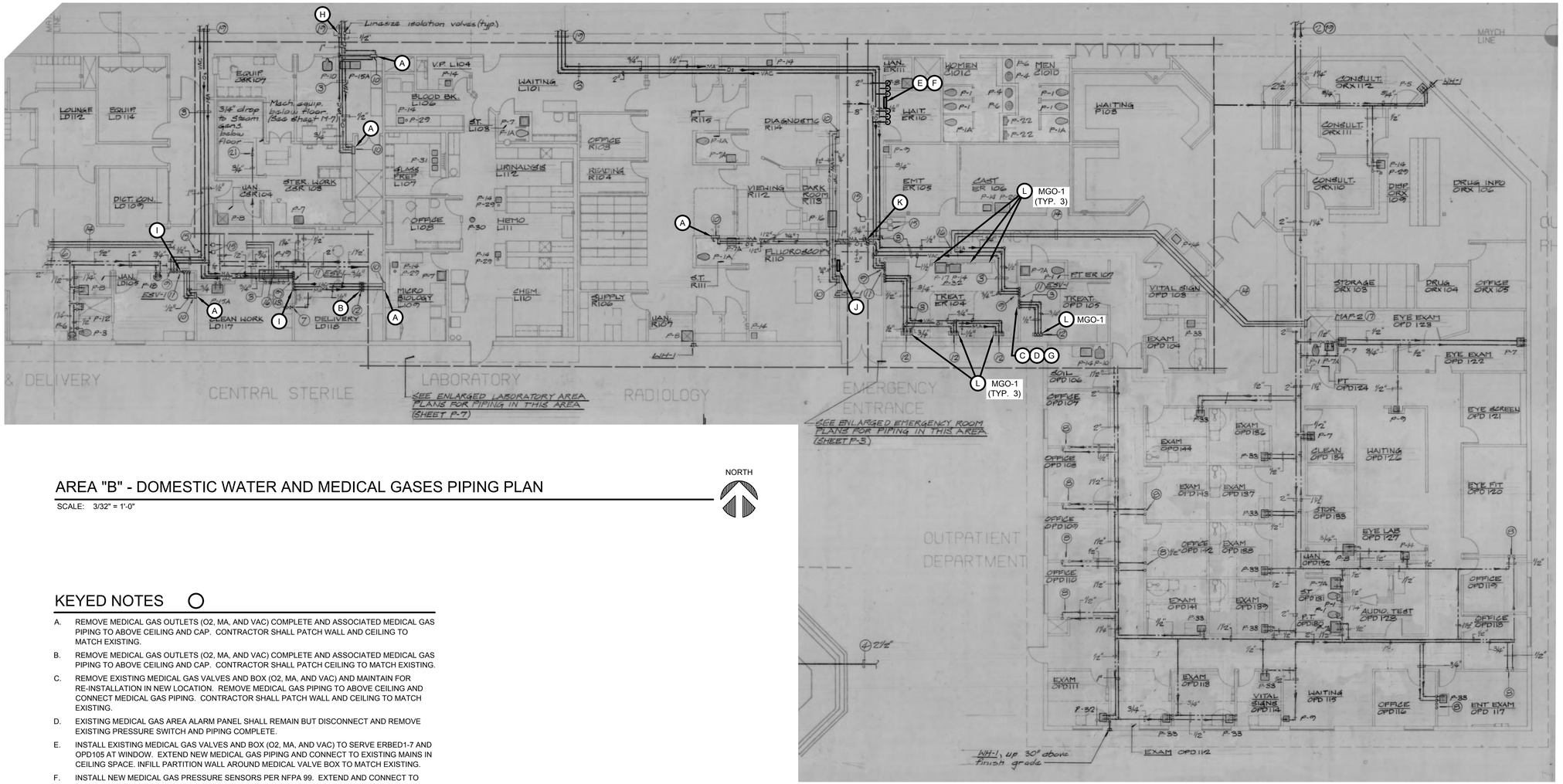

AREA "B" - DOMESTIC WATER AND MEDICAL GASES PIPING PLAN

SCALE: 3/32" = 1'-0"

NORTH

KEYED NOTES

A. REMOVE MEDICAL GAS OUTLETS (O2, MA, AND VAC) COMPLETE AND ASSOCIATED MEDICAL GAS PIPING TO ABOVE CEILING AND CAP. CONTRACTOR SHALL PATCH WALL AND CEILING TO MATCH EXISTING.

B. REMOVE MEDICAL GAS OUTLETS (O2, MA, AND VAC) COMPLETE AND ASSOCIATED MEDICAL GAS PIPING TO ABOVE CEILING AND CAP. CONTRACTOR SHALL PATCH CEILING TO MATCH EXISTING.

C. REMOVE EXISTING MEDICAL GAS VALVES AND BOX (O2, MA, AND VAC) AND MAINTAIN FOR RE-INSTALLATION IN NEW LOCATION. REMOVE MEDICAL GAS PIPING TO ABOVE CEILING AND CONNECT MEDICAL GAS PIPING. CONTRACTOR SHALL PATCH WALL AND CEILING TO MATCH EXISTING.

D. EXISTING MEDICAL GAS AREA ALARM PANEL SHALL REMAIN BUT DISCONNECT AND REMOVE EXISTING PRESSURE SWITCH AND PIPING COMPLETE.

E. INSTALL EXISTING MEDICAL GAS VALVES AND BOX (O2, MA, AND VAC) TO SERVE ERBED1-7 AND OPD105 AT WINDOW. EXTEND NEW MEDICAL GAS PIPING AND CONNECT TO EXISTING MAINS IN CEILING SPACE. INFILL PARTITION WALL AROUND MEDICAL VALVE BOX TO MATCH EXISTING.

F. INSTALL NEW MEDICAL GAS PRESSURE SENSORS PER NFPA 99. EXTEND AND CONNECT TO EXISTING MEDICAL GAS AREA ALARM PANEL LOCATED IN EMERGENCY ROOM DEPARTMENT.

G. UPDATE ALL LABELING, INSTRUCTIONS, AND BRING MEDICAL GAS AREA ALARM PANEL UP TO CURRENT NFPA 99 REQUIREMENTS.

H. REMOVE EXISTING MEDICAL GAS (O2, MA, AND VAC) BRANCH PIPING AND VALVE COMPLETE BACK TO MAIN AND CAP.

I. REMOVE MEDICAL GAS VALVE BOX (O2, MA, AND VAC) COMPLETE AND ASSOCIATED MEDICAL GAS PIPING TO ABOVE CEILING AND CAP. CONTRACTOR SHALL PATCH WALL AND CEILING TO MATCH EXISTING.

J. INSTALL NEW MEDICAL GAS ZONE VALVE BOX AND VALVES FOR RADIOLOGY. INTERCEPT EXISTING MEDICAL GASES ABOVE CEILING AND ROUTE TO NEW VALVE BOX. CONTRACTOR SHALL PATCH CEILING AND WALLS TO MATCH EXISTING.

K. REMOVE EXISTING MEDICAL GAS VALVES (O2, MA, AND VAC) ABOVE CEILING AND PATCH MEDICAL GAS PING PER NFPA 99 REQUIREMENTS.

L. PROVIDE AND INSTALL NEW MEDICAL GAS OUTLETS (1/2" O2, 1/2" MA AND 3/4" VAC) ON WALL AT EXISTING LOCATIONS.

NO COMMENT

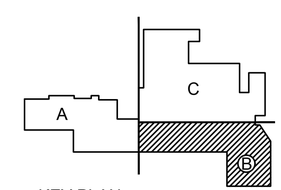

KEY PLAN
N.T.S.

REV	DATE	DESCRIPTION	BY
0	08/10/18	MEDICAL GAS UPGRADE - DESIGN	

APPROVED | ARCHITECTURAL | MECHANICAL | ELECTRICAL | PLUMBING

INDIAN HEALTH SERVICE - SHI - 1955

DEPARTMENT OF HEALTH AND HUMAN SERVICES
INDIAN HEALTH SERVICE
OFFICE OF ENVIRONMENTAL HEALTH AND ENGINEERING
ALBUQUERQUE AREA OFFICE
5300 Homestead Road NE Albuquerque, New Mexico 87110

CROWNPOINT HEALTH CARE FACILITY
HWY JUNCTION 57, ROUTE 9 CROWNPOINT, NM 87313

MEDICAL GAS UPGRADE - DESIGN

AREA "B" PIPING PLAN

DWN BY: VICUNA
CKD BY: SWIDERSKI
SCALE: 3/32"=1'-0"
DATE: 08/10/2018

MG-3

PROJECT NUMBER: HHSI16120120003I
SHEET 04 OF 07

ATTACHMENT #1

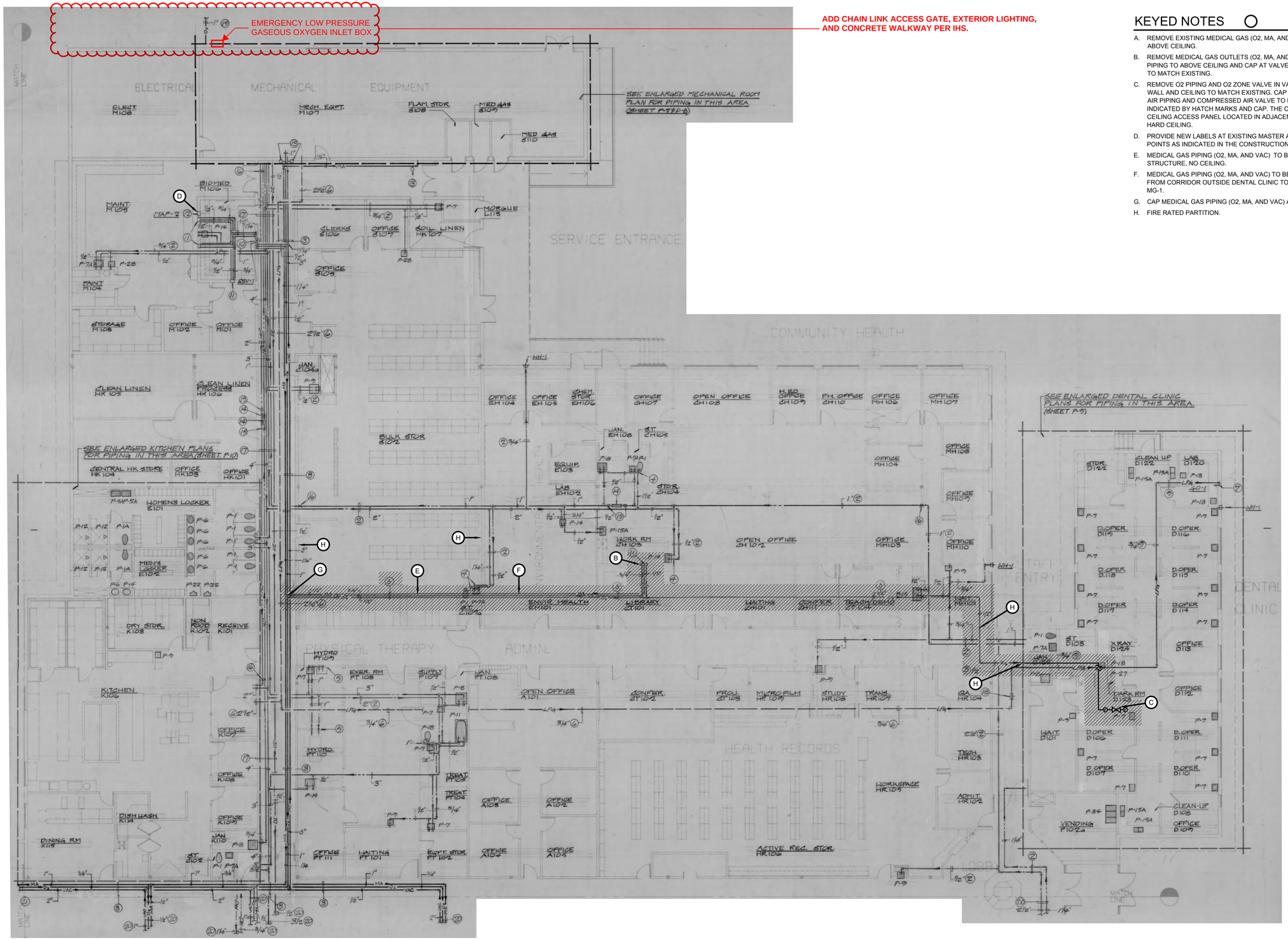

KEYED NOTES

A. REMOVE EXISTING MEDICAL GAS (O2, MA, AND VAC) BRANCH PIPING AND EXISTING VALVES ABOVE CEILING.

B. REMOVE MEDICAL GAS OUTLETS (O2, MA, AND VAC) COMPLETE AND ASSOCIATED MEDICAL GAS PIPING TO ABOVE CEILING AND CAP AT VALVES. CONTRACTOR SHALL PATCH WALL AND CEILING TO MATCH EXISTING.

C. REMOVE O2 PIPING AND O2 ZONE VALVE IN VALVE BOX ON WALL COMPLETE. PATCH AND REPAIR WALL AND CEILING TO MATCH EXISTING. CAP BOTH O2 OPENINGS IN VALVE BOX. COMPRESSED AIR PIPING AND COMPRESSED AIR VALVE TO REMAIN. REMOVE O2 PIPING BACK TO MAIN AS INDICATED BY HATCH MARKS AND CAP. THE CEILING ABOVE VALVE BOX IS GYPSUM BOARD WITH CEILING ACCESS PANEL LOCATED IN ADJACENT SPACE FOR ACCESS TO ATTIC SPACE ABOVE HARD CEILING.

D. PROVIDE NEW LABELS AT EXISTING MASTER ALARM PANEL PER NFPA 99. CONNECT NEW ALARM POINTS AS INDICATED IN THE CONSTRUCTION DOCUMENTS.

E. MEDICAL GAS PIPING (O2, MA, AND VAC) TO BE REMOVED IN THIS SPACE IS EXPOSED BELOW STRUCTURE, NO CEILING.

F. MEDICAL GAS PIPING (O2, MA, AND VAC) TO BE REMOVED IS LOCATED ABOVE LAY-IN CEILING FROM CORRIDOR OUTSIDE DENTAL CLINIC TO THIS SPACE, SEE GENERAL NOTE Q ON SHEET MG-1.

G. CAP MEDICAL GAS PIPING (O2, MA, AND VAC) AT MAINS.

H. FIRE RATED PARTITION.

AREA "C" - DOMESTIC WATER AND MEDICAL GASES PIPING PLAN

SCALE: 3/32" = 1'-0"

NORTH

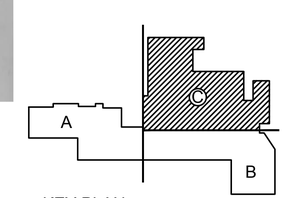

KEY PLAN
N.T.S.

REV	DATE	DESCRIPTION	BY
0	08/10/18	MEDICAL GAS UPGRADE - DESIGN	

ARCHITECTURAL | MECHANICAL | ELECTRICAL | PLUMBING

APPROVED

SHA - 1955 - INDIAN HEALTH SERVICE

DEPARTMENT OF HEALTH AND HUMAN SERVICES
INDIAN HEALTH SERVICE
OFFICE OF ENVIRONMENTAL HEALTH AND ENGINEERING
ALBUQUERQUE AREA OFFICE
5300 Homestead Road NE Albuquerque, New Mexico 87110

CROWNPOINT HEALTH CARE FACILITY
HWY JUNCTION 57, ROUTE 9 CROWNPOINT, NM 87313

MEDICAL GAS UPGRADE - DESIGN

AREA "C" PIPING PLAN

DWN BY: VICUNA
CKD BY: SWIDERSKI
SCALE: 3/32"=1'-0"
DATE: 08/10/2018

MG-4

PROJECT NUMBER: HHSI16120120000031
SHEET 05 OF 07

ATTACHMENT #1

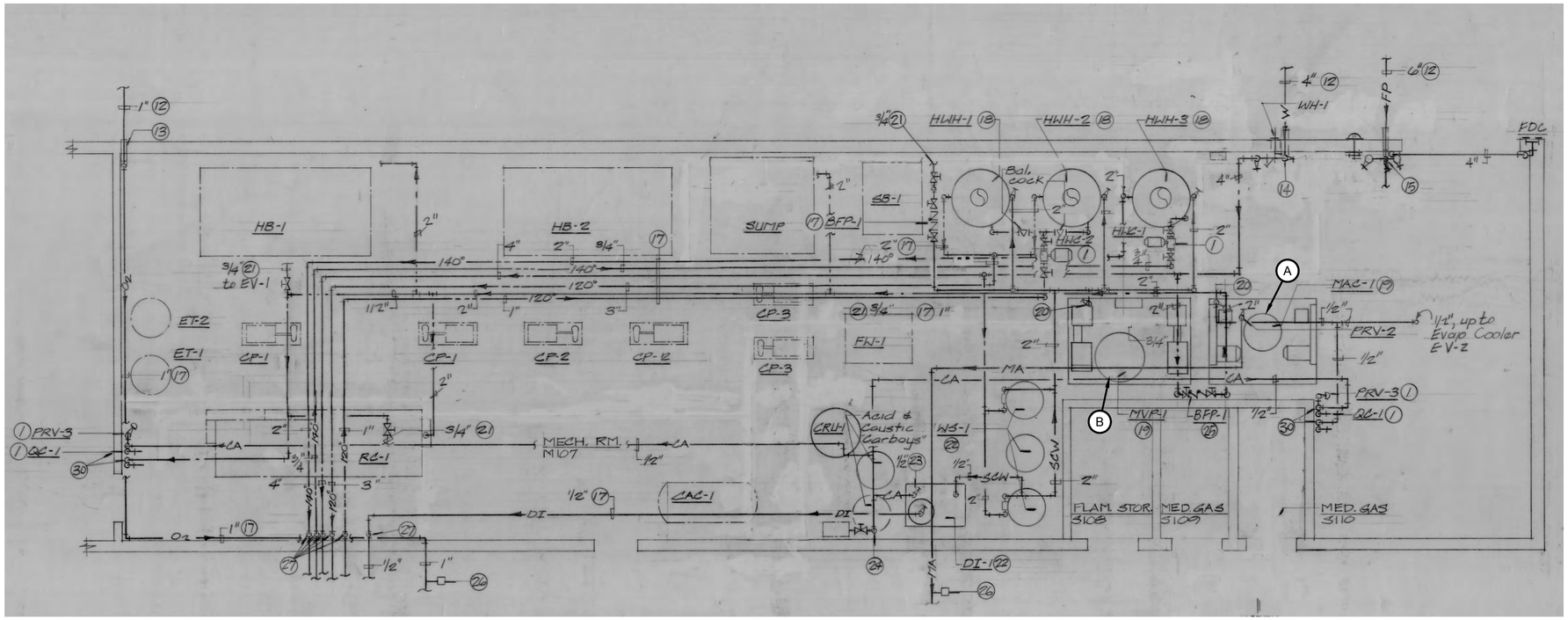

ENLARGED MECHANICAL ROOM - DOMESTIC WATER, OXYGEN & MED. AIR PIPING PLAN

SCALE: 1/4" = 1'-0"

NORTH

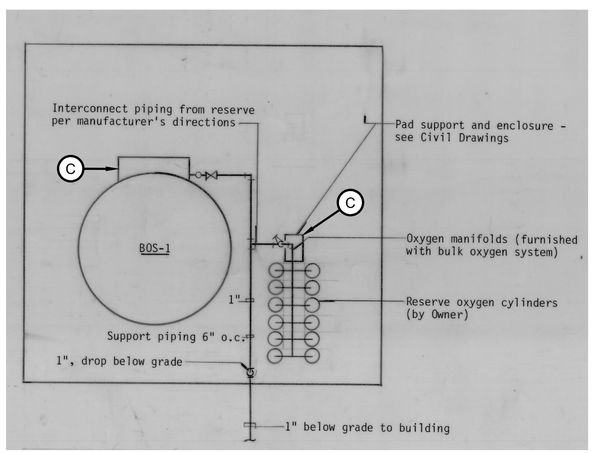

BULK OXYGEN STORAGE PLAN

SCALE: N.T.S.

NORTH

KEYED NOTES

A. EXISTING MEDICAL AIR COMPRESSOR SHALL BE REPLACED, REMOVE COMPLETE. REMOVE & REPLACE ALARM SENSORS FOR UNIT. REMOVE DOMESTIC WATER LINES AT EXISTING UNIT AND CAP AT MAINS. PROVIDE AND INSTALL NEW MEDICAL AIR COMPRESSOR PACKAGED UNIT (MAC-1). UNIT SHALL BE SKID MOUNTED AND LOCATED ON EXISTING HOUSEKEEPING PAD. INSTALL EQUIPMENT PER MANUFACTURER'S RECOMMENDATIONS AND DETAILS. PROVIDE AND INSTALL OUTSIDE AIR CONNECTIONS TO UNIT ACCORDING TO SECTION 5 OF NFPA 99. FURNISH NEW PIPING AND FITTINGS FOR UNIT CONNECTIONS TO EXISTING PIPING. PROVIDE SOURCE VALVE, PRESSURE REGULATORS, SIGNAGE PER NFPA 99, AND DRAIN TO MEET ALL REQUIRED CODE ITEMS. EXTEND LINE SIZE DRAINS TO FLOOR SINK LOCATED AT HOUSEKEEPING PAD. CONNECT NEW ALARMS TO MASTER ALARM LOCATED ON SHEET MG-4. COORDINATE FINAL EQUIPMENT LOCATION WITH MVP-1 TO MAINTAIN RECOMMENDED SERVICE CLEARANCES.

B. EXISTING MEDICAL VACUUM PUMP EQUIPMENT SHALL BE REPLACED, REMOVE COMPLETE. REMOVE & REPLACE ALARM SENSORS FOR UNIT. PROVIDE AND INSTALL NEW MEDICAL VACUUM PUMP PACKAGED UNIT (MVP-1). UNIT SHALL BE SKID MOUNTED AND LOCATED ON EXISTING HOUSEKEEPING PAD. INSTALL EQUIPMENT PER MANUFACTURER'S RECOMMENDATIONS AND DETAILS. PROVIDE AND INSTALL 1-1/2" EXHAUST PIPING AT BOTH BRAIDED FLEX CONNECTORS ON UNIT, MANIFOLD BOTH LINES TO A SINGLE STACK, RUN THROUGH ROOF, TURN DOWN AND SCREEN OPENING. GOOSENECK EXHAUST PIPE SHALL BE LOCATED 10'-0" AWAY FROM ALL AIR INTAKES ON ROOF. SEAL ROOF PENETRATION WEATHER TIGHT. FURNISH NEW 2" PIPING AND FITTINGS FOR CONNECTIONS TO EXISTING PIPE CONNECTIONS. INSTALL NEW ALARM SENSORS, BY PASS VALVE ASSEMBLY PER NFPA 99, AND SIGNAGE TO MEET ALL REQUIRED CODE ITEMS. CONNECT NEW ALARMS TO MASTER ALARM LOCATED ON SHEET MG-4. COORDINATE FINAL EQUIPMENT LOCATION WITH MAC-1 TO MAINTAIN RECOMMENDED SERVICE CLEARANCES.

C. EXISTING BULK OXYGEN STORAGE SHALL BE SERVICED BY CERTIFIED MEDICAL SYSTEMS TECHNICIAN. INSTALL NFPA COMPLIANT FINAL LINE ASSEMBLY. INSTALL REQUIRED PRESSURE SWITCH. INSTALL EMERGENCY OXYGEN SUPPLY CONNECTION (EOSC), FIELD VERIFY LOCATION AT TANK. INSTALL SOURCE VALVE TAG. INSTALL "IN USE" SWITCH AND RESERVE LOW PRESSURE SWITCHES. CONNECT TO MASTER ALARM PANEL LOCATED ON SHEET MG-4.

NO COMMENT

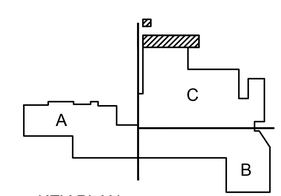

KEY PLAN
N.T.S.

REV	DATE	DESCRIPTION	BY
0	08/10/18	MEDICAL GAS UPGRADE - DESIGN	

APPROVED: ARCHITECTURAL | MECHANICAL | ELECTRICAL | PLUMBING

INDIAN HEALTH SERVICE - SHI - 1955

DEPARTMENT OF HEALTH AND HUMAN SERVICES
INDIAN HEALTH SERVICE
OFFICE OF ENVIRONMENTAL HEALTH AND ENGINEERING
ALBUQUERQUE AREA OFFICE
5300 Homestead Road NE Albuquerque, New Mexico 87110

CROWNPOINT HEALTH CARE FACILITY
HWY JUNCTION 57, ROUTE 9 CROWNPOINT, NM 87313
MEDICAL GAS UPGRADE - DESIGN
MECHANICAL ROOM PIPING PLAN & BULK OXYGEN STORAGE PLAN

DWN BY: VICUNA
CKD BY: SWIDERSKI
SCALE: 3/32"=1'-0"
DATE: 08/10/2018
MG-5
PROJECT NUMBER: HHSI16120120000 3I
SHEET 06 OF 07

ATTACHMENT #1

MOTOR CONTROL CENTER SCHEDULE-AUTOMATIC "MCCEA" (10) AVAILABLE SHORT CIRCUIT AMPS IS 8976 SYM.

MECH. EQUIP NUMBER	UNIT NO.	EQUIPMENT NAMEPLATE DESCRIPTION	HP	VOLTAGE	PHASE	F.S. BREAKER WITH LIMITER	POLES	TRIP SETTING	MAGNETIC STARTER	NEMA SIZE	PUSH BUTTON OR SELECTOR SW. P B	OFF ON	OFF AUTO	H O A	INTER-LOCK WITH	AMBER PILOT	RED PILOT	GREEN PILOT	AUX. CONTACTS NO	AUX. CONTACTS NC	FEEDER SIZE	NOTES
		SECTION "A"																				
MAC-1	A1a	MEDICAL AIR COMPRESSOR	2 @ 7.5	480	3	(3)	3	(3)													3 #10 & 1 #10 GND.-3/4" C.	BREAKER ONLY
MVP-1	A1b	MEDICAL VACUUM PUMP	2 @ 5	480	3	(3)	3	(3)													3 #12 & 1 #10 GND.-3/4" C.	BREAKER ONLY
DAC-1	A2a	DENTAL AIR COMPRESSOR	2 @ 5	480	3	(3)	3	(3)													3 #12 & 1 #10 GND.-3/4" C.	BREAKER ONLY
DVP-1	A2b	DENTAL VACUUM PUMP	2 @ 5	480	3	(3)	3	(3)													3 #12 & 1 #10 GND.-3/4" C.	BREAKER ONLY
	A3a	DIESEL FUEL PUMP	3/4	480	3	(3)	3	(3)													3#12 & 1#10 GND. - 3/4" C.	BREAKER ONLY
EVP-1	A3b	EVACUATION VACUUM PUMP-DENTAL	1	480	3	(5)	3	(3)													3#12 & 1#10 GND- 3/4"C.	BREAKER ONLY
	A4	SPARE		480	3	(4)	3	(4)	•	1				•	(6)		•	•				
	A5	SPARE		480	3	(4)	3	(4)	•	1				•	(6)		•	•				
	A6	INCOMING LINE		480	3		3															

NOTES

(1) FIRE ALARM SYSTEM FAN SHUTDOWN CONTACT. INTERLOCK WITH SHUTDOWN RELAY PER CONTROL LADDER DIAGRAM ON SHEET E-19.

(2) AUTOMATIC MICROPROCESSOR CONTROL (M) CONTROLLER IS LOCATED IN MAINTENANCE SUPERVISORS OFFICE. INSTALL INTERLOCK WIRING PER CONTROL SYSTEM MANUFACTURERS INSTRUCTIONS.

(3) PROVIDE MOTOR CIRCUIT PROTECTOR BREAKER RATING AND TRIP SETTING BASED ON ACTUAL MOTOR NAMEPLATE DATA OF MOTOR BEING FURNISHED ON PROJECT. THIS MUST BE COORDINATED WITH DIVISION 15 OF SPECIFICATIONS.

(4) BREAKER RATINGS AND TRIP SETTINGS FOR SPARE UNITS SHALL BE BASED ON SPARE STARTERS SIZES SPECIFIED. THE RATINGS AND TRIPS SHALL BE MIXED BETWEEN SPARES TO OFFER MAXIMUM FLEXIBILITY.

(5) REFER TO ASSOCIATED CONTROL LADDER DIAGRAMS ON SHEET E 19 AND/OR E20 TO VERIFY INTERLOCK REQUIREMENTS WITH OTHER SYSTEMS. IN ADDITION TO THE NUMBER OF N.O. AND N.C. AUXILIARY CONTACTS REQUIRED IN A STARTER CIRCUIT BY THE CONTROL LADDER DIAGRAMS, ONE(1) SPARE N.O. CONTACT AND ONE (1) SPARE N.C. CONTACT SHALL ALSO BE PROVIDED.

(6) SPARE STARTER UNITS SHALL BE PROVIDED WITH TWO(2) N.O. CONTACTS AND TWO(2) N.C. CONTACTS.

(7) ROUTE WIRING TO FAN "ON" STATUS LAMPS IN GRAPHIC FIRE ALARM ANNUNCIATORS.

(8) INSTALL CONTROL RELAY IN NEMA 1 ENCLOSURE WITH SINGLE FORM "C" CONTACTS. PARALLEL HIGH AND LOW SPEED CONTACTS FOR SINGLE STATUS OUTPUT.

(9) INSTALL CONTROL RELAY IN NEMA 3R ENXLOSURE WITH SINGLE FORM "C" CONTACT. CONNECT TO "RUNNING" LAMP IN BUILDING MEDICAL AND SECURITY ALARM PANEL.

(10) 600 AMP MAINS, 480 VOLT-3Ø-3W PLUS GROUND.

(11) 800 AMP MAINS, 480 VOLT-3Ø-3W PLUS GROUND.

MCCEA SCHEDULE AND NOTES

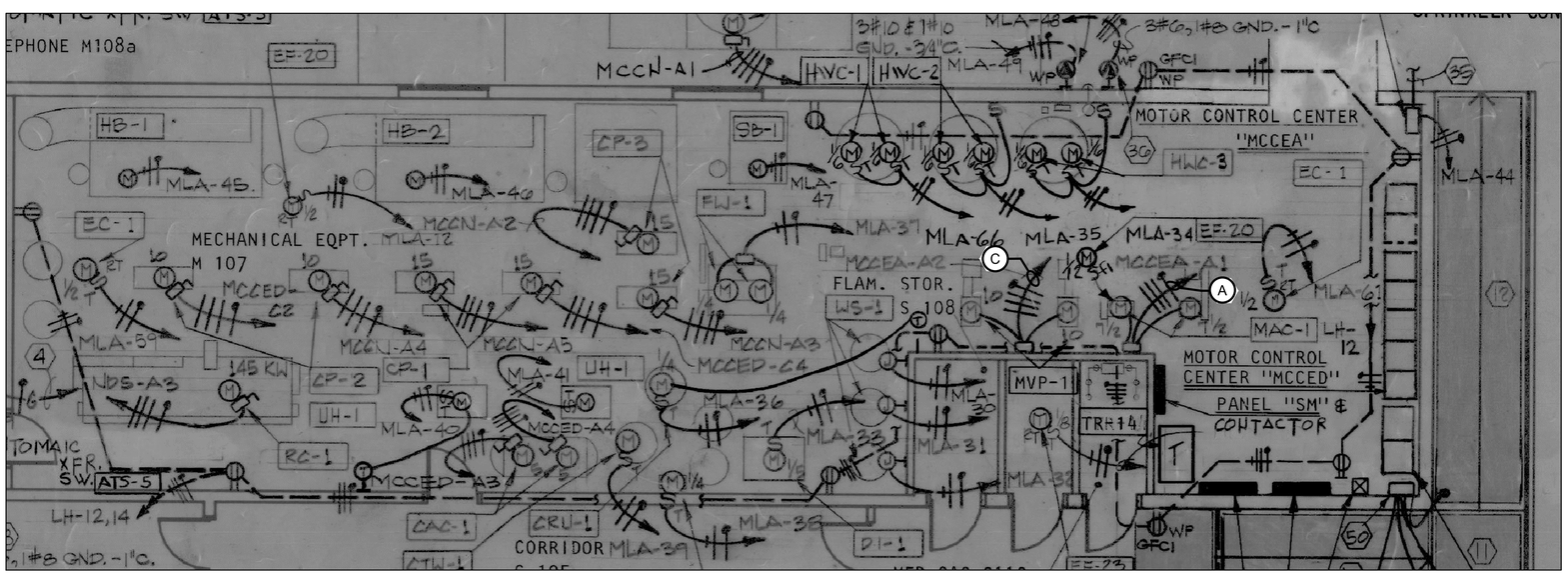

PARTIAL POWER PLAN OF MECH EQUIP ROOM 107

KEYED NOTES

A. DISCONNECT FEEDER FROM MCCEA TO MEDICAL AIR COMPRESSOR MCA-1 FOR MECH CONTRACTOR TO REPLACE MAC-1. REPLACE EXISTING MOTOR CIRCUIT PROTECTOR WITH EATON SERIES G CAT# HMCPEO 30 HIC CAM SETTING C OR EQUAL. RECONNECT FEEDER TO NEW MEDICAL AIR COMPRESSOR. CHECK ROTATION BEFORE FINAL CONNECTIONS ARE MADE. CONTRACTOR COORDINATE STARTER/OVERLOADS WITH NEW MOTOR NAMEPLATE DATA.

B. AS BUILD MCCEA SCHEDULE AND PROVIDE TO I.H.S. FOR RECORD PURPOSES.

C. DISCONNECT FEEDER FROM MEDICAL VACUUM PUMP TO MCCEA FOR MECH CONTRACTOR TO REPLACE MVP-1. REPLACE EXISTING MOTOR CIRCUIT PROTECTOR WITH EATON SERIES G CAT# HMCPEO 30 HIC CAM SETTING D OR EQUAL. RECONNECT FEEDER TO NEW VACUUM PUMP. CHECK ROTATION BEFORE FINAL CONNECTIONS ARE MADE. CONTRACTOR COORDINATE STARTER/OVERLOADS WITH NEW MOTOR NAMEPLATE DATA.

REFERENCE REPORT

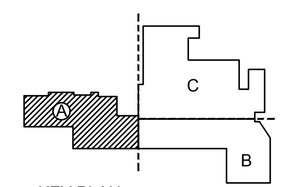

KEY PLAN
N.T.S.

REV	DATE	DESCRIPTION	BY
0	08/10/18	MEDICAL GAS UPGRADE - DESIGN	

APPROVED: ARCHITECTURAL | MECHANICAL | ELECTRICAL | PLUMBING

INDIAN HEALTH SERVICE - SHA - 1955

DEPARTMENT OF HEALTH AND HUMAN SERVICES
INDIAN HEALTH SERVICE
OFFICE OF ENVIRONMENTAL HEALTH AND ENGINEERING
ALBUQUERQUE AREA OFFICE
5300 Homestead Road NE Albuquerque, New Mexico 87110

CROWNPOINT HEALTH CARE FACILITY
HWY JUNCTION 57, ROUTE 9 CROWNPOINT, NM 87313
MEDICAL GAS UPGRADE - DESIGN
PARTIAL ELECTRICAL POWER PLAN
& MOTOR CONTROL CENTER SCHEDULE

DWN BY: DJ
CKD BY: RK
SCALE: NOT TO SCALE
DATE: 08/10/2018
E-1
PROJECT NUMBER: HHSI16120120000031
SHEET 07 OF 07

FIGURE 1. EXISTING MEDICAL AIR COMPRESSOR

FIGURE 2. EXISTING MEDICAL AIR COMPRESSOR PANEL

FIGURE 3. EXISTING MEDICAL AIR COMPRESSOR NAME PLATE

FIGURE 4. EXISTING MEDICAL AIR COMPRESSOR MCP - LOCKED OUT / TAGGED OUT

FIGURE 5. EXISTING MEDICAL VACUUM PUMP

FIGURE 6. EXISTING MEDICAL VACUUM PUMP PANEL

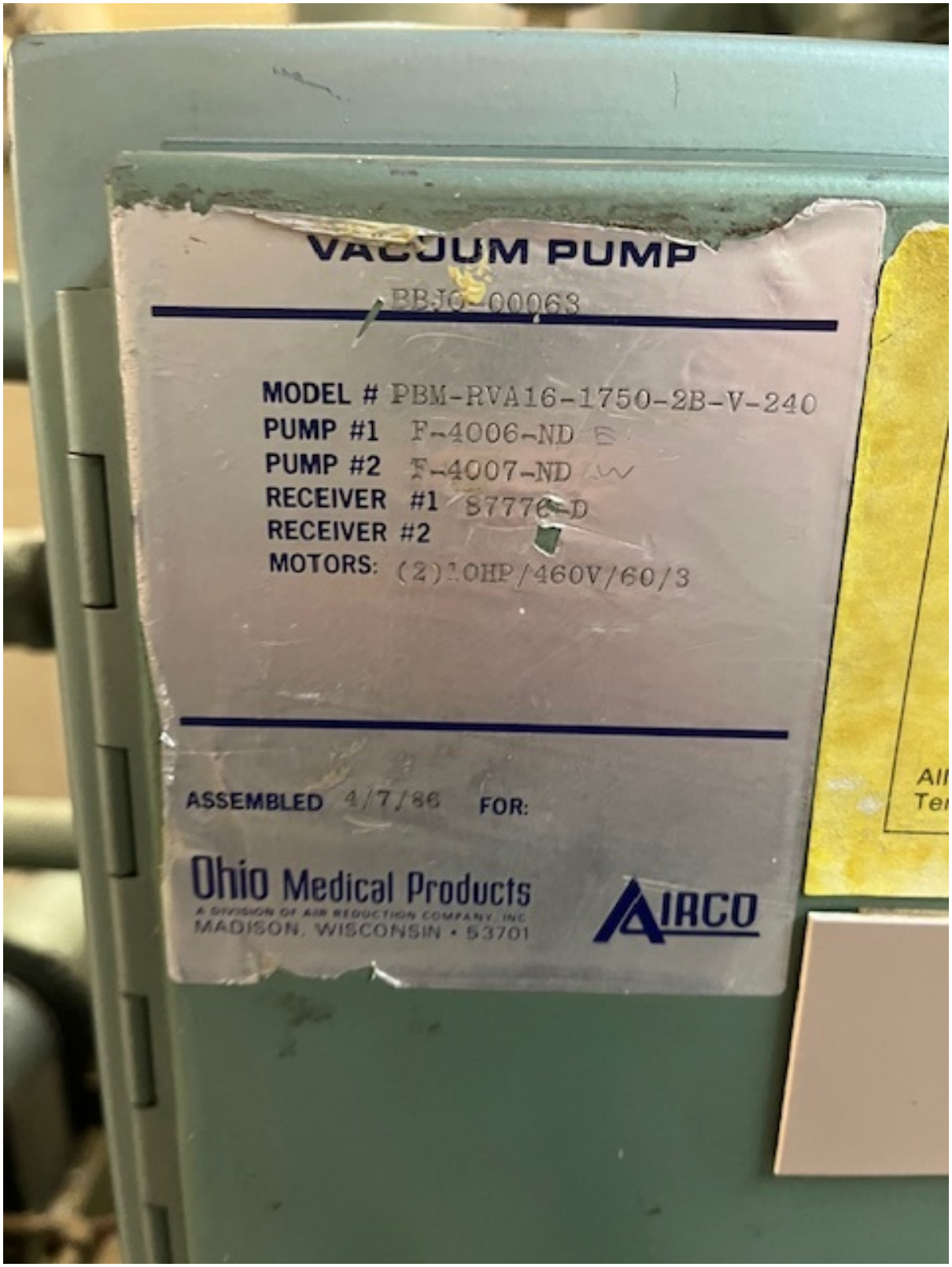

FIGURE 7. EXISTING MEDICAL VACUUM PUMP NAME PLATE

FIGURE 8. EMERGENCY LOW PRESSURE GASEOUS OXYGEN INLET BOX

FIGURE 9. EMERGENCY LOW PRESSURE GASEOUS OXYGEN INLET BOX

Ohio Medical

MAC-1

ATTACHMENT #3

A500-T2-H120 Reciprocating Medical Air System

System is NFPA compliant and has modular construction and interconnecting piping.

PUMP MODULE

The belt driven oil-less piston compressor delivers pressures up to 115 psi. Each module includes the compressor; motor; drive belts with belt guard; inlet filter; isolation valve; aftercooler; temperature switch for each cylinder, unloader solenoid, and relief valve.

AIR TREATMENT MODULE

The system's air treatment module features dual desiccant dryers configured for energy savings. They purge only when needed per the dew point setting. The dew point and CO transducers are integrated with the electrical panel. The module also contains prefilters, after filters, and activated carbon filters. Final line pressure regulators with gauges and relief valves are also part of the air treatment module.

AIR RECEIVER

The receiver is constructed to ASME standards and is galvanized for corrosion resistance. A source isolation valve and 3 valve bypasses are provided with the receiver module. A pressure gauge and relief valve are included, along with a sight window and electric auto drain. Mounting pads and flexible connectors are provided.

CONTROL PANEL

The UL listed electrical control panel features a high-definition color touch screen that can be set up externally without the use of toggle switches. The panel displays multiple conditions, including compressor running status, elapsed hours, pressure level, and audio/visual alarms.

Standard features include lag alarm, automatic compressor alternation, adjustable minimum run timer, adjustable pressure settings, adjustable screen brightness, alarm history registry, and data logging. The panel has standard dry contacts and Modbus interface with building management systems. Ethernet and BACnet are available as options. The panel's maintenance menu includes service items and maintenance warnings, and it is programmed for both English and Spanish languages.

Configuration	Duplex Tank Mount
System Capacity*	23.0 SCFM @ 50 psi 60 Hz. 19.2 SCFM @ 50 psi 50 Hz.
Horsepower (Each Pump)	5 HP
Horsepower (Total System)	10 HP
Available Voltage	208/230/460 v. 3 phase 60 Hz. 380 v. 3 phase 50 Hz. Contact Factory for other voltages
Full Load Amps 3 ph.	208 volts: 37.6 230 volts: 34.2 380 volts: 19.6 460 volts: 17.2
Tank Size	120 gallon horizontal
Key Options	Bacterial filters for dryer/filter skid. Can be configured for lab use without lag alarm. Expandable for additional compressors.

Click here for compressor specifications and industry-leading parts support.

*System capacity is stated with one pump in reserve per NFPA. Capacity based on operation at sea level. For higher altitude, contact factory for adjusted capacity.

For more information on system accessories, visit ohiomedicalparts.com

SYSTEM MODEL NO.	PART NO.	HP EACH	SCFM/ACFM @ 50 PSIG EACH	SCFM/ACFM @ 100 PSIG EACH	DESIGN CAPACITY (@ 50PSIG EACH)	RECEIVER SIZE (GALLONS)	PUMP DISCHARGE NPT	ESTIMATED SYSTEM WEIGHT (LB)
A500B-T2-DD	AOM500-460-T2-H120-DD	5.0	23.0	19.5	23.0	120	1"	1350

SPACE ALLOWANCE FOR MAINTENANCE = 3 FT. ON ALL SIDES. MORE SPACE IS REQUIRED FOR OPENING OF LARGER PANEL DOOR.

TABLE 1

SYSTEM LISTED ARE 460V. IF ANOTHER VOLTAGE IS REQUIRED, USE THE FOLLOWING PART NUMBERS.

VOLTAGE	SYSTEM P/N	PUMP MODULE P/N	TRIP MODULE P/N
208-60-3	AOM500-208-T2-H120-DD	100-0221	214546
230-60-3	AOM500-230-T2-H120-DD	100-0221	214546
380-50-3	AOM500-380-T2-H120-DD	100-0221	214637

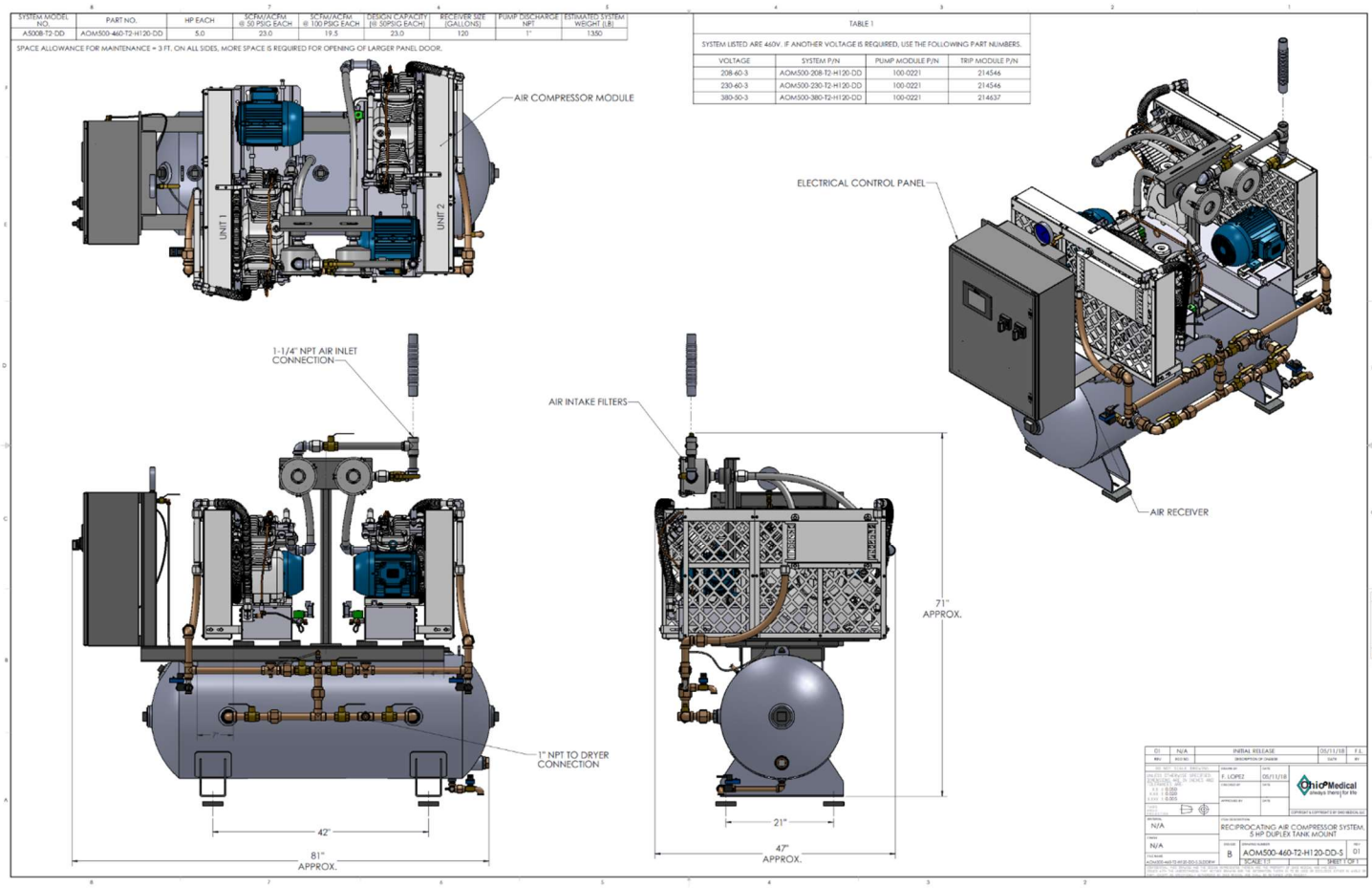

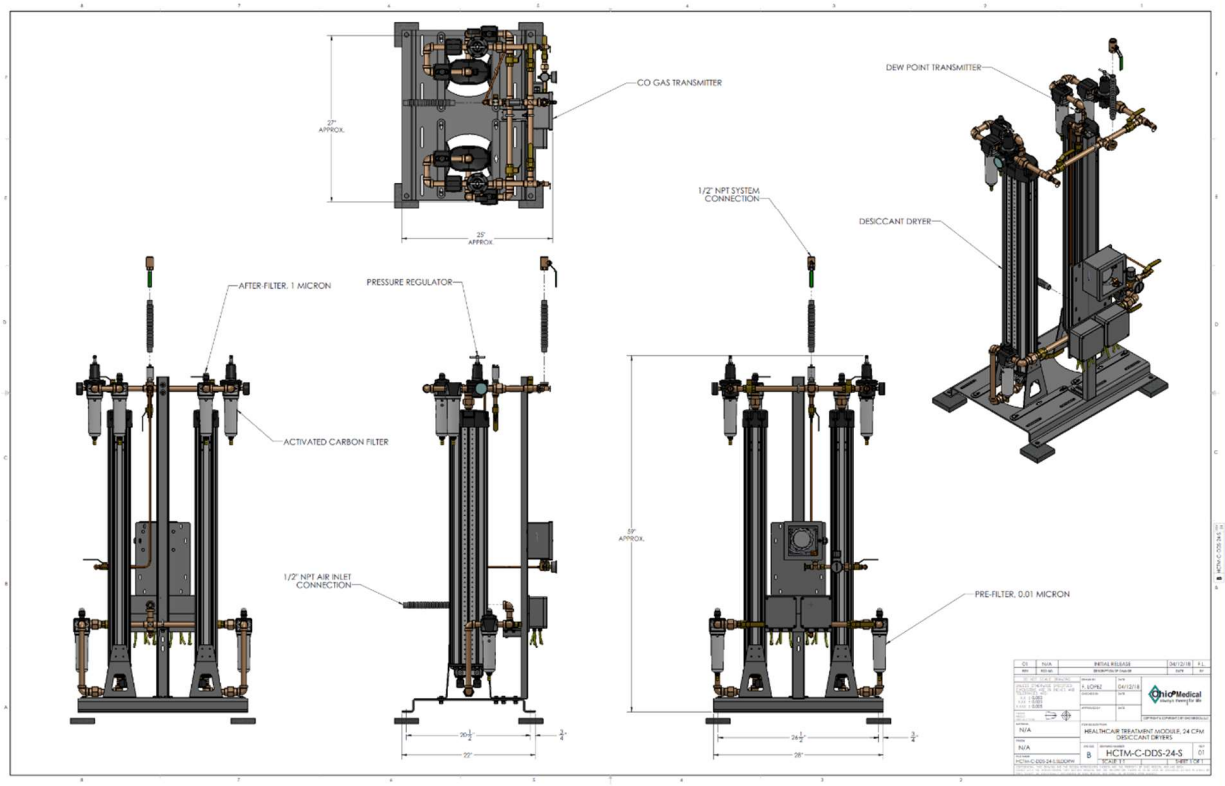

For more information on system accessories, visit ohiomedicalparts.com

S750-S2-V120 Rotary Vane Medical Vacuum System

System is NFPA compliant and has modular construction and interconnecting piping.

PUMP MODULE

Oil sealed rotary vane vacuum pump with NEMA motor. Each pump module is equipped with an inlet filter, check valve, pump isolation valve, and temperature switch.

SYSTEM CONTROLS

The UL listed electrical control panel features a high-definition color touch screen that can be set up externally without the use of toggle switches. The panel displays multiple conditions, including pump running status, elapsed hours, vacuum level, and audio/visual alarms.

Standard features include lag alarm, automatic pump alternation, adjustable minimum run timer, adjustable vacuum settings, adjustable screen brightness, alarm history registry, and data logging. The panel has standard dry contacts and Modbus interface with building management systems. Ethernet and BACnet are available as options. The panel's maintenance menu includes service items and maintenance warnings, and it is programmed for both English and Spanish languages.

VACUUM RECEIVER

Constructed to ASME standards and rated for full vacuum. Equipped with valved bypass, high visibility vacuum gauge, source isolation valve, and a manual drain valve. Mounting pads and flex connectors supplied for field installation.

KEY OPTIONS

Variable Speed Drive Electrical Panel
Configurable for Lab or Industrial Applications
Gas Purge System for Lab use

Configuration	Duplex Stack Mount
System Capacity*	60.1 SCFM @ 19" Hg. 60 Hz. 50 SCFM @ 19" Hg. 50 Hz.
Horsepower (Each Pump)	7.5 HP
Horsepower (Total System)	15 HP
Available Voltage	208/230/460V 3PH 60 Hz. 380V 3 PH 50 Hz. Contact Factory for other voltages
Full Load Amps 3 ph.	208 Volts: 49.6 230 Volts: 45.1 380 Volts: 27.4 460 Volts: 22.6
Tank Size	120 gallon vertical
Bacterial Filter Bank (option)	BOM-MED FB-2

Click here for pump specifications and industry-leading parts support

*System capacity is stated with one pump in reserve per NFPA. Capacity based on operation at sea level. For higher altitude, contact factory for adjusted capacity.

For more information on system accessories, visit ohiomedicalparts.com

SYSTEM MODEL NO.	PART NO.	HP EACH	SCFM/ACFM @ 19" Hg EACH	SCFM/ACFM @ 25" Hg EACH	DESIGN CAPACITY (@19" Hg EACH)	RECEIVER SIZE (GALLONS)	PUMP INLET NPT	ESTIMATED SYSTEM WEIGHT (LB)
S7508-ST2	S750(C)-460-S2-V120	7.5	60.0 / 164.4	24.5 / 147.0	60.0	120	2"	1500

SPACE ALLOWANCE FOR MAINTENANCE = 3 FT. ON ALL SIDES, MORE FOR OPENING OF LARGER PANEL DOOR.

TABLE 1

SYSTEM LISTED ARE 460V. IF ANOTHER VOLTAGE IS REQUIRED, USE THE FOLLOWING PART NUMBERS.

VOLTAGE	SYSTEM P/N	PUMP MODULE P/N	TRIP MODULE P/N
208-60-3	S750(C)-208-S2-V120	100-0205	214546
230-60-3	S750(C)-230-S2-V120	100-0205	214546
380-50-3	S750(C)-380-S2-V120	100-0205	214546

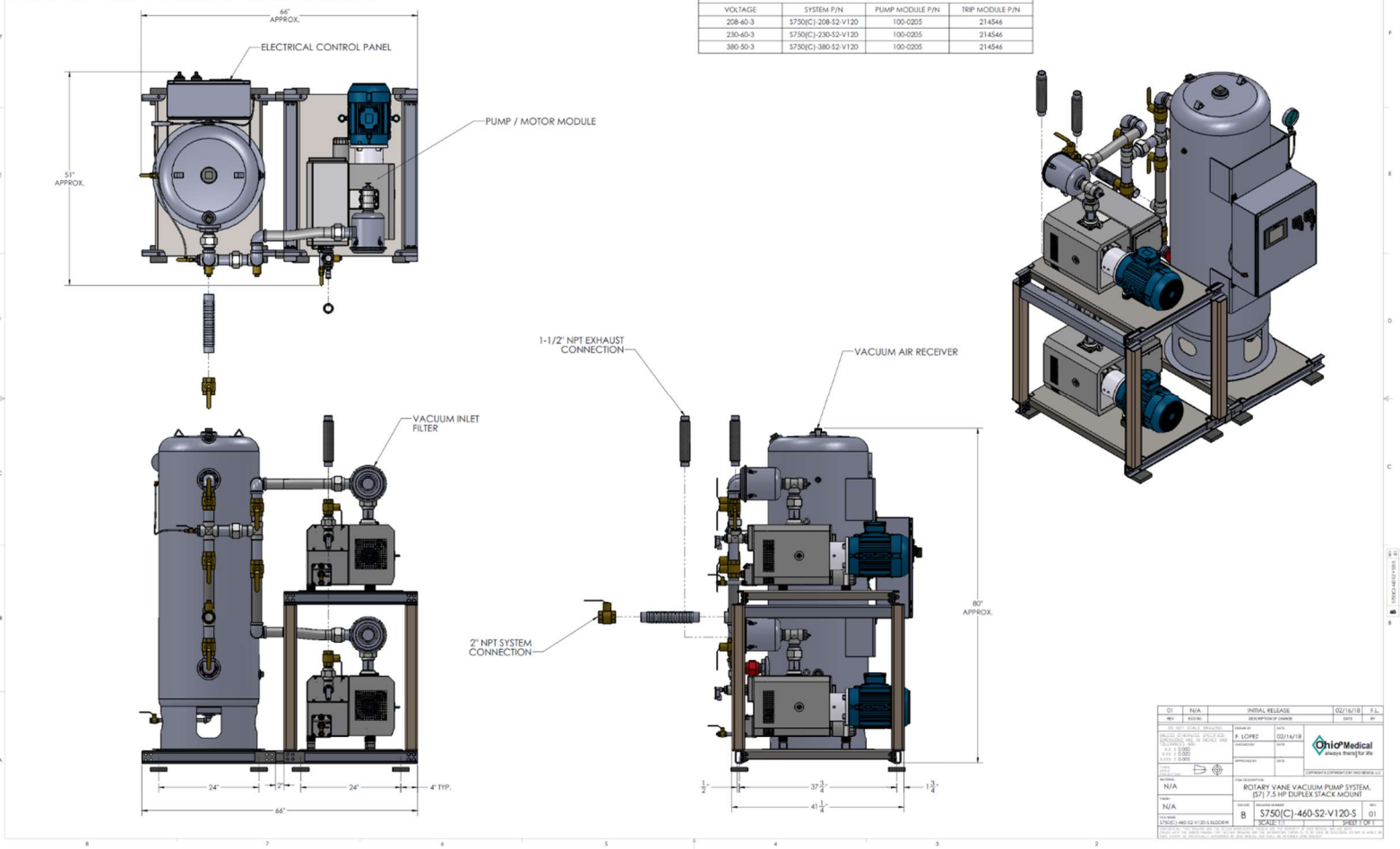

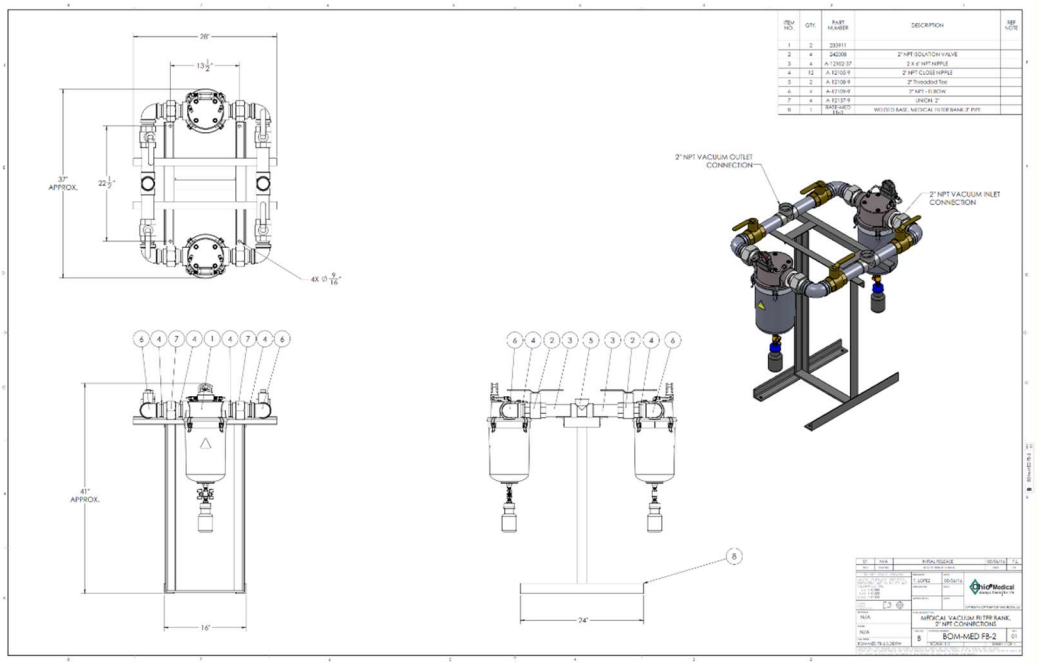

For more information on system accessories, visit ohiomedicalparts.com

Multiple Zone Valve Box

4” & 6” deep box

FEATURES

- Full port design
- Blow-out proof stem
- Cleaned for medical gas service
- Teflon seals
- Dual gauge port on pipe extension

SPECIFICATIONS

Zone valve boxes shall be Ohio Medical® series. Each zone valve box shall comply with NFPA® 99 and will consist of a recessed steel box, full port three piece ball valve(s) and a removable window. Boxes are available to accommodate one to five ball valves.

The zone valve box shall be constructed of 18 gauge steel and be painted white. The box shall be equipped with adjustable mounting brackets for the purpose of in-wall mounting. The brackets shall allow the box to accomrnodate wall thicknesses up to 7/8” (22 mm).

The valve box frame shall be constructed of aluminum; the frame’s surface shall be flat without indentations, to facilitate cleaning. The frame shall be mounted to the valve box by means of standard sheet mætal screws. A front channel shall allow for insertion of the removable window.

The tinted transparent front window shall be constructed of plexiglas which will allow monitoring of the valve(s) and gauge(s). The window will be equipped with a center mounted ring to allow the window to be removed from the valve box frame. The window shall be able to be reinstalled without the use of tools, but only with the valve(s) in the open position. The window shall be labeled “CAUTION MEDICAL GAS SHUT-OFF VALVE - CLOSE ONLY IN EMERGENCY”.

The valves shall be oxygen cleaned, full port, three piece ball-type with flanges to allow easy service and installation. The valve shall have a bronze body and a blow-out proof stem. The valve ball shall be bronze chrome plated and the seats and packing shall be Teflon® (PTFE). The valve shall have a pressure rating of 600 psig, and be hydrostatically tested.

Type “K” copper pipe extensions that are cleaned for medical gas service shall be fitted into each side of the valve. Dual gauge ports shall be drilled into the pipe extensions for the purpose of inserting gauges. The gauges shall have a 2” (50 mm) dial, and be ASME® B40.1 Grade B. The valve assembly shall be plugged or capped to prevent contamination.

Each valve shall have a bracket used to identify the gas being handled by means of a gas specific label.

A lever type handle shall be used to operate the valve(s). The valve shall be changed from fully open to fully closed through a quarter turn of the handle. A label cluster is included with each valve box.

Part Numbers	
261901-XX	Single Zone Valve Box (15”)
261902-XXXX	Double Zone Valve Box (15”)
261903-XXXXXX	Triple Zone Valve Box (15”)
261904-XXXXXXXX	Quadraplex Zone Valve Box (24”)
261905-XXXXXXXXXX	Quintuplex Zone Valve Box (24”)

Replace XX with		
	05	½”
	07	¾”
	10	1”
	12	1 ¼”
	15*	1 ½”
	20*‡	2”

** Valves 1 ½” and larger requires a blank space between the next valve*

‡ Requires a 6 ½” deep box

MGVB-1, 2, 3, & 4

ATTACHMENT #3

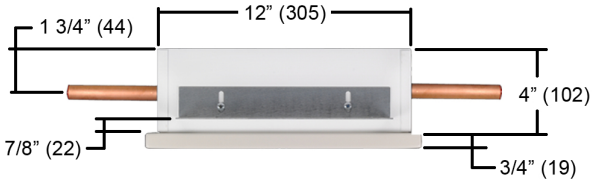

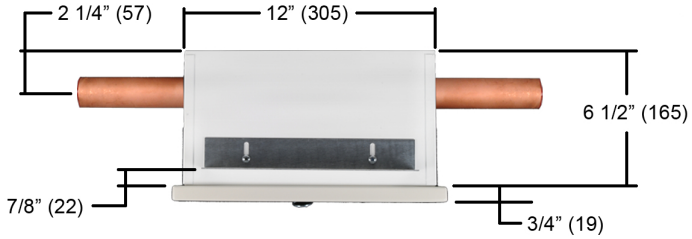

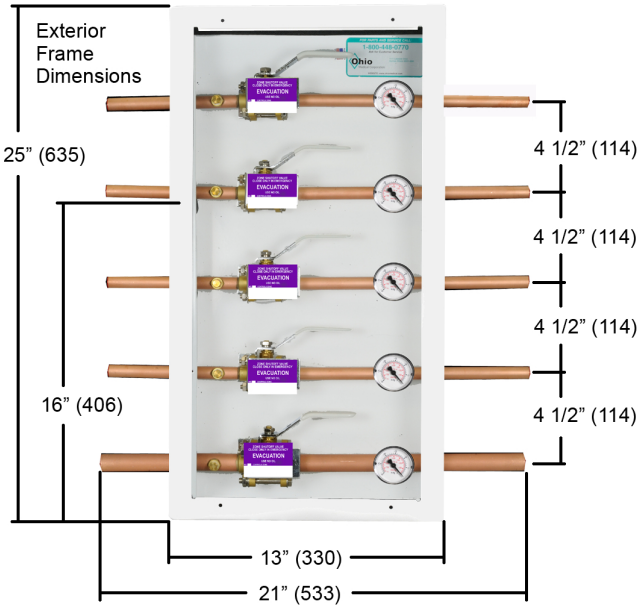

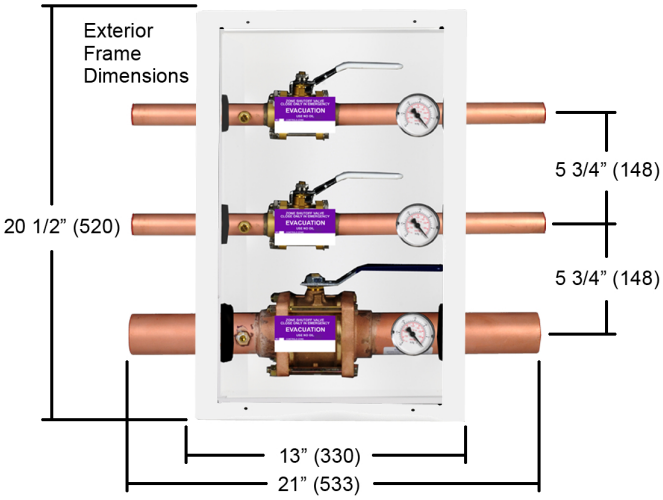

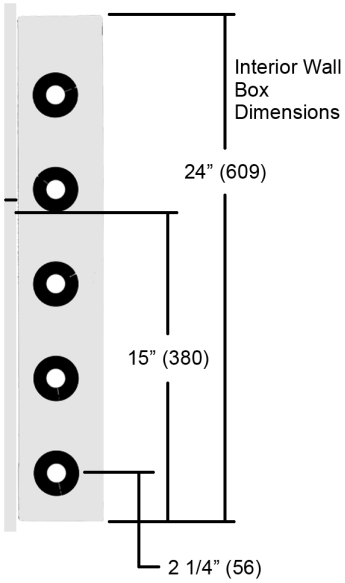

4" Deep Box

Dimensions in inches (mm)

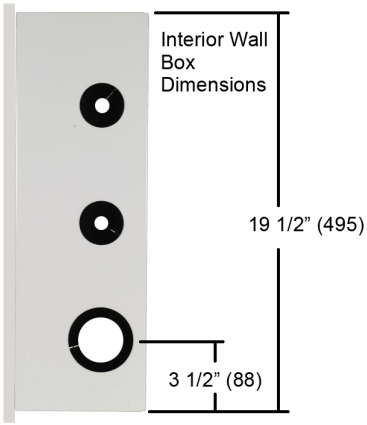

6" Deep Box

© 2022 Ohio Medical LLC. This document contains information that is proprietary and confidential to Ohio Medical LLC. Use of this information is under license from Ohio Medical LLC. Any use other than that authorized by Ohio Medical LLC is prohibited. Ohio Medical LLC, Ohio Medical and the Ohio Medical LLC logo are registered trademarks of Ohio Medical LLC. ASME is a registered trademark of American Society of Mechanical Engineers NFPA is a registered trademark of National Fire Protection Association, Inc. Teflon is a registered trademark of E. I. du Pont de Nemours and Company.

Ohio Medical LLC
1111 Lakeside Drive
Gurnee, IL 60031 USA
866.549.6446 | ohiomedical.com

255436 (Rev. 6) 06/2022

Ohio® Medical

GAUGES

For Zone Valve Boxes and Isolation Valves

SPECIFICATION

Size	2”	
Style	ASME B40.1 Grade B	
Range	0 - 30” Hg	(0 - 700 mm Hg)
	0 - 100 PSI	(680 KPA)
	0 - 300 PSI	(2050 KPA)
Temperature	Ambient -13ºF to 140ºF (-25ºC to 122ºC)	
Media	Max 140ºF	(122ºC)
Connection	1/8” (6.35 mm) NPT Center Back	
Bourdon Tube	Copper Alloy	
Movement	Copper Alloy	
Dial	White Plastic with Stop Pin	
Pointer	Black Aluminum	
Case	Black Steel	
Window	Snap-in Acrylic	

Vacuum

Low Pressure

High Pressure

Part Numbers

223016	High Pressure 0 - 300 PSIG
223017	Vacuum 0-30 Hg
223018	Low Pressure 0 - 100 PSIG

© 2017 Ohio Medical LLC. All Rights Reserved.
This document contains information that is proprietary and confidential to Ohio Medical. Use of this information is under license from Ohio Medical. Any use other than that authorized by Ohio Medical is prohibited.
Ohio Medical, and the Ohio Medical logo are registered trademarks of Ohio Medical LLC.

Ohio® Medical
1111 Lakeside Drive | Gurnee, IL 60031
Phone: 1-866-549-6446 | www.ohiomedical.com

Ohio® Medical

AMMGAP-1

ATTACHMENT #3

Master Alarm Specifications

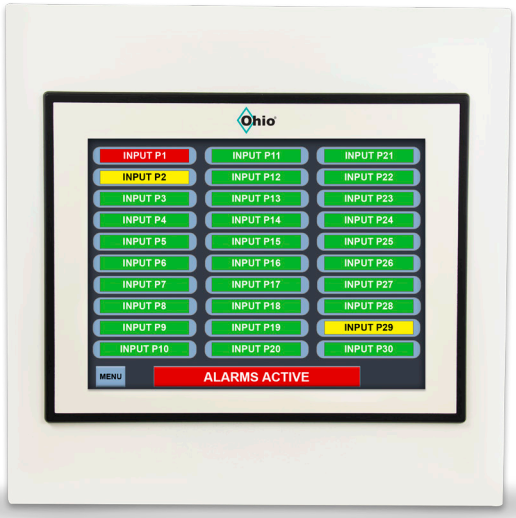

Master Alarm

- 12.1" Liquid Crystal Display (LCD)
- Supply Power: 100V-240V AC
- Circuit breaker protected
- Alarm Point Inputs: Up to 30 points
- Dry Contacts: 30 (optional)
- Remote alarm communications:
  Modbus (Standard); BACnet (Optional); Ethernet (Optional)
- NFPA® 99 Compliant
- Manufactured in an ISO 9001 and 13485 Environment
- Enclosure materials constructed of heavy duty steel to protect internal components from adverse conditions and electrical interference
- Alarm conditions shall be identified via audible alarms and visual indicators
- Audible Alarm-Point Silence Button provided to silence the alarm (field adjustable duration)
- Audible Alarm Horn is adjustable
- Audible Alarm is to remain in an alarm state until the condition that initiated the alarm condition is corrected
- Visual Alarm-Point Indicators shall illuminate and/or flash even if the Audible Alarm is silenced and, to remain in an alarm state until the condition initiating the alarm is corrected

Panel Settings

(completely field adjustable and password protected)

- ALL settings accomplished via front screen panel
- Selectable English or Spanish Instructions
- Password Protected (Customizable)
- Field Adjustable 0-30pt alarm set-up/viewing
- Adjustable N.O./N.C. input selection with **Set-All** feature
- Adjustable 10pt, 20pt or 30pt; per-screen-viewing
- Defaults to **View All Alarm Points** in an alarm condition
- Pre-configured or customizable Alarm Point names
- Auto scroll with manual scroll options for non-alarm condition viewing
- Alarm Point Events are logged and may be viewed/cleared as **Individual** or **All Alarm Events**
- Long-term data logging – via SD card
- **Maintenance Mode** for set-up and alarm point maintenance

Product Dimensions (Inches)

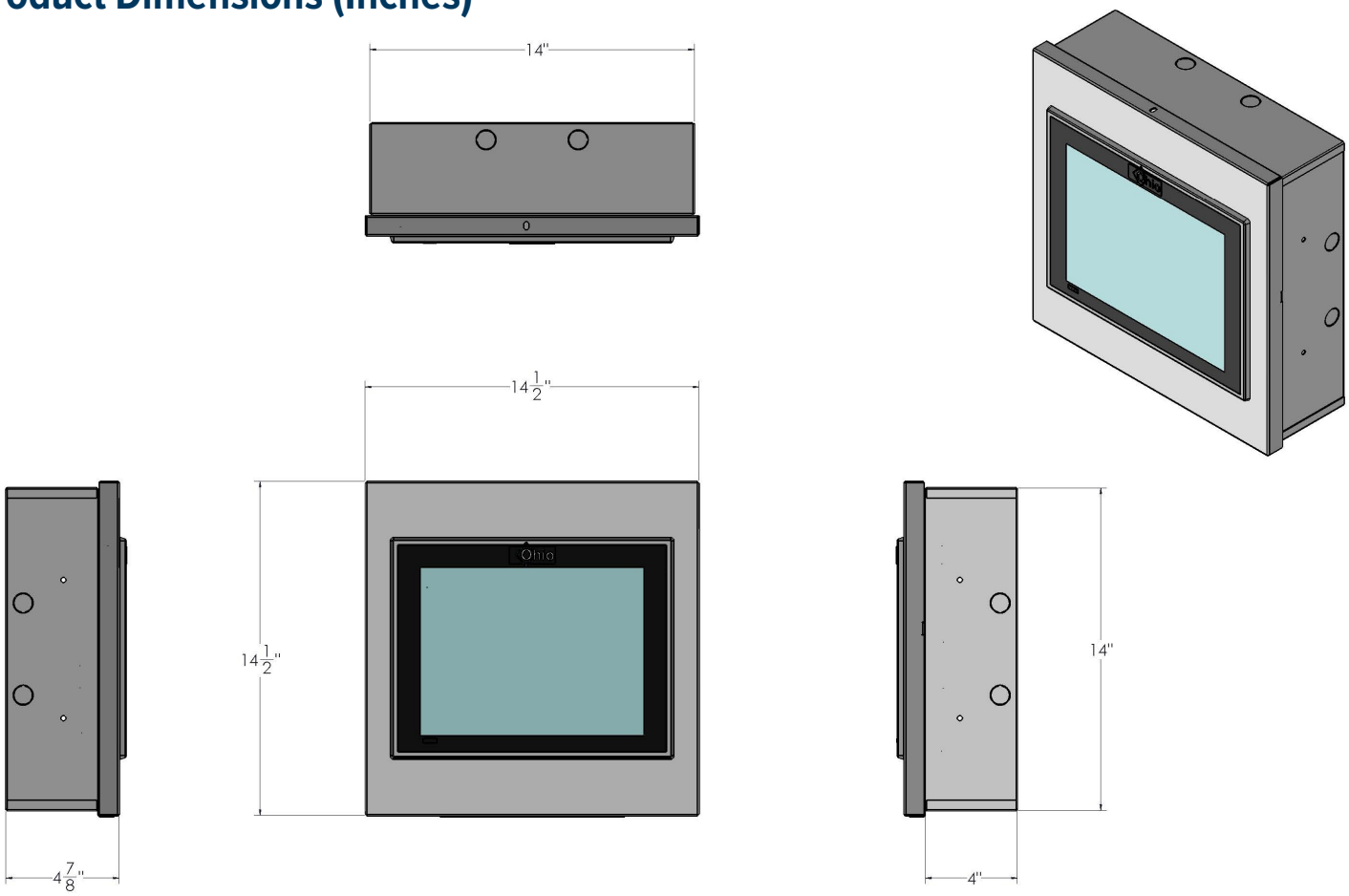

Ordering Information

Part Number	Description*
263748**	Mast Alarm HMI 30 Point
263748-C**	Master Alarm HMI 30 Point with Dry Contracts
263748-B	Master Alarm HMI 30 Point with BACnet
263748-E	Master Alarm HMI 30 Point with Ethernet
263748-CE	Master Alarm HMI 30 Point with Dry Contacts & Ethernet
263748-CB	Master Alarm HMI 30 Point with Dry Contacts & BACnet

* All units come with 12.1" Full Color LCD Screen and can be set-up for 1 to 30 Alarm Points inputs.
** Modbus built into the unit.

© 2019 Ohio Medical LLC. This document contains information that is proprietary and confidential to Ohio Medical LLC. Use of this information is under license from Ohio Medical LLC. Any use other than that authorized by Ohio Medical LLC is prohibited. Ohio Medical, the Ohio Medical logo, Amvex, and the Amvex logo are registered trademarks of Ohio Medical LLC.

Ohio Medical LLC
1111 Lakeside Drive
Gurnee, IL 60031 USA
866.549.6446 | ohiomedical.com
550730 (Rev. 1) 9/19

Wall Outlets

FEATURES AND BENEFITS

- Accepts Chemetron/Allied®, Ohio Diamond, HillRom® Beacon Medaes, Puritan Bennett and DISS specific adapters
- Pin indexed to prevent interchangeability of gas services
- Cleaned for medical gas service
- Less than 3 psi (21 kPa) pressure drop through the outlet at 120 L/min and 50 psig (345 kPa) inlet pressure
- Inlet pipe can be rotated 360 degrees for ease of installation
- Gas specific back bodies can accept either Quick Connect or DISS front identification bodies
- Outlets can be adjusted up to 1 1/4" (32 mm) wall thickness.
- Adapters are available from Ohio Medical LLC

SPECIFICATIONS

The medical gas wall outlet shall be Ohio Medical Healthcair® Series. The outlets shall be UL Listed, NFPA compliant, cleaned for medical gas service and be pressure tested. Each outlet shall have less than 3 psi (21kPa) pressure drop through the outlet @ 120 l/min. and 50 psig (345 kPa) inlet pressure. For outlets providing positive pressure gas, the outlet shall be equipped with a primary and secondary check valve, the secondary check valve shall be rated for 200 psi (1,379 kPa) allowing the primary check valve to be removed for service without isolating the entire zone.

The wall outlets shall have a gas specific back body with steel mounting plate, which allows outlets to be ganged together with a center line spacing of 5" (127 mm). Each back body shall be equipped with a 6-1/2" (165 mm) length type "K" copper pipe stub which is brazed to the outlet body. The outside diameter of the copper pipe stub shall be 1/2" (12.7mm). The inlet pipe can be swiveled 360 degrees for ease of installation.

Outlet bodies shall be gas specific by means of a gas specific indexing pin arrangement. The indexing pins shall be arranged in such a way as to connect the latch-valve assembly only with the specific matching gas back body, preventing interchangeability of gas services.

The latch-valve assembly, which by means of color coding and wording, shall identify the specific medical gas service provided by the outlet and shall accept gas specific adapters.

For aesthetic appeal each outlet shall include a one piece ivory trim plate. The trim plate shall be constructed of high impact, flame retardant Cycoloy®.

The wall/ceiling outlet can accommodate various finished wall thicknesses from 3/8" (10 mm) to 1-1/4" (32 mm). Ohio Medical LLC is an ISO 13485 registered facility.

Ohio Diamond Compatible Wall Outlet

Chemetron Compatible Wall Outlet

Puritan-Bennett Compatible Wall Outlet

DISS Wall/Ceiling Outlet

*Rebuild Kits Available

Chemetron® is a registered trademark of Allied Healthcare Products, Inc.
Hill-Rom® is a registered trademark of Hillenbrand Industries

MGO-1

ATTACHMENT #3

Diamond Compatible Shown

Rough-in assemblies to be mounted to a wall, piping can not support the weight of outlet assembly.

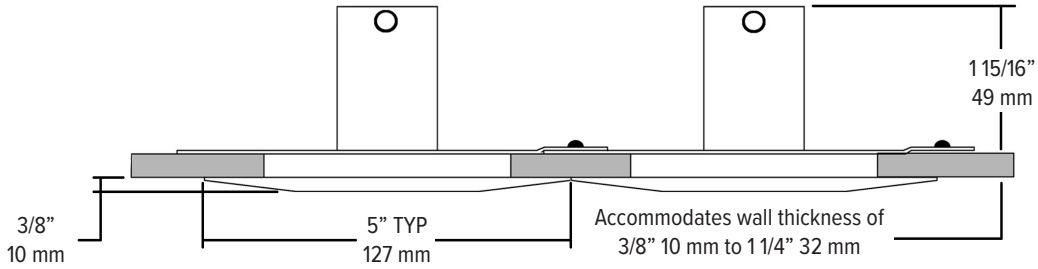

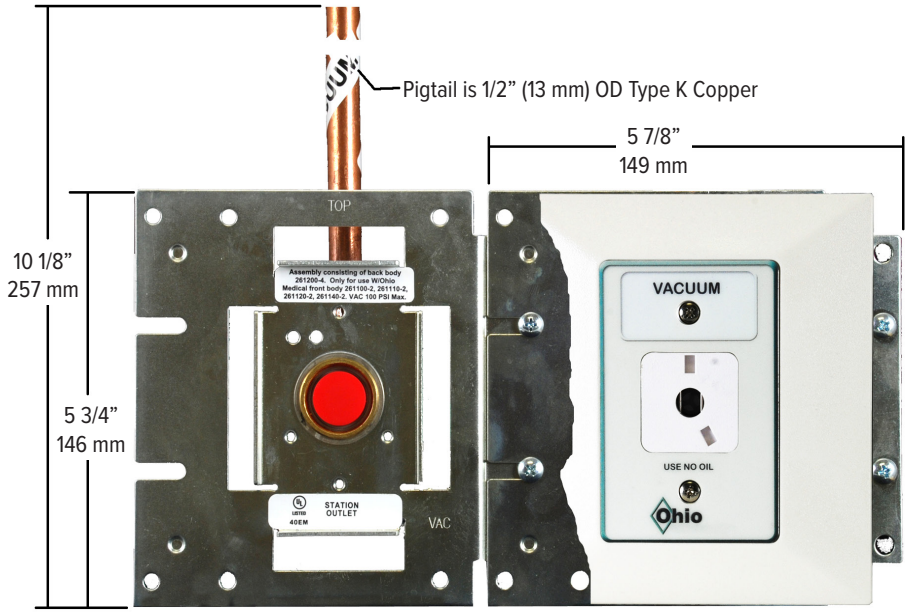

	WALL COMPATIBLE				CEILING COMPATIBLE
	Diamond	**Chemetron**	**Puritan-Bennett**	**DISS**	**DISS**
Oxygen	261010-1-X	261020-1	261040-1	261000-1	261000-3
Vacuum	261010-5-X	261020-5	261040-5	261000-5	261000-7
Air	261010-13-X	261020-13	N/A	261000-13	261000-15
Nitrous Oxide	261010-9-X	261020-9	261040-9	261000-9	261000-11
WAGD	261010-17-X	261020-17	261040-13	261000-21	261000-23
Nitrogen	N/A	N/A	261040-17	261000-17	261000-19
Carbon Dioxide	N/A	N/A	N/A	261000-25	261000-27
Instrument Air	N/A	N/A	N/A	261000-29	261000-31
Slide	261690-X	261690	N/A	261690	N/A

For ISO/CSA: add “-ISO” to the end of the part number. **For Spanish Language:** add “-SPN” to the end of the part number
Example: 261000-1-ISO or 261000-1-SPN

© 2019 Ohio Medical LLC. This document contains information that is proprietary and confidential to Ohio Medical LLC. Use of this information is under license from Ohio Medical LLC. Any use other than that authorized by Ohio Medical LLC is prohibited. Ohio Medical LLC, Ohio Medical and the Ohio Medical LLC logo are registered trademarks of Ohio Medical LLC. Chemetron is a registered trademark of Allied Healthcare Products, Inc., Puritan Bennett is a registered trademark of Nellcor Puritan Bennett LLC. UL and the UL logo are registered trademarks of UL LLC Limited Liability Company. NFPA is a registered trademark of National Fire Protection Association, Inc.

Ohio Medical LLC
1111 Lakeside Drive, Gurnee, IL 60031 USA
866.549.6446 | ohiomedical.com

255431 (Rev. 6) 06/19