## GENERAL NOTES

1. BOLD INDICATES EQUIPMENT TO BE INSTALLED.

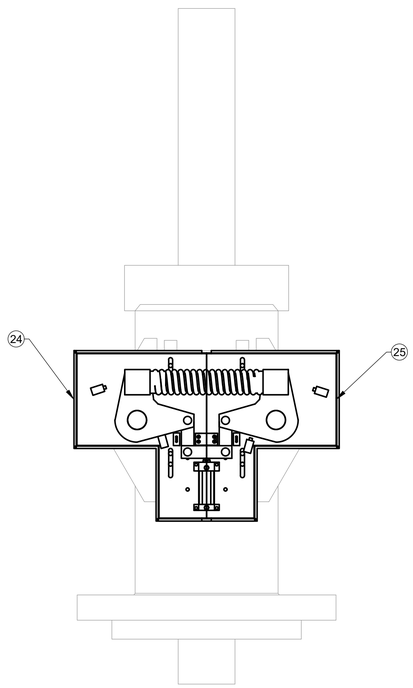


PLAN VIEW

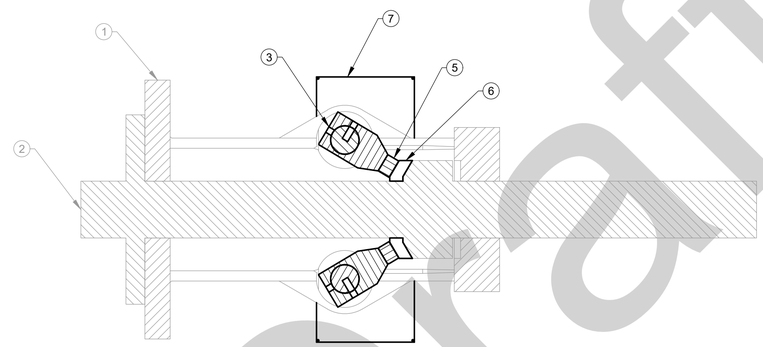


SECTION VIEW

A7 / M-101 — F7 SECTION
SCALE: 1" = 1'-0"

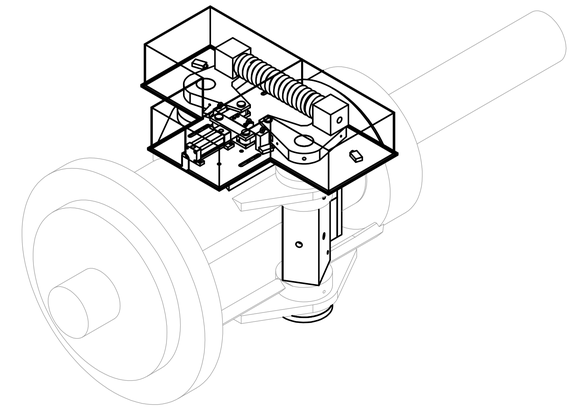

ISOMETRIC VIEW

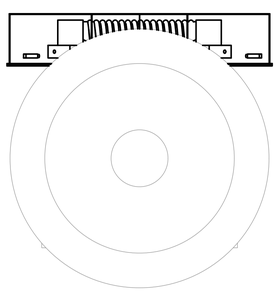

FRONT VIEW

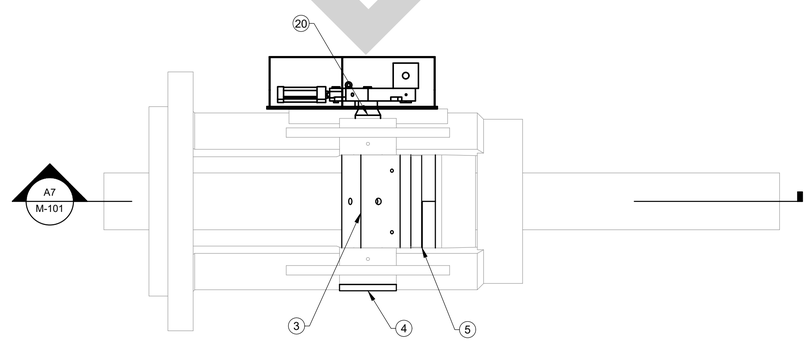


SIDE VIEW

A7 — WICKET GATE LOCK ASSEMBLY
SCALE: 1" = 1'-0"

0 3" 6" 1'

Draft

US Army Corps of Engineers®

| MARK | DESCRIPTION | DATE |
|---|---|---|

U.S. ARMY CORPS OF ENGINEERS
WALLA WALLA DISTRICT
201 N 3RD AVE
WALLA WALLA, WASHINGTON

DESIGNED BY: K. SAUTTER
DRAWN BY: M. THOMPSON
CHECKED BY:
ISSUE DATE:
SOLICITATION NO.:
CONTRACT NO.:

US ARMY CORPS OF ENGINEERS
HYDROELECTRIC DESIGN CENTER
333 SW 1ST AVE
PORTLAND, OREGON

SUBMITTED BY: JORDAN S. FINK, P.E.
SIZE: ANSI D
FILE NAME: M-101.dwg
FILE NUMBER:

LITTLE GOOSE DAM
SNAKE RIVER
POWERHOUSE
REWORKED WICKET GATE SERVO LOCK REPLACEMENT

WICKET GATE LOCK ASSEMBLY

SHEET ID
M-101

FINAL REVIEW

M-101.dwg
%PRODUCTION DATA 4%
%PRODUCTION DATA 3%
%PRODUCTION DATA 2%

## GENERAL NOTES

1. BOLD OR BLACK INDICATES NEW EQUIPMENT.

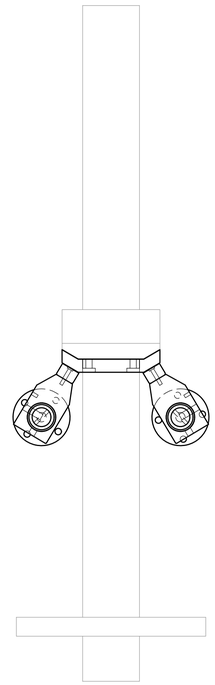

PLAN VIEW

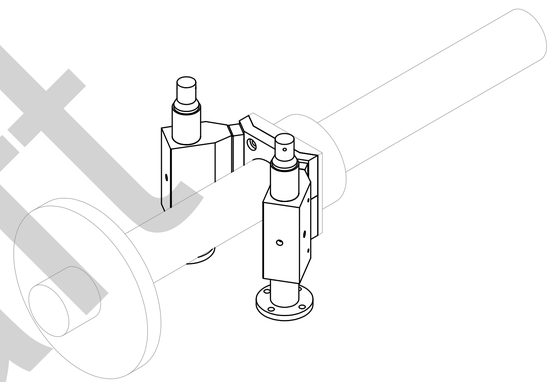

ISOMETRIC VIEW

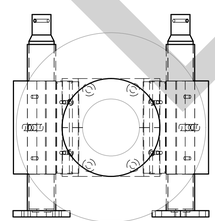

FRONT VIEW

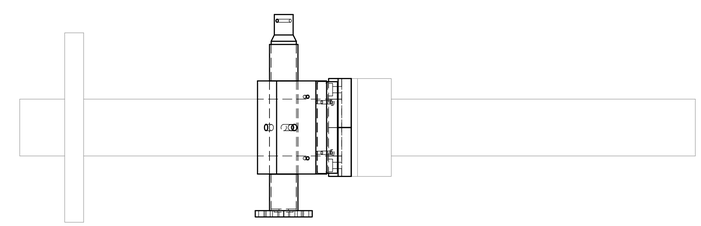

SIDE VIEW

Draft

A2 WICKET GATE LOCK

SCALE: 1" = 1'-0"

0 6" 1' 2'

US Army Corps of Engineers®

| MARK | DESCRIPTION | DATE |
|---|---|---|

U.S. ARMY CORPS OF ENGINEERS
WALLA WALLA DISTRICT
201 N 3RD AVE
WALLA WALLA, WASHINGTON

US ARMY CORPS OF ENGINEERS
HYDROELECTRIC DESIGN CENTER
333 SW 1ST AVE
PORTLAND, OREGON

DESIGNED BY: K. SAUTTER
DRAWN BY: M. THOMPSON
CHECKED BY:
SUBMITTED BY: JORDAN S. FINK, P.E.
SIZE: ANSI D
FILE NAME: M-102.dwg
ISSUE DATE:
SOLICITATION NO.:
CONTRACT NO.:
FILE NUMBER:

LITTLE GOOSE DAM
SNAKE RIVER
POWERHOUSE
REWORKED WICKET GATE SERVO LOCK REPLACEMENT

WICKET GATE LOCK ASSEMBLY
MINUS

SHEET ID
M-102

FINAL REVIEW

M-102.dwg
%PRODUCTION DATA 4%
%PRODUCTION DATA 3%
%PRODUCTION DATA 2%

## GENERAL NOTES

1. ENTIRE DRAWING CONSISTS OF NEW EQUIPMENT.

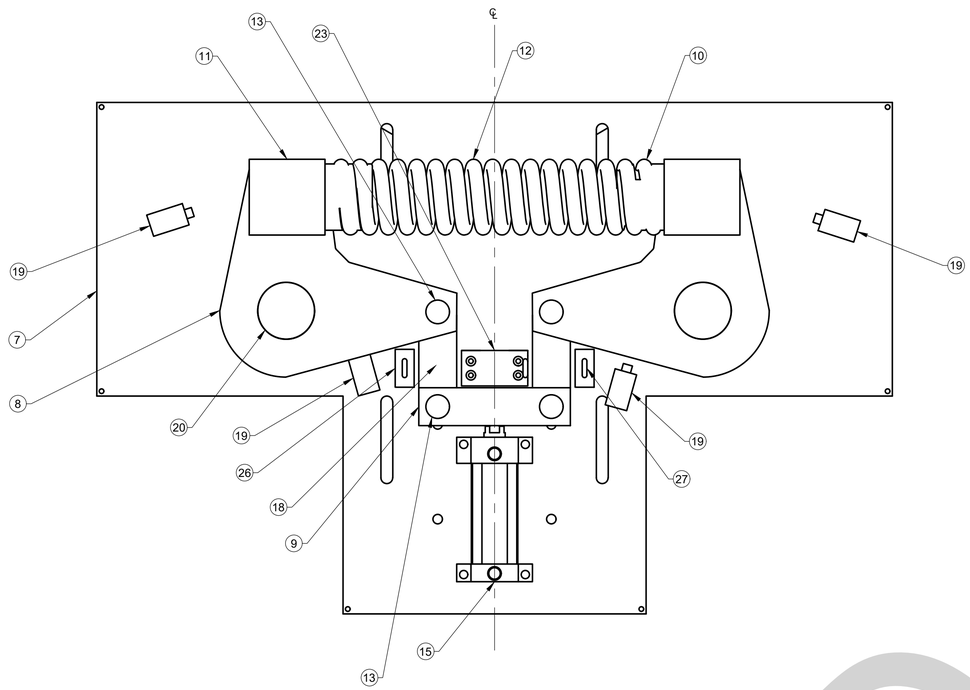


PLAN VIEW

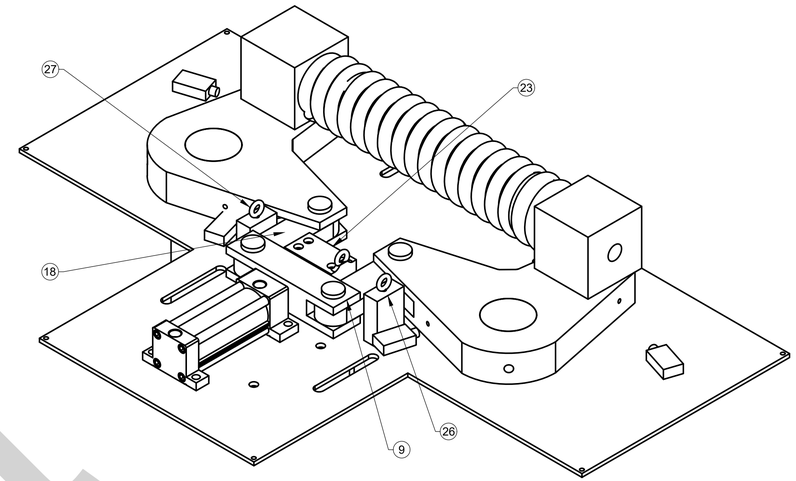


ISOMETRIC VIEW

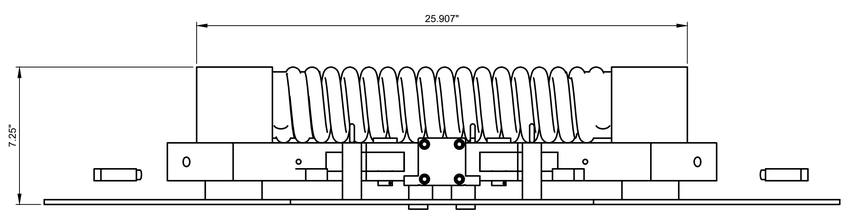


FRONT VIEW

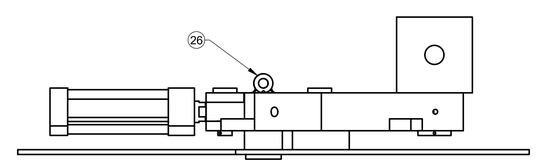


SIDE VIEW

### PARTS LIST

| ITEM | QTY | PART NUMBER | MATERIAL |
|---|---|---|---|
| 1 | 1 | EXISTING WICKET GATE LOCK HOUSING | STEEL, CARBON |
| 2 | 1 | SERVOMOTOR SHAFT | STEEL, CARBON |
| 3 | 2 | LATCH ARM | 4140 STEEL |
| 4 | 2 | PIN BOTTOM PLATE | A36 STEEL |
| 5 | 2 | LATCH ARM TIP | 4140 STEEL |
| 6 | 2 | STOP PLATE EXTENSION | STEEL, CARBON |
| 7 | 1 | ACTUATION BOX BASEPLATE | A36 STEEL |
| 8 | 2 | ACTUATION ARM | A36 STEEL |
| 9 | 1 | CENTER LINK | A36 STEEL |
| 10 | 2 | SPRING MOUNT LINK | A36 STEEL |
| 11 | 2 | SPRING MOUNT | A36 STEEL |
| 12 | 1 | SPRING | STEEL, CARBON |
| 13 | 2 | ACTUATION PIN | A36 STEEL |
| 14 | 2 | SHIM | 4140 STEEL |
| 15 | 1 | HYDRAULIC CYLINDER | |
| 16 | 4 | ACTUATION PIN BUSHING | BRONZE |
| 17 | 2 | SPRING MOUNT BUSHING | BRONZE |
| 18 | 2 | ACTUATION LINK | A36 STEEL |
| 19 | 4 | LIMIT SWITCH | |
| 20 | 1 | LEFT LATCH PIN | HEAT TREATED 4340 STEEL |
| 21 | 1 | RIGHT LATCH PIN | HEAT TREATED 4340 STEEL |
| 22 | 4 | LATCH PIN BUSHING | FIBER REINFORCED PTFE COMPOSITE |
| 23 | 1 | LOCK ASSEMBLY | A36 STEEL |
| 24 | 1 | ACTUATION BOX COVER RIGHT | A36 STEEL |
| 25 | 1 | ACTUATION BOX COVER LEFT | A36 STEEL |
| 26 | 2 | LOCK ANCHOR | STEEL, ALLOY |
| 27 | 2 | EYE BOLT | STEEL |
| 28 | 2 | LOCK PLATE | A36 STEEL |

A1 ACTUATION BOX ASSEMBLY

SCALE: 3" = 1'-0"

0 3" 6" 1'

Draft

US Army Corps of Engineers®

| MARK | DESCRIPTION | DATE |
|---|---|---|

DESIGNED BY: K. SAUTTER
DRAWN BY: M. THOMPSON
CHECKED BY:
SUBMITTED BY: JORDAN S. FINK, P.E.
SIZE: ANSI D
FILENAME: M-103.dwg
ISSUE DATE:
SOLICITATION NO.:
CONTRACT NO.:
FILE NUMBER:

U.S. ARMY CORPS OF ENGINEERS
WALLA WALLA DISTRICT
201 N 3RD AVE
WALLA WALLA, WASHINGTON

US ARMY CORPS OF ENGINEERS
HYDROELECTRIC DESIGN CENTER
333 SW 1ST AVE
PORTLAND, OREGON

LITTLE GOOSE DAM
SNAKE RIVER
POWERHOUSE
REWORKED WICKET GATE SERVO LOCK REPLACEMENT

ACTUATION BOX ASSEMBLY

SHEET ID

M-103

FINAL REVIEW

M-103.dwg
%PRODUCTION DATA 4%
%PRODUCTION DATA 3%
%PRODUCTION DATA 2%

## GENERAL NOTES

1. ALL PARTS ON THIS SHEET ARE NEW.

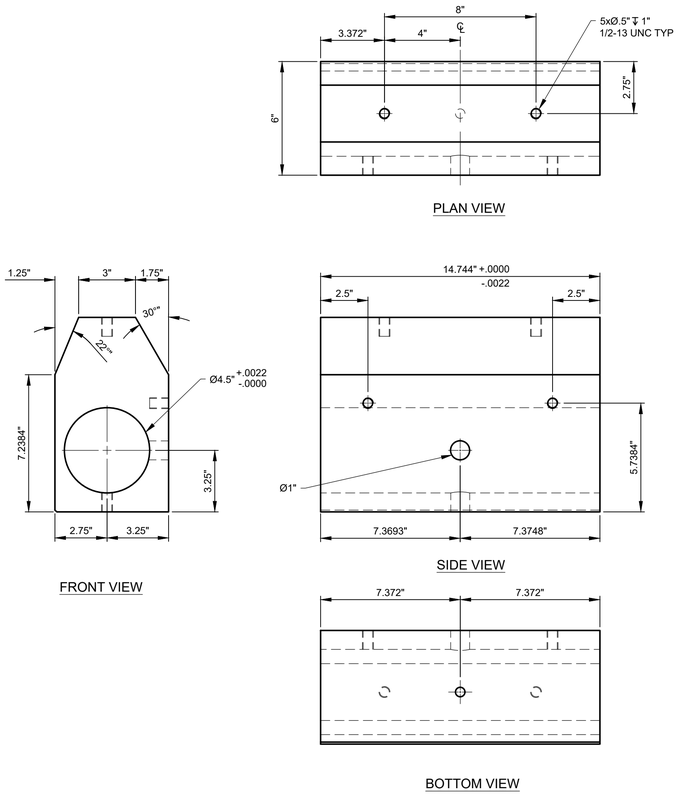


G2 #3 LATCH ARM
SCALE: 3" = 1'-0" 2 REQUIRED

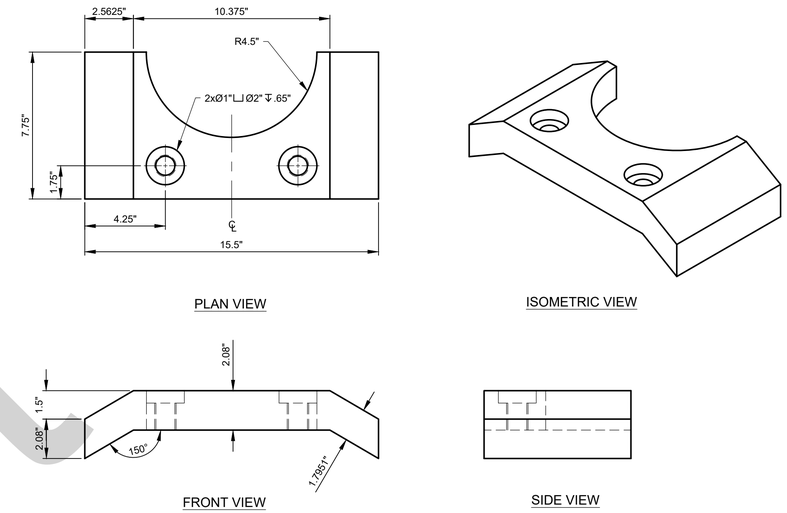


H14 #6 STOP PLATE EXTENSION
SCALE: 3" = 1'-0" 2 REQUIRED

0 3" 6" 1'

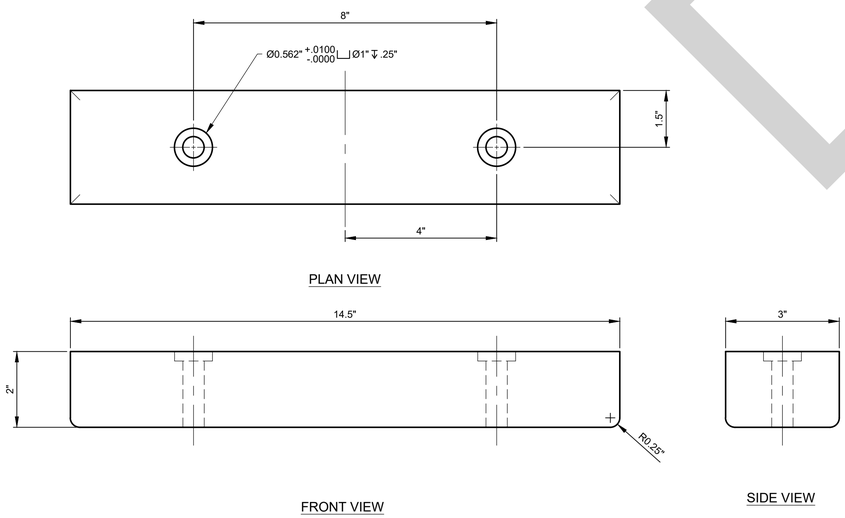


A2 #5 LATCH ARM TIP
SCALE: 6" = 1'-0" 2 REQUIRED

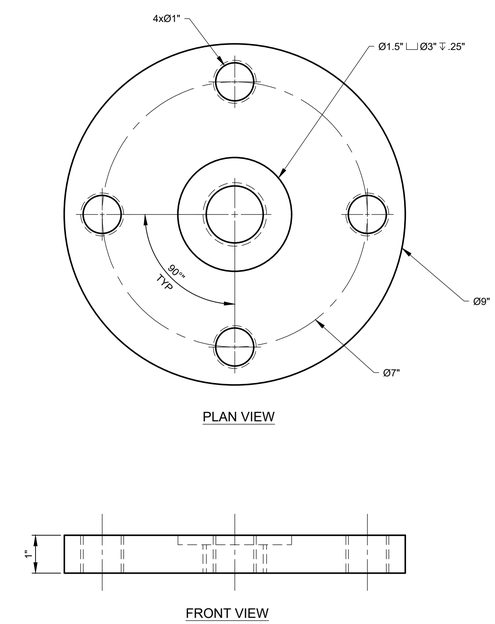


A14 #4 PIN BOTTOM PLATE
SCALE: 6" = 1'-0" 2 REQUIRED

0 1-1/2" 3" 6"

Draft

US Army Corps of Engineers®

| MARK | DESCRIPTION | DATE |
|---|---|---|

DESIGNED BY: K. SAUTTER
DRAWN BY: M. THOMPSON
CHECKED BY:
SUBMITTED BY: JORDAN S. FINKE, P.E.
SIZE: ANSI D
FILENAME: M-501.dwg
ISSUE DATE:
SOLICITATION NO.:
CONTRACT NO.:
FILE NUMBER:

U.S. ARMY CORPS OF ENGINEERS
WALLA WALLA DISTRICT
201 N 3RD AVE
WALLA WALLA, WASHINGTON

US ARMY CORPS OF ENGINEERS
HYDROELECTRIC DESIGN CENTER
333 SW 1ST AVE
PORTLAND, OREGON

LITTLE GOOSE DAM
SNAKE RIVER
POWERHOUSE
REWORKED WICKET GATE SERVO LOCK REPLACEMENT

MECHANICAL PARTS
SHEET 1

SHEET ID
M-501

M-501.dwg
%PRODUCTION DATA 4%
%PRODUCTION DATA 3%
%PRODUCTION DATA 2%
FINAL REVIEW

## GENERAL NOTES

1. ALL PARTS ON THIS SHEET ARE NEW.
2. CENTER THREADED HOLE TO MATCH HYDRAULIC CYLINDER INTERFACE.

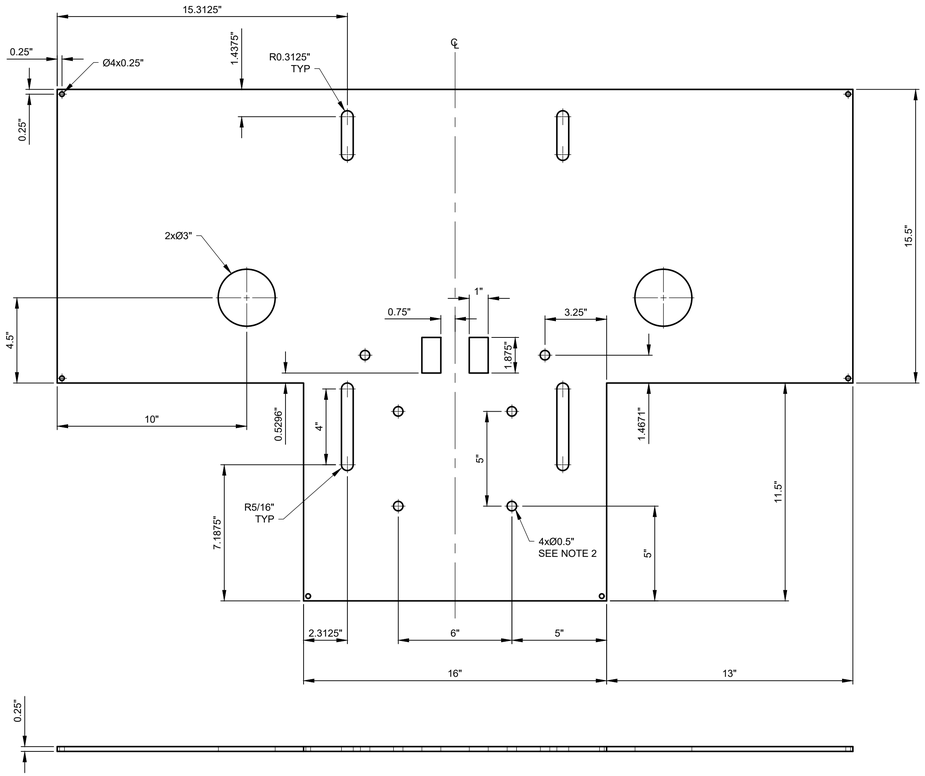


G2 #7 PLAN VIEW ACTUATION BOX BASEPLATE

SCALE: 3" = 1'-0" ONE REQUIRED

0 3" 6" 1'

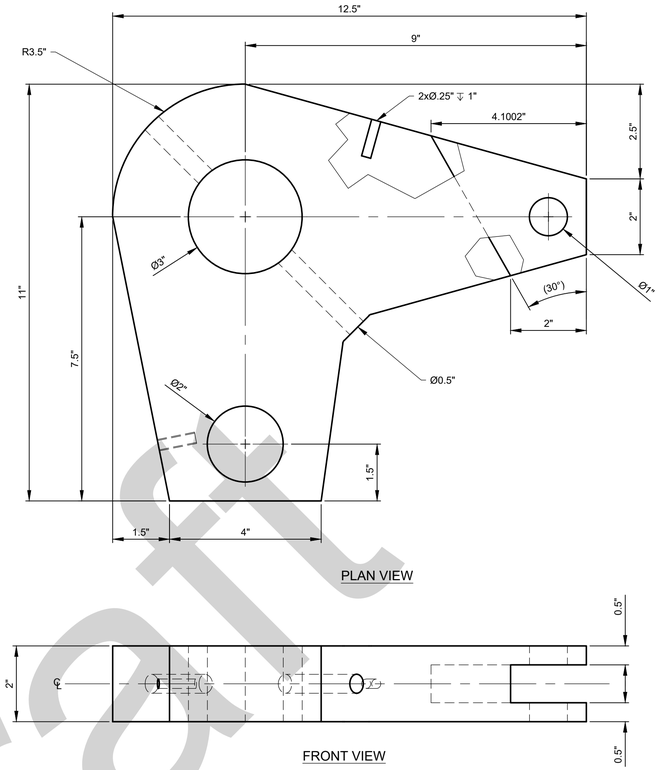


G10 #8 ACTUATION ARM

SCALE: 6" = 1'-0" TWO REQUIRED

0 1-1/2" 3" 6"

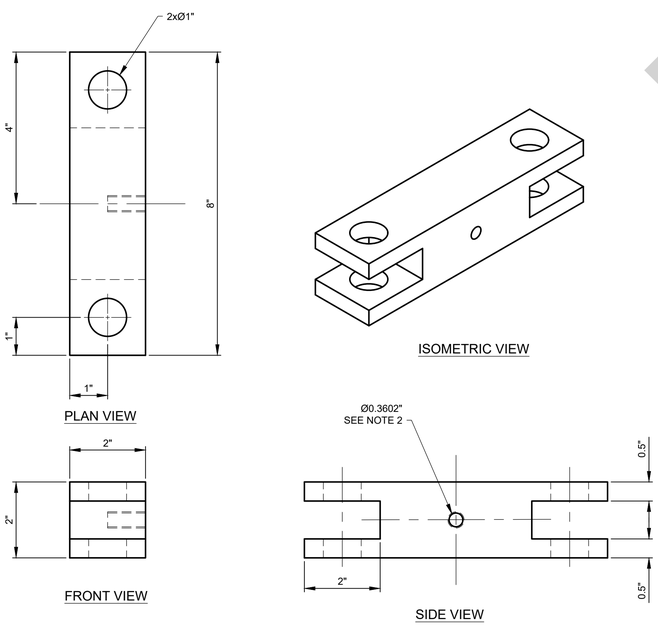


A2 #9 CENTER LINK

SCALE: 6" = 1'-0" ONE REQUIRED

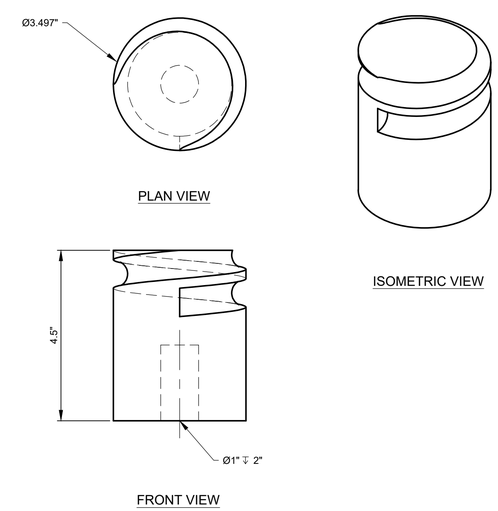


A13 #10 SPRING MOUNT LINK

SCALE: 6" = 1'-0"

Draft

US Army Corps of Engineers®

| MARK | DESCRIPTION | DATE |
|---|---|---|

DESIGNED BY: K. SAUTTER
DRAWN BY: M. THOMPSON
CHECKED BY:
ISSUE DATE:
SOLICITATION NO.:
CONTRACT NO.:
FILE NUMBER:
SUBMITTED BY: JORDAN S. FINK, P.E.
SIZE: ANSI D
FILENAME: M-502.dwg

U.S. ARMY CORPS OF ENGINEERS
WALLA WALLA DISTRICT
201 N 3RD AVE
WALLA WALLA, WASHINGTON

US ARMY CORPS OF ENGINEERS
HYDROELECTRIC DESIGN CENTER
333 SW 1ST AVE
PORTLAND, OREGON

LITTLE GOOSE DAM
SNAKE RIVER
POWERHOUSE
REWORKED WICKET GATE SERVO LOCK REPLACEMENT

MECHANICAL PARTS
SHEET 2

SHEET ID
M-502

FINAL REVIEW

M-502.dwg
%PRODUCTION DATA 4%
%PRODUCTION DATA 3%
%PRODUCTION DATA 2%

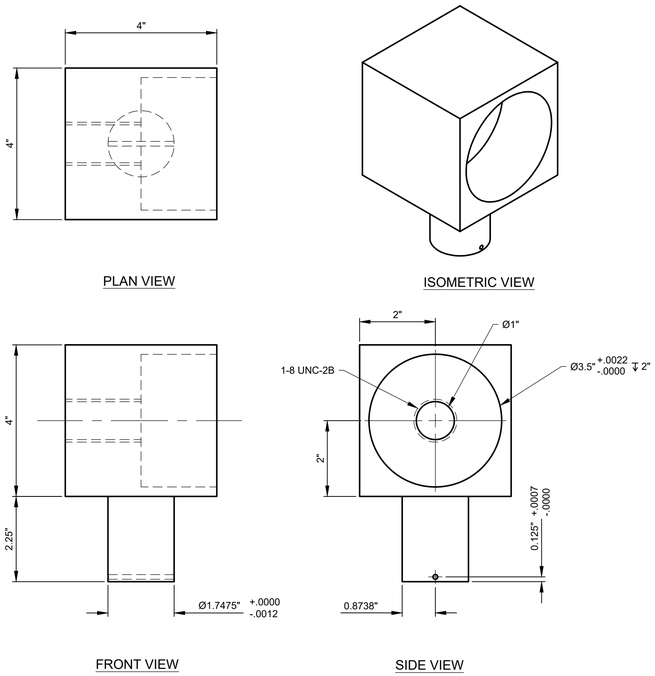


H2 #11 SPRING MOUNT
SCALE: 6" = 1'-0" TWO REQUIRED
0 1-1/2" 3" 6"

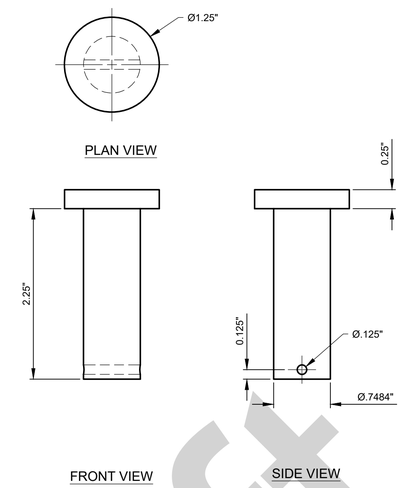


J10 #13 ACTUATION PIN
SCALE: FULL FOUR REQUIRED
0 1/2" 1" 2"

## GENERAL NOTES

1. ALL PARTS ON THIS SHEET ARE NEW.

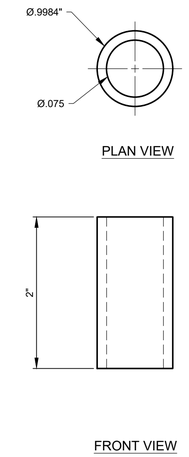


J16 #16 ACTUATION PIN BUSHING
SCALE: FULL FOUR REQUIRED

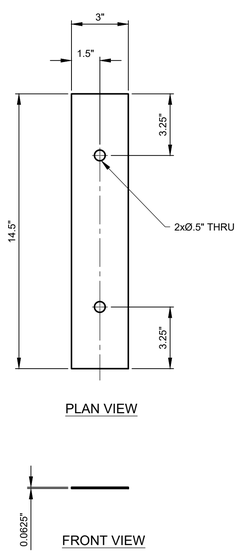


A2 #14 SHIM
SCALE: 3" = 1'-0"
TWO REQUIRED
0 3" 6" 1'

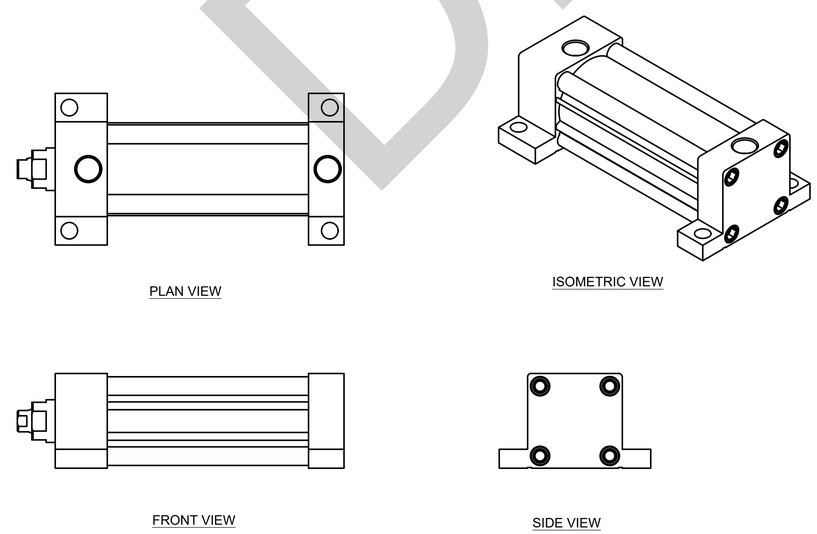


A6 #15 HYDRAULIC CYLINDER
SCALE: 6" = 1'-0" ONE REQUIRED

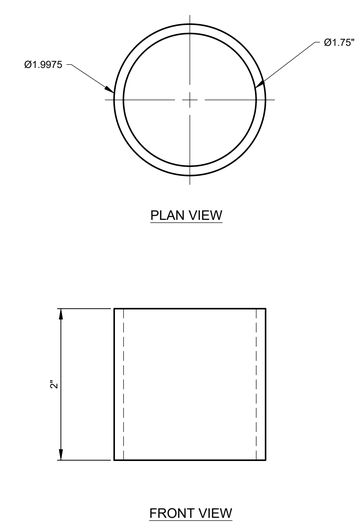


A16 #17 SPRING MOUNT BUSHING
SCALE: FULL TWO REQUIRED

Draft

US Army Corps of Engineers®

| MARK | DESCRIPTION | DATE |
|---|---|---|

DESIGNED BY: K. SAUTTER
DRAWN BY: M. THOMPSON
CHECKED BY:
SUBMITTED BY: JORDAN S. FINK, P.E.
SIZE: ANSI D
FILENAME: M-503.dwg
ISSUE DATE:
SOLICITATION NO.:
CONTRACT NO.:
FILE NUMBER:

U.S. ARMY CORPS OF ENGINEERS
WALLA WALLA DISTRICT
201 N 3RD AVE
WALLA WALLA, WASHINGTON

US ARMY CORPS OF ENGINEERS
HYDROELECTRIC DESIGN CENTER
333 SW 1ST AVE
PORTLAND, OREGON

LITTLE GOOSE DAM
SNAKE RIVER
POWERHOUSE
REWORKED WICKET GATE SERVO LOCK REPLACEMENT

MECHANICAL PARTS
SHEET 3

SHEET ID
M-503

FINAL REVIEW

M-503.dwg
%PRODUCTION DATA 4%
%PRODUCTION DATA 3%
%PRODUCTION DATA 2%

## GENERAL NOTES

1. ALL PARTS ON THIS SHEET ARE NEW.

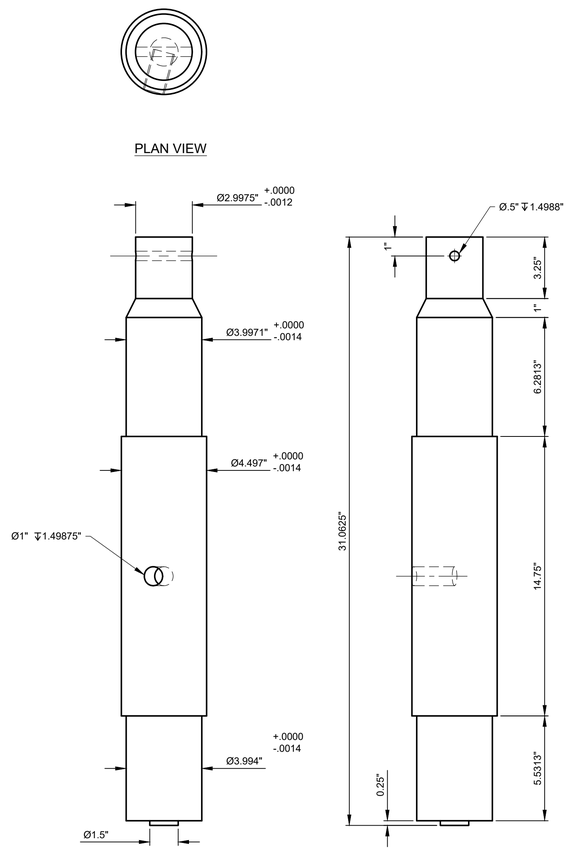


E2 #20 LATCH PIN

SCALE: 3" = 1'-0" TWO REQUIRED - ONE AS SHOWN, ONE OPPOSITE HAND

0 3" 6" 1'

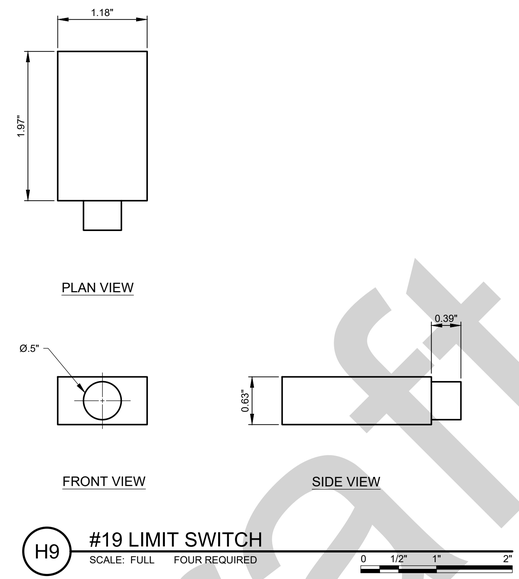


H9 #19 LIMIT SWITCH

SCALE: FULL FOUR REQUIRED

0 1/2" 1" 2"

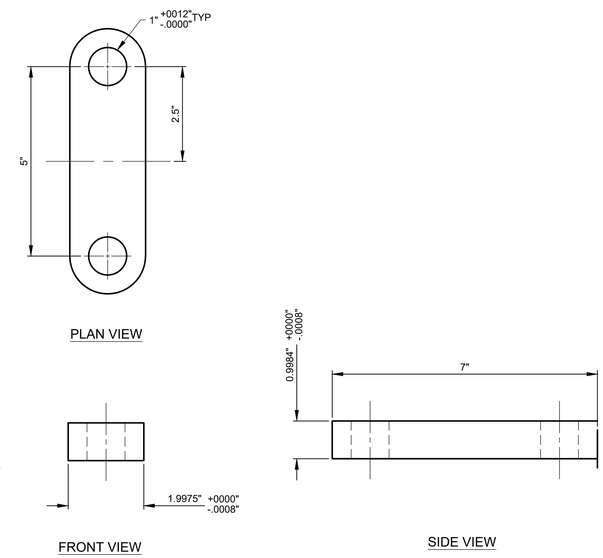


H14 #18 ACTUATION LINK

SCALE: 6"=1'-0" TWO REQUIRED

0 1-1/2" 3" 6"

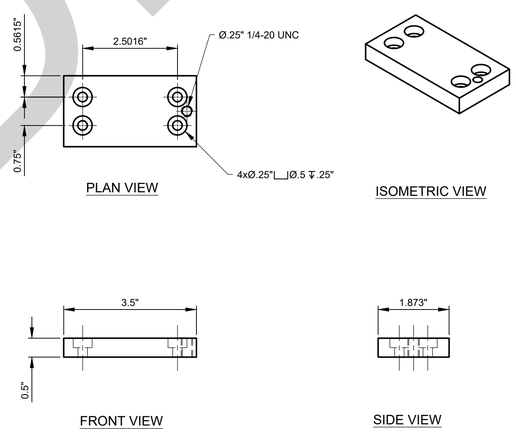


B10 #23 LOCKOUT ASSEMBLY

SCALE: 6"=1'-0" ONE REQUIRED

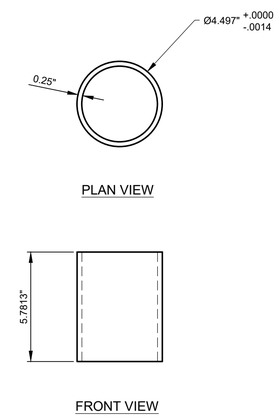


B17 #22 LATCH PIN BUSHING

SCALE: 3"=1'-0" TWO REQUIRED

Draft

US Army Corps of Engineers®

| MARK | DESCRIPTION | DATE |
|---|---|---|

ISSUE DATE:
SOLICITATION NO.:
CONTRACT NO.:
FILE NUMBER:

DESIGNED BY: K. SAUTTER
DRAWN BY: M. THOMPSON
CHECKED BY:
SUBMITTED BY: JORDAN S. FINK, P.E.
SIZE: ANSI D FILENAME: M-504.dwg

U.S. ARMY CORPS OF ENGINEERS
WALLA WALLA DISTRICT
201 N 3RD AVE
WALLA WALLA, WASHINGTON

US ARMY CORPS OF ENGINEERS
HYDROELECTRIC DESIGN CENTER
333 SW 1ST AVE
PORTLAND, OREGON

LITTLE GOOSE DAM
SNAKE RIVER
POWERHOUSE
REWORKED WICKET GATE SERVO LOCK REPLACEMENT

MECHANICAL PARTS
SHEET 4

SHEET ID
M-504

FINAL REVIEW

M-504.dwg
%PRODUCTION DATA 4%
%PRODUCTION DATA 3%
%PRODUCTION DATA 2%

## GENERAL NOTES

1. ALL PARTS ON THIS SHEET ARE NEW.
2. ACTUATION BOX COVER MADE OF 12 GAUGE SHEET METAL.

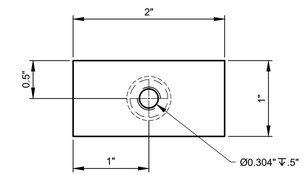


PLAN VIEW

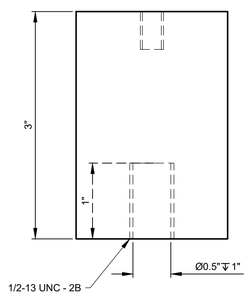


FRONT VIEW

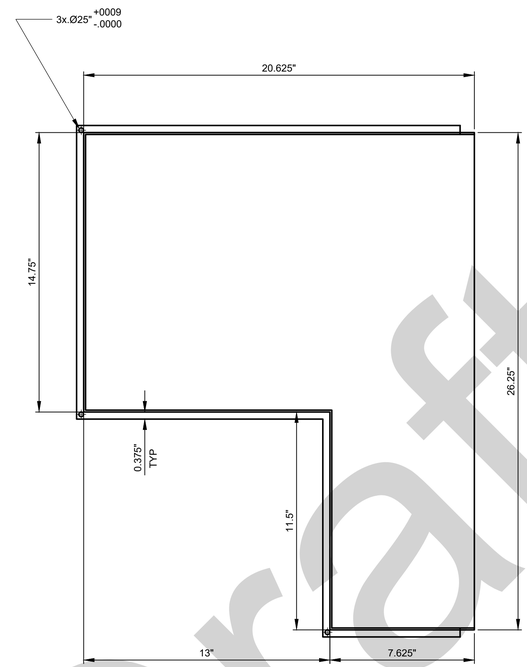


PLAN VIEW

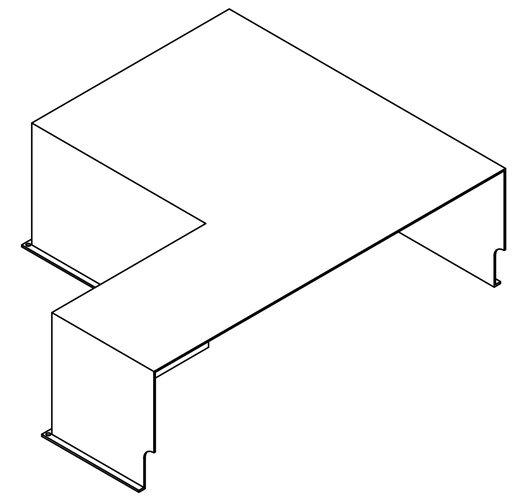

ISOMETRIC VIEW

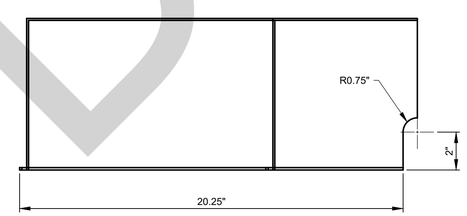


FRONT VIEW

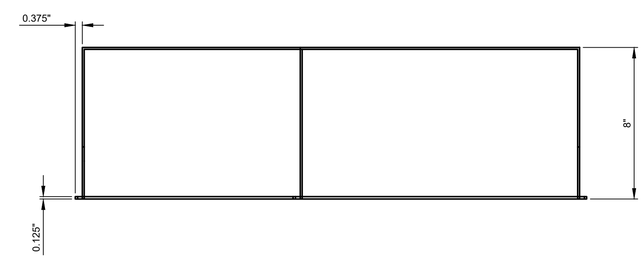


SIDE VIEW

C8 #5 ACTUATION BOX COVER

SCALE: 3" = 1'-0" TWO REQUIRED - ONE AS SHOWN, ONE OPPOSITE HAND

0 3" 6" 1'

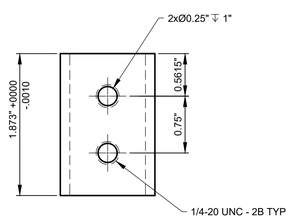


PLAN VIEW

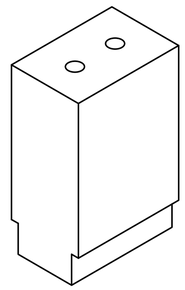

ISOMETRIC VIEW

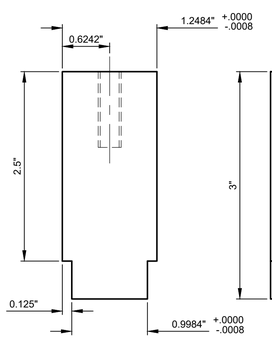


FRONT VIEW

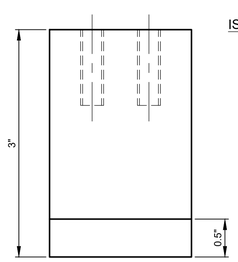


SIDE VIEW

A1 #28 LOCK PLATE

SCALE: FULL TWO REQUIRED

Draft

US Army Corps of Engineers®

| MARK | DESCRIPTION | DATE |
|---|---|---|

DESIGNED BY: K. SAUTTER
DRAWN BY: M. THOMPSON
CHECKED BY:
ISSUE DATE:
SOLICITATION NO.:
CONTRACT NO.:
FILE NUMBER:
SUBMITTED BY: JORDAN S. FINNEY, P.E.
SIZE: ANSI D
FILE NAME: M-505.dwg

U.S. ARMY CORPS OF ENGINEERS
WALLA WALLA DISTRICT
201 N 3RD AVE
WALLA WALLA, WASHINGTON

US ARMY CORPS OF ENGINEERS
HYDROELECTRIC DESIGN CENTER
333 SW 1ST AVE
PORTLAND, OREGON

LITTLE GOOSE DAM
SNAKE RIVER
POWERHOUSE
REWORKED WICKET GATE SERVO LOCK REPLACEMENT

MECHANICAL PARTS
SHEET 5

SHEET ID
M-505

FINAL REVIEW

M-505.dwg
%PRODUCTION DATA 4%
%PRODUCTION DATA 3%
%PRODUCTION DATA 2%