CONSTRUCT NEW PARKING LOT 3, B1000
OFFUTT AIR FORCE BASE, NEBRASKA
PROJECT NO. SGBP 24-0018

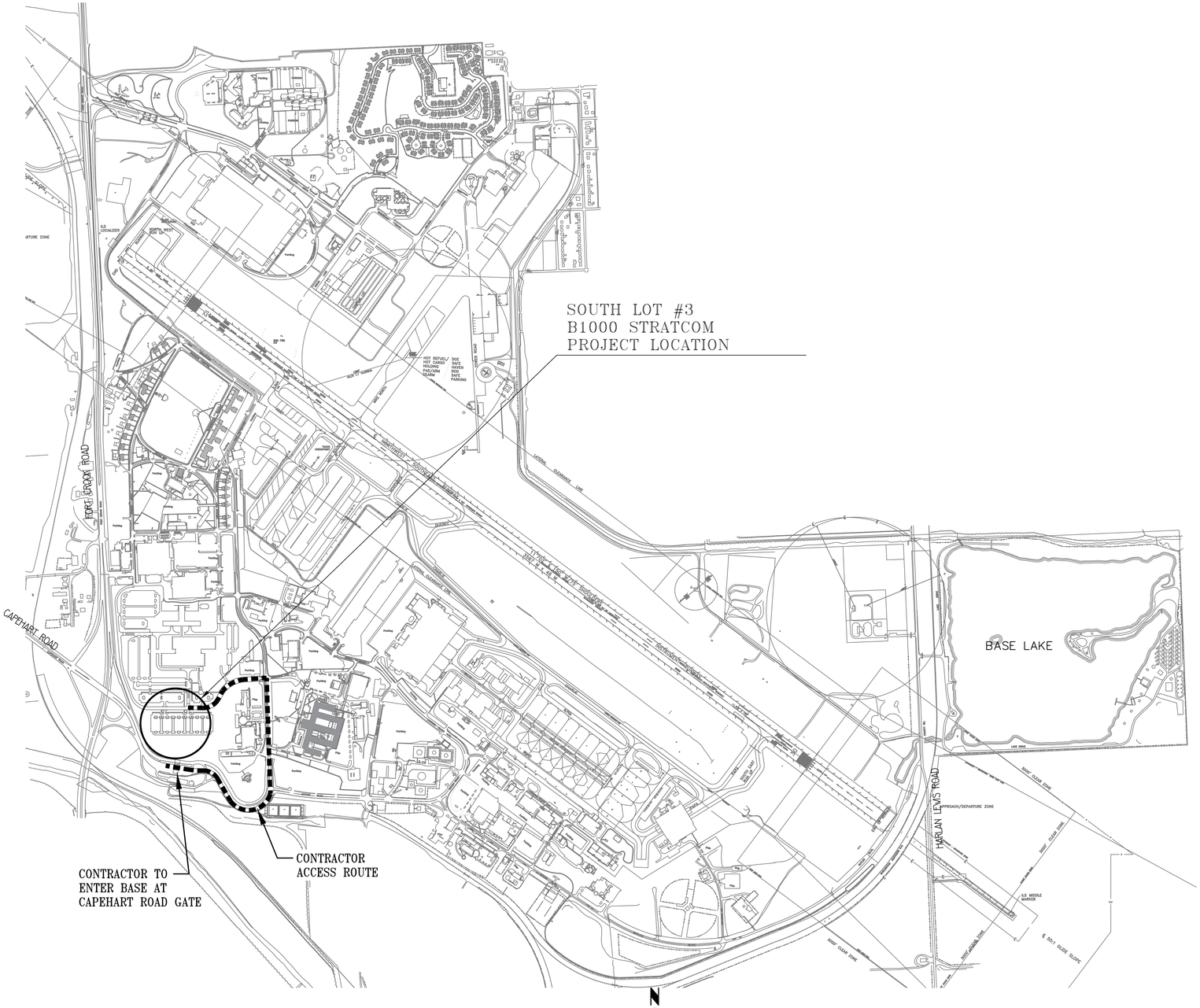

LOCATION MAP

INDEX OF SHEETS

SHEET NO.	SHEET TITLE
1	COVER SHEET & LOCATION PLAN
2	C0.1 – CONTRACTOR ACCESS & STAGING PLAN
3	C0.2 – TOPOGRAPHIC SURVEY
4	C1.1 – REMOVAL PLAN – BASE BID
5	C1.2 – SITE PLAN – BASE BID
6	C1.3 – ENLARGED SITE PLAN AREA B – BASE BID
7	C1.4 – ENLARGED SITE PLAN AREA C – BASE BID
8	C1.5 – GRADING PLAN AREA B – BASE BID
9	C1.6 – GRADING PLAN AREA C – BASE BID
10	C1.7 – DRAINAGE PLAN – BASE BID
11	C1.8 – EROSION CONTROL PLAN – BASE BID
12	C1.9 – PERMANENT STABILIZATION PLAN – BASE BID
13	C2.1 – REMOVAL PLAN – ALTERNATIVE
14	C2.2 – SITE PLAN – ALTERNATIVE
15	C2.3 – ENLARGED SITE PLAN AREA A – ALTERNATIVE
16	C2.4 – ENLARGED SITE PLAN AREA B – ALTERNATIVE
17	C2.5 – ENLARGED SITE PLAN AREA C – ALTERNATIVE
18	C2.6 – GRADING PLAN AREA A – ALTERNATIVE
19	C2.7 – GRADING PLAN AREA B – ALTERNATIVE
20	C2.8 – GRADING PLAN AREA C – ALTERNATIVE
21	C2.9 – DRAINAGE PLAN – ALTERNATIVE
22	C2.10 – EROSION CONTROL PLAN – ALTERNATIVE
23	C2.11 – PERMANENT STABILIZATION PLAN – ALTERNATIVE
24	C3.1 – PAVEMENT DETAILS
25	C3.2 – STORM DRAINAGE DETAILS
26	C3.3 – CURB INLET DETAILS
27	C3.4 – CURB INLET DETAILS
28	C3.5 – AREA INLET DETAILS
29	ED1.01 – SITE – ELECTRICAL DEMOLITION
30	E1.01 – SITE PLAN – BASE BID ELECTRICAL
31	E1.02 – SITE PLAN – ALTERNATE ELECTRICAL
32	E1.03 – SITE PLAN – PHOTOMETRICS

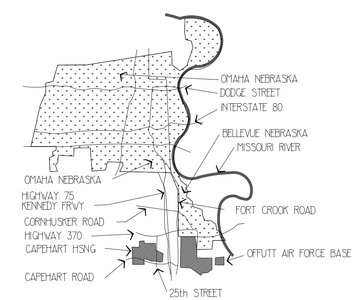

VICINITY MAP

Offutt
Air Force Base

APPROVED

SIGNATURE	OFFICE
BASE CIVIL ENGINEER	
CHIEF OF ENGINEERING	
CHIEF OF DESIGN	
PROJECT MANAGER	

COORDINATION

FIRE DEPARTMENT	
SAFTY	
FORCE PROTECTION	
ENVIRONMENTAL (CEA)	
COMMUNICATION	
USING AGENCY	

"SIGNING OF THE COVER SHEET CONSTITUTES COORDINATION OF ALL DRAWINGS IN THIS PROJECT; SUBSEQUENT SHEETS NEED NOT BE SIGNED."

DESIGN FIRM

hgm ASSOCIATES INC.
ENGINEERING ARCHITECTURE SURVEYING
council bluffs omaha

PROFESSIONAL ENGINEER
WILLIAM J. GLISMANN
E-6947
STATE OF NEBRASKA

6-09-26
HGM COA NE CA-0065

Designer	Project Manager
SJE	WJG
Drafter: SJE	Date: 6-09-26

REVISION	BY/DATE

SHEET TITLE
COVER SHEET & LOCATION PLAN

SHEET 1 OF 32

PROJECT TITLE
CONSTRUCT NEW PARKING LOT 3, B1000

Project Number: SGBP-24-0018

Drawing Number	Facility Number
OFF-B-6524	B1000

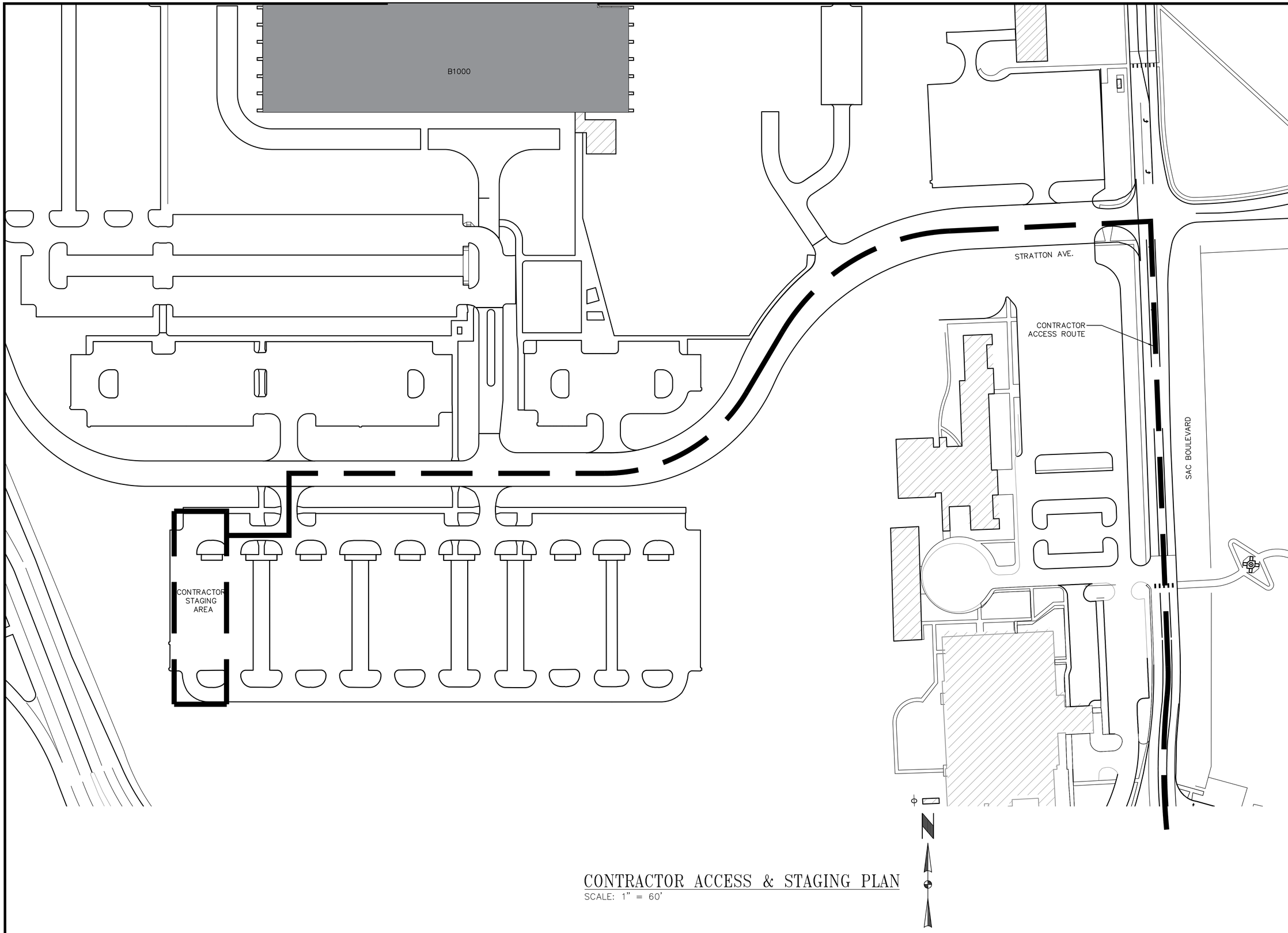

CONTRACTOR ACCESS & STAGING PLAN

SCALE: 1" = 60'

Offutt
Air Force Base

APPROVED

SIGNATURE	OFFICE
BASE CIVIL ENGINEER	
CHIEF OF ENGINEERING	
CHIEF OF DESIGN	
PROJECT MANAGER	

COORDINATION

FIRE DEPARTMENT	
SAFTY	
FORCE PROTECTION	
ENVIRONMENTAL (CEA)	
COMMUNICATION	
USING AGENCY	

"SIGNING OF THE COVER SHEET CONSTITUTES COORDINATION OF ALL DRAWINGS IN THIS PROJECT; SUBSEQUENT SHEETS NEED NOT BE SIGNED."

DESIGN FIRM

hgm ASSOCIATES INC.
ENGINEERING ARCHITECTURE SURVEYING
council bluffs omaha

WILLIAM J. GLISMANN
E-6947
PROFESSIONAL ENGINEER
STATE OF NEBRASKA

6-09-26
HGM COA NE CA-0065

Designer	Project Manager
	WJG
Drafter	Date
	6-09-26

REVISION	BY/DATE

SHEET TITLE
C0.1
CONTRACTOR ACCESS & STAGING PLAN

SHEET 2 OF 32

PROJECT TITLE
CONSTRUCT NEW PARKING LOT 3, B1000

Project Number
SGBP-24-0018

Drawing Number	Facility Number
OFF-B-6524	B1000

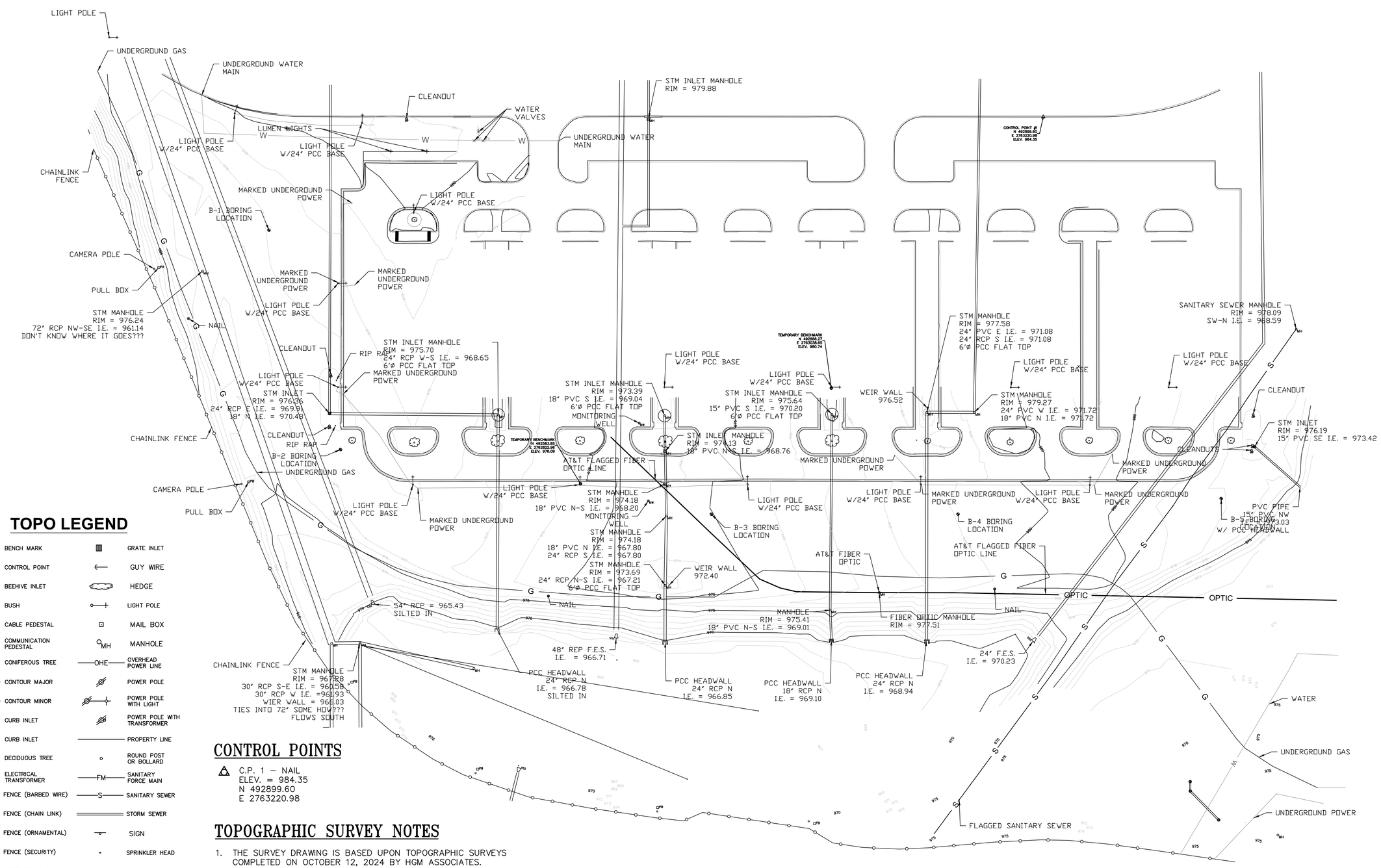

TOPO LEGEND

BENCH MARK	GRATE INLET
CONTROL POINT	GUY WIRE
BEEHIVE INLET	HEDGE
BUSH	LIGHT POLE
CABLE PEDESTAL	MAIL BOX
COMMUNICATION PEDESTAL	MANHOLE
CONIFEROUS TREE	OVERHEAD POWER LINE
CONTOUR MAJOR	POWER POLE
CONTOUR MINOR	POWER POLE WITH LIGHT
CURB INLET	POWER POLE WITH TRANSFORMER
CURB INLET	PROPERTY LINE
DECIDUOUS TREE	ROUND POST OR BOLLARD
ELECTRICAL TRANSFORMER	SANITARY FORCE MAIN
FENCE (BARBED WIRE)	SANITARY SEWER
FENCE (CHAIN LINK)	STORM SEWER
FENCE (ORNAMENTAL)	SIGN
FENCE (SECURITY)	SPRINKLER HEAD
FENCE (SPLIT WOOD)	SQUARE POST
FENCE (WOOD)	TRAFFIC SIGNAL
FIRE HYDRANT	TREE STUMP
FLARED END SECTION	UNDER GROUND POWER LINE
FOUND CONCRETE MONUMENT	UNDER GROUND FIBER OPTIC LINE
FOUND PIN	WATER MAIN
GAS LINE	WATER METER
GAS METER	WATER VALVE
GAS VALVE	WATER WELL

CONTROL POINTS

C.P. 1 – NAIL
ELEV. = 984.35
N 492899.60
E 2763220.98

TOPOGRAPHIC SURVEY NOTES

1. THE SURVEY DRAWING IS BASED UPON TOPOGRAPHIC SURVEYS COMPLETED ON OCTOBER 12, 2024 BY HGM ASSOCIATES.
2. THE LOCATIONS OF ALL AERIAL AND UNDERGROUND UTILITY FACILITIES MAY NOT BE INDICATED IN THESE PLANS. THE EXISTING UNDERGROUND UTILITIES AND STRUCTURES THAT ARE INDICATED ON THE DRAWINGS ARE PLACED ACCORDING TO INFORMATION FURNISHED TO THE ENGINEER BY OTHERS. THE ENGINEER MAKES NO GUARANTEE THAT THE UTILITIES SHOWN COMPRISE ALL SUCH UTILITIES IN THE AREA, EITHER IN SERVICE OR ABANDONED. THE CONTRACTOR SHALL MAKE EVERY EFFORT TO LOCATE ALL EXISTING UNDERGROUND INSTALLATIONS AND STRUCTURES IN THE VICINITY OF THE WORK TO BE DONE BY PROSPECTING IN ADVANCE OF EXCAVATIONS.
3. PRIOR TO PERFORMING ANY EXCAVATION ON THE SITE, THE CONTRACTOR SHALL GET A DIGGING PERMIT FROM THE BASE TO VERIFY UTILITIES ON SITE. SEE THE SPECIFICATIONS FOR INFORMATION ON THE DIGGING PERMIT.

TOPOGRAPHIC SURVEY

SCALE: 1" = 40'

Offutt Air Force Base

APPROVED	
SIGNATURE	OFFICE
BASE CIVIL ENGINEER	
CHIEF OF ENGINEERING	
CHIEF OF DESIGN	
PROJECT MANAGER	
COORDINATION	
FIRE DEPARTMENT	
SAFTY	
FORCE PROTECTION	
ENVIRONMENTAL (CEA)	
COMMUNICATION	
USING AGENCY	

"SIGNING OF THE COVER SHEET CONSTITUTES COORDINATION OF ALL DRAWINGS IN THIS PROJECT; SUBSEQUENT SHEETS NEED NOT BE SIGNED."

DESIGN FIRM

hgm ASSOCIATES INC.
ENGINEERING ARCHITECTURE SURVEYING
council bluffs omaha

PROFESSIONAL ENGINEER WILLIAM J. GLISMANN E-6947 STATE OF NEBRASKA

6-09-26
HGM COA NE CA-0065

Designer	Project Manager
	WJG
Drafter	Date
	6-09-26

REVISION	BY/DATE

SHEET TITLE
C0.2 TOPOGRAPHIC SURVEY

SHEET 3 OF 32

PROJECT TITLE
CONSTRUCT NEW PARKING LOT 3, B1000

Project Number
SGBP-24-0018

Drawing Number	Facility Number
OFF-B-6524	B1000

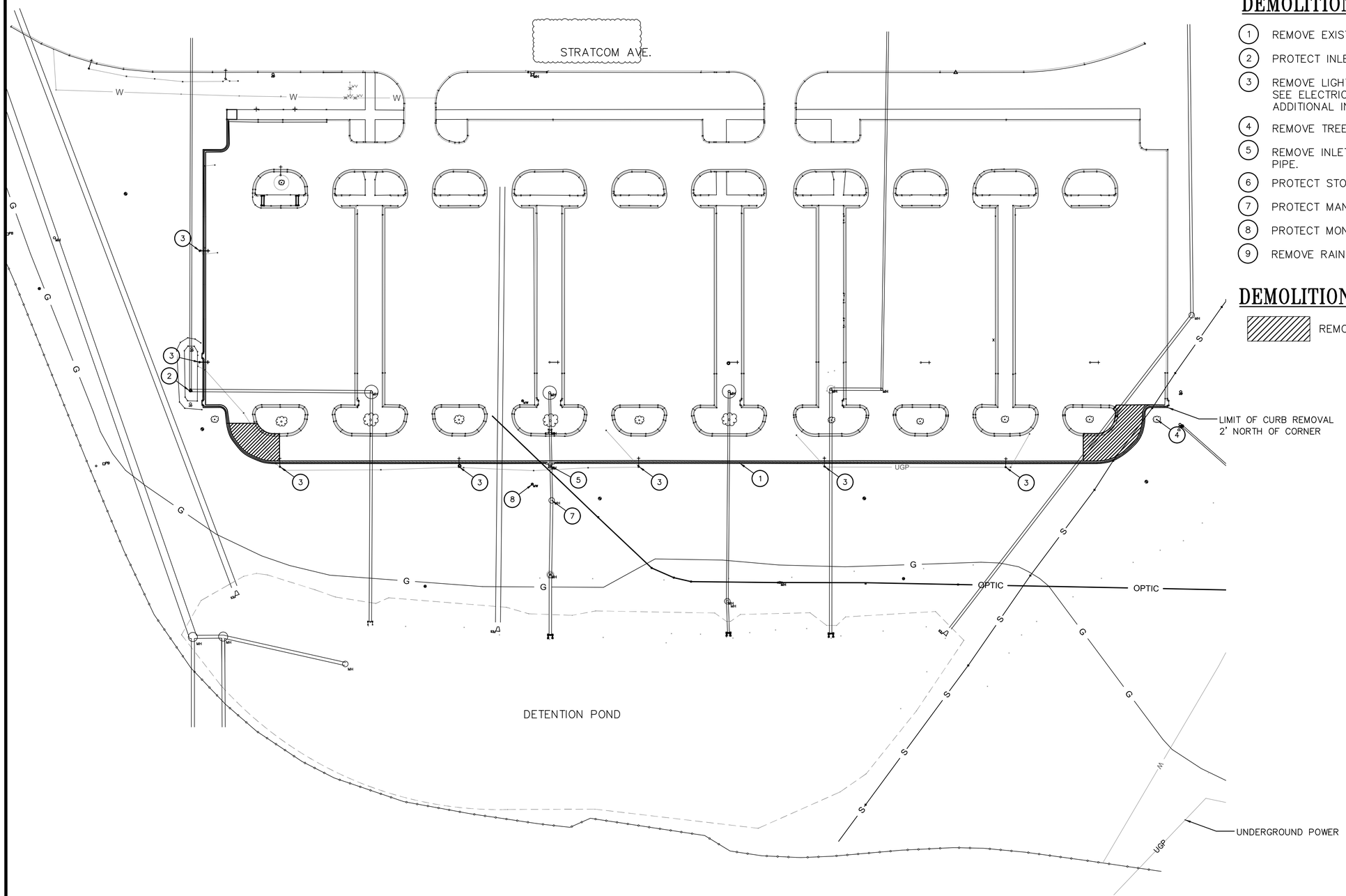

DEMOLITION KEY NOTES

1. REMOVE EXISTING CURB AND GUTTER PAVEMENT
2. PROTECT INLET
3. REMOVE LIGHT POLE AND BASE SEE ELECTRICAL PLAN E1.1 FOR ADDITIONAL INFORMATION.
4. REMOVE TREE (3" DIAMETER).
5. REMOVE INLET & REPLACE SEGMENT WITH 18" RCP PIPE.
6. PROTECT STORM SEWER CLEANOUT
7. PROTECT MANHOLE
8. PROTECT MONITORING WELL
9. REMOVE RAIN GARDEN SUBDRAIN PIPE

DEMOLITION LEGEND

REMOVE PAVEMENT

REMOVAL PLAN - BASE BID

SCALE: 1" = 40'

Offutt
Air Force Base

APPROVED	
SIGNATURE	OFFICE
BASE CIVIL ENGINEER	
CHIEF OF ENGINEERING	
CHIEF OF DESIGN	
PROJECT MANAGER	
COORDINATION	
FIRE DEPARTMENT	
SAFTY	
FORCE PROTECTION	
ENVIRONMENTAL (CEA)	
COMMUNICATION	
USING AGENCY	

"SIGNING OF THE COVER SHEET CONSTITUTES COORDINATION OF ALL DRAWINGS IN THIS PROJECT; SUBSEQUENT SHEETS NEED NOT BE SIGNED."

DESIGN FIRM

hgm ASSOCIATES INC.
ENGINEERING ARCHITECTURE SURVEYING
council bluffs omaha

PROFESSIONAL ENGINEER
WILLIAM J. GLISMANN
E-6947
STATE OF NEBRASKA

6-09-26
HGM COA NE CA-0065

Designer	Project Manager
	WJG
Drafter	Date
	6-09-26

REVISION	BY/DATE

SHEET TITLE
C1.1
REMOVAL PLAN

SHEET 4 OF 32

PROJECT TITLE
CONSTRUCT NEW PARKING LOT 3, B1000

Project Number
SGBP-24-0018

Drawing Number OFF-B-6524
Facility Number B1000

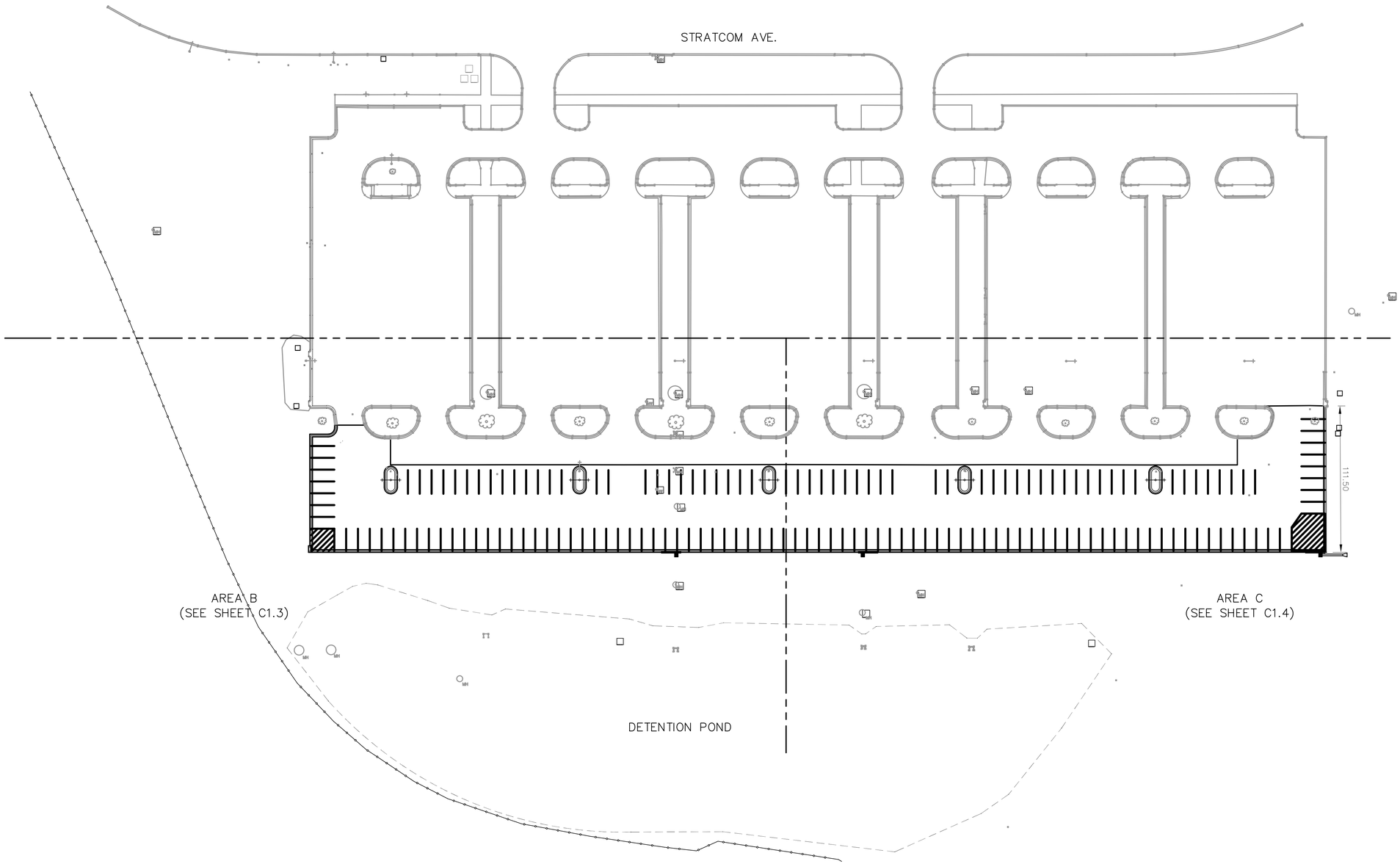

SITE PLAN – BASE BID

SCALE: 1" = 40'

Offutt
Air Force Base

APPROVED

SIGNATURE	OFFICE
BASE CIVIL ENGINEER	
CHIEF OF ENGINEERING	
CHIEF OF DESIGN	
PROJECT MANAGER	

COORDINATION

FIRE DEPARTMENT	
SAFTY	
FORCE PROTECTION	
ENVIRONMENTAL (CEA)	
COMMUNICATION	
USING AGENCY	

"SIGNING OF THE COVER SHEET CONSTITUTES COORDINATION OF ALL DRAWINGS IN THIS PROJECT; SUBSEQUENT SHEETS NEED NOT BE SIGNED."

DESIGN FIRM

hgm ASSOCIATES INC.
ENGINEERING ARCHITECTURE SURVEYING
council bluffs omaha

PROFESSIONAL ENGINEER
WILLIAM J. GLISMANN
E-6947
STATE OF NEBRASKA

6-09-26
HGM COA NE CA-0065

Designer	Project Manager
	WJG
Drafter	Date
	6-09-26

REVISION	BY/DATE

SHEET TITLE
C1.2
SITE PLAN – BASE BID

SHEET 5 OF 32

PROJECT TITLE
CONSTRUCT NEW PARKING LOT 3, B1000

Project Number
SGBP-24-0018

Drawing Number OFF-B-6524
Facility Number B1000

CURVE DATA

1 5' R.P. N 492616.16 E 2762630.95	2 4' R.P. N 492695.20 E 2762678.77	4 4' R.P. N 492581.77 E 2762822.44	6 4' R.P. N 492581.77 E 2762966.69
P.C. N 492611.16 E 2762630.95	P.C. N 492581.77 E 2762674.77	P.C. N 492581.77 E 2762818.44	P.C. N 492581.77 E 2762962.69
P.T. N 492616.16 E 2762635.95	P.T. N 492581.77 E 2762682.77	P.T. N 492581.77 E 2762826.44	P.T. N 492581.77 E 2762970.69
	3 4' R.P. N 492570.77 E 2762678.77	5 4' R.P. N 492570.77 E 2762822.44	7 4' R.P. N 492570.77 E 2762966.69
	P.C. N 492570.77 E 2762682.77	P.C. N 492570.77 E 2762826.44	P.C. N 492570.77 E 2762970.69
	P.T. N 492570.77 E 2762674.77	P.T. N 492570.77 E 2762818.44	P.T. N 492570.77 E 2762962.69

CONSTRUCTION KEY NOTES

1. ASPHALTIC CONCRETE PAVEMENT
2. 6"CONCRETE CURB & GUTTER, SEE DETAIL ON SHEET C3.1
3. PAINT STRIPING (4" WIDE – WHITE)
4. 4" P.C. CONCRETE SIDEWALK
5. CURB INLET, SEE DRAINAGE PLAN ON SHEET C1.9
6. AREA INLET, SEE DRAINAGE PLAN ON SHEET C1.9
7. MANHOLE, SEE DRAINAGE PLAN ON SHEET C1.9
8. CURB OPENING SEE DETAIL THIS SHEET

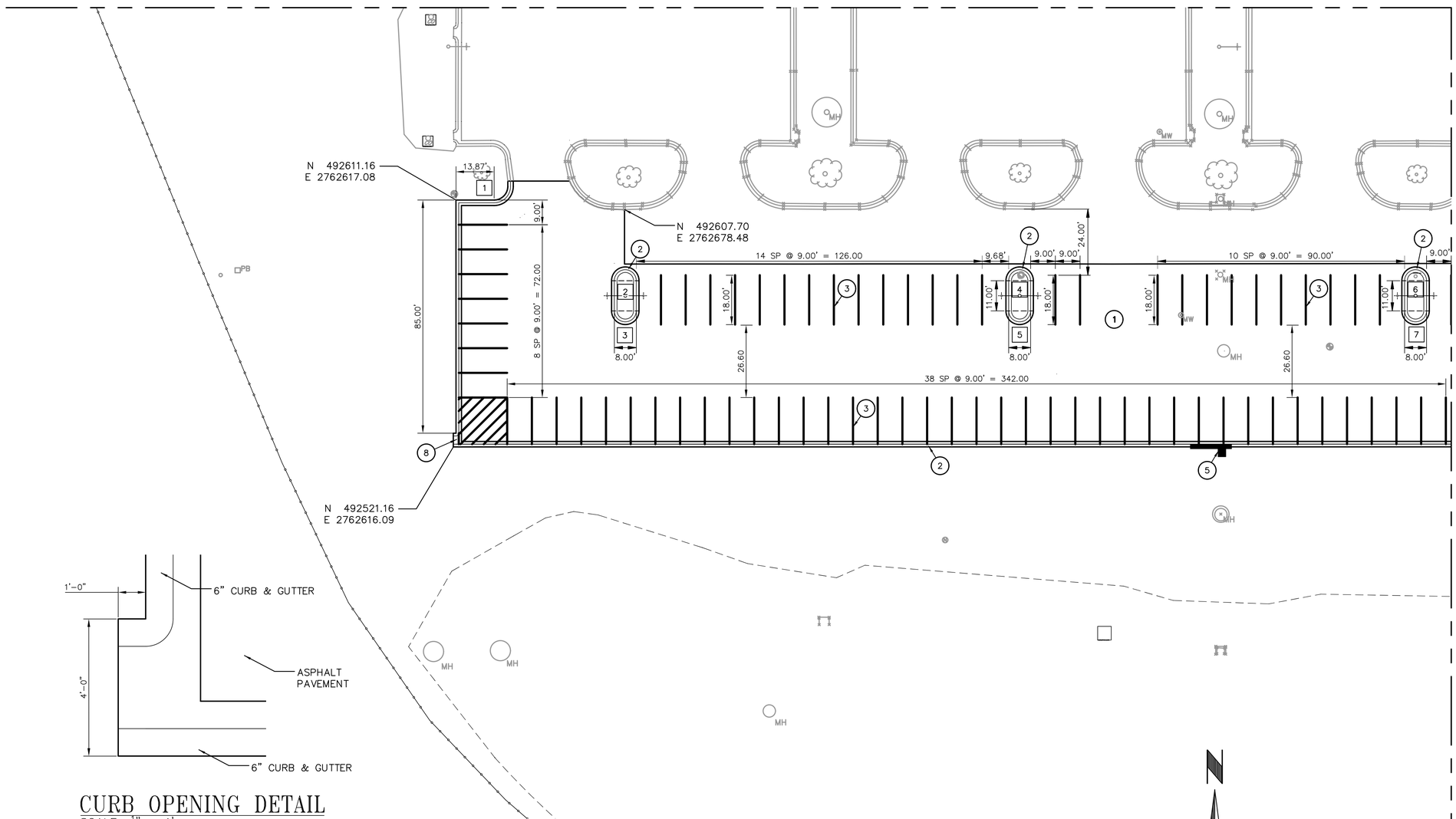

CURB OPENING DETAIL

SCALE: $\frac{1}{2}$" = 1'

ENLARGED SITE PLAN AREA B – BASE BID

SCALE: 1" = 20'

Offutt Air Force Base

APPROVED	
SIGNATURE	OFFICE
BASE CIVIL ENGINEER	
CHIEF OF ENGINEERING	
CHIEF OF DESIGN	
PROJECT MANAGER	
COORDINATION	
FIRE DEPARTMENT	
SAFTY	
FORCE PROTECTION	
ENVIRONMENTAL (CEA)	
COMMUNICATION	
USING AGENCY	

"SIGNING OF THE COVER SHEET CONSTITUTES COORDINATION OF ALL DRAWINGS IN THIS PROJECT; SUBSEQUENT SHEETS NEED NOT BE SIGNED."

DESIGN FIRM

hgm ASSOCIATES INC.
ENGINEERING ARCHITECTURE SURVEYING
council bluffs omaha

WILLIAM J. GLISMANN E-6947 PROFESSIONAL ENGINEER STATE OF NEBRASKA

6-09-26
HGM COA NE CA-0065

Designer	Project Manager
	WJG
Drafter	Date
	6-09-26

REVISION	BY/DATE

SHEET TITLE
C1.3
ENLARGED SITE PLAN
AREA B – BASE BID

SHEET 6 OF 32

PROJECT TITLE
CONSTRUCT NEW PARKING LOT 3, B1000

Project Number
SGBP-24-0018

Drawing Number OFF-B-6524
Facility Number B1000

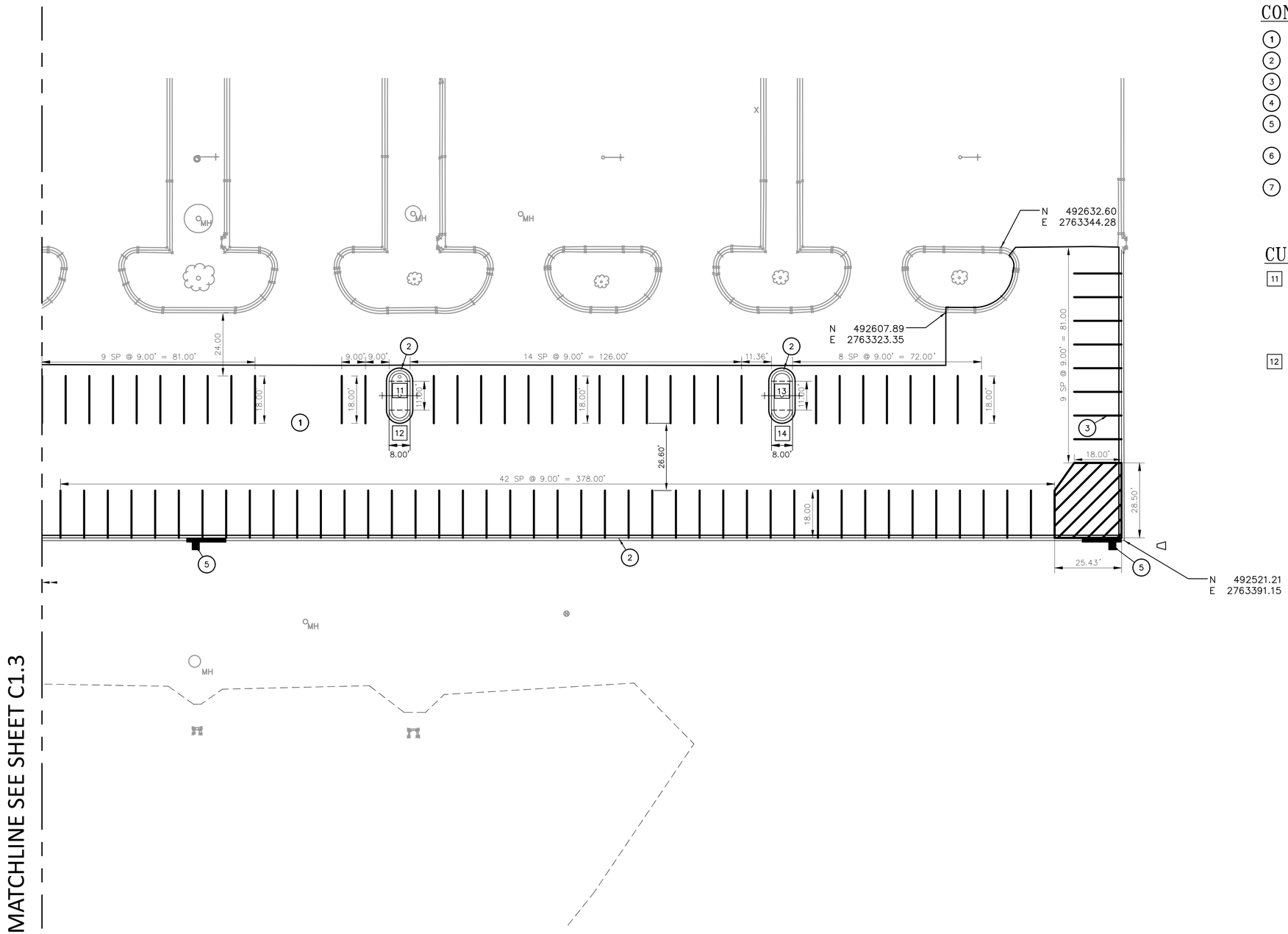

CONSTRUCTION KEY NOTES

1. ASPHALTIC CONCRETE PAVEMENT
2. 6"CONCRETE CURB & GUTTER, SEE DETAIL ON SHEET C3.1
3. PAINT STRIPING (4" WIDE – WHITE)
4. 4" P.C. CONCRETE SIDEWALK
5. CURB INLET, SEE DRAINAGE PLAN ON SHEET C1.9
6. AREA INLET, SEE DRAINAGE PLAN ON SHEET C1.9
7. MANHOLE, SEE DRAINAGE PLAN ON SHEET C1.9

CURVE DATA

11	4' R.P. N 492581.77 E 2763115.67	13	4' R.P. N 492581.77 E 2763261.03
	P.C. N 492581.77 E 2763111.67		P.C. N 492581.77 E 2763257.03
	P.T. N 492581.77 E 2763119.67		P.T. N 492581.77 E 2763265.03
12	4' R.P. N 492570.77 E 2763115.67	14	5' R.P. N 492570.77 E 2763261.03
	P.C. N 492570.77 E 2763119.67		P.C. N 492570.77 E 2763265.03
	P.T. N 492570.77 E 2763111.67		P.T. N 492570.77 E 2763257.03

ENLARGED SITE PLAN AREA C – BASE BID

SCALE: 1" = 20'

Offutt Air Force Base

APPROVED	
SIGNATURE	OFFICE
BASE CIVIL ENGINEER	
CHIEF OF ENGINEERING	
CHIEF OF DESIGN	
PROJECT MANAGER	
COORDINATION	
FIRE DEPARTMENT	
SAFETY	
FORCE PROTECTION	
ENVIRONMENTAL (CEA)	
COMMUNICATION	
USING AGENCY	

"SIGNING OF THE COVER SHEET CONSTITUTES COORDINATION OF ALL DRAWINGS IN THIS PROJECT; SUBSEQUENT SHEETS NEED NOT BE SIGNED."

DESIGN FIRM

hgm ASSOCIATES INC.
ENGINEERING ARCHITECTURE SURVEYING
council bluffs omaha

PROFESSIONAL ENGINEER WILLIAM J. GLISMANN E-6947 STATE OF NEBRASKA

6-09-26
HGM COA NE CA-0065

Designer	Project Manager WJG
Drafter	Date 6-09-26

REVISION	BY/DATE

SHEET TITLE
C1.4
ENLARGED SITE PLAN
AREA C – BASE BID

SHEET 7 OF 32

PROJECT TITLE
CONSTRUCT NEW PARKING LOT 3, B1000

Project Number SGBP-24-0018

Drawing Number OFF-B-6524 | Facility Number B1000

GRADING LEGEND

990.00 / 990.00T	PAVEMENT SLAB ELEVATION / TOP OF CURB ELEVATION
—990—	EXISTING CONTOUR
—990—	PROPOSED CONTOUR

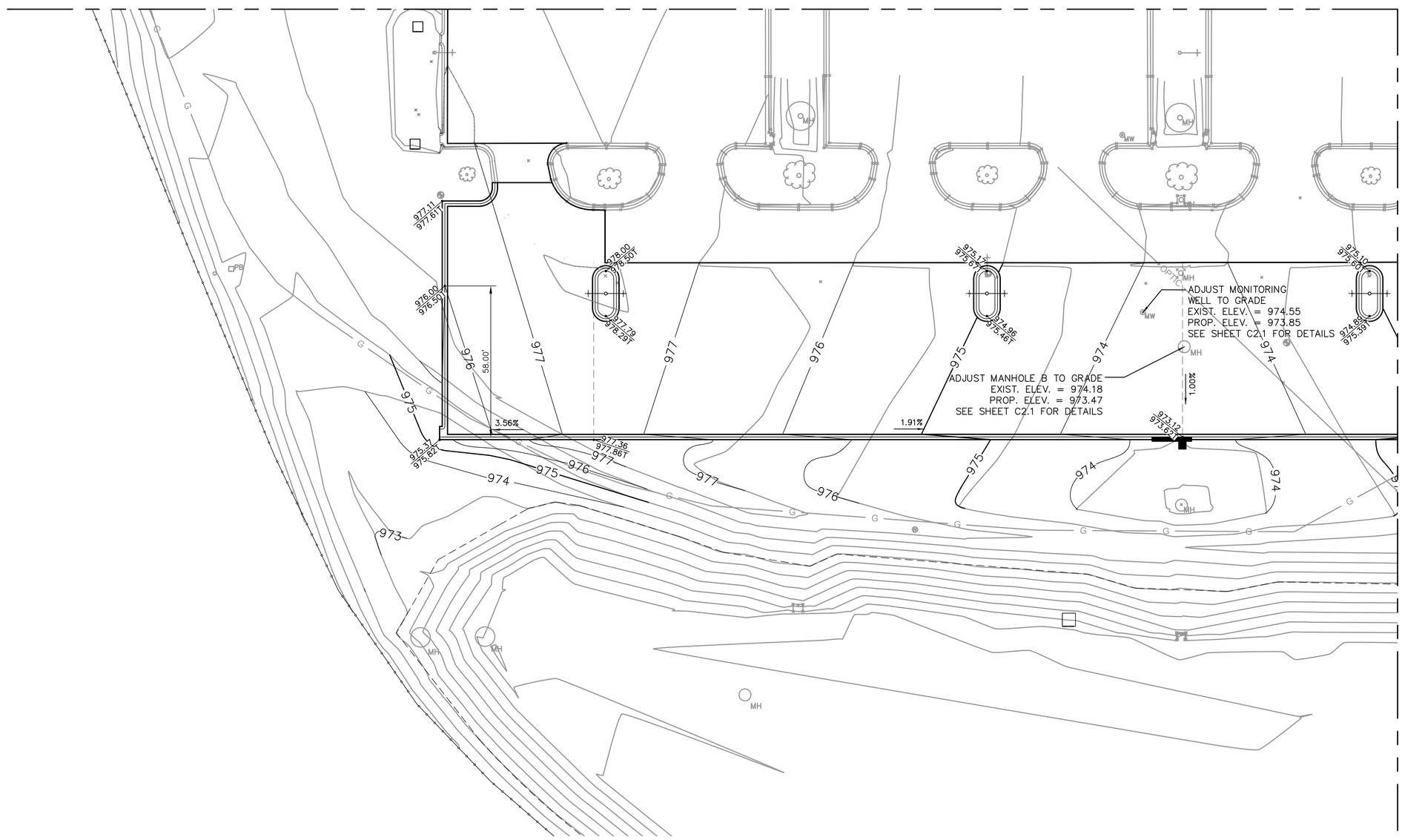

GRADING PLAN AREA B – BASE BID

SCALE: 1" = 20'

Offutt Air Force Base

APPROVED

SIGNATURE	OFFICE
BASE CIVIL ENGINEER	
CHIEF OF ENGINEERING	
CHIEF OF DESIGN	
PROJECT MANAGER	

COORDINATION

FIRE DEPARTMENT	
SAFTY	
FORCE PROTECTION	
ENVIRONMENTAL (CEA)	
COMMUNICATION	
USING AGENCY	

"SIGNING OF THE COVER SHEET CONSTITUTES COORDINATION OF ALL DRAWINGS IN THIS PROJECT; SUBSEQUENT SHEETS NEED NOT BE SIGNED."

DESIGN FIRM

hgm ASSOCIATES INC.
ENGINEERING ARCHITECTURE SURVEYING
council bluffs omaha

PROFESSIONAL ENGINEER WILLIAM J. GLISMANN E-6947 STATE OF NEBRASKA

6-09-26
HGM COA NE CA-0065

Designer	Project Manager
	WJG
Drafter	Date
	6-09-26

REVISION	BY/DATE

SHEET TITLE
C1.5
GRADING PLAN
AREA B – BASE BID

SHEET 8 OF 32

PROJECT TITLE
CONSTRUCT NEW PARKING LOT 3, B1000

Project Number
SGBP-24-0018

Drawing Number OFF-B-6524
Facility Number B1000

GRADING LEGEND

990.00 / 990.00T	PAVEMENT SLAB ELEVATION / TOP OF CURB ELEVATION
—990—	EXISTING CONTOUR
—990—	PROPOSED CONTOUR

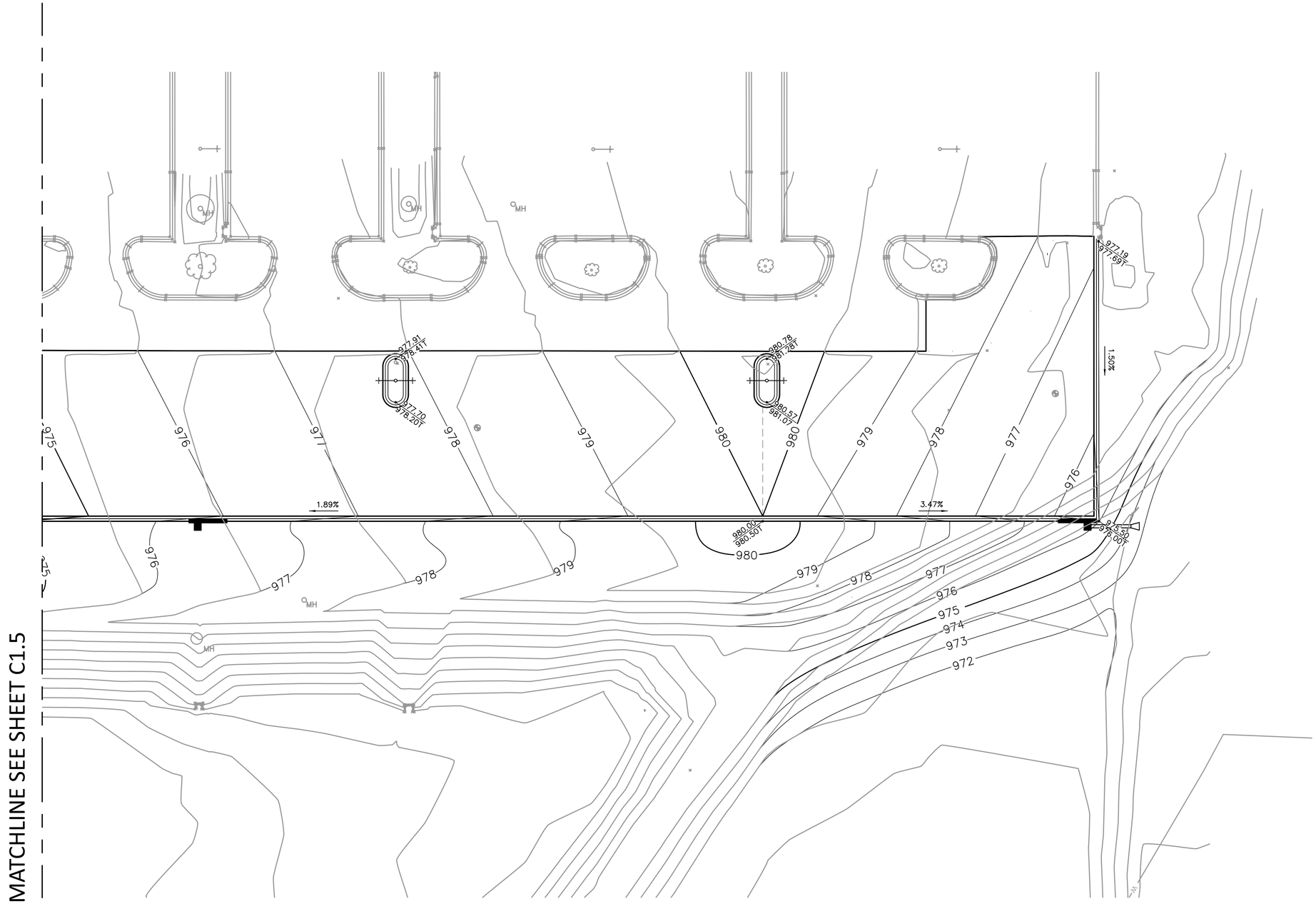

GRADING PLAN AREA C – BASE BID

SCALE: 1" = 20'

Offutt
Air Force Base

APPROVED

SIGNATURE	OFFICE
BASE CIVIL ENGINEER	
CHIEF OF ENGINEERING	
CHIEF OF DESIGN	
PROJECT MANAGER	

COORDINATION

FIRE DEPARTMENT	
SAFTY	
FORCE PROTECTION	
ENVIRONMENTAL (CEA)	
COMMUNICATION	
USING AGENCY	

"SIGNING OF THE COVER SHEET CONSTITUTES COORDINATION OF ALL DRAWINGS IN THIS PROJECT; SUBSEQUENT SHEETS NEED NOT BE SIGNED."

DESIGN FIRM

hgm ASSOCIATES INC.
ENGINEERING ARCHITECTURE SURVEYING
council bluffs omaha

PROFESSIONAL ENGINEER
WILLIAM J. GLISMANN
E-6947
STATE OF NEBRASKA

6-09-26
HGM COA NE CA-0065

Designer	Project Manager
	WJG
Drafter	Date
	6-09-26

REVISION	BY/DATE

SHEET TITLE
C1.6
GRADING PLAN
AREA C – BASE BID

SHEET 9 OF 32

PROJECT TITLE
CONSTRUCT NEW
PARKING LOT 3, B1000

Project Number
SGBP-24-0018

Drawing Number	Facility Number
OFF-B-6524	B1000

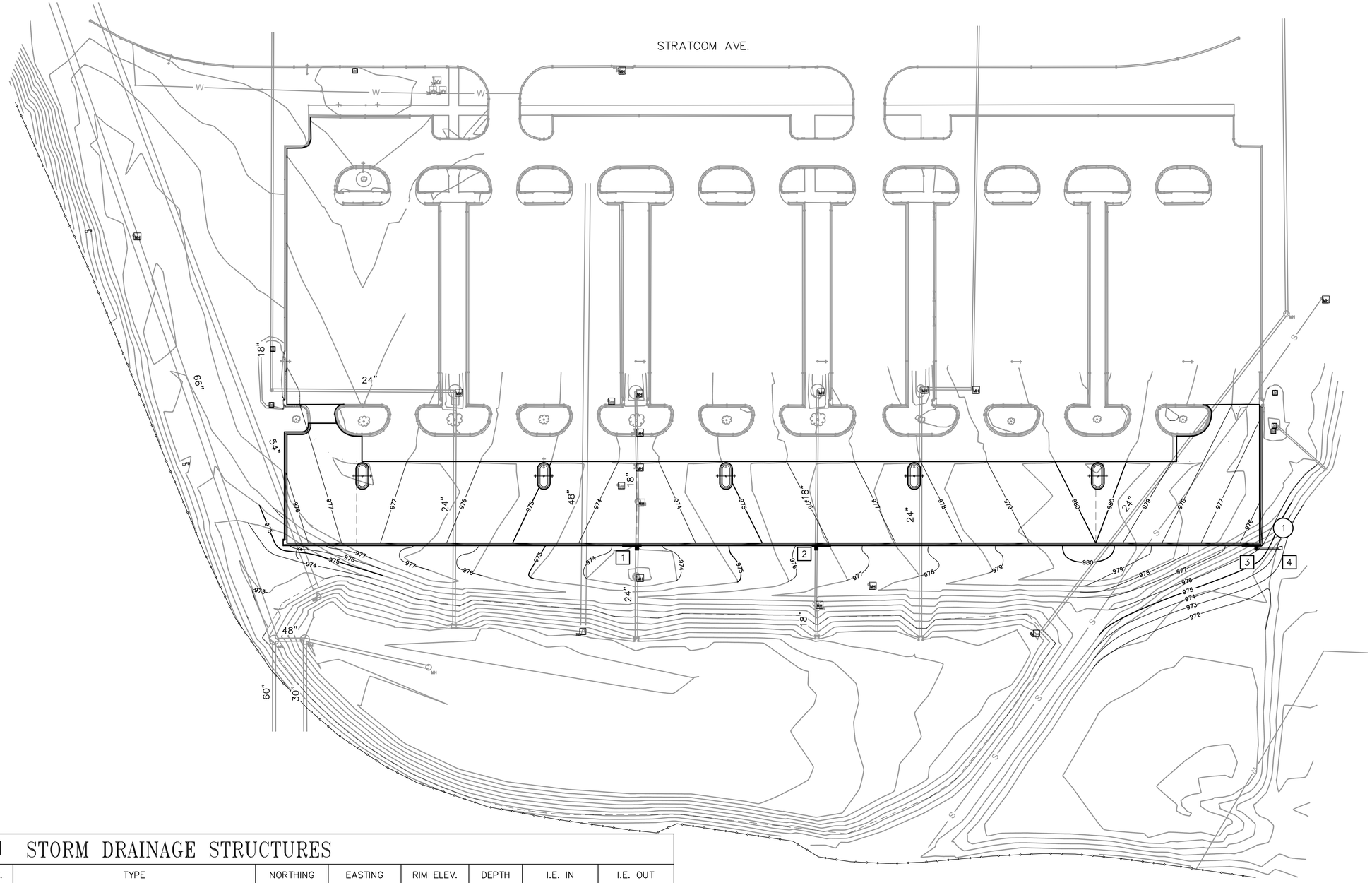

STORM DRAINAGE STRUCTURES

NO.	TYPE	NORTHING	EASTING	RIM ELEV.	DEPTH	I.E. IN	I.E. OUT
1	CURB INLET SEE DETAIL SHEET C3.3	492519.18	2762896.16	973.62	6.00'	–	967.62
2	CURB INLET SEE DETAIL SHEET C3.3	492519.19	2763038.17	976.31	6.80'	–	969.39
3	CURB INLET SEE DETAIL SHEET C3.3	492519.21	2763386.65	976.15	3.90'	–	972.25
4	FLARED END SECTION SEE DETAIL SHEET C3.2	492519.88	2763403.68	–	–	–	972.00

STORMWATER DRAINAGE PIPE

NO.	SIZE	LENGTH	MATERIAL	SLOPE	REMARKS
1	15"	17'	RCP	1.47%	CURB INLET 8 TO FLARED END SECTION 9

DRAINAGE PLAN – BASE BID

SCALE: 1" = 40'

Offutt
Air Force Base

APPROVED

SIGNATURE	OFFICE
BASE CIVIL ENGINEER	
CHIEF OF ENGINEERING	
CHIEF OF DESIGN	
PROJECT MANAGER	

COORDINATION

FIRE DEPARTMENT	
SAFTY	
FORCE PROTECTION	
ENVIRONMENTAL (CEA)	
COMMUNICATION	
USING AGENCY	

"SIGNING OF THE COVER SHEET CONSTITUTES COORDINATION OF ALL DRAWINGS IN THIS PROJECT; SUBSEQUENT SHEETS NEED NOT BE SIGNED."

DESIGN FIRM

hgm ASSOCIATES INC.
ENGINEERING ARCHITECTURE SURVEYING
council bluffs omaha

WILLIAM J. GLISMANN
E-6947
PROFESSIONAL ENGINEER
STATE OF NEBRASKA

6-09-26
HGM COA NE CA-0065

Designer	Project Manager
	WJG
Drafter	Date
	6-09-26

REVISION	BY/DATE

SHEET TITLE
C1.7
DRAINAGE PLAN – BASE BID

SHEET 10 OF 32

PROJECT TITLE
CONSTRUCT NEW PARKING LOT 3, B1000

Project Number
SGBP-24-0018

Drawing Number OFF-B-6524
Facility Number B1000

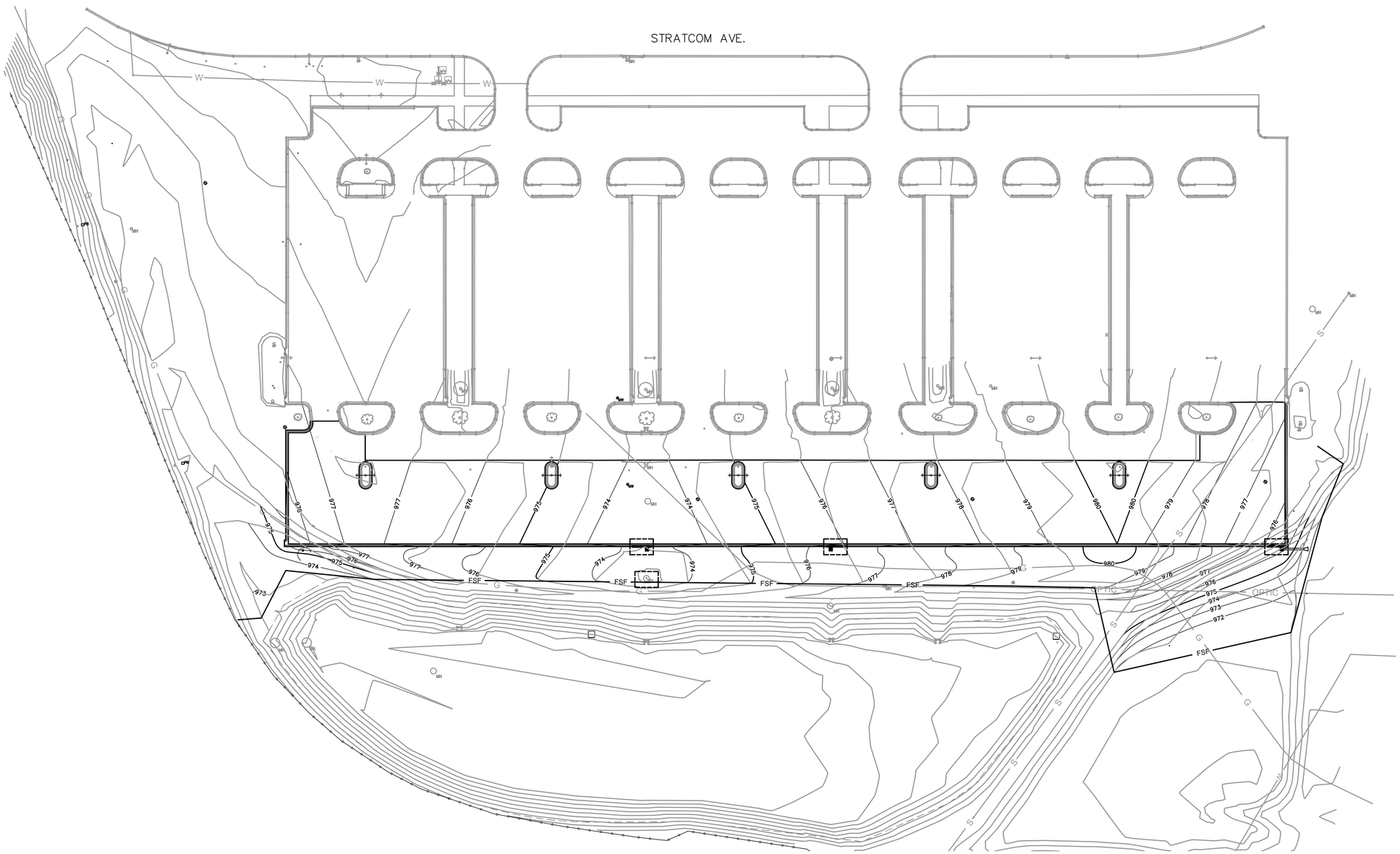

EROSION CONTROL PLAN - BASE BID

SCALE: 1" = 40'

EROSION CONTROL NOTES

1. EROSION CONTROL MEASURES SHALL NOT BE REMOVED WITHOUT INSPECTOR AND APPLICABLE GOVERNMENT APPROVAL.

LEGEND

FSF — CONSTRUCT SILT FENCE

INLET SEDIMENT FILTER

Offutt
Air Force Base

APPROVED

SIGNATURE	OFFICE
BASE CIVIL ENGINEER	
CHIEF OF ENGINEERING	
CHIEF OF DESIGN	
PROJECT MANAGER	

COORDINATION

FIRE DEPARTMENT	
SAFTY	
FORCE PROTECTION	
ENVIRONMENTAL (CEA)	
COMMUNICATION	
USING AGENCY	

"SIGNING OF THE COVER SHEET CONSTITUTES COORDINATION OF ALL DRAWINGS IN THIS PROJECT; SUBSEQUENT SHEETS NEED NOT BE SIGNED."

DESIGN FIRM

hgm ASSOCIATES INC.
ENGINEERING ARCHITECTURE SURVEYING
council bluffs omaha

PROFESSIONAL ENGINEER
WILLIAM J. GLISMANN
E-6947
STATE OF NEBRASKA

6-09-26
HGM COA NE CA-0065

Designer	Project Manager
	WJG
Drafter	Date
	6-09-26

REVISION	BY/DATE

SHEET TITLE
C1.8
EROSION CONTROL PLAN - BASE BID

SHEET 11 OF 32

PROJECT TITLE
CONSTRUCT NEW PARKING LOT 3, B1000

Project Number
SGBP-24-0018

Drawing Number OFF-B-6524
Facility Number B1000

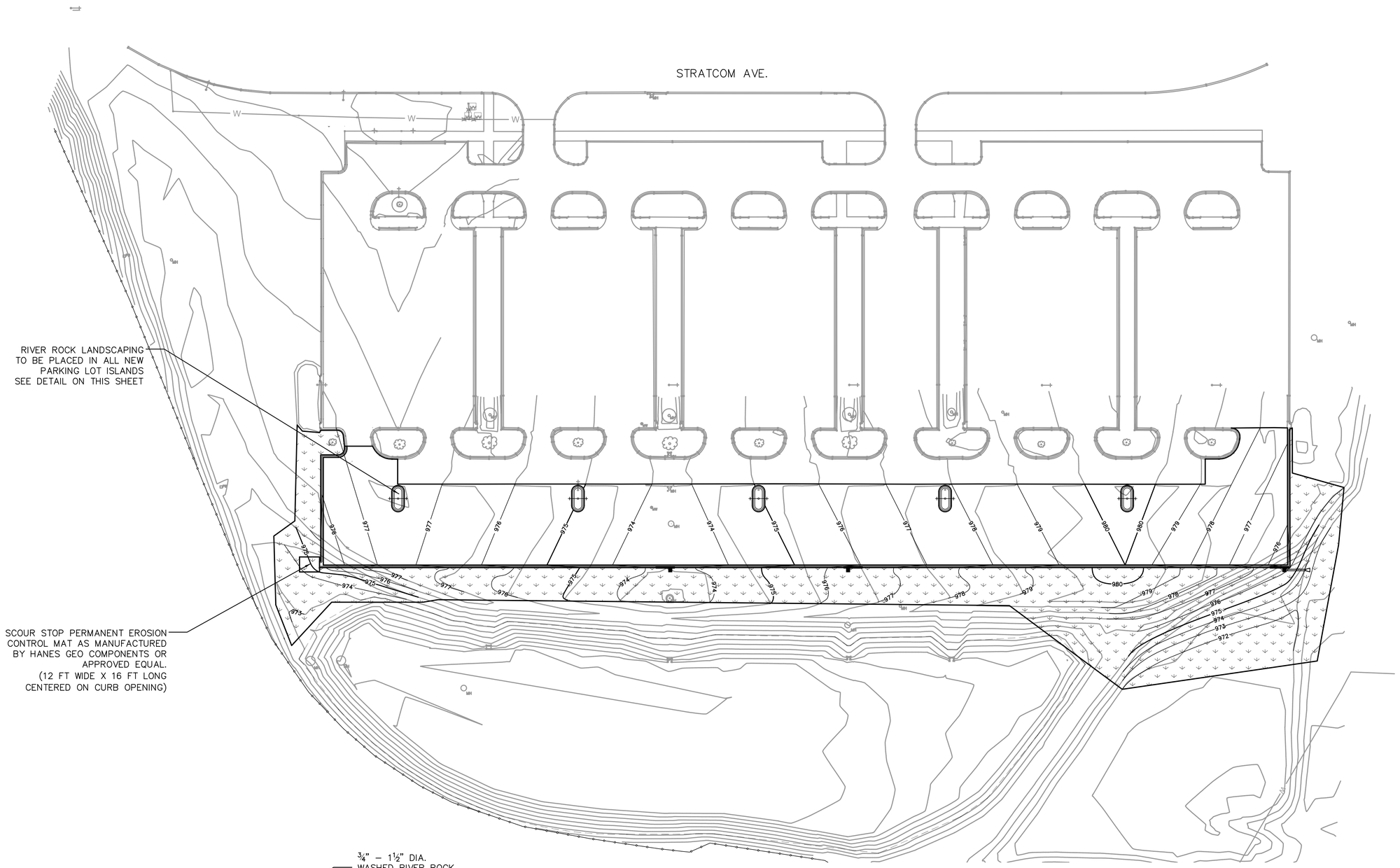

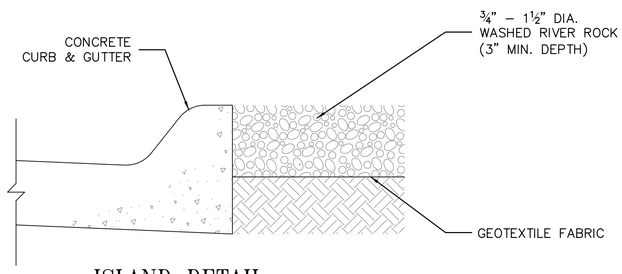

ISLAND DETAIL

NO SCALE

PERMANENT STABILIZATION PLAN – BASE BID

SCALE: 1" = 40'

NOTES

1. ALL AREAS DISTURBED BY CONSTRUCTION AND GRADING OPERATIONS SHALL BE SEEDED.
2. CONTRACTOR TO PROVIDE SAMPLE OF WASHED RIVER ROCK TO GOVERNMENT FOR APPROVAL.
3. GEOTEXTILE FABRIC SHALL BE MIAFI 140N AS MANUFACTURED BY SOLMAX OR APPROVED EQUAL.

LEGEND

SEEDING WITH EROSION CONTROL BLANKET

Offutt Air Force Base

APPROVED	
SIGNATURE	OFFICE
BASE CIVIL ENGINEER	
CHIEF OF ENGINEERING	
CHIEF OF DESIGN	
PROJECT MANAGER	
COORDINATION	
FIRE DEPARTMENT	
SAFTY	
FORCE PROTECTION	
ENVIRONMENTAL (CEA)	
COMMUNICATION	
USING AGENCY	

"SIGNING OF THE COVER SHEET CONSTITUTES COORDINATION OF ALL DRAWINGS IN THIS PROJECT; SUBSEQUENT SHEETS NEED NOT BE SIGNED."

DESIGN FIRM

hgm ASSOCIATES INC.
ENGINEERING ARCHITECTURE SURVEYING
council bluffs omaha

PROFESSIONAL ENGINEER WILLIAM J. GLISMANN E-6947 STATE OF NEBRASKA

6-09-26
HGM COA NE CA-0065

Designer	Project Manager
	WJG
Drafter	Date
	6-09-26

REVISION	BY/DATE

SHEET TITLE C1.9
PERMANENT STABILIZATION PLAN – BASE BID

SHEET 12 OF 32

PROJECT TITLE
CONSTRUCT NEW PARKING LOT 3, B1000

Project Number SGBP-24-0018

Drawing Number OFF-B-6524 Facility Number B1000

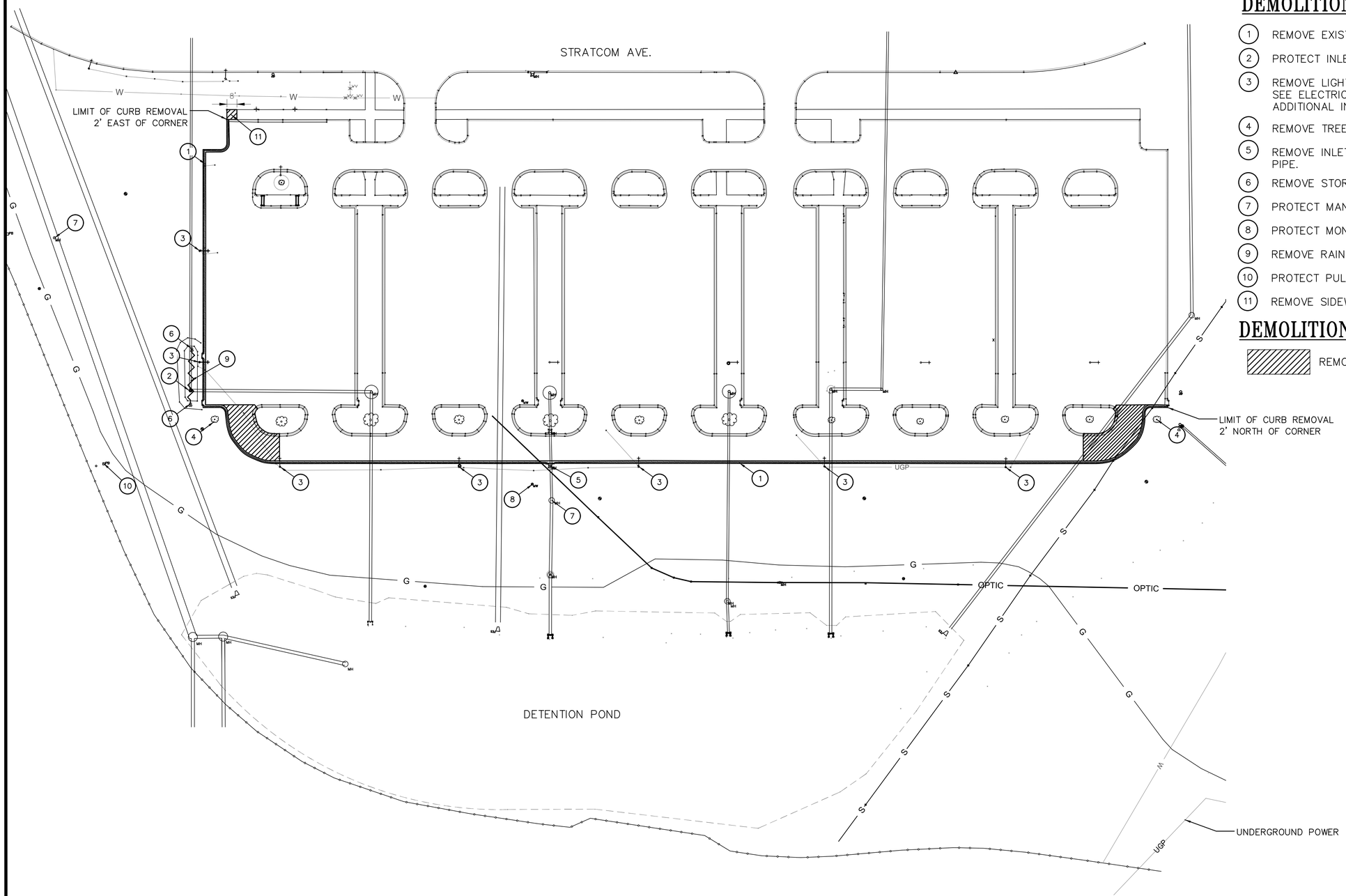

DEMOLITION KEY NOTES

1. REMOVE EXISTING CURB AND GUTTER PAVEMENT
2. PROTECT INLET
3. REMOVE LIGHT POLE AND BASE SEE ELECTRICAL PLAN E1.1 FOR ADDITIONAL INFORMATION.
4. REMOVE TREE (3" DIAMETER).
5. REMOVE INLET & REPLACE SEGMENT WITH 18" RCP PIPE.
6. REMOVE STORM SEWER CLEANOUT
7. PROTECT MANHOLE
8. PROTECT MONITORING WELL
9. REMOVE RAIN GARDEN SUBDRAIN PIPE
10. PROTECT PULL BOX
11. REMOVE SIDEWALK TO NEAREST JOINT

DEMOLITION LEGEND

REMOVE PAVEMENT

REMOVAL PLAN - ALTERNATE

SCALE: 1" = 40'

Offutt
Air Force Base

APPROVED	
SIGNATURE	OFFICE
BASE CIVIL ENGINEER	
CHIEF OF ENGINEERING	
CHIEF OF DESIGN	
PROJECT MANAGER	
COORDINATION	
FIRE DEPARTMENT	
SAFTY	
FORCE PROTECTION	
ENVIRONMENTAL (CEA)	
COMMUNICATION	
USING AGENCY	

"SIGNING OF THE COVER SHEET CONSTITUTES COORDINATION OF ALL DRAWINGS IN THIS PROJECT; SUBSEQUENT SHEETS NEED NOT BE SIGNED."

DESIGN FIRM

hgm ASSOCIATES INC.
ENGINEERING ARCHITECTURE SURVEYING
council bluffs omaha

PROFESSIONAL ENGINEER
WILLIAM J. GLISMANN
E-6947
STATE OF NEBRASKA

6-09-26
HGM COA NE CA-0065

Designer	Project Manager
	WJG
Drafter	Date
	6-09-26

REVISION	BY/DATE

SHEET TITLE
C2.1
REMOVAL PLAN - ALTERNATE

SHEET 13 OF 32

PROJECT TITLE
CONSTRUCT NEW PARKING LOT 3, B1000

Project Number
SGBP-24-0018

Drawing Number OFF-B-6524
Facility Number B1000

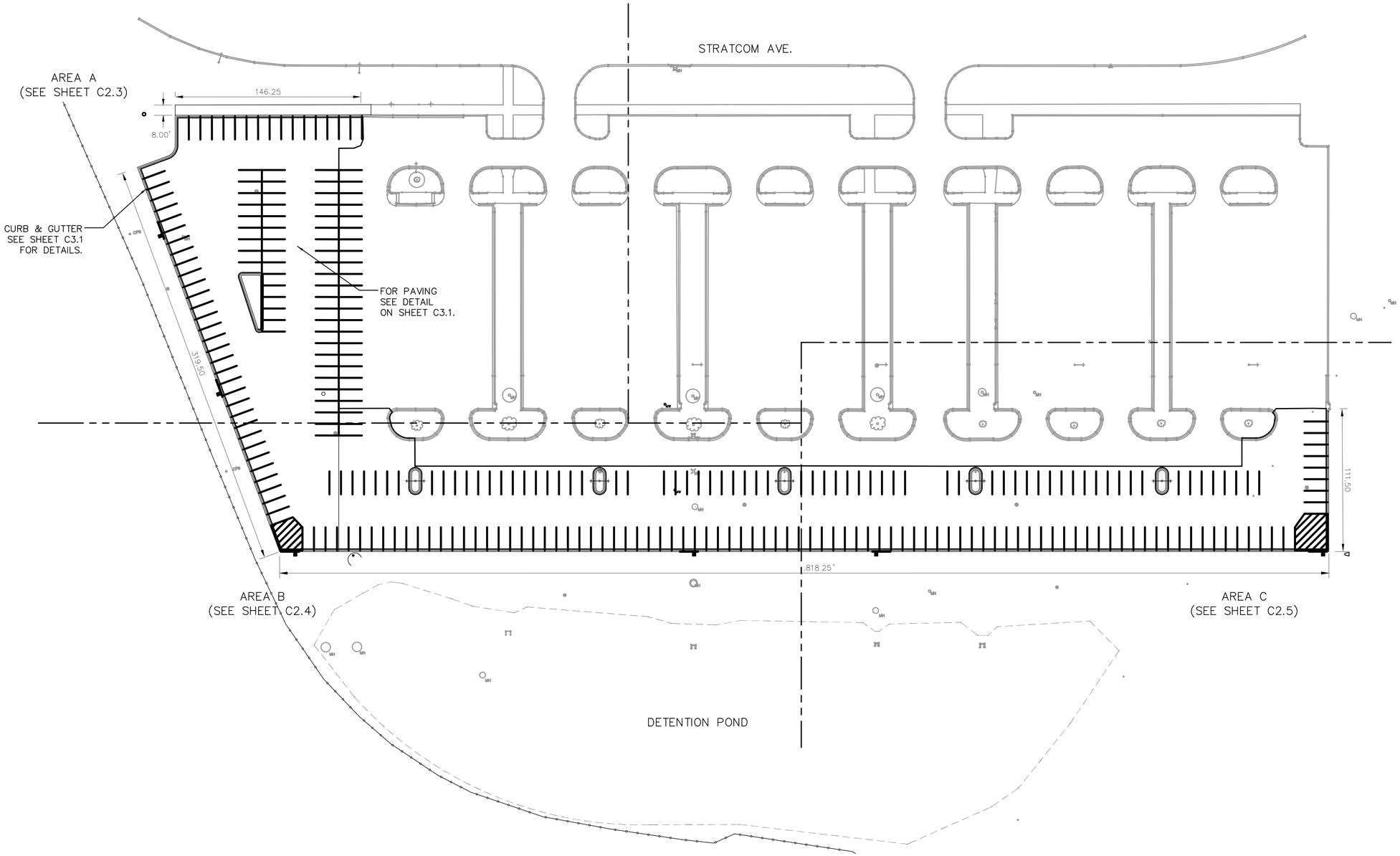

SITE PLAN - ALTERNATE

SCALE: 1" = 40'

Offutt
Air Force Base

APPROVED

SIGNATURE	OFFICE
BASE CIVIL ENGINEER	
CHIEF OF ENGINEERING	
CHIEF OF DESIGN	
PROJECT MANAGER	

COORDINATION

FIRE DEPARTMENT	
SAFTY	
FORCE PROTECTION	
ENVIRONMENTAL (CEA)	
COMMUNICATION	
USING AGENCY	

"SIGNING OF THE COVER SHEET CONSTITUTES COORDINATION OF ALL DRAWINGS IN THIS PROJECT; SUBSEQUENT SHEETS NEED NOT BE SIGNED."

DESIGN FIRM

hgm ASSOCIATES INC.
ENGINEERING ARCHITECTURE SURVEYING
council bluffs omaha

PROFESSIONAL ENGINEER
WILLIAM J. GLISMANN
E-6947
STATE OF NEBRASKA

6-09-26
HGM COA NE CA-0065

Designer	Project Manager
	WJG
Drafter	Date
	6-09-26

REVISION	BY/DATE

SHEET TITLE
C2.2
SITE PLAN - ALTERNATE

SHEET 14 OF 32

PROJECT TITLE
CONSTRUCT NEW PARKING LOT 3, B1000

Project Number
SGBP-24-0018

Drawing Number OFF-B-6524
Facility Number B1000

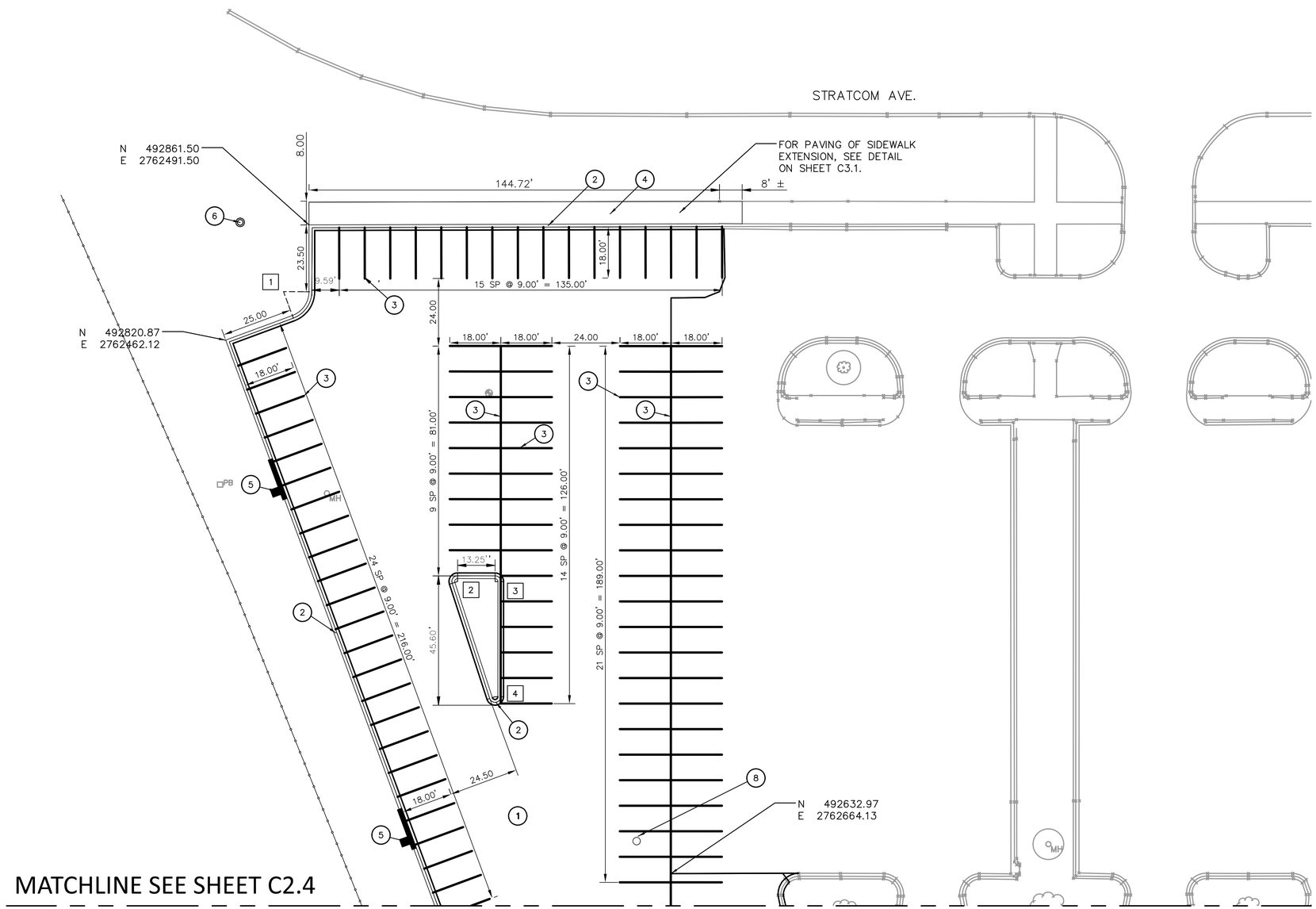

ENLARGED SITE PLAN AREA A – ALTERNATE

SCALE: 1" = 20'

CONSTRUCTION KEY NOTES

1. ASPHALTIC CONCRETE PAVEMENT
2. 6"CONCRETE CURB & GUTTER, SEE DETAIL ON SHEET C3.1
3. PAINT STRIPING (4" WIDE – WHITE)
4. 4" P.C. CONCRETE SIDEWALK
5. CURB INLET, SEE DRAINAGE PLAN ON SHEET C2.9
6. AREA INLET, SEE DRAINAGE PLAN ON SHEET C2.9
7. MANHOLE, SEE DRAINAGE PLAN ON SHEET C2.9
7. EXISTING INLET TO BE MODIFIED TO MANHOLE SEE SHEET C2.9

CURVE DATA

1	10' R.P. N 492837.99 E 2762482.50	3	2' R.P. N 492735.79 E 2762557.09
	P.C. N 492837.94 E 2762492.50		P.C. N 492737.79 E 2762557.10
	P.T. N 492828.61 E 2762485.96		P.T. N 492735.79 E 2762559.09
2	2' R.P. N 492735.80 E 2762543.85	4	2' R.P. N 492695.20 E 2762557.08
	P.C. N 492735.18 E 2762541.95		P.C. N 492695.20 E 2762559.08
	P.T. N 492737.80 E 2762543.85		P.T. N 492694.58 E 2762555.18

Offutt Air Force Base

APPROVED

SIGNATURE	OFFICE
BASE CIVIL ENGINEER	
CHIEF OF ENGINEERING	
CHIEF OF DESIGN	
PROJECT MANAGER	

COORDINATION

FIRE DEPARTMENT	
SAFTY	
FORCE PROTECTION	
ENVIRONMENTAL (CEA)	
COMMUNICATION	
USING AGENCY	

"SIGNING OF THE COVER SHEET CONSTITUTES COORDINATION OF ALL DRAWINGS IN THIS PROJECT; SUBSEQUENT SHEETS NEED NOT BE SIGNED."

DESIGN FIRM

hgm ASSOCIATES INC.
ENGINEERING ARCHITECTURE SURVEYING
council bluffs omaha

PROFESSIONAL ENGINEER WILLIAM J. GLISMANN E-6947 STATE OF NEBRASKA

6-09-26
HGM COA NE CA-0065

Designer	Project Manager WJG
Drafter	Date 6-09-26

REVISION	BY/DATE

SHEET TITLE
C1.3
ENLARGED SITE PLAN AREA A – ALTERNATE

SHEET 15 OF 32

PROJECT TITLE
CONSTRUCT NEW PARKING LOT 3, B1000

Project Number SGBP-24-0018

Drawing Number OFF-B-6524 Facility Number B1000

CONSTRUCTION KEY NOTES

1. ASPHALTIC CONCRETE PAVEMENT
2. 6"CONCRETE CURB & GUTTER, SEE DETAIL ON SHEET C3.1
3. PAINT STRIPING (4" WIDE – WHITE)
4. 4" P.C. CONCRETE SIDEWALK
5. CURB INLET, SEE DRAINAGE PLAN ON SHEET C2.9
6. AREA INLET, SEE DRAINAGE PLAN ON SHEET C2.9
7. MANHOLE, SEE DRAINAGE PLAN ON SHEET C2.9

CURVE DATA

5	4' R.P. N 492695.20 E 2762678.77	7	4' R.P. N 492581.77 E 2762822.44
	P.C. N 492581.77 E 2762674.77		P.C. N 492581.77 E 2762818.44
	P.T. N 492581.77 E 2762682.77		P.T. N 492581.77 E 2762826.44
6	4' R.P. N 492570.77 E 2762678.77	8	4' R.P. N 492570.77 E 2762822.44
	P.C. N 492570.77 E 2762682.77		P.C. N 492570.77 E 2762826.44
	P.T. N 492570.77 E 2762674.77		P.T. N 492570.77 E 2762818.44

9	4' R.P. N 492581.77 E 2762966.69
	P.C. N 492581.77 E 2762962.69
	P.T. N 492581.77 E 2762970.69
10	4' R.P. N 492570.77 E 2762966.69
	P.C. N 492570.77 E 2762970.69
	P.T. N 492570.77 E 2762962.69

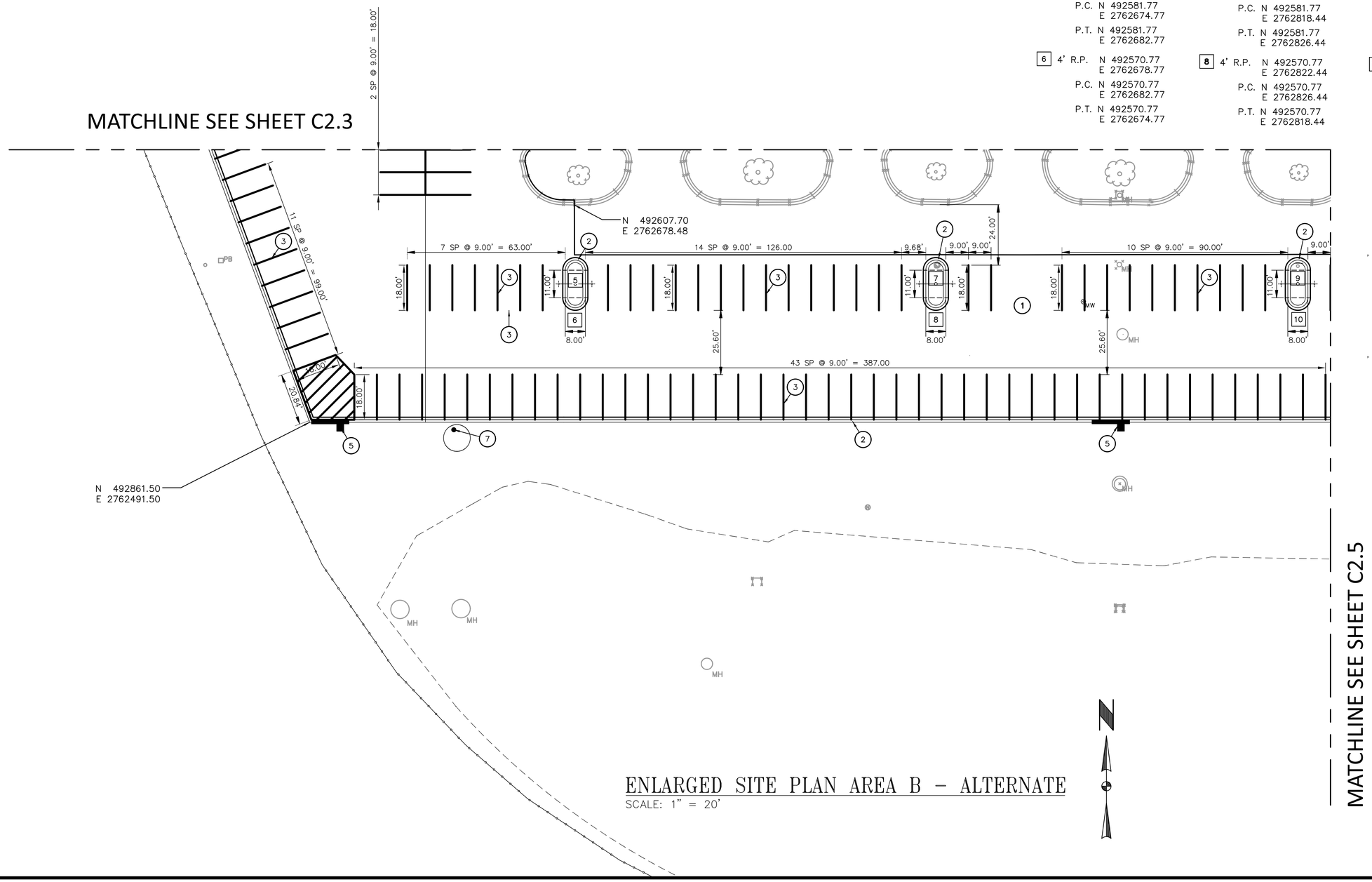

ENLARGED SITE PLAN AREA B – ALTERNATE

SCALE: 1" = 20'

Offutt Air Force Base

APPROVED

SIGNATURE	OFFICE
BASE CIVIL ENGINEER	
CHIEF OF ENGINEERING	
CHIEF OF DESIGN	
PROJECT MANAGER	

COORDINATION

FIRE DEPARTMENT	
SAFTY	
FORCE PROTECTION	
ENVIRONMENTAL (CEA)	
COMMUNICATION	
USING AGENCY	

"SIGNING OF THE COVER SHEET CONSTITUTES COORDINATION OF ALL DRAWINGS IN THIS PROJECT; SUBSEQUENT SHEETS NEED NOT BE SIGNED."

DESIGN FIRM

hgm ASSOCIATES INC.
ENGINEERING ARCHITECTURE SURVEYING
council bluffs omaha

WILLIAM J. GLISMANN E-6947 PROFESSIONAL ENGINEER STATE OF NEBRASKA

6-09-26
HGM COA NE CA-0065

Designer	Project Manager
	WJG
Drafter	Date
	6-09-26

REVISION	BY/DATE

SHEET TITLE
C2.4
ENLARGED SITE PLAN
AREA B – ALTERNATE

SHEET 16 OF 32

PROJECT TITLE
CONSTRUCT NEW PARKING LOT 3, B1000

Project Number
SGBP-24-0018

Drawing Number OFF-B-6524
Facility Number B1000

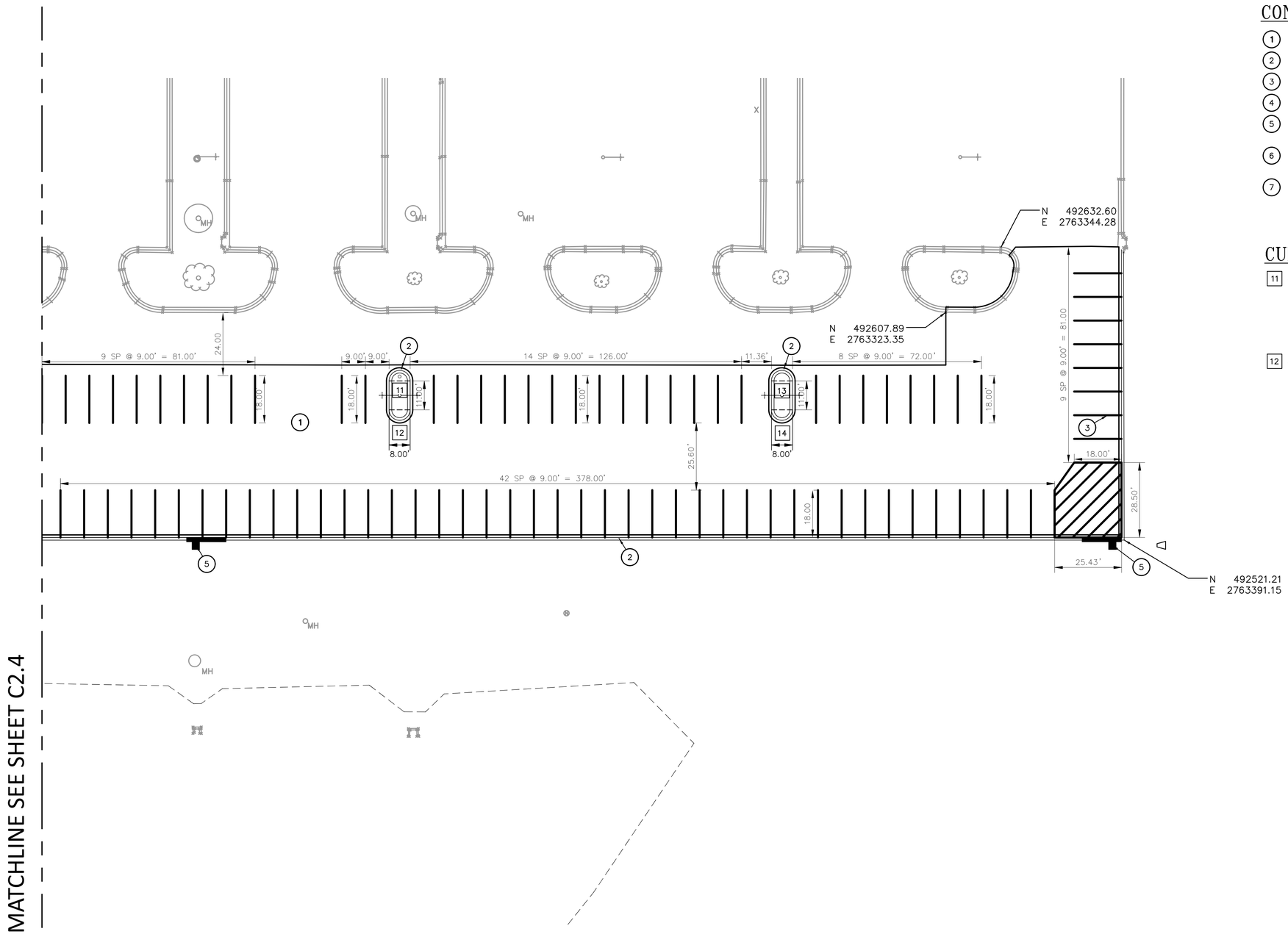

CONSTRUCTION KEY NOTES

1. ASPHALTIC CONCRETE PAVEMENT
2. 6"CONCRETE CURB & GUTTER, SEE DETAIL ON SHEET C3.1
3. PAINT STRIPING (4" WIDE – WHITE)
4. 4" P.C. CONCRETE SIDEWALK
5. CURB INLET, SEE DRAINAGE PLAN ON SHEET C2.9
6. AREA INLET, SEE DRAINAGE PLAN ON SHEET C2.9
7. MANHOLE, SEE DRAINAGE PLAN ON SHEET C2.9

CURVE DATA

11	4' R.P. N 492581.77 E 2763115.67	13	4' R.P. N 492581.77 E 2763261.03
	P.C. N 492581.77 E 2763111.67		P.C. N 492581.77 E 2763257.03
	P.T. N 492581.77 E 2763119.67		P.T. N 492581.77 E 2763265.03
12	4' R.P. N 492570.77 E 2763115.67	14	5' R.P. N 492570.77 E 2763261.03
	P.C. N 492570.77 E 2763119.67		P.C. N 492570.77 E 2763265.03
	P.T. N 492570.77 E 2763111.67		P.T. N 492570.77 E 2763257.03

ENLARGED SITE PLAN AREA C – ALTERNATE

SCALE: 1" = 20'

Offutt Air Force Base

APPROVED

SIGNATURE	OFFICE
BASE CIVIL ENGINEER	
CHIEF OF ENGINEERING	
CHIEF OF DESIGN	
PROJECT MANAGER	

COORDINATION

FIRE DEPARTMENT	
SAFTY	
FORCE PROTECTION	
ENVIRONMENTAL (CEA)	
COMMUNICATION	
USING AGENCY	

"SIGNING OF THE COVER SHEET CONSTITUTES COORDINATION OF ALL DRAWINGS IN THIS PROJECT; SUBSEQUENT SHEETS NEED NOT BE SIGNED."

DESIGN FIRM

hgm ASSOCIATES INC.
ENGINEERING ARCHITECTURE SURVEYING
council bluffs omaha

PROFESSIONAL ENGINEER WILLIAM J. GLISMANN E-6947 STATE OF NEBRASKA

6-09-26
HGM COA NE CA-0065

Designer	Project Manager WJG
Drafter	Date 6-09-26

REVISION	BY/DATE

SHEET TITLE
C2.5
ENLARGED SITE PLAN
AREA C – ALTERNATE

SHEET 17 OF 32

PROJECT TITLE
CONSTRUCT NEW PARKING LOT 3, B1000

Project Number SGBP-24-0018

Drawing Number OFF-B-6524 | Facility Number B1000

GRADING LEGEND

990.00 / 990.00T	PAVEMENT SLAB ELEVATION / TOP OF CURB ELEVATION
—990—	EXISTING CONTOUR
—990—	PROPOSED CONTOUR

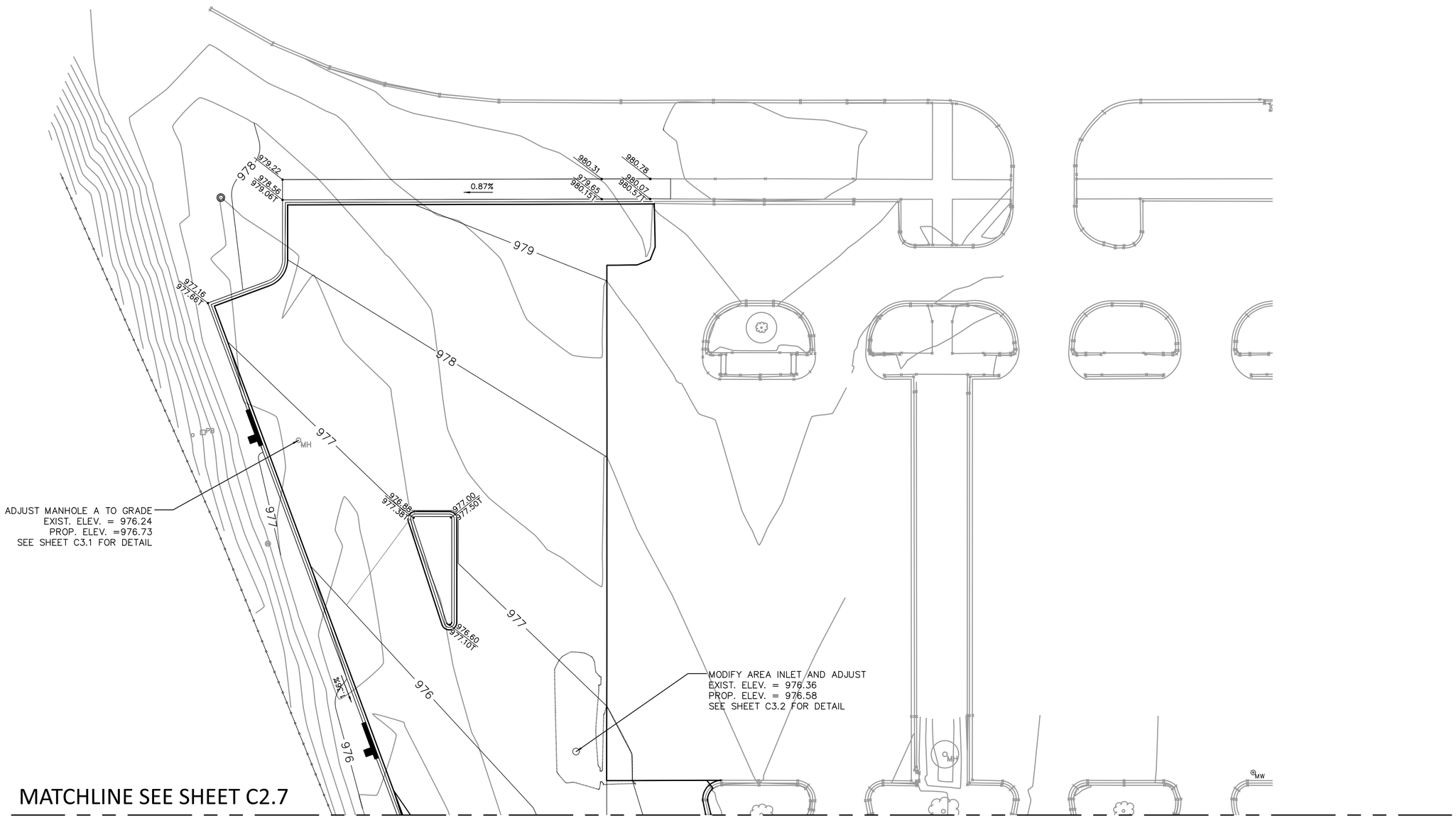

MATCHLINE SEE SHEET C2.7

N

GRADING PLAN AREA A – ALTERNATE

SCALE: 1" = 20'

Offutt
Air Force Base

APPROVED

SIGNATURE	OFFICE
BASE CIVIL ENGINEER	
CHIEF OF ENGINEERING	
CHIEF OF DESIGN	
PROJECT MANAGER	

COORDINATION

FIRE DEPARTMENT	
SAFTY	
FORCE PROTECTION	
ENVIRONMENTAL (CEA)	
COMMUNICATION	
USING AGENCY	

"SIGNING OF THE COVER SHEET CONSTITUTES COORDINATION OF ALL DRAWINGS IN THIS PROJECT; SUBSEQUENT SHEETS NEED NOT BE SIGNED."

DESIGN FIRM

hgm ASSOCIATES INC.
ENGINEERING ARCHITECTURE SURVEYING
council bluffs omaha

PROFESSIONAL ENGINEER
WILLIAM J. GLISMANN
E-6947
STATE OF NEBRASKA

6-09-26
HGM COA NE CA-0065

Designer	Project Manager
	WJG
Drafter	Date
	6-09-26

REVISION	BY/DATE

SHEET TITLE
C2.6
GRADING PLAN
AREA A – ALTERNATE

SHEET 18 OF 32

PROJECT TITLE
CONSTRUCT NEW
PARKING LOT 3, B1000

Project Number
SGBP-24-0018

Drawing Number OFF-B-6524
Facility Number B1000

GRADING LEGEND

990.00 / 990.00T	PAVEMENT SLAB ELEVATION / TOP OF CURB ELEVATION
—990—	EXISTING CONTOUR
—990—	PROPOSED CONTOUR

MATCHLINE SEE SHEET C2.6

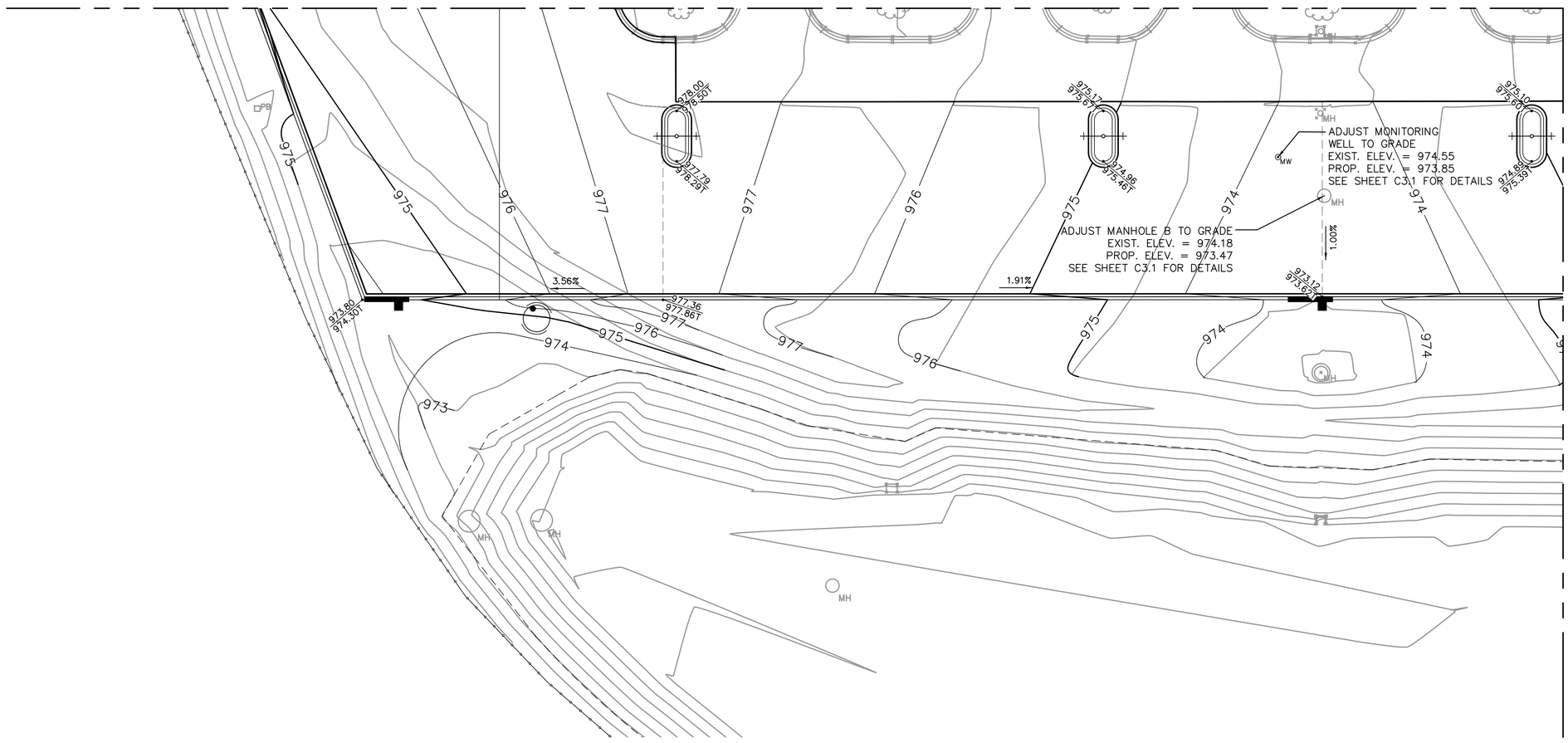

MATCHLINE SEE SHEET C2.8

GRADING PLAN AREA B – ALTERNATE

SCALE: 1" = 20'

N

Offutt
Air Force Base

APPROVED

SIGNATURE	OFFICE
BASE CIVIL ENGINEER	
CHIEF OF ENGINEERING	
CHIEF OF DESIGN	
PROJECT MANAGER	

COORDINATION

FIRE DEPARTMENT	
SAFTY	
FORCE PROTECTION	
ENVIRONMENTAL (CEA)	
COMMUNICATION	
USING AGENCY	

"SIGNING OF THE COVER SHEET CONSTITUTES COORDINATION OF ALL DRAWINGS IN THIS PROJECT; SUBSEQUENT SHEETS NEED NOT BE SIGNED."

DESIGN FIRM

hgm ASSOCIATES INC.
ENGINEERING ARCHITECTURE SURVEYING
council bluffs omaha

WILLIAM J. GLISMANN
E-6947
PROFESSIONAL ENGINEER
STATE OF NEBRASKA

6-09-26
HGM COA NE CA-0065

Designer	Project Manager
	WJG
Drafter	Date
	6-09-26

REVISION	BY/DATE

SHEET TITLE
C2.7
GRADING PLAN
AREA B – ALTERNATE

SHEET 19 OF 32

PROJECT TITLE
CONSTRUCT NEW
PARKING LOT 3, B1000

Project Number
SGBP-24-0018

Drawing Number OFF-B-6524
Facility Number B1000

GRADING LEGEND

990.00 / 990.00T	PAVEMENT SLAB ELEVATION / TOP OF CURB ELEVATION
—990—	EXISTING CONTOUR
—990—	PROPOSED CONTOUR

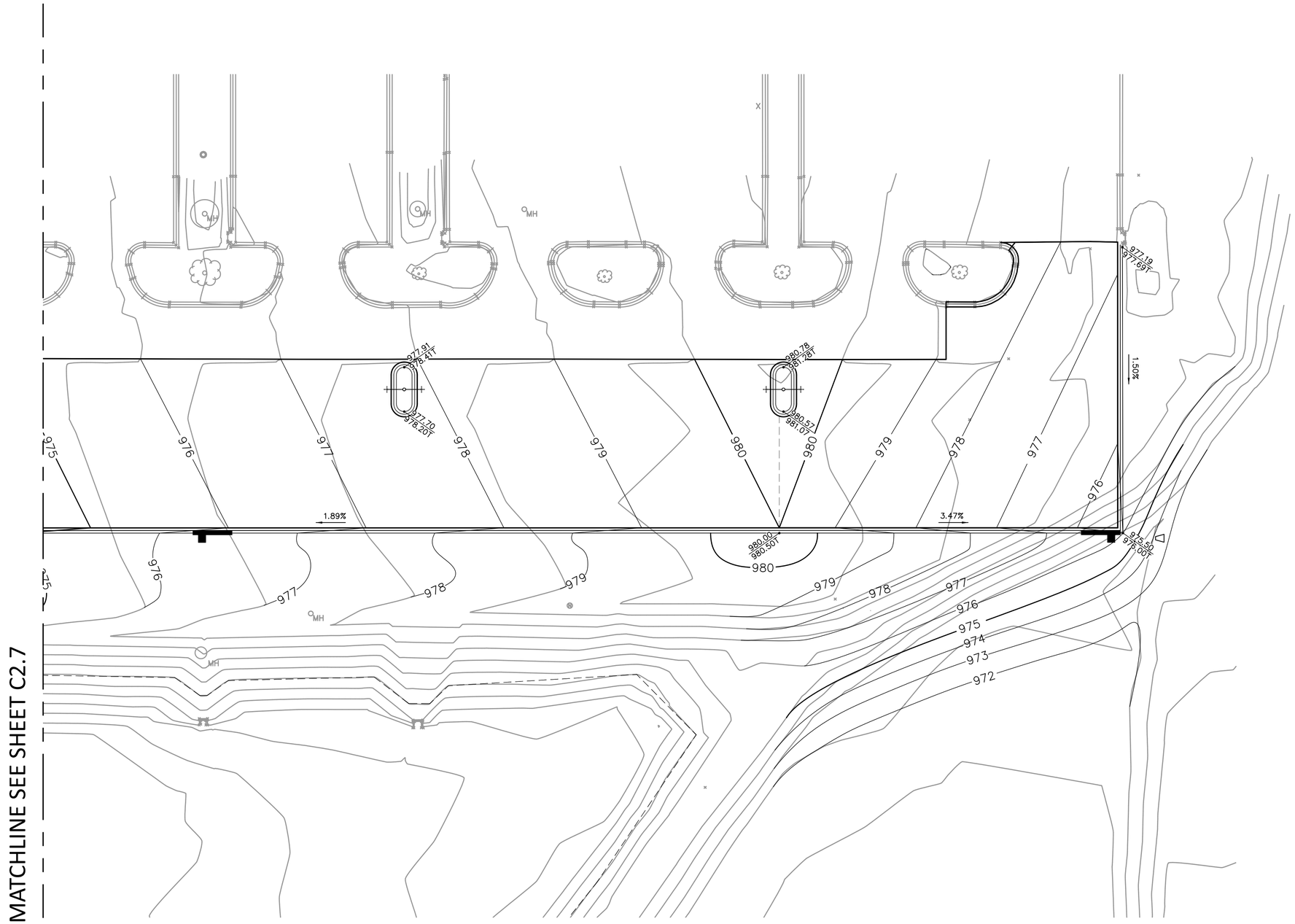

GRADING PLAN AREA C – ALTERNATE

SCALE: 1" = 20'

Offutt
Air Force Base

APPROVED

SIGNATURE	OFFICE
BASE CIVIL ENGINEER	
CHIEF OF ENGINEERING	
CHIEF OF DESIGN	
PROJECT MANAGER	

COORDINATION

FIRE DEPARTMENT	
SAFTY	
FORCE PROTECTION	
ENVIRONMENTAL (CEA)	
COMMUNICATION	
USING AGENCY	

"SIGNING OF THE COVER SHEET CONSTITUTES COORDINATION OF ALL DRAWINGS IN THIS PROJECT; SUBSEQUENT SHEETS NEED NOT BE SIGNED."

DESIGN FIRM

hgm ASSOCIATES INC.
ENGINEERING ARCHITECTURE SURVEYING
council bluffs omaha

PROFESSIONAL ENGINEER
WILLIAM J. GLISMANN
E-6947
STATE OF NEBRASKA

6-09-26
HGM COA NE CA-0065

Designer	Project Manager
	WJG
Drafter	Date
	6-09-26

REVISION	BY/DATE

SHEET TITLE
C2.8
GRADING PLAN
AREA C – ALTERNATE

SHEET 20 OF 32

PROJECT TITLE
CONSTRUCT NEW
PARKING LOT 3, B1000

Project Number
SGBP-24-0018

Drawing Number	Facility Number
OFF-B-6524	B1000

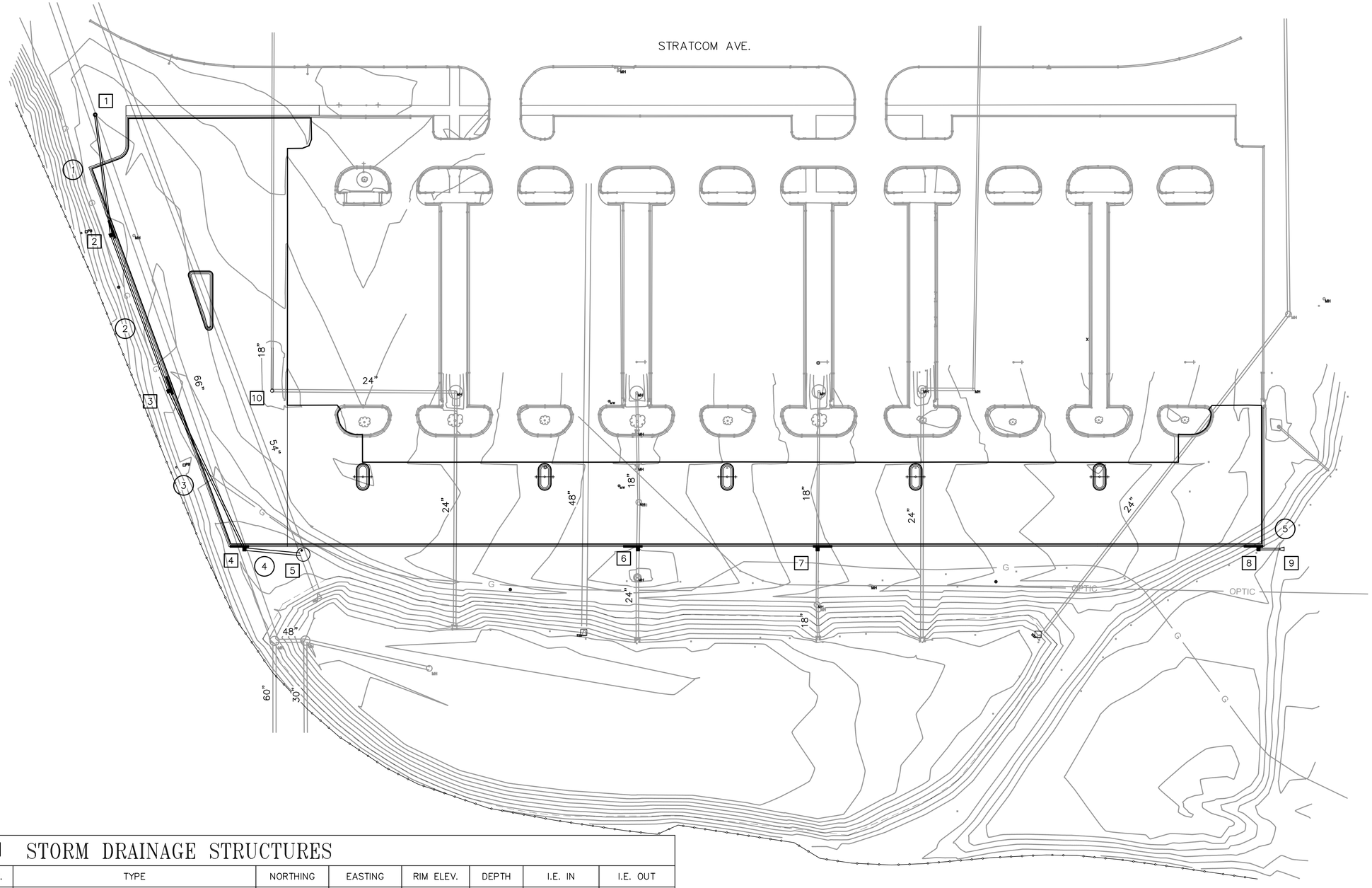

STORM DRAINAGE STRUCTURES

NO.	TYPE	NORTHING	EASTING	RIM ELEV.	DEPTH	I.E. IN	I.E. OUT
1	AREA INLET SEE DETAIL SHEET C3.5	492862.36	2762467.22	978.14	6.14'	–	972.00
2	CURB INLET SEE DETAIL SHEET C3.3	492767.30	2762479.80	977.07	6.50'	–	970.57
3	CURB INLET SEE DETAIL SHEET C3.3	492644.06	276525.36	975.69	7.00'	–	968.69
4	CURB INLET SEE DETAIL SHEET C3.3	492519.16	2762585.12	974.74	8.25'	–	966.49
5	108" DIAMETER MANHOLE SEE DETAIL SHEET C3.2	492514.89	2762631.60	975.97	11.00'	965.76	965.68
6	CURB INLET SEE DETAIL SHEET C3.3	492519.18	2762896.16	973.62	6.00'	–	967.62
7	CURB INLET SEE DETAIL SHEET C3.3	492519.19	2763038.17	976.31	6.80'	–	969.39
8	CURB INLET SEE DETAIL SHEET C3.3	492519.21	2763386.65	976.15	3.90'	–	972.25
9	FLARED END SECTION SEE DETAIL SHEET C3.2	492519.88	2763403.68	–	–	–	972.00
10	MODIFY 30" DIAMETER NYLOPLAST INLET WITH NEW MANHOLE COVER WITH RISER, SEE DETAIL SHEET C3.2	492519.88	2763403.68	976.58	–	–	–

DRAINAGE PLAN – ALTERNATE

SCALE: 1" = 40'

STORMWATER DRAINAGE PIPE

NO.	SIZE	LENGTH	MATERIAL	SLOPE	REMARKS
1	15"	96'	RCP	1.49%	AREA INLET 1 TO CURB INLET 2
2	15"	132'	RCP	1.43%	CURB INLET 2 TO CURB INLET 3
3	18"	139'	RCP	1.59%	CURB INLET 3 TO CURB INLET 4
4	24"	47'	RCP	1.65%	CURB INLET 4 TO MANHOLE 5
5	15"	17'	RCP	1.47%	CURB INLET 8 TO FLARED END SECTION 9

Offutt
Air Force Base

APPROVED

SIGNATURE	OFFICE
BASE CIVIL ENGINEER	
CHIEF OF ENGINEERING	
CHIEF OF DESIGN	
PROJECT MANAGER	

COORDINATION

FIRE DEPARTMENT	
SAFTY	
FORCE PROTECTION	
ENVIRONMENTAL (CEA)	
COMMUNICATION	
USING AGENCY	

"SIGNING OF THE COVER SHEET CONSTITUTES COORDINATION OF ALL DRAWINGS IN THIS PROJECT; SUBSEQUENT SHEETS NEED NOT BE SIGNED."

DESIGN FIRM

hgm ASSOCIATES INC.
ENGINEERING ARCHITECTURE SURVEYING
council bluffs omaha

WILLIAM J. GLISMANN
E-6947
PROFESSIONAL ENGINEER
STATE OF NEBRASKA

6-09-26
HGM COA NE CA-0065

Designer	Project Manager
	WJG
Drafter	Date
	6-09-26

REVISION	BY/DATE

SHEET TITLE
C2.9
DRAINAGE PLAN – ALTERNATE

SHEET 21 OF 32

PROJECT TITLE
CONSTRUCT NEW PARKING LOT 3, B1000

Project Number
SGBP-24-0018

Drawing Number OFF-B-6524
Facility Number B1000

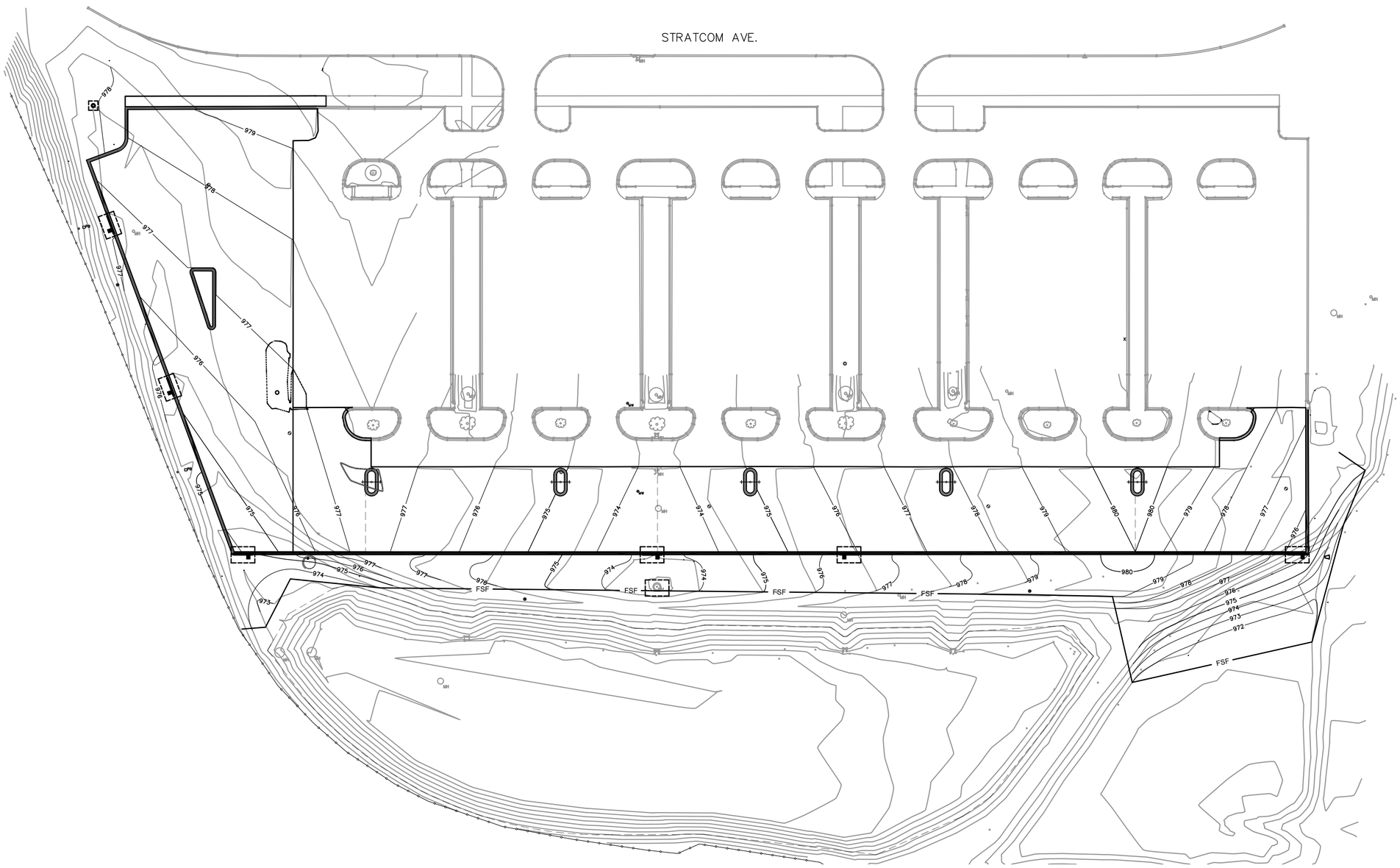

EROSION CONTROL PLAN – ALTERNATE

SCALE: 1" = 40'

EROSION CONTROL NOTES

1. EROSION CONTROL MEASURES SHALL NOT BE REMOVED WITHOUT INSPECTOR AND APPLICABLE GOVERNMENT APPROVAL.

LEGEND

FSF — CONSTRUCT SILT FENCE

INLET SEDIMENT FILTER

Offutt
Air Force Base

APPROVED

SIGNATURE	OFFICE
BASE CIVIL ENGINEER	
CHIEF OF ENGINEERING	
CHIEF OF DESIGN	
PROJECT MANAGER	

COORDINATION

FIRE DEPARTMENT	
SAFTY	
FORCE PROTECTION	
ENVIRONMENTAL (CEA)	
COMMUNICATION	
USING AGENCY	

"SIGNING OF THE COVER SHEET CONSTITUTES COORDINATION OF ALL DRAWINGS IN THIS PROJECT; SUBSEQUENT SHEETS NEED NOT BE SIGNED."

DESIGN FIRM

hgm ASSOCIATES INC.
ENGINEERING ARCHITECTURE SURVEYING
council bluffs omaha

PROFESSIONAL ENGINEER
WILLIAM J. GLISMANN
E-6947
STATE OF NEBRASKA

6-09-26
HGM COA NE CA-0065

Designer	Project Manager
	WJG
Drafter	Date
	6-09-26

REVISION	BY/DATE

SHEET TITLE
C2.10
EROSION CONTROL PLAN – ALTERNATE

SHEET 22 OF 32

PROJECT TITLE
CONSTRUCT NEW PARKING LOT 3, B1000

Project Number
SGBP-24-0018

Drawing Number OFF-B-6524
Facility Number B1000

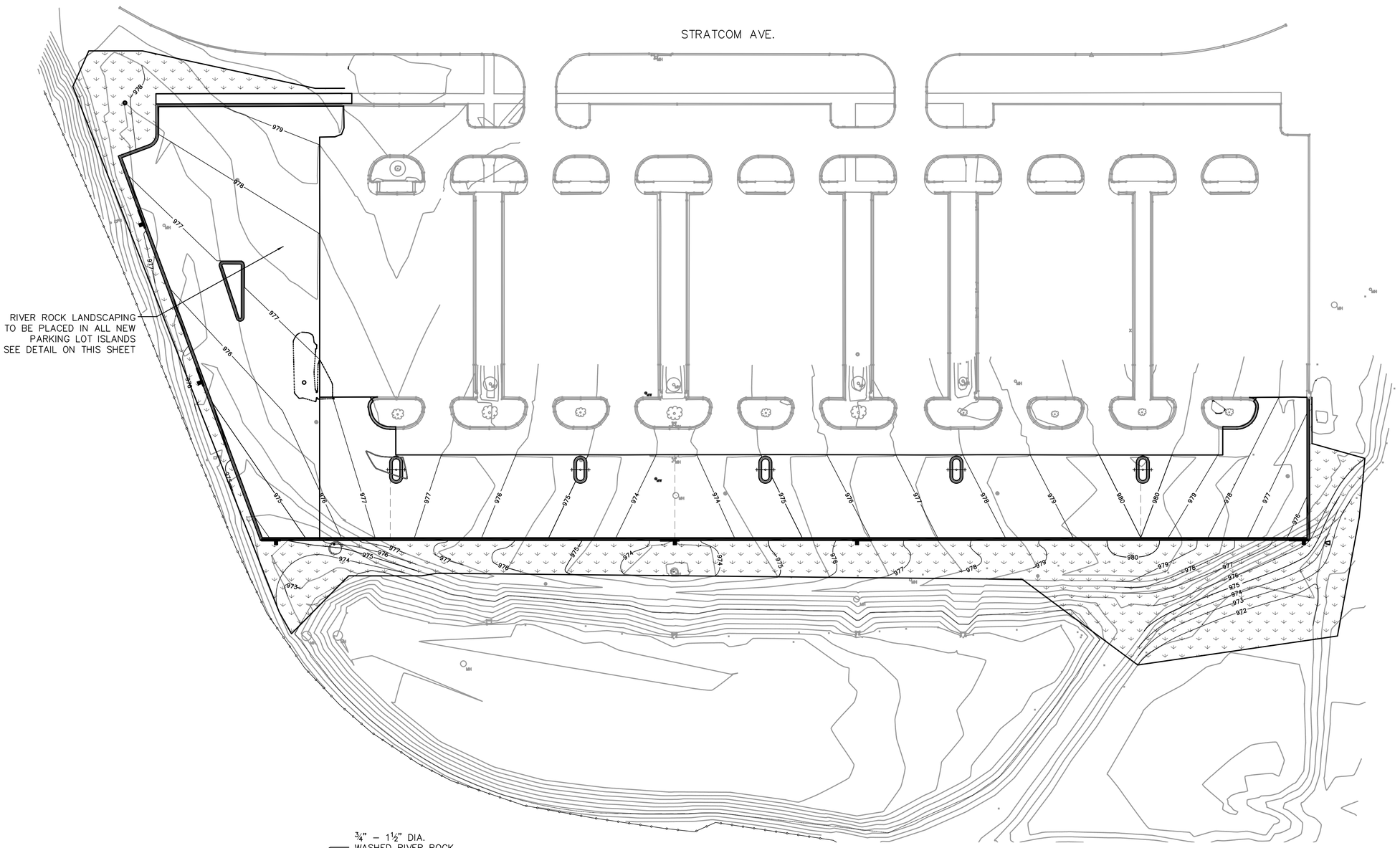

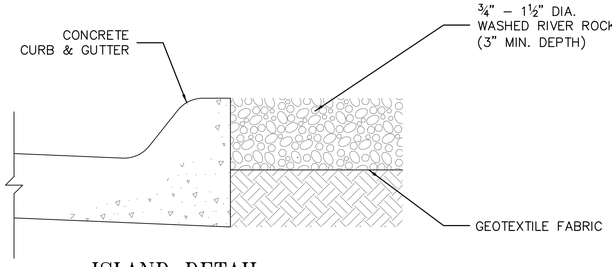

ISLAND DETAIL

NO SCALE

PERMANENT STABILIZATION PLAN – ALTERNATE

SCALE: 1" = 40'

NOTES

1. ALL AREAS DISTURBED BY CONSTRUCTION AND GRADING OPERATIONS SHALL BE SEEDED.
2. CONTRACTOR TO PROVIDE SAMPLE OF WASHED RIVER ROCK TO GOVERNMENT FOR APPROVAL.
3. GEOTEXTILE FABRIC SHALL BE MIAFI 140N AS MANUFACTURED BY SOLMAX OR APPROVED EQUAL.

LEGEND

SEEDING WITH EROSION CONTROL BLANKET

Offutt
Air Force Base

APPROVED

SIGNATURE	OFFICE
BASE CIVIL ENGINEER	
CHIEF OF ENGINEERING	
CHIEF OF DESIGN	
PROJECT MANAGER	

COORDINATION

FIRE DEPARTMENT	
SAFTY	
FORCE PROTECTION	
ENVIRONMENTAL (CEA)	
COMMUNICATION	
USING AGENCY	

"SIGNING OF THE COVER SHEET CONSTITUTES COORDINATION OF ALL DRAWINGS IN THIS PROJECT; SUBSEQUENT SHEETS NEED NOT BE SIGNED."

DESIGN FIRM

hgm ASSOCIATES INC.
ENGINEERING ARCHITECTURE SURVEYING
council bluffs omaha

PROFESSIONAL ENGINEER WILLIAM J. GLISMANN E-6947 STATE OF NEBRASKA

6-09-26
HGM COA NE CA-0065

Designer	Project Manager
	WJG
Drafter	Date
	6-09-26

REVISION	BY/DATE

SHEET TITLE
C2.11
PERMANENT STABILIZATION PLAN – ALTERNATE

SHEET 23 OF 32

PROJECT TITLE
CONSTRUCT NEW PARKING LOT 3, B1000

Project Number
SGBP-24-0018

Drawing Number OFF-B-6524
Facility Number B1000

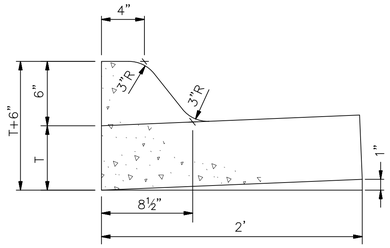

6" CURB & GUTTER DETAIL
NO SCALE

T = PAVEMENT THICKNESS

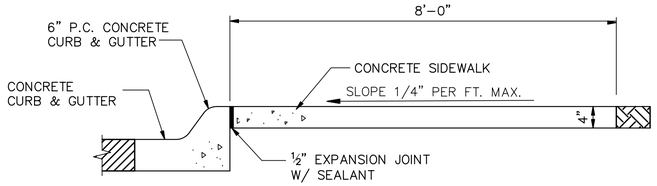

SIDEWALK/CURB DETAIL
NO SCALE

SIDEWALK JOINT SPACING		
WALK WIDTH	DUMMY JOINT SPACING	
	TRANSVERSE	LONGITUDINAL
6' TO 8'	4'	IN CENTER OF WALK

NOTE: PROVIDE 1/2" PREMOULDED EXPANSION JOINTS AT ALL LOCATIONS WHERE NEW WALKS ABUT CONC. CURB AND GUTTER, BUILDINGS AND RETAINING WALLS OR OTHER STRUCTURES.

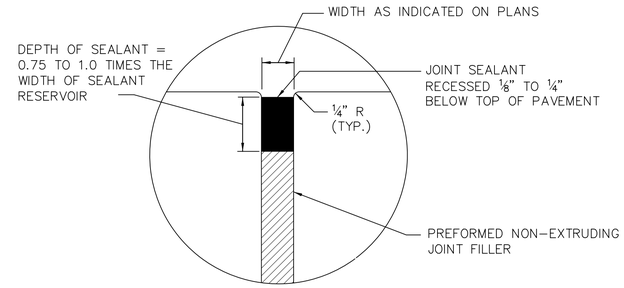

EXPANSION JOINT SEALANT DETAIL
NO SCALE

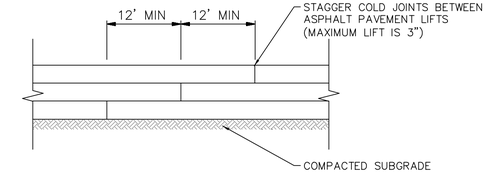

ASPHALT COLD JOINT DETAIL
NO SCALE

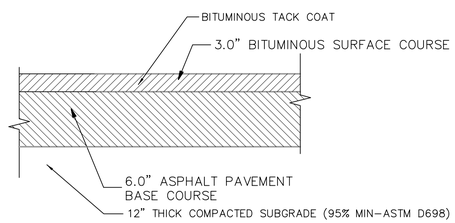

TYPICAL ASPHALT SECTION
NO SCALE

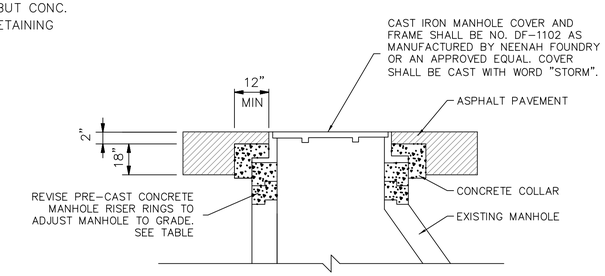

MANHOLE	HEIGHT ADJUSTMENT
A	RAISE 0.49'
B	LOWER 0.71'

STORM MANHOLE ADJUSTMENT DETAIL
NO SCALE

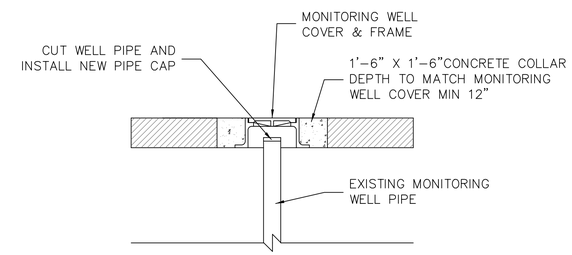

MONITORING WELL ADJUSTMENT DETAIL
NO SCALE

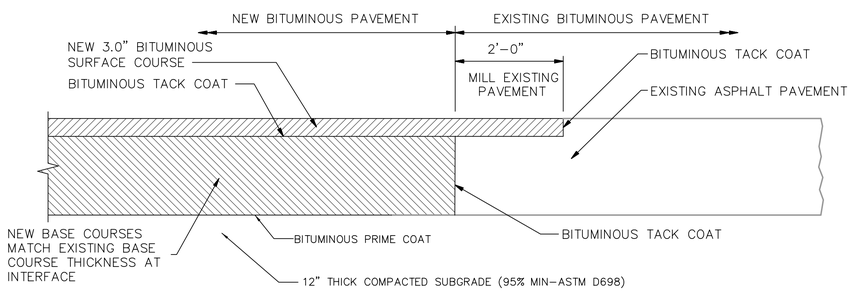

ASPHALT TO EXISTING ASPHALT INTERFACE DETAIL
NO SCALE

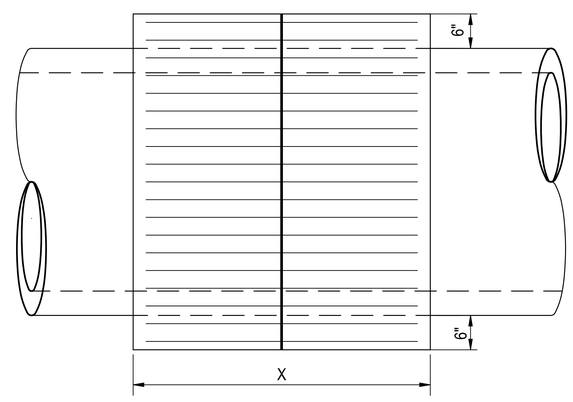

UP TO 30" PIPE X=1'-6"
30" THRU 54" PIPE X=2'-0"
54" AND LARGER PIPE X=3'-0"

ELEVATION VIEW

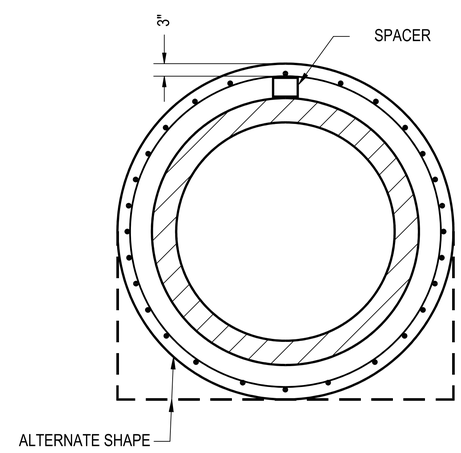

CONCRETE COLLAR TO BE 6" THICK. REINFORCING WITH 6" X 6", 6/6 WIRE MESH WRAPPED COMPLETELY AROUND THE PIPE AND SUPPORTED WITH APPROVED SPACER.
CONCRETE SHALL BE OPW-4000.

SECTION VIEW

CONCRETE COLLAR DETAIL
NO SCALE

Offutt Air Force Base

APPROVED

SIGNATURE	OFFICE
BASE CIVIL ENGINEER	
CHIEF OF ENGINEERING	
CHIEF OF DESIGN	
PROJECT MANAGER	

COORDINATION

FIRE DEPARTMENT	
SAFTY	
FORCE PROTECTION	
ENVIRONMENTAL (CEA)	
COMMUNICATION	
USING AGENCY	

"SIGNING OF THE COVER SHEET CONSTITUTES COORDINATION OF ALL DRAWINGS IN THIS PROJECT; SUBSEQUENT SHEETS NEED NOT BE SIGNED."

DESIGN FIRM

hgm ASSOCIATES INC.
ENGINEERING ARCHITECTURE SURVEYING
council bluffs omaha

PROFESSIONAL ENGINEER WILLIAM J. GLISMANN E-6947 STATE OF NEBRASKA
6-09-26
HGM COA NE CA-0065

Designer	Project Manager WJG
Drafter	Date 6-09-26

REVISION	BY/DATE

SHEET TITLE
C3.1
PAVEMENT DETAILS

SHEET 24 OF 32

PROJECT TITLE
CONSTRUCT NEW PARKING LOT 3, B1000

Project Number SGBP-24-0018

Drawing Number OFF-B-6524 Facility Number B1000

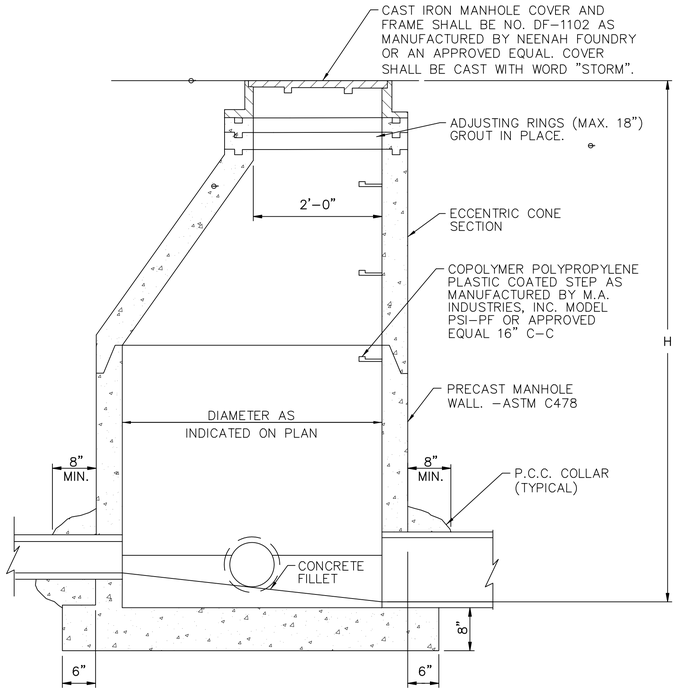

STORM DRAINAGE MANHOLE

NO SCALE

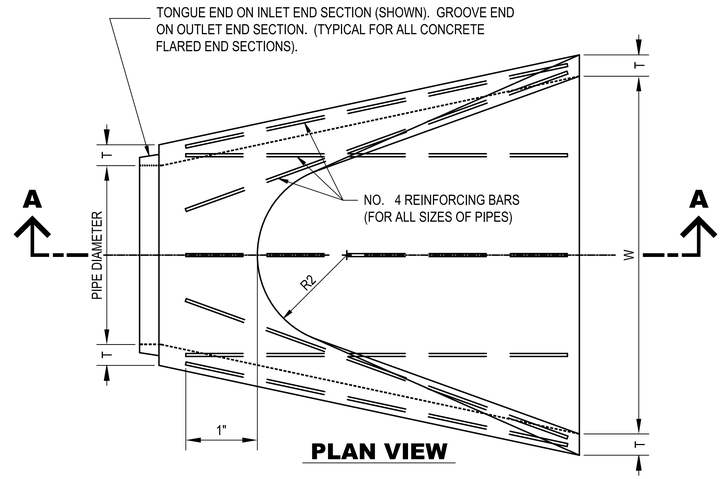

PLAN VIEW

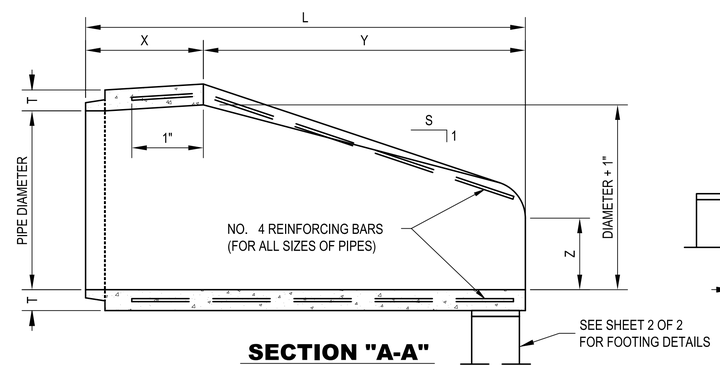

SECTION "A-A"

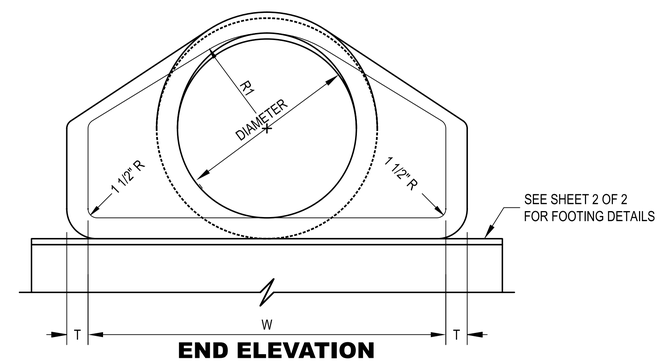

END ELEVATION

FLARED END SECTION DETAILS

NO SCALE

FLARED END SECTIONS (NOMINAL DIMENSIONS)									
PIPE DIAMETER	L ± 6"	Y	X ± 4 1/2"	Z	W ± 2"	R1	R2	S APPROX.	T MIN.
12"	6'-0 7/8"	2'-0"	4'-0 7/8"	4"	2'-6"	1'-0 1/8"	9"	3	2"
15"	6'-1"	2'-3"	3'-10"	6"	2'-6"	1'-0 1/2"	11"	3	2 1/4"
18"	6'-1"	2'-3"	3'-10"	9"	3'-0"	1'-3 1/2"	1'-0"	3	2 1/2"
24"	6'-1 1/2"	3'-7 1/2"	2'-6"	9 1/2"	4'-0"	1'-4 13/16"	1'-2"	3	3"
30"	6'-1 3/4"	4'-6"	1'-7 3/4"	1'-0"	5'-0"	1'-6 1/2"	1'-3"	3	3 1/2"
36"	8'-1 3/4"	5'-3"	2'-10 3/4"	1'-3"	6'-0"	2'-0 5/16"	1'-8"	3	4"
42"	8'-2"	5'-3"	2'-11"	1'-9"	6'-6"	2'-3 1/2"	1'-10"	3	4 1/2"
48"	8'-2"	6'-0"	2'-2"	2'-0"	7'-0"	2'-4 1/2"	1'-10"	3	5"
54"	8'-4"	5'-5"	2'-11"	2'-3"	7'-6"	2'-9 1/8"	2'-0"	2.4	5 1/2"
60"	8'-3"	5'-0"	3'-3"	2'-6"	8'-0"	3'-0 11/16"	2'-0"	2	6"
66"	8'-3"	6'-6"	1'-9"	2'-6"	9'-0"	3'-0 1/8"	2'-0"	2	6 1/2"
72"	8'-3"	6'-6"	1'-9"	2'-6"	9'-0"	3'-2 15/16"	2'-0"	2	7"

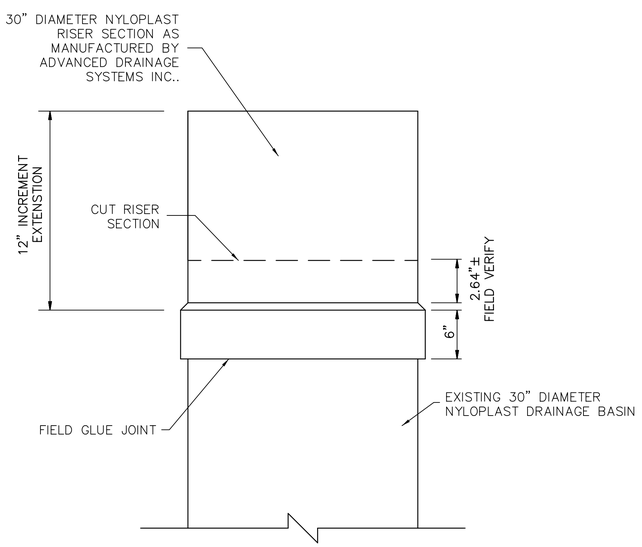

NYLOPLAST RISER SECTION

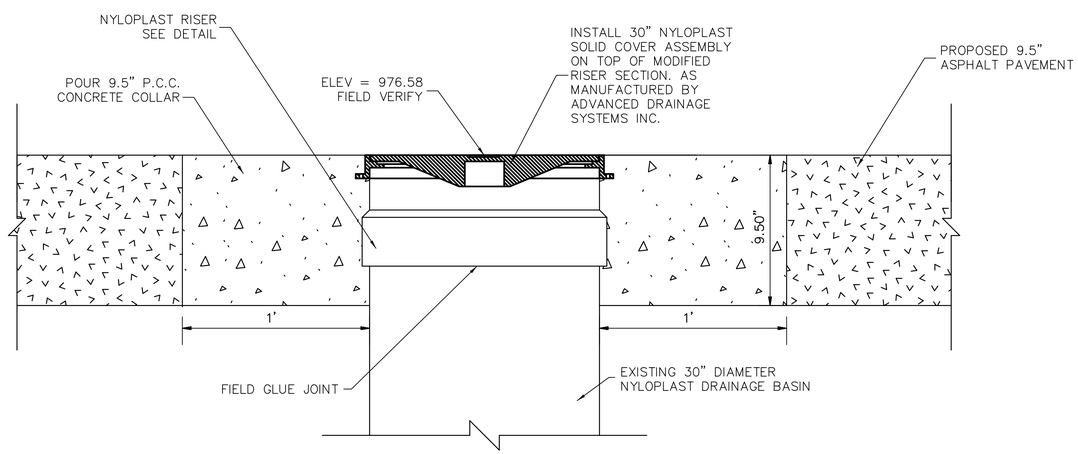

NYLOPLAST SOLID COVER ASSEMBLY INSTALLATION

AREA INLET MODIFICATION DETAIL

NO SCALE

Offutt Air Force Base

APPROVED

SIGNATURE	OFFICE
BASE CIVIL ENGINEER	
CHIEF OF ENGINEERING	
CHIEF OF DESIGN	
PROJECT MANAGER	

COORDINATION

FIRE DEPARTMENT	
SAFTY	
FORCE PROTECTION	
ENVIRONMENTAL (CEA)	
COMMUNICATION	
USING AGENCY	

"SIGNING OF THE COVER SHEET CONSTITUTES COORDINATION OF ALL DRAWINGS IN THIS PROJECT; SUBSEQUENT SHEETS NEED NOT BE SIGNED."

DESIGN FIRM

hgm ASSOCIATES INC.
ENGINEERING ARCHITECTURE SURVEYING
council bluffs omaha

WILLIAM J. GLISMANN
E-6947
PROFESSIONAL ENGINEER
STATE OF NEBRASKA

6-09-26
HGM COA NE CA-0065

Designer	Project Manager WJG
Drafter	Date 6-09-26

REVISION	BY/DATE

SHEET TITLE
C3.2
STORM DRAINAGE DETAILS

SHEET 25 OF 32

PROJECT TITLE
CONSTRUCT NEW PARKING LOT 3, B1000

Project Number SGBP-24-0018

Drawing Number OFF-B-6524 | Facility Number B1000

CURB INLET DATA w/7" PAVEMENT

DIA. OF PIPE	DIMENSIONS X MIN.	DIMENSIONS D	CONCRETE CU. YDS.	CONCRETE CU. YDS. DEDUCT FOR EACH PIPE OPENING
12"	3'-8"	1'-10"	3.481	.034
15"	4'-0"	1'-10"	3.608	.051
18"	4'-3"	1'-10"	3.704	.071

* SEE NOTE 6 FOR "X" DIMENSIONS AND ADD 0.383 CU. YDS. CONCRETE FOR ONE FOOT INCREASE OF "X"

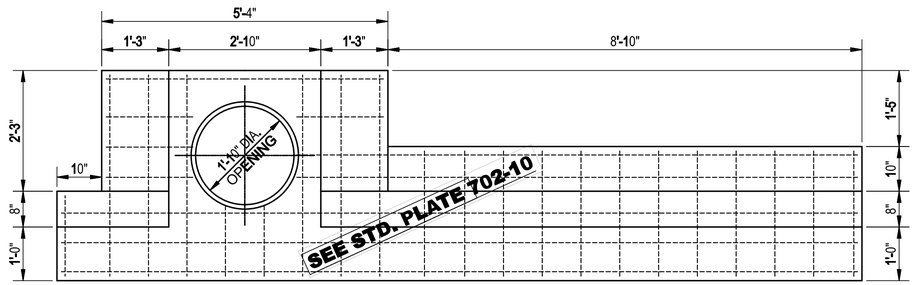

REINFORCED CONCRETE COVER

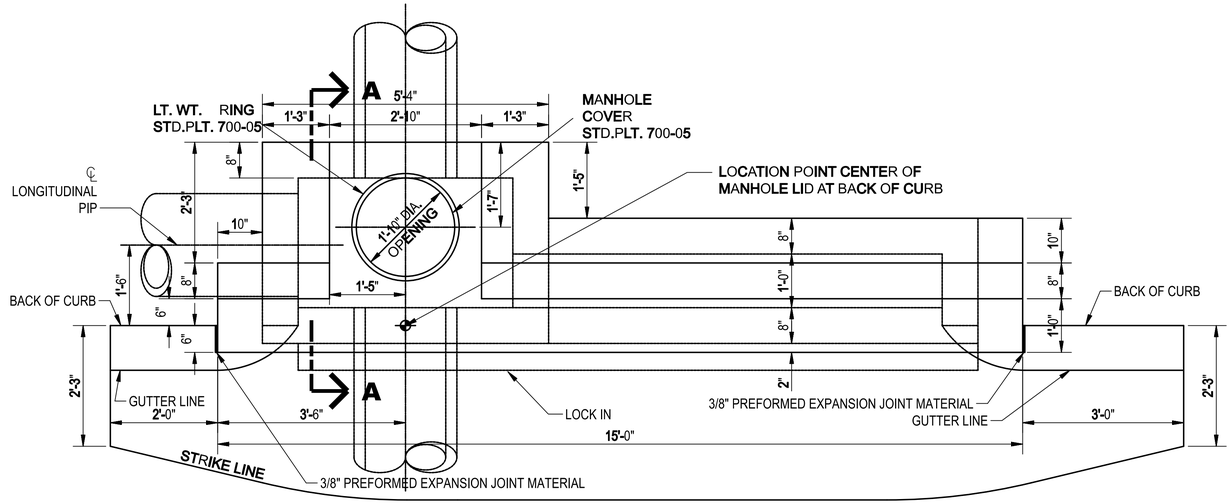

PLAN VIEW

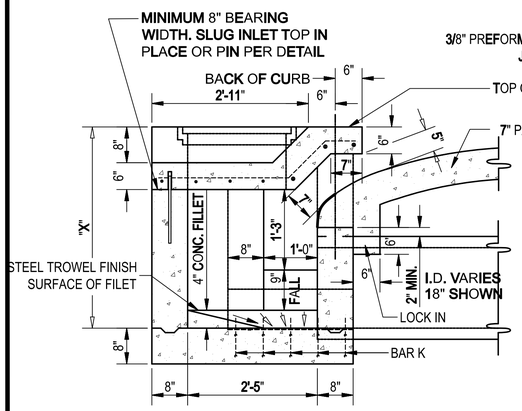

SECTION "A-A"

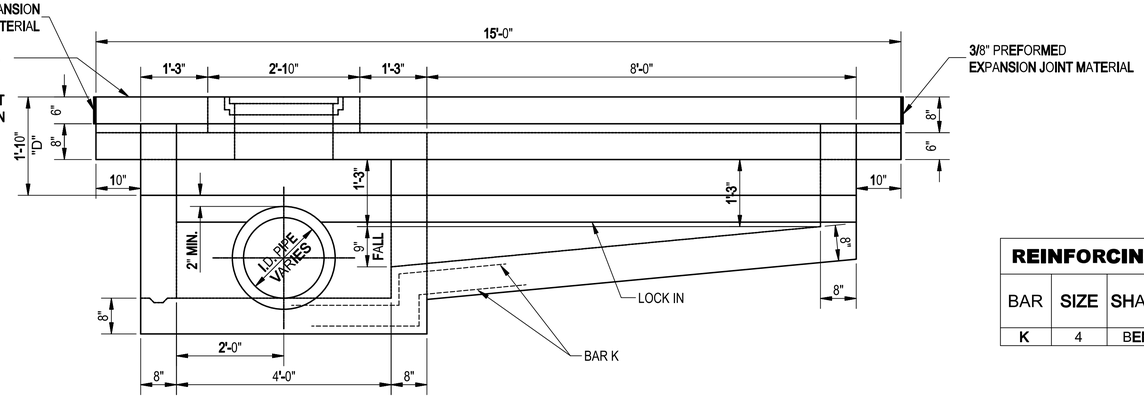

FRONT ELEVATION

NOTES

1. INLET DESIGN FOR OUTLET THROUGH FRONT, BACK OR END WALL. FOR OTHER LAYOUTS SEE SHEETS 2 AND 3.
2. ALL CONCRETE SHALL BE OPW-4000.
3. ALL EXPOSED EDGES OF CONCRETE SHALL BE CHAMFERED.
4. THE CONCRETE COVER MAY BE CAST IN PLACE OR PRECAST, WITH LT. WT. RING AND COVER (STD. PLT. 700-05).
5. REINFORCING STEEL SHALL BE DEFORMED BARS IN ACCORDANCE WITH ASTM A615 GRADE 60; AND EPOXY COATED IN ACCORDANCE WITH ASTM A775. THE COVERING, MEASURED FROM THE FACE OF CONCRETE TO THE SURFACE OF ANY REINFORCING BAR SHALL BE 1 1/2 INCHES.
6. "D" AND "X" ARE DESIGNED FOR INLET USE WITH 7" THICK PAVEMENT. INCREASE "D" AND "X" 1" FOR EVERY 1" INCREASE OF PAVEMENT AND BASE COURSE THICKNESS.
7. FOR INLET BLOCKOUT DETAILS SEE SHEET 5.
8. CONTRACTOR SHALL USE A GUTTER DEPRESSION TEMPLATE TO ASSURE PROPER INLET OPENING. CONTRACTOR SHALL FURNISH A TEMPLATE AS PER DETAIL SHEET 5, OR ONE AS APPROVED BY THE ENGINEER.

REINFORCING BAR BENDING DIAGRAM FOR CURB INLET

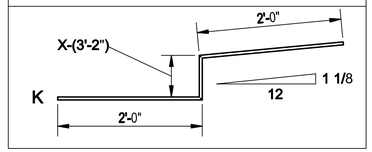

9. CURB INLET STRUCTURES MORE THAN 7 FEET IN DEPTH SHALL BE DESIGNED BY A LICENSED PROFESSIONAL ENGINEER.
10. REINFORCING SHALL BE PLACED WITH A TOLERANCE OF -1/4" AND +1/2" ON CLEARANCE.
11. INLETS SERVING LARGER PIPE SIZES WILL BE DESIGNED BY THE ENGINEER.

REINFORCING BAR SCHEDULE

BAR	SIZE	SHAPE	QUANT.	LENGTH
K	4	BENT	10	VARIES

702-09 CURB INLETS

TYPE 1 WITH TRANSVERSE PIPE

Offutt Air Force Base

APPROVED

SIGNATURE	OFFICE
BASE CIVIL ENGINEER	
CHIEF OF ENGINEERING	
CHIEF OF DESIGN	
PROJECT MANAGER	

COORDINATION

FIRE DEPARTMENT	
SAFTY	
FORCE PROTECTION	
ENVIRONMENTAL (CEA)	
COMMUNICATION	
USING AGENCY	

"SIGNING OF THE COVER SHEET CONSTITUTES COORDINATION OF ALL DRAWINGS IN THIS PROJECT; SUBSEQUENT SHEETS NEED NOT BE SIGNED."

DESIGN FIRM

hgm ASSOCIATES INC.
ENGINEERING ARCHITECTURE SURVEYING
council bluffs omaha

WILLIAM J. GLISMANN
E-6947
PROFESSIONAL ENGINEER
STATE OF NEBRASKA

6-09-26
HGM COA NE CA-0065

Designer	Project Manager
	WJG
Drafter	Date
	6-09-26

REVISION	BY/DATE

SHEET TITLE
C3.3
STORM SEWER DETAILS

SHEET 26 OF 32

PROJECT TITLE
CONSTRUCT NEW PARKING LOT 3, B1000

Project Number
SGBP-24-0018

Drawing Number OFF-B-6524
Facility Number B1000

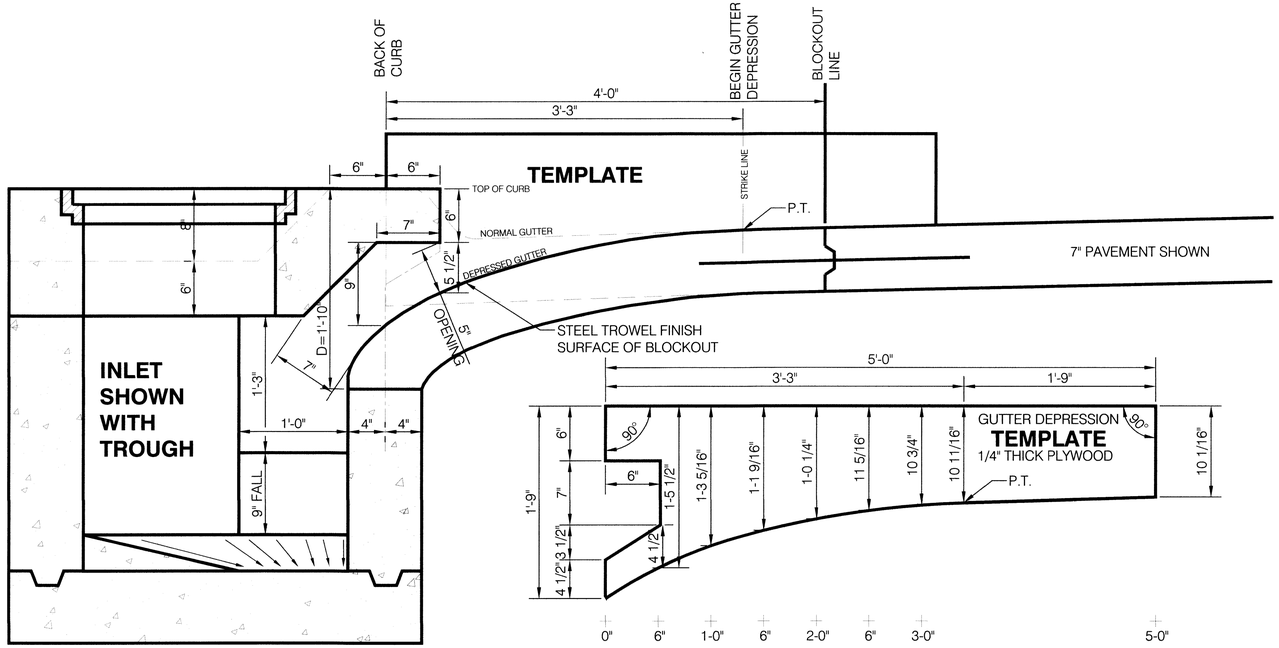

DEPRESSION TEMPLATE DETAILS

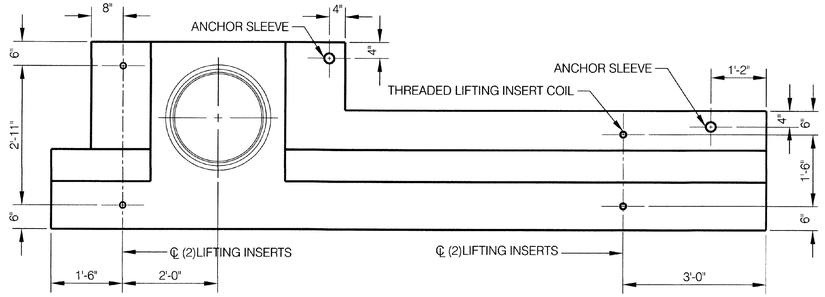

LIFT POINT-ANCHOR SLEEVE LOCATIONS

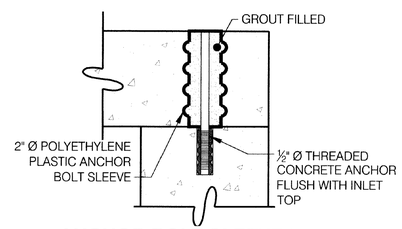

ANCHOR BOLT SLEEVE DETAIL

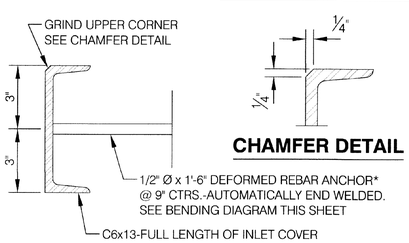

FACE ARMOR DETAIL

SEE NOTE 3

CHAMFER DETAIL

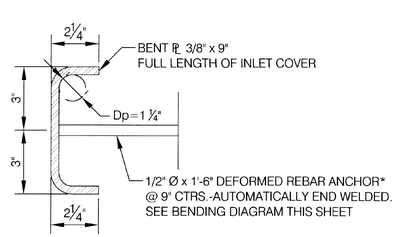

FACE ARMOR DETAIL- ALTERNATE

SEE NOTE 3

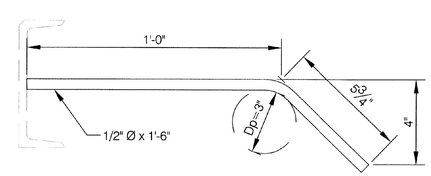

DEFORMED REBAR ANCHOR

NOTES

1. THREADED LIFTING INSERT COILS SHALL BE FLARED THIN SLAB TYPE F-63, ¾" Ø x 3 ½" LONG AS MANUFACTURED BY DAYTON SUPERIOR OR AN PPROVED EQUAL.
2. ~~CONCRETE FOR COVER SHALL BE LC5M WITH f'c = 4000 PSI, AIR ENTRAINMENT = 6% ± 1%, W/C RATIO = 0.44 MAX.~~
3. THE COMPLETED FACE ARMOR/ANCHOR BAR ASSEMBLY SHALL BE HOT-DIP GALVANIZED IN ACCORDANCE WITH ASTM A153.
4. ALL REINFORCING STEEL SHALL BE DEFORMED BARS GRADE 60 IN ACCORDANCE WITH ASTM A615. EPOXY COATING SHALL BE IN ACCORDANCE WITH AASHTO M284. THE COVERING, MEASURED FROM THE FACE OF THE CONCRETE TO THE SURFACE OF ANY REINFORCING BAR SHALL BE 1 ½ INCHES.
5. EXPOSED EDGES OF COVER SHALL BE CHAMFERED.
6. ~~CONTRACTOR/MANUFACTURER CERTIFIES THAT THE CURB INLET TOPS INSTALLED ON THIS PROJECT HAVE BEEN CONSTRUCTED IN ACCORDANCE WITH THE LATEST VERSION OF CITY OF OMAHA STANDARD PLATES 700-21AND 700-30. CONTRACTOR/MANUFACTURER FURTHER WARRANTS THE INLET TOPS FROM FAILURE DUE TO IMPROPER CONSTRUCTION OR MATERIALS FOR A PERIOD OF 5 YEARS FROM THE DATE OF INSTALLATION. ALL INLET TOPS SHALL BE STAMPED WITH THE NAME OF THE MANUFACTURER AND DATE OF MANUFACTURE. THE STAMP SHALL BE IN THE FORM OF A READABLE IMPRESSION LOCATED ON THE TOP OF THE INLET, CENTERED BETWEEN THE FRONT OF THE INLET AND THE MANHOLE RING.~~
7. ~~CONTRACTOR MUST OBTAIN THE "NO DUMPING DRAINS TO WATERWAY" MARKER FROM: KEEP OMAHA BEAUTIFUL, OMAHA DOUGLAS CIVIC CENTER, 1819 FARNAM ST, SUITE 306, OMAHA, NE, 68183, (402) 444-7774~~
8. REINFORCING SHALL BE PLACED WITH A TOLERANCE OF -1/4" AND +1/2" ON CLEARANCE.

	DESIGN ENGINEER CITY ENGINEER	CITY OF OMAHA PUBLIC WORKS DEPARTMENT **REINFORCED CONCRETE CURB INLET COVER WITH FACE ARMOR** TYPE FA	**STANDARD PLATE 700-30** SHEET 1/1 ISSUE DATE: ..... DECEMBER 10, 2013

Offutt Air Force Base

APPROVED

SIGNATURE	OFFICE
BASE CIVIL ENGINEER	
CHIEF OF ENGINEERING	
CHIEF OF DESIGN	
PROJECT MANAGER	

COORDINATION

FIRE DEPARTMENT	
SAFTY	
FORCE PROTECTION	
ENVIRONMENTAL (CEA)	
COMMUNICATION	
USING AGENCY	

"SIGNING OF THE COVER SHEET CONSTITUTES COORDINATION OF ALL DRAWINGS IN THIS PROJECT; SUBSEQUENT SHEETS NEED NOT BE SIGNED."

DESIGN FIRM

hgm ASSOCIATES INC.
ENGINEERING ARCHITECTURE SURVEYING
council bluffs omaha

PROFESSIONAL ENGINEER WILLIAM J. GLISMANN E-6947 STATE OF NEBRASKA

6-09-26
HGM COA NE CA-0065

Designer	Project Manager
	WJG
Drafter	Date
	6-09-26

REVISION	BY/DATE

SHEET TITLE
C3.4
CURB INLET DETAILS

SHEET 27 OF 32

PROJECT TITLE
CONSTRUCT NEW PARKING LOT 3, B1000

Project Number
SGBP-24-0018

Drawing Number OFF-B-6524
Facility Number B1000

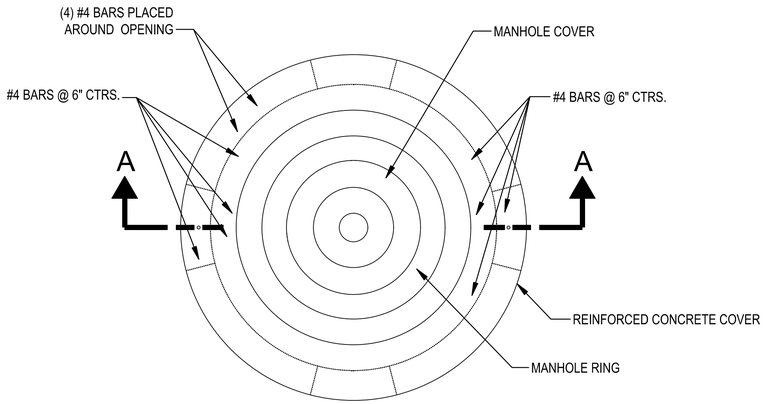

PLAN VIEW

SCALE : 1" = 1'-0"

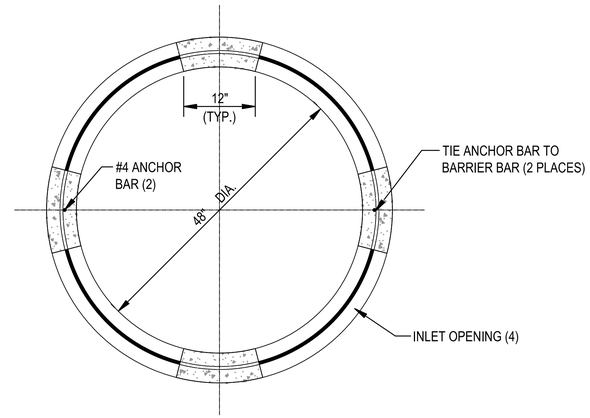

SECTION B-B

SCALE : 1" = 1'-0"

NOTES

1. BARRIER BAR SHALL BE #4 SMOOTH BAR COMPLYING W/ASTM A36, FULLY GALVANIZED IN ACCORDANCE W/ASTM A123.
2. WHERE TWO LEAD PIPES ARE USED, FILET SHALL BE BROUGHT UP TO SPRING LINE OF LARGER PIPE.
3. ALL REINFORCING STEEL SHALL CLEAR ALL SURFACES BY 2".
4. ALL EXPOSED EDGES OF AREA INLET SHALL BE CHAMFERED.
5. CONCRETE SHALL BE OPW-4000.
6. REINFORCING STEEL SHALL BE DEFORMED BARS IN ACCORDANCE WITH ASTM A615 GRADE 60; AND EPOXY COATED IN ACCORDANCE WITH ASTM A775.
7. REINFORCING SHALL BE PLACED WITH A TOLERANCE OF -1/4" AND +1/2" ON CLEARANCE.

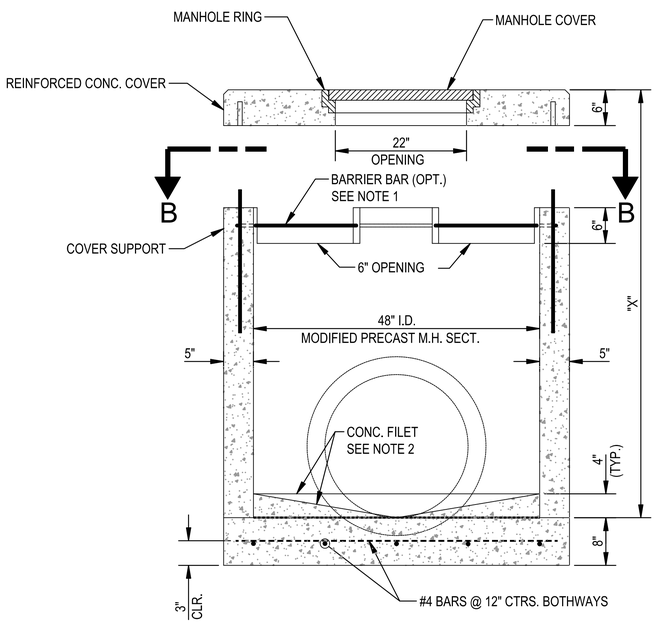

SECTION A-A

SCALE : 1" = 1'-0"

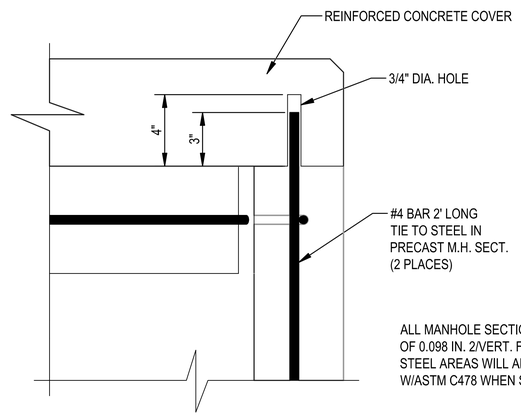

ALL MANHOLE SECTIONS ARE REINFORCED WITH A MINIMUM OF 0.098 IN. 2/VERT. FT. W/WELDED STEEL WIRE FABRIC, STEEL AREAS WILL ALSO BE FURNISHED IN ACCORDANCE W/ASTM C478 WHEN SPECIFIED.

COVER SUPPORT DETAIL

SCALE : 3" = 1'-0"

AREA INLET DETAILS

Offutt
Air Force Base

APPROVED

SIGNATURE	OFFICE
BASE CIVIL ENGINEER	
CHIEF OF ENGINEERING	
CHIEF OF DESIGN	
PROJECT MANAGER	

COORDINATION

FIRE DEPARTMENT	
SAFTY	
FORCE PROTECTION	
ENVIRONMENTAL (CEA)	
COMMUNICATION	
USING AGENCY	

"SIGNING OF THE COVER SHEET CONSTITUTES COORDINATION OF ALL DRAWINGS IN THIS PROJECT; SUBSEQUENT SHEETS NEED NOT BE SIGNED."

DESIGN FIRM

hgm ASSOCIATES INC.
ENGINEERING ARCHITECTURE SURVEYING
council bluffs omaha

WILLIAM J. GLISMANN
E-6947
PROFESSIONAL ENGINEER
STATE OF NEBRASKA

6-09-26
HGM COA NE CA-0065

Designer	Project Manager
	WJG
Drafter	Date
	6-09-26

REVISION	BY/DATE

SHEET TITLE
C3.5
AREA INLET DETAILS

SHEET 28 OF 32

PROJECT TITLE
CONSTRUCT NEW
PARKING LOT 3, B1000

Project Number
SGBP-24-0018

Drawing Number	Facility Number
OFF-B-6524	B1000

FLAG NOTES

1 AS PART OF BASE BID, REMOVE LIGHT POLE AND FIXTURE FOR RELOCATION. TURN OVER TO OPPD FOR STORAGE. REMOVE CONCRETE BASE, UNDERGROUND CONDUIT, AND WIRING IN IT'S ENTIRETY. MAINTAIN THE REMAINING EXISTING FIXTURES CIRCUIT.

2 IF ALTERNATE BID IS ACCEPTED, REMOVE LIGHT POLE AND FIXTURE FOR RELOCATION. TURN OVER TO OPPD FOR STORAGE. REMOVE CONCRETE BASE, UNDERGROUND CONDUIT, AND WIRING IN IT'S ENTIRETY. MAINTAIN THE REMAINING EXISTING FIXTURES CIRCUIT.

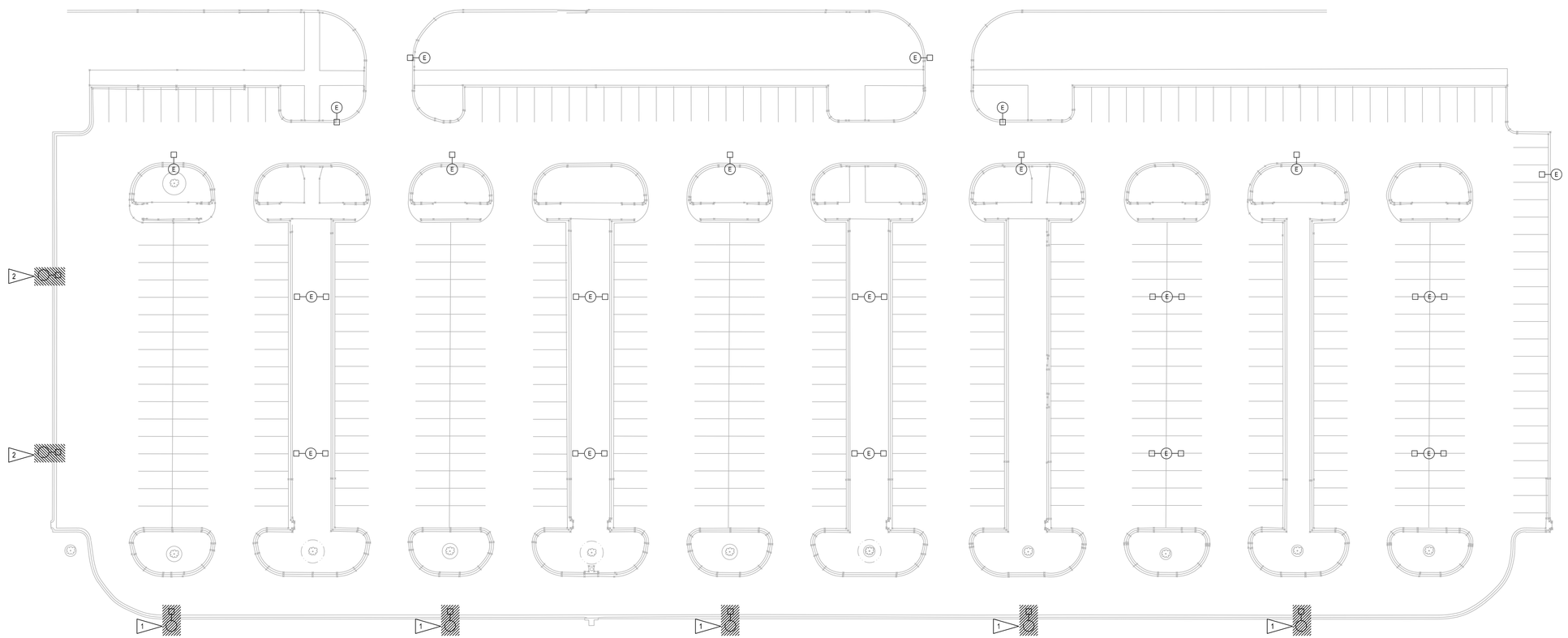

SITE PLAN - ELECTRICAL DEMOLITION

1" = 30'-0"

1 ED1.01 N

Offutt
Air Force Base

APPROVED

SIGNATURE	OFFICE
BASE CIVIL ENGINEER	
CHIEF OF ENGINEERING	
CHIEF OF DESIGN	
PROJECT MANAGER	

COORDINATION

55TH REPRESENTATIVE	
55CPTS	
55CES FIREFIGHTERS	
ENVIRONMENTAL (55CES)	
55CES/CEC/CEM	
55CES ASSET	

"SIGNING OF THE COVER SHEET CONSTITUTES COORDINATION OF ALL DRAWINGS IN THIS PROJECT; SUBSEQUENT SHEETS NEED NOT BE SIGNED."

DESIGN FIRM

hgm ASSOCIATES INC.
ENGINEERING ARCHITECTURE SURVEYING
council bluffs omaha

PROFESSIONAL ELECTRICAL ENGINEER
STEPHEN M. FARRINGTON
E-11987
06-09-26
STATE OF NEBRASKA

Designer	Project Manager
SMF	WJG
Drafter	Date
WJS	06-09-26

REVISION	BY/DATE

SHEET TITLE
ED1.01 - SITE - ELECTRICAL DEMOLITION

SHEET 29 OF 32

PROJECT TITLE
CONSTRUCT NEW PARKING LOT 3, B1000

Project Number
SGBP-24-0018

Drawing Number	Facility Number
OFF-B-6524	B1000

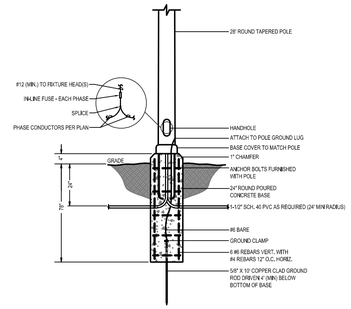

4" POLE BASE
NO SCALE
3 E1.01

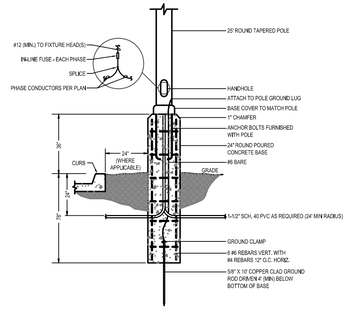

36" POLE BASE
NO SCALE
2 E1.01

SITE LIGHTING SCHEDULE

FIXT #	MANUFACTURER	CATALOG NO. - NOTE 1	BEAM DIST.	LAMP DATA			VOLTAGE	QTY. PER POLE	POLE DESCRIPTION			DESCRIPTION	REMARKS
				SIZE	CCT	LOAD			TYPE NOTE 2	FINISH	HT. (FT.)		
A	LSI INDUSTRIES	MRM LED 18L SIL 3 HW DIM 40 70CRI BRZ	III	18,000 LM	4000K	135W	480V	2	RTS	BRZ	25'	SITE LIGHTING	NOTE 4
R	RELOCATED	RELOCATED	III	7,625 LM	4000K	150W	480V	1	RTS	BRZ	28'	SITE LIGHTING	NOTE 3

NOTES:

1. CONTRACTOR SHALL VERIFY LIGHT FIXTURE CATALOG NUMBER & INSTALLATION REQUIREMENTS PRIOR TO ORDERING.
2. POLE TYPE DESCRIPTION: SSS = SQUARE STRAIGHT STEEL, STS = SQUARE TAPERED STEEL, RSS = ROUND STRAIGHT STEEL, RTS = ROUND TAPERED STEEL
3. RELOCATE POLE AND FIXTURE, PROVIDE NEW 4" CONCRETE BASE.
4. PROVIDE POLE 'RTPB5-S11G-25-D180-BRZ' ON NEW 36" CONCRETE BASE.

FLAG NOTES

1. PROVIDE NEW 4" CONCRETE BASE FOR RELOCATED LIGHT FIXTURE/POLE. SEE DETAIL FOR MORE INFORMATION.
2. CIRCUIT NEW AND RELOCATED SITE LIGHTS TO OPPD PEDESTAL SERVING EXISTING SITE LIGHTING CIRCUIT WITH A NEW 20/3 CIRCUIT BREAKER AND 3#8,#8G-1"C. CONNECT NEW CIRCUIT TO EXISTING PHOTOCELL CONTROL. COORDINATE EXACT LOCATION OF EXISTING PEDESTAL WITH OPPD AND VERIFY VOLTAGE DROP.
3. LOWERCASE LETTERS INDICATE PHASE OF THREE-PHASE CIRCUIT TO CIRCUIT TO.

ALL NEW ELECTRICAL WORK SHOWN IN PLANS IS TO BE COMPLETED BY OPPD.

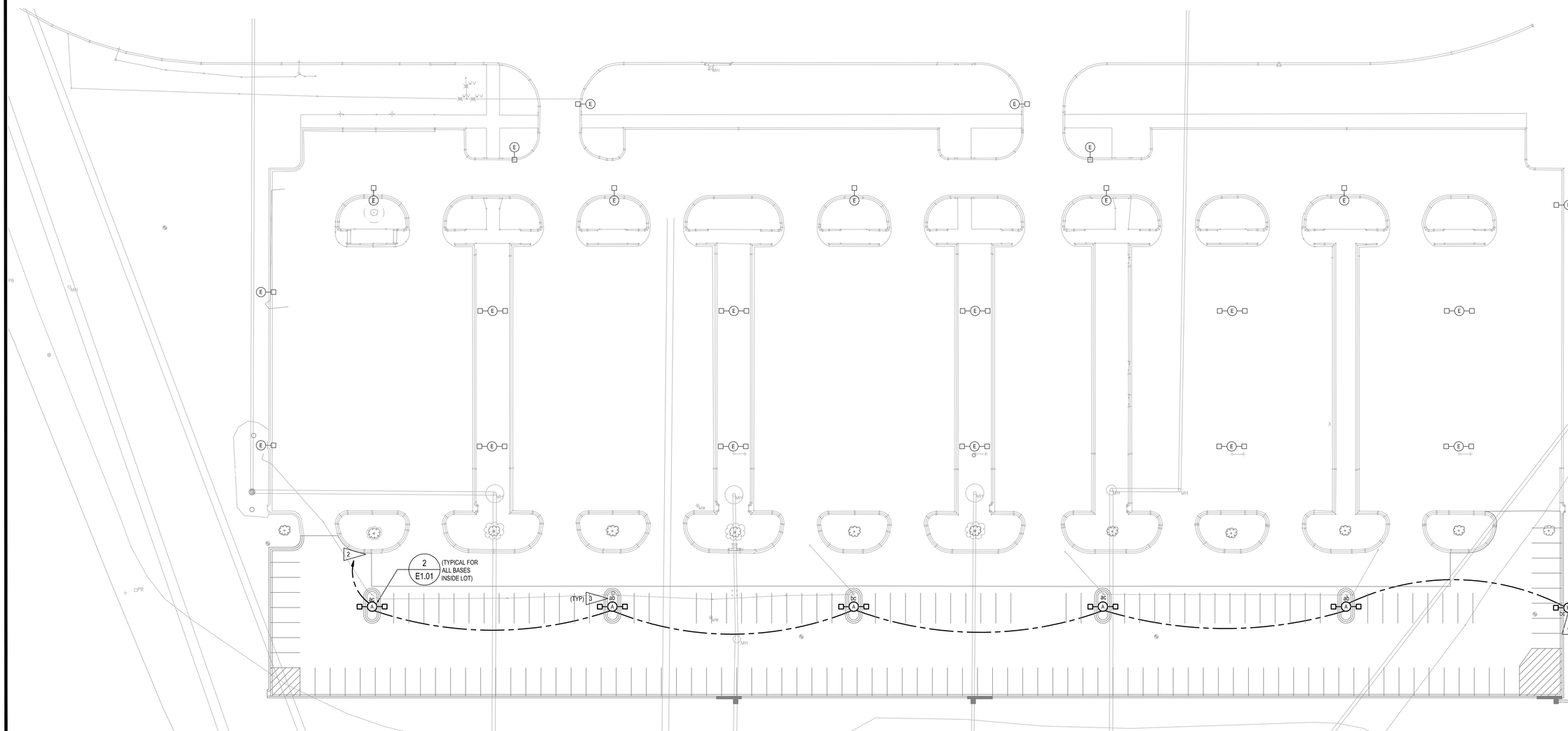

SITE PLAN - BASE BID - ELECTRICAL
1" = 30'-0"
1 E1.01

Offutt Air Force Base

APPROVED

SIGNATURE	OFFICE
[illegible]	
[illegible]	
[illegible]	
[illegible]	

COORDINATION

[illegible]	
[illegible]	
[illegible]	
[illegible]	
[illegible]	
[illegible]	

"SIGNING OF THE COVER SHEET CONSTITUTES COORDINATION OF ALL DRAWINGS IN THIS PROJECT; SUBSEQUENT SHEETS NEED NOT BE SIGNED."

DESIGN FIRM

hgm ASSOCIATES INC.
ENGINEERING ARCHITECTURE SURVEYING
council bluffs omaha

PROFESSIONAL ELECTRICAL ENGINEER
STEPHEN M. FARRINGTON
E-11987
06-09-26
STATE OF NEBRASKA

Designer	Project Manager
SMF	WJG
Drafter	Date
WJS	06-09-26

REVISION	BY/DATE

SHEET TITLE
E1.01 - SITE PLAN - BASE BID ELECTRICAL

SHEET 30 OF 32

PROJECT TITLE
CONSTRUCT NEW PARKING LOT 3, B1000

Project Number
SGBP-24-0018

Drawing Number	Facility Number
OFF-B-6524	B1000

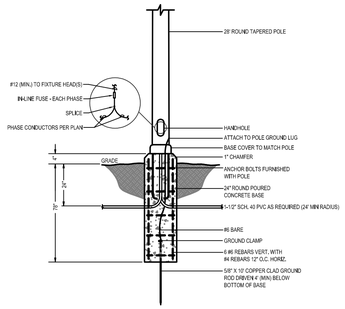

4" POLE BASE
NO SCALE
3 / E1.01

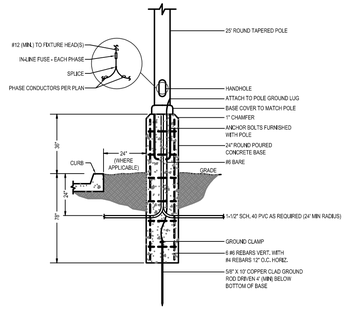

36" POLE BASE
NO SCALE
2 / E1.01

SITE LIGHTING SCHEDULE

FIXT #	MANUFACTURER	CATALOG NO. - NOTE 1	BEAM DIST.	LAMP DATA			VOLTAGE	QTY. PER POLE	POLE DESCRIPTION			DESCRIPTION	REMARKS
				SIZE	CCT	LOAD			TYPE NOTE 2	FINISH	HT. (FT.)		
A	LSI INDUSTRIES	MRM LED 18L SIL 3 HW DIM 40 70CRI BRZ	III	18,000 LM	4000K	135W	480V	2	RTS	BRZ	25'	SITE LIGHTING	NOTE 4
R	RELOCATED	RELOCATED	III	7,625 LM	4000K	150W	480V	1	RTS	BRZ	28'	SITE LIGHTING	NOTE 3

NOTES:

1. CONTRACTOR SHALL VERIFY LIGHT FIXTURE CATALOG NUMBER & INSTALLATION REQUIREMENTS PRIOR TO ORDERING.
2. POLE TYPE DESCRIPTION: SSS = SQUARE STRAIGHT STEEL, STS = SQUARE TAPERED STEEL, RSS = ROUND STRAIGHT STEEL, RTS = ROUND TAPERED STEEL
3. RELOCATE POLE AND FIXTURE, PROVIDE NEW 4" CONCRETE BASE.
4. PROVIDE POLE 'RTPB5-S11G-25-D180-BRZ' ON NEW 36" CONCRETE BASE.

FLAG NOTES

1. PROVIDE NEW 4" CONCRETE BASE FOR RELOCATED LIGHT FIXTURE/POLE. SEE DETAIL FOR MORE INFORMATION.
2. CIRCUIT NEW AND RELOCATED SITE LIGHTS TO OPPD PEDESTAL SERVING EXISTING SITE LIGHTING CIRCUIT WITH A NEW 20/3 CIRCUIT BREAKER AND 3#8,#8G-1"C. CONNECT NEW CIRCUIT TO EXISTING PHOTOCELL CONTROL. COORDINATE EXACT LOCATION OF EXISTING PEDESTAL WITH OPPD AND VERIFY VOLTAGE DROP.
3. COORDINATE INSTALLATION OF CONCRETE BASES AND CONDUIT WITH EXISTING UNDERGROUND GAS LINE ON WEST END OF PARKING LOT.
4. LOWERCASE LETTERS INDICATE PHASE OF THREE-PHASE CIRCUIT TO CIRCUIT TO.

ALL NEW ELECTRICAL WORK SHOWN IN PLANS IS TO BE COMPLETED BY OPPD.

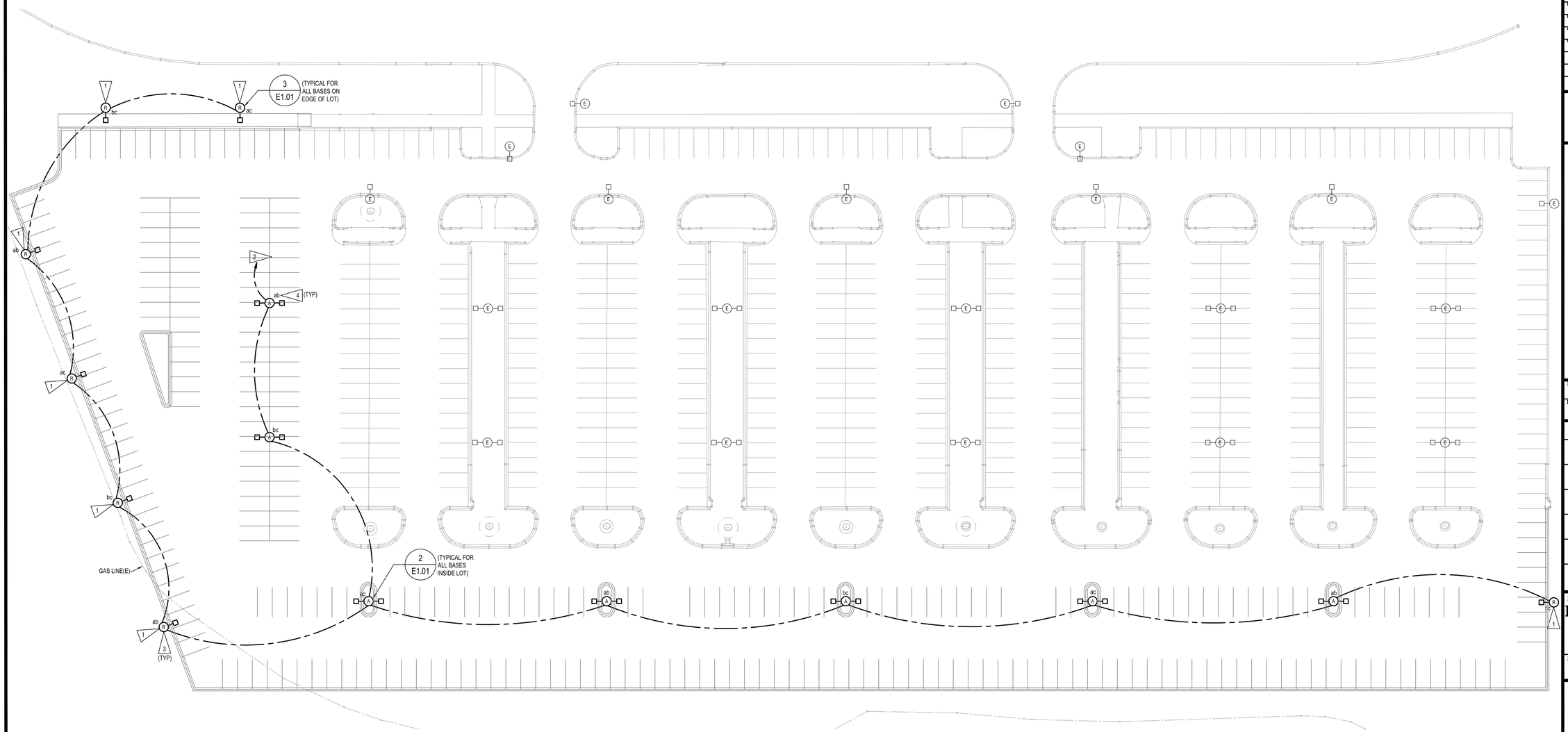

SITE PLAN - ALTERNATE - ELECTRICAL
1" = 30'-0"
1 / E1.02

Offutt Air Force Base

APPROVED

SIGNATURE	OFFICE
[illegible]	
[illegible]	
[illegible]	
[illegible]	

COORDINATION

[illegible]	
[illegible]	
[illegible]	
[illegible]	
[illegible]	
[illegible]	

"SIGNING OF THE COVER SHEET CONSTITUTES COORDINATION OF ALL DRAWINGS IN THIS PROJECT; SUBSEQUENT SHEETS NEED NOT BE SIGNED."

DESIGN FIRM

hgm ASSOCIATES INC.
ENGINEERING ARCHITECTURE SURVEYING
council bluffs omaha

PROFESSIONAL ELECTRICAL ENGINEER
STEPHEN M. FARRINGTON
E-11987
06-09-26
STATE OF NEBRASKA

Designer	Project Manager
SMF	WJG
Drafter WJS	Date 06-09-26

REVISION	BY/DATE

SHEET TITLE
E1.02 - SITE PLAN - ALTERNATE ELECTRICAL

SHEET 31 OF 32

PROJECT TITLE
CONSTRUCT NEW PARKING LOT 3, B1000

Project Number SGBP-24-0018

Drawing Number OFF-B-6524 | Facility Number B1000

PARKING LOT LIGHTING CALCULATION STATISTICS	
AVERAGE FOOTCANDLES	2.42
MAXIMUM FOOTCANDLES	6.1
MINIMUM FOOTCANDLES	0.5
MAXIMUM TO MINIMUM RATIO	12.2:1
AVERAGE TO MINIMUM RATIO	4.8:1

NOTES:

1. CALCULATIONS ARE BASED ON FIXTURE TYPE SCHEDULED, IF FIXTURE OTHER THAN THOSE SPECIFIED IS PROVIDED, THE MANUFACTURER SHALL PROVIDE A DETAILED POINT-BY-POINT CALCULATION TO VERIFY COMPLIANCE WITH LOCAL STREET AND PARKING LOT LIGHTING GUIDELINES.
2. CALCULATIONS DO NOT INCLUDE CONTRIBUTIONS FROM STREET OR EXISTING LIGHT FIXTURES. ACTUAL FOOTCANDLE LEVELS MAY VARY DEPENDING ON LOCATIONS AND QUANTITIES OF FIXTURES OUTSIDE OF PROPERTY LINE.

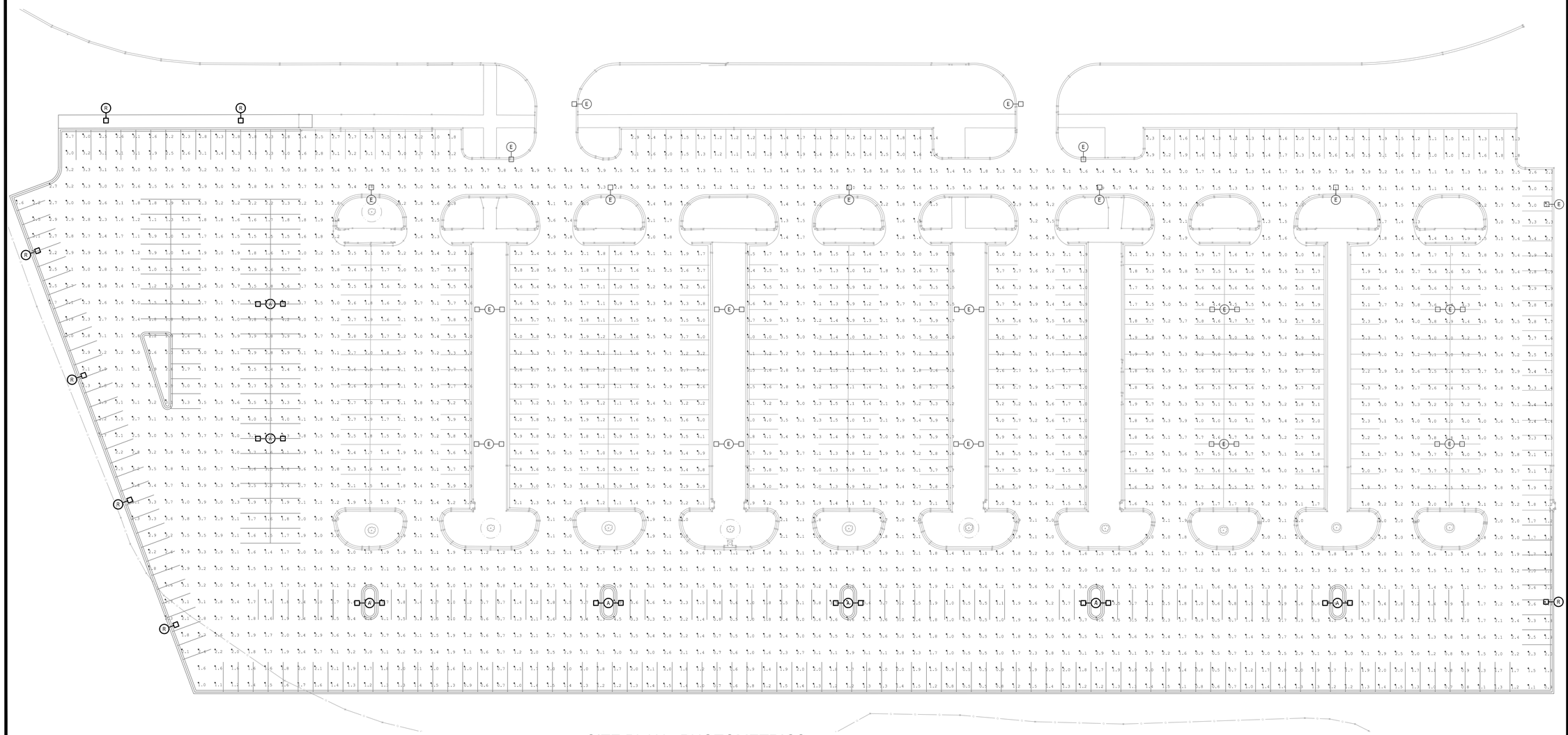

SITE PLAN - PHOTOMETRICS

1" = 30'-0"

1 E2.01

N

Offutt Air Force Base

APPROVED

SIGNATURE	OFFICE
[illegible]	
[illegible]	
[illegible]	
[illegible]	

COORDINATION

[illegible]	
[illegible]	
[illegible]	
[illegible]	
[illegible]	
[illegible]	

"SIGNING OF THE COVER SHEET CONSTITUTES COORDINATION OF ALL DRAWINGS IN THIS PROJECT; SUBSEQUENT SHEETS NEED NOT BE SIGNED."

DESIGN FIRM

hgm ASSOCIATES INC.
ENGINEERING ARCHITECTURE SURVEYING
council bluffs omaha

PROFESSIONAL ELECTRICAL ENGINEER
STEPHEN M. FARRINGTON
E-11987
06-09-26
STATE OF NEBRASKA

Designer	Project Manager
SMF	WJG
Drafter	Date
WJS	06-09-26

REVISION	BY/DATE

SHEET TITLE

E2.01 - SITE PLAN - PHOTOMETRICS

SHEET 32 OF 32

PROJECT TITLE

CONSTRUCT NEW PARKING LOT 3, B1000

Project Number: SGBP-24-0018

Drawing Number: OFF-B-6524

Facility Number: B1000