TI 6340.49

FINAL

TECHNICAL MANUAL
DEPOT MAINTENANCE

CONTROLLED
DOCUMENT

ARSR-4 SYSTEM

POWER AMPLIFIER MODULE (PAM) TEST SET

MAINTENANCE MANUAL

CONTRACT DTFA01-88-C-00037

CONTRACTOR
NORTHROP GRUMMAN CORPORATION
BALTIMORE, MARYLAND 21203

MADE FOR
U.S. DEPARTMENT OF TRANSPORTATION
FEDERAL AVIATION ADMINISTRATION

(31 JULY 1998)

Attachment 2
Exhibit 6.1

INTRODUCTION

This maintenance manual consists of three separately-bound manuals containing depot-level maintenance data for the power amplifier module (PAM) test set. This manual contains general information, maintenance procedures, parts lists, illustrations, and Appendix A, List of Acronyms and Abbreviations, in an 8 1/2-inch by 11-inch format. Appendix B, Circuit Diagrams, and Appendix C, Illustrations, are separately-bound manuals in an 11-inch by 17-inch flat-pak format.

SAFETY SUMMARY

SAFETY NOTICE

The attention of operating and maintenance personnel is directed to Federal Aviation Administration (FAA) Instruction 6000.15, Maintenance of Airway Facilities, for instructions on the subject of safety precautions to be observed, and to FAA Order 3900.0, Accident Prevention Handbook for Airway Facility Personnel. Personnel must observe the safety regulations at all times.

KEEP AWAY FROM LIVE CIRCUITS

Hazardous voltages are present within units under test. Use extreme caution when removing or installing plug-in components or making adjustments. Under certain conditions, dangerous potentials may exist in circuits with power controls in the off position due to charges retained by capacitors. To avoid casualties, always remove power, and then discharge the capacitors with a grounding rod before touching any parts.

WARNINGS AND CAUTIONS

Observe all warnings and cautions within this manual for maximum personnel and equipment safety.

PRECAUTIONARY NOTICE, SEMICONDUCTOR DEVICES/INTEGRATED CIRCUITS

This equipment contains semiconductor devices that may be damaged by static discharge. Strictly adhere to the electrostatic discharge (ESD) precautionary measures within this manual before attempting to perform any procedure.

TABLE OF CONTENTS

Paragraph	Title	Page
	CHAPTER 1 - GENERAL INFORMATION AND REQUIREMENTS	
1.1	Introduction	1-1
1.2	Equipment Description	1-1
1.2.1	Functional Description	1-1
1.2.2	Physical Description	1-1
1.2.3	Electrical Description	1-1
1.2.3.1	PAM Test Console	1-1
1.2.3.2	Computer/Controller	1-6
1.2.3.3	PAM Test Fixture	1-6
1.3	Text Conventions	1-6
1.4	Equipment Specifications Data	1-7
1.5	Equipment and Accessories Supplied	1-7
1.6	Equipment Required but Not Supplied	1-7
1.7	Related Instruction Books	1-7
	CHAPTER 2 - INSTALLATION INSTRUCTIONS	
2.1	Facilities	2-1
2.2	Installation Instructions	2-1
2.2.1	PAM Test Console	2-1
2.2.2	Computer Table	2-1
2.2.3	Input Power	2-1
2.2.3.1	PAM Test Console	2-1
2.2.3.1.1	Three-Phase Configuration	2-1
2.2.3.1.2	Single-Phase Configuration	2-1
2.2.3.2	Ground	2-1
2.2.4	Interconnections	2-2
	CHAPTER 3 - CONTROLS AND INDICATORS	
3.1	Scope	3-1
	CHAPTER 4 - THEORY OF OPERATION	
4.1	Scope	4-1
4.2	Custom Hardware	4-1

TABLE OF CONTENTS--Continued

Paragraph	Title	Page
4.2.1	Interface Board	4-1
4.2.1.1	UUT Identification	4-1
4.2.1.1.1	PAM	4-1
4.2.1.1.2	Lookdown Driver	4-4
4.2.1.1.3	Preamplifier	4-4
4.2.1.2	Interlock Logic	4-4
4.2.1.3	Automatic Mode of Operation	4-5
4.2.1.3.1	6-Port Reflectometer/Spectrum Analyzer Selection	4-5
4.2.1.3.2	Coupled Input Selection	4-5
4.2.1.3.3	Data Flow	4-12
4.2.1.3.4	Pulsed RF Generation	4-12
4.2.1.3.5	Amplifier Panel Trigger Generation	4-12
4.2.1.3.6	Lookdown Driver Serial Data Control	4-12
4.2.1.3.7	1.7-MHz Oscillator Circuit	4-12
4.2.1.4	Operator-Initiated Operation	4-12
4.2.1.4.1	6-Port/Spectrum Analyzer Monitor Selection	4-13
4.2.1.4.2	Coupled Input Selection	4-13
4.2.1.4.3	UUT Power Control	4-14
4.2.1.4.4	Blower Control	4-14
4.2.2	Peripheral Interface Panel	4-14
4.2.3	Control Panel	4-14
4.2.4	RF Test Panel	4-16
4.2.4.1	PAM and Lookdown Driver Testing	4-16
4.2.4.2	Preamplifier Testing	4-16
4.2.4.3	RF Test Panel Indicators	4-17
4.2.4.3.1	UUT Indicators	4-17
4.2.4.3.2	Monitor Indicators	4-17
4.2.4.3.3	Coupled Input Indicators	4-17
4.2.5	Amplifier Panel	4-21
4.2.6	6-Port Reflectometer	4-21
4.2.7	PAM Test Fixture	4-22
4.3	Diagnostic System Theory of Operation	4-23
4.3.1	Definition of Terms	4-23
4.3.2	Rulebase Syntax	4-24
4.3.2.1	Rulebase Files	4-24
4.3.2.1.1	Logical ORing	4-25
4.3.2.1.2	Line Continuation	4-25
4.3.2.1.3	Delimiters	4-25

TABLE OF CONTENTS--Continued

Paragraph	Title	Page
4.3.2.1.4	Test Order in Rulebase	4-25
4.3.2.1.5	Comments	4-25
4.3.2.2	Conclusion Database	4-26
4.3.3	Rulebase Compiler	4-26
4.3.3.1	Compiled Rulebase Example	4-27
4.3.3.2	Sample Code to Read the Compiled Rulebase	4-27
4.3.4	Inference Engine Algorithm	4-28
4.3.5	Order of Needed Fact Selection	4-30
4.3.6	Example of Execution	4-30
4.3.7	Diagnostic/Fault Isolation Summary	4-31
4.3.7.1	General Overview	4-31
4.3.7.2	UUT Specific Diagnostics	4-32

CHAPTER 5 - MAINTENANCE INSTRUCTIONS

5.1	Scope	5-1
5.2	Standard Shop Practices	5-1
5.3	PAM Test Set Test and Maintenance Procedures	5-1
5.3.1	Manual Test Procedures	5-1
5.3.1.1	Blowers and Interlocks Test	5-1
5.3.1.2	Voltage Verification Test	5-2
5.3.2	Automatic Test Procedures	5-2
5.3.2.1	IEEE-488 Communications Test (Test 0)	5-3
5.3.2.2	Power Supply Tests (Tests 1 through 6)	5-3
5.3.2.3	Interface Board Tests (Tests 7 through 18)	5-5
5.3.2.4	Timing Tests (Test 19)	5-6
5.3.2.5	UUT Interlock Tests (Test 20)	5-8
5.3.2.6	RF Test Panel Test	5-9
5.3.3	Maintenance and Calibration	5-12
5.3.3.1	Commercial Equipment Calibration	5-12
5.3.3.2	Custom Equipment Power Supply Adjustments	5-13
5.3.3.2.1	RF Test Panel Power Supply PS1 Adjustments	5-13
5.3.3.2.2	Control Panel Power Supply PS1 Adjustments	5-14
5.3.3.3	RF Path Loss Calibration	5-14
5.3.3.3.1	RF Path Loss Calibration Initiation	5-15
5.3.3.3.2	AT1 Initial Adjustments	5-17
5.3.3.3.3	Preamp RF Source Forward Path Measurement	5-18
5.3.3.3.4	Preamp RF Source Reverse Path Measurement	5-18
5.3.3.3.5	Preamp RF Monitor Path Measurement	5-19

TABLE OF CONTENTS--Continued

Paragraph	Title	Page
5.3.3.3.6	Preamp RF Monitor Tuning Path Measurement	5-19
5.3.3.3.7	Lookdown Driver RF Monitor Path Measurement	5-20
5.3.3.3.8	PAM RF Monitor Path Measurement	5-20
5.3.3.3.9	PAM RF Source Forward Path Measurement	5-21
5.3.3.3.10	Final Calculations	5-21
5.3.3.4	Maintenance Procedures	5-21
5.3.3.4.1	Air Filters	5-22
5.3.3.4.2	Connector Inspection	5-22
5.3.3.4.3	Care of QMI Semi-Flex Cables in the RF Test Panel	5-22
5.3.3.5	Troubleshooting Techniques	5-23
5.3.3.5.1	RF Path Troubleshooting	5-23
5.3.3.5.2	Interface Board Troubleshooting	5-23
5.3.3.5.3	Amplifier Panel Troubleshooting	5-24

CHAPTER 6 - CIRCUIT DIAGRAMS

6.1	Introduction	6-1
6.2	Schematic Diagrams	6-1
6.3	Wire Tabulations	6-1
6.4	Wiring Diagrams	6-1
6.5	Cable Diagrams	6-1
6.6	PAL Equation Documents	6-1

CHAPTER 7 - PARTS LISTS AND ILLUSTRATIONS

7.1	Introduction	7-1

APPENDIXES

A	LIST OF ACRONYMS AND ABBREVIATIONS	A-1
B	CIRCUIT DIAGRAMS	B-1
C	ILLUSTRATIONS	C-1

LIST OF ILLUSTRATIONS

Figure	Title	Page
1-1	PAM Test Set	1-2
3-1	PAM Test Console	3-2
3-2	RF Test Panel	3-3
3-3	Control Panel	3-7
3-4	PAM Test Fixture	3-11
4-1	PAM Test Set Functional Block Diagram	4-2
4-2	PAM Test Set Interface Functional Block Diagram	4-6
4-3	Control Panel Functional Block Diagram	4-15
4-4	RF Test Panel Functional Block Diagram	4-18
4-5	RF Test Panel Indicators Functional Block Diagram	4-20
4-6	Amplifier Panel Functional Block Diagram	4-21
4-7	6-Port Reflectometer Functional Block Diagram	4-21
4-8	PAM Test Fixture Functional Block Diagram	4-22
4-9	Fault Isolation Test Example	4-31
5-1	Timing Tests Waveforms	5-7

LIST OF TABLES

Number	Title	Page
1-1	PAM Test Set Major Subassemblies and COTS Equipment	1-4
1-2	PAM Test Set Reference Data	1-8
1-3	Equipment and Accessories Supplied	1-10
1-4	Related Publications	1-13
3-1	PAM Test Console, Description of Controls and Indicators	3-3
3-2	RF Test Panel, Description of Controls and Indicators	3-4
3-3	Control Panel, Description of Controls and Indicators	3-7
3-4	PAM Test Fixture, Description of Controls and Indicators	3-11
5-1	IEEE-488 Communications (GPIB) Test Expected Results and Corrective Action	5-4
5-2	Power Supply Tests Expected Results and Corrective Action	5-4
5-3	Interface Board Tests Expected Results and Corrective Action	5-5
5-4	Interlock Tests Expected Results and Corrective Action	5-8
5-5	RF Test Panel Tests Expected Results and Corrective Action	5-10
5-6	COTS Equipment Requiring Calibration	5-12
6-1	Schematic Diagrams	6-2
6-2	Interconnecting Wiring Diagrams	6-2

LIST OF TABLES--Continued

Number	Title	Page
6-3	Cable Diagrams	6-2
6-4	PAL Equation Documents	6-3
7-1	Separate Parts Lists	7-2
7-2	Assembly Drawings and Assembly Drawings with Parts Lists	7-3

CHAPTER 1

GENERAL INFORMATION AND REQUIREMENTS

1.1 INTRODUCTION.- This technical instruction book (TIB) contains depot-level maintenance instructions for the Air Route Surveillance Radar-Model 4 (ARSR-4) power amplifier module (PAM) test set, hereinafter referred to as the PAM test set. The information provided in this TIB includes detailed technical descriptions, maintenance tasks, and troubleshooting procedures. Supporting illustrations and tables are provided.

1.2 EQUIPMENT DESCRIPTION.- The PAM test set consists of a PAM test console, a computer/controller, a PAM test fixture and various cables. Figure 1-1 shows the PAM test console and computer/controller. The following paragraphs provide a brief description of the PAM test set.

1.2.1 Functional Description.- The PAM test set is a computer-operated diagnostic test tool designed to perform functional testing, fault diagnosis, and repair verification of the lookdown drivers, preamplifiers, and the PAMs which have been returned from the radar sites. The PAM test set also provides instructions to the operator for unit under test (UUT) tuning and phasing.

1.2.2 Physical Description.- The PAM test console is a multipurpose test console that is a two-bay cabinet containing custom equipment and commercial off-the-shelf (COTS) test equipment, which is controlled by a computer/controller. The computer/controller, monitor, and printer, for the printing of test results and test data sheets, are located on a mobile computer table. The PAM test console and applicable cables provide output loads, test points, signal conditioning and mechanical support for the lookdown driver and preamplifier UUTs. The PAM test fixture and applicable cables provide mechanical support for the PAM UUT and connect the PAM UUT to the PAM test console, which then provides output loads, test points, and signal conditioning for PAM UUT. The PAM test fixture also provides the cooling for the PAM UUT. Table 1-1 lists the quantities of all the major subassemblies and COTS equipment.

1.2.3 Electrical Description.- The PAM test set utilizes the PAM test console, the computer/controller, and PAM test fixture to perform six types of UUT output performance tests: transistor collector current test, RF peak pulsed power test, spurious emissions test, pulse amplitude drop test, timing waveform check, and BITE status check. A general purpose interface bus (GPIB) connects the computer/controller to the custom equipment and to the COTS test equipment inside the PAM test console. The following paragraphs provide a brief electrical description of the major assemblies of the PAM test set.

1.2.3.1 PAM Test Console.- The PAM test console provides the electrical stimulus and measurement capability to test the UUTs. The PAM test console is controlled by the computer/controller via the GPIB. COTS dc power supplies within the console provide the dc voltages necessary to operate the UUTs and the equipment within the console. A COTS signal generator provides the continuous wave (CW) and swept low-level RF signal stimuli to the UUTs. The custom amplifier panel provides the RF components necessary to modulate, attenuate, sample,

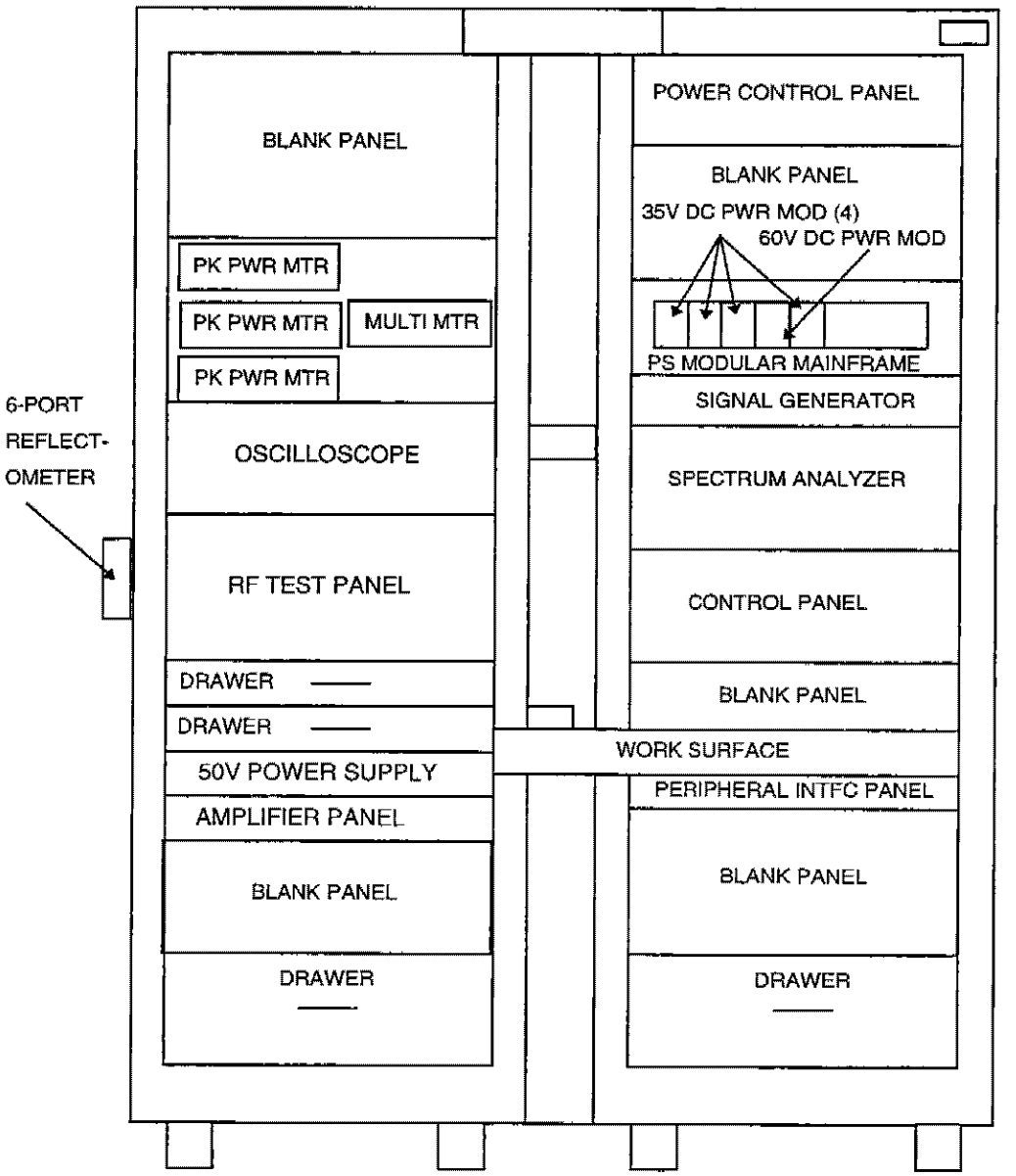

PAM TEST CONSOLE

Figure 1-1. PAM Test Set (Sheet 1 of 2)

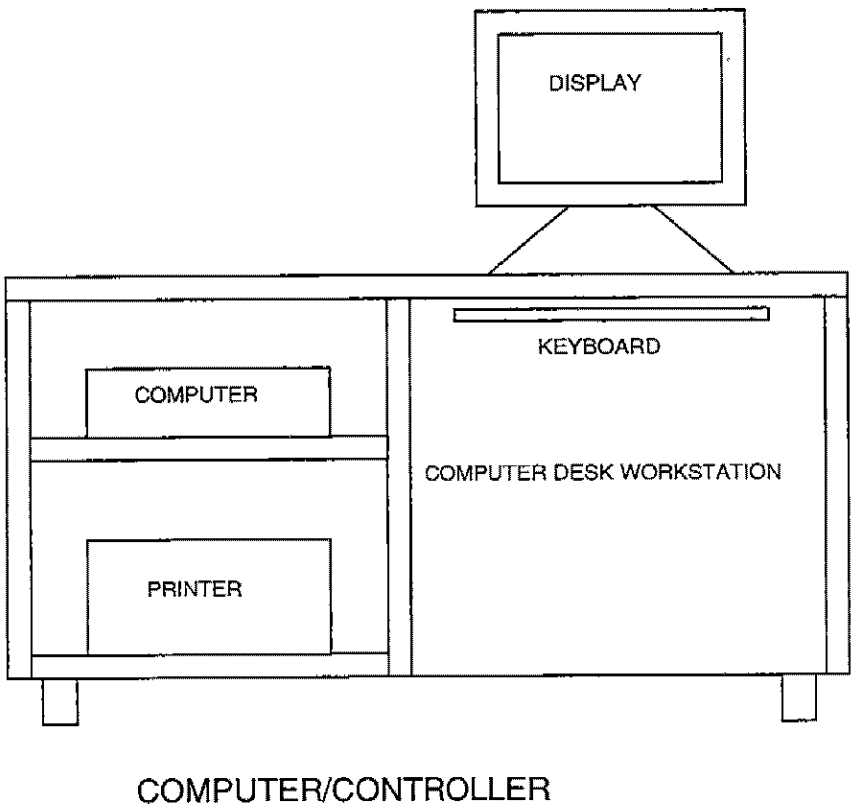

Figure 1-1. PAM Test Set (Sheet 2 of 2)

Table 1-1. PAM Test Set Major Subassemblies and COTS Equipment

Model No./ Part No.	Description	Manufacturer	Quantity
AD421401GO1	PAM Test Console	Northrop Grumman	
AD421402GO1	Control Panel	Northrop Grumman	1
AD421403GO1	RF Test Panel	Northrop Grumman	1
AD421404GO1	Amplifier Panel	Northrop Grumman	1
AD420924GO1	Peripheral Interface Panel	Northrop Grumman	1
AD421432GO1	6-Port Reflectometer	Northrop Grumman	1
PC 846	Power Input Panel	Pulizzi	1
HP 8560E OPT 909	Spectrum Analyzer	Hewlett Packard	1
HP 66000A OPT 834, 909	Power Supply Mainframe	Hewlett Packard	1
HP 66103A	Power Module, 35V/4.5A	Hewlett Packard	4
HP 66104A	Power Module, 60V/2.5A	Hewlett Packard	1
I62B-5040	Power Supply, 50V/40A	Power Ten	1
52024-001S OPT 5	Signal Generator	Marconi	1
PM3380A/403	Oscilloscope	Fluke	1
2001	Multimeter	Keithley	1
2000-SCAN	Scan Card	Keithley	1
GT8542B OPT 1	Peak Power Meter	Gigatronics	2
GT80350A	Peak Power Sensor	Gigatronics	2

Table 1-1. PAM Test Set Major Subassemblies and COTS Equipment--Continued

Model No./ Part No.	Description	Manufacturer	Quantity
	Computer Workstation		
AA421430G01	Computer/Controller	Northrop Grumman	1
65877AT	Computer	IBM	1
6544403	Monitor	IBM	1
07H0653	Keyboard	IBM	1
2X32-70T	Mouse	IBM	1
PC 5897K	Computer Workstation Desk	Global	1
AD421405G01	Interface Board	Northrop Grumman	1
DT2819	Counter/Timer Board	Data Translation	1
776786-01	AT-GPIB/TNT CCA	National Instruments	1
3C509-TPO	Network Interface Card	Data Translation	1
KC91251	Laser Jet 5MP Printer	Hewlett Packard	1

and switch the UUT stimuli to the PAM and also the RF components necessary to test responses from the PAM. The COTS peak power meter, in conjunction with its related power sensors, measures peak pulsed power stimuli to the UUTs and measures peak power responses from the UUTs. The two COTS average power meters, in conjunction with the custom 6-port reflectometer, measure power level outputs during UUT insertion phase measurements. The COTS spectrum analyzer measures spurious emissions responses from the UUTs. The COTS oscilloscope displays various pulse waveshapes of the UUT and/or PAM test console outputs. The COTS digital multimeter(DMM) measures dc power supply voltages and performs UUT resistance and voltage measurements. The custom control panel provides the control, power, stimulus, and sample, and response interface to the UUT or PAM test fixture and provides monitor access for the power supplies, digital input/output (I/O) lines and various UUT pulse signals.

1.2.3.2 Computer/Controller.- The computer/controller controls the PAM test console, via the GPIB, and provides an operator interface via the CRT, mouse, and keyboard. The COTS GPIB interface circuit card assemblies (CCAs) are located in the computer/controller. Stimulus of the UUTs and measurement of test results are provided by test software control of the custom equipment and COTS equipment that make up the PAM test console.

1.2.3.3 PAM Test Fixture.- The PAM test fixture provides the electrical interface between the PAM test console and the PAM UUT and provides the required dc bias capacitors. Additionally, the fixture provides analog meters for diagnostics and provides the capability to verify the performance of the PAM when combined with the built-in test equipment (BITE) capacitor assembly.

1.3 TEXT CONVENTIONS.- This manual uses several text conventions to convey certain actions to the reader. The conventions used in this manual are as follows:

Boldface type:

Boldface type indicates the presence of a **NOTE**, **WARNING**, or **CAUTION** within the text or procedure.

Boldface type also indicates to the user the availability of a menu dialog box selection that requires an action, such as clicking on it with the cursor through mouse movements or selecting it via the tab key.

Example:
In the test failure window, click on **PASS on FAIL** where "PASS on FAIL" is a menu selection on the screen.

Italicized type:

Italicized type is used for user input.

Example:
The user is directed to change from the root directory to the test directory. The text will appear as follows:

At the C prompt, type *CD \test* and press <ENTER>.

The user types in the italicized text, via the keyboard, to change to the test directory.

Bracketed text:

During test set use, the user may be directed to press specific keys to initiate a test set function or action. The pressing of the keys is known as "keyboard commands." The keyboard commands are bracketed by the "<>" symbols.

Example:
In the previous example, the word "ENTER" is bracketed by the "<>" symbols. The "ENTER" key is a named key on the keyboard. When the "ENTER" key is pressed, it informs the test set to read the keyboard input and perform the action of switching to the test directory.

If the user is required to press two or more keys simultaneously, the key names are bracketed and separated by dashes. Pressing the "CTRL" and the "R" keys simultaneously is indicated in the text as <CTRL-R>.

1.4 EQUIPMENT SPECIFICATIONS DATA.- Table 1-2 contains the nameplate data, physical characteristics, external power requirements, and environmental characteristics for the PAM test set.

1.5 EQUIPMENT AND ACCESSORIES SUPPLIED.- Table 1-3 contains a list of all equipment and accessories (including spares) supplied with the PAM test set.

1.6 EQUIPMENT REQUIRED BUT NOT SUPPLIED.- Some units tested on the PAM test set contain electrostatic sensitive devices (ESDS); consequently, ground mats and wrist straps are required. However, this equipment, is not supplied.

1.7 RELATED INSTRUCTION BOOKS.- Table 1-4 contains a list of all related publications, including vendor documents, that are referenced throughout this TIB.

Table 1-2. PAM Test Set Reference Data

Item	Description
Nameplate Data	
Manufacturer	Northrop Grumman Corporation 1111 Schilling Road Hunt Valley, MD. 21031
FAA Type	N/A
Manufacturer's Type	N/A
Physical Characteristics	
PAM Test Console Dimensions	
Height	82 inches
Width	54 inches
Depth	48 inches (includes 18-inch deep work surface)
Weight	Approximately 300 pounds
Volume	132,840 cubic inches (76.88 cubic feet)
Computer/Controller/Table Dimensions	
Height	28 inches (without computer/controller monitor)
Width	60 inches
Depth	30 inches
Weight	Approximately 75 pounds
Volume	50,400 cubic inches (29.167 cubic feet)
External Power Requirements	
Three-phase, Wye Configuration	
Voltage	103 - 128 Vrms line-to-neutral
Current	12 Amperes/phase (typically 8 Amperes with 16-Ampere surges)
Frequency	47 - 63 Hz
Power	4.32 kilowatts (1755 kW typical)

Table 1-2. PAM Test Set Reference Data--Continued

Item	Description
External Power requirements--Continued	
Single-phase Configuration	
Voltage	103 - 128 Vrms line-to-neutral
Current	33 amperes maximum (typically 15 Amperes with 23-ampere surges)
Frequency	47 - 63 Hz
Power	3.96 kilowatts (1755 kW typical)
Environmental Characteristics	
Operating	
Altitude	5,000 feet
Temperature	+15 to +32 degrees Celsius
Relative Humidity	20 percent to 80 percent noncondensing
Transportation and Storage	
Altitude	10,000 feet
Temperature	-35 to +55 degrees Celsius
Relative Humidity	10 percent to 90 percent noncondensing

Table 1-3. Equipment and Accessories Supplied

Model No./ Part No.	Description	Manufacturer	Quantity
AD421401G901	PAM Test Console Assembly	Northrop Grumman	1
AD421410G01	PAM Test Fixture Assembly	Northrop Grumman	1
AD421785G01	Self-Test Adapter Assembly	Northrop Grumman	1
AA421430G01	Compute/Controller	Northrop Grumman	1
65877AT	Computer	IBM	1
6544403	Monitor	IBM	1
07H0653	Keyboard	IBM	1
2X32-70T	Mouse	IBM	1
AD421405G01	Interface Board Assembly	Northrop Grumman	1
DT2819	Counter/Timer Board	Data Translation	1
776786-01	AT-GPIB/TNT CCA	National Instruments	1
3C509-TPO	Network Interface Card	Data Translation	1
AA421787G01	Cable Assembly, Computer Interface, Ribbon	Northrop Grumman	1
AA421787G02	Cable Assembly, Computer Interface, Ribbon	Northrop Grumman	1
PC5897K	Desk, Computer Workstation	Global	1
KC91251	Printer, Laser Jet 5MP	Hewlett Packard	1
50F6375	Cable Assembly, Printer	0AAR4	1
HP10833B	Cable Assembly, 488 Bus, 2M	Hewlett Packard	1
AD420946G01	Cable Assembly, 60-Hz External Power	Northrop Grumman	1
AD420921G02	Cable Assembly, 60-Hz Console Standby Power	Northrop Grumman	1

Table 1-3. Equipment and Accessories Supplied--Continued

Model No./ Part No.	Description	Manufacturer	Quantity
90C99001G06	Cable Assembly, Gnd, Lug/Lug	Northrop Grumman	1
AD421424G01	Cable Assembly, Preamp	Northrop Grumman	1
AD421425G01	Cable Assembly, Lookdown Driver	Northrop Grumman	1
3082-2240-00	Adapter, N Plug to OSM Jack	M/A-Com	1
2088-1230-02	Adapter, Right Angle, SMA	M/A-Com	2
3082-2241-00	Adapter, N Jack to OSM Plug	M/A-Com	1
AA421645G01	Phase Reference Assembly	Northrop Grumman	1
AA421646G01	4-Way Input Transition Assembly	Northrop Grumman	1
AA421647G01	4-Way Output Transition Assembly	Northrop Grumman	1
DD421208H01	Adapter, Tip Jack (Black)	Northrop Grumman	1
DD421208H02	Adapter, Tip Jack (Red)	Northrop Grumman	1
AA421434G06	Cable Assembly, Coaxial	Northrop Grumman	1
AA421434G07	Cable Assembly, Coaxial	Northrop Grumman	1
AA421434G08	Cable Assembly, Coaxial	Northrop Grumman	1
AA421434G09	Cable Assembly, Coaxial	Northrop Grumman	1
AA421434G10	Cable Assembly, Coaxial	Northrop Grumman	1
AA421434G11	Cable Assembly, Coaxial	Northrop Grumman	1
AA421434G12	Cable Assembly, Coaxial	Northrop Grumman	1
AA421434G13	Cable Assembly, Coaxial	Northrop Grumman	1
AD421437G01	Cable Assembly, D-Sub	Northrop Grumman	1
HPE2120C	Software, HPVEE 3.12 for Windows	Hewlett Packard	1
SFVA421789P01	Media, Test Executive Software	Northrop Grumman	1
SFVA421410P01	Media, PAM Test Software	Northrop Grumman	1

Table 1-3. Equipment and Accessories Supplied--Continued

Model No./ Part No.	Description	Manufacturer	Quantity
SFVA421424P01	Media, Preamp Test Software	Northrop Grumman	1
SFVA421425P01	Media, LDD Test Software	Northrop Grumman	1
412-230132	Coaxial Switch, TR (Spare)	DOW-KEY Microwave Corp.	1
SEM123T	Coaxial Switch, SP (Spare)	Narda	1
HP87106A	Coaxial Switch, 6 (Spare)	Hewlett Packard	1
XSEM323D	Coaxial Switch, XF (Spare)	Narda	1
F192AOPT48	Switch, PIN Diode (Spare)	General Microwave	1
JCA12-3349F	Amplifier (Spare)	JCA Technology	1
KUEP-11D15-24	Relay, DPDT 28V (Spare)	Potter and Brumfield	1
3010-100	Step Attenuator (Spare)	Lucas Aerospace	1

Table 1-4. Related Publications

Publication No.	Title	Brief Description
P52H3354	Using Your Personal Computer	Provides details for using the IBM PC
P52H3450	Installing Options in Your Personal Computer	Provides details for installing options in the IBM PC
96G2306	Color Monitor User's Guide	Provides details for using the IBM color monitor
C3150-99025	Quick Reference Guide	HP Laser Jet 5P & 5 MP; provides quick reference information
C3155-90901	Macintosh Notes	HP Laser Jet 5P & 5MP; provides user information for Macintosh
08560-90109	Calibration Guide	HP8560 E-Series Spectrum Analyzer; provides calibration information
5961-0491	Quick Reference Guide	HP8560 E-Series Spectrum Analyzer; provides quick reference information
08560-10002	Operation Verification	HP8560 E-Series Spectrum Analyzer; provides operation information on 3 1/2-in. disk
08560-90086	Front Panel Functions	HP8560 E-Series Spectrum Analyzer; provides front panel functions on a card
08560-90124	Firmware Note	HP8560 Series Spectrum Analyzer; provides firmware notes
85620-90040	Installation, Operation, Programming, and Service Guide	HP85620A Mass Memory Module; provides installation, operation, programming, and service information
85024-90001	Operating and Service Manual	HP85024A High Frequency Probe; provides operation and service information

Table 1-4. Related Publications--Continued

Publication No.	Title	Brief Description
11880-90001	Operating and Service Manual	HP11880A Probe Adapter (for High Frequency Probe HP85024A); provides operation and service information
11881-90001	Operating and Service Manual	HP11881A 10:1 Divider (for High Frequency Probe HP85024A); provides operation and service information
66000-90001	Installation Guide	HP66000A Modular Power Supply Mainframe; provides installation information
5959-3386	User's Guide	HP Series 661XXA MPS Power Modules; provides user information
5959-3362	Programming Guide	HP Series 661XXA MPS Power Modules; provides programming information
5952-0156	Tutorial Description	Provides tutorial for the Hewlett Packard Interface Bus
E2110-90032	How to Use HP VEE	HP VEE; provides use information
E2110-90033	Building an Operator Interface with HP VEE	HP VEE; provides information for building and operator interface
E2110-90035	HP VEE Reference	HP VEE; provides reference information
950601	Users Manual	PM3380A Fluke Autoranging CombiScope Instrument Provides user information
---	B-Series Reference Card	PM3380A Fluke Autoranging CombiScope Instrument; provides reference information
941001	MATH+ Users Manual	PM3380A Fluke Autoranging CombiScope Instrument; provides user information for Math +
---	Instruction Manual	PM9010 10:1 Passive Probes; provides instructions

Table 1-4. Related Publications--Continued

Publication No.	Title	Brief Description
46882-225U	Operating Manual	Marconi 520024 9 kHz - 2.4 GHz AM/FM Signal Generator; provides operating instructions
---	Operation and Maintenance Manual	Gigatronics Series 8540B Universal Power Meter; provides operation and maintenance instructions
---	Operating and Maintenance Manual	Gigatronics 80350A Series Peak Power Sensors for Peak and CW Power Measurement; provides operating and maintenance instructions
2001-900-01 Rev. E	Operator's Manual	Keithley Model 2001 Multimeter; provides operator's instructions
2001-905-01 Rev. E	Calibration Manual	Keithley Model 2001 Multimeter; provides calibration instructions
2001-903-01 Rev. B	Quick Reference Guide	Keithley Model 2001 Multimeter; provides quick reference information
2000-SCAN-901-01 Rev. B	Instruction Manual	Keithley Model 2000 Scan Card (for use in Model 2001 Multimeter); provides instructions
320796A-01	Getting Started with Your GPIB-PCII/IIA and the NI-488.2 Software for DOS	National Instruments AT-GPIB/TNT CCA; provides getting-started instructions.
320701B-01	NI-488.2 User Manual for Windows	National Instruments AT-GPIB/TNT CCA; provides Windows-user instructions.
UM -08727-B	DT2819 User Manual	Data Translation Counter/Timer Board; provides user instructions.
UM-08932-B	PACER User Manual	Data Translation Counter/Timer Board; provides user information.

Table 1-4. Related Publications--Continued

Publication No.	Title	Brief Description
UM-13750-B	DT2819 Device Driver for Microsoft Windows	Data Translation Counter/Timer Board
---	IEEE 4888.2 Documentation for DC Power Supply Series I60	Power Ten I62B-5040 Power Supply; provides documentation
---	Power Ten Product Manuals	Power Ten I62B-5040 Power Supply; product manuals on two 3 1/2-in. floppy disks
TI 6340.25	ARSR-4 System Integrated Circuit Data Instruction Book	Contains reference data for various types of commercial and MIL-Standard integrated circuits
TI 6340.56	UUTs Tested on PAM Test Set, Repair Manual	Contains test information for UUT testing using the PAM test set
T.O. 00-25-234	General Shop Practice Requirements for the Repair, Maintenance, and Test of Electrical Equipment	Includes standard shop practices for the repair and test of electrical equipment

CHAPTER 2

INSTALLATION INSTRUCTIONS

2.1 FACILITIES.- The PAM test set is designed to be operated at room ambient temperature in a depot environment suitable for the disassembly and repair of the UUTs tested. Electrostatic-discharge-protected work stations are required for disassembly of the UUTs and test set assemblies containing active semiconductor circuitry.

2.2 INSTALLATION INSTRUCTIONS.- Remove the PAM test console and the computer from their crates and unpack them, taking care not to damage the work surface edges.

2.2.1 PAM Test Console.- Eyebolts are provided on top of the PAM test console for lifting purposes. If the work surface and the anti-tip legs have been removed for shipment, install the work surface and the anti-tip legs on the PAM test console. Once the PAM test console has been positioned, adjust the leveler feet to contact the floor. Inspect the PAM test console to ensure that foreign objects have not entered connectors or the interior of the PAM test console.

2.2.2 Computer Table.- Position the computer table on the right side of the PAM test console adjacent to the peripheral interface panel. The computer table may be positioned on the opposite side of the PAM test console, if desired. The connections to the peripheral interface panel are identical regardless of where the computer table is positioned.

2.2.3 Input Power.- The PAM test set requires a source of 60-Hz input power. The computer and printer are connected to the PAM test console standby power via a dedicated connector on the peripheral interface panel.

2.2.3.1 PAM Test Console.- The PAM test console is shipped without a connector for the 60-Hz input power. The power cord termination is selected by the customer, who also supplies the mating connector. There are two input power configurations from which to choose. Connect the customer-supplied power connector to the unterminated end of cable PN AD420946G01.

2.2.3.1.1 Three-Phase Configuration.- In this configuration, the power cord is terminated for three-phase, Wye, 103- to 128-Vrms line-to-neutral, 47- to 63-Hz input power. When configured for three-phase power, each phase draws 12 Amperes maximum.

2.2.3.1.2 Single-Phase Configuration.- In this configuration, the A (black), B (red) and C (orange) connections on the power cord are connected to the same 103- to 128-Vrms line-to-neutral, 47- to 63-Hz input power. When configured for single-phase power, the PAM test set draws 33 Amperes maximum.

2.2.3.2 Ground.- Cable PN 90C99001G06 provides the connection to lug E1 of the input power bulkhead for an earth ground suitable for fault currents. Connect ring lug PN MS25036-133, of cable 90C99001G06, to the facility ground.

2.2.4 Interconnections.- The interconnections between the PAM test console, the computer/controller, printer, and facility power are shown on interconnection diagram SD421400. Additionally, the interconnection diagram shows connections between various console subassemblies required to be connected as part of installation. Connect each of the following cables as shown on interconnection diagram SD421400:

	Part No.	Cable Name
Facility power related:		
	90C99001G06	Ground Lug/Lug Cable
	AD420946G01	60-Hz External Power Cable
Console to computer/controller related:		
	AD420921G02	60-Hz Console Standby Power Cable Assembly (power strip)
	P/O Computer	Computer Line Cord
	P/O Display	Display Line Cord
	P/O Printer	Printer Line Cord
	HP10833B	2M 488 Bus Cable Assembly
	AD421437G01	D-Sub Cable Assembly
	50F6375	Printer Cable Assembly
	P/O Computer	Keyboard/Cable
	P/O Computer	Mouse/Cable
	P/O Display	Display/Cable
Console related:		
	AD421434G05	Coax Cable
	2088-1230-02	Right-angle SMA Adapter (Qty 2)
	P/O Power Meters (Qty 3)	Two Probes per Power Meter

CHAPTER 3

CONTROLS AND INDICATORS

3.1 SCOPE.- This chapter describes the controls and indicators on the custom hardware; refer to figures 3-1 through 3-4 and tables 3-1 through 3-4. Since the controls and indicators on the commercial off-the-shelf (COTS) equipment are described in the accompanying commercial manuals, controls and indicators on the COTS equipment are not covered in this manual. In addition to the PAM test console interlocks, the controls and indicators for the RF test panel, control panel, the amplifier panel, and the PAM test fixture are described in this chapter.

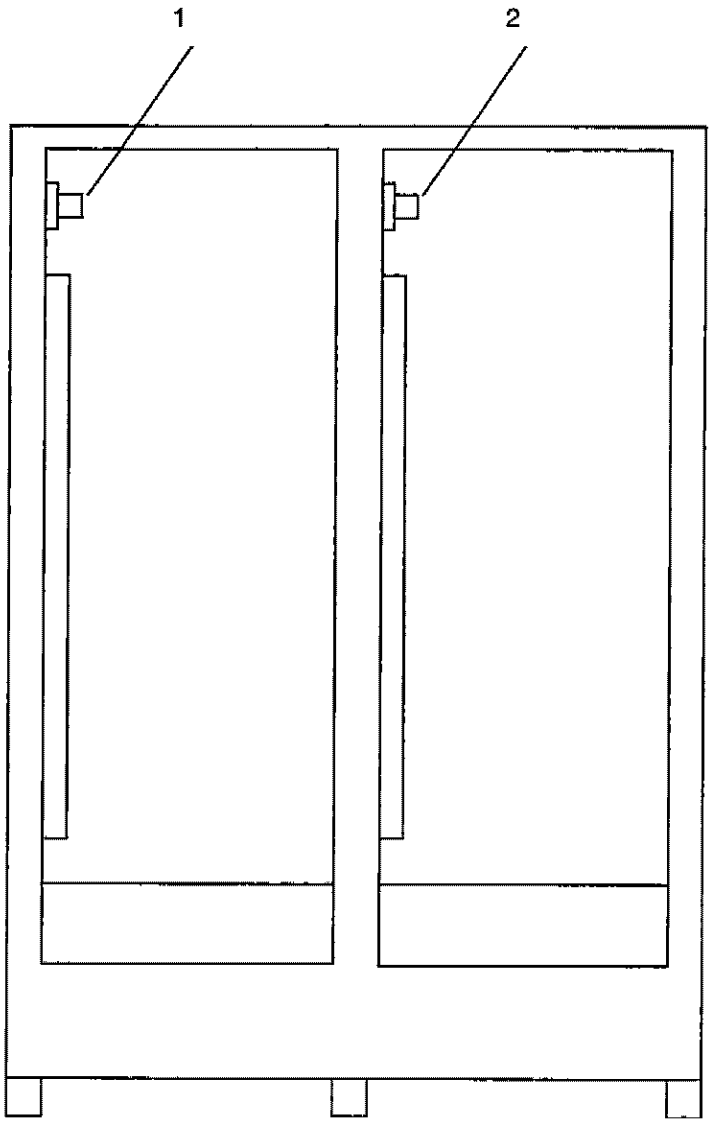

REAR VIEW

Figure 3-1. PAM Test Console

Table 3-1. PAM Test Console, Description of Controls and Indicators

Figure 3-1 Find No.	Control or Indicator	Reference Designator	Function
1	INTERLOCK plunger switch	S1	Removes all power from PAM test console when door opens. Any equipment connected to standby power remains on.
2	INTERLOCK plunger switch	S2	Removes all power from PAM test console when door opens. Any equipment connected to standby power remains on.

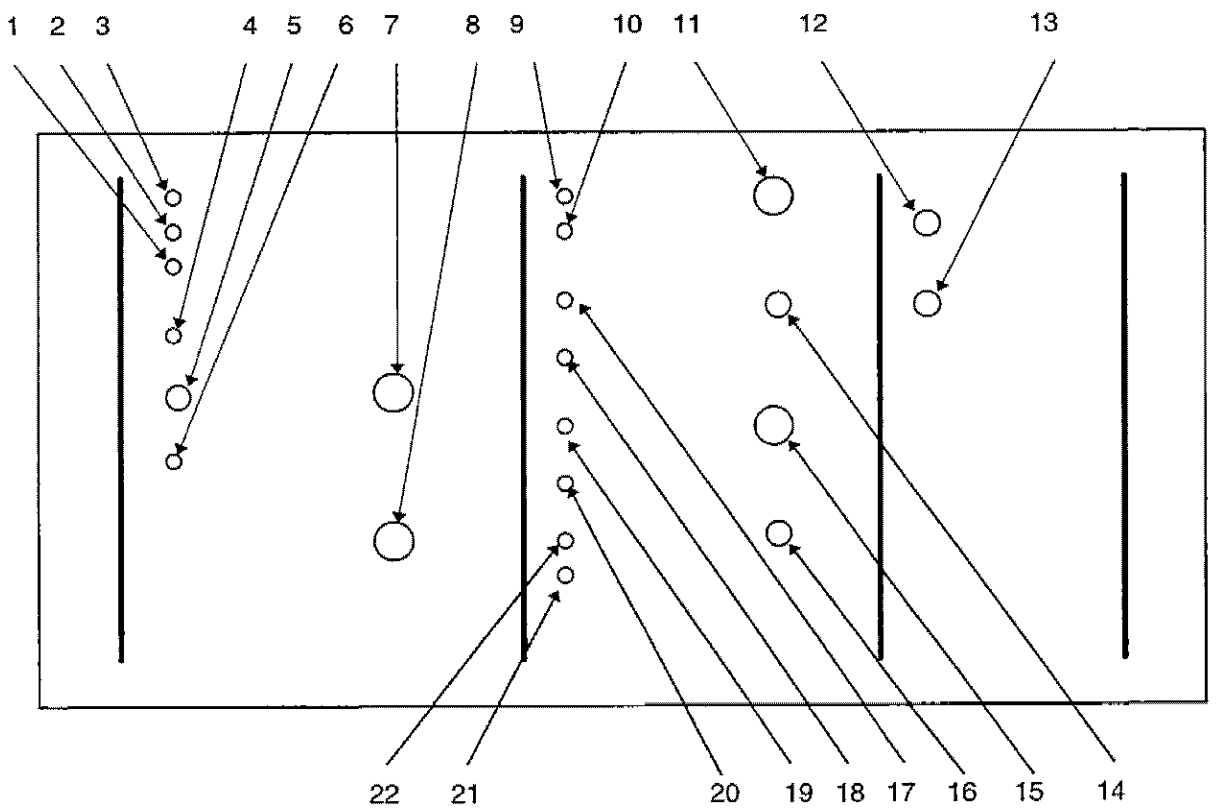

Figure 3-2. RF Test Panel

Table 3-2. RF Test Panel, Description of Controls and Indicators

Figure 3-2 Find No.	Control or Indicator	Reference Designator	Function
1	MODE-LOOKDOWN DRIVER indicator	DS3	When on indicates that the PAM test set has been configured (cabled) for lookdown driver test mode.
2	MODE-PREAMP indicator	DS2	When on indicates that the PAM test set has been configured (cabled) for preamplifier test mode.
3	MODE-POWER MODULE indicator	DS1	When on indicates that the PAM test set has been configured (cabled) for PAM test mode.
4	COUPLED INPUT-FORWARD indicator	DS4	When on indicates that the coupled input forward power is selected by computer or by operator via switch S1.
5	COUPLED INPUT-switch S1 with positions FORWARD/REMOTE /REFLECTED	S1	REMOTE (center) position turns over selection of coupled input to computer. FORWARD (up) position overrides computer and selects forward for coupled input. REFLECTED (down) position overrides computer and selects reflected for coupled input.
6	COUPLED INPUT-REFLECTED indicator	DS5	When on indicates that the coupled input reflected power is selected by the computer or the operator via switch S1.
7	COUPLED INPUT-J1 connector	J1	Provides monitor connection point for coupled input.
8	COUPLED OUTPUT-J2 connector	J2	Provides monitor connection point for coupled output.
9	HIGH POWER RF SOURCE-180W indicator	DS6	When on indicates that 180-watt high-power RF source is selected for output to lookdown driver via J3.

Table 3-2. RF Test Panel, Description of Controls and Indicators--Continued

Figure 3-2 Find No.	Control or Indicator	Reference Designator	Function
10	HIGH POWER RF SOURCE 45W indicator	DS7	When on indicates that 45-watt high-power RF source is selected for output to PAM via J3.
11	HIGH POWER RF SOURCE J3 connector	J3	Provides 180- or 45-Watt RF output to lookdown driver or PAM, respectively.
12	SPECTRUM ANALYZER J7 indicator	J7	Provides input to spectrum analyzer from preamplifier, lookdown driver, or PAM.
13	PULSE MODULATION TP1 test point	TP1	Provides monitoring of pulse modulation signal.
14	PREAMP RF SOURCE J4 connector	J4	Provides low-power RF output to preamplifier.
15	HIGH POWER MONITOR J5 connector	J5	Provides high-power monitoring of preamplifier or lookdown driver output.
16	PAM MONITOR J6 connector	J6	Provides monitoring of PAM output.
17	PREAMP RF SOURCE indicator	DS8	When on indicates that preamplifier RF source (low power) is present at J4.
18	HIGH POWER MONITOR 6 PORT indicator	DS9	When on indicates that the 6-port reflectometer is selected by the computer or the operator via switch S2 to monitor preamplifier or lookdown driver output.

Table 3-2. RF Test Panel, Description of Controls and Indicators--Continued

Figure 3-2 Find No.	Control or Indicator	Reference Designator	Function
19	HIGH POWER MONITOR switch S1 with positions 6 PORT/ REMOTE/ SPEC AN	S2	REMOTE (center) position turns over selection of high-power monitor to computer. 6 PORT (up) position overrides computer and selects 6-port reflectometer for monitoring UUT high-power output. SPEC AN (down) position overrides computer and selects spectrum analyzer for monitoring UUT high-power output.
20	HIGH POWER MONITOR SPEC AN indicator	DS10	When on indicates that the spectrum analyzer is selected by the computer or the operator via switch S2 to monitor preamplifier or lookdown driver output.
21	PAM MONITOR SPEC AN indicator	DS12	When on indicates that the spectrum analyzer is selected by the computer to the PAM.
22	PAM MONITOR 6 PORT indicator	DS11	When on indicates that the 6-port reflectometer is selected by the computer to monitor the PAM.

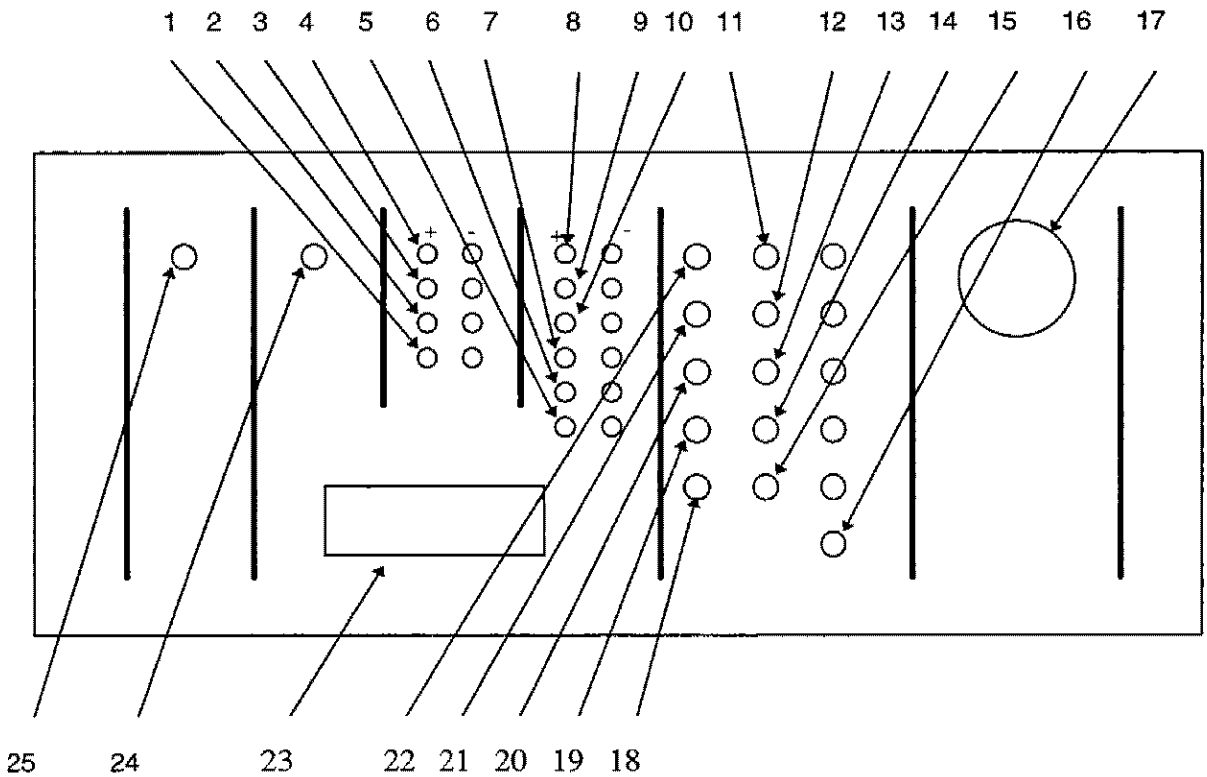

Figure 3-3. Control Panel

Table 3-3. Control Panel, Description of Controls and Indicators

Figure 3-3 Find No.	Control or Indicator	Reference Designator	Function
1	DIGITAL MONITORS		Provides monitoring of:
	DI3 + test point	TP23	+ digital output DI3 to UUT.
	DI3 - test point	TP24	- digital output DI3 to UUT.
2	DIGITAL MONITORS		Provides monitoring of:
	DI2 + test point	TP25	+ digital output DI2 to UUT.
	DI2 - test point	TP26	- digital output DI2 to UUT.
3	DIGITAL MONITORS		Provides monitoring of:
	DI1 + test point	TP27	+ digital output DI1 to UUT.
	DI1 - test point	TP28	- digital output DI1 to UUT.
4	DIGITAL MONITORS		Provides monitoring of:
	DI0 + test point	TP29	+ digital output DI0 to UUT.
	DI0 - test point	TP30	- digital output DI0 to UUT.

Table 3-3. Control Panel, Description of Controls and Indicators--Continued

Figure 3-3 Find No.	Control or Indicator	Reference Designator	Function
5	DIGITAL SOURCES		Provides monitoring of:
	DO5 + test point	TP21	+ digital output DO5 to UUT.
	DO5 - test point	TP22	- digital output DO5 to UUT.
6	DIGITAL SOURCES		Provides monitoring of:
	DO4 + test point	TP19	+ digital output DO4 to UUT.
	DO4 - test point	TP20	- digital output DO4 to UUT.
7	DIGITAL SOURCES		Provides monitoring of:
	DO3 + test point	TP17	+ digital output DO3 to UUT.
	DO3 - test point	TP18	- digital output DO3 to UUT.
8	DIGITAL SOURCES		Provides monitoring of:
	DO0 + test point	TP11	+ digital output DO0 to UUT.
	DO0 - test point	TP12	- digital output DO0 to UUT.
9	DIGITAL SOURCES		Provides monitoring of:
	DO1 + test point	TP13	+ digital output DO1 to UUT.
	DO1 - test point	TP14	- digital output DO1 to UUT.
10	DIGITAL SOURCES		Provides monitoring of:
	DO2 + test point	TP15	+ Digital output DO2 to UUT.
	DO2 - test point	TP16	- Digital output DO2 to UUT.
11	POWER SUPPLY MONITORS		Provides monitoring of:
	+5V + test point	TP1	+5-Volt power supply.
	+5V - test point	TP2	+5-Volt power supply return.
12	POWER SUPPLY MONITORS		Provides monitoring of:
	+15V + test point	TP3	+15-Volt power supply.
	+15V - test point	TP4	+15-Volt power supply return.
13	POWER SUPPLY MONITORS		Provides monitoring of:
	-15V + test point	TP5	-15-Volt power supply return.
	-15V - test point	TP6	-15-Volt power supply.

Table 3-3. Control Panel, Description of Controls and Indicators--Continued

Figure 3-3 Find No.	Control or Indicator	Reference Designator	Function
14	POWER SUPPLY MONITORS		Provides monitoring of:
	+33V + test point	TP7	+33-Volt power supply.
	+33V - test point	TP8	+33-Volt power supply return.
15	POWER SUPPLY MONITORS		Provides monitoring of:
	+40V + test point	TP9	+40-Volt power supply.
	+40V - test point	TP10	+40-Volt power supply return.
16	POWER SUPPLY MONITORS		
	GND test point	TP31	Provides ground.
17	EMERGENCY OFF mushroom switch	S3	Removes all power from PAM test set.
18	POWER SUPPLY MONITORS		
	+40V LED	DS5	When lit, indicates that +40-Volt power supply is on.
19	POWER SUPPLY MONITORS		
	+33V LED	DS4	When lit, indicates that +33-Volt power supply is on.
20	POWER SUPPLY MONITORS		
	-15V LED	DS3	When lit, indicates that -15-Volt power supply is on.
21	POWER SUPPLY MONITORS		
	+15V LED	DS2	When lit, indicates that +15-Volt power supply is on.

Table 3-3. Control Panel, Description of Controls and Indicators--Continued

Figure 3-3 Find No.	Control or Indicator	Reference Designator	Function
22	POWER SUPPLY MONITORS +5V LED	DS1	When lit, indicates that +5-Volt power supply is on.
23	J1 connector	J1	Provides connection to UUT.
24	BLOWER ON/LOW POWER/OFF 3- position switch	S2	ON position applies power to PAM test set blowers for UUT cooling. OFF position removes power from test set blowers for UUT cooling. LOW POWER position allows low power testing with UUT not in fixture for cooling.
25	UUT POWER UUT ON/STBY/OFF 3- position switch	S1	ON position applies power to UUT, amplifier panel, and RF test panel coax relays. STBY (standby) position applies power only to amplifier panel and RF test panel coax switches. OFF position removes power from UUT, amplifier panel and RF test panel coax switches.

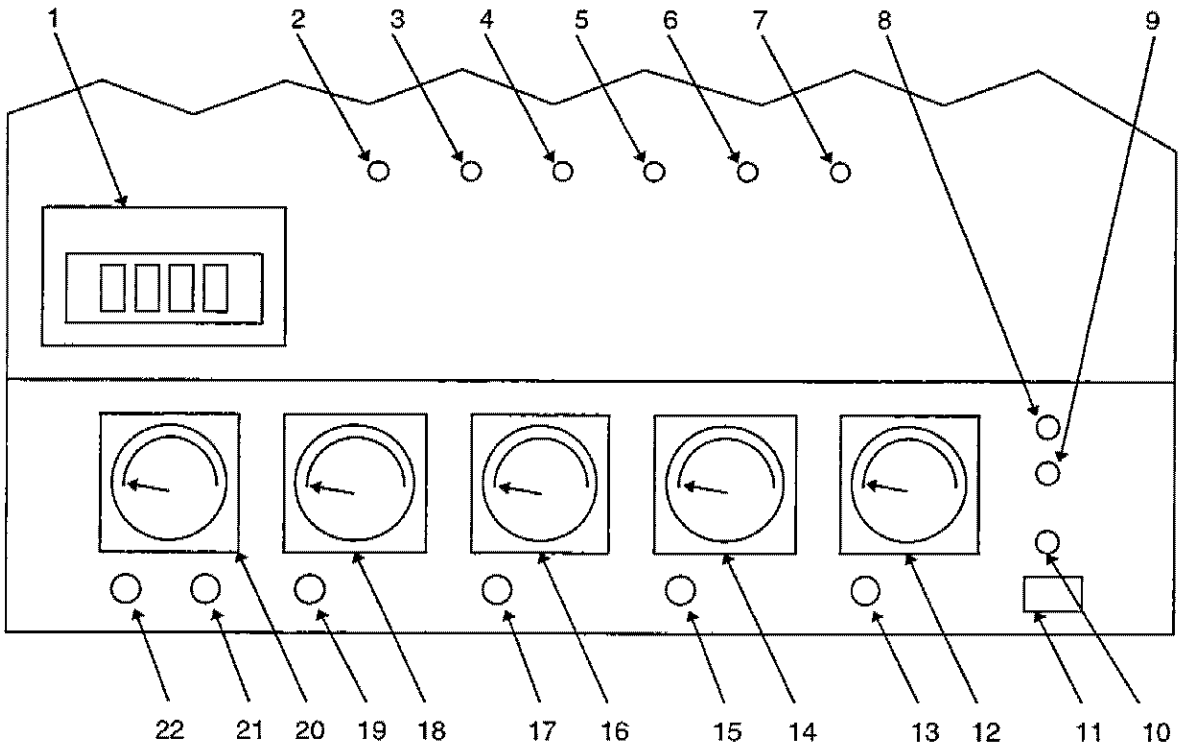

Figure 3-4. PAM Test Fixture

Table 3-4. PAM Test Fixture, Description of Controls and Indicators

Figure 3-4 Find No.	Control or Indicator	Reference Designator	Function
1	Temperature indicator	M6	Indicates UUT substrate temperature when THERMAL switch S3 is set to on (fans running).
2	Test point TP1 (red)	TP1	Connection point to connect PAM test fixture capacitor C1 to PAM for testing PAM transistor Q1 with capacitor bank removed.
3	Test point TP2 (red)	TP2	Connection point to connect PAM test fixture capacitor C2 to PAM for testing PAM transistor Q2 with capacitor bank removed.

Table 3-4. PAM Test Fixture, Description of Controls and Indicators--Continued

Figure 3-4 Find No.	Control or Indicator	Reference Designator	Function
4	Test point TP3 (red)	TP3	Connection point to connect PAM test fixture capacitor C3 to PAM for testing PAM transistor Q3 with capacitor bank removed.
5	Test point TP4 (red)	TP4	Connection point to connect PAM test fixture capacitor C4 to PAM for testing PAM transistor Q4 with capacitor bank removed.
6	Test point TP5 (red)	TP5	Connection point to connect PAM test fixture capacitor C5 to PAM for testing PAM transistor Q5 with capacitor bank removed.
7	Test point TP6 (black)	TP6	Connection point to connect PAM test fixture ground to PAM ground for testing with PAM capacitor bank removed.
8	THERMAL LED	DS2	Indicates when THERMAL switch S3 is set on turning PAM test fixture fans on and enabling temperature indicator M6.
9	THERMAL PUSH ON/OFF switch	S3	Controls PAM test fixture fans and temperature indicator M6.
10	CURRENT LED	DS1	Indicates when CURRENT switch is set on enabling current meters M1 through M5 for the purpose of testing PAM transistors Q1 through Q5 with capacitor bank removed.
11	CURRENT PUSH ON/OFF switch	S1, S2	Enables current meters M1 through M5 for the purpose of testing PAM transistors Q1 through Q5 with capacitor bank removed.

Table 3-4. PAM Test Fixture, Description of Controls and Indicators--Continued

Figure 3-4 Find No.	Control or Indicator	Reference Designator	Function
12	CURRENT METER M5	M5	When enabled by CURRENT PUSH ON/OFF switch and PAM test fixture capacitors are connected to PAM, indicates current through PAM test fixture capacitor C5.
13	Fuse F5	F5	Provides fuse protection for current meter M5.
14	CURRENT METER M4	M4	When enabled by CURRENT PUSH ON/OFF switch and PAM test fixture capacitors are connected to PAM, indicates current through PAM test fixture capacitor C4.
15	Fuse F4	F4	Provides fuse protection for current meter M4.
16	CURRENT METER M3	M3	When enabled by CURRENT PUSH ON/OFF switch and PAM test fixture capacitors are connected to PAM, indicates current through PAM test fixture capacitor C3.
17	Fuse F3	F3	Provides fuse protection for current meter M3.
18	CURRENT METER M2	M2	When enabled by CURRENT PUSH ON/OFF switch and PAM test fixture capacitors are connected to PAM, indicates current through PAM test fixture capacitor C2.
19	Fuse F2	F2	Provides fuse protection for current meter M2.

Table 3-4. PAM Test Fixture, Description of Controls and Indicators--Continued

Figure 3-4 Find No.	Control or Indicator	Reference Designator	Function
20	CURRENT METER M1	M1	When enabled by CURRENT PUSH ON/OFF switch and PAM test fixture capacitors are connected to PAM, indicates current through PAM test fixture capacitor C1.
21	Fuse F1	F1	Provides fuse protection for current meter M1.
22	Fuse F6	F6	Provides fuse protection for PAM with capacitor bank removed.

CHAPTER 4

THEORY OF OPERATION

4.1 SCOPE.- The PAM test set contains the necessary stimulus, measurement, switching, and control capability to perform functional tests, failure detection, and fault isolation tests for the lookdown drivers, preamplifiers, and power amplifier modules (PAMs) for the ARSR-4 system. A functional block diagram of the PAM test set is shown in figure 4-1. Part of the PAM test set is commercial off-the-shelf (COTS) equipment and the rest is custom hardware designed to perform the testing of the lookdown drivers, preamplifiers, and PAMs. The custom hardware is shown in gray tone on figure 4-1. In the PAM test set, the COTS equipment is linked to the computer/controller by a standard IEEE-488 general purpose interface bus (GPIB) via the peripheral interface panel. A custom interface board inside the COTS computer/controller links the computer/controller to the PAM test console and UUTs. This chapter provides theory of operation of the custom hardware in the PAM test set and the diagnostic system software.

4.2 CUSTOM HARDWARE.- In the PAM test console, the custom hardware consists of the RF test panel, the amplifier panel, 6-port reflectometer, control panel and peripheral interface panel. The COTs computer/controller has been custom configured with COTS boards and contains a custom-built interface board. Additionally, custom hardware for interfacing to the UUTs to the console consisting of PAM test fixture (for testing the PAM UUT) and cabling are provided. The interface board and related circuits in the test set are described first to aid in understanding how the test set functions.

4.2.1 Interface Board.- The interface board provides the interface between the computer/controller and the PAM test console and UUT. A functional block diagram of the PAM test set interface is shown in figure 4-2. Because the interface board functions in conjunction with components on the RF test panel and control panel, figure 4-2 and the following paragraphs describe the complete interface function including the applicable circuits on the RF test panel and control panel.

4.2.1.1 UUT Identification.- When the applicable UUT adapter cable or PAM test fixture is connected to the control panel, a hardwired ground is applied to one of three signals: PRECBL (preamplifier cable), LDCBL (lookdown driver cable) or PAMCBL (PAM cable).

4.2.1.1.1 PAM.- When signal PAMCBL goes low, indicating that the PAM test fixture has been connected to the control panel, the signal passes through two isolation diodes enabling signals K1CTL and K3CTL (relay K1 control and relay K3 control, respectively). The signal also goes to the interface board where, after passing through a buffer, it becomes DTIN7. Signal DTIN7 is routed to the control and timing board in the computer/controller to indicate to the software program the physical UUT test configuration. Signal K1CTL is routed to the RF test panel energizing relays K1 and K2. The effect of K1 being energized routes the RF input signal to the amplifier panel for high-power amplification. The effect of K2 being energized routes the appropriate reference signal to the 6-port reflectometer. Signal K3CTL is routed to the RF test panel energizing relay K3. The effect of K3 being energized puts a 6-dB attenuator in series with amplifier panel output for PAM

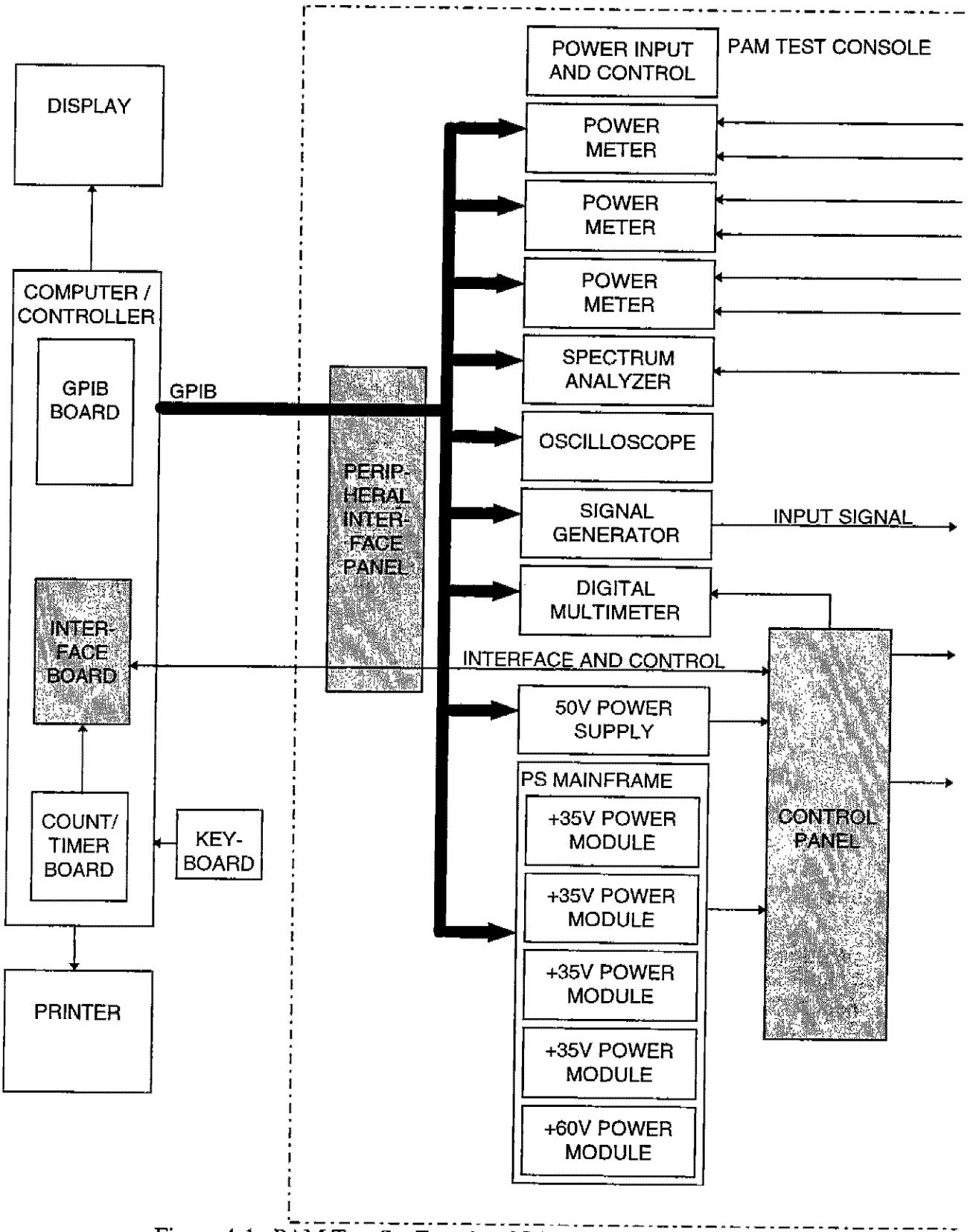

Figure 4-1. PAM Test Set Functional Block Diagram (Sheet 1 of 2)

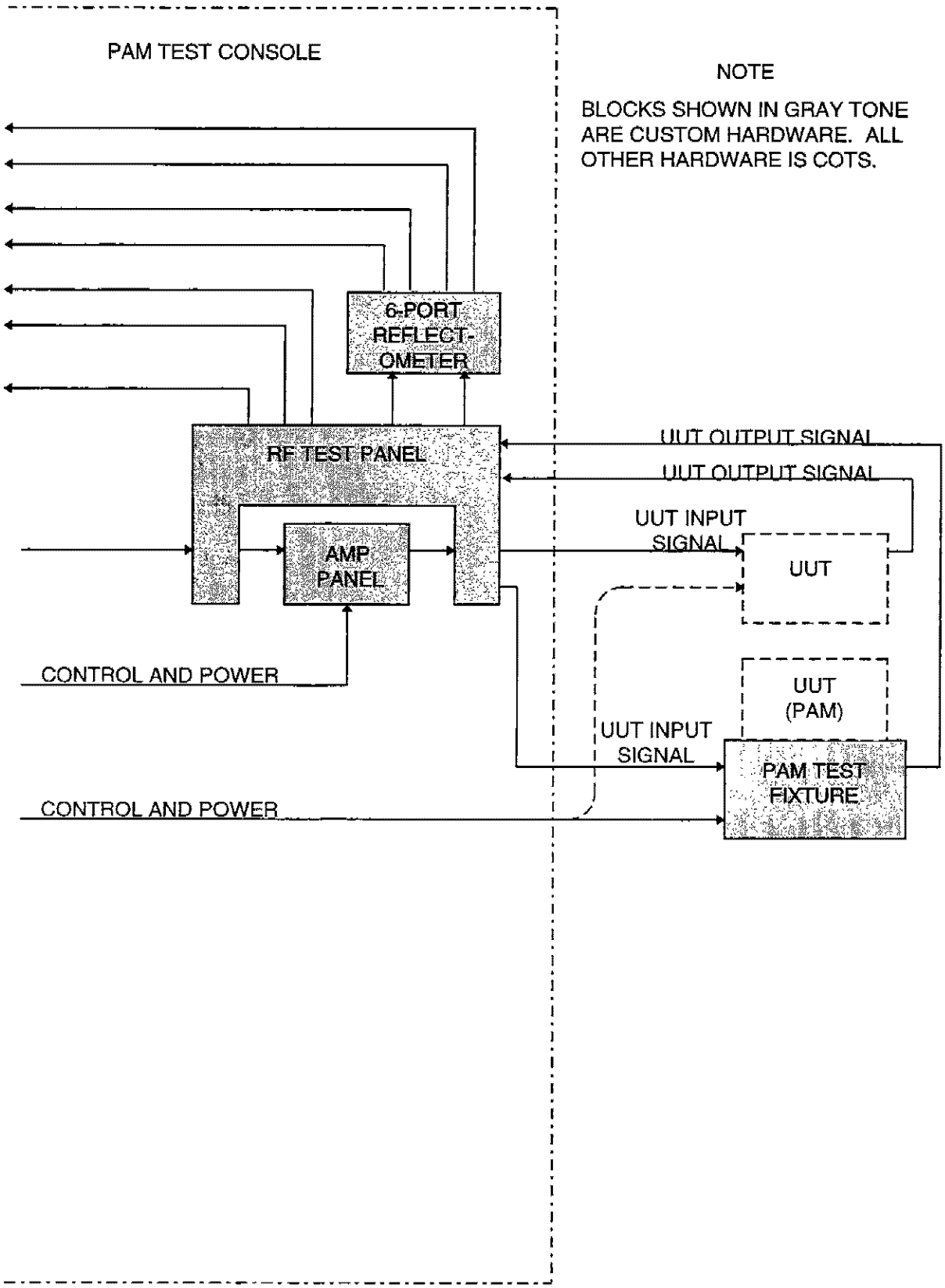

Figure 4-1. PAM Test Set Functional Block Diagram (Sheet 2 of 2)

testing. Additionally, K1CTL is routed to amp panel power control circuit enabling +5V, +15V, +33V, and +40V to the amplifier panel.

4.2.1.1.2 Lookdown Driver.- When signal LDCBL goes low indicating that the lookdown driver cable has been connected to the control panel, the signal passes through one isolation diode enabling signal K1CTL. The signal also goes to the interface board where, after passing through a buffer, it becomes DTIN6. Signal DTIN6 is routed to the control and timing board in the computer/controller to indicate to the software program the physical UUT test configuration. Signal K1CTL is routed to the RF test panel energizing relays K1 and K2. The effect of K1 being energized routes the RF input signal to the amplifier panel for high-power amplification. The effect of K2 being energized routes the appropriate reference signal to the 6-port reflectometer. Additionally, K1CTL is routed to amp panel power control circuit enabling +5V, +15V, +33V, and +40V to the amplifier panel.

4.2.1.1.3 Preamplifier.- When signal PRECBL goes low, indicating that the preamplifier cable has been connected to the control panel, the signal goes to the interface board where, after passing through a buffer, it becomes DTIN5. Signal DTIN5 is routed to the control and timing board in the computer/controller to indicate to the software program the physical UUT test configuration. Signal DTIN5 is also routed to the K4 control circuit so that when coupled input selections are made by relay K4 in the RF test panel, the relay selects preamplifier coupled input signals. No selection is necessary for relays K1 through K3 in the RF test panel because the deenergized state of these relays is the correct signal path for the preamplifier UUT.

4.2.1.2 Interlock Logic.- The interlock logic circuit on the interface board monitors inputs from six signals from various parts of the PAM test set and, based on the condition of these signals, inhibits or enables the pulsed RF control circuit, the power ten power supply control circuit and the HP power supplies via the RI (remote inhibit) signal. The six signals are as follows:

DTOUT5	High indicates computer power control enabled
UUTPWR	High indicates control panel UUT ON/STBY/OFF switch is set to ON
OVERRIDE	High indicates control panel BLOWER ON/LOW POWER/OFF switch is set to OFF
IMON	High indicates high current output from power ten power supply
DI3	High indicates UUT overtemperature fault
COOLFLT	High indicates fault from blower back pressure switch in console or test fixture

If no faults are present (DI3 and COOLFLT low) and both DTOUT5 and UUTPWR are enabled, the interlock logic circuit allows signal RI to go high enabling the pulsed RF control circuit, the HP power supplies, and the power ten power supply. However, if the operator operates the test set without the blowers (for diagnostic purposes), he may set the BLOWER switch on the control panel to OFF enabling the OVERRIDE signal. The interlock logic circuit then allows the test set to operate with the DI3 and COOLFLT signals enabled provided that the IMON signal is not enabled. If the IMON signal is enabled indicating that the test set is operating in the high-power mode, the interlock logic circuit disables the RI signal disabling the pulsed RF control circuit, the HP power supplies, and the power ten power supply.

4.2.1.3 Automatic Mode of Operation. Since operation of the test set is intended to be automatic, the interface board and associated circuitry on the RF test panel and control panel are configured so that minimal operator interaction is required. The following paragraphs describe the automatic interface functions.

4.2.1.3.1 6-Port Reflectometer/Spectrum Analyzer Selection. The 6-port reflectometer/spectrum analyzer selection is performed by the computer/controller software via the DTOUT7 signal. Relay K5 is hardwired to both UUT sources and both measurement sources. When relay K5 is deenergized, PAM RF input is routed to the spectrum analyzer, and the preamplifier/lookdown driver input is routed to the 6-port reflectometer. Energizing relay K5 swaps the measurement sources so that the PAM RF input is now connected to the 6-port reflectometer and the preamplifier/lookdown driver input is now connected to the spectrum analyzer. The software program, knowing the type of UUT being tested, knows the state of relay K5 necessary for the test to be performed. When the software program energizes relay K5, the DTOUT7 signal on the counter/timer board is switched high. The high DTOUT7 signal is routed through the interface board where it is renamed K5CTL (K5 control), and routed through the control panel to the RF test panel. On the RF test panel, the active K5CTL signal is routed through the normally-closed contacts of 6 PORT/REMOTE/SPEC AN switch [switch in REMOTE (center) position] to relay K5 control. Relay K5 becomes enabled swapping the measurement devices. Indicator lights on the RF test panel show the functional state of the relay.

4.2.1.3.2 Coupled Input Selection.- The coupled input can take the form of either forward (incident) or reflected. Because there are two distinct paths through the RF test panel (one path for the preamplifier UUT and one path for the PAM and lookdown driver UUTs), one of four possible inputs are available for selection: preamplifier-forward, preamplifier-reflected, PAM/lookdown driver-forward and PAM/lookdown driver-reflected. All four coupled inputs are routed to relay K4. The K4 control circuit on the interface board monitors the DTIN5 signal from the UUT identification circuitry and based on the state of the signal, knows which path is being tested. If the software program performs forward testing of the coupled input, the DTOUT6 signal on the counter/timer board is switched active. The active DTOUT6 signal is routed through the interface board and control panel to the RF test panel. At the RF test panel, the active DTOUT6 signal is routed through the normally-closed contacts of COUPLED INPUT FORWARD/REMOTE/REFLECTED switch S1 [Switch in REMOTE (center) position] where the signal name changes to FWDREF. The active FWDREF signal is then routed back through the control panel to the interface board to the K4 control circuit. The K4 control circuit, knowing the type of UUT being tested and the type of test being requested (forward), sends a four-output multiplex signal (MUX1-4) through the control panel to relay K4 in the RF test panel. Relay K4 selects the appropriate coupled input and routes the signal to the peak power meter.

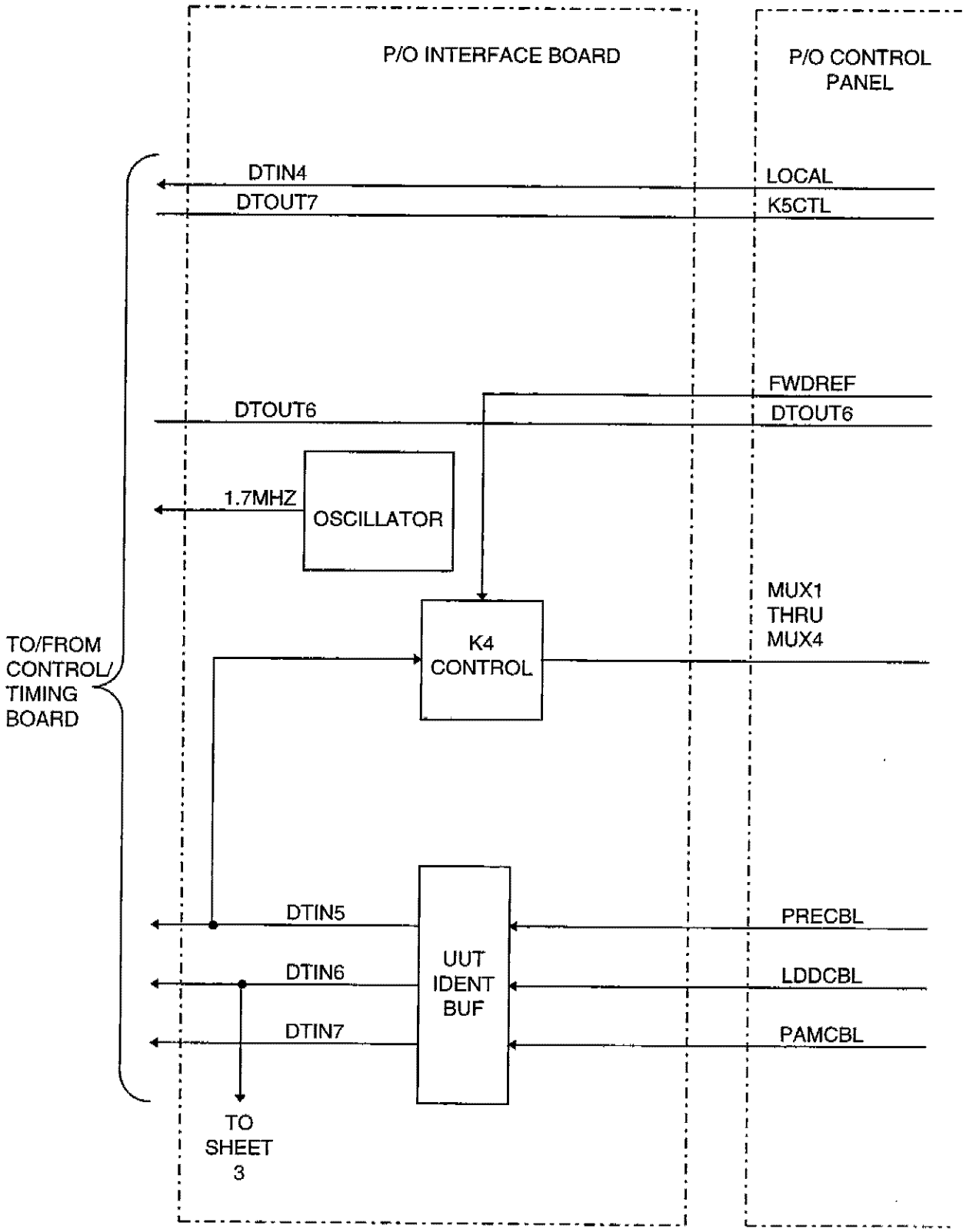

Figure 4-2. PAM Test Set Interface Functional Block Diagram (Sheet 1 of 6)

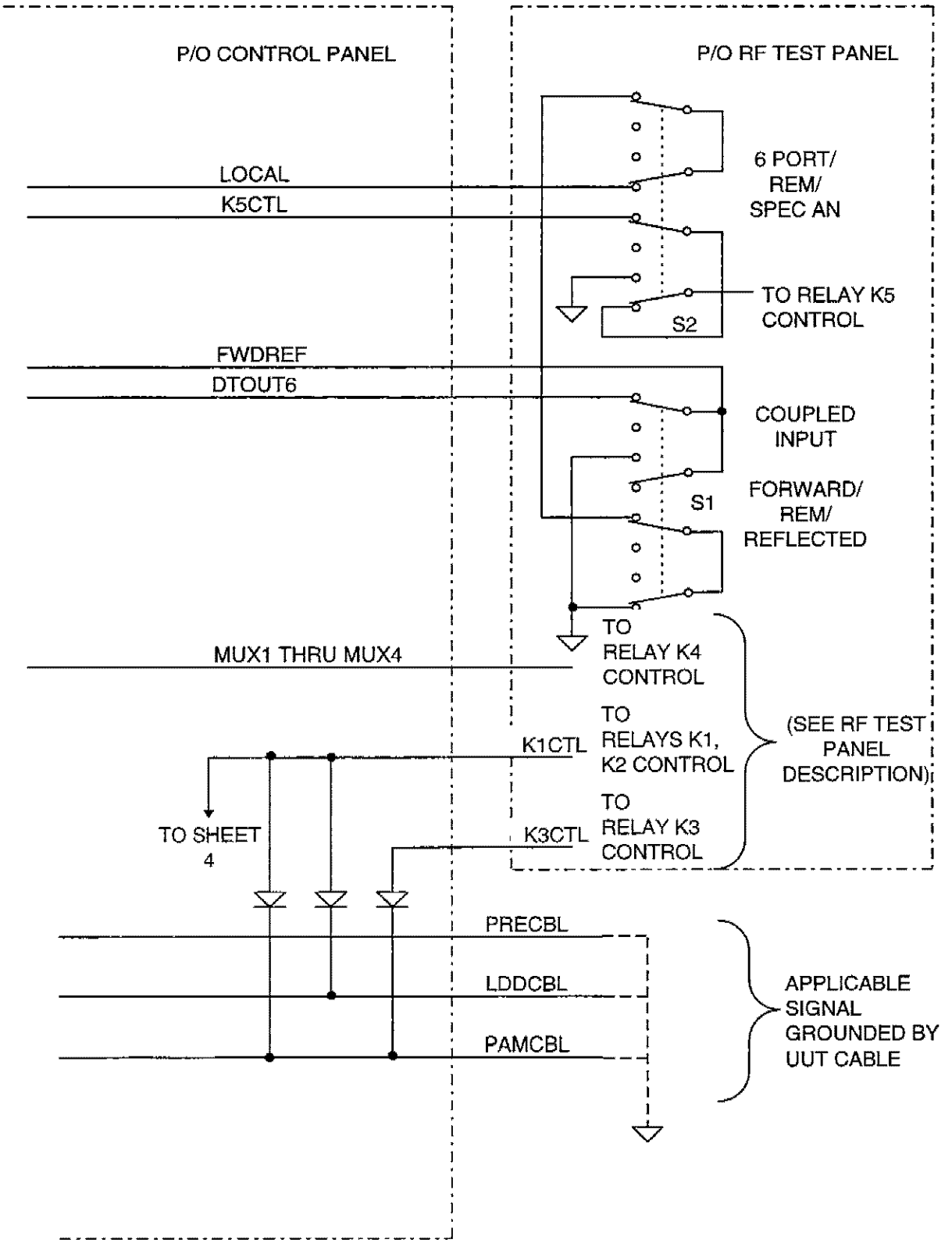

Figure 4-2. PAM Test Set Interface Functional Block Diagram (Sheet 2 of 6)

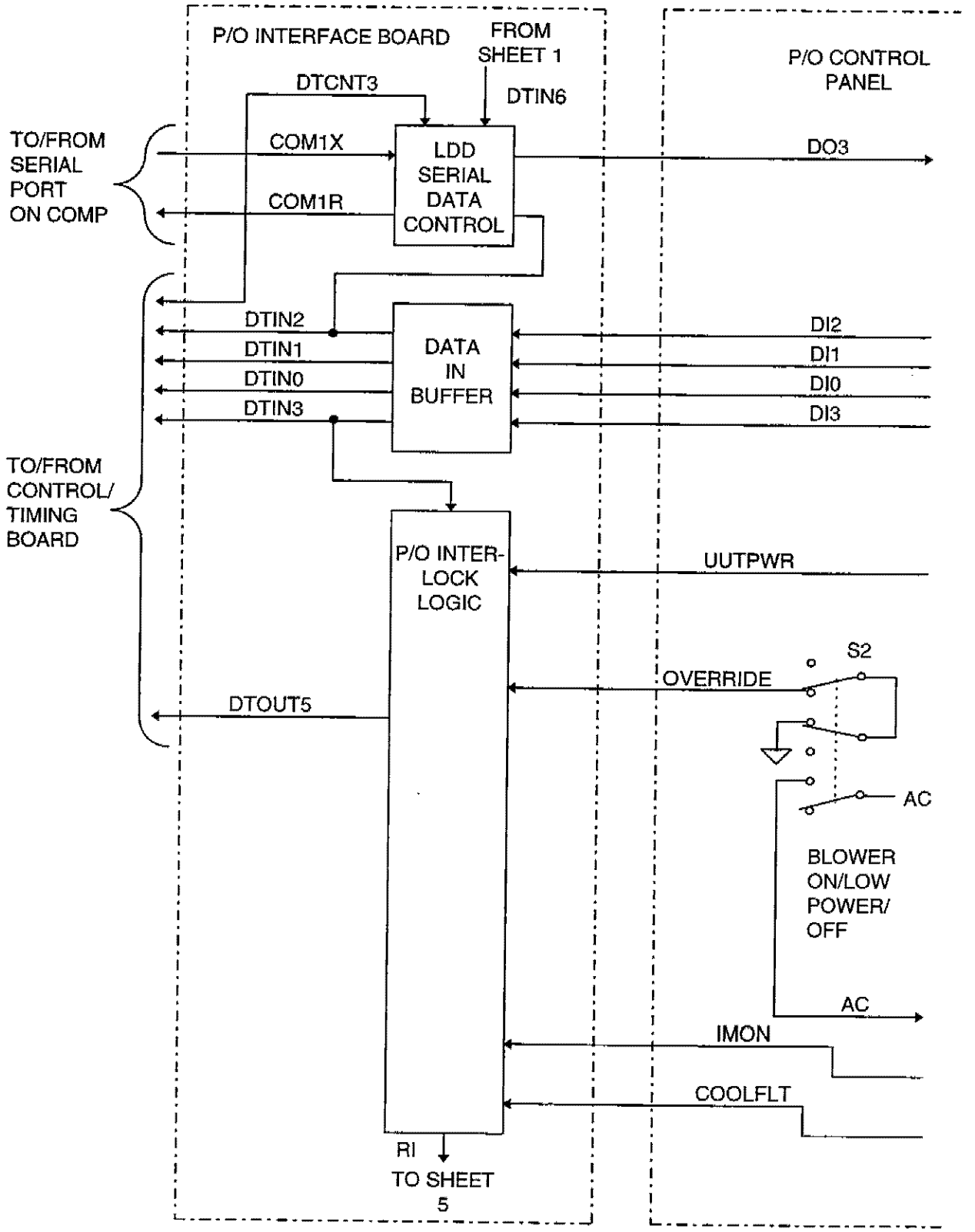

Figure 4-2. PAM Test Set Interface Functional Block Diagram (Sheet 3 of 6)

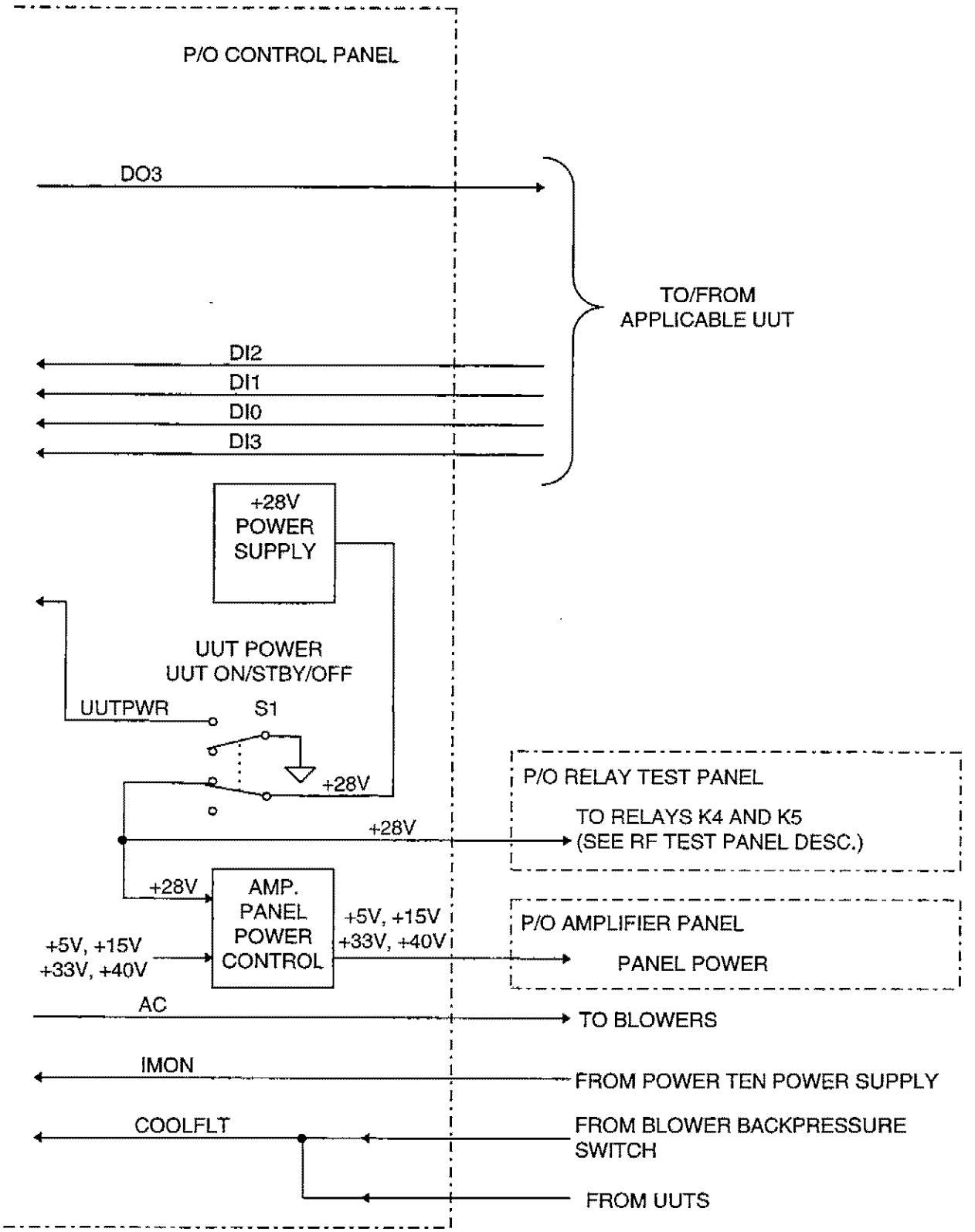

Figure 4-2. PAM Test Set Interface Functional Block Diagram (Sheet 4 of 6)

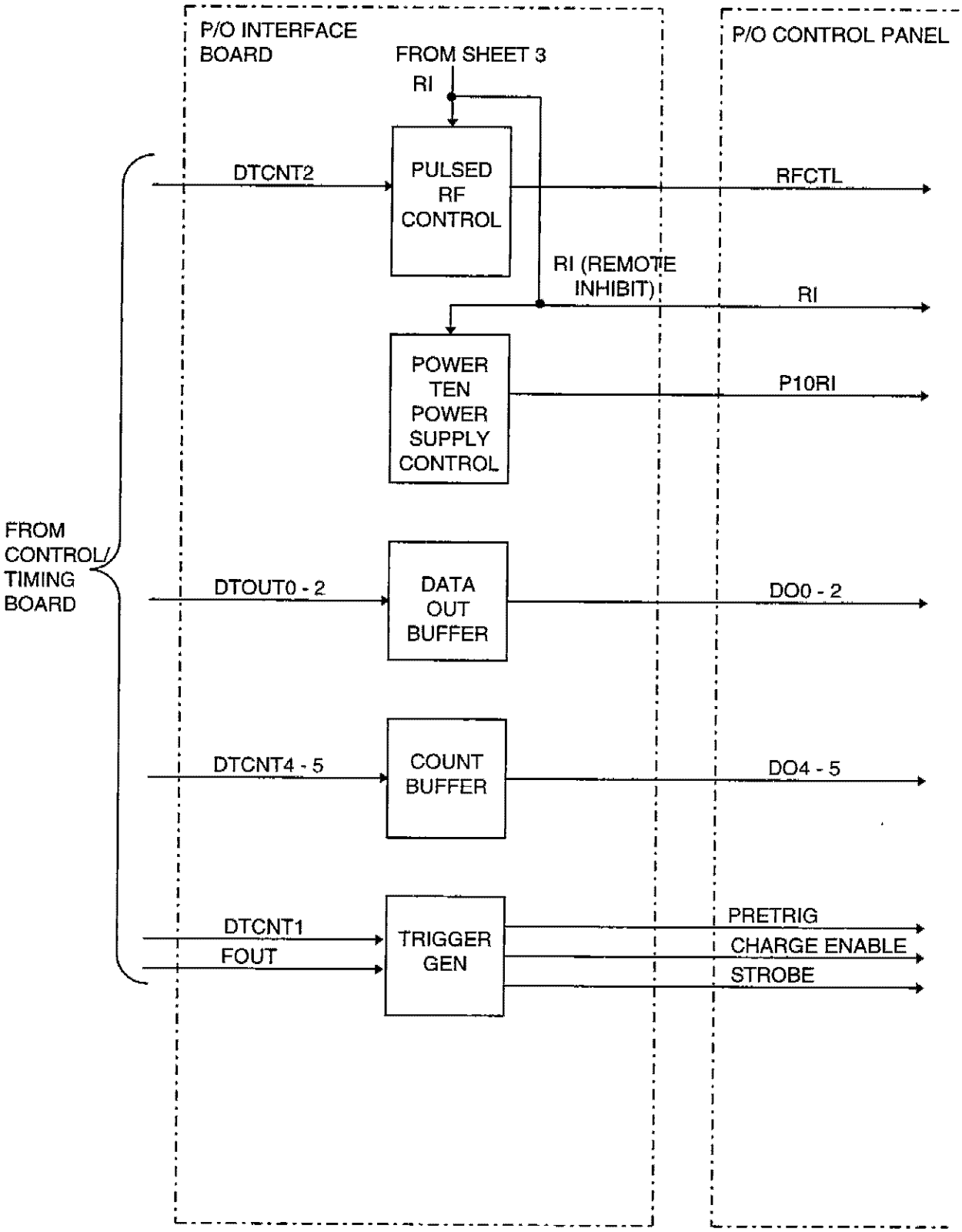

Figure 4-2. PAM Test Set Interface Functional Block Diagram (Sheet 5 of 6)

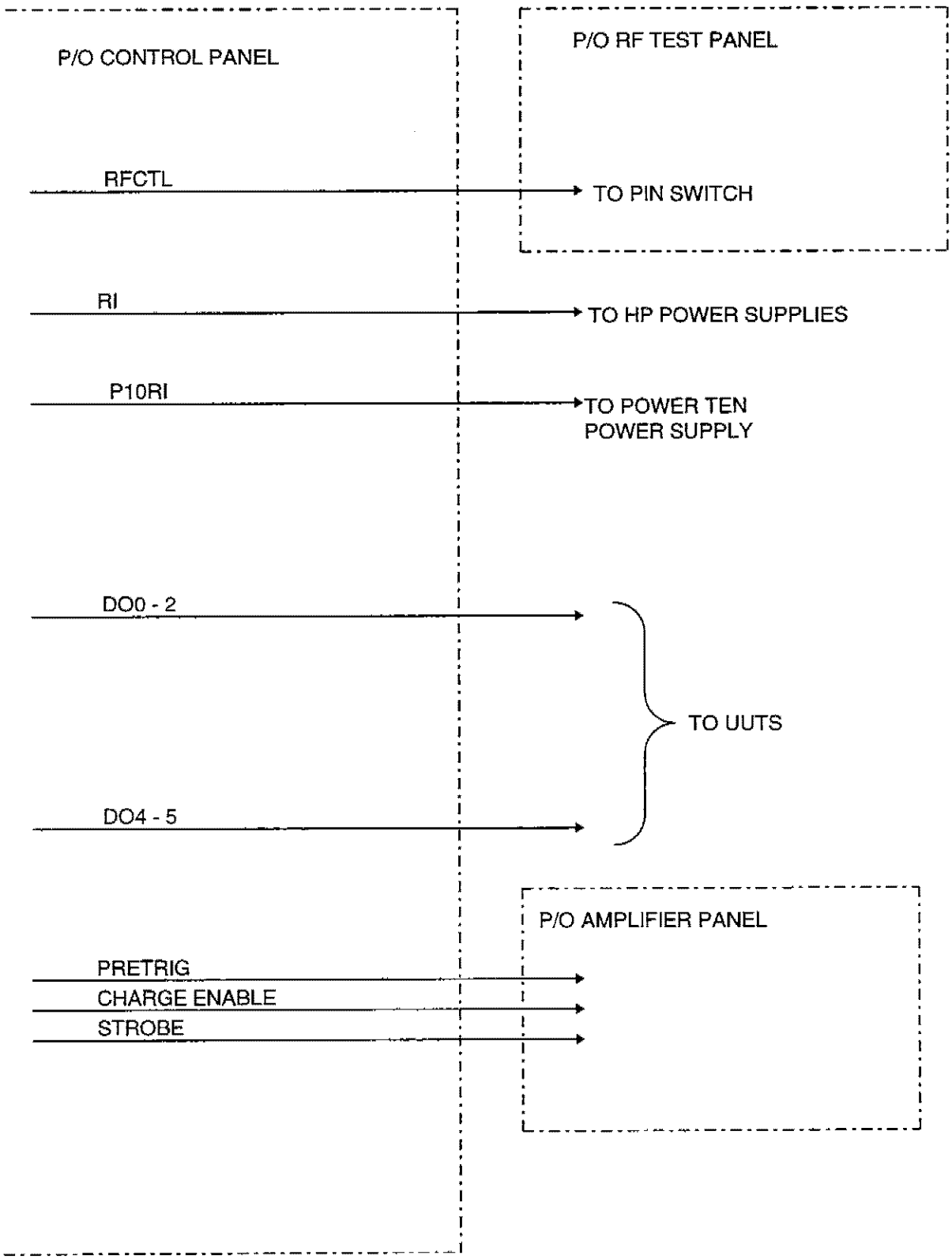

Figure 4-2. PAM Test Set Interface Functional Block Diagram (Sheet 6 of 6)

4.2.1.3.3 Data Flow.- Data flow from the computer/controller to the UUT and/or PAM test console leaves the counter/timer board as the DTOUT0-2 signals. From the counter/timer board, DTOUT0-2 is routed to data out buffer on the interface board. The data out buffer, after buffering the signals, routes the signals to the control panel as the DO0-2 signals. The control panel then routes DO0-2 to the UUT. Data flowing from the UUT to the computer/controller leaves the UUT as DI0-3 and is routed through the control panel to the data in buffer circuit on the interface board. The data in buffer, after buffering the signals, routes the signals to the counter/timer board as the DTIN0-3 signals.

4.2.1.3.4 Pulsed RF Generation.- The computer/controller generates the pulsed RF waveform on the counter/timer board as the DTCNT2 signal and routes the signal to the pulsed RF control circuit on the interface board. The pulsed RF control circuit, upon receiving the RI (remote inhibit) enable signal from the interlock logic circuit, generates the RFCTL signal waveform. The RFCTL signal waveform is routed through the control panel to the PIN switch on the RF test panel. The PIN switch then modulates the RF signal via the RFCTL signal waveform.

4.2.1.3.5 Amplifier Panel Trigger Generation.- The counter/timer board in the computer/controller generates a DTCNT1 signal and FOUT enable and routes these signals to the trigger generator in the interface board. The trigger generator circuit, in turn, produces the PRETRIG, CHARGE ENABLE, and STROBE signals which are required to amplify the RF IN signal by the amplifier panel.

4.2.1.3.6 Lookdown Driver Serial Data Control.- Testing of the lookdown driver UUT requires that serial data be transferred in both directions between the UUT and the computer/controller. Data to and from the computer/controller is routed to the LDD serial data control circuit on the interface board via the computer serial port as signals COM1R and COM1X, respectively. The LDD serial data control circuit also receives the DTIN6 signal, indicating that the lookdown driver UUT is being tested, and receives the DTCNT3 signal from the counter/timer board for data transmit control. Serial data from the computer/controller to the UUT exits the serial port of the computer/controller on COM1X signal and is routed to the LDD serial data control circuit on the interface board. The LDD serial data control circuit outputs the serial data on the DO3 data output line through the control panel to the UUT. Serial data from the UUT to the computer/controller leaves the UUT on the DI2 data input line and is routed through the control panel to the data in buffer on the interface board. The data in buffer outputs the serial data on the DTIN2 data input line to the LDD serial data control circuit. The ldd serial data control circuit outputs the serial data to the serial port of the computer/controller on signal COM1R.

4.2.1.3.7 1.7-MHz Oscillator Circuit.- The 1.7-MHZ oscillator circuit on the interface board produces a 1.7-MHz output that is sent to the counter/timer board.

4.2.1.4 Operator-Initiated Operation.- Operator-initiated operation is limited to changing switch positions on the control panel and RF test panel. The control panel switches are usually set during UUT test setup but may also be repositioned during diagnostics. The RF test panel switches are normally left in REMOTE (center) position indicating that the switch function is controlled by the computer/controller. The following paragraphs describe the operator-initiated operations.

4.2.1.4.1 6-Port/Spectrum Analyzer Monitor Selection.- The 6 PORT/REMOTE/SPEC AN switch on the RF test panel is normally set to the REMOTE (center) position which turns over control of monitor selection via relay K5 to the computer/controller. With the switch in the center position, the DTOUT7 signal from the counter/timer board in the computer/controller is routed through the interface board and control panel as K5CTL (K5 control) to the RF test panel. In the RF test panel, K5CTL is routed through two sets of closed contacts of the switch to relay K5 control. The computer then controls relay K5 by switching the K5CTL signal high or low. Indicator lights on the RF test panel show the K5 position (HIGH POWER MONITOR 6 PORT, HIGH POWER MONITOR SPEC AN, PAM MONITOR 6 PORT, and PAM MONITOR SPEC AN). Assuming that the PAM UUT is being tested and the computer/controller has selected the spectrum analyzer as the monitor device, K5CTL will be low deenergizing relay K5; the PAM MONITOR SPEC AN indicator and HIGH POWER MONITOR 6 PORT indicator will be lit. If the switch is moved to the up position, applying a ground to K5CTL, relay K5 state will not change because the relay is already deenergized. If the switch is moved to the down position, opening K5CTL, the relay control sees a high energizing K5, turning off the PAM MONITOR SPEC AN indicator and HIGH POWER MONITOR 6 PORT indicator, and turning on the PAM MONITOR 6 PORT indicator and HIGH POWER MONITOR SPEC AN indicator. The other possible selections for the PAM and high-power monitor function in a similar manner. Additionally, any time the switch is positioned away from center position, the LOCAL signal is switched high. The high LOCAL signal is routed through the control panel to the interface board in the computer/controller. The interface board routes the high LOCAL signal to the counter/timer board as DTIN4 indicating that the RF test panel is under operator control.

4.2.1.4.2 Coupled Input Selection.- The COUPLED INPUT switch on the RF test panel is normally set to REMOTE (center) position which turns over control of coupled input selection via relay K4 to the computer/controller. With the switch in the center position, the DTOUT6 signal from the counter/timer board in the computer/controller is routed through the interface board and control panel to the RF test panel. In the RF test panel, DTOUT6 is routed through closed contacts of the COUPLED INPUT switch and routed to K4 control circuit on the interface board. The computer then controls relay K4 by switching the DTOUT6 signal high or low. Indicator lights on the RF test panel show the K4 position (FORWARD and REFLECTED). Assuming that the PAM UUT is being tested and the computer/controller has selected forward as the coupled input, FWDREF will be high. The K4 control circuit outputs the appropriate MUX1-4 signal to relay K4 on the RF test panel. Relay K4 then selects PAM forward, but the K4 CONTROL circuits already has selected forward, resulting in no change. If the switch is moved to the down direction, a ground is applied to the FWDREF signal applying a low FWDREF signal to the K4 control circuit. The K4 control circuit outputs the appropriate MUX1-4 signal to relay K4 on the RF test panel and the K4 relay, in turn, selects the PAM reflected coupled input, turns off the FORWARD indicator, and turns on the REFLECTED indicator. The other possible selections for the PAM and other UUTs function in a similar manner. Additionally, any time the switch is positioned away from center position, the LOCAL signal is switched high. The high LOCAL signal is routed through the control panel to the interface board in the computer/controller. The interface board routes the high LOCAL signal to the counter/timer board as DTIN4 indicating that the RF test panel is under operator control.

4.2.1.4.3 UUT Power Control.- The UUT POWER switch has three positions: UUT ON, STBY (standby), and OFF. The operator is instructed by the software program to set the switch to the position necessary for the test to be performed. In the STBY (center) position, +28 volts from the +28V power supply is routed through the switch to the amp panel power control circuit and to relays K4 and K5 on the RF test panel. If the test set is set up to test the PAM or lookdown driver (K1CTL active), the AMP PANEL POWER CONTROL circuit applies power to the amplifier panel. When the switch is moved to UUT ON (up) position, the standby circuit path is maintained and the UUT PWR signal is switched low. the interlock logic circuit receives the low UUT PWR signal, enabling the HP power supplies and the power ten power supply which apply power to the UUT. When the switch is moved to OFF (down) position, the standby circuit is disabled removing power from the amplifier panel and relays K4 and K5, and ground is removed from the UUT PWR signal disabling the interlock logic circuit. With the interlock logic circuit disabled, the HP power supplies and the power ten power supply are disabled removing power from the UUT.

4.2.1.4.4 Blower Control.- The BLOWER switch has three positions: ON, LOW POWER, and OFF. In the ON (up) position, ac power is applied to the blowers and the OVERRIDE signal is opened allowing the OVERRIDE signal to seek a high level at the interlock logic circuit. Assuming that all other interlock requirements are met, the interlock logic circuit becomes enabled. In the LOW POWER position, ac power is removed from the blowers and the OVERRIDE signal is grounded. The interlock logic circuit, having received the low OVERRIDE signal, overrides the COOLFLT (blower back pressure sensor) and monitors the IMON (high-current condition in power ten power supply). If IMON goes high, indicating that the UUT is operating in the high-power mode, the interlock logic circuit inhibits power to the UUT. In the OFF (down) position, power is removed from the blowers and the OVERRIDE signal is again opened allowing the OVERRIDE signal to seek a high level at the interlock logic circuit. The interlock logic circuit is again able to monitor the COOLFLT signal, senses the high COOLFLT signal, and inhibits power to the UUT.

4.2.2 Peripheral Interface Panel.- The peripheral interface panel functions as a pass-through interconnecting the external cables between the computer/controller with the internal cables of the PAM test console.

4.2.3 Control Panel.- The control panel provides routing, control, response, and monitor functions in the PAM test console, provides routing to the UUT, and contains a +28V power supply. A functional block diagram of the control panel is shown in figure 4-3. The control panel routes control and response signals between the computer/controller (via peripheral interface panel) and the RF test panel, amplifier panel, and the UUT. Monitor test points are provided for the control and response signals routed to/from the UUT. The control panel routes dc power from the MPS mainframe to the UUT and amplifier panel and provides on/standby/off control of dc power to the amplifier panel. The control panel routes and controls +28V from the +28V power supply to RF test panel. The +28V is also used to operate the on/standby/off control circuitry within the control panel. The control panel also contains test points for the dc voltages.

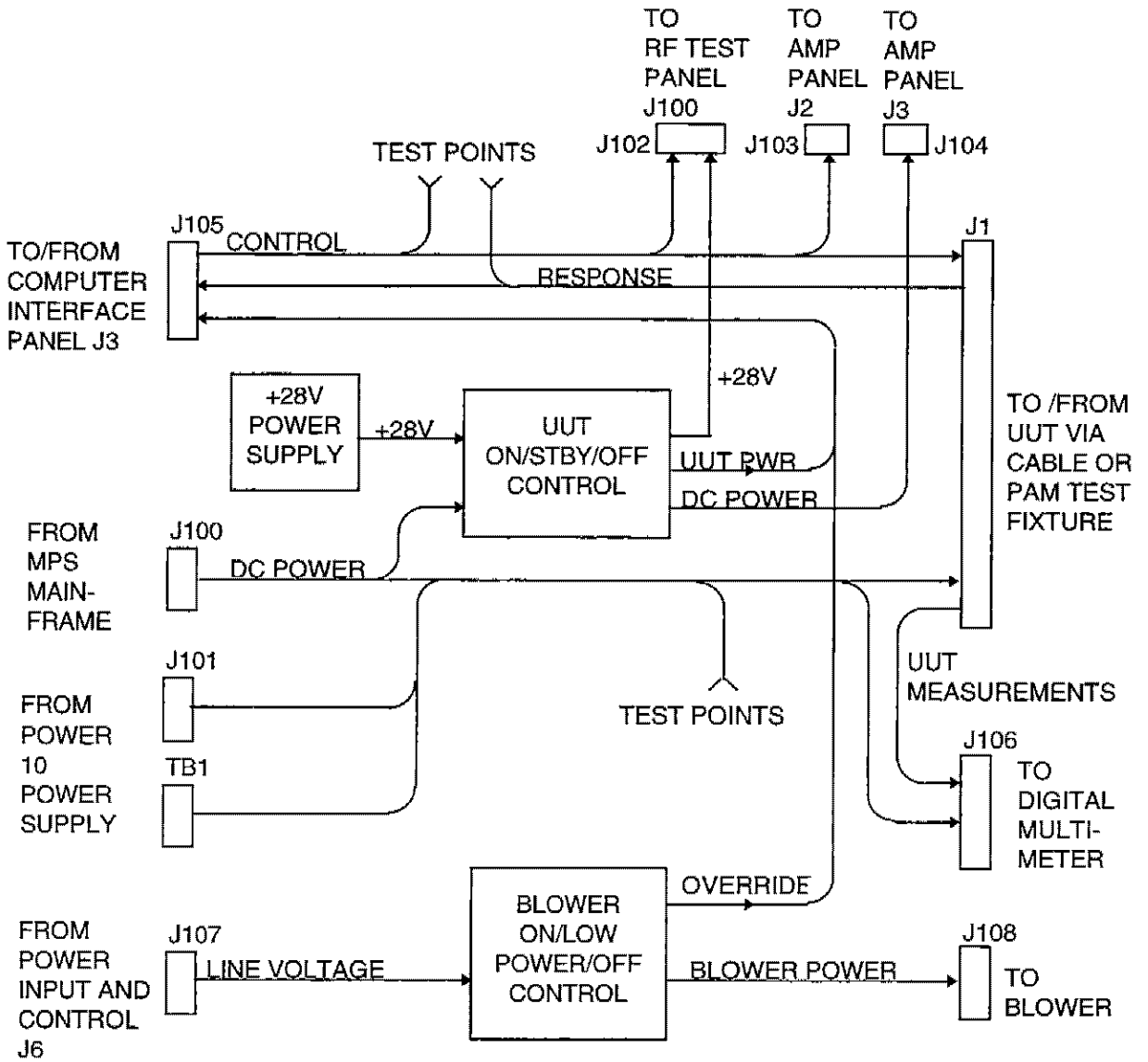

Figure 4-3. Control Panel Functional Block Diagram

4.2.4 RF Test Panel.- The RF test panel, in conjunction with the amplifier panel, provides pulsed RF at power levels of 1.6 dBm, 45 Watts or 180 Watts depending on the UUT being tested, and routes the RF output signal from the UUT to the spectrum analyzer or 6-port reflectometer for analysis. A functional block diagram of the RF test panel is shown in figure 4-4. The RF test panel also provides forward and reflected power measurement of the RF input signal to the UUT and provides the RF reference to the 6-port reflectometer.

4.2.4.1 PAM and Lookdown Driver Testing.- Relays K1 through K3 are controlled by the installation of the UUT test cables. When the RF test panel is used to test the PAM or lookdown driver, relays K1 and K2 are energized. Relay K3 is energized for PAM testing and deenergized for lookdown driver testing. The RF IN signal from the signal generator enters the RF test panel at J101, and is routed to the PIN switch where the signal is pulsed by an RF CONTROL signal from the computer/controller. The pulsed RF IN signal is then routed through energized relay K1 to the amplifier panel. The amplifier panel amplifies the pulsed RF IN signal and routes the signal to relay K3 on the RF test panel. (For PAM testing, relay K3 is energized putting a 6-dB attenuator in the signal path.) From relay K3, the signal is routed through two couplers to connector J3 where it is routed to the input of the UUT as the UUT INPUT signal for amplification. At the first coupler (attenuated by 20 dB) the signal is routed through a -6-dB attenuator and energized relay K2 to the 6-port reflectometer as the RF reference. At the first output of the second coupler, the signal (attenuated by 20 dB) is routed through a -10-dB attenuator to relay K4 for selection by the computer/controller software for forward peak power measurement. The second output of the second coupler provides a means for measuring reflected power from the UUT. The resulting UUT OUTPUT signal from the PAM UUT is routed through RF test panel connector J6 to relay K5. If the software program requires that the signal be analyzed by the spectrum analyzer, relay K5 becomes energized by the computer/controller routing the signal to the spectrum analyzer. If the software program requires that the signal be analyzed by the 6-port reflectometer, relay K5 remains deenergized routing the signal to the 6-port reflectometer. The resulting UUT OUTPUT signal from the lookdown driver UUT is routed through RF test panel connector J5, a coupler, and two attenuators to relay K5. If the software program requires that the signal be analyzed by the spectrum analyzer, relay K5 remains deenergized routing the signal to the spectrum analyzer. If the software program requires that the signal be analyzed by the 6-port reflectometer, relay K5 becomes energized by the computer/controller routing the signal to the 6-port reflectometer.

4.2.4.2 Preamplifier Testing.- Relays K1 through K3 are controlled by the installation of the UUT test cables. When the RF test panel is used to test the preamplifier, relays K1 throughK3 are deenergized. The RF IN signal from the signal generator enters the RF test panel at J101 and is routed to the PIN switch, where the signal is pulsed by an RF CONTROL signal from the computer/controller. The pulsed RF IN signal is then routed through deenergized relay K1 to an amplifier. The amplifier amplifies the pulsed RF IN signal and routes the signal through two couplers to connector J4, where the signal is routed to the input of the UUT as the UUT INPUT signal for amplification. At the first coupler (attenuated by 20 dB), the signal is routed through deenergized relay K2 to the 6-port reflectometer as the RF reference. At the first output of the second coupler, the signal (attenuated by 20 dB) is routed to relay K4 for selection by the computer/controller software for forward peak power measurement. The second output of the second coupler provides a means for measuring reflected power from the UUT. The resulting UUT

OUTPUT signal from the UUT is routed through RF test panel connector J5, a coupler, and two attenuators to relay K5. If the software program requires that the signal be analyzed by the spectrum analyzer, relay K5 remains deenergized routing the signal to the spectrum analyzer. If the software program requires that the signal be analyzed by the 6-port reflectometer, relay K5 becomes energized by the computer/controller routing the signal to the 6-port reflectometer.

4.2.4.3 RF Test Panel Indicators.- Indicators on the RF test panel show the operator how the PAM test set is physically configured via cabling for testing and is software configured via the computer controller. A functional block diagram of the RF test panel indicators is shown in figure 4-5.

4.2.4.3.1 UUT Indicators.- Relays K1 and K3 are energized/deenergized by the cable setup for the UUT to be tested. When the preamplifier UUT is to be tested, relays K1 and K3 are deenergized, resulting in the MODE PREAMP and PREAMP RF SOURCE indicators being lit. When the PAM UUT is to be tested, relays K1 and K3 are energized resulting in the MODE POWER MODULE and HIGH POWER RF SOURCE 45W indicators being lit. When the lookdown driver UUT is to be tested, relay K1 is energized and relay K3 is deenergized resulting in the MODE LOOKDOWN DRIVER and HIGH POWER RF SOURCE 180W indicators being lit.

4.2.4.3.2 Monitor Indicators.- The PAM MONITOR and HIGH POWER MONITOR indicators are controlled by relay K5 which is, in turn, controlled by either the computer/controller or the operator via a switch on the RF test panel. If the computer/controller leaves relay K5 deenergized, both the PAM MONITOR 6 PORT and the HIGH POWER MONITOR SPEC AN indicators will be lit. If the computer/controller energizes relay K5, both the PAM MONITOR SPEC AN and the HIGH POWER MONITOR 6 PORT indicators will be lit.

4.2.4.3.3 Coupled Input Indicators.- The COUPLED INPUT indicators are controlled by relay K4 which is, in turn, controlled by the computer/controller or the COUPLED INPUT selector switch on the RF test panel. If the computer/controller selects forward coupled input, relay K4 energizes the FORWARD indicator. If the computer/controller selects reflected coupled input, relay K4 energizes the FORWARD indicator. The COUPLED INPUT selector switch can be used to override the computer selection.

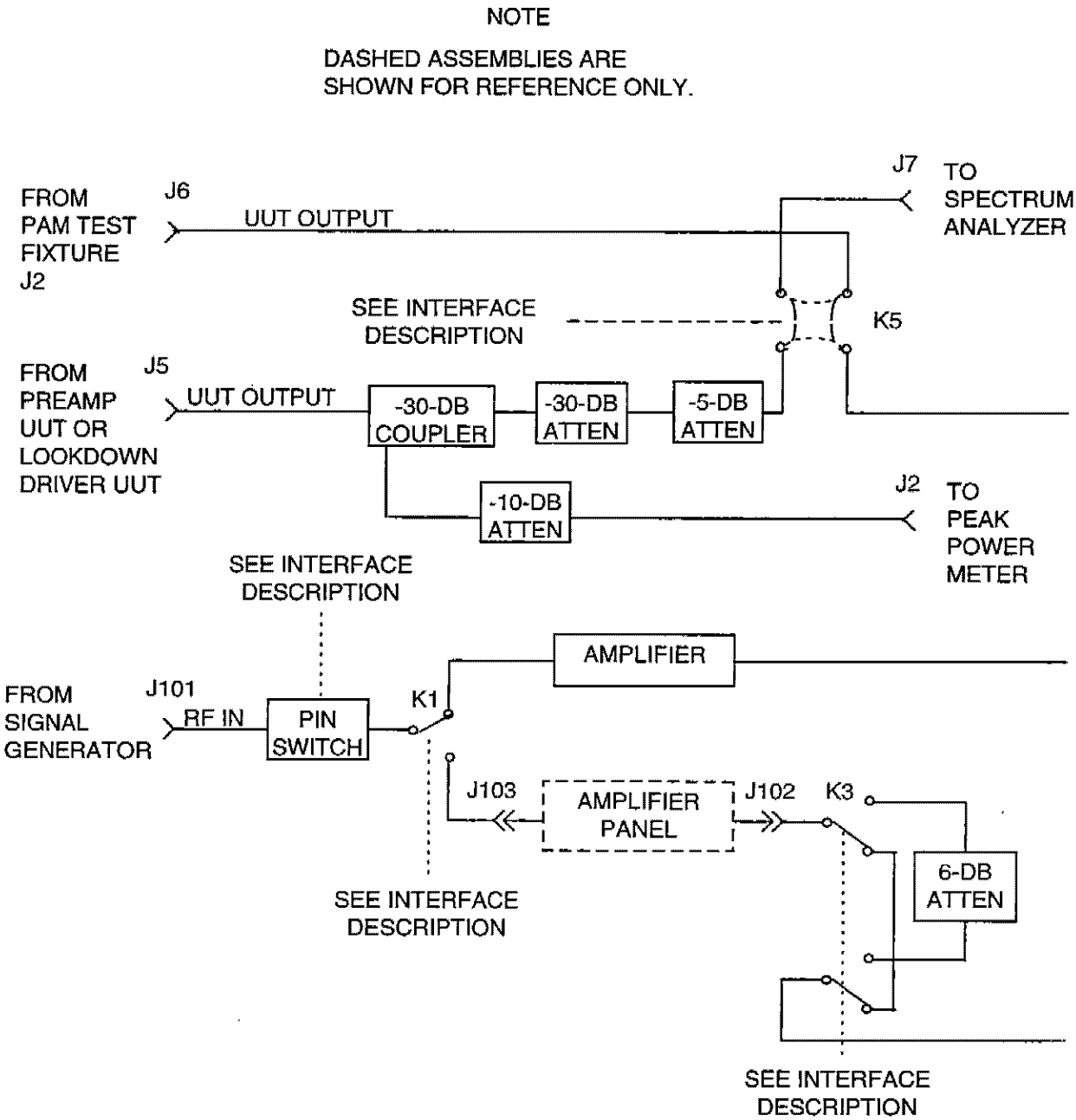

Figure 4-4. RF Test Panel Functional Block Diagram (Sheet 1 of 2)

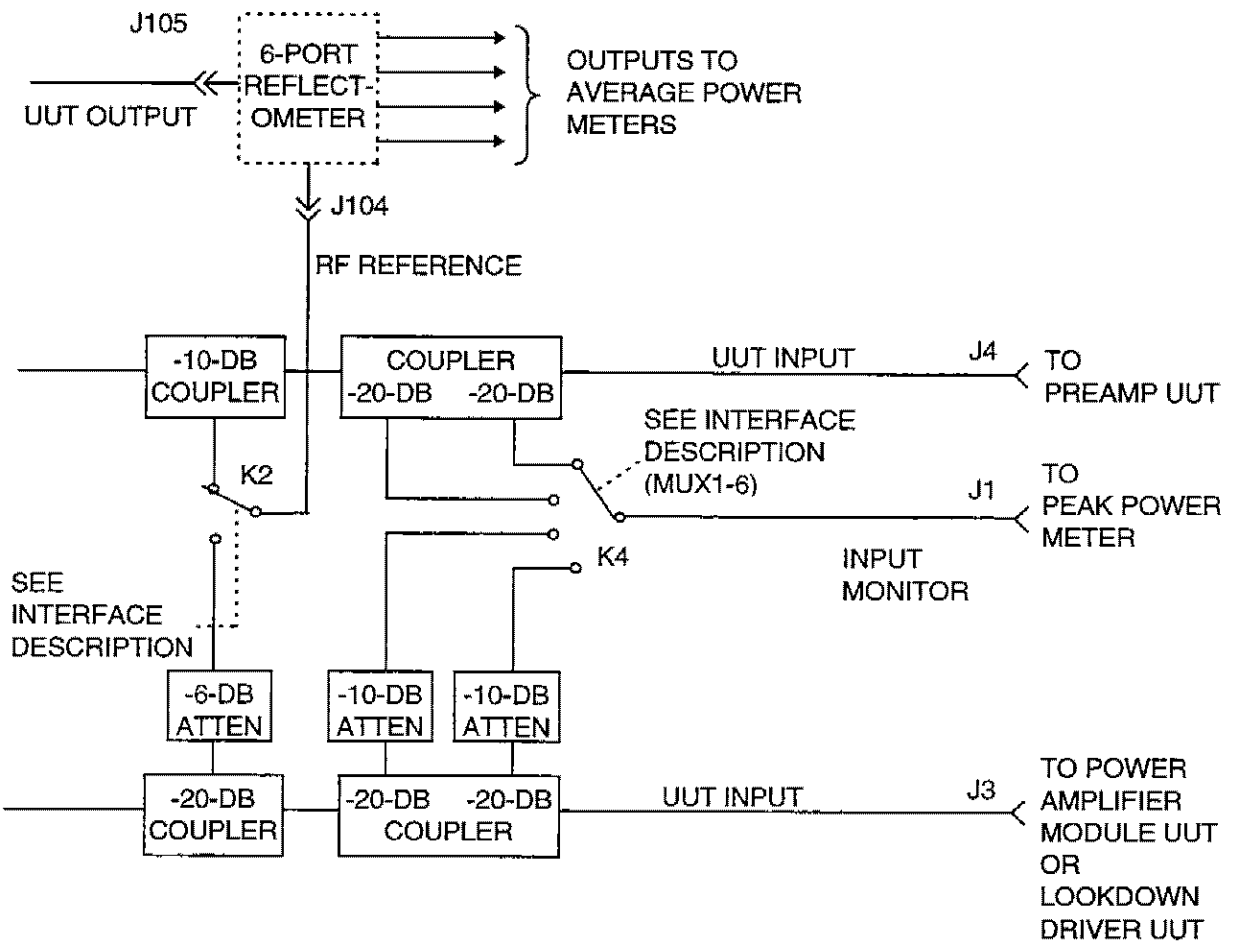

Figure 4-4. RF Test Panel Functional Block Diagram (Sheet 2 of 2)

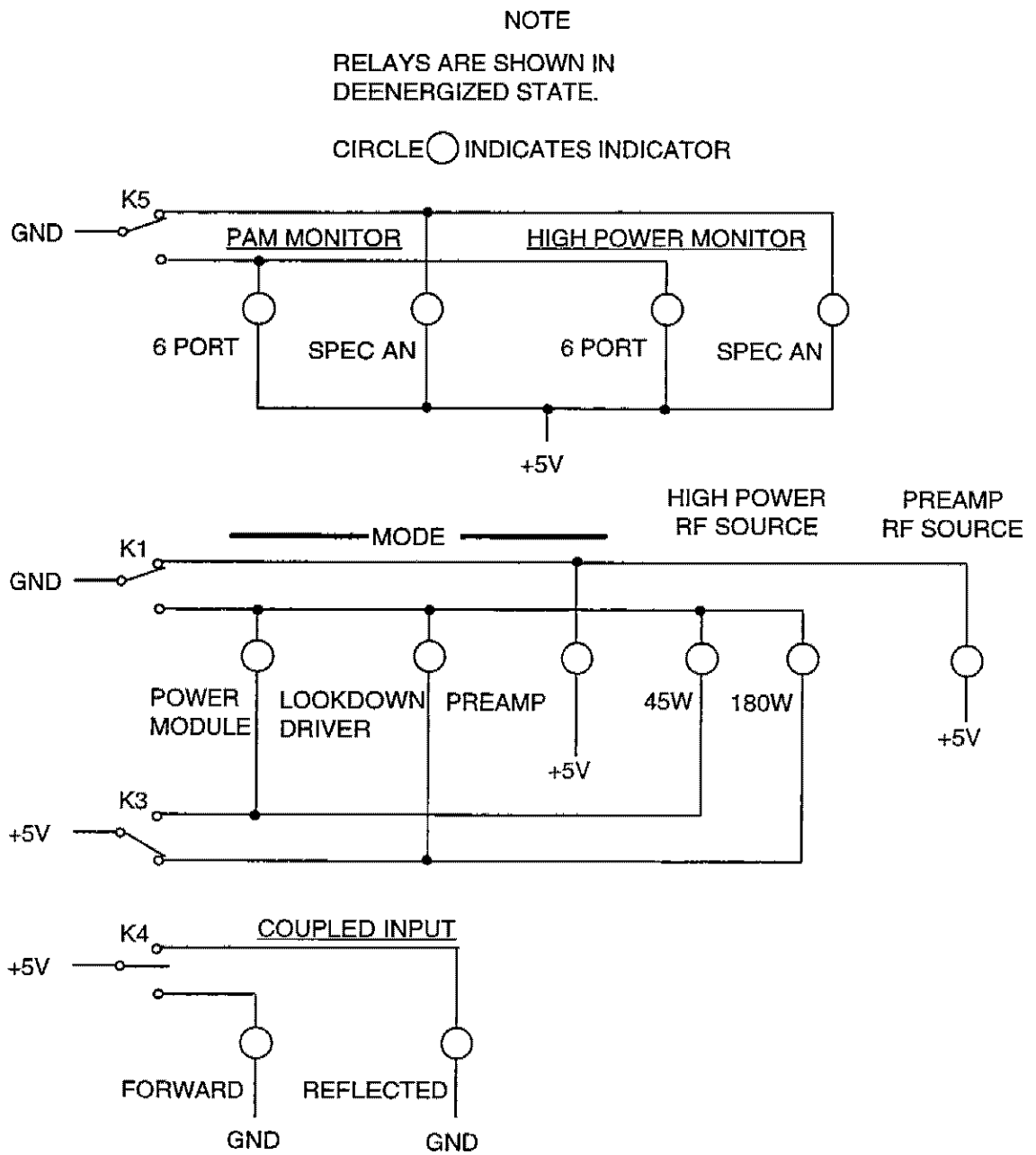

Figure 4-5. RF Test Panel Indicators Functional Block Diagram

4.2.5 Amplifier Panel.- The amplifier panel provides 180 Watts amplification for the RF test panel for testing the PAM UUT or lookdown driver UUT. A functional block diagram of the amplifier panel is shown in figure 4-6. The amplifier panel is made up of the low-power portions of the preamplifier UUT, a PAM UUT, a 4:1 combiner, and a circulator with a high-power termination. The RF IN signal from the RF test panel enters the amplifier panel at J1, is amplified by class A and class C amplifiers and applied to the input of the PAM (P/O amplifier panel). The four outputs from the PAM are combined via the 4:1 combiner and routed through the circulator to the RF test panel via connector J4. Control and power to the amplifier panel are provided through connectors J2 and J3, respectively.

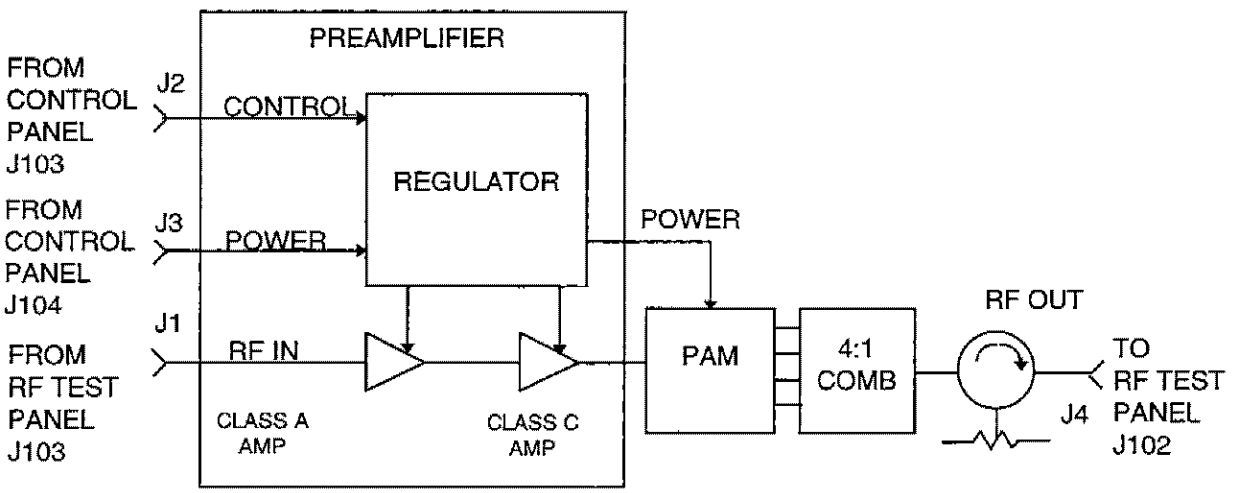

Figure 4-6. Amplifier Panel Functional Block Diagram

4.2.6 6-Port Reflectometer.- The 6-port reflectometer uses the 6-port junction method for measuring phase insertion between the RF reference signal and the UUT signal. A functional block diagram of the 6-port reflectometer is shown in figure 4-7. The RF reference signal and UUT signal are applied to two ports of the 6-port junction. An average power meter input is connected to the remaining four ports of the 6-port junction. By making four magnitude measurements at different phase relationships guaranteed by the 6-port junction hardware, the magnitude and phase relationship of the RF REFERENCE (incident) and UUT OUTPUT (reflected) signals applied to the remaining two ports is calculated by the computer/controller.

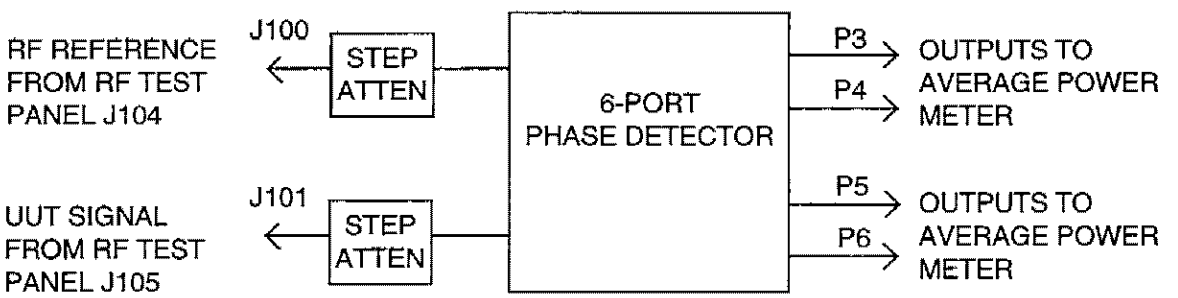

Figure 4-7. 6-Port Reflectometer Functional Block Diagram

4.2.7 PAM Test Fixture.- The PAM test fixture provides a holding fixture and connection point for testing the PAM UUT and provides the required bias capacitors for performing diagnostics on the PAM with the capacitor bank (part of PAM) removed. A functional block diagram of the PAM test fixture is shown in figure 4-8. Power and bite for the PAM test fixture and the PAM enter the PAM test fixture at connector P1. The UUT INPUT signal from the RF test panel enters the PAM test fixture at connector J3 and is routed to the input transition. The input transition (assuming that a UUT is installed in the fixture) applies the power and signal to the PAM UUT. The PAM amplifies the signal and produces four outputs that are combined by a 4:1 combiner. The output of the 4:1 combiner is routed through a -30-dB coupler, a -30 dB attenuator, a -2-dB attenuator and connector J2 to the RF test panel. The portion of the output coupled off by the -30-dB coupler is routed through a -30-dB attenuator and connector J1 as OUTPUT MONITOR signal to the peak power meter. If PAM testing requires that the capacitor bank be removed to access components under the capacitor bank, capacitors C1 through C5 in the test fixture are connected onto the PAM UUT (via wires soldered to PAM and plugged into test points on the fixture) to substitute for the capacitor bank. Current meters M1 through M5 provide diagnostic data for the amplifiers in the PAM associated with capacitors C1 and C5, respectively. A temperature indicator is also provided on the PAM test fixture.

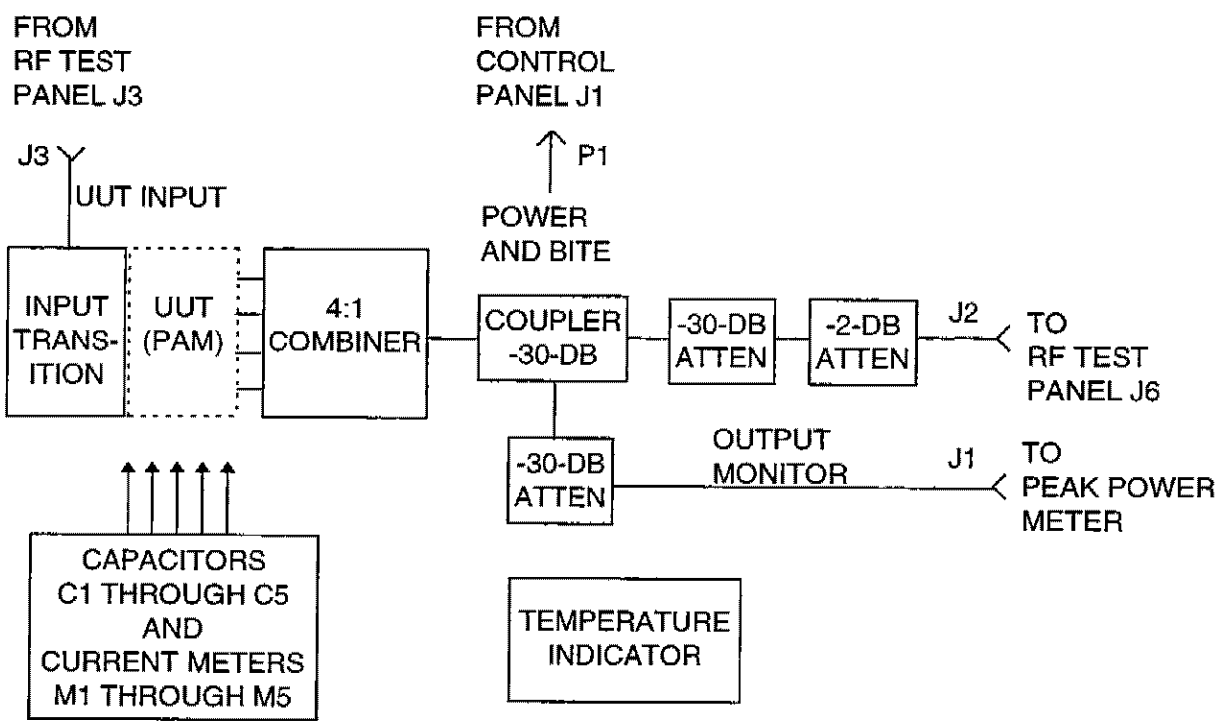

Figure 4-8. PAM Test Fixture Functional Block Diagram

4.3 DIAGNOSTIC SYSTEM THEORY OF OPERATION.- Tests performed on the PAM test set are either performance or diagnostic. Performance tests are those tests necessary for go-path testing of an assembly and are designated as "pass" or "fail." There is no capability for analog or fuzzy values. For example, a reading of 4.9 volts dc for an expected value of 5 volts dc is just as much a failure as a reading of 0.1 volt dc. Since performance tests are pass/fail, it is necessary to create diagnostic tests that determine the difference between an expected value and a measured value, if that difference is important. Diagnostic tests are any tests that are not necessary for go-path testing, but have value for determining the cause of failure. In certain cases tuning procedures are performed as diagnostic tests. All tests have reference designators that consist of a series of numbers delimited by decimal points; for example, test number 4.1.1.2. Performance and diagnostic test results are entered in a database using the reference designator. Test reference designators are important since the information stored in the database is then used by rules, which are human-readable ASCII strings that relate a diagnostic conclusion, to reach conclusions.

4.3.1 Definition of Terms.- Before discussing the artificial intelligence techniques used for fault isolation, some terms must be defined. These terms are:

Rules - Human-readable ASCII strings that relate a conclusion to a given pattern of test passes and failures.

Facts - A pattern of test passes and failures that is presented to the inference engine for evaluation against the rulebase. The facts can be presented to the rulebase even when there are unknown facts (unexpected tests).

Certainty factor - A number from 0 to 100 which describes the relative quality of the conclusion. A vague conclusion like "A1 board bad" would have a low certainty factor, indicating that it would be best to continue troubleshooting before stopping to perform repairs.

Inference engine - Software which evaluates unknown data against an external application-specific knowledge base to create a conclusion. This is in contrast to a different approach of coding, the knowledge and control register (example: IF Test1=F THEN CALL Test2 ELSE CALL Test3). A separate inference engine allows for more complex techniques in evaluating the facts against the knowledge.

Knowledge base - An application-specific collection of rules, neural network coefficients, or other information. A knowledge base is separate from the program that evaluates the data (the inference engine). In the case of this system, the knowledge base is the <uutname>.RUL and .CRL files.

Fault tree diagnostics - A method of diagnostics where an inverted tree flowchart is used. This is equivalent to a large number of nested IF/THEN statements. Tests are executed in the order in which they appear in the tree. There is only one point of entry, and no provision is made for evaluating branches that are closest to completion first.

Firing - A rule is "fired" when the facts presented to the inference engine match all of the tests that make up the rule. There may be additional facts available, but those are ignored. The conclusion is displayed to the operator.

Failing - A rule fails when any one of the facts contradicts a requirement of the rule. A rule is evaluated for failures even if not all of the input facts for the rule are available. By doing this, the inference engine does not bother trying to gather more data to complete the input data for the rule.

Needed fact - The test that would be most useful to run next. This is evaluated by looking at the un-failed, unfired rules with the least number of needed facts and the highest certainty factor.

4.3.2 Rulebase Syntax.- The diagnostic system is created with the following steps:

1. Performance and diagnostic tests are created and assigned reference designators.
2. Rules are created as an ASCII text file (extension .RUL).
3. Conclusions are created using an Microsoft Access database. These conclusions can be edited without affecting the rules that point to them.
4. A rule compiler translates the human-readable rules into a series of integers. This is done off-line from the test executive, when the rule base is created.
5. At runtime, the compiled rulebase (.CRL) file is read by the diagnostic inference engine as data to load internal arrays.
6. When a rule is invoked or "fired," the diagnostic engine looks up the corresponding conclusion in the Microsoft Access database and displays it to the operator.

4.3.2.1 Rulebase Files.- Rulebase files are prepared using a text editor and are intended to be human-readable. They are of the following syntax:

ConclusionName CertaintyFactor = TestName1{P[ass]|F[ail]} {, TestName2{P[ass]|F[ail]}...];

where,

ConclusionName is the single-word reference to a conclusion in the database. The reference is case insensitive, but may not contain any spaces. Examples of conclusion names are "U32_Fail" and "Input_Filter."

Certainty Factor is a number from 0 to 100 that describes the level of certainty in the conclusion. The most certain is 100. The diagnostic system includes rules for broad functional areas with low certainty, and narrow defined areas with high certainty. The certainty factor is used to determine whether more tests are needed.

TestName1,2 are the reference designators of performance or diagnostic tests.

Any number of tests may be strung together joined by AND keywords.

4.3.2.1.1 Logical ORing.- Referring to a reference designator that is not the lowest level has the effect of a logical OR of the tests below it. An example of this is as follows:

Assume the following test results:

4.1.1 Passes	(1200-MHz power)
4.1.2 Fails	(1300-MHz power)
4.1.3 Passes	(1350-MHz power)

A test name referring to 4.1 would be listed as a failure.

Note that this is the only way to OR tests together. An alternate method would be to create a rule for each condition. The following sets of rules are equivalent:

Q1_fail 90+4.1F, 4.3P:	Q1_fail 90=4.1.1F, 4.3P; Q1_fail 90=4.1.2F, 4.3P; Q1_fail 90=4.1.3F, 4.3P;

4.3.2.1.2 Line Continuation.- The lines that rules are on get very long if there are long strings of conditions. Long lines may be broken into separate lines with carriage returns. A tab character may be used to move them out of the first few columns of the line to improve readability. A line must not be broken in the middle of the keyword or test name.

4.3.2.1.3 Delimiters.- Spaces, tabs, and carriage returns are used to delimit between items on each line. Multiple delimiters are ignored. To allow the rulebase to be imported into Excel, tabs are used as delimiters.

4.3.2.1.4 Test Order in Rulebase.- When the rulebase is compiled, a list is created showing all of the test numbers in the order in which they appear. Given the choice between two tests with equal likelihood of providing a useful result, the inference engine calls for the test that appears first on its list. Therefore, tests that are time consuming to perform are placed at the end of the line, later in the rulebase. Tests that are to be performed only as a last resort may be duplicated by other methods in the same rule to push down their priority.

4.3.2.1.5 Comments.- A C++ style "//" may be used to designate a comment to the end of the line. The following are examples of a rulebase complete with comments:

```
//Input Stage Troubleshooting
InputStage      @ 50  when 4.1.1 fails
J1_Open         @ 90  when 4.1.1 fails and 4.4.3 fails
U2              @ 90  when 4.1.1F and 4.4.2F
//Output Stage Troubleshooting
```

OutputStage	@ 50	when 4.2F and 4.1.1P
OutpuStageU1	@ 75	when 4.2F and 4.1.1P and 4.4.3F and 4.4.5F and 4.3.2F

4.3.2.2 Conclusion Database.- The conclusion database is a table in Microsoft Access that is stored in the same .MDB and .LDB file as the UUT data sheet. It consists of the following fields:

Field Name	Type	Description	Example
Conc_ID	Text	Short unique conclusion identifier to be used as a key to relate a rulebase line to a record in the conclusion table. Must not contain any spaces or tab characters.	"Output_Bad"
Primary_Concl	Text	Long version of conclusion, generated and updated by Engineering. The user does not have write access to this.	"Check output stage consisting of U34, R23, and R28. Verify power supply voltages on U1 pins per UUT schematic."
User_Concl	Text	Additional conclusions, generated and updated by the user to augment the primary conclusion	"Check for lifted ribbon jumper between U1 and J3."

The primary conclusions are written on the assumption that the operator is an experienced technician with basic electronic knowledge. It is also assumed that schematic diagrams and assembly drawings are available, along with data sheets of the various integrated circuits used on the UUTs. The purpose of the conclusion is to point the operator to a specific area of the UUT.

4.3.3 Rulebase Compiler.- The rulebase compiler takes the human-readable <uutname>.RUL file and translates it into a numeric version that can be quickly loaded into the inference engine as a <uutname>.CRL file. It is executed at rulebase design time only, so there are no concerns with interfaces to VEE or C++ programming languages. The only I/O of the rulebase compiler is via the input and output files. The following functions are performed:

1. Select and open the appropriate <uutname>.RUL file for input and <uutname>.CRL file for output.
2. Make one pass through the data to build an array of conclusion identifications (IDs) and an array of reference paragraphs (also called test IDs) in memory. Read and maintain test IDs in the order in which they appear in each rule, from top to bottom.
3. Divide the total number of tests by 16 to get the total number of 16-bit integers per rule.
4. Write the header lines and totals for integers, rules, and test IDs) per the compiled rulebase example below. If format changes are made, the version number may be rolled so that legacy software can be maintained.
5. Make a second pass through the .RUL file to convert the rules to integers. Write the conclusion and confidence factor, followed by a carriage return. Create the rules and rule

mask integers by setting the bit in the integers corresponding to the position of the applicable test in the array of test IDs. The first test is at the least significant bit (LSB) of the leftmost digit. It may be necessary to use unsigned integers to allow the logical operations of the inference engine to work.

4.3.3.1 Compiled Rulebase Example.- The following is an example of a compiled rulebase:

Compiled Rulebase Line	Function of Line
SUREfix compiled rulebase version	Version number to verify against
1.00	
2	Total integers per rule
3	Total number of rules
17	Total number of test Ids
"Conclusion_@a", 80	First of three rules: ConclusionName and ConfidenceFactor. Note: The quotes might not be necessary.
3,0	Rule: 0=false or failed 1=true or passed
3,0	Rule Mask: 0=don't care 1=associated rule bit applies
"Conclusion_b", 30	Second of three rules
3,1	
3,1	
"Conclusion_c", 99	Third of three rules
5,0	
7,0	
4.1,4.11,4.2,4.3,4.16,4.17,4.6,4.8,4.9, 4.10, 4.5, 4.12, 4.13,4.7, 4.14, 4.15	Test IDs (reference designators) associated with each bit in rules.

4.3.3.2 Sample Code to Read the Compiled Rulebase.- The following Visual Basic code fragment is used to read the compiled rulebase before each test session. It is provided as a reference to understand the format of the compiled rulebase, rather than to develop a syntax definition. This code will be translated to C++ for the inference engine DLL.

```
Dim i As Integer                    'generic counter
Dim r As Integer                    'rule number being evaluated
Dim w As Integer                    'word number of rule or fact
. . .
Input #1, version        'verify version of rulebase
   If version<> "SUREfix compiled rulebase version 1.00" Then <handle error>
. . .
   Input #1, twords        'total integers per rule
   Input #1, trules        'total number of rules
   Input #1, TTestIDs      'total number of test IDs
```

```
    ReDim rule(twords, trules) As Integer        '(w,r) indicates rule for knowledge
                                                 'base for each bit in rule or fact
                                                 'word:"
                                                 '     0=false or failed
                                                 '     1=true or passed
    ReDim rule(twords, trules) As Integer        '(w,r) indicates rule mask
                                                 'for each bit in rule mask or fact mask
                                                 'word:"
                                                 '     0=don't care
                                                 '     1=associated rule bit applies
    ReDim testID(TTestID) As String              '(I) Test Name associated with each bit
. . .
    'read compiled rules
    For r = 0 To trules - 1
       Input #1, conclusion(r), CF(r)
       For w = 0 To twords - 1
           Input #1, rule(w,r)
       Next w
       For w = 0 To twords - 1
           Input #1, rmask(w,r)
       Next w
    Next r
    'read TestIDs (associated w/ each bit in rules)
    For I = 0 To TTestID - 1
       Input #1, testID(i)
    Next I
```

4.3.4 Inference Engine Algorithm.- The inference engine uses the rules to reach conclusions for fault isolation. In ASCII format, rules appear as follows:

1. IF A AND B THEN X
2. IF C AND D THEN Y

where A - D are expressions such as Test =Pass or Test3=Fail, and X-Y are conclusion identifiers such as Concl1. Expressions may have one of three values:

Pass or True
Fail or False
Don't Care (expression not present in rule) or unknown

The rules are limited to expressions joined by the AND keyword. ORs may be simulated by the "brute force" method of creating a new rule for each OR option. For example, the rule

IF (A OR B) AND C THEN X

may be created by two rules:

1. IF A AND C THEN X
2. IF B AND C THEN X

ORs may also be simulated by referencing an upper-level reference paragraph number for each test, which evaluates to:

1. Pass if all tests under that paragraph pass
2. Fail if any test under that paragraph fails
3. Unknown if any tests under that paragraph were not executed and there have been no failures.

Rules are mapped into bit locations on pairs of integer arrays. One variable is Rule() and the other is RMask(). Assuming an 8-bit integer for each element, each element pair holds eight rules. In practice, the longest integer available in the language is the most efficient and subarrays of these stretch the number of allowable expressions. Given the two rules in the first example, ABCD map to the LSB, 2nd LSB, etc.

IF Test1=Pass AND Test2=Pass THEN X, maps as Rule=00000011 and Rmask=00000011
IF Test3=Pass AND Test4=Fail THEN Y, maps as Rule=00001000 and Rmask=00001100

To execute the rule base, a pattern of expression is given that has a known value. The pattern is mapped into bits of variables Fact and Fmask in much the same way that the rules are. The Boolean equations below have arguments of "r" for the rule number and "w" for the element within each rule. This allows very large input data sets.

The rule base is examined for failed rules:

rulefail(w,r)=Not((rule(w,r)Eqv fact(w)) OR (NOT (rmask(w,r) And fmask(w)))

failed(r)=failed(r) OR ((rulefail(w,r))<>0)

The rule base is examined for any rules that have all the data present to evaluate the rule:

needfact(w,r)=rmask(w,r) AND (rmask(w,r) Xor fmask(w))

The rule base is examined for any rules that are satisfied (fired):

fire(r)=Not (failed(r)) AND (needfact(w,r)=0) And fire(r)

Rules with the minimum number of test results needs and the maximum certainty factor are determined. These are the next prospective rules to try to satisfy. The inference engine selects the first fact needed for the desired rule and communicates it to the operator or Test Executive. This prioritizes tests by the order in which they appear in the array of tests, allowing tests that require a large amount of time to run to be done only as a last resort.

4.3.5 Order of Needed Fact Selection.- The order in which the inference engine selects tests for execution is determined as follows:

1. All rules which have been fired, or that have any failed elements are ignored.
2. The number of unknown facts for each remaining rule are totaled, and the rules are sorted by that count. All rules with more than the minimum number of needed facts are ignored; however, they may be evaluated later.
3. The rule with the highest certainty factor is selected for evaluation.
4. The first needed fact in order of appearance in that rule is selected. This fact is cross-referenced to the table of reference paragraphs, and the reference paragraph is sent to the Test Executive for execution.

Some methods affecting the order of execution when writing rules:

1. The most "expensive" test (i.e., the test that requires the most time to perform) is placed at the end of the rule.
2. To delay running a low number of expensive tests for a rule until other methods have been tried, duplicate the test several times in the rule (example: Output_Bad = 4.2.3F AND 4.2.3F...).
3. The certainty factor of rules containing expensive tests is decreased slightly.

4.3.6 Example of Execution.- An example of fault isolation execution is provided in figure 4-9. In this figure the knowledge base of rules is presented as flowcharts. These flowcharts show that the tests are not performed in a fixed sequence, but are performed to satisfy the requirements of the knowledge base rules. To begin the example, assume that Test5 passes. Fault isolation testing then uses the methods outlined in the following steps:

1. Test1 is selected first because it is the shortest path to reach a conclusion.
2. Assuming Test1 fails, conclusion1 with a 30-percent certainty factor is displayed to the operator. Because the certainty factor is low, the operator chooses to continues troubleshooting. Because Test1 did not pass, conclusion3 is a failed rule, and no attempt will be made to complete its inputs unless they are needed elsewhere.
3. There are now two rules with equal numbers of needed facts: Conclusion4 at an 80-percent certainty factor needs Test3 and conclusion1 at a 90-percent certainty factor needs Test4. Test4 is selected. If it passes, then conclusion1 is displayed at a 90-percent factor. If it does not pass, then testing continues with Test3.

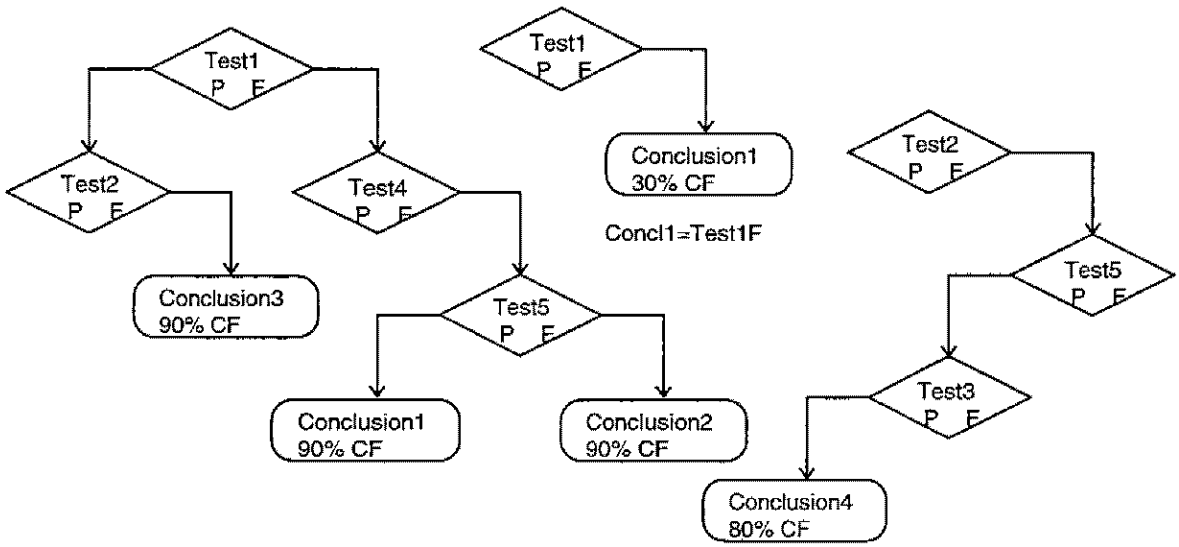

Figure 4-9. Fault Isolation Test Example

4. Assuming that Test4 passed and Test3 failed, that leaves testing at a dead end. At this point, the operator reverts back to the low certainty factor conclusion1 at a 30-percent certainty factor and troubleshoots from there.

4.3.7 Diagnostic/Fault Isolation Summary.- The previous paragraphs provide a description of how the diagnostic software works. A description of the diagnostic system from the PAM test set operator's point of view is provided in the following paragraphs.

4.3.7.1 General Overview.- When a failure occurs during a performance test during the "Pause on Fail" test mode, a test failure window appears. One of the buttons in the test failure window is labeled "RUN Diagnostics." Activating this button loads the diagnostic test library for the UUT and a diagnostic selection menu replaces the normal test selection menu. In addition, a diagnostic conclusions window appears in the lower right-hand portion of the screen. Information concerning the fault isolation progress may be displayed in this window. Below the diagnostic selection menu is a box which displays the next diagnostic test to be performed. In general, most diagnostic tests measure signal characteristics at a point internal to the UUT and fault isolation requires that several diagnostic tests be performed prior to identifying the fault ambiguity group information. Clicking on the "RUN Diagnostics" button causes the indicated diagnostic test to be performed. Once the diagnostic test has been completed, the test results are evaluated by the diagnostic inference engine. Another diagnostic test may be selected by the inference engine or it may display a diagnostic conclusion in the diagnostic conclusion window. The box below the diagnostic selection menu is updated to indicate what action is to be taken by the operator. If another diagnostic is to be performed, the operator must click on the "RUN Diagnostics" button again to initiate the test. If the inference engine has isolated the fault, the box below the diagnostic selection menu displays "No

more rules: EXIT, REPAIR, & RETEST." When this message is displayed, the operator must note the diagnostic conclusion information. The diagnostic conclusions provide the operator with information indicating the general area in which the fault exists. The operator must determine which component(s) are to be replaced. At this point, power is still applied to the UUT and the operator can perform any manual troubleshooting deemed necessary to isolate to the faulty component(s). Upon completion of the fault isolation testing, the operator must click on the "EXIT Diagnostics" button. This action returns the operator to the normal test selection menu. At this time, power is removed from the UUT. The operator then has the option of either clicking on the "EXIT UUT" button to return to the SELECT TEST MENU or repairing the UUT. A hard copy of all testing activities may be obtained by clicking on the "Print Session Log" button located in the data control window.

4.3.7.2 UUT Specific Diagnostics.- The fault isolation software helps the operator locate the faulty component(s) whenever a UUT performance test fails. When a failure is detected, the operator initiates diagnostics and all of the available test data is analyzed by the inference engine to determine the next test to be performed to gain additional data necessary to isolate to a fault ambiguity group. The selected test may be either a diagnostic test or another one of the performance tests. Following each test, the inference engine again analyzes the test results to determine whether the fault has been isolated. If not, the inference engine selects the next test to be performed. When the fault has been isolated, a diagnostic message is displayed. Normally, the diagnostic message identifies the fault ambiguity group, which is a list of components indicating the general location of the failed component(s) in the UUT. At other times, the diagnostic message suggests a tuning test, where applicable, or another test to be performed. Sometimes the diagnostic message displayed informs the operator of preliminary conclusions indicating the general area in which the failure exists. The operator is then instructed to continue manual diagnostic testing in that area to further isolate the failure. Manual RF probing is employed for fault isolation in some UUTs. Once the diagnostic message displays the fault ambiguity group information, the operator must manually determine which component(s) caused the failure.

CHAPTER 5

MAINTENANCE INSTRUCTIONS

5.1 SCOPE.- This chapter provides test procedures and maintenance instructions for the maintenance, calibration, and troubleshooting of the PAM test set. Many of these test procedures utilize the commercial off-the-shelf (COTS) equipment in the PAM test set for either signal generation or measurement. It is assumed that all COTS equipment used to perform the self-test procedure for the PAM test set is fully operational. Test procedures and troubleshooting data for the COTS equipment are not included in this chapter; refer to the commercial manuals for COTS equipment data.

5.2 STANDARD SHOP PRACTICES.- The test procedures in this chapter are for the maintenance and troubleshooting of the PAM test set. When repair of custom hardware is required, instructions for unique repair are given in the paragraph in which the faulty component is listed. Refer to T.O. 00-25-234, General Shop Practice Requirements for the Repair, Maintenance, and Test of Electrical Equipment, for detailed information and instructions for printed circuit board repair.

5.3 PAM TEST SET TEST AND MAINTENANCE PROCEDURES.- The following paragraphs outline the test and maintenance procedures for the PAM test set. If a custom hardware test fails, perform the accompanying troubleshooting procedure.

5.3.1 Manual Test Procedures.- Manual tests of the PAM test set consist of a blowers and interlocks test and a voltage verification test. These test procedures are given in the following paragraphs.

5.3.1.1 Blowers and Interlocks Test.- To test the blowers and interlocks perform the following procedure:

1. Verify that all rear doors are closed.

2. Place the MAIN switch on the Pulizzi PC 846 power input panel to the ON position.

3. Place the CONSOLE circuit breaker on the Pulizzi PC 846 power input panel to the ON position.

4. Verify that the PAM test console blowers at the front of each bay are on and blowing air into the console.

5. Open the rear doors of the PAM test console one at a time. Verify that the blowers stop when each door is opened and that they resume blowing air into the console when each door is closed.

6. Push the EMERGENCY OFF mushroom switch on the control panel in and verify that power is removed from all equipment. Pull the EMERGENCY OFF mushroom switch out and verify that power is reapplied to the equipment.

5.3.1.2 Voltage Verification Test.- To perform the voltage verification test perform the following procedure:

1. Verify that all commercial equipment is turned on and operating.

2. Using the Keithley 2001 digital multimeter (DMM), measure the ac voltage between the following test points, located below the CONSOLE circuit breaker on the Pulizzi PC 846 power input panel, for a value of 103 to 128 Vrms:

   a. 60 HZ PHA and NEUT

   b. 60 HZ PHB and NEUT

   c. 60 HZ PHC and NEUT.

   If any voltage measurement is incorrect, replace the Pulizzi PC 846 power input panel.

5.3.2 Automatic Test Procedures.- Automatic tests for the PAM test set are computer controlled. Specific instructions for running the tests are given on the computer monitor. A test executive program provides the operating environment and the data logging functions of the tests. It is assumed that the operator is familiar with the basic operation of Microsoft Windows and network log-in procedures. Initiate automatic testing as follows:

1. Verify that PAM test set power is on and that all equipment in the console and computer/controller work station is operating.

2. Log into the user account on the network, if required, and run Microsoft Windows.

3. Using the mouse, double-click on the **PAM TEST SET** icon to initiate HP VEE.

NOTE

Wait until loading is completed before attempting step 4.

4. Using the mouse, click on the **START TEST EXEC** button.

NOTE

Unless otherwise indicated, all actions on the computer are performed using the mouse.

5. Select **SELF-TEST** on the menu.

6. Click on the **RUN** button at the base of the screen.

NOTE

If the **RUN** button is not visible, ensure that the HP VEE window is maximized. If necessary, simultaneously press the <CTRL>, <SHIFT, <ALT>, and <F4> keys to place the monitor in 1280 x 1024 resolution mode.

7. Verify that the **TEST SELECTION MENU**, the **SELF-TEST LOG DISPLAY** and other test status items are displayed.

8. To initiate testing over the entire range of tests, click on the **RUN** button.

9. Follow the instructions on the screen to perform the following tests.

5.3.2.1 IEEE-488 Communications Test (Test 0).- The IEEE-488 communications test verifies that the IEEE-488 bus is operating properly. Verify that the instruments on the IEEE-488 bus respond within the nominal timeout period at the addresses listed in table 5-1. If the instrument does not respond within the nominal timeout period, troubleshoot the instrument. If all parts of the test fail, troubleshoot the GPIB board in the computer/controller. Refer to the applicable vendor publications to troubleshoot the COTS equipment.

5.3.2.2 Power Supply Tests (Tests 1 through 6).- Each of the modular power supplies and the Power Ten power supply are automatically measured on the DMM via the DMM relay multiplexer. In addition, the self-test cable assembly PN AD421785G01 wraps each power supply signal at the interface panel through the analog monitor signals of the relay multiplexer to the DMM. This tests the analog monitor paths through the DMM relay multiplexer. All power supply tests are performed with self test cable assembly PN AD421785G01 connected to J1 on the control panel. The expected results of the power supply tests are summarized in table 5-2. Refer to the applicable vendor publications to troubleshoot the COTS equipment.

Table 5-1. IEEE-488 Communications (GPIB) Test Expected Results and Corrective Action

Test No.	Test Name	Address	Expected Result	Corrective Action
0A	Oscilloscope	1401	Pass	Troubleshoot oscilloscope
0B	Signal Generator	1403	Pass	Troubleshoot signal generator
0C	PS1	140500	Pass	Troubleshoot PS1
0D	PS2	140501	Pass	Troubleshoot PS2
0E	PS3	140502	Pass	Troubleshoot PS3
0F	PS4	140503	Pass	Troubleshoot PS4
0G	PS5	1406	Pass	Troubleshoot PS5
0H	PS6	140504	Pass	Troubleshoot PS6
0I	Power Meter 1	1413	Pass	Troubleshoot Power Meter 1
0J	Power Meter 2	1414	Pass	Troubleshoot Power Meter 2
0K	Power Meter 3	1415	Pass	Troubleshoot Power Meter 3
0L	Spec. Analyzer	1418	Pass	Troubleshoot Spectrum Analyzer
0L	Dig. Multimeter	1422	Pass	Replace DMM

Table 5-2. Power Supply Tests Expected Results and Corrective Action

Test No.	Test Name	Command	Expected Result	Corrective Action
2A	Ch 8 (PS2 monitor)	+15V	+15 (±0.05) V	Troubleshoot PS2. If power supply is OK, troubleshoot DMM.
2B	Ch 2 (PAM Q2 current monitor)	+15V	+15 (±0.05) V	Troubleshoot PS2. If power supply is OK, troubleshoot DMM.
3A	Ch 9 (PS3 monitor)	+33V	+33 (±0.05) V	Troubleshoot PS3. If power supply is OK, troubleshoot DMM.
3B	Ch 3 (PAM Q3 current monitor)	+33V	+33 (±0.05) V	Troubleshoot PS3. If power supply is OK, troubleshoot DMM.
4	Ch 4 (PAM Q4 current monitor)	+5V	+5 (±0.05) V	Troubleshoot PS4. If power supply is OK, troubleshoot DMM.
5	Ch 10 (PS5 monitor)	+40V	+40 (±0.05V	Troubleshoot PS5. If power supply is OK, troubleshoot DMM.
6	Ch 10 (PS6 monitor)	+33V	+33 (±0.05) V	Troubleshoot PS6. If power supply is OK, troubleshoot DMM.

5.3.2.3 Interface Board Tests (Tests 7 through 18).- Each signal path to/from the interface board is automatically tested by wraping signals back to the interface board or to the DMM via self-test cable assembly PN AD421785G01. All interface board tests are performed with self-test cable assembly PN AD421785G01 connected to J1 on the control panel. The program instructs the operator to set the switch on the self-test cable assembly to applicable positions. The expected results of the interface board tests are summarized in table 5-3.

Table 5-3. Interface Board Tests Expected Results and Corrective Action

Test No.	Test Name	Command / Level	Expected Results / Level	Corrective Action
7	Initial conditions	DO0 / zero	DI0 / zero	Troubleshoot failed signal path on interface board and control panel.
		DO1 / zero	DI1 / zero	
		DO2 / zero	DI2 / zero	
		DO3 / zero	DI3 / zero	
		DO4 / zero	DMM5 / <-2.5Vdc	
		DO5 / zero	DMM6 / <-2.5Vdc	
8	Digital data bit 0 wrap test	DO0 / high	DI0 / high	If DI0 is not high, troubleshoot DO0/DI0 signal path on interface board and control panel.
9	Digital data bit 1 wrap test	DO1 / high	DI1 / high	If DI1 is not high, troubleshoot DO1/DI1 signal path on interface board and control panel.
10	Digital data bit 2 wrap test	DO2 / high	DI2 / high	If DI2 is not high, troubleshoot DO2/DI2 signal path on interface board and control panel.
11	Counter 3 to data in bit 3 wrap test	DTCNT3 DO3 / high	DI3 / high	If DI3 is not high, troubleshoot DO3/DI3 signal path on interface board and control panel.
12	Counter 4 out to DMM channel 5 test	DTCNT4 DO4 / high	DMM5 / >+2.5Vdc	If DMM5 is not >+2.5Vdc, troubleshoot DO4/DMM5 signal path on interface board and control panel.

Table 5-3. Interface Board Tests Expected Results and Corrective Action--Continued

Test No.	Test Name	Command / Level	Expected Results / Level	Corrective Action
13	Counter 5 out to DMM channel 6 test	DTCNT5 DO5 / high	DMM6 / >+2.5Vdc	If DMM6 is not >+2.5Vdc, troubleshoot DO5/DMM6 signal path on interface board and control panel.
14	PRE cable ID test	Self-test switch to PRE	DTIN5 / low DTIN6 / high DTIN7 / high	If DTIN5, DTIN6 and DTIN7 are not as indicated, troubleshoot signal paths on interface board and control panel.
15	PAM cable ID test	Self-test switch to PAM	DTIN5 / high DTIN6 / high DTIN7 / low	If DTIN5, DTIN6 and DTIN7 are not as indicated, troubleshoot signal paths on interface board and control panel.
16	LDD cable ID test	Self-test switch to LDD	DTIN5 / high DTIN6 / low DTIN7 / high	If DTIN5, DTIN6 and DTIN7 are not as indicated, troubleshoot signal paths on interface board and control panel.
17	Serial data out disabled test	DTCNT3 DO3 / high; self-test switch to PRE, data on COM1R	DTIN5 / low DTIN6 / high DTIN7 / high DO3 / no data	If serial data is present, troubleshoot DTCNT3, DO3, COM1R, LDCBL and DTIN6 signal paths on interface board and control panel.
18	Serial data out enabled test	DTCNT3 DO3 / high; self-test switch to LDD, data on COM1R	DTIN5 / high DTIN6 / low DTIN7 / high DO3 / data	If serial data is not present, troubleshoot DTCNT3, DO3, COM1R, LDCBL, and DTIN6 signal paths on interface board and control panel.

5.3.2.4 Timing Tests (Test 19).- The counter/timer board is programmed to produce the pulses shown in figure 5-1. The operator is prompted throughout the procedure to connect the oscilloscope channel 1 and channel 2 probes for each waveform measurement and to check the waveform displayed on the oscilloscope. Troubleshoot hardware for applicable waveforms as follows:

No waveforms present	Troubleshoot counter/timer board, interface board and computer/controller
DO3 not correct or present	Troubleshoot counter/timer board, interface board, and control panel
DO4 not correct or present	Troubleshoot counter/timer board, interface board, and control panel
DO5 not correct or present	Troubleshoot counter/timer board, interface board, and control panel
RFCTL not correct or present	Troubleshoot counter/timer board, interface board, control panel, RF test panel, and interlock circuit.

Refer to the applicable vendor publications to troubleshoot the COTS equipment.

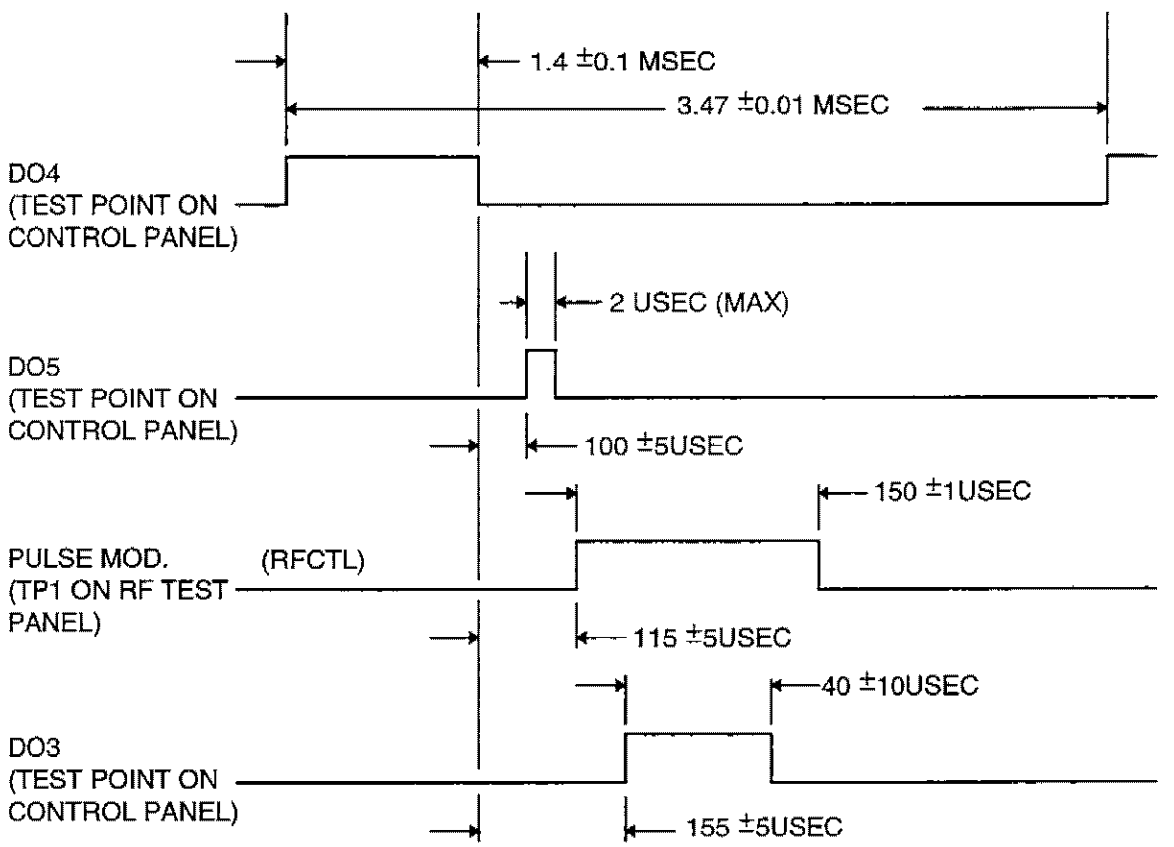

Figure 5-1. Timing Tests Waveforms

5.3.2.5 UUT Interlock Tests (Test 20).- The UUT interlock tests verify that the power supplies are inhibited and RF signal is inhibited when any of the interlock signals are enabled. The interlock signals consist of DI3 (UUT overtemperature fault), IMON (40V current interlock monitor), UUTPWR (UUT power), and OVERRIDE. The IMON signal is verified and adjusted as part of the maintenance and calibration procedure which must be performed before this test is performed. The UUT POWER switch and the BLOWER switch on the control panel control UUTPWR and OVERRIDE signals, respectively. The UUT overtemperature fault is controlled by the DO2 signal via the computer/controller and self test adapter. The expected results of each test are summarized in table 5-4.

Table 5-4. Interlock Tests Expected Results and Corrective Action

Test No.	Test Name	Command	Expected Results	Corrective Action
A	UUT power off test	UUT POWER switch to OFF	The following LEDs are on: PREAMP, PREAMP RF SOURCE, HIGH POWER MONITOR 6 PORT and PAM MONITOR SPEC AN. Power supplies indicate they are inhibited.	If all listed LEDs are off, troubleshoot signal paths associated with UUT cable ID and relay K1 on RF test panel. If some listed LEDs are off, check applicable LED. If all power supplies are not inhibited, troubleshoot remote inhibit signal path on interface board. If individual power supply is not inhibited, troubleshoot power supply.
B	UUT power standby test	UUT POWER switch to STBY	Power supplies indicate they are inhibited	If power supplies are not inhibited, troubleshoot control panel UUT POWER switch S1.
C	UUT power on test	UUT POWER switch to ON	All POWER SUPPLY MONITORS LEDs come on.	If no power supplies come on, troubleshoot switch S1 and remote inhibit path on interface board. If some power supplies do not come on, troubleshoot LED circuit and power supply. If +40V power supply indicator does not come on, troubleshoot Power 10 remote inhibit circuit and power 10 power supply.

Table 5-4. Interlock Tests Expected Results and Corrective Action--Continued

Test No.	Test Name	Command	Expected Results	Corrective Action
D	UUT coolfault (air flow) disable test	Self-test switch to PRE, position, blower switch to ON, DO2 to logic 0 (UUT overtemp), DTOUT5 to logic 1 (power enable)	REMOTE INHIBIT indicator on power supplies comes on	Troubleshoot interlock logic circuit on interface board.
E	UUT coolfault (air flow) enable test	Preamp or lookdown driver UUT installed on test set	REMOTE INHIBIT indicator on power supplies goes out	Troubleshoot interlock logic circuit on interface board.
F	UUT overtemp fault enable test	DO2 to logic 1	REMOTE INHIBIT indicator on power supplies comes on	Troubleshoot interlock logic circuit on interface board.

5.3.2.6 RF Test Panel Test.- The RF test panel test is limited to verifying the indicators (controlled by RF panel relays) when each UUT is installed (simulated by self-test adapter) and by positioning switches on the RF test panel. The RF signal path is tested as part of the maintenance and calibration procedure. Unless otherwise specified, switches are in the REM (remote) position. The remote position puts switch functions under control of the computer.

Table 5-5. RF Test Panel Tests Expected Results and Corrective Action

Test No.	Test Name	Command	Expected Results	Corrective Action
A	Power module (PAM) UUT test	Self-test adapter switch to PAM position	POWER MODULE and 45W LEDs are lit; PREAMP, LOOKDOWN DRIVER, 180W, and PREAMP RF SOURCE LEDs are not lit.	If faults are present for both the on and off LEDs, troubleshoot relays K1 and K3 and UUT identification circuitry on the control panel. If a fault is present for a single LED, troubleshoot applicable LED circuit.
B	Preamplifier UUT test	Self-test adapter switch to PRE position	PREAMP and PREAMP RF SOURCE LEDs are lit; POWER MODULE, LOOKDOWN DRIVER, 180W, and 45W LEDs are not lit.	If faults are present for both the on and off LEDs, troubleshoot relays K1 and K3 and UUT identification circuitry on the control panel. If a fault is present for a single LED, troubleshoot applicable LED circuit.
C	Lookdown driver test	Self-test adapter switch to LDD position	LOOKDOWN DRIVER and 180W LEDs are lit; POWER MODULE, PREAMP, 45W, and PREAMP RF SOURCE are not lit.	If faults are present for both the on and off LEDs, troubleshoot relays K1 and K3 and UUT identification circuitry on the control panel. If a fault is present for a single LED, troubleshoot applicable LED circuit.
D	Coupled input switch S1 forward test	COUPLED INPUT switch to FORWAR D (up) position	FORWARD LED (above switch) is lit; REFLECTED LED (below switch) is not lit.	If fault is detected, troubleshoot switch S1 and relay K4 on RF test panel and control circuitry on the interface board.

Table 5-5. RF Test Panel Tests Expected Results and Corrective Action--Continued

Test No.	Test Name	Command	Expected Results	Corrective Action
E	Coupled input switch S1 reflected test	COUPLED INPUT switch to REFLECT-ED (up)	REFLECTED LED (below switch) is lit; FORWARD LED (above switch) is not lit.	If fault is detected, troubleshoot switch S1 and relay K4 on RF test panel and control circuitry on the interface board.
F	Monitor switch S2 up position test	Monitor switch S2 to up position	HIGH POWER MONITOR 6 PORT LED and PAM MONITOR SPEC AN LED are lit; HIGH POWER MONITOR SPEC AN LED and PAM MONITOR 6 PORT LED are not lit.	If faults are present for both the on and off LEDs, troubleshoot relay K4 and monitor switch S2. If a fault is present for a single LED, troubleshoot applicable LED circuit.
G	Monitor switch S2 down position test	Monitor switch S2 to down position	HIGH POWER MONITOR SPEC AN LED and PAM MONITOR 6 PORT LED are lit; HIGH POWER MONITOR 6 PORT LED and PAM MONITOR SPEC AN LED are not lit.	If faults are present for both the on and off LEDs, troubleshoot relay K4 and monitor switch S2. If a fault is present for a single LED, troubleshoot applicable LED circuit.

5.3.3 Maintenance and Calibration.- The following paragraphs describe the maintenance and calibration requirements for the PAM test set.

5.3.3.1 Commercial Equipment Calibration.- COTS equipment is to be calibrated in accordance with approved calibration procedures and at intervals determined by the cognizant calibration department, unless otherwise noted. Manufacturers recommended calibration intervals may be used as a guide, but interval adjustments may be necessary to assure that units do not drift outside of acceptable limits between calibrations. Removal of a power meter or multimeter requires the disassembly of the rack mount brackets for all three power meters and the multimeter, therefore, it is recommended that these all be calibrated at the same time. At the completion of calibration, set the instrument to the GPIB address as indicated per the manufacturer's procedures. Install the instrument per drawing AD421401. A list of the COTs equipment is provided in table 5-6.

Table 5-6. COTS Equipment Requiring Calibration

Location	Equipment Name	Equipment VEE Name	GPIB Address	Part Number
Left bay	Oscilloscope	Scope	1401	PM3380B
Right bay	Signal Generator	SigGen	1403	52024
Right bay	Power Supply Mainframe			HP66000
Slot 1	Power Module, 35V/4.5A	PS1	140500	HP6103A
Slot 2	Power Module, 35V/4.5A	PS2	140501	HP6103A
Slot 3	Power Module, 35V/4.5A	PS3	140502	HP6103A
Slot 4	Power Module, 60V/4.5A	PS4	140503	HP6104A
Slot 5	Power Module, 35V/4.5A	PS6	140504	HP6103A
Left bay	Power Supply, 50V/40A	PS5	1406	162B-55040
Left bay (bottom meter)	Power Meter (Peak Sensor)	PwrMtr1	1413	GT8542B
Left bay (middle meter)	Power Meter (Modulation Sensors)	PwrMtr2	1414	GT8542B
Left bay (top meter)	Power Meter (Modulation Sensors)	PwrMtr3	1415	GT8542B
RF panel	Peak Power Sensor (Qty 2)			GT80350A
6- port	Modulation Power Sensor (Qty 4)			
Right bay	Spectrum Analyzer	SpecAn	1418	HP8560E
Left bay	Multimeter	Multimeter	1422	2001

5.3.3.2 Custom Equipment Power Supply Adjustments.- Custom equipment power supply adjustments should be verified every six months or whenever a repair is made to the power supplies. Commercial equipment must be calibrated in accordance with paragraph 5.3.3.1 prior to running the calibration of the custom equipment. The custom equipment power supply adjustments must be performed prior to performing RF path loss calibration in paragraph 5.3.3.3.

1. Turn off PAM test console power.

2. Remove the screws securing the front panel flanges of the RF test panel and control panel to the console; slide the panels out to provide access to the power supply adjustments.

3. Verify that the terminal switch on the front panel of the DMM is in the FRONT position.

4. Connect the appropriate red and black test probes to the DMM HI and LO terminals, respectively.

5.3.3.2.1 RF Test Panel Power Supply PS1 Adjustments.- To adjust the +5 , +15, and -15- Volt dc outputs of power supply PS1, perform the following procedure:

****
WARNING
****

Lethal voltages are present on power supply ac input terminals. Injury or death can result from contact with live circuits.

1. Turn on PAM test set power.

2. Connect the DMM black test probe with suitable clip to chassis ground.

3. Connect the DMM red test probe to the OUT1+ terminal of power supply PS1.

4. Verify that the voltage is +5.0 (±0.1) volts dc. If voltage is correct, go to step 5. If voltage is not correct, adjust the V ADJ1 trimpot on the power supply, as necessary, to obtain a voltage of +5.0 (±0.1) volts dc, and go to step 5. If the voltage cannot be adjusted to the desired value, refer to the publication for troubleshooting information on the power supply.

5. Connect the DMM red test probe to the terminal of power supply PS1.

6. Verify that the voltage is +15.0 (±0.1) volts dc. If voltage is correct, go to step 7. If voltage is not correct, adjust the V ADJ2 trimpot on the power supply, as necessary, to obtain a voltage of +15.0 (±0.1) volts dc, then go to step 7. If the voltage cannot be adjusted to the desired value, refer to the publication for troubleshooting information on the power supply.

7. Connect the DMM red test probe to the OUT3+ terminal of power supply PS1.

8. Verify that the voltage is -15.0 (±0.1) volts dc. If voltage is correct, go to step 9. If voltage is not correct, adjust the V ADJ3 trimpot on the power supply, as necessary, to obtain a voltage of -15.0 (±0.1) volts dc, then go to step 9. If the voltage cannot be adjusted to the desired value, refer to the publication for troubleshooting information on the power supply.

9. Disconnect the DMM red and black test probes from the power supply.

10. Turn off PAM test console power.

11. Reinstall RF test panel.

5.3.3.2.2 Control Panel Power Supply PS1 Adjustments.- To adjust the +28 Volt dc output of power supply PS1, perform the following procedure:

1. Connect the DMM black test probe to the V- terminal of power supply PS1.

2. Connect the DMM red test probe to the V+ terminal of power supply PS1.

****
WARNING
****

Lethal voltages are present on power supply ac input terminals. Injury or death can result from contact with live circuits.

3. Turn on PAM test console power.

4. Verify that the voltage is +28.0 (±0.1) volts dc. If voltage is correct, go to step 5. If voltage is not correct, adjust the trimpot on the power supply, as necessary, to obtain a voltage of +28.0 (±0.1) volts dc, and then go to step 5. If the voltage cannot be adjusted to the desired value, refer to the publication for troubleshooting information on the power supply.

5. Turn off PAM test console power.

6. Disconnect the DMM red and black test probes from the power supply.

5.3.3.3 RF Path Loss Calibration.- The RF path loss calibration should be verified at 6-month intervals or whenever a repair is made to any component in the RF path, including external cables. Commercial equipment must be calibrated in accordance with paragraph 5.3.3.1, and the custom equipment power supplies must be adjusted in accordance with paragraph 5.3.3.2 prior to performing RF path loss calibration. RF path loss is measured and stored in a calibration data file on the computer. This data is used during UUT tests to assure that the power at the end of the cable

connected to the UUT is known. Power-level settings for the signal generator are increased to overcome the loss in the source path, and power measurements are adjusted to overcome loss in the monitoring path. Accurate calibration requires that identical configurations of cables and adapters be used for calibration and UUT testing. Do not substitute any cables, unless the substitutions are permanent. All paths are measured for frequencies of 1200, 1250, 1300, 1350, and 1400 MHz.

5.3.3.3.1 RF Path Loss Calibration Initiation.- The RF path loss tests are computer controlled. Specific instructions for running the tests are given on the computer monitor. A "Test Executive" program provides the operating environment and data logging functions for these tests. Refer to the Test Executive Users manual for instructions on any additional capability. It is assumed that the operator is familiar with the basic operation of Microsoft Windows and network log-in procedures. The following are minimum instructions to initiate testing:

1. Verify that the PAM test console power is on and that all equipment in the console and computer/controller is operating.

2. Log into the user account on the network, if required, and run Microsoft Windows.

3. Double-click on the **PAM Test Set** icon to initiate HP VEE.

NOTE

Wait until loading is completed before going to step 4.

4. Using the mouse, click on the **START TEST EXEC** button.

NOTE

Unless otherwise indicated, all actions on the computer/controller are performed using the mouse.

5. Select the **CALIBRATION** menu item and click on the **RUN** button at the base of the screen.

NOTE

If the **RUN** button is not visible, ensure that the HP VEE window is maximized. If necessary, press the <CTRL>, <SHIFT>, <ALT>, and <4> keys simultaneously to place the monitor in 1280 x 1024 resolution mode.

6. Respond, as necessary, to the displayed user input data boxes for part number, user ID, serial number, and job number.

NOTE

A **TEST SELECTION MENU, MAINTCAL TEST LOG DISPLAY**, and other test status items will be displayed.

7. On the menu, click on the **RUN** button to initiate testing over the entire range of tests.

NOTE

The operator is prompted to manually perform the following initial setup prior to initiating any testing.

8. Place the UUT POWER switch on the control panel to the ON position.

9. Place the BLOWER switch on the control panel to the LOW POWER position.

10. Install self-test adapter PN AD421785G01 on control panel connector J1; place the mode switch on the adapter to the PRE position.

11. Place switches S1 and S2 on the RF test panel to the REM (remote) position.

NOTE

The computer sets all programmable power supplies to zero volt, sets DTOUT5 signal to logic 0 to disable the power supplies, and sets DO3 to a logic 0 to clear the overtemperature interlock on DI3.

12. Connect the power sensor A of each of three power meters to the CALIBRATOR output and press the ZERO/CAL button on each power sensor. The sensors must be connected to the calibrator for their corresponding meter only.

13. Connect the power sensor B of each of three power meters to the CALIBRATOR output and press the ZERO/CAL button on each power sensor.

14. Replace the sensors to the following locations:

Sensor	Location
Top power meter sensor A	6- Port assy P3
Top power meter sensor B	6- Port assy P4
Middle power meter sensor A	6- Port assy P5
Bottom power meter sensor B	6- Port assy P6
Bottom power meter sensor A	(No connection)
Middle power meter sensor B	(No connection)

15. Follow the instructions displayed on the monitor to perform tests specified in the following paragraphs.

5.3.3.3.2 AT1 Initial Adjustments.-

1. The operator is prompted to do the following:

   Place sensor A of the bottom power meter on J104 of the RF test panel
   Place sensor B of the bottom power meter on J105 of the RF test panel
   Connect P1 of cable PN AA421434G07 to J4 of RF test panel
   Connect P1 of cable PN AA421434G08 to J5 of RF test panel
   Using adapter, connect P2 of cable PN AA421437G07 to P2 of cable PN AA421437G08
   Connect 50- ohm load to J1 of RF test panel
   Connect 50- ohm load to J2 of RF test panel
   Set switch on self-test adapter to PRE position.

2. The computer program does the following:

   Sets RFCTL signal to logic 0 (CW RF)
   Switches K5 to route the high power monitor path to the 6-port
   Sets signal generator for 0 dBm at 1400 MHz.

3. The bottom power meter continuously indicates the power difference between sensor A and sensor B.

4. The operator is prompted to set adjustable attenuator AT1 on RF test panel for an indication of 64.3 (±0.5) dB on the bottom power meter.

NOTE

Final calibration of the PAM test console consists of making specific RF measurements that can then be used in calculations when testing UUTs. The remaining paragraphs in RF path loss calibration make the measurements which are stored by the program and are used by the program to perform calculations when testing the UUTs. The program prompts the operator to perform the manual connections and setups and then automatically stores the measurements in a data base.

5.3.3.3.3 Preamp RF Source Forward Path Measurement.-

1. The operator is prompted to do the following:

   Place sensor A of the middle power meter on J1 of the RF test panel
   Connect P1 of cable PN AA421434G07 to J4 of RF test panel
   Place sensor B of the middle power meter on P2 of cable PN AA421434G07
   Verify that switch on self-test adapter is set to PRE position.

2. The computer program does the following:

   Sets FWDREV control to forward
   Sets RFCTL signal to logic 0 (CW RF)
   Sets signal generator for 0 dBm at 1200 MHz.

3. The computer program measures and stores the power level at 1200, 1250, 1350, and 1400 MHz as measured by sensor A of the middle power meter.

5.3.3.3.4 Preamp RF Source Reverse Path Measurement.-

1. The operator is prompted to do (verify) the following:

   Place sensor A of the middle power meter on J1 of the RF test panel
   Connect P1 of cable PN AA421434G07 to J4 of RF test panel;
   P2 of cable PN AA421434G07 is not connected
   Verify that switch on self-test adapter is set to PRE position.

2. The computer program does the following:

   Sets FWDREV control to reverse
   Sets RFCTL signal to logic 0 (CW RF)
   Sets signal generator for 0 dBm at 1200 MHz.

3. The computer program measures and stores the power level at 1200, 1250, 1350, and 1400 MHz as measured by sensor A of the middle power meter.

5.3.3.3.5 Preamp RF Monitor Path Measurement.-

1. The operator is prompted to do (verify) the following:

   Place sensor A of the middle power meter on J1 of the RF test panel
   Connect P1 of cable PN AA421434G07 to J4 of RF test panel
   Place sensor B of the middle power meter on J2 of the RF test panel
   Connect P1 of cable PN AA421434G08 to J5 of RF test panel
   Using adapter, connect P2 of cable AA421434G08 to P2 of cable AA421434G07
   Verify that switch on self-test adapter is set to PRE position.

2. The computer program does the following:

   Sets FWDREV control to forward
   Sets RFCTL signal to logic 0 (CW RF)
   Sets signal generator for 0 dBm at 1200 MHz.

3. The computer program measures and stores the power level at 1200, 1250, 1350, and 1400 MHz as measured by sensor A of the middle power meter.

5.3.3.3.6 Preamp RF Monitor Tuning Path Measurement.-

1. The operator is prompted to do (verify) the following:

   Place sensor A of the middle power meter on J1 of the RF test panel
   Connect P1 of cable PN AA421434G07 to J4 of RF test panel
   Place sensor B of the middle power meter on J2 of the RF test panel
   Connect P1 of cable PN AA421434G13 to J5 of RF test panel
   Using adapter, connect P2 of cable PN AA421434G13 to P2 of cable PN AA421434G07
   Verify that switch on self test adapter is set to PRE position.

2. The computer program does the following:

   Sets FWDREV control to forward
   Sets RFCTL signal to logic 0 (CW RF)
   Sets signal generator for 0 dBm at 1200 MHz.

3. The computer program measures and stores the power level at 1200, 1250, 1350, and 1400 MHz as measured by sensor A of the middle power meter.

5.3.3.3.7 Lookdown Driver RF Monitor Path Measurement.-

1. The operator is prompted to do (verify) the following:

   Place sensor A of the bottom power meter on J1 of the RF test panel
   Connect P1 of cable PN AA421434G07 to J4 of RF test panel
   Place sensor B of the bottom power meter on J2 of the RF test panel
   Connect P1 of cable PN AA421434G10 to J5 of RF test panel
   Using adapter, connect P2 of cable PN AA421434G10 to P2 of cable PN AA421434G07
   Verify that switch on self-test adapter is set to PRE position.

2. The computer program does the following:

   Sets FWDREV control to forward
   Sets RFCTL signal to logic 0 (CW RF)
   Sets signal generator for 0 dBm at 1200 MHz.

3. The computer program measures and stores the power level at 1200, 1250, 1350, and 1400 MHz as measured by sensor A of the middle power meter.

5.3.3.3.8 PAM RF Monitor Path Measurement.-

1. The operator is prompted to do (verify) the following:

   Place sensor A of the middle power meter on J1 of the RF test panel
   Connect P1 of cable PNAA421434G07 to J4 of RF test panel
   Place sensor B of the middle power meter on J2 of PAM test fixture
   Connect P2 of cable PN AA421434G07 to J3 of PAM test fixture
   Connect 50- Ohm termination to J3 of PAM test fixture
   Verify that switch on self-test adapter is set to PRE position.

2. The computer program does the following:

   Sets FWDREV control to forward
   Sets RFCTL signal to logic 0 (CW RF)
   Sets signal generator for 0 dBm at 1200 MHz.

3. The computer program measures and stores the power level at 1200, 1250, 1350, and 1400 MHz as measured by sensor A of the middle power meter.

5.3.3.3.9 PAM RF Source Forward Path Measurement.-

CAUTION

Switching the modes on the self-test adapter while the amplifier panel is on can cause damage to relay K3 on the RF test panel. Operation of the amplifier panel can be verified by presence of current being drawn from PS4 (slot 4). If the amplifier panel is on, place UUT POWER switch to the STANDBY position before switching modes on the self-test adapter.

1. The operator is prompted to do (verify) the following:

   Place sensor A of the bottom power meter on J1 of the RF test panel
   Place sensor B of the bottom power meter on J2 of the RF test panel
   Connect P1 of cable PN AD421966G01 to J3 of RF test panel
   Connect P1 of cable PN AA421434G13 to J5 of RF test panel
   Using adapter, connect P2 of cable PN AD421966G01 to P2 of cable PN AA421434G13
   Verify that switch on self-test adapter is set to PAM position.

2. The computer program does the following:

   Disables signal generator
   Sets FWDREV control to forward
   Generates RFCTL, charge enable, pretrigger, and strobe signals
   Sets DTOUT5 signal to logic 1 (enables power supplies and RF pulses)
   Sets signal generator for 1 dBm at 1200 MHz and enabled.

3. The computer program measures and stores the peak pulsed power level 75 microseconds from the start of the pulse at 1200, 1250, 1350, and 1400 MHz as measured by sensors A and B of the bottom power meter.

5.3.3.3.10 Final Calculations.- After all measurements have been taken, the computer/controller makes final calculations and stores the results in a file named CALDATA.DAT. The software program then reads the applicable data from memory during UUT testing.

5.3.3.4 Maintenance Procedures.- The following paragraphs describe maintenance procedures for the PAM test set.

5.3.3.4.1 Air Filters.- The PAM test set has three air filters. They are located at the rear of the PAM test console for the console blowers. The air filters are to be inspected and cleaned at periodic intervals determined by the amount of time each day that the fans are operational and the ambient dust level at the facility.

CAUTION

There are no overtemperature interlocks on the PAM test console. If the air filters are clogged, an overtemperature condition could occur and equipment damage may result. If the surface of the PAM test console feels warm, immediately inspect the air filters and the operation of the fans.

5.3.3.4.2 Connector Inspection.- All coaxial connectors on cables and panel jacks that are subject to frequent mating and unmating are to be inspected and cleaned, as necessary. Clean coaxial connectors with a lint-free swab and isopropyl alcohol, or the materials recommended in the connector care instructions in the Vector Network Analyzer Calibration Kit. The use of "connector savers" is not recommended unless it is verified that they will always be used on the same connection as when they were calibrated. If any damage is noted, perform the following procedure to repair the connector.

5.3.3.4.2.1 For feedthru connectors on panels and test adapters, replace the bulkhead feedthru connector in the panel. An identical replacement is preferable, but the loss would be calibrated out of a functionally-similar part.

5.3.3.4.2.2 Damaged adapters must be replaced. An identical replacement is preferable, but the loss would be calibrated out of a functionally-similar part.

5.3.3.4.2.3 Replacement of connectors on the 6-port reflectometer must be done per the methods in the notes of drawing AD421432. The screws holding the sections of the housing together must be removed prior to loosening the SMA-to-N connectors.

5.3.3.4.3 Care of QMI Semi-Flex Cables in the RF Test Panel.- The RF test panel internal cabling makes extensive use of Quality Microwave Interconnects, Inc. (QMI) semi-flexible hard-line, which is a hand-bendable, coaxial cable with properties similar to that of 0.141-inch diameter semi-rigid coaxial cable. When working with these cables observe the following precautions:

1. Bends of 1-inch minimum radius may be made a maximum of 10 times, including the original assembly of the cable in the panel.

2. Bends of 0.25 inch may be made one time; however, this is not recommended.

3. An anti-torque wrench grip point, provided adjacent to each SMA connector, is used to keep the cable from twisting as the SMA connection is rotated.

4. When the cables are subjected to excessive twist, they fail with cracks in the outer conductor. These cracks usually occur adjacent to a connector.

5.3.3.5 Troubleshooting Techniques.- The following paragraphs provide troubleshooting techniques to be used for the RF paths, the interface board, and the amplifier panel.

5.3.3.5.1 RF Path Troubleshooting.- Use the following guidelines when troubleshooting the RF paths:

CAUTION

RF signals having the amplifier panel or the amplifier in the RF test panel in the signal path have high peak-power levels that will damage the spectrum analyzer or the power meter sensors. When measuring these signals route them via cable to J5 on the RF test panel and connect the measurement device to J2 on the RF test panel. Sufficient attenuation is present in the RF test panel between J5 and J2 to protect the test equipment.

1. Protect the test equipment from high-power RF present in signal paths through the amplifier panel or the amplifier in the RF test panel.

2. Retain a copy of the data sheet from the most current calibration that was successful. Variations between calibration sessions should be minimal. A large variation may indicate a trouble area.

3. During troubleshooting, repeat the calibration procedure and use the Pause-On-Fail function to stop the test at the place where there is a failing measurement.

4. Refer to interconnection diagram SD421401 and RF test panel schematic diagram SD421403 to identify components in the RF signal path.

5. Assure that all connections are tight; wiggle each cable while monitoring the response on the test equipment. Damaged cables or loose connections may cause signal variations when cables are wiggled.

6. The audible click that occurs when a relay energizes or deenergizes can be used to verify that the control signal is getting to the applicable relay.

5.3.3.5.2 Interface Board Troubleshooting.- The interface board is oriented in the computer/controller with the components facing up (away from the mother board). The row of

Bergstik headers adjacent to the J1 connector is directly connected to J1 and is a convenient connection point for probing.

5.3.3.5.3 Amplifier Panel Troubleshooting.- The amplifier panel subassemblies listed below are similar to the ARSR-4 preamplifier subassemblies also listed below. Additional troubleshooting information may be obtained by referring to the ARSR-4 part numbers. The amplifier panel is not used for preamplifier testing.

Subassembly	PAM Test Set Part Number	ARSR-4 Part Number
Class A Amplifier	AD421426G01	3D56910G01
Class C Amplifier	AD421427G01	3D56911G01
Regulator	AD421428G01	3706J535G01
Preamp Assy (Low power side)	AD421429G01	3D56069G01

CHAPTER 6

CIRCUIT DIAGRAMS

6.1 INTRODUCTION.- This chapter contains schematic diagrams and wiring diagrams for the PAM test set. The types of diagrams are described in the following paragraphs.

6.2 SCHEMATIC DIAGRAMS.- The schematic diagrams for the PAM test set custom equipment are included in separately-bound Appendix B of this TIB. These diagrams show the interconnections between the components of the custom equipment. The schematic diagrams are listed in table 6-1.

6.3 WIRE TABULATIONS.- No wire tabulations are required for the PAM test set.

6.4 WIRING DIAGRAMS.- The interconnecting wiring diagrams for the PAM test set are included in separately bound Appendix B. These diagrams, which show the interconnections between the custom equipment and the COTS equipment in the PAM test console and the external interconnections, are listed in table 6-2.

6.5 CABLE DIAGRAMS.- The cable diagrams for the PAM test set are listed in table 6-3 and are either bound as part of this chapter or are included in Appendix B. Cable drawing numbers prefixed with AA are bound as part of this chapter. Cable drawing numbers prefixed with AD are included in Appendix B.

6.6 PAL EQUATION DOCUMENTS.- Engineering documents describing the programmable array logic (PAL) equations are bound as part of this chapter. These documents are listed in table 6-4.

Table 6-1. Schematic Diagrams

Drawing No.	Description	No. of Sheets
SD420939	Schematic Diagram, Modular Power Supply Cable Assembly	1
SD421402	Schematic Diagram, Control Panel	2
SD421403	Schematic Diagram, RF Test Panel	3
SD421404	Schematic Diagram, Amplifier Panel	1
SD421405	Schematic Diagram, Interface Board	1
SD421410	Schematic Diagram, PAM Test Fixture	1
SD421428	Schematic Diagram, Regulator	7
SD421429	Schematic Diagram, Preamplifier Assembly	5

Table 6-2. Interconnecting Wiring Diagrams

Drawing No.	Description	No. of Sheets
SD421400	Interconnection Diagram	1
SD421401	Interconnection Diagram	1

Table 6-3. Cable Diagrams

Drawing No.	Description	No. of Sheets
AD420920	Cable Assembly, 60 Hz Internal Facility Power	1
AD420921	Cable Assembly, 60 Hz Console Standby Power	1
AD420922	Cable Assembly, Console Interlock	1
AD420923	Cable Assembly, Peripheral Interface Panel 60 Hz Power	1
AD420939	Cable Assembly, Modular Power Supply	1
AD420943	Cable Assembly, MPS 60 Hz Power	1

Table 6-3. Cable Diagrams--Continued

Drawing No.	Description	No. of Sheets
AD420946	Cable Assembly, 60 Hz External Facility Power	1
AD421424	Cable Assembly, Preamplifier Assembly	2
AD421425	Cable Assembly, Lookdown Driver Assembly	2
*AA421434	Cable Assembly, Coaxial	3
*AA421436	Cable Assembly, Power Supply Output and Control	3
AD421437	Cable Assembly, D-Subminiature High Density	1
*AA421438	Cable Assembly, AC Power Input	3
*AA421439	Cable Assembly, Control Panel to DMM	3
AD421440	Cable Assembly, Computer Standby Power	1
*AA421787	Cable Assembly, Computer Interfaces, Ribbon	3
AD421965	Cable, Coax	1
AD421966	Cable, Coax	1

* These drawings are bound as part of this chapter.

Table 6-4. PAL Equation Documents

Drawing No.	Description	No. of Sheets
DA421405	Programmed PAL, Interface Board	5

SH 1	PARENTHETIC IDENTITIES ARE FOR REFERENCE ONLY REVISION STATUS OF ALL SHEETS IS IDENTICAL		REVISIONS			
DWG NO.			REV	DESCRIPTION	DATE	APPROVED
			01	PRE-BASELINE RELEASE	18-Mar-97	
			02	Mod to G14 P1 marker	17-Jun-97	
	APPLICATION					
	NEXT ASSY	USED ON				
	SEE P/L					

AA421434

SEE SEPARATE PARTS LIST

APPROVED			
DRAFTER / ORIG J. Kneale	ENGINEER	COMPUTER GENERATED DOCUMENT MANUAL CHANGES NOT PERMITTED	INTERPRET DRAWING IAW DOD-STD-100
CHECKER	PRGM ENGRG	INTERPRET DIMENSIONS AND TOLERANCES IAW ANSI Y14.5M - 1982	UNLESS OTHERWISE SPECIFIED DIMENSIONS ARE IN INCHES
DFTG SUPV	MFG	CONTRACT NO. — DTFA01-88-C-00037-ILS	
RELBL	ELEC SENS DVC	ORIGINAL DATE — 18-Mar-97	
MAINT /SYS SAF	PARTS ENGRG	NORTHROP GRUMMAN CORPORATION BALTIMORE, MARYLAND 21203 USA	
SAFETY	EMI/EMC/TEMPEST	**COAXIAL CABLE ASSEMBLY PAMTS TEST SET**	
CUSTOMER	ELEC EN	SIZE: **A** / CAGE CODE: **18323**	DRAWING NUMBER: **AA421434** / REV: **01**
		SCALE: NONE	SHEET 1 0F 3

N:\SSE\PAMTS\DWG\AA421434.DOC

1 MARK AND APPLY CABLE MARKERS PER MARKER TABLE.

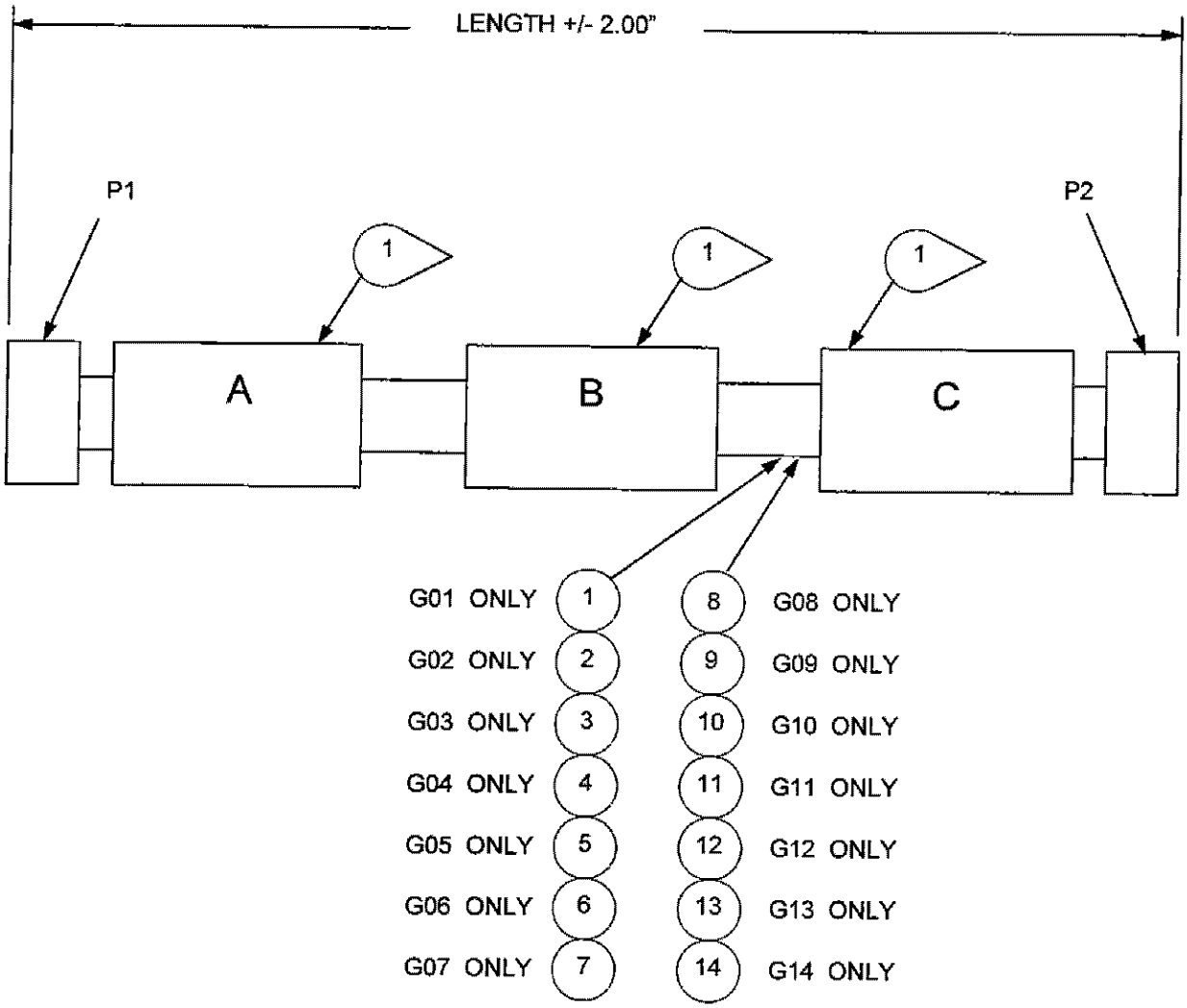

SIZE	CAGE CODE	DRAWING NUMBER	
A	18323	AA421434	
SCALE: NONE		REV 01	SHEET 2

MARKER TABLE

Length	P2 (REF)	Marker A	Marker B	Marker C	P1 (REF)
48	SMA(M)	P1 MATES WITH J101 OF RF TEST PANEL	18323 ASSY AA421434G01	P2 MATES WITH RF OUT OF SIGNAL GENERATOR	SMA(M)
48	SMA(M)	P1 MATES WITH J104 OF RF TEST PANEL	18323 ASSY AA421434G02	P2 MATES WITH J100 OF SIX PORT ASSY	SMA(M)
48	SMA(M)	P1 MATES WITH J105 OF RF TEST PANEL	18323 ASSY AA421434G03	P2 MATES WITH J101 OF SIX PORT ASSY	SMA(M)
48	SMA(M)	P1 MATES WITH J103 OF RF TEST PANEL	18323 ASSY AA421434G04	P2 MATES WITH J1 OF AMP PANEL	SMA(M)
48	SMA(M)	P1 MATES WITH J102 OF RF TEST PANEL	18323 ASSY AA421434G05	P2 MATES WITH J4 OF AMP PANEL	SMA(M)
21	SMA(M)	P1 MATES WITH J7 OF RF TEST PANEL	18323 ASSY AA421434G06	P2 MATES WITH INPUT OF SPEC. ANALYZER	SMA(M)
36	SMA(M)	P1 MATES WITH J4 OF RF TEST PANEL	18323 ASSY AA421434G07	P2 MATES WITH J1 OF PREAMP UUT	SMA(M)
36	TNC(M)	P1 MATES WITH J5 OF RF TEST PANEL	18323 ASSY AA421434G08	P2 MATES WITH J4 OF PREAMP UUT	N(M)
30	TNC(M)	P1 MATES WITH J3 OF RF TEST PANEL	18323 ASSY AA421434G09	P2 MATES WITH J14 OF LKDN DRVR UUT	TNC(M)
36	TNC(M)	P1 MATES WITH J5 OF RF TEST PANEL	18323 ASSY AA421434G10	P2 MATES WITH J10/11 OF LKDN DRVR UUT	TNC(M)
24	TNC(M)	P1 MATES WITH J3 OF RF TEST PANEL	18323 ASSY AA421434G11	P2 MATES WITH J1 OF PAM FIXTURE	SMA(M)
24	TNC(M)	P1 MATES WITH J6 OF RF TEST PANEL	18323 ASSY AA421434G12	P2 MATES WITH J3 OF PAM FIXTURE	N(M)
36	TNC(M)	P1 MATES WITH J5 OF RF TEST PANEL	18323 ASSY AA421434G13	P2 MATES WITH PREAMP UUT	SMA(M)
36	SMA(M)	P1 MATES WITH J4 OF RF TEST PANEL	18323 ASSY AA421434G14	P2 MATES WITH J1 OF PAM	SMA(M)

SIZE	CAGE CODE	DRAWING NUMBER	
A	18323	AA421434	
SCALE: NONE		REV 01	SHEET 3

SH 1	PARENTHETIC IDENTITIES ARE FOR REFERENCE ONLY REVISION STATUS OF ALL SHEETS IS IDENTICAL	REVISIONS			
DWG NO.		REV	DESCRIPTION	DATE	APPROVED
		01	PRE-BASELINE RELEASE		
	APPLICATION				
	NEXT ASSY / USED ON				

AA421436

SEE SEPARATE PARTS LIST

APPROVED			
DRAFTER / ORIG	ENGINEER	COMPUTER GENERATED DOCUMENT MANUAL CHANGES NOT PERMITTED	INTERPRET DRAWING IAW DOD-STD-100
CHECKER	PRGM ENGRG	INTERPRET DIMENSIONS AND TOLERANCES IAW ANSI Y14.5M - 1982	UNLESS OTHERWISE SPECIFIED DIMENSIONS ARE IN INCHES
DFTG SUPV	MFG	CONTRACT NO. — DTFA01-88-C-00037-ILS	
RELBL	ELEC SENS DVC	ORIGINAL DATE — 10-Feb-97	
MAINT /SYS SAF	PARTS ENGRG	NORTHROP GRUMMAN CORPORATION BALTIMORE, MARYLAND 21203 USA	
SAFETY	EMI/EMC/TEMPEST	**CABLE ASSEMBLY Power Supply Output and Control**	
CUSTOMER	ELEC EN	SIZE: A / CAGE CODE: 18323	DRAWING NUMBER: AA421436 / REV: 01
		SCALE: NONE	SHEET 1 OF 3

C:\ARSR4\PAMTS\AA421436.DOC

1 MARK AND APPLY CABLE MARKERS.

2 APPLY EXPANDABLE SLEEVING

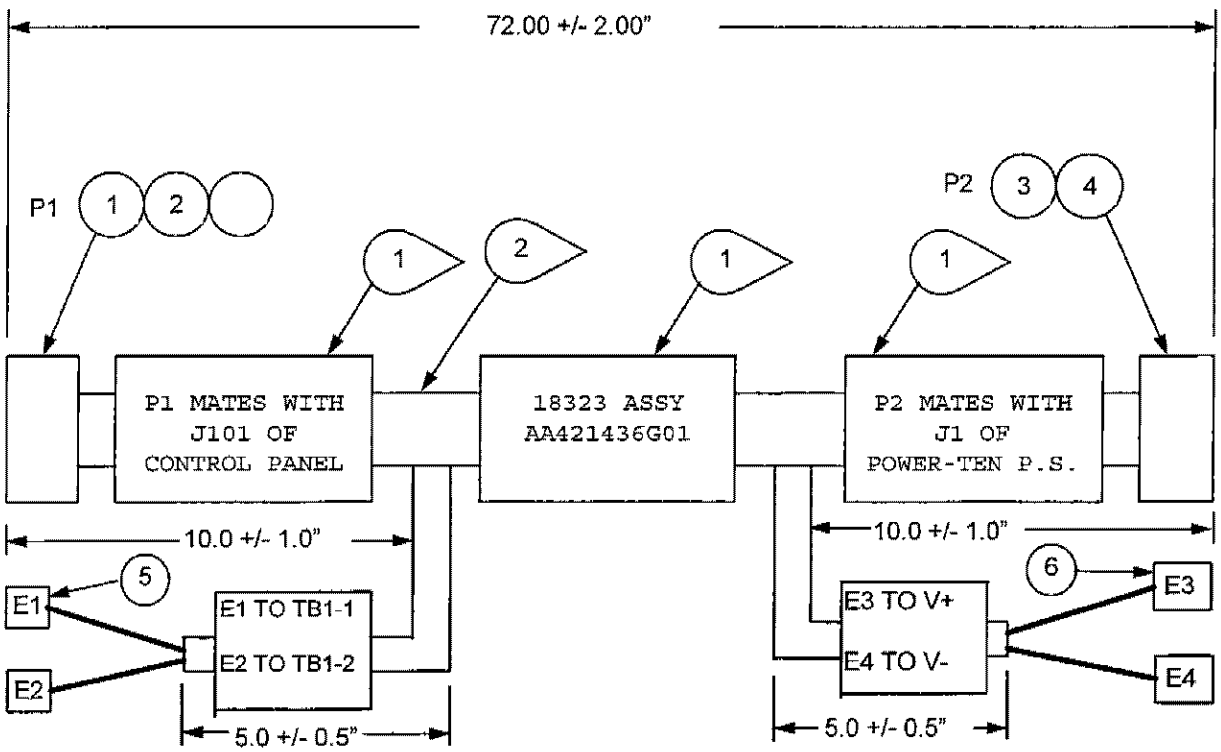

SIZE	CAGE CODE	DRAWING NUMBER	
A	18323	AA421436	
SCALE: NONE		REV 01	SHEET 2

WIRE TABLE FOR G01

P1	P2	WIRE TYPE	COMMENTS
2	2	AWG24	
5	-	AWG24	JUMPER TO PIN 6
6	-	AWG24	JUMPER TO PIN 5
7	7	AWG24	
12	12	TSP AWG24	TWIST WITH PIN 13
13	13	TSP AWG24	TWIST WITH PIN 12
14	14	AWG24	
E1	E3	AWG 8	
E2	E4	AWG 8	

SIZE	CAGE CODE	DRAWING NUMBER	
A	18323	AA421436	
SCALE: NONE		REV 01	SHEET 3

SH 1	PARENTHETIC IDENTITIES ARE FOR REFERENCE ONLY REVISION STATUS OF ALL SHEETS IS IDENTICAL	REVISIONS			
DWG NO.		REV	DESCRIPTION	DATE	APPROVED
		01	PRE-BASELINE RELEASE		
	APPLICATION				
	NEXT ASSY / USED ON				

AA421438

SEE SEPARATE PARTS LIST

APPROVED			
DRAFTER / ORIG	ENGINEER	COMPUTER GENERATED DOCUMENT MANUAL CHANGES NOT PERMITTED	INTERPRET DRAWING IAW DOD-STD-100
CHECKER	PRGM ENGRG	INTERPRET DIMENSIONS AND TOLERANCES IAW ANSI Y14.5M - 1982	UNLESS OTHERWISE SPECIFIED DIMENSIONS ARE IN INCHES
DFTG SUPV	MFG	CONTRACT NO. — DTFA01-88-C-00037-ILS	
RELBL	ELEC SENS DVC	ORIGINAL DATE — 12-Feb-97	
MAINT /SYS SAF	PARTS ENGRG	NORTHROP GRUMMAN CORPORATION BALTIMORE, MARYLAND 21203 USA	
SAFETY	EMI/EMC/TEMPEST	**CABLE ASSEMBLY AC Power Input**	
CUSTOMER	ELEC EN	SIZE: A	CAGE CODE: 18323
		DRAWING NUMBER: AA421438	REV: 01
		SCALE: NONE	SHEET 1 OF 3

C:\ARSR4\PAMTS\AA421438.DOC

1 MARK AND APPLY CABLE MARKERS.

2 APPLY EXPANDABLE SLEEVING

3 ALL WIRE TO BE AWG 12 UNLESS OTHERWISE SPECIFIED

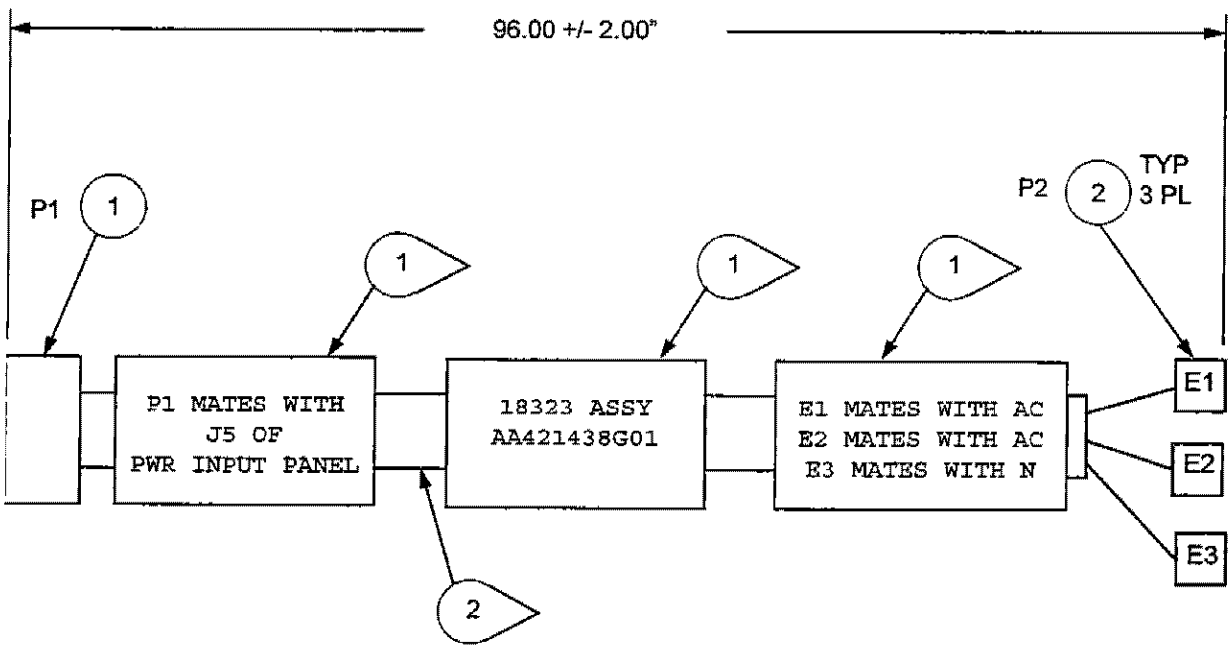

SIZE	CAGE CODE	DRAWING NUMBER	
A	18323	AA421438	
SCALE: NONE		REV 01	SHEET 2

WIRE TABLE FOR G01

P1	
A	E1
E	E2
F	E3
G	CHASSIS

SIZE	CAGE CODE	DRAWING NUMBER	
A	18323	AA421438	
SCALE: NONE		REV 01	SHEET 3

SH 1	PARENTHETIC IDENTITIES ARE FOR REFERENCE ONLY REVISION STATUS OF ALL SHEETS IS IDENTICAL		REVISIONS			
DWG NO.			REV	DESCRIPTION	DATE	APPROVED
			01	PRE-BASELINE RELEASE		
	APPLICATION					
	NEXT ASSY	USED ON				

AA421439

SEE SEPARATE PARTS LIST

APPROVED			
DRAFTER / ORIG J. Bruns	ENGINEER J. Bruns	COMPUTER GENERATED DOCUMENT MANUAL CHANGES NOT PERMITTED	INTERPRET DRAWING IAW DOD-STD-100
CHECKER	PRGM ENGRG J. Kneale	INTERPRET DIMENSIONS AND TOLERANCES IAW ANSI Y14.5M - 1982	UNLESS OTHERWISE SPECIFIED DIMENSIONS ARE IN INCHES
DFTG SUPV	MFG	CONTRACT NO. — DTFA01-88-C-00037-ILS	
RELBL	ELEC SENS DVC	ORIGINAL DATE — 17-Jan-97	
MAINT /SYS SAF	PARTS ENGRG	NORTHROP GRUMMAN CORPORATION BALTIMORE, MARYLAND 21203 USA	
SAFETY	EMI/EMC/TEMPEST	**CABLE ASSEMBLY** **Control Panel to DMM**	

CUSTOMER	ELEC EN	SIZE	CAGE CODE	DRAWING NUMBER	REV
		A	18323	AA421439	01
		SCALE: NONE			SHEET 1 OF 3

C:\MSOFFICE\WINWORD\TEMPLATE_CABLE.DOT

1. MARK AND APPLY CABLE MARKERS.
2. APPLY EXPANDABLE SLEEVING
3. ALL WIRE TO BE TWINAX PER FIND NO.
4. STRIP INSULATION TO EXPOSE DIELECTRIC 0.25" +/- 0.05"; STRIP DIELECTRIC TO EXPOSE CENTER CONDUCTOR 0.25" +/- 0.05"

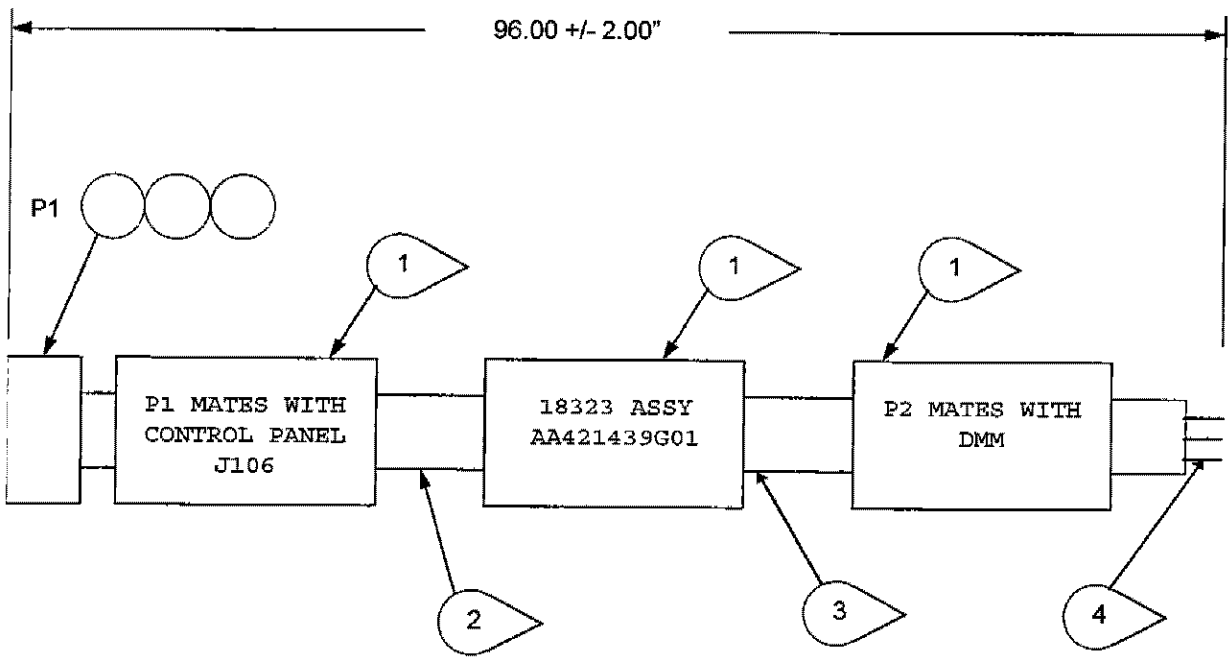

SIZE	CAGE CODE	DRAWING NUMBER	
A	18323	AA421439	
SCALE: NONE		REV 01	SHEET 2

WIRE TABLE FOR G01

P1	P2
A	CH1H
B	CH1L
C	CH2H
D	CH2L
E	CH3H
F	CH3L
G	CH4H
H	CH4L
J	CH5H
K	CH5L
L	CH6H
M	CH6L
N	CH7H
P	CH7L
R	CH8H
S	CH8L
T	CH9H
U	CH9L
W	CH10H
X	CH10L
* Y	N/C

* Jumper shields together and connect to P1 pin Y

SIZE	CAGE CODE	DRAWING NUMBER	
A	18323	AA421439	
SCALE: NONE		REV 01	SHEET 3

SH 1	PARENTHETIC IDENTITIES ARE FOR REFERENCE ONLY REVISION STATUS OF ALL SHEETS IS IDENTICAL	REVISIONS			
DWG NO.		REV	DESCRIPTION	DATE	APPROVED
		01	PRE-BASELINE RELEASE		
	APPLICATION				
	NEXT ASSY / USED ON				

AA421787

SEE SEPARATE PARTS LIST

APPROVED			
DRAFTER / ORIG	ENGINEER	COMPUTER GENERATED DOCUMENT MANUAL CHANGES NOT PERMITTED	INTERPRET DRAWING IAW DOD-STD-100
CHECKER	PRGM ENGRG	INTERPRET DIMENSIONS AND TOLERANCES IAW ANSI Y14.5M - 1982	UNLESS OTHERWISE SPECIFIED DIMENSIONS ARE IN INCHES
DFTG SUPV	MFG	CONTRACT NO. — DTFA01-88-C-00037-ILS	
RELBL	ELEC SENS DVC	ORIGINAL DATE — 10-Sep-96	
MAINT /SYS SAF	PARTS ENGRG	NORTHROP GRUMMAN CORPORATION BALTIMORE, MARYLAND 21203 USA	
SAFETY	EMI/EMC/TEMPEST	**CABLE ASSEMBLY Computer Interfaces, Ribbon**	
CUSTOMER	ELEC EN	SIZE: A / CAGE CODE: 18323	DRAWING NUMBER: AA421787 / REV: 01
		SCALE: NONE	SHEET 1 OF 3

C:\MSOFFICE\WINWORD\TEMPLATE_CABLE.DOT

1 MARK PER PS83869RS PER TABLE 1

2 APPLY EXPANDABLE SLEEVING

3 MASS TERMINATE ALL CABLES, P1 PIN1 TO P2 PIN 1, ETC

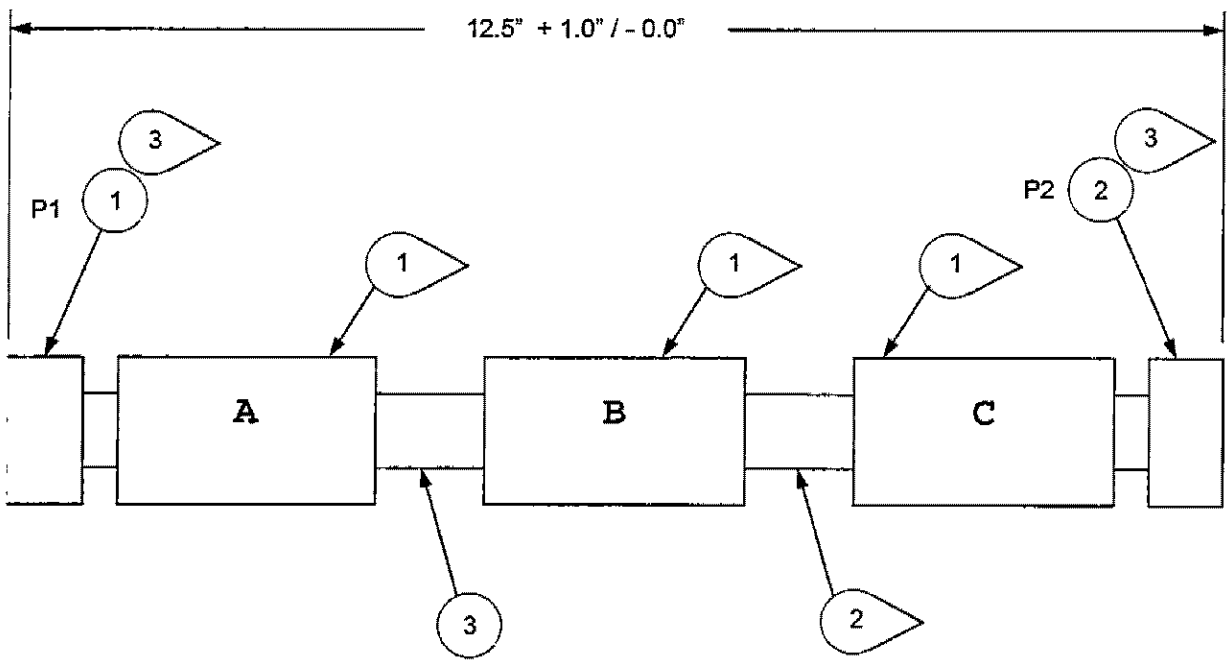

SIZE	CAGE CODE	DRAWING NUMBER	
A	18323	AA421787	
SCALE: NONE		REV 01	SHEET 2

TABLE 1

A	B	C
P1 MATES WITH J2 OF INTERFACE BOARD	18323 ASSY AA421787G01	P2 MATES WITH J1 OF DT2819
P1 MATES WITH J3 OF INTERFACE BOARD	18323 ASSY AA421787G02	P2 MATES WITH COMPUTER COM 1

SIZE	CAGE CODE	DRAWING NUMBER	
A	18323	AA421787	
SCALE: NONE		REV 01	SHEET 3

SH 1	PARENTHETIC IDENTITIES ARE FOR REFERENCE ONLY REVISION STATUS OF ALL SHEETS IS IDENTICAL	REVISIONS			
DWG NO.		REV	DESCRIPTION	DATE	APPROVED
		01	PRE-BASELINE RELEASE	8-May-97	
	APPLICATION				
	NEXT ASSY / USED ON				
	AD421405 / PAMTS				

DA421405

CAUTION
SENSITIVE ELECTRONIC DEVICES

SEE SEPARATE PARTS LIST

APPROVED			
DRAFTER / ORIG J. KNEALE	ENGINEER	COMPUTER GENERATED DOCUMENT MANUAL CHANGES NOT PERMITTED	INTERPRET DRAWING IAW DOD-STD-100
CHECKER	PRGM ENGRG	INTERPRET DIMENSIONS AND TOLERANCES IAW ANSI Y14.5M - 1982	UNLESS OTHERWISE SPECIFIED DIMENSIONS ARE IN INCHES
DFTG SUPV	MFG	CONTRACT NO. — DTFA01-88-C-00037-ILS	
RELBL	ELEC SENS DVC	ORIGINAL DATE — 8-May-97	
MAINT /SYS SAF	PARTS ENGRG	NORTHROP GRUMMAN CORPORATION BALTIMORE, MARYLAND 21203 USA	
SAFETY	EMI/EMC/TEMPEST	**PROGRAMMED PAL INTERFACE BOARD**	
CUSTOMER	ELEC EN	SIZE: **A** / CAGE CODE: **18323** / DRAWING NUMBER: **DA421405** / REV: **01**	
		SCALE: NONE	SHEET 1 OF 5

C:\MSOFFICE\WINWORD\TEMPLATE_CABLE.DOT

1. PURPOSE

The purpose of this document is to delineate the materials, drawings, and procedures necessary to produce Programmable Devices DA421405H01 and DA421405H02.

2. DEVICE PROGRAMMING

2.1 Electrostatic Discharge control program for protection of Electrical and Electronic parts, assemblies and equipment shall be in accordance with DOD-STD-1686, CLASS 1 and DOD-HDBK-263.

2.2 Mark device approximately as shown in Figure 1 using the information provided in Table 1, per part list AD420905 FIND NO. 100.

Figure 1 Device Marking

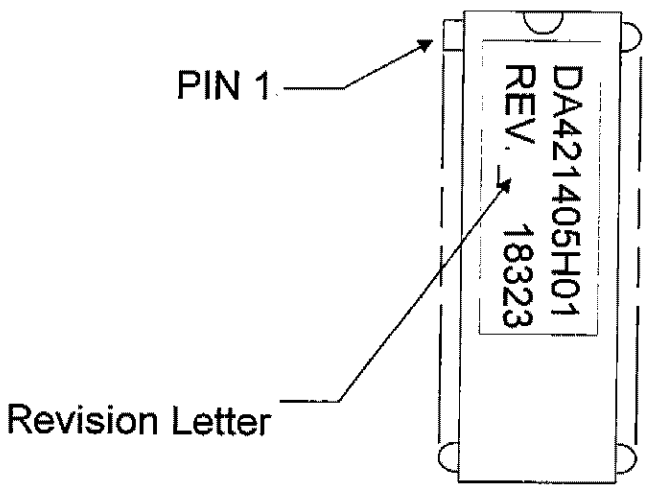

2.3 Program the PAL using the A4TEST.JED file from the diskette DFDA421405P01 referenced in parts list FIND NO. 4. The PAL Equation for the file is provided in the Appendix as identified in Table 2.

2.4 Verify the PALs for the proper Data Checksum.

INSERT CHECKSUM HERE WHEN AVAILABLE

SIZE	CAGE CODE	DRAWING NUMBER	
A	18323	DA421405	
SCALE: NONE		REV 01	SHEET 2

3. DFDA421405P01 PROGRAMMING DATA DISKETTE

3.1 FILES

A4TEST.ABL	Source code referenced in appendix
A4TEST.JED	Data to program into PAL
DA421405.DOC	This document

3.2 LABEL FORMAT

Label the diskettes per the labels below with the appropriate changes to revision, date, and number of diskettes used for any future releases of the software:

DFDA421405P01

Revision: Date:

PAL PROGRAMMING DATA
INTERFACE BOARD
Disk 1 of 1

Northrop Grumman Corporation
Baltimore, Maryland 21203
CAGE Code: 18323

© 1997 Northrop Grumman Corporation
All Rights Reserved

3.3 DISKETTE DUPLICATION

Use either step 1 or step 2 below to duplicate the diskettes for and label the diskettes with the labels shown in paragraph 5 above for delivery

1. Use the following MS-DOS **DISKCOPY** and **DISKCOMP** commands to copy the diskettes and verify that the destination diskette is a correct copy of the source disk:

> Diskcopy A: A:
> Diskcomp A: A:

2. Use the Microsoft Windows File Manager disk copy utility to copy the diskettes.

APPENDIX A
PAL EQUATIONS FROM A4TEST.ABL

```
MODULE A4TEST

TITLE     'U2
          ARSR-4 PREAMP TEST SET PAL

          DESIGNER:      JIM BEUCHEL  11/14/95
          CHANGES:

          CHECKSUM: '

"Inputs

    CLK              PIN  1;  "1MHZ INPUT CLOCK
    CHARGEN_         PIN  2;
    RESET_           PIN  3;

"Outputs

    !CHGENBL_       PIN 4 = 'neg,reg';
    !PRETRIG_       PIN 5 = 'neg,reg';
    !RFPULSE_       PIN 6 = 'neg,reg';
    !STROBE_        PIN 7 = 'neg,reg';
    COUNT8          PIN 29 = 'pos,reg,buffer';
    COUNT7          PIN 28 = 'pos,reg,buffer';
    COUNT6          PIN 27 = 'pos,reg,buffer';
    COUNT5          PIN 26 = 'pos,reg,buffer';
    COUNT4          PIN 25 = 'pos,reg,buffer';
    COUNT3          PIN 24 = 'pos,reg,buffer';
    COUNT2          PIN 11 = 'pos,reg,buffer';
    COUNT1          PIN 12 = 'pos,reg,buffer';
    COUNT0          PIN 13 = 'pos,reg,buffer';

"Nodes

    CHGIN           NODE 226 = 'pos,reg';
    CHGIND1         NODE 227 = 'pos,reg';
    CHGEDGE         NODE 228 = 'pos,reg';

" NOTE: UNLESS USING ABEL VERSION 4.3
"       DON'T USE NODES 47 - 52, 59, 223 - 228, 235;
"       IN ABEL 3.0 USE OF THESE NODES CAUSES PROBLEMS ON
"       THERE ASSOCIATED OUTPUT PINS.

" UNUSED PINS:  OUTPUT

" UNUSED NODES:

"DEFINITIONS

    X,C,Z,L,H,K = .X.,.C.,.Z.,0,1,.K.;

    COUNT = [COUNT8,COUNT7,COUNT6,COUNT5,COUNT4,COUNT3,COUNT2,COUNT1,COUNT0];

EQUATIONS

    CHGENBL_.CK = CLK;
    CHGENBL_ := !CHARGEN_;
```

SIZE	CAGE CODE	DRAWING NUMBER	
A	18323	DA421405	
SCALE: NONE		REV 01	SHEET 4

```
    CHGIN.CK = CLK;
    CHGIN := !CHARGEN_;

    CHGIND1.CK = CLK;
    CHGIND1 := CHGIN;

    CHGEDGE.CK = CLK;
    CHGEDGE := !(CHGIN # !CHGIND1);

    COUNT.CK = CLK;
    WHEN CHGEDGE # (COUNT > 0) THEN COUNT := (COUNT + 1)
      ELSE COUNT := 0;

    PRETRIG_.CK = CLK;
    PRETRIG_ := (COUNT == 98) # (COUNT == 99);

    RFPULSE_.CK = CLK;
    RFPULSE_ := (COUNT >= 113) & (COUNT <= 262);

    STROBE_.CK = CLK;
    STROBE_ := (COUNT >= 153) & (COUNT <= 192);

TEST_VECTORS

([RESET_,CLK,CHARGEN_] -> [!CHGENBL_,!PRETRIG_,!RFPULSE_,!STROBE_]);

"R C C      C T P S
"S L H      H R U T
"T K G      G I L R
"    -      - G S B
[L,L,H] -> [X,X,X,X];
[H,L,H] -> [H,H,H,H];
[H,C,H] -> [H,H,H,H];
[H,C,H] -> [H,H,H,H];
[H,C,H] -> [H,H,H,H];
[H,C,L] -> [L,H,H,H];
[H,C,L] -> [L,H,H,H];
[H,C,L] -> [L,H,H,H];
[H,C,L] -> [L,H,H,H];
[H,C,L] -> [L,H,H,H];
[H,C,H] -> [H,H,H,H];
@REPEAT 280 {
[H,C,H] -> [X,X,X,X]; }

END;
```

SIZE	CAGE CODE	DRAWING NUMBER	
A	18323	DA421405	
SCALE: NONE		REV 01	SHEET 5

CHAPTER 7

PARTS LISTS AND ILLUSTRATIONS

7.1 INTRODUCTION.- This chapter contains all the parts lists and the remainder of the illustrations for the PAM test set that are not included in chapter 6. Parts lists bound as part of this chapter are listed in table 7-1. Some of these parts lists are for cable assemblies for which the drawings are listed in chapter 6. The illustrations, some of which include the parts lists as part of the drawing, are listed in table 7-2 and are either bound as part of this chapter or are included in separately-bound Appendix C. Illustrations with drawing numbers prefixed with AA are bound as part of the chapter. Illustrations with drawing numbers prefixed with AD are included in Appendix C. The illustrations and parts lists bound in this chapter are grouped together by part number with the parts list following the applicable assembly drawing.

Table 7-1. Separate Parts Lists

Drawing No.	Description	No. of Sheets
PLAD420920	Cable Assembly, 60 Hz Internal Facility Power	3
PLAD420921	Cable Assembly, 60 Hz Console Standby Power	4
PLAD420922	Cable Assembly, Console Interlock	4
PLAD420923	Cable Assembly, Peripheral Interface Panel 60 Hz Power	3
PLAD420924	Panel Assembly, Peripheral Interface Panel	4
PLAD420939	Cable Assembly, Modular Power Supply	5
PLAD420943	Cable Assembly, MPS 60 Hz Power	3
PLAD420946	Cable Assembly, 60 Hz External Facility Power	3
PLAD421401	PAMTS Console Assembly	8
PLAD421402	Control Panel Assembly	9
PLAD421403	RF Test Panel Assembly	12
PLAD421404	Amplifier Panel Assembly	3
PLAD421405	Interface Bd Assy	7
PLAD421410	PAM Fixture Assy	8
PLAA421413	Input Transition Assy	3
PLAA421414	4:1 Combiner Assy	3
PLAD421424	Cable Assy, Preamp	3
PLAD421425	Cable Assy, Lookdown Driver	3
PLAD421426	Class A Amp Bd Assy	7
PLAD421427	Class C Amp Bd Assy	8
PLAD421428	Regulator Bd Assy	16
PLAD421429	Preamp Assy	9
PLAA421430	Computer Assembly	3
PLAD421431	Cable Assembly, LD Low Power	4
PLAD421432	Six-Port Assy	3
PLAA421434	Coaxial Cable Assy	16
PLAA421436	Cable Assembly, Power Supply Output and Control	3
PLAD421437	Cable Assy, D-Sub	7

Table 7-1. Separate Parts Lists--Continued

Drawing No.	Description	No. of Sheets
PLAA421438	Cable Assembly, AC Input Power	3
PLAA421439	Cable Assembly, Control Panel to DMM	3
PLAD421448	Substrate Assy, Six-Port	3
PLAA421645	Phase Reference Assy	4
PLAA421646	4-Way Input Transition Assy	3
PLAA421647	4-Way Output Transition Assy	3
PLAA421785	Adapter Assy, Self Test	3
PLAA421787	Cable Assy, Computer Interfaces, Ribbon	4

Table 7-2. Assembly Drawings and Assembly Drawings with Parts Lists

Drawing No.	Description	No. of Sheets
AD420924	Panel Assembly, Peripheral Interface Panel	1
AD421401	Console Assy, PAMTS	3
AD421402	Control Panel Assembly	3
DD421402	Panel, Control Panel, PAMTS	4
AD421403	RF Test Panel Assembly	3
DD421403	Panel, RF Test	4
AD421404	Amplifier Panel Assembly	1
DD421404	Panel, Amplifier Panel	2
AD421405	Interface Board Assembly	2
AD421410	PAM Fixture Assembly	3
AD421412	Cover, Pwr. Amp. Module Fixture	6
*AA421413	Input Transition Assembly	2
*DA421413	Input Transition Substrate	4
*AA421414	4:1 Combiner	2
*DA421414	4:1 Combiner Substrate	4
AD421426	Circuit Card Assembly, Class A Amp Preamplifier	2

Table 7-2. Assembly Drawings and Assembly Drawings with Parts Lists--Continued

Drawing No.	Description	No. of Sheets
AD421427	Circuit Card Assembly, Class C Amp Preamplifier	4
AD421428	Regulator Preamplifier Assembly	2
AD421429	Preamplifier Assembly	2
*AA421430	Computer Assy	2
AD421432	Six-Port Assembly	1
*AA421448	Six-Port Substrate Assy	4
*DA421448	Six-Port Substrate	4
*AA421645	Phase Reference Assy	2
*DA421645	Phase Reference Substrate	4
*AA421646	4-Way Input Transition Assembly	2
*DA421646	4-Way Input Transition Substrate	4
*AA421647	4-Way Output Transition Assembly	2
*DA421647	4-Way Output Transition Substrate	4
*AA421785	Adapter Assembly, Self Test	3
AD421960	Connector Assembly	1
90C99001	Standard Grounding Cable	2

* These drawings are bound as part of this chapter.

PARTS LIST

DRAFTER	ENGRG	NORTHROP GRUMMAN CORPORATION	CAGE	PARTS LIST NO.	ALL SHEETS
		BALTIMORE, MARYLAND 21203	CODE	PLAD420920	REV: -
RF SPIRES	-		18323		
CHECKED	MFG			SHEET 1	SIZE A
-	-	CONTR NO.		TITLE: CABLE ASSEMBLY, 60 HZ	
		DTFA01-88-C-00037		INTERNAL FACILITY POWER	
DFTG SUPV	MGT				
		CUSTOMER			
-	-			ORIGINAL DATE OF PL 95-04-26	

DEFINED ON THIS PARTS LIST

PART OR IDENTIFYING NO.	NOMENCLATURE OR DESCRIPTION	PART OR IDENTIFYING NO.	NOMENCLATURE OR DESCRIPTION
AD420920G01	CABLE ASSEMBLY, 60 HZ		

APPLICATION			REVISIONS			
NEXT ASSY	USED ON		REV	DESCRIPTION	DATE	APPROVED
AD420901	ARSR4 CATS	PARTS LIST	-	PL RELEASED		
AD421401	ARSR4 CATS	FOR CADO GRAPHIC				
		AD420920 REV -				

G01 QTY REQD	U OF M	CAGE CODE	PART OR IDENTIFYING NO	SYM	NOMENCLATURE OR DESCRIPTION	GOVERNMENT IDENTIFICATION	INTERNAL IDENTIFICATION	FIND NO.
1		96906	MS3454L24-10P		CONNECTOR J1	MS3454		001
1		96906	MS3456L24-10S		CONNECTOR, PLUG P1	MS3456		002
2		81349	M85049/52-1-24W		STRAIN RELIEF	MIL-C-85049/52		003
24	IN		(62122DH08ANYX05)		WIRE,AWG 8 TYPE W 8/5	J-C-580		004

NOTE 1: PARENTHETIC IDENTITIES ARE FOR REFERENCE, EXCEPT THAT THEY MAY BE USED BY NORTHROP GRUMMAN OR ITS SUBCONTRACTORS IN LIEU OF OTHER IDENTITIES SHOWN.

UNLESS OTHERWISE DOCUMENTED, THE SUPERSEDURE PARTS LIST, 97942-578R500, IS THE AUTHORITY FOR SUPERSEDURES, UNLESS OTHERWISE SPECIFIED ON CONTRACT, PROCUREMENT ORDER OR PROGRAM DIRECTIVE.

IDENTIFY PARTS DEFINED ON THIS PARTS LIST PER MIL-STD-130, UNLESS OTHERWISE SPECIFIED ON CONTRACT OR PROCUREMENT ORDER.

PART OR IDENTIFYING NUMBERS CREATED FROM INTERNAL MATERIAL OR PROCESS SPECIFICATIONS MAY BE STRUCTURED ACCORDING TO 97942-581R515.

U OF M = UNIT OF MEASURE

```
***     END OF PARTS LIST AD420920          ***
***     TOTAL NUMBER OF SHEETS =  3         ***
*** RUN DATE: 07/15/97   RUN TIME: 10:34:57  ***
```

PARTS LIST

DRAFTER	ENGRG	NORTHROP GRUMMAN CORPORATION	CAGE CODE	PARTS LIST NO.	ALL SHEETS
RF SPIRES		BALTIMORE, MARYLAND 21203	18323	PLAD420921	REV: -
CHECKED	MFG			SHEET 1	SIZE A
DFTG SUPV	MGT	CONTR NO. DTFA01-88-C-00037	TITLE: CABLE ASSEMBLY, 60 HZ CONSOLE STANDBY POWER		
		CUSTOMER	ORIGINAL DATE OF PL 95-04-26		

DEFINED ON THIS PARTS LIST

PART OR IDENTIFYING NO.	NOMENCLATURE OR DESCRIPTION	PART OR IDENTIFYING NO.	NOMENCLATURE OR DESCRIPTION
AD420921G01	CABLE ASSEMBLY, 60 HZ		
AD420921G02	CABLE ASSEMBLY, 60 HZ		

APPLICATION

NEXT ASSY	USED ON
AD420901	ARSR4 CATS
KA420900	ARSR4 CATS
KA421400	ARSR4 CATS

PARTS LIST
FOR CADO GRAPHIC
AD420921 REV -

REVISIONS

REV	DESCRIPTION	DATE	APPROVED
-	PL RELEASED		

G01 QTY REQD	U OF M	CAGE CODE	PART OR IDENTIFYING NO	SYM	NOMENCLATURE OR DESCRIPTION	GOVERNMENT IDENTIFICATION	INTERNAL IDENTIFICATION	FIND NO.
1		96906	MS3456W16-10P		CIRCULAR PLUG MIL-C-5015 CONNECTORS P1	MS3456		001
1		81349	M85049/52-1-16W		STRAIN RELIEF	MIL-C-85049/52		002
1		0MG77	PER7		PERSONAL SURGE ARREST			003

* FIND NO. 004 - 005 NOT REQUIRED IN THIS GROUP *

LAST SHEET OF G01

G02 QTY REQD	U OF M	CAGE CODE	PART OR IDENTIFYING NO	SYM	NOMENCLATURE OR DESCRIPTION	GOVERNMENT IDENTIFICATION	INTERNAL IDENTIFICATION	FIND NO.
					* FIND NO. 001 - 002 NOT REQUIRED IN THIS GROUP *			
1		0MG77	PER7		PERSONAL SURGE ARREST			003
1		09922	G6F10-4PNH		CONNECTOR, CIRC, STRAIGHT PLUG P1			004
4		09922	RM16M-23D28		CONTACT,PIN			005

LAST SHEET OF G02

NOTE 1: PARENTHETIC IDENTITIES ARE FOR REFERENCE, EXCEPT THAT THEY MAY BE USED BY NORTHROP GRUMMAN OR ITS SUBCONTRACTORS IN LIEU OF OTHER IDENTITIES SHOWN.

UNLESS OTHERWISE DOCUMENTED, THE SUPERSEDURE PARTS LIST, 97942-578R500, IS THE AUTHORITY FOR SUPERSEDURES, UNLESS OTHERWISE SPECIFIED ON CONTRACT, PROCUREMENT ORDER OR PROGRAM DIRECTIVE.

IDENTIFY PARTS DEFINED ON THIS PARTS LIST PER MIL-STD-130, UNLESS OTHERWISE SPECIFIED ON CONTRACT OR PROCUREMENT ORDER.

PART OR IDENTIFYING NUMBERS CREATED FROM INTERNAL MATERIAL OR PROCESS SPECIFICATIONS MAY BE STRUCTURED ACCORDING TO 97942-581R515.

U OF M = UNIT OF MEASURE

```
***     END OF PARTS LIST AD420921            ***
***     TOTAL NUMBER OF SHEETS =  4           ***
*** RUN DATE: 07/15/97   RUN TIME: 09:05:08   ***
```

PARTS LIST

DRAFTER	ENGRG	NORTHROP GRUMMAN CORPORATION BALTIMORE, MARYLAND 21203	CAGE CODE 18323	PARTS LIST NO. PLAD420922 / ALL SHEETS REV: -
CHECKED	MFG			SHEET 1 / SIZE A
DFTG SUPV	MGT	CONTR NO. DTFA01-88-C-00037 CUSTOMER	TITLE: CABLE ASSEMBLY, CONSOLE INTERLOCK	
			ORIGINAL DATE OF PL 95-05-08	

DEFINED ON THIS PARTS LIST

PART OR IDENTIFYING NO.	NOMENCLATURE OR DESCRIPTION	PART OR IDENTIFYING NO.	NOMENCLATURE OR DESCRIPTION
AD420922G01	CABLE ASSEMBLY, CONSOLE		
AD420922G02	CABLE ASSEMBLY, CONSOLE		

APPLICATION			REVISIONS			
NEXT ASSY	USED ON		REV	DESCRIPTION	DATE	APPROVED
AD420901	ARSR4 CATS	PARTS LIST	-	PL RELEASED		
AD421401	ARSR4 CATS	FOR CADO GRAPHIC				
		AD420922 REV -				

G01 QTY REQD	U OF M	CAGE CODE	PART OR IDENTIFYING NO	SYM	NOMENCLATURE OR DESCRIPTION	GOVERNMENT IDENTIFICATION	INTERNAL IDENTIFICATION	FIND NO.
1		09922	MS14PM824		CONNECTOR P1			001
4		09922	RM16M-23D28		CONTACT,PIN			002
8		96906	MS25036-101		TERMINAL, LUG	MS25036		003
REF			6589A14		PFD,WIRE CABLE & WIRING DVCS		6589A14	004

LAST SHEET OF G01

G02 QTY REQD	U OF M	CAGE CODE	PART OR IDENTIFYING NO	SYM	NOMENCLATURE OR DESCRIPTION	GOVERNMENT IDENTIFICATION	INTERNAL IDENTIFICATION	FIND NO.
1		09922	MS14PM824		CONNECTOR P1			001
4		09922	RM16M-23D28		CONTACT,PIN			002
6		96906	MS25036-101		TERMINAL, LUG	MS25036		003
REF			6589A14		PFD,WIRE CABLE & WIRING DVCS		6589A14	004

LAST SHEET OF G02

NOTE 1: PARENTHETIC IDENTITIES ARE FOR REFERENCE, EXCEPT THAT THEY MAY BE USED BY NORTHROP GRUMMAN OR ITS SUBCONTRACTORS IN LIEU OF OTHER IDENTITIES SHOWN.

UNLESS OTHERWISE DOCUMENTED, THE SUPERSEDURE PARTS LIST, 97942-578R500, IS THE AUTHORITY FOR SUPERSEDURES, UNLESS OTHERWISE SPECIFIED ON CONTRACT, PROCUREMENT ORDER OR PROGRAM DIRECTIVE.

IDENTIFY PARTS DEFINED ON THIS PARTS LIST PER MIL-STD-130, UNLESS OTHERWISE SPECIFIED ON CONTRACT OR PROCUREMENT ORDER.

PART OR IDENTIFYING NUMBERS CREATED FROM INTERNAL MATERIAL OR PROCESS SPECIFICATIONS MAY BE STRUCTURED ACCORDING TO 97942-581R515.

U OF M = UNIT OF MEASURE

```
***     END OF PARTS LIST AD420922            ***
***     TOTAL NUMBER OF SHEETS =  4           ***
*** RUN DATE: 07/15/97   RUN TIME: 09:09:23    ***
```

PARTS LIST

DRAFTER	ENGRG	NORTHROP GRUMMAN CORPORATION BALTIMORE, MARYLAND 21203	CAGE CODE 18323	PARTS LIST NO. PLAD420923 / ALL SHEETS REV: -
CHECKED	MFG			SHEET 1 / SIZE A
DFTG SUPV	MGT	CONTR NO. DTFA01-88-C-00037 CUSTOMER	TITLE: CABLE ASSEMBLY, PERIPHERAL INTERFACE PANEL 60 HZ POWER	
			ORIGINAL DATE OF PL 95-05-08	

DEFINED ON THIS PARTS LIST

PART OR IDENTIFYING NO.	NOMENCLATURE OR DESCRIPTION	PART OR IDENTIFYING NO.	NOMENCLATURE OR DESCRIPTION
AD420923G01	CABLE ASSEMBLY, 60 HZ		

APPLICATION			REVISIONS			
NEXT ASSY	USED ON		REV	DESCRIPTION	DATE	APPROVED
AD420901	ARSR4 CATS	PARTS LIST FOR CADO GRAPHIC AD420923 REV -	-	PL RELEASED		

G01 QTY REQD	U OF M	CAGE CODE	PART OR IDENTIFYING NO	SYM	NOMENCLATURE OR DESCRIPTION	GOVERNMENT IDENTIFICATION	INTERNAL IDENTIFICATION	FIND NO.
1			17614		EXTENSION CORD			001
1		09922	G0F10-4SNH		CONNECTOR, SOCKET J1			002
4		09922	RC16M-23D28		CONTACT,SOCKET			003

NOTE 1: PARENTHETIC IDENTITIES ARE FOR REFERENCE, EXCEPT THAT THEY MAY BE USED BY NORTHROP GRUMMAN OR ITS SUBCONTRACTORS IN LIEU OF OTHER IDENTITIES SHOWN.

UNLESS OTHERWISE DOCUMENTED, THE SUPERSEDURE PARTS LIST, 97942-578R500, IS THE AUTHORITY FOR SUPERSEDURES, UNLESS OTHERWISE SPECIFIED ON CONTRACT, PROCUREMENT ORDER OR PROGRAM DIRECTIVE.

IDENTIFY PARTS DEFINED ON THIS PARTS LIST PER MIL-STD-130, UNLESS OTHERWISE SPECIFIED ON CONTRACT OR PROCUREMENT ORDER.

PART OR IDENTIFYING NUMBERS CREATED FROM INTERNAL MATERIAL OR PROCESS SPECIFICATIONS MAY BE STRUCTURED ACCORDING TO 97942-581R515.

U OF M = UNIT OF MEASURE

*** END OF PARTS LIST AD420923 ***
*** TOTAL NUMBER OF SHEETS = 3 ***
*** RUN DATE: 07/15/97 RUN TIME: 09:09:23 ***

PARTS LIST

DRAFTER	ENGRG	NORTHROP GRUMMAN CORPORATION BALTIMORE, MARYLAND 21203	CAGE CODE 18323	PARTS LIST NO. PLAD420924 / ALL SHEETS REV: -
CHECKED	MFG			SHEET 1 / SIZE A
DFTG SUPV	MGT	CONTR NO. DTFA01-88-C-00037 CUSTOMER	TITLE: PANEL ASSEMBLY PERIPHERAL INTERFACE PANEL	
			ORIGINAL DATE OF PL 95-04-27	

DEFINED ON THIS PARTS LIST

PART OR IDENTIFYING NO.	NOMENCLATURE OR DESCRIPTION	PART OR IDENTIFYING NO.	NOMENCLATURE OR DESCRIPTION
AD420924G01	PANEL ASSEMBLY, PERIPHERAL		
AD420924G02	PANEL ASSEMBLY PERIPHERAL		

APPLICATION			REVISIONS			
NEXT ASSY	USED ON		REV	DESCRIPTION	DATE	APPROVED
AD420901	ARSR4 CATS	PARTS LIST FOR CADO GRAPHIC AD420924 REV -	-	PL RELEASED		
AD421401	ARSR4 CATS					

G01 QTY REQD	U OF M	CAGE CODE	PART OR IDENTIFYING NO	SYM	NOMENCLATURE OR DESCRIPTION	GOVERNMENT IDENTIFICATION	INTERNAL IDENTIFICATION	FIND NO.
1			DD420924H01		PANEL, PERIPHERAL INTERFACE			001
1		43321	CIB24BF		FEEDTHRU IEEE-488 (CONNECTOR ADAPTER) J2			002
REF			954A146		PFD FASTENER HDW DWG		954A146	003

* FIND NO. 004 NOT REQUIRED IN THIS GROUP *

LAST SHEET OF G01

G02 QTY REQD	U OF M	CAGE CODE	PART OR IDENTIFYING NO	SYM	NOMENCLATURE OR DESCRIPTION	GOVERNMENT IDENTIFICATION	INTERNAL IDENTIFICATION	FIND NO.
					* FIND NO. 001 NOT REQUIRED IN THIS GROUP *			
1		43321	CIB24BF		FEEDTHRU IEEE-488 (CONNECTOR ADAPTER) J2			002
REF			954A146		PFD FASTENER HDW DWG		954A146	003
1			DD420924H02		PANEL, PERIPHERAL INTERFACE			004
					LAST SHEET OF G02			

NOTE 1: PARENTHETIC IDENTITIES ARE FOR REFERENCE, EXCEPT THAT THEY MAY BE USED BY NORTHROP GRUMMAN OR ITS SUBCONTRACTORS IN LIEU OF OTHER IDENTITIES SHOWN.

UNLESS OTHERWISE DOCUMENTED, THE SUPERSEDURE PARTS LIST, 97942-578R500, IS THE AUTHORITY FOR SUPERSEDURES, UNLESS OTHERWISE SPECIFIED ON CONTRACT, PROCUREMENT ORDER OR PROGRAM DIRECTIVE.

IDENTIFY PARTS DEFINED ON THIS PARTS LIST PER MIL-STD-130, UNLESS OTHERWISE SPECIFIED ON CONTRACT OR PROCUREMENT ORDER.

PART OR IDENTIFYING NUMBERS CREATED FROM INTERNAL MATERIAL OR PROCESS SPECIFICATIONS MAY BE STRUCTURED ACCORDING TO 97942-581R515.

U OF M = UNIT OF MEASURE

```
***     END OF PARTS LIST AD420924            ***
***     TOTAL NUMBER OF SHEETS =  4           ***
*** RUN DATE: 07/25/97   RUN TIME: 13:26:56   ***
```

PARTS LIST

DRAFTER	ENGRG	NORTHROP GRUMMAN CORPORATION BALTIMORE, MARYLAND 21203	CAGE CODE 18323	PARTS LIST NO. PLAD420939
				ALL SHEETS REV: -
CHECKED	MFG			SHEET 1
				SIZE A
		CONTR NO. DTFA01-88-C-00037	TITLE: CABLE ASSEMBLY, MODULAR POWER SUPPLY	
DFTG SUPV	MGT			
		CUSTOMER		
			ORIGINAL DATE OF PL 95-05-04	

DEFINED ON THIS PARTS LIST

PART OR IDENTIFYING NO.	NOMENCLATURE OR DESCRIPTION	PART OR IDENTIFYING NO.	NOMENCLATURE OR DESCRIPTION
AD420939G01	CABLE ASSEMBLY, MODULAR		
AD420939G02	CABLE ASSEMBLY, MODULAR		
AD420939G03	CABLE ASSEMBLY, MODULAR		

APPLICATION

NEXT ASSY	USED ON
AD420901	ARSR4 CATS
AD421401	ARSR4 CATS

PARTS LIST
FOR CADO GRAPHIC
AD420939 REV -

REVISIONS

REV	DESCRIPTION	DATE	APPROVED
-	PL RELEASED		

G01 QTY REQD	U OF M	CAGE CODE	PART OR IDENTIFYING NO	SYM	NOMENCLATURE OR DESCRIPTION	GOVERNMENT IDENTIFICATION	INTERNAL IDENTIFICATION	FIND NO.
1		09922	MS34PM-824		CONNECTOR P1			001
16		09922	RC16M-23D28		CONTACT,SOCKET			002
18		09922	RC20M-12D28		CONTACT,SOCKET			003
5		28480	5060-3386		CONNECTOR, DC MODULE SEE NOTE 2 P2-P6			004
1		28480	1252-1488		CONNECTOR, TERMINAL BLOCK SEE NOTE 3 P7			005
REF			6589A14		PFD,WIRE CABLE & WIRING DVCS		6589A14	006
REF			SD420939		SCHEM,MPS CABLE ASSY LAST SHEET OF G01			007

G02 QTY REQD	U OF M	CAGE CODE	PART OR IDENTIFYING NO	SYM	NOMENCLATURE OR DESCRIPTION	GOVERNMENT IDENTIFICATION	INTERNAL IDENTIFICATION	FIND NO.
1		09922	MS34PM-824		CONNECTOR P1			001
16		09922	RC16M-23D28		CONTACT,SOCKET			002
18		09922	RC20M-12D28		CONTACT,SOCKET			003
4		28480	5060-3386		CONNECTOR, DC MODULE SEE NOTE 2 P2-P5			004
1		28480	1252-1488		CONNECTOR, TERMINAL BLOCK SEE NOTE 3 P7			005
REF			6589A14		PFD,WIRE CABLE & WIRING DVCS		6589A14	006
REF			SD420939		SCHEM,MPS CABLE ASSY LAST SHEET OF G02			007

G03 QTY REQD	U OF M	CAGE CODE	PART OR IDENTIFYING NO	SYM	NOMENCLATURE OR DESCRIPTION	GOVERNMENT IDENTIFICATION	INTERNAL IDENTIFICATION	FIND NO.
1		09922	MS34PM-824		CONNECTOR P1			001
16		09922	RC16M-23D28		CONTACT,SOCKET			002
18		09922	RC20M-12D28		CONTACT,SOCKET			003
5		28480	5060-3386		CONNECTOR, DC MODULE SEE NOTE 2 P2-P6			004
1		28480	1252-1488		CONNECTOR, TERMINAL BLOCK SEE NOTE 3 P7			005
REF			6589A14		PFD,WIRE CABLE & WIRING DVCS		6589A14	006
REF			SD420939		SCHEM,MPS CABLE ASSY LAST SHEET OF G03			007

NOTE 1: PARENTHETIC IDENTITIES ARE FOR REFERENCE, EXCEPT THAT THEY MAY BE USED BY NORTHROP GRUMMAN OR ITS SUBCONTRACTORS IN LIEU OF OTHER IDENTITIES SHOWN.

UNLESS OTHERWISE DOCUMENTED, THE SUPERSEDURE PARTS LIST, 97942-578R500, IS THE AUTHORITY FOR SUPERSEDURES, UNLESS OTHERWISE SPECIFIED ON CONTRACT, PROCUREMENT ORDER OR PROGRAM DIRECTIVE.

IDENTIFY PARTS DEFINED ON THIS PARTS LIST PER MIL-STD-130, UNLESS OTHERWISE SPECIFIED ON CONTRACT OR PROCUREMENT ORDER.

PART OR IDENTIFYING NUMBERS CREATED FROM INTERNAL MATERIAL OR PROCESS SPECIFICATIONS MAY BE STRUCTURED ACCORDING TO 97942-581R515.

U OF M = UNIT OF MEASURE

NOTE 2: FOR FIND NO 004: ITEMS SUPPLIED WITH THE HP-66000A MODULAR POWER SUPPLY MAINFRAME.

NOTE 3: FOR FIND NO 005: ITEM SUPPLIED WITH THE HP-66000A MODULAR POWER SUPPLY MAINFRAME.

*** END OF PARTS LIST AD420939 ***

*** TOTAL NUMBER OF SHEETS = 5 ***

*** RUN DATE: 09/08/97 RUN TIME: 16:06:24 ***

PARTS LIST

DRAFTER	ENGRG	NORTHROP GRUMMAN CORPORATION BALTIMORE, MARYLAND 21203	CAGE CODE 18323	PARTS LIST NO. PLAD420943	ALL SHEETS REV: -
CHECKED	MFG			SHEET 1	SIZE A
DFTG SUPV	MGT	CONTR NO. DTFA01-88-C-00037 CUSTOMER	TITLE: CABLE ASSEMBLY, MPS 60 HZ POWER		
			ORIGINAL DATE OF PL 95-05-09		

DEFINED ON THIS PARTS LIST

PART OR IDENTIFYING NO.	NOMENCLATURE OR DESCRIPTION	PART OR IDENTIFYING NO.	NOMENCLATURE OR DESCRIPTION
AD420943G01	CABLE ASSEMBLY, MPS 60 HZ		

APPLICATION			REVISIONS			
NEXT ASSY	USED ON		REV	DESCRIPTION	DATE	APPROVED
AD420901	ARSR4 CATS	PARTS LIST FOR CADO GRAPHIC AD420943 REV -	-	PL RELEASED		
AD421401	ARSR4 CATS					

G01 QTY REQD	U OF M	CAGE CODE	PART OR IDENTIFYING NO	SYM	NOMENCLATURE OR DESCRIPTION	GOVERNMENT IDENTIFICATION	INTERNAL IDENTIFICATION	FIND NO.
1		71183	5266N		CONNECTOR P1			001
1		28480	8120-5566		LINE CORD SEE NOTE 2			002
1		28480	5040-1676		SAFETY COVER SEE NOTE 3			003

NOTE 1: PARENTHETIC IDENTITIES ARE FOR REFERENCE, EXCEPT THAT THEY MAY BE USED BY NORTHROP GRUMMAN OR ITS SUBCONTRACTORS IN LIEU OF OTHER IDENTITIES SHOWN.

UNLESS OTHERWISE DOCUMENTED, THE SUPERSEDURE PARTS LIST, 97942-578R500, IS THE AUTHORITY FOR SUPERSEDURES, UNLESS OTHERWISE SPECIFIED ON CONTRACT, PROCUREMENT ORDER OR PROGRAM DIRECTIVE.

IDENTIFY PARTS DEFINED ON THIS PARTS LIST PER MIL-STD-130, UNLESS OTHERWISE SPECIFIED ON CONTRACT OR PROCUREMENT ORDER.

PART OR IDENTIFYING NUMBERS CREATED FROM INTERNAL MATERIAL OR PROCESS SPECIFICATIONS MAY BE STRUCTURED ACCORDING TO 97942-581R515.

U OF M = UNIT OF MEASURE

NOTE 2: FOR FIND NO 002: ITEM SUPPLIED WITH THE HP-66000A MODULAR POWER SUPPLY MAINFRAME
NOTE 3: FOR FIND NO 003: ITEM SUPPLIED WITH THE HP-66000A MODULAR POWER SUPPLY MAINFRAME

*** END OF PARTS LIST AD420943 ***
*** TOTAL NUMBER OF SHEETS = 3 ***
*** RUN DATE: 08/27/97 RUN TIME: 14:01:17 ***

PARTS LIST

DRAFTER	ENGRG	NORTHROP GRUMMAN CORPORATION BALTIMORE, MARYLAND 21203	CAGE CODE 18323	PARTS LIST NO. PLAD420946 / ALL SHEETS REV: -
CHECKED	MFG			SHEET 1 / SIZE A
DFTG SUPV	MGT	CONTR NO. DTFA01-88-C-00037 CUSTOMER	TITLE: CABLE ASSEMBLY, 60 HZ EXTERNAL FACILITY POWER	
			ORIGINAL DATE OF PL 95-05-08	

DEFINED ON THIS PARTS LIST

PART OR IDENTIFYING NO.	NOMENCLATURE OR DESCRIPTION	PART OR IDENTIFYING NO.	NOMENCLATURE OR DESCRIPTION
AD420946G01	CABLE ASSEMBLY, 60 HZ		

APPLICATION

NEXT ASSY	USED ON
KA420900	ARSR4 CATS
KA421400	ARSR4 CATS

PARTS LIST
FOR CADO GRAPHIC
AD420946 REV -

REVISIONS

REV	DESCRIPTION	DATE	APPROVED
-	PL RELEASED		

G01 QTY REQD	U OF M	CAGE CODE	PART OR IDENTIFYING NO	SYM	NOMENCLATURE OR DESCRIPTION	GOVERNMENT IDENTIFICATION	INTERNAL IDENTIFICATION	FIND NO.
1		96906	MS3456L24-10S		CONNECTOR, PLUG P1	MS3456		001
1		81349	M85049/52-1-24W		STRAIN RELIEF	MIL-C-85049/52		002
240	IN		(62122DH08ANYX05)		WIRE,AWG 8 TYPE W 8/5	J-C-580		003

NOTE 1: PARENTHETIC IDENTITIES ARE FOR REFERENCE, EXCEPT THAT THEY MAY BE USED BY NORTHROP GRUMMAN OR ITS SUBCONTRACTORS IN LIEU OF OTHER IDENTITIES SHOWN.

UNLESS OTHERWISE DOCUMENTED, THE SUPERSEDURE PARTS LIST, 97942-578R500, IS THE AUTHORITY FOR SUPERSEDURES, UNLESS OTHERWISE SPECIFIED ON CONTRACT, PROCUREMENT ORDER OR PROGRAM DIRECTIVE.

IDENTIFY PARTS DEFINED ON THIS PARTS LIST PER MIL-STD-130, UNLESS OTHERWISE SPECIFIED ON CONTRACT OR PROCUREMENT ORDER.

PART OR IDENTIFYING NUMBERS CREATED FROM INTERNAL MATERIAL OR PROCESS SPECIFICATIONS MAY BE STRUCTURED ACCORDING TO 97942-581R515.

U OF M = UNIT OF MEASURE

```
***     END OF PARTS LIST AD420946          ***
***     TOTAL NUMBER OF SHEETS =  3         ***
*** RUN DATE: 08/27/97   RUN TIME: 14:01:42  ***
```

*** DRAFTING PARTS LIST ONLY *** NOT FOR RELEASE ***

DRAFTER	ENGRG	NORTHROP GRUMMAN CORPORATION BALTIMORE, MARYLAND 21203	CAGE CODE 18323	PARTS LIST NO. PLAD421401	ALL SHEETS REV: 01
CHECKED	MFG			SHEET 1	SIZE A
DFTG SUPV	MGT	CONTR NO. DTFA01-88-C-00037 CUSTOMER	TITLE: PAMTS CONSOLE ASSY		
			ORIGINAL DATE OF PL 96-05-02		

DEFINED ON THIS PARTS LIST

PART OR IDENTIFYING NO.	NOMENCLATURE OR DESCRIPTION	PART OR IDENTIFYING NO.	NOMENCLATURE OR DESCRIPTION
AD421401G01	CONSOLE ASSY, PAM TEST SET		

APPLICATION		REVISIONS			
NEXT ASSY	USED ON	REV	DESCRIPTION	DATE	APPROVED
KA421400	ARSR4 CATS				

PARTS LIST
FOR CADO GRAPHIC
AD421401 REV

G01 QTY REQD	U OF M	CAGE CODE	PART OR IDENTIFYING NO	SYM	NOMENCLATURE OR DESCRIPTION	GOVERNMENT IDENTIFICATION	INTERNAL IDENTIFICATION	FIND NO.
1			AD421402G01		CONTROL PANEL ASSY			001
1			AD421403G01		RF TEST PANEL ASSY			002
1			AD421404G01		AMPLIFIER PANEL ASSY			003
1			AD420924G01		PANEL ASSEMBLY, PERIPHERAL INTERFACE PANEL			004
1			AD421432G01		SIX-PORT REFLECTOMETER ASSY			005
1			AD421642G01		PLENUM,AIR			006
1			DD421644H02		COVER, PLENUM			007
1			AD421643G01		PLENUM, UUT BLOWER			008
1			DD421648H01		MOUNT, UUT			009
1			DD419972H01		CONNECTOR, BULKHEAD, POWER INPUT			010
4			990C994G02		CHASSIS GUIDE			011

G01 QTY REQD	U OF M	CAGE CODE	PART OR IDENTIFYING NO	SYM	NOMENCLATURE OR DESCRIPTION	GOVERNMENT IDENTIFICATION	INTERNAL IDENTIFICATION	FIND NO.
1			AD421649G01		ATTACHMENT, UUT			012
1			DD419968H04		PANEL, BLANK			013
1			DD419968H05		PANEL, BLANK			014
1			DD419968H06		PANEL, BLANK			015
2			DD419968H07		PANEL, BLANK			016
1			DD421781H01		BRACKET, PRESSURE SWITCH			017
1			DD419972H01		CONNECTOR, BULKHEAD, POWER INPUT			018
1			DD421782H01		BRACKET, PANEL MOUNT			019
1			DD421782H02		BRACKET, PANEL MOUNT			020
1			DD421783H01		PANEL, COVER			021
1			DD421784H01		BRACKET, METER MOUNT			022
2			DD419349H01		BRACKET, INTERLOCK SWITCH			023

G01 QTY REQD	U OF M	CAGE CODE	PART OR IDENTIFYING NO	SYM	NOMENCLATURE OR DESCRIPTION	GOVERNMENT IDENTIFICATION	INTERNAL IDENTIFICATION	FIND NO.
1			4581C85H01		NAMEPLATE			024
1			976B778H01		LABEL			025
				*	FIND NO. 026 - 029 NEVER USED *			
REF			SD421401		INTERNAL INTERCONNECTION DIAGRAM			030
REF			954A146		FASTENER STANDARDS			031
REF			6589A14		PREFERRED WIRE CABLE			032
REF			6583A47		STD SAFETY LABELS - MKG			033
				*	FIND NO. 034 - 039 NEVER USED *			
1			AD420920G01		CABLE ASSEMBLY, 60 HZ INTERNAL FACILITY POWER			040
1			AD420943G01		CABLE ASSEMBLY, MPS 60 HZ POWER			041
1			AD420939G03		CABLE ASSEMBLY, MODULAR POWER SUPPLY			042

G01 QTY REQD	U OF M	CAGE CODE	PART OR IDENTIFYING NO	SYM	NOMENCLATURE OR DESCRIPTION	GOVERNMENT IDENTIFICATION	INTERNAL IDENTIFICATION	FIND NO.
1			AD420922G02		CABLE ASSEMBLY, CONSOLE INTERLOCK			043
				*	FIND NO. 044 - 100 NEVER USED *			
2		58602	WAG-EVSW1-95		LABEL-DANGER			101
1		98587	S-28787		CONSOLE			102
1		81349	PC846		POWER CONTROL PNL, 60HZ	MIL-C-14409		103
4		96906	MS27130CR25K		NUT,BLIND RIVET .190-32	MS27130		104
1		55318	APD1047		LABEL, HEAVY UNIT			105
				*	FIND NO. 106 - 144 NEVER USED *			
2		0CS94	KF03-02PS		FITTG.1/8 PIPE-3/16			145
1		85274	1823-1		SWITCH,PRESSURE			146
4		09922	RM16M-23D28		CONTACT,PIN			147
1		09922	G6F10-4PNH		CONNECTOR, CIRC, STRAIGHT PLUG			148

G01 QTY REQD	U OF M	CAGE CODE	PART OR IDENTIFYING NO	SYM	NOMENCLATURE OR DESCRIPTION	GOVERNMENT IDENTIFICATION	INTERNAL IDENTIFICATION	FIND NO.
1		07321	4C442		BLOWER, 115VAC 50/50 HZ (DAYTON)			149
1		28480	HP8560EOPT909		SPECTRUM ANALYZER			150
1		28480	HP66000AOPT834,909		MODULAR POWER SUPPLY MAINFRAME			151
3		28480	HP66103A		DC POWER MODULE, 35V			152
1		28480	HP66104A		DC POWER MODULE, 60V			153
1		61987	I62B-5040		POWER SUPPLY, 50V 40A			154
1		09553	52024-001SOPT5		SIGNAL GENERATOR			155
1		09553	46884-792D		RACK MOUNT, SIGNAL GENERATOR			156
1		0TDC4	PM3380A/403		OSCILLOSCOPE			157
1		0TDC4	PM8960/041		RACK MOUNT, OSCILLOSCOPE			158
1		80164	2001(KEITHLEY)		MULTIMETER			159

G01 QTY REQD	U OF M	CAGE CODE	PART OR IDENTIFYING NO	SYM	NOMENCLATURE OR DESCRIPTION	GOVERNMENT IDENTIFICATION	INTERNAL IDENTIFICATION	FIND NO.
1		80164	2000-SCAN		SCANNER CARD			160
1		80164	4288-1		RACK MOUNT			161
3		58900	GT8542BOPT01		PEAK POWER METER			162
2		58900	GT80350A		PEAK POWER SENSOR			163
4		58900	GT80401A		POWER SENSOR, MODULATION			164

NOTE 1: PARENTHETIC IDENTITIES ARE FOR REFERENCE, EXCEPT THAT THEY MAY BE USED BY NORTHROP GRUMMAN OR ITS SUBCONTRACTORS IN LIEU OF OTHER IDENTITIES SHOWN.

UNLESS OTHERWISE DOCUMENTED, THE SUPERSEDURE PARTS LIST, 97942-578R500, IS THE AUTHORITY FOR SUPERSEDURES, UNLESS OTHERWISE SPECIFIED ON CONTRACT, PROCUREMENT ORDER OR PROGRAM DIRECTIVE.

IDENTIFY PARTS DEFINED ON THIS PARTS LIST PER MIL-STD-130, UNLESS OTHERWISE SPECIFIED ON CONTRACT OR PROCUREMENT ORDER.

PART OR IDENTIFYING NUMBERS CREATED FROM INTERNAL MATERIAL OR PROCESS SPECIFICATIONS MAY BE STRUCTURED ACCORDING TO 97942-581R515.

U OF M = UNIT OF MEASURE

```
***     END OF PARTS LIST AD421401            ***
***     TOTAL NUMBER OF SHEETS =  8           ***
*** RUN DATE: 12/03/96   RUN TIME: 14:37:57   ***
```

*** DRAFTING PARTS LIST ONLY *** NOT FOR RELEASE ***

DRAFTER	ENGRG	NORTHROP GRUMMAN CORPORATION BALTIMORE, MARYLAND 21203	CAGE CODE 18323	PARTS LIST NO. PLAD421402	ALL SHEETS REV: 01
CHECKED	MFG			SHEET 1	SIZE A
DFTG SUPV	MGT	CONTR NO. DTFA01-88-C-00037 CUSTOMER	TITLE: CONTROL PANEL ASSEMBLY ORIGINAL DATE OF PL 96-04-30		

DEFINED ON THIS PARTS LIST

PART OR IDENTIFYING NO.	NOMENCLATURE OR DESCRIPTION	PART OR IDENTIFYING NO.	NOMENCLATURE OR DESCRIPTION
AD421402G01	CONTROL PANEL ASSY		

APPLICATION		REVISIONS			
NEXT ASSY	USED ON	REV	DESCRIPTION	DATE	APPROVED
AD421401	LLRF T/S				

PARTS LIST
FOR CADO GRAPHIC
AD421402 REV

G01 QTY REQD	U OF M	CAGE CODE	PART OR IDENTIFYING NO	SYM	NOMENCLATURE OR DESCRIPTION	GOVERNMENT IDENTIFICATION	INTERNAL IDENTIFICATION	FIND NO.
1			DD421402H01		PANEL, CONTROL PANEL			001
1			DD421406H01		CHASSIS, CONTROL PANEL			002
1			DD421637H01		COVER			003
REF			SD421402		SCHEMATIC, CONTROL PANEL			004
REF			954A146		FASTENER STANDARDS			005
REF			6589A14		PREFERRED WIRE CABLE			006
				*	FIND NO. 007 - 008 NEVER USED *			
2		09353	7411TZQE		SWITCH, 4PDT TOGGLE S1-S2			009
1		81349	M55155/26XC02		TERMINAL,STUD E1	MIL-T-55155/26		010
1		71785	2-151		TERMINAL BLOCK, 2 POS 50A TB1			011
1		71785	2-140		TERMINAL BLOCK, 2 POS 15A TB2			012

G01 QTY REQD	U OF M	CAGE CODE	PART OR IDENTIFYING NO	SYM	NOMENCLATURE OR DESCRIPTION	GOVERNMENT IDENTIFICATION	INTERNAL IDENTIFICATION	FIND NO.
1		91506	M6053-2		SWITCH ASSY, MUSHROOM HEAD, PUSH-PULL S3			013
1		91506	F40		CONTACT BLOCK, QUICK CONNECT			014
1		50541	LEMY15-0088		CONNECTOR, HYPERTRONICS J1			015
1		09922	MS34RM-58		CONNECTOR,34 PIN J100			016
2		81349	M24308/4-3		CONNECTOR J101	MIL-C-24308/4		017
1		81349	M24308/2-4		CONNECTOR J102	MIL-C-24308/2		018
1		81349	M24308/2-3		CONNECTOR J103	MIL-C-24308/2		019
1		71468	DDM24W7SA197		CONNECTOR, COMBO D SUB J104			020

G01 QTY REQD	U OF M	CAGE CODE	PART OR IDENTIFYING NO	SYM	NOMENCLATURE OR DESCRIPTION	GOVERNMENT IDENTIFICATION	INTERNAL IDENTIFICATION	FIND NO.
1		81349	M24308/4-14		CONNECTOR J105	MIL-C-24308/4		021
		00779	204519-2	ALT				
1		09922	G3B18-22SNH		CONNECTOR, CIRC, JAMNUT RECEPT J106			022
1		61935	KEC4303.0001		POWER ENTRY MODULE J107			023
7		71468	DM53744-6		POWER CONTACTS			024
1		61935	4303.2912		FUSE DRAWER			025
20		09922	RM24M-9D28		CONTACT,PIN			026
18		09922	RC16M-12D28		CONTACT, SOCKET			027
10		81349	M24308/26-1		CONNECTOR, SCREW-LOCK ASSEMBLY, FEMALE	MIL-C-24308/26		028
1		75915	313002		FUSE, F1			029

G01 QTY REQD	U OF M	CAGE CODE	PART OR IDENTIFYING NO	SYM	NOMENCLATURE OR DESCRIPTION	GOVERNMENT IDENTIFICATION	INTERNAL IDENTIFICATION	FIND NO.
3		12040	LM317T		VOLTAGE REGULATOR U1-U3			030
5		13103	4880		MOUNTING KIT, TO-220			031
2		71785	MS-2-151		MARKER STRIP			032
2		71785	MS-2-140		MARKER STRIP			033
4		83330	2327		STANDOFF, .50X8-32			034
4		83330	2320		STANDOFF, .25X6-32			035
12			2330		STANDOFF, .25X4-40			036
				*	FIND NO. 037 NEVER USED *			
4		89265	KUEP-11D15-24		RELAY, DPDT 28V K1-K4			038
4		89265	27E400		SOCKET			039
4		89265	20C254		HOLD DOWN SPRING, RELAY			040
2		81349	JANTX1N3826A	E	DIODE VR1-VR2	MIL-S-19500/115		041

G01 QTY REQD	U OF M	CAGE CODE	PART OR IDENTIFYING NO	SYM	NOMENCLATURE OR DESCRIPTION	GOVERNMENT IDENTIFICATION	INTERNAL IDENTIFICATION	FIND NO.
4		81349	JANTX1N645-1		DIODE CR4-CR7	MIL-S-19500/240		042
					* FIND NO. 043 NEVER USED *			
1		81349	JANTX1N748A		DIODE VR4	MIL-S-19500/127		044
2		04713	TIP50		TRANSISTOR, 400V, 1A, TO220 Q1-Q2			045
10		81349	RLR07C5101GR		RESISTOR R1-R10	MIL-R-39017/1		046
					* FIND NO. 047 - 049 NEVER USED *			
3		81349	RLR07C1000GR		RESISTOR, FIXED R14-R16	MIL-R-39017/1		050
2		81349	RLR07C1202GR		RESISTOR, FIXED R17,R19	MIL-R-39017/1		051
2		81349	RLR07C3300GR		RESISTOR, FIXED R18,R20	MIL-R-39017/1		052

G01 QTY REQD	U OF M	CAGE CODE	PART OR IDENTIFYING NO	SYM	NOMENCLATURE OR DESCRIPTION	GOVERNMENT IDENTIFICATION	INTERNAL IDENTIFICATION	FIND NO.
1		14749	A28MT210-M		POWER SUPPLY, 28V 2.2A PS1			053
1			AD420911G02		BRACKET, LED REGULATOR			054
1			DD420941H02		COVER, TEST POINT			055
18		81349	M39024/10-01		TIP JACK	MIL-J-39024/10		056
1		81349	M39024/10-03		JACK, TIP	MIL-J-39024/10		057
10		81349	M39024/10-02		JACK, TIP	MIL-J-39024/10		058
2		91833	493(KEYSTONE)		HANDLE			059
5		08717	2L5WGTPFL		LED, GREEN DS1-DS5			060
72	IN		(63111BC08ANN9)		WIRE, INSUL, TFL, 8 AWG, STRD, WHT	MIL-W-16878		061
			(63111BC08ANN1)	ALT				
2		96906	MS35489-46		GROMMET	MS35489		062
2			DD416678H01		BRACKET			063

G01 QTY REQD	U OF M	CAGE CODE	PART OR IDENTIFYING NO	SYM	NOMENCLATURE OR DESCRIPTION	GOVERNMENT IDENTIFICATION	INTERNAL IDENTIFICATION	FIND NO.
1			006-00440-4		TERMINAL STRIP, TYPE 20011			064
1			DD420949H01		VECTOR BOARD			065
1			AD420911G02		BRACKET, LED REGULATOR			066
1			DD420941H02		COVER, TEST POINT			067
1		91833	15236(KEYSTONE)		TERMINAL BOARD SEE NOTE 2			068
1		02660	G3B10-4SNH		CONNECTOR, CIRC, JAMNUT RECEPT J108			069
4		09922	RC16M-23D28		CONTACT,SOCKET			070

NOTE 1: PARENTHETIC IDENTITIES ARE FOR REFERENCE, EXCEPT THAT THEY MAY BE USED BY NORTHROP GRUMMAN OR ITS SUBCONTRACTORS IN LIEU OF OTHER IDENTITIES SHOWN.

UNLESS OTHERWISE DOCUMENTED, THE SUPERSEDURE PARTS LIST, 97942-578R500, IS THE AUTHORITY FOR SUPERSEDURES, UNLESS OTHERWISE SPECIFIED ON CONTRACT, PROCUREMENT ORDER OR PROGRAM DIRECTIVE.

IDENTIFY PARTS DEFINED ON THIS PARTS LIST PER MIL-STD-130, UNLESS OTHERWISE SPECIFIED ON CONTRACT OR PROCUREMENT ORDER.

PART OR IDENTIFYING NUMBERS CREATED FROM INTERNAL MATERIAL OR PROCESS SPECIFICATIONS MAY BE STRUCTURED ACCORDING TO 97942-581R515.

U OF M = UNIT OF MEASURE
ALT = ALTERNATE ITEM
E = SENSITIVE ELECTRONIC DEVICE

NOTE 2: FOR FIND NO 068: PART CONSISTS OF 5 PCS. SEPARATE AT SCORE LINES AND DISCARD UNUSED PARTS.

*** END OF PARTS LIST AD421402 ***
*** TOTAL NUMBER OF SHEETS = 9 ***
*** RUN DATE: 10/08/96 RUN TIME: 17:03:27 ***

* PL AT THIS REV APPROVED FOR MANUFACTURE, BUT NOT TRACING RELEASED (NTR) TO VAULT *

DRAFTER	ENGRG	NORTHROP GRUMMAN CORPORATION BALTIMORE, MARYLAND 21203	CAGE CODE 18323	PARTS LIST NO. PLAD421404	ALL SHEETS REV: 01
CHECKED	MFG			SHEET 1	SIZE A
DFTG SUPV	MGT	CONTR NO. DTFA01-88-C-00037 CUSTOMER	TITLE: AMPLIFIER PANEL ASSEMBLY		
			ORIGINAL DATE OF PL 96-05-02		

DEFINED ON THIS PARTS LIST

PART OR IDENTIFYING NO.	NOMENCLATURE OR DESCRIPTION	PART OR IDENTIFYING NO.	NOMENCLATURE OR DESCRIPTION
AD421404G01	AMPLIFIER PANEL ASSY		

APPLICATION		REVISIONS			
NEXT ASSY	USED ON	REV	DESCRIPTION	DATE	APPROVED
AD421401	LLRF T/S				

PARTS LIST
FOR CADO GRAPHIC
AD421404 REV

G01 QTY REQD	U OF M	CAGE CODE	PART OR IDENTIFYING NO	SYM	NOMENCLATURE OR DESCRIPTION	GOVERNMENT IDENTIFICATION	INTERNAL IDENTIFICATION	FIND NO.
1			DD421404H01		NO PART MASTER			001
1			DD421408H01		NO PART MASTER			002
REF			SD421404		SCHEMATIC DIAGRAM, AMP PANEL			003
REF			954A146		FASTENER STANDARDS			004
REF			6589A14		PREFERRED WIRE CABLE			005
				*	FIND NO. 006 - 008 NEVER USED *			
1			AD421429G01		PREAMP ASSY			009

NOTE 1: PARENTHETIC IDENTITIES ARE FOR REFERENCE, EXCEPT THAT THEY MAY BE USED BY NORTHROP GRUMMAN OR ITS SUBCONTRACTORS IN LIEU OF OTHER IDENTITIES SHOWN.

UNLESS OTHERWISE DOCUMENTED, THE SUPERSEDURE PARTS LIST, 97942-578R500, IS THE AUTHORITY FOR SUPERSEDURES, UNLESS OTHERWISE SPECIFIED ON CONTRACT, PROCUREMENT ORDER OR PROGRAM DIRECTIVE.

IDENTIFY PARTS DEFINED ON THIS PARTS LIST PER MIL-STD-130, UNLESS OTHERWISE SPECIFIED ON CONTRACT OR PROCUREMENT ORDER.

PART OR IDENTIFYING NUMBERS CREATED FROM INTERNAL MATERIAL OR PROCESS SPECIFICATIONS MAY BE STRUCTURED ACCORDING TO 97942-581R515.

U OF M = UNIT OF MEASURE

*** END OF PARTS LIST AD421404 ***
*** TOTAL NUMBER OF SHEETS = 3 ***
*** RUN DATE: 07/12/96 RUN TIME: 16:41:11 ***

*** DRAFTING PARTS LIST ONLY *** NOT FOR RELEASE ***

DRAFTER	ENGRG	NORTHROP GRUMMAN CORPORATION BALTIMORE, MARYLAND 21203	CAGE CODE 18323	PARTS LIST NO. PLAD421405	ALL SHEETS REV: 03
CHECKED	MFG			SHEET 1	SIZE A
		CONTR NO. DTFA01-88-C-00037	TITLE: INTERFACE BD ASSY		
DFTG SUPV	MGT				
		CUSTOMER	ORIGINAL DATE OF PL 96-04-30		

DEFINED ON THIS PARTS LIST

PART OR IDENTIFYING NO.	NOMENCLATURE OR DESCRIPTION	PART OR IDENTIFYING NO.	NOMENCLATURE OR DESCRIPTION
AD421405G01	INTERFACE BOARD ASSY		

APPLICATION			REVISIONS			
NEXT ASSY	USED ON		REV	DESCRIPTION	DATE	APPROVED
AA421430	ARSR4 CATS	PARTS LIST				
AD421430	ARSR4 CATS	FOR CADO GRAPHIC				
		AD421405 REV				

G01 QTY REQD	U OF M	CAGE CODE	PART OR IDENTIFYING NO	SYM	NOMENCLATURE OR DESCRIPTION	GOVERNMENT IDENTIFICATION	INTERNAL IDENTIFICATION	FIND NO.
1		82893	4617-3		CIRCUIT BOARD			001
REF			SD421409		NO DOC MASTER			002
12		81349	M39014/1-1593		CAPACITOR C9-C10,C12-C13	MIL-C-39014/1		003
3		01295	AM26LS31PC	E	MICROCIRCUIT, LINEAR, (26LS31) U1-U2,U15			004
1		34335	AM26LS32PC	E	MICROCIRCUIT, LINEAR, (26LS32) U3			005
2		01295	SN74ALS08N	E	MICROCIRCUIT, QUAD AND U4-U5			006
1		01295	SN74ALS32N	E	MICROCIRCUIT, QUAD OR U6			007
1		01295	SN74ALS04N		MICROCIRCUIT, HEX INVERTER U7			008

G01 QTY REQD	U OF M	CAGE CODE	PART OR IDENTIFYING NO	SYM	NOMENCLATURE OR DESCRIPTION	GOVERNMENT IDENTIFICATION	INTERNAL IDENTIFICATION	FIND NO.
1		01295	SN74ALS02N		MICROCIRCUIT, DIGITAL, (74ALS02) U8			009
4		22626	65503-136		TEST POINT HEADER			010
4		91506	514-AG10F		DIP SOCKET, 14 PIN WIRE WRAP			011
10		91506	516-AG10F		DIP SOCKET, 16 PIN WIRE WRAP			012
1		91506	520-AG10F		DIP SOCKET, 20 PIN WIRE WRAP			013
1		82893	T68/C		WIRE WRAP TERMINALS, 100 PIECES			014
3		81349	JAN1N645		DIODE CR1-CR3	MIL-S-19500/240		015
3		81349	RCR07G302JS		RESISTOR, FIXED R2	MIL-R-39008/1		016
3		81349	M8340102M33R0GA	E	RESISTOR, FIXED Z2-Z4	MIL-R-83401/2		017

G01 QTY REQD	U OF M	CAGE CODE	PART OR IDENTIFYING NO	SYM	NOMENCLATURE OR DESCRIPTION	GOVERNMENT IDENTIFICATION	INTERNAL IDENTIFICATION	FIND NO.
1		81349	M24308/2-14		CONNECTOR	MIL-C-24308/2		018
		00799	204518-2	ALT				
2		01295	SN75451BP		LAMP DRIVER U9-U10			019
2		91506	1116-3G1		COMPONENT CARRIER, 16 PIN			020
1		27014	LM139	E	MICROCIRCUIT,COMPARATOR U11			021
1		1ES66	MAX233A	E	MICROCIRCUIT, RS-232 TRANSCEIVER U12			022
1		81349	M8340102M1001GB	E	RESISTOR, NETWORK Z1	MIL-R-83401/2		023
2		81349	RLR07C1002GR		RESISTOR R4,R6	MIL-R-39017/1		024
1		81349	RLR07C1004GR		RESISTOR, FIXED R5	MIL-R-39017/1		025

G01 QTY REQD	U OF M	CAGE CODE	PART OR IDENTIFYING NO	SYM	NOMENCLATURE OR DESCRIPTION	GOVERNMENT IDENTIFICATION	INTERNAL IDENTIFICATION	FIND NO.
1		81349	RLR07C3001GR		RESISTOR 3K R7	MIL-R-39017/1		026
1		81349	RJR24FX503P		RESISTOR, VAR, (ADJUSTMENT TYPE) R8	MIL-R-39035/2		027
2		91506	508-AG10F		DIP SOCKET, 8 PIN WIRE WRAP			028
2		81349	M24308/26-1F		CONNECTOR, SCREW-LOCK ASSEMBLY, FEMALE	MIL-C-24308/26		029
4		65026	104JEW	E	CAPACITOR, UNDER DIP, DECOUPLING, 16 PIN C1-C3			030
6		65026	104JEX		CAPACITOR, UNDER DIP, DECOUPLING, 20 PIN C4-C8			031
1		81349	M39003/01-6093	HS E	CAPACITOR, ELECTROLYTIC, TANTALUM C11	MIL-C-39003/1		032

G01 QTY REQD	U OF M	CAGE CODE	PART OR IDENTIFYING NO	SYM	NOMENCLATURE OR DESCRIPTION	GOVERNMENT IDENTIFICATION	INTERNAL IDENTIFICATION	FIND NO.
1		81349	RLR07C1001GR		RESISTOR, FIXED R1	MIL-R-39017/1		033
1		01295	SN74LS138N		MICROCIRCUIT, DIGITAL, (74LS138) U13			034
1		91637	XO-43B-1.228		CLOCK OSCILLATOR, 1.228MHZ G1			035
1			DA421405H01		PROGRAMMED PAL U14			036
2		00779	544283-1		SIP SOCKETS, 20 PIN WIRE WRAP			037

NOTE 1: PARENTHETIC IDENTITIES ARE FOR REFERENCE, EXCEPT THAT THEY MAY BE USED BY NORTHROP GRUMMAN OR ITS SUBCONTRACTORS IN LIEU OF OTHER IDENTITIES SHOWN.

UNLESS OTHERWISE DOCUMENTED, THE SUPERSEDURE PARTS LIST, 97942-578R500, IS THE AUTHORITY FOR SUPERSEDURES, UNLESS OTHERWISE SPECIFIED ON CONTRACT, PROCUREMENT ORDER OR PROGRAM DIRECTIVE.

IDENTIFY PARTS DEFINED ON THIS PARTS LIST PER MIL-STD-130, UNLESS OTHERWISE SPECIFIED ON CONTRACT OR PROCUREMENT ORDER.

PART OR IDENTIFYING NUMBERS CREATED FROM INTERNAL MATERIAL OR PROCESS SPECIFICATIONS MAY BE STRUCTURED ACCORDING TO 97942-581R515.

U OF M = UNIT OF MEASURE
ALT = ALTERNATE ITEM
E = SENSITIVE ELECTRONIC DEVICE
HS = HEAT SENSITIVE ITEM

*** END OF PARTS LIST AD421405 ***
*** TOTAL NUMBER OF SHEETS = 7 ***
*** RUN DATE: 06/10/97 RUN TIME: 14:38:51 ***

```
*** DRAFTING PARTS LIST ONLY    *** NOT FOR RELEASE ***
DRAFTER                 * ENGRG                 *NORTHROP GRUMMAN CORPORATION* CAGE * PARTS LIST NO.* ALL SHEETS
                        *                       * BALTIMORE, MARYLAND  21203 * CODE * PLAD421410    * REV: 03
                        *                       *                            * 18323*                *
- - - - - - - - - - - - -*- - - - - - - - - - - -*                            *      *                *
CHECKED                 *     SERIALIZED        *                            *      * SHEET   1      * SIZE A
                        *      ASSEMBLY         *- - - - - - - - - - - - - - - * - - - - - - - - - - - - - - - - - - -
                        *                       * CONTR NO.                  * TITLE: PAM FIXTURE ASSY
- - - - - - - - - - - - -*     SEE GRAPHIC       * DTFA01-88-C-00037          *
DFTG SUPV               *        FOR            *- - - - - - - - - - - - - - - *
                        *       OTHER           * CUSTOMER                   * - - - - - - - - - - - - - - - - - - -
                        *      APPROVALS        *                            * ORIGINAL DATE OF PL 96-05-02
- - - - - - - - - - - - - - - - - - - - - - - - - - - - - - - - - - - - - - - - - - - - - - - - - - - - - - - - - - - - -
                                                DEFINED ON THIS PARTS LIST
        PART OR              NOMENCLATURE OR                PART OR              NOMENCLATURE OR
     IDENTIFYING NO.           DESCRIPTION              IDENTIFYING NO.           DESCRIPTION
   AD421410G01          PAM FIXTURE ASSY
- - - - - - - - - - - - - - - - - - - - - - - - - - - - - - - - - - - - - - - - - - - - - - - - - - - - - - - - - - - - -
          APPLICATION                   *                          *                      REVISIONS
- - - - - - - - - - - - - - - - - - - - -*                          * - - - - - - - - - - - - - - - - - - - - - - - - - - -
   NEXT ASSY     *    USED ON           *                          * REV *     DESCRIPTION     *   DATE   *   APPROVED
- - - - - - - - - *- - - - - - - - - - -*                          * - - *- - - - - - - - - - - - *- - - - - -*- - - - - - -
KA421400         * ARSR4 CATS           *     PARTS LIST           *     *                     *          *
                 *                      *  FOR CADO GRAPHIC        *     *                     *          *
                 *                      *AD421410    REV           *     *                     *          *
                 *                      *-------------------------*     *                     *          *
```

G01 QTY REQD	U OF M	CAGE CODE	PART OR IDENTIFYING NO	SYM	NOMENCLATURE OR DESCRIPTION	GOVERNMENT IDENTIFICATION	INTERNAL IDENTIFICATION	FIND NO.
1			AD421412G01		COVER, TOP			001
1			AD421411G01		ENDPLATE, LEFT			002
1			AD421411G02		ENDPLATE, RIGHT			003
1			DD421412H01		BOTTOM PLATE			004
1			AD421790G01		HEAT SINK			005
2			DD421449H02		BRACKET, ATTENUATOR			006
1			AA421413G01		INPUT TRANSISTION ASSY			007
1			AA421414G01		4:1 COMBINER ASSY			008
1			DD421791H01		BAFFLE			009
1			DD421792H01		COVER, PROTECTIVE			010
1			DD421446H05		BRACKET, COUPLER MOUNT			011
1			DD421957H01		CAP, DUAL			012
1		97942	STE-00-PETS-70448		COMBINER SHIELD			013

G01 QTY REQD	U OF M	CAGE CODE	PART OR IDENTIFYING NO	SYM	NOMENCLATURE OR DESCRIPTION	GOVERNMENT IDENTIFICATION	INTERNAL IDENTIFICATION	FIND NO.
					* FIND NO. 014 - 019 NEVER USED *			
REF			954A146		PFD FASTENER HDW DWG		954A146	020
REF			6589A14		PFD,WIRE CABLE & WIRING DVCS		6589A14	021
REF			SD421410		SCHEMATIC, PAM FIXTURE			022
					* FIND NO. 023 - 049 NEVER USED *			
5		16902	06270(SIMPSON)		PANEL METER, 500MADC ANALOG M1-M5			050
5		75915	3AG1A312		FUSE, 1A			051
6		75915	357002		FUSE HOLDER			052
2		93459	1-10		ATTENUATOR,10DB N TYPE (LUCAS AEROSPACE) AT2-AT3			053
1		93459	45-30-33		ATTENUATOR, 30 DB AT1			054

G01 QTY REQD	U OF M	CAGE CODE	PART OR IDENTIFYING NO	SYM	NOMENCLATURE OR DESCRIPTION	GOVERNMENT IDENTIFICATION	INTERNAL IDENTIFICATION	FIND NO.
1		59120	3002-30		DIRECTIONAL COUPLER,30DB (LORAL-NARDA)			055
1		61697	3681-0000-02		ADAPTER, N M TO N M			056
2		26805	3080-2302-00		NFF CONN.			057
1		26805	3082-2242-00		ADAPTER,N JACK TO SMA PLUG			058
1		81349	M39024/10-03		JACK, TIP TP6	MIL-J-39024/10		059
5		81349	M39024/10-02		JACK, TIP TP1-TP5	MIL-J-39024/10		060
5		82484	673D827F075HJ1C		CAPACITOR, 820 UFD, 75WVDC			061
1		06324	630B006M091M		FITTING, FLANGE MOUNT			062
1		50541	LPMY15-0089		CONNECTOR, HYPERTRONICS P1			063
1			35F1642		TERMINAL BOARD, 5 SECT, 1.5 X 1.19			064

G01 QTY REQD	U OF M	CAGE CODE	PART OR IDENTIFYING NO	SYM	NOMENCLATURE OR DESCRIPTION	GOVERNMENT IDENTIFICATION	INTERNAL IDENTIFICATION	FIND NO.
					* FIND NO. 065 NEVER USED *			
3			MPA406N		SWITCH, PUSH ON/OFF, 4PDT			066
2		32284	028316		BLOWER, 115VAC B1-B2			067
2		32284	4C657		GUARD, BLOWER			068
5		80353	SC1A		RESISTOR, .75 OHM R1-R5			069
13		81349	RWR78S1R00FR		RESISTOR, FIXED R6-R18	MIL-R-39007/7		070
1		81349	RWR74SR464FR		RESISTOR R31	MIL-R-39007/6		071
2			RNR32G222JS		RESISTOR, 2.2K, 1W R19-R20			072
25			M55155/109I02		TERMINAL, STANDOFF, #6 SCREW E2-E26			073

G01 QTY REQD	U OF M	CAGE CODE	PART OR IDENTIFYING NO	SYM	NOMENCLATURE OR DESCRIPTION	GOVERNMENT IDENTIFICATION	INTERNAL IDENTIFICATION	FIND NO.
1		81349	M55155/26XC02		TERMINAL,STUD E1	MIL-T-55155/26		074
4			990C308H01	V	BUMPER			075
2		26805	3001-1310-02		CAP, "N" CONNECTOR			076
5		86928	4521-77-100-2-T1		SPRING CLIP, STEEL			077
1		75915	3AG5A312		FUSE, 5A F6			078
10		81349	RLR07C30R0GS		RESISTOR, 30 OHM R21-R30	MIL-R-39017/1		079
1		12097	TYPE-169		TEMPERATURE METER M6			080
1		31713	THJ035		THERMISTOR, TYPE J			081
2		71619	521-9183		L.E.D. DS1-DS2			082
2		72619	515-0005		MOUNT, LED			083

G01 QTY REQD	U OF M	CAGE CODE	PART OR IDENTIFYING NO	SYM	NOMENCLATURE OR DESCRIPTION	GOVERNMENT IDENTIFICATION	INTERNAL IDENTIFICATION	FIND NO.
1		97942	646A057H03	V	CONNECTOR, RECEPTACLE, ELEC P2			084
1		16428	17612		POWER CORD			085
1			2216-S3A		TERMINAL, SPADE, AWG 22-16, #6 SCREW			086

NOTE 1: PARENTHETIC IDENTITIES ARE FOR REFERENCE, EXCEPT THAT THEY MAY BE USED BY NORTHROP GRUMMAN OR ITS SUBCONTRACTORS IN LIEU OF OTHER IDENTITIES SHOWN.

UNLESS OTHERWISE DOCUMENTED, THE SUPERSEDURE PARTS LIST, 97942-578R500, IS THE AUTHORITY FOR SUPERSEDURES, UNLESS OTHERWISE SPECIFIED ON CONTRACT, PROCUREMENT ORDER OR PROGRAM DIRECTIVE.

IDENTIFY PARTS DEFINED ON THIS PARTS LIST PER MIL-STD-130, UNLESS OTHERWISE SPECIFIED ON CONTRACT OR PROCUREMENT ORDER.

PART OR IDENTIFYING NUMBERS CREATED FROM INTERNAL MATERIAL OR PROCESS SPECIFICATIONS MAY BE STRUCTURED ACCORDING TO 97942-581R515.

U OF M = UNIT OF MEASURE

V = VENDOR ITEM - SEE CONTROL DRAWING

*** END OF PARTS LIST AD421410 ***

*** TOTAL NUMBER OF SHEETS = 8 ***

*** RUN DATE: 06/24/97 RUN TIME: 15:32:35 ***

*** DRAFTING PARTS LIST ONLY *** NOT FOR RELEASE ***

DRAFTER	ENGRG	NORTHROP GRUMMAN CORPORATION BALTIMORE, MARYLAND 21203	CAGE CODE 18323	PARTS LIST NO. PLAA421413	ALL SHEETS REV: 01
CHECKED	MFG			SHEET 1	SIZE A
DFTG SUPV	MGT	CONTR NO. DTFA01-88-C-00037	TITLE: INPUT TRANSISTION ASSY		
		CUSTOMER	ORIGINAL DATE OF PL 96-11-08		

DEFINED ON THIS PARTS LIST

PART OR IDENTIFYING NO.	NOMENCLATURE OR DESCRIPTION	PART OR IDENTIFYING NO.	NOMENCLATURE OR DESCRIPTION
AA421413G01	INPUT TRANSISTION ASSY		

APPLICATION		REVISIONS			
NEXT ASSY	USED ON	REV	DESCRIPTION	DATE	APPROVED
AD421410	ARSR4 CATS				

PARTS LIST
FOR CADO GRAPHIC
AA421413 REV

G01 QTY REQD	U OF M	CAGE CODE	PART OR IDENTIFYING NO	SYM	NOMENCLATURE OR DESCRIPTION	GOVERNMENT IDENTIFICATION	INTERNAL IDENTIFICATION	FIND NO.
1			DA421413H01		INPUT TRANSISTION SUBSTRATE			001
1		16179	2052-1618-02		CONNECTOR J1			002
1		97942	1A20897H06	V	CONTACT,SPRINGFINGER			003
REF			954A146		FASTENER STANDARDS			004
1		97942	1A20897H05	V	CONTACT,SPRINGFINGER			005

NOTE 1: PARENTHETIC IDENTITIES ARE FOR REFERENCE, EXCEPT THAT THEY MAY BE USED BY NORTHROP GRUMMAN OR ITS SUBCONTRACTORS IN LIEU OF OTHER IDENTITIES SHOWN.

UNLESS OTHERWISE DOCUMENTED, THE SUPERSEDURE PARTS LIST, 97942-578R500, IS THE AUTHORITY FOR SUPERSEDURES, UNLESS OTHERWISE SPECIFIED ON CONTRACT, PROCUREMENT ORDER OR PROGRAM DIRECTIVE.

IDENTIFY PARTS DEFINED ON THIS PARTS LIST PER MIL-STD-130, UNLESS OTHERWISE SPECIFIED ON CONTRACT OR PROCUREMENT ORDER.

PART OR IDENTIFYING NUMBERS CREATED FROM INTERNAL MATERIAL OR PROCESS SPECIFICATIONS MAY BE STRUCTURED ACCORDING TO 97942-581R515.

U OF M = UNIT OF MEASURE

V = VENDOR ITEM - SEE CONTROL DRAWING

*** END OF PARTS LIST AA421413 ***

*** TOTAL NUMBER OF SHEETS = 3 ***

*** RUN DATE: 05/07/97 RUN TIME: 14:07:40 ***

*** DRAFTING PARTS LIST ONLY *** NOT FOR RELEASE ***

DRAFTER	ENGRG	NORTHROP GRUMMAN CORPORATION BALTIMORE, MARYLAND 21203	CAGE CODE 18323	PARTS LIST NO. PLAA421414	ALL SHEETS REV: 01
CHECKED	MFG			SHEET 1	SIZE A
DFTG SUPV	MGT	CONTR NO. DTFA01-88-C-00037 CUSTOMER	TITLE: 4:1 COMBINER ASSY ORIGINAL DATE OF PL 96-11-08		

DEFINED ON THIS PARTS LIST

PART OR IDENTIFYING NO.	NOMENCLATURE OR DESCRIPTION	PART OR IDENTIFYING NO.	NOMENCLATURE OR DESCRIPTION
AA421414G01	4:1 COMBINER ASSY		

APPLICATION			REVISIONS			
NEXT ASSY	USED ON		REV	DESCRIPTION	DATE	APPROVED
AD421410	ARSR4 CATS	PARTS LIST FOR CADO GRAPHIC AA421414 REV				

G01 QTY REQD	U OF M	CAGE CODE	PART OR IDENTIFYING NO	SYM	NOMENCLATURE OR DESCRIPTION	GOVERNMENT IDENTIFICATION	INTERNAL IDENTIFICATION	FIND NO.
1			DA421795H01		CHASSIS, 4:1 COMBINER			001
1			DA421794H01		CHASSIS COVER, 4:1 COMBINER			002
1			DA421414H01		4:1 COMBINER SUBSTRATE			003
3		97942	1A21009H01	V	STUD, PRESS-IN			004
				*	FIND NO. 005 NEVER USED *			
2			DA421793H01		HONEYCOMB SPACER, 4:1 COMBINER			006
				*	FIND NO. 007 NEVER USED *			
1		16179	2052-1618-02		CONNECTOR			008
3		97942	1A20922H01	V	RESISTOR,FLANGE,FIXED, MICROSTRIP,HI POWER			009
4		97942	1A20897H06	V	CONTACT,SPRINGFINGER			010
1		97942	127B257H01		SPACER,DIELECTRIC			011

NOTE 1: PARENTHETIC IDENTITIES ARE FOR REFERENCE, EXCEPT THAT THEY MAY BE USED BY NORTHROP GRUMMAN OR ITS SUBCONTRACTORS IN LIEU OF OTHER IDENTITIES SHOWN.

UNLESS OTHERWISE DOCUMENTED, THE SUPERSEDURE PARTS LIST, 97942-578R500, IS THE AUTHORITY FOR SUPERSEDURES, UNLESS OTHERWISE SPECIFIED ON CONTRACT, PROCUREMENT ORDER OR PROGRAM DIRECTIVE.

IDENTIFY PARTS DEFINED ON THIS PARTS LIST PER MIL-STD-130, UNLESS OTHERWISE SPECIFIED ON CONTRACT OR PROCUREMENT ORDER.

PART OR IDENTIFYING NUMBERS CREATED FROM INTERNAL MATERIAL OR PROCESS SPECIFICATIONS MAY BE STRUCTURED ACCORDING TO 97942-581R515.

U OF M = UNIT OF MEASURE
V = VENDOR ITEM - SEE CONTROL DRAWING

*** END OF PARTS LIST AA421414 ***
*** TOTAL NUMBER OF SHEETS = 3 ***
*** RUN DATE: 07/17/97 RUN TIME: 08:54:09 ***

*** DRAFTING PARTS LIST ONLY *** NOT FOR RELEASE ***

DRAFTER	ENGRG	NORTHROP GRUMMAN CORPORATION BALTIMORE, MARYLAND 21203	CAGE CODE 18323	PARTS LIST NO. PLAD421424	ALL SHEETS REV: 01
CHECKED	MFG			SHEET 1	SIZE A
DFTG SUPV	MGT	CONTR NO. DTFA01-88-C-00037 CUSTOMER	TITLE: CABLE ASSY, PREAMP		
			ORIGINAL DATE OF PL 96-05-02		

DEFINED ON THIS PARTS LIST

PART OR IDENTIFYING NO.	NOMENCLATURE OR DESCRIPTION	PART OR IDENTIFYING NO.	NOMENCLATURE OR DESCRIPTION
AD421424G01	CABLE ASSY, PREAMP		

APPLICATION		REVISIONS			
NEXT ASSY	USED ON	REV	DESCRIPTION	DATE	APPROVED
KA421400	ARSR4 CATS				

PARTS LIST
FOR CADO GRAPHIC
AD421424 REV

G01 QTY REQD	U OF M	CAGE CODE	PART OR IDENTIFYING NO	SYM	NOMENCLATURE OR DESCRIPTION	GOVERNMENT IDENTIFICATION	INTERNAL IDENTIFICATION	FIND NO.
1		50541	LPMY15-0089		CONNECTOR, HYPERTRONICS J1			001
1		81349	M24308/2-3F		CONNECTOR, RECT, MIN, RECEPTACLE, 25 SOCKET P2	MIL-C-24308/2		002
1		00779	207345-1		HOOD			003
1		71468	DDM24W7SA197		CONNECTOR, COMBO D SUB P3			004
2		71468	DM53744-6		POWER CONTACTS			005
5		71468	DM53744-7		CONTACT			006
1		00779	207476-1		HOOD			007
REF			6589A14		PREFERRED WIRE CABLE			008

NOTE 1: PARENTHETIC IDENTITIES ARE FOR REFERENCE, EXCEPT THAT THEY MAY BE USED BY NORTHROP GRUMMAN OR ITS SUBCONTRACTORS IN LIEU OF OTHER IDENTITIES SHOWN.

UNLESS OTHERWISE DOCUMENTED, THE SUPERSEDURE PARTS LIST, 97942-578R500, IS THE AUTHORITY FOR SUPERSEDURES, UNLESS OTHERWISE SPECIFIED ON CONTRACT, PROCUREMENT ORDER OR PROGRAM DIRECTIVE.

IDENTIFY PARTS DEFINED ON THIS PARTS LIST PER MIL-STD-130, UNLESS OTHERWISE SPECIFIED ON CONTRACT OR PROCUREMENT ORDER.

PART OR IDENTIFYING NUMBERS CREATED FROM INTERNAL MATERIAL OR PROCESS SPECIFICATIONS MAY BE STRUCTURED ACCORDING TO 97942-581R515.

U OF M = UNIT OF MEASURE

*** END OF PARTS LIST AD421424 ***
*** TOTAL NUMBER OF SHEETS = 3 ***
*** RUN DATE: 05/07/97 RUN TIME: 14:17:56 ***

*** DRAFTING PARTS LIST ONLY *** NOT FOR RELEASE ***

DRAFTER	ENGRG	NORTHROP GRUMMAN CORPORATION BALTIMORE, MARYLAND 21203	CAGE CODE 18323	PARTS LIST NO. PL AD421425	ALL SHEETS REV: 02
CHECKED	MFG			SHEET 1	SIZE A
DFTG SUPV	MGT	CONTR NO. DTFA01-88-C-00037 CUSTOMER	TITLE: CABLE ASSY, LOOKDOWN DRIVER		
			ORIGINAL DATE OF PL 96-05-02		

DEFINED ON THIS PARTS LIST

PART OR IDENTIFYING NO.	NOMENCLATURE OR DESCRIPTION	PART OR IDENTIFYING NO.	NOMENCLATURE OR DESCRIPTION
AD421425G01	CABLE ASSY, LOOKDOWN DRIVER		

APPLICATION			REVISIONS			
NEXT ASSY	USED ON		REV	DESCRIPTION	DATE	APPROVED
KA421400	ARSR4 CATS	PARTS LIST FOR CADO GRAPHIC AD421425 REV				

G01 QTY REQD	U OF M	CAGE CODE	PART OR IDENTIFYING NO	SYM	NOMENCLATURE OR DESCRIPTION	GOVERNMENT IDENTIFICATION	INTERNAL IDENTIFICATION	FIND NO.
1		50541	LPMY15-0089		CONNECTOR, HYPERTRONICS J1			001
1		81349	M24308/2-3F		CONNECTOR, RECT, MIN, RECEPTACLE, 25 SOCKET P2	MIL-C-24308/2		002
1		81349	M85049/48-2-3F		SHIELD,STRAIGHT	MIL-C-85049/48		003
1		71468	DDM24W7SA197		CONNECTOR, COMBO D SUB P3			004
2		71468	DM53744-6		POWER CONTACTS			005
1		71468	DM53744-7		CONTACT			006
1		71785	DD24661		CLAMP			007
REF			6589A14		PFD,WIRE CABLE & WIRING DVCS		6589A14	008

NOTE 1: PARENTHETIC IDENTITIES ARE FOR REFERENCE, EXCEPT THAT THEY MAY BE USED BY NORTHROP GRUMMAN OR ITS SUBCONTRACTORS IN LIEU OF OTHER IDENTITIES SHOWN.

UNLESS OTHERWISE DOCUMENTED, THE SUPERSEDURE PARTS LIST, 97942-578R500, IS THE AUTHORITY FOR SUPERSEDURES, UNLESS OTHERWISE SPECIFIED ON CONTRACT, PROCUREMENT ORDER OR PROGRAM DIRECTIVE.

IDENTIFY PARTS DEFINED ON THIS PARTS LIST PER MIL-STD-130, UNLESS OTHERWISE SPECIFIED ON CONTRACT OR PROCUREMENT ORDER.

PART OR IDENTIFYING NUMBERS CREATED FROM INTERNAL MATERIAL OR PROCESS SPECIFICATIONS MAY BE STRUCTURED ACCORDING TO 97942-581R515.

U OF M = UNIT OF MEASURE

*** END OF PARTS LIST AD421425 ***
*** TOTAL NUMBER OF SHEETS = 3 ***
*** RUN DATE: 06/06/97 RUN TIME: 10:57:57 ***

*** DRAFTING PARTS LIST ONLY *** NOT FOR RELEASE ***

DRAFTER	ENGRG	NORTHROP GRUMMAN CORPORATION BALTIMORE, MARYLAND 21203	CAGE CODE 18323	PARTS LIST NO. PLAD421426	ALL SHEETS REV: 02
CHECKED	MFG			SHEET 1	SIZE A
DFTG SUPV	MGT	CONTR NO. DTFA01-88-C-00037 CUSTOMER	TITLE: CLASS A AMP BD ASSY		
			ORIGINAL DATE OF PL 96-05-02		

DEFINED ON THIS PARTS LIST

PART OR IDENTIFYING NO.	NOMENCLATURE OR DESCRIPTION	PART OR IDENTIFYING NO.	NOMENCLATURE OR DESCRIPTION
AD421426G01	CLASS A AMPLIFIER BD ASSY		

APPLICATION		REVISIONS			
NEXT ASSY	USED ON	REV	DESCRIPTION	DATE	APPROVED
AD421429	LLRF T/S				

PARTS LIST
FOR CADO GRAPHIC
AD421426 REV

G01 QTY REQD	U OF M	CAGE CODE	PART OR IDENTIFYING NO	SYM	NOMENCLATURE OR DESCRIPTION	GOVERNMENT IDENTIFICATION	INTERNAL IDENTIFICATION	FIND NO.
1		97942	3D57040H01		PRINTED WIRING BOARD			001
AR		97942	80305JV		MICROWAVE MODULE, ASSEMBLY OF		PS80305JV	002
1		81349	CDR12BG8R2ABUR		CAPACITOR, CHIP C1	MIL-C-55681/4		003
1		81349	CDR12BG3R9ABUR		CAPACITOR, CHIP C4	MIL-C-55681/4		004
2		81349	CDR12BG5R6ABUR		CAPACITOR, CHIP C5,C35	MIL-C-55681/4		005
1		81349	CDR12BG100AFUR		CAPACITOR, FIXED C34	MIL-C-55681/4		006
1		81349	CDR12BG6R8ABUR		CAPACITOR, CHIP C36	MIL-C-55681/4		007
14		81349	CDR12BG4R7ABUR		CAPACITOR, FIXED C2-C3,C6-C17	MIL-C-55681/4		008
5		81349	CDR12BG101AJUR		CAPACITOR, FIXED C18,C20,C22,C24,C26	MIL-C-55681/4		009

G01 QTY REQD	U OF M	CAGE CODE	PART OR IDENTIFYING NO	SYM	NOMENCLATURE OR DESCRIPTION	GOVERNMENT IDENTIFICATION	INTERNAL IDENTIFICATION	FIND NO.
5		81349	CDR02BX103BKUR	E	CAPACITOR C28-C32	MIL-C-55681/1		010
1		81349	CDR12BG2R2ABUR		CAPACITOR, FIXED C33	MIL-C-55681/4		011
13		81349	M55342K02B49D9R	E	CHIP RESISTOR R1-R12,R14	MIL-R-55342/2		012
5		97942	645A736H20	V	RESISTOR,FIXED,CHIP R16-R19,R26			013
1		81349	CDR12BG390AFUR		CAPACITOR, CHIP C37	MIL-C-55681/4		014
5		81349	CDR12BP470AJUR		CAPACITOR,CHIP C19,C21,C23,C25,C27	MIL-C-55681/4		015
5		81349	JANTX1N968B-1		DIODE VR1-VR5	MIL-S-19500/117		016
5		14933	88031-H1000		RESISTOR,FIXED FILM,CHIP R29-R33	DESC-DWG-88031		017
		97942	584R014J54	ALT				

G01 QTY REQD	U OF M	CAGE CODE	PART OR IDENTIFYING NO	SYM	NOMENCLATURE OR DESCRIPTION	GOVERNMENT IDENTIFICATION	INTERNAL IDENTIFICATION	FIND NO.
2		14933	88031-H4751		RESISTOR,FIXED FILM,CHIP R27-R28	DESC-DWG-88031		018
		97942	584R014J94	ALT				
1	IN		(13404HX00330022)		RIBBON, CNA, .003 X .020 (0.2 IN)	MIL-G-45204		019
AR		97942	83869NF/H/3		MARKING, RUBBER STAMP AND MACHINE, APPLICATION OF		PS83869NF	020
		97942	83869NB/4	ALT				
				*	FIND NO. 021 NEVER USED *			
10		96906	MS16995-9		SCREW, CAP, SCH, HEX, (.112-40)	MS16995		022
1		97942	586R972H04	V	ATTENUATOR AT1			023
1		97942	1A20877H01	V	ISOLATOR AT2			024
5		50088	SD1853		TRANSISTOR Q1-Q5			025

G01 QTY REQD	U OF M	CAGE CODE	PART OR IDENTIFYING NO	SYM	NOMENCLATURE OR DESCRIPTION	GOVERNMENT IDENTIFICATION	INTERNAL IDENTIFICATION	FIND NO.
					* FIND NO. 026 - 028 NEVER USED *			
1		97942	1A20949H02	V	CONNECTOR, RECEPTACLE, SMA, RT ANGLE, FOUR MNTG HOLES			029
1		97942	152C143H19	V	PIN,CONNECTOR			030
REF		97942	3D57294		SCHEMATIC DIAGRAM			031
1		97942	1A27495G01		FLEX LIST CABLE A			032
REF		97942	1A29216		RL ONLY			033
AR		97942	83869NS/A/2		MARKING, SILK SCREEN AND OFFSET PRINTNG, APPLICATION OF		PS83869NS	034
		97942	(83869NB/4)	ALT				
5		81349	CDR14BP270EJUR		CAPACITOR, FIXED C38-C42	MIL-C-55681/4		035
					* FIND NO. 036 NEVER USED *			

G01 QTY REQD	U OF M	CAGE CODE	PART OR IDENTIFYING NO	SYM	NOMENCLATURE OR DESCRIPTION	GOVERNMENT IDENTIFICATION	INTERNAL IDENTIFICATION	FIND NO.
6		97942	645A736H08	V	RESISTOR,FIXED,CHIP R20-R25			037
REF			954A146		FASTENER STANDARDS SEE NOTE 2			038
REF			6589A14		PREFERRED WIRE CABLE SEE NOTE 3			039

NOTE 1: PARENTHETIC IDENTITIES ARE FOR REFERENCE, EXCEPT THAT THEY MAY BE USED BY NORTHROP GRUMMAN OR ITS SUBCONTRACTORS IN LIEU OF OTHER IDENTITIES SHOWN.

UNLESS OTHERWISE DOCUMENTED, THE SUPERSEDURE PARTS LIST, 97942-578R500, IS THE AUTHORITY FOR SUPERSEDURES, UNLESS OTHERWISE SPECIFIED ON CONTRACT, PROCUREMENT ORDER OR PROGRAM DIRECTIVE.

IDENTIFY PARTS DEFINED ON THIS PARTS LIST PER MIL-STD-130, UNLESS OTHERWISE SPECIFIED ON CONTRACT OR PROCUREMENT ORDER.

PART OR IDENTIFYING NUMBERS CREATED FROM INTERNAL MATERIAL OR PROCESS SPECIFICATIONS MAY BE STRUCTURED ACCORDING TO 97942-581R515.

U OF M = UNIT OF MEASURE
ALT = ALTERNATE ITEM

E = SENSITIVE ELECTRONIC DEVICE
V = VENDOR ITEM - SEE CONTROL DRAWING

NOTE 2: FOR FIND NO 038: FOR ITEM 38, HARDWARE CALLED OUT IN SIMILAR LOCATIONS ON 3D56911G01 IS AN ACCE BLE ALTERNATE

NOTE 3: FOR FIND NO 039: FOR ITEM 39, WIRING AND WIRING DEVICES CALLED OUT IN SIMILAR LOCATIONS OF 3D56 911G01 ARE ACCEPTABLE ALTERNATES

*** END OF PARTS LIST AD421426 ***
*** TOTAL NUMBER OF SHEETS = 7 ***
*** RUN DATE: 10/01/96 RUN TIME: 15:27:51 ***

*** DRAFTING PARTS LIST ONLY *** NOT FOR RELEASE ***

DRAFTER	ENGRG	NORTHROP GRUMMAN CORPORATION BALTIMORE, MARYLAND 21203	CAGE CODE 18323	PARTS LIST NO. PLAD421427	ALL SHEETS REV: 02
CHECKED	MFG			SHEET 1	SIZE A
DFTG SUPV	MGT	CONTR NO. DTFA01-88-C-00037		TITLE: CLASS C AMP BD ASSY	
		CUSTOMER		ORIGINAL DATE OF PL 96-05-02	

DEFINED ON THIS PARTS LIST

PART OR IDENTIFYING NO.	NOMENCLATURE OR DESCRIPTION	PART OR IDENTIFYING NO.	NOMENCLATURE OR DESCRIPTION
AD421427G01	CLASS C AMPLIFIER ASSY		

APPLICATION			REVISIONS			
NEXT ASSY	USED ON		REV	DESCRIPTION	DATE	APPROVED
AD421429	LLRF T/S	PARTS LIST FOR CADO GRAPHIC AD421427 REV				

G01 QTY REQD	U OF M	CAGE CODE	PART OR IDENTIFYING NO	SYM	NOMENCLATURE OR DESCRIPTION	GOVERNMENT IDENTIFICATION	INTERNAL IDENTIFICATION	FIND NO.
1		97942	3D57041G01		PRINTED WIRING BOARD			001
5		97942	1A20212H02	V	RESISTOR,FIXED,FILM, CHIP,HIGH POWER R1-R5			002
2		14933	88031-H10R0		RESISTOR,FIXED FILM,CHIP R6,R13	DESC-DWG-88031		003
1		14933	88033-K5R11		RESISTOR,FIXED FILM,CHIP R7			004
		14933	88033-H5R11	ALT				
3		97942	1A20949H02	V	CONNECTOR, RECEPTACLE, SMA, RT ANGLE, FOUR MNTG HOLES J1-J3			005
4		89661	330C958H28	V	CLIP,SPRING TENSION			006
1		89661	330C958H72	V	CLAMP			007
5		81349	CDR14BG270EJUR		CAPACITOR, CHIP C1-C5	MIL-C-55681/4		008

G01 QTY REQD	U OF M	CAGE CODE	PART OR IDENTIFYING NO	SYM	NOMENCLATURE OR DESCRIPTION	GOVERNMENT IDENTIFICATION	INTERNAL IDENTIFICATION	FIND NO.
5		81349	CDR12BP470AJUR		CAPACITOR,CHIP C6-C10	MIL-C-55681/4		009
4		81349	CDR02BX103BKUR	E	CAPACITOR C11-C14	MIL-C-55681/1		010
2		81349	CWR06NC105MR		CHIP CAPACITOR C16-C17	MIL-C-55365/4		011
1		81349	M39006/22-0599	HS	CAPACITOR, FIXED C18	MIL-C-39006/22		012
4		97942	1A20881H02	V	CAPACITOR C19-C21,C25			013
3		97942	152C143H19	V	PIN,CONNECTOR			014
2		81349	CDR14BP2R2EBUR		CAPACITOR, FIXED C15,C22	MIL-C-55681/4		015
1		97942	1A20877H01	V	ISOLATOR AT1			016
1		97942	1A21093H01	V	TRANSISTOR, NPN, RF POWER, 16.7W, 48V, .82A, 1400 MHZ Q1			017

G01 QTY REQD	U OF M	CAGE CODE	PART OR IDENTIFYING NO	SYM	NOMENCLATURE OR DESCRIPTION	GOVERNMENT IDENTIFICATION	INTERNAL IDENTIFICATION	FIND NO.
2		97942	1A21093H02	V	TRANSISTOR, NPN, RF POWER, 37.5W, 48V, 1.8A, 1400 MHZ Q2-Q3			018
2		97942	1A21093H03	V	TRANSISTOR, NPN, RF POWER, 107 W, 55 V, 5 A, 1400 MHZ Q4-Q5			019
5	IN	81348	QQW343S26S1T		WIRE, COP, TND, 26 AWG, SOL	QQ-W-343	(13430AB26BNNN)	020
2		96906	MS16995-9		SCREW, CAP, SCH, HEX, (.112-40)	MS16995		021
1	IN		(13404HX00330022)		RIBBON, CNA, .003 X .020 (0.6 IN)	MIL-G-45204		022
5		81349	M55342K04B20D0R	E	CHIP RESISTOR R8-R12	MIL-R-55342/4		023
		14933	88031-H20R0	ALT				
1		97942	1A27496G01		FLEX LIST, CABLE B			024

G01 QTY REQD	U OF M	CAGE CODE	PART OR IDENTIFYING NO	SYM	NOMENCLATURE OR DESCRIPTION	GOVERNMENT IDENTIFICATION	INTERNAL IDENTIFICATION	FIND NO.
11		96906	MS16995-2		SCREW,CAP,SCH	MS16995		025
1		97942	128B648H01		COIL L3			026
6		97942	1A21080H01	V	INDUCTOR, SHIELDING BEAD, SURFACE MNT, 60 OHMS L2,L4-L8			027
8		96906	MS16995-3		SCREW, CAPTIVE, SOCKETHEAD, HEX, (.086-56)	MS16995		028
1		97942	1A20877H02	V	ISOLATOR AT2			029
1		97942	586R972H05	V	ATTENUATOR AT3			030
2		81349	CDR14BP470EJUR		CAPACITOR C26,C28	MIL-C-55681/4		031
		81349	CDR14BG470EJUR	ALT				
1		81349	CWR06NC475KR		CAPACITOR C27	MIL-C-55365/4		032

G01 QTY REQD	U OF M	CAGE CODE	PART OR IDENTIFYING NO	SYM	NOMENCLATURE OR DESCRIPTION	GOVERNMENT IDENTIFICATION	INTERNAL IDENTIFICATION	FIND NO.
1		81349	M83517/1-31003		CONNECTOR, SMA, FLANGE MT TAB TERMINAL J4	MIL-C-83517/1		033
1		97942	1A20861H02	V	TRANSISTOR Q6			034
REF			954A146		FASTENER STANDARDS SEE NOTE 2			035
REF			6589A14		PREFERRED WIRE CABLE SEE NOTE 3			036
				*	FIND NO. 037 - 099 NEVER USED *			
AR			53311DQ	B	SILVER CONDUCTIVE ADHESIVE		79500-53311DQ	100
AR		97942	80305JV		MICROWAVE MODULE, ASSEMBLY OF		PS80305JV	101
AR		97942	83869NF/H/3		MARKING, RUBBER STAMP AND MACHINE, APPLICATION OF		PS83869NF	102
		97942	(83869NB/4)	ALT				

G01 QTY REQD	U OF M	CAGE CODE	PART OR IDENTIFYING NO	SYM	NOMENCLATURE OR DESCRIPTION	GOVERNMENT IDENTIFICATION	INTERNAL IDENTIFICATION	FIND NO.
REF		97942	3D57295		SCHEMATIC DIAGRAM			103
REF		97942	1A29216		RL ONLY			104
AR		97942	83869NS/A/2		MARKING, SILK SCREEN AND OFFSET PRINTNG, APPLICATION OF		PS83869NS	105
		97942	(83869NB/4)	ALT				

NOTE 1: PARENTHETIC IDENTITIES ARE FOR REFERENCE, EXCEPT THAT THEY MAY BE USED BY NORTHROP GRUMMAN OR ITS SUBCONTRACTORS IN LIEU OF OTHER IDENTITIES SHOWN.

UNLESS OTHERWISE DOCUMENTED, THE SUPERSEDURE PARTS LIST, 97942-578R500, IS THE AUTHORITY FOR SUPERSEDURES, UNLESS OTHERWISE SPECIFIED ON CONTRACT, PROCUREMENT ORDER OR PROGRAM DIRECTIVE.

IDENTIFY PARTS DEFINED ON THIS PARTS LIST PER MIL-STD-130, UNLESS OTHERWISE SPECIFIED ON CONTRACT OR PROCUREMENT ORDER.

PART OR IDENTIFYING NUMBERS CREATED FROM INTERNAL MATERIAL OR PROCESS SPECIFICATIONS MAY BE STRUCTURED ACCORDING TO 97942-581R515.

U OF M = UNIT OF MEASURE

```
            ALT      = ALTERNATE ITEM
            B        = BULK ITEM
            E        = SENSITIVE ELECTRONIC DEVICE
            HS       = HEAT SENSITIVE ITEM
            V        = VENDOR ITEM - SEE CONTROL DRAWING
NOTE   2:   FOR FIND NO  035: FOR ITEM 35, HARDWARE CALLED OUT IN SIMILAR LOCATIONS OF DWG 3D56910
                              IS AN ACC EPTABLE ALTERNATE
NOTE   3:   FOR FIND NO  036: FOR ITEM 36, WIRING AND WIRING DEVICES CALLED OUT IN SIMILAR LOCATIONS
                              ON 3D56 910G01 ARE ACCEPTABLE ALTERNATES
                         ***     END OF PARTS LIST AD421427            ***
                         ***     TOTAL NUMBER OF SHEETS =  8           ***
                         *** RUN DATE: 10/01/96   RUN TIME: 15:08:02   ***
```

*** DRAFTING PARTS LIST ONLY *** NOT FOR RELEASE ***

DRAFTER	ENGRG	WESTINGHOUSE ELECTRIC CORP. ELECTRONIC SYSTEMS GROUP BALTIMORE, MARYLAND 21203, U. S. A.	CAGE CODE 18323	PARTS LIST NO. PLAD421428	ALL SHEETS REV: 01
CHECKED	MFG			SHEET 1	SIZE A
DFTG SUPV	MGT	CONTR NO. DTFA01-88-C-00037	TITLE: REGULATOR BD ASSY		
		CUSTOMER	ORIGINAL DATE OF PL 96-05-02		

DEFINED ON THIS PARTS LIST

PART OR IDENTIFYING NO.	NOMENCLATURE OR DESCRIPTION	PART OR IDENTIFYING NO.	NOMENCLATURE OR DESCRIPTION
AD421428G01	REGULATOR BD ASSY		

APPLICATION		REVISIONS			
NEXT ASSY	USED ON	REV	DESCRIPTION	DATE	APPROVED
	LLRF T/S				

PARTS LIST
FOR CADO GRAPHIC
AD421428 REV

G01 QTY REQD	U OF M	CAGE CODE	PART OR IDENTIFYING NO	SYM	NOMENCLATURE OR DESCRIPTION	GOVERNMENT IDENTIFICATION	INTERNAL IDENTIFICATION	FIND NO.
1		97942	706J534G01		PRINTED WIRING BOARD			001
REF		97942	3D57447		SCHEMATIC DIAGRAM			002
REF		97942	1A29191	T	TEST SPEC FOR REGULATOR			003
AR		97942	80280SA		CIRCUIT CARD AND ELECTRONIC COMPONENTS ASSEMBLIES, ASSEMBLY OF		PS80280SA	004
AR		97942	83869NS/B/2		MARKING, SILK SCREEN AND OFFSET PRINTNG, APPLICATION OF		PS83869NS	005
AR		97942	83869NF/G/3		MARKING, RUBBER STAMP AND MACHINE, APPLICATION OF		PS83869NF	006
REF		97942	9QS01		MANUFACTURING SPEC			007
				*	FIND NO. 008 - 010 NEVER USED *			
7		81349	M39003/01-7286		CAPACITORS, FIXED C28-C31,C54-C56	MIL-C-39003/1		011

G01 QTY REQD	U OF M	CAGE CODE	PART OR IDENTIFYING NO	SYM	NOMENCLATURE OR DESCRIPTION	GOVERNMENT IDENTIFICATION	INTERNAL IDENTIFICATION	FIND NO.
					* FIND NO. 012 NEVER USED *			
1		81349	M39003/01-7302		CAPACITORS, FIXED C13	MIL-C-39003/1		013
					* FIND NO. 014 NEVER USED *			
9		81349	M39014/01-1575	E	CAPACITOR, FIXED C7,C16-C17,C19-C20 C33-C36	MIL-C-39014/1		015
		81349	M39014/01-1575V	ALT				
19		81349	M39014/01-1593	E	CAPACITOR, FIXED C18,C22-C27,C37,C43-C53	MIL-C-39014/1		016
		81349	M39014/01-1593V	ALT				
1		81349	CCR06CG103GR		CAPACITOR, FIXED C32	MIL-C-20/36		017
6		81349	JANTX1N4148-1	E	SEMICONDUCTOR DEVICE, DIODE, SILICON, SWITCHING CR14-CR17,CR19-CR20	MIL-S-19500/116		018
					* FIND NO. 019 - 022 NEVER USED *			

G01 QTY REQD	U OF M	CAGE CODE	PART OR IDENTIFYING NO	SYM	NOMENCLATURE OR DESCRIPTION	GOVERNMENT IDENTIFICATION	INTERNAL IDENTIFICATION	FIND NO.
1		81349	JANTX1N829-1		SEMICONDUCTOR DEVICE, DIODE,SILICON,VOLTAGE REFERENCE REFERENCE VR1	MIL-S-19500/159		023
				*	FIND NO. 024 NEVER USED *			
1		81349	JANTX2N2222A	E	SEMICONDUCTOR DEVICE, TRANSISTOR,NPN,SILICON, SWITCHING Q15	MIL-S-19500/255		025
				*	FIND NO. 026 NEVER USED *			
3		81349	JANTX2N3501		TRANSISTOR Q19,Q21,Q23	MIL-S-19500/366		027
				*	FIND NO. 028 NEVER USED *			
4		81349	JANTX2N6804		TRANSISTOR Q10,Q18,Q20,Q22	MIL-S-19500/562		029
				*	FIND NO. 030 - 031 NEVER USED *			
1		81349	RLR07C3300GS		RESISTOR, FIXED 330 OHM R41	MIL-R-39017/1		032

G01 QTY REQD	U OF M	CAGE CODE	PART OR IDENTIFYING NO	SYM	NOMENCLATURE OR DESCRIPTION	GOVERNMENT IDENTIFICATION	INTERNAL IDENTIFICATION	FIND NO.
					* FIND NO. 033 NEVER USED *			
2		81349	RER65F1501R		RESISTOR, FIXED R121,R158	MIL-R-39009/1		034
3		81349	RJR26FW202R		RESISTOR,VARIABLE NON WW R47,R53,R59	MIL-R-39035/3		035
26		81349	RLR05C1001GS		RESISTOR, FIXED R35-R36,R48,R50,R52,R54 R56,R58,R60,R62,R64,R74 R78,R85-R86,R89-R91,R95 R103,R117-R119,R125 R152-R153	MIL-R-39017/5		036
6		81349	RLR05C1002GS		RESISTOR, FIXED R29,R39,R68,R75-R77	MIL-R-39017/5		037
5		81349	RLR05C1004GR		RESISTOR, FIXED, FILM,. ER R116,R143-R146	MIL-R-39017/5		038
					* FIND NO. 039 NEVER USED *			

G01 QTY REQD	U OF M	CAGE CODE	PART OR IDENTIFYING NO	SYM	NOMENCLATURE OR DESCRIPTION	GOVERNMENT IDENTIFICATION	INTERNAL IDENTIFICATION	FIND NO.
1		81349	RLR05C2002GS		RESISTOR, FIXED R120	MIL-R-39017/5		040
					* FIND NO. 041 NEVER USED *			
1		81349	RLR05C7501GS		RESISTOR, FIXED R34	MIL-R-39017/5		042
					* FIND NO. 043 - 045 NEVER USED *			
2		81349	RLR05C2201GS		RESISTOR,2.2K R88,R115	MIL-R-39017/5		046
1		81349	RLR05C2202GS		RESISTOR, FIXED R148	MIL-R-39017/5		047
1		81349	RNC55H2612FS	E	RESISTOR, FIXED R80	MIL-R-55182/1		048
4		81349	RLR05C3302GS		RESISTOR,FIXED FILM R49,R55,R61,R113	MIL-R-39017/5		049
8		81349	RLR05C33R0GS		RESISTOR, FIXED R97-R102,R123-R124	MIL-R-39017/5		050
					* FIND NO. 051 NEVER USED *			

G01 QTY REQD	U OF M	CAGE CODE	PART OR IDENTIFYING NO	SYM	NOMENCLATURE OR DESCRIPTION	GOVERNMENT IDENTIFICATION	INTERNAL IDENTIFICATION	FIND NO.
4		81349	RLR05C4700GS		RESISTOR,470 OHMS R82,R92,R96,R126	MIL-R-39017/5		052
8		81349	RLR05C4701GS		RESISTOR, FIXED R40,R67,R87,R93-R94,R104 R128,R130	MIL-R-39017/5		053
4		81349	RLR05C4702GS		RESISTOR R105,R127,R129,R131	MIL-R-39017/5		054
2		81349	RLR05C5101GS		RESISTOR R44,R132	MIL-R-39017/5		055
				*	FIND NO. 056 - 059 NEVER USED *			
1		81349	M39015/3-007WR		RESISTOR,VARIABLE R42	MIL-R-39015/3		060
				*	FIND NO. 061 NEVER USED *			
2		81349	RLR07C5100GS		RESISTOR, FIXED R65-R66	MIL-R-39017/1		062
3		81349	RLR20C2701GS		RESISTOR, FIXED R69,R71-R72	MIL-R-39017/2		063

G01 QTY REQD	U OF M	CAGE CODE	PART OR IDENTIFYING NO	SYM	NOMENCLATURE OR DESCRIPTION	GOVERNMENT IDENTIFICATION	INTERNAL IDENTIFICATION	FIND NO.
					* FIND NO. 064 NEVER USED *			
2		81349	RWR81S2R74FR		RESISTOR, FIXED R51,R57	MIL-R-39007/9		065
					* FIND NO. 066 - 067 NEVER USED *			
4		67268	5962-8688201XX		MICROCIRCUIT, DIP U14,U17,U19,U21	SMD-5962-86882		068
			AD581SH/883	ALT				
2		34335	AM26LS32BDMB	E	MICROCIRCUIT, LINE RECEIVER, QUAD DIFFERENTIAL INPUT U6-U7			069
			5962-8761601EX	ALT				
1		14933	7802301EX	E	MICROCIRCUIT,LINEAR,QUAD DIFFERENTIAL LINE DRIVER U8	DESC-DWG-78023		070
1		14933	8418001XX	E	MICROCIRCUIT,LINEAR, PRECISION VOLTAGE REFERENCE U22	DESC-DWG-84180		071

G01 QTY REQD	U OF M	CAGE CODE	PART OR IDENTIFYING NO	SYM	NOMENCLATURE OR DESCRIPTION	GOVERNMENT IDENTIFICATION	INTERNAL IDENTIFICATION	FIND NO.
1		81349	M38510/34101BCX	E	MICROCIRCUIT, DIP U3	MIL-M-38510/341		072
3		81349	M38510/10107BGX	E	MICROCIRCUIT, CAN SEE NOTE 2 U16,U18,U20	MIL-M-38510/101		073
		97942	(592R109H25)	ALT				
3		81349	M38510/11201BCX		MICROCIRCUIT, DIP SEE NOTE 3 U4-U5,U9	MIL-M-38510/112		074
		97942	(592R109H14)	ALT				
					* FIND NO. 075 NEVER USED *			
1		81349	M38510/31004BCX	E	MICROCIRCUIT, DIP U1	MIL-M-38510/310		076
1		81349	M38510/31402BEX	E	MICROCIRCUIT, DIP U2	MIL-M-38510/314		077
					* FIND NO. 078 - 079 NEVER USED *			
2		96906	MS21422-11		INDUCTOR, .68UF L2-L3	MS21422		080

G01 QTY REQD	U OF M	CAGE CODE	PART OR IDENTIFYING NO	SYM	NOMENCLATURE OR DESCRIPTION	GOVERNMENT IDENTIFICATION	INTERNAL IDENTIFICATION	FIND NO.
8		81349	SE23XC03		TERMINAL,STUD	MIL-T-55155/23		081
				*	FIND NO. 082 - 083 NEVER USED *			
3		81349	M24308/24-33F		CONNECTOR, PCB, DSUB, RTANGLE, W/ PIN CONTACTS J1-J3	MIL-C-24308/24		084
				*	FIND NO. 085 NEVER USED *			
4		97942	585R054H01		INSULATOR, TRANSISTOR			086
4			M38527/09-006S		WASHER, INSULATING	MIL-C-38527/9		087
4		97942	582R540H02		INSULATOR, STEP WASHER			088
2		97942	1A20420H01	V	STRL CHAN, PC BD STIF, 9.90 IN LTH			089
12		97942	1A20420H04	V	STRL CHAN, MTG KIT			090
1		97942	3D57446H01		HEAT SINK			091
1		97942	158C207H01		BRACKET,CAPACITOR			092

G01 QTY REQD	U OF M	CAGE CODE	PART OR IDENTIFYING NO	SYM	NOMENCLATURE OR DESCRIPTION	GOVERNMENT IDENTIFICATION	INTERNAL IDENTIFICATION	FIND NO.
					* FIND NO. 093 NEVER USED *			
1		97942	158C209H01		BUS BAR			094
					* FIND NO. 095 - 096 NEVER USED *			
AR		97942	397R050		THERMAL GREASE, APPL OF			097
					* FIND NO. 098 NEVER USED *			
6		96906	MS51957-32		SCREW, PAN HD, (.138-32)	MS51957		099
12		80205	NAS620C6L		WASHER,FLAT NO.6			100
6		96906	MS35338-136		WASHER, LOCK-SPR, (.138)	MS35338		101
6		96906	MS35649-264		NUT,HEX. 6-32	MS35649		102
8		96906	MS35275-207		SCREW,FIL. HD	MS35275		103
16		80205	NAS620C2		WASHER,FLAT NO.2			104
8		96906	MS35338-134		WASHER,LOCK-SPRING	MS35338		105

G01 QTY REQD	U OF M	CAGE CODE	PART OR IDENTIFYING NO	SYM	NOMENCLATURE OR DESCRIPTION	GOVERNMENT IDENTIFICATION	INTERNAL IDENTIFICATION	FIND NO.
8		96906	MS35649-224		NUT,PLAIN,HEX	MS35649		106
4		96906	MS35275-218		SCREW FIL HD .112-40 X .62 LG	MS35275		107
4		96906	MS16995-11		SCREW, CAP, SCH, HEX, (.112-40)	MS16995		108
30		80205	NAS620C4		WASHER,FLAT			109
12		96906	MS35338-135		WASHER, LOCK-SPR, (.112)	MS35338		110
12		96906	MS35649-244		NUT, PLAIN, HEX, .112-40	MS35649		111
				*	FIND NO. 112 - 117 NEVER USED *			
12		96906	MS51957-16		SCREW, PAN HD, (.112-40)	MS51957		118
AR		97942	80040XG/A		LOCKING-SEALING COMPOUND, APPLICATION OF		PS80040XG	119
6		80205	NAS1723-4-9		EYELET			120

G01 QTY REQD	U OF M	CAGE CODE	PART OR IDENTIFYING NO	SYM	NOMENCLATURE OR DESCRIPTION	GOVERNMENT IDENTIFICATION	INTERNAL IDENTIFICATION	FIND NO.
1		97942	1A27497G01		FLEX LIST, CABLE C			121
REF		97942	1A29216		RL ONLY			122
				*	FIND NO. 123 NEVER USED *			
AR			(53320UC)	H,B	SEALANT,THREAD LOCKING	MIL-S-46163, TYPE II,GR N		124
				*	FIND NO. 125 - 130 NEVER USED *			
3		97942	1A20358H01	V	TERMINAL BOARD TB1-TB3			131
		97942	(1A20358H02)	ALT				
				*	FIND NO. 132 - 134 NEVER USED *			
5		81349	M83734/03-031		SOCKET, PLUG-IN, 14 PIN DIP XU1,XU3-XU5,XU9	MIL-S-83734/3		135
4		81349	M83734/04-031		SOCKET, ELECTRICAL XU2,XU6-XU8	MIL-S-83734/4		136
2		97942	1A20453G04	V	THREADLOCK ASSEMBLY, MEDIUM FIXED FEMALE JACKSCREW SET			137

G01 QTY REQD	U OF M	CAGE CODE	PART OR IDENTIFYING NO	SYM	NOMENCLATURE OR DESCRIPTION	GOVERNMENT IDENTIFICATION	INTERNAL IDENTIFICATION	FIND NO.
1		97942	1A20453G05	V	THREADLOCK ASSEMBLY, MEDIUM FIXED MALE, JACKSCREW SET			138
1		81349	RLR05C3301GS		RESISTOR, FIXED R43	MIL-R-39017/5		139
4		96906	MS35275-217		SCREW,FIL. 4-40	MS35275		140
1		81349	CCR07CG104GR		CAPACITOR, FIXED C12	MIL-C-20/37		141
4		97942	588R684H02	HS V	CAPACITOR C38-C41			142
3		81349	RLR05C2203GS		RESISTOR,FIXED FILM R149-R151	MIL-R-39017/5		143
2		81349	JANTX1N5550	E	DIODE CR21-CR22	MIL-S-19500/420		144
1		81349	RLR32C33R0GR		RESISTOR, FIXED R154	MIL-R-39017/3		145

G01 QTY REQD	U OF M	CAGE CODE	PART OR IDENTIFYING NO	SYM	NOMENCLATURE OR DESCRIPTION	GOVERNMENT IDENTIFICATION	INTERNAL IDENTIFICATION	FIND NO.
1		81349	M39016/6-116P		RELAY K1	MIL-R-39016/6		146
1		81349	RNC55H2212FS	E	RESISTOR, FIXED R81	MIL-R-55182/1		147
2		81349	RLR07C51R0GS		RESISTOR, FIXED 51 OHM R155-R156	MIL-R-39017/1		148
1		81349	RER65F2R67R		RESISTOR, FIXED R63	MIL-R-39009/1		149
1		81349	RER65F7R15R		RESISTOR, FIXED R157	MIL-R-39009/1		150

NOTE 1: PARENTHETIC IDENTITIES ARE FOR REFERENCE, EXCEPT THAT THEY MAY BE USED BY WESTINGHOUSE OR ITS SUBCONTRACTORS IN LIEU OF OTHER IDENTITIES SHOWN.

UNLESS OTHERWISE DOCUMENTED, THE SUPERSEDURE PARTS LIST, 97942-578R500, IS THE AUTHORITY FOR SUPERSEDURES, UNLESS OTHERWISE SPECIFIED ON CONTRACT, PROCUREMENT ORDER OR PROGRAM DIRECTIVE.

IDENTIFY PARTS DEFINED ON THIS PARTS LIST PER MIL-STD-130, UNLESS OTHERWISE SPECIFIED ON CONTRACT OR PROCURMENT ORDER.

PART OR IDENTIFYING NUMBERS CREATED FROM INTERNAL MATERIAL OR PROCESS SPECIFICATIONS MAY BE STRUCTURED ACCORDING TO 97942-581R515.

U OF M = UNIT OF MEASURE

```
            ALT      = ALTERNATE ITEM
            B        = BULK ITEM
            E        = SENSITIVE ELECTRONIC DEVICE
            HS       = HEAT SENSITIVE ITEM
            H        = HAZARDOUS MATERIAL
            T        = TEST SPECIFICATION
            V        = VENDOR ITEM - SEE CONTROL DRAWING
NOTE   2:   FOR FIND NO  073: CHANGED BY AUTHORITY OF 589R051 WHEN PL AT REV J.
NOTE   3:   FOR FIND NO  074: CHANGED BY AUTHORITY OF 589R051 WHEN PL AT REV J.
                          ***     END OF PARTS LIST AD421428            ***
                          ***     TOTAL NUMBER OF SHEETS = 16           ***
                          *** WISE:   05/03/96                          ***
                          *** RUN DATE: 05/03/96   RUN TIME: 16:58:13   ***
```

*** DRAFTING PARTS LIST ONLY *** NOT FOR RELEASE ***

DRAFTER	ENGRG	NORTHROP GRUMMAN CORPORATION BALTIMORE, MARYLAND 21203	CAGE CODE 18323	PARTS LIST NO. PLAD421429	ALL SHEETS REV: 02
CHECKED	SERIALIZED ASSEMBLY			SHEET 1	SIZE A
DFTG SUPV	SEE GRAPHIC FOR OTHER APPROVALS	CONTR NO. DTFA01-88-C-00037	TITLE: PREAMP ASSY		
		CUSTOMER	ORIGINAL DATE OF PL 96-05-02		

DEFINED ON THIS PARTS LIST

PART OR IDENTIFYING NO.	NOMENCLATURE OR DESCRIPTION	PART OR IDENTIFYING NO.	NOMENCLATURE OR DESCRIPTION
AD421429G01	PREAMP ASSY		

APPLICATION

NEXT ASSY	USED ON
AD421404	ARSR4 CATS

PARTS LIST
FOR CADO GRAPHIC
AD421429 REV

REVISIONS

REV	DESCRIPTION	DATE	APPROVED

G01 QTY REQD	U OF M	CAGE CODE	PART OR IDENTIFYING NO	SYM	NOMENCLATURE OR DESCRIPTION	GOVERNMENT IDENTIFICATION	INTERNAL IDENTIFICATION	FIND NO.
REF			6589A14		PREFERRED WIRE CABLE			001
1		97942	612J853G01		CHASSIS,RIGHT			002
1			DD421429H01		PLATE			003
1		97942	645A935H04	V	CONNECTOR, DSUB, MIXED CONTACTS J3			004
			DBM24W7P	ALT				
1		81349	M24308/28-3F		CON, PLUG, D-SUB P2	MIL-C-24308/28		005
1		81349	M24308/27-3F		CONNECTOR A3P1	MIL-C-24308/27		006
2		81349	M24308/2-3F		CONNECTOR, RECT, MIN, RECEPTACLE, 25 SOCKET A3P2, A3P3	MIL-C-24308/2		007
1			AD421428G01		REGULATOR BD ASSY A3			008
1			AD421427G01		CLASS C AMPLIFIER ASSY A2			009

G01 QTY REQD	U OF M	CAGE CODE	PART OR IDENTIFYING NO	SYM	NOMENCLATURE OR DESCRIPTION	GOVERNMENT IDENTIFICATION	INTERNAL IDENTIFICATION	FIND NO.
1			AD421426G01		CLASS A AMPLIFIER BD ASSY A1			010
1		97942	1A20453G11	V	THREADLOCK ASSEMBLY, SHORT MALE ROTATING JACKSCREW SET			011
3		97942 71468	645A936H05 DM53744-6	V ALT	CONTACT,PIN AWG 12/14			012
18		81349	M15733/43-0002		FILTER, FEEDTHROUGH FL1-FL13,FL27-FL31	MIL-F-15733/43		013
2		97942	1A21023H01	V	FILTER, HIGH POWER FL26			014
2		97942	1A20453G23	V	THREADLOCK ASSY, SHRT MALE ROTAT JACKSCREW W/ RND KNOB			015
1		97942	152C143H01	V	SMA CONNECTOR JACK J1			016
4		97942 71468	645A936H06 DM53744-7	V ALT	CONTACT,PIN AWG 16/18			017

G01 QTY REQD	U OF M	CAGE CODE	PART OR IDENTIFYING NO	SYM	NOMENCLATURE OR DESCRIPTION	GOVERNMENT IDENTIFICATION	INTERNAL IDENTIFICATION	FIND NO.
				* FIND NO. 018 NEVER USED *				
1		97942	152C143H09	V	INSULATOR BEAD FOR SERIES SMA CONNECTOR ASSY			019
1		97942	152C143H16	V	CONTACT, CONNECTOR			020
				* FIND NO. 021 - 026 NEVER USED *				
16		96906	MS16995-18		SCREW, CAP, SCH, HEX, (.138-32)	MS16995		027
13		96906	MS51957-46		SCREW,PAN HD	MS51957		028
				* FIND NO. 029 NEVER USED *				
5		96906	MS35649-284		NUT,HEX	MS35649		030
				* FIND NO. 031 NEVER USED *				
36		80205	NAS620C6		WASHER			032
				* FIND NO. 033 - 035 NEVER USED *				

G01 QTY REQD	U OF M	CAGE CODE	PART OR IDENTIFYING NO	SYM	NOMENCLATURE OR DESCRIPTION	GOVERNMENT IDENTIFICATION	INTERNAL IDENTIFICATION	FIND NO.
36		96906	MS35338-136		WASHER, LOCK-SPR, (.138 DIA)	MS35338		036
13		96906	MS35338-137		WASHER, LOCK-SPR, (.164)	MS35338		037
				*	FIND NO. 038 - 042 NEVER USED *			
REF		97942	9QS01		MANUFACTURING SPEC			043
6		96906	MS24693-C28		SCREW,FL CSKH, 100 DEG	MS24693		044
86		96906	MS16995-9		SCREW, CAP, SCH	MS16995		045
4		96906	MS51957-4		SCREW,PAN HD	MS51957		046
99		80205	NAS620C4		WASHER,FLAT #4			047
4		80205	NAS620C2		WASHER-FLAT			048
95		96906	MS35338-135		WASHER, LOCK-SPR, (.112)	MS35338		049
4		96906	MS35338-134		WASHER,LOCK SPR	MS35338		050
4		96906	MS51957-28		SCREW,PAN HD	MS51957		051

G01 QTY REQD	U OF M	CAGE CODE	PART OR IDENTIFYING NO	SYM	NOMENCLATURE OR DESCRIPTION	GOVERNMENT IDENTIFICATION	INTERNAL IDENTIFICATION	FIND NO.
					* FIND NO. 052 NEVER USED *			
1		97942	645A826H13	V	CONNECTOER, ADAPTER, MALE/FEMALE, FILTERED DSUB, 25CNT CP2			053
1		97942	645A825H03	V	GASKET			054
					* FIND NO. 055 NEVER USED *			
AR		97942	83869NF/H/3		MARKING, RUBBER STAMP AND MACHINE, APPLICATION OF		PS83869NF	056
		97942	(83869NB/4)	ALT				
AR		97942	83869NS/A/2		MARKING, SILK SCREEN AND OFFSET PRINTNG, APPLICATION OF		PS83869NS	057
		97942	(83869NB/4)	ALT				
1		97942	3D59086G01		WIRING DIAGRAM PREAMP. ASSEMBLY, CABL			058
					* FIND NO. 059 - 060 NEVER USED *			

G01 QTY REQD	U OF M	CAGE CODE	PART OR IDENTIFYING NO	SYM	NOMENCLATURE OR DESCRIPTION	GOVERNMENT IDENTIFICATION	INTERNAL IDENTIFICATION	FIND NO.
REF		97942	1A29216		RL ONLY			061
AR		97942	80305JV		MICROWAVE MODULE, ASSEMBLY OF		PS80305JV	062
5		96906	MS51957-29		SCREW, PAN HD, (.138-32)	MS51957		063
10		97942	1A20453H01	V	JACKSCREW, SHORT FIXED FEMALE			064
				*	FIND NO. 065 NEVER USED *			
3		96906	MS51957-15		SCREW,PAN HD	MS51957		066
				*	FIND NO. 067 NEVER USED *			
18		88044	AN960C8		WASHER, FLAT, (.176 DIA)	AN960		068
1		81349	M24236/1-1265		THERMOSTATIC SWITCH S1	MIL-S-24236/1		069
7		96906	MS16995-17		SCREW, CAP, SCH, HEX, (.138-32)	MS16995		070

G01 QTY REQD	U OF M	CAGE CODE	PART OR IDENTIFYING NO	SYM	NOMENCLATURE OR DESCRIPTION	GOVERNMENT IDENTIFICATION	INTERNAL IDENTIFICATION	FIND NO.
4		96906	MS16995-16		SCREW,CAP,SCH	MS16995		071
				*	FIND NO. 072 NEVER USED *			
REF			SD421429		SCHEMATIC, PREAMPLIFIER			073
REF		97942	1A29211	T	TEST SPEC PREAMPLIFIER SEE NOTE 2			074
				*	FIND NO. 075 - 076 NEVER USED *			
1	IN		(13404HX00330022)		RIBBON, CNA, .003 X .020	MIL-G-45204		077
				*	FIND NO. 078 - 080 NEVER USED *			
1		97942	347C278H16	V	WASHER			081
				*	FIND NO. 082 - 083 NEVER USED *			
4		96906	MS16995-11		SCREW, CAP, SCH, HEX, (.112-40)	MS16995		084
1		97942	588R813H05	V	PLATE, RETAINING			085

NOTE 1: PARENTHETIC IDENTITIES ARE FOR REFERENCE, EXCEPT THAT THEY MAY BE USED BY NORTHROP GRUMMAN OR ITS SUBCONTRACTORS IN LIEU OF OTHER IDENTITIES SHOWN.

UNLESS OTHERWISE DOCUMENTED, THE SUPERSEDURE PARTS LIST, 97942-578R500, IS THE AUTHORITY FOR SUPERSEDURES, UNLESS OTHERWISE SPECIFIED ON CONTRACT, PROCUREMENT ORDER OR PROGRAM DIRECTIVE.

IDENTIFY PARTS DEFINED ON THIS PARTS LIST PER MIL-STD-130, UNLESS OTHERWISE SPECIFIED ON CONTRACT OR PROCUREMENT ORDER.

PART OR IDENTIFYING NUMBERS CREATED FROM INTERNAL MATERIAL OR PROCESS SPECIFICATIONS MAY BE STRUCTURED ACCORDING TO 97942-581R515.

U OF M = UNIT OF MEASURE
ALT = ALTERNATE ITEM
T = TEST SPECIFICATION
V = VENDOR ITEM - SEE CONTROL DRAWING

NOTE 2: FOR FIND NO 074: TEST TO PARA 5.3 ONLY

*** END OF PARTS LIST AD421429 ***
*** TOTAL NUMBER OF SHEETS = 9 ***
*** RUN DATE: 01/24/97 RUN TIME: 10:29:01 ***

*** DRAFTING PARTS LIST ONLY *** NOT FOR RELEASE ***

DRAFTER	ENGRG	NORTHROP GRUMMAN CORPORATION BALTIMORE, MARYLAND 21203	CAGE CODE 18323	PARTS LIST NO. PLAA421430	ALL SHEETS REV: 01
CHECKED	MFG			SHEET 1	SIZE A
DFTG SUPV	MGT	CONTR NO. DTFA01-88-C-00037 CUSTOMER	TITLE: COMPUTER ASSEMBLY		
			ORIGINAL DATE OF PL 96-05-03		

DEFINED ON THIS PARTS LIST

PART OR IDENTIFYING NO.	NOMENCLATURE OR DESCRIPTION	PART OR IDENTIFYING NO.	NOMENCLATURE OR DESCRIPTION
AA421430G01	COMPUTER ASSY		

APPLICATION

NEXT ASSY	USED ON
KA421400	ARSR4 CATS

PARTS LIST
FOR CADO GRAPHIC
AA421430 REV

REVISIONS

REV	DESCRIPTION	DATE	APPROVED

G01 QTY REQD	U OF M	CAGE CODE	PART OR IDENTIFYING NO	SYM	NOMENCLATURE OR DESCRIPTION	GOVERNMENT IDENTIFICATION	INTERNAL IDENTIFICATION	FIND NO.
1			65877AT		NO PART MASTER			001
1			6544403		NO PART MASTER			002
1			07H0653		NO PART MASTER			003
2			2X32-70T		NO PART MASTER			004
				*	FIND NO. 005 - 009 NEVER USED *			
1			AD421405G01		INTERFACE BOARD ASSY			010
1		18323	DT2819		COUNTER/TIMER BOARD			011
1		64667	776786-01		CCA, AT-GPIB/TNT			012
1		18323	3C509-TPO		NETWORK INTERFACE CARD			013
1			AA421787G02		CABLE ASSY COMPUTER INTERFACES, RIBBON			014
1			AA421787G01		CABLE ASSY COMPUTER INTERFACES, RIBBON			015

NOTE 1: PARENTHETIC IDENTITIES ARE FOR REFERENCE, EXCEPT THAT THEY MAY BE USED BY NORTHROP GRUMMAN OR ITS SUBCONTRACTORS IN LIEU OF OTHER IDENTITIES SHOWN.

UNLESS OTHERWISE DOCUMENTED, THE SUPERSEDURE PARTS LIST, 97942-578R500, IS THE AUTHORITY FOR SUPERSEDURES, UNLESS OTHERWISE SPECIFIED ON CONTRACT, PROCUREMENT ORDER OR PROGRAM DIRECTIVE.

IDENTIFY PARTS DEFINED ON THIS PARTS LIST PER MIL-STD-130, UNLESS OTHERWISE SPECIFIED ON CONTRACT OR PROCUREMENT ORDER.

PART OR IDENTIFYING NUMBERS CREATED FROM INTERNAL MATERIAL OR PROCESS SPECIFICATIONS MAY BE STRUCTURED ACCORDING TO 97942-581R515.

U OF M = UNIT OF MEASURE

*** END OF PARTS LIST AA421430 ***
*** TOTAL NUMBER OF SHEETS = 3 ***
*** RUN DATE: 12/04/97 RUN TIME: 14:46:54 ***

PARTS LIST

DRAFTER	ENGRG	NORTHROP GRUMMAN CORPORATION BALTIMORE, MARYLAND 21203	CAGE CODE 18323	PARTS LIST NO. PLAD421431	ALL SHEETS REV: -
CHECKED	MFG			SHEET 1	SIZE A
DFTG SUPV	MGT	CONTR NO. DTFA01-88-C-00037 CUSTOMER	TITLE: CABLE ASSEMBLY, LD LOW POWER		
			ORIGINAL DATE OF PL 95-04-19		

DEFINED ON THIS PARTS LIST

PART OR IDENTIFYING NO.	NOMENCLATURE OR DESCRIPTION	PART OR IDENTIFYING NO.	NOMENCLATURE OR DESCRIPTION
AD421431G01	CABLE ASSY, LOOKDOWN DRVR		

APPLICATION		REVISIONS			
NEXT ASSY	USED ON	REV	DESCRIPTION	DATE	APPROVED
KA420900	ARSR4 CATS	-	PL RELEASED		

PARTS LIST
FOR CADO GRAPHIC
AD421431 REV -

G01 QTY REQD	U OF M	CAGE CODE	PART OR IDENTIFYING NO	SYM	NOMENCLATURE OR DESCRIPTION	GOVERNMENT IDENTIFICATION	INTERNAL IDENTIFICATION	FIND NO.
1		71468	DL1-156P		CONNECTOR,PLUG P1			001
9		71468	030-2409-003		CONTACT,			002
1		71468	249-1950-000		JUNCTION SHELL			003
1		71468	204-0016-000		DL-HANDLE			004
1		81349	M24308/2-3F		CONNECTOR, RECT, MIN, RECEPTACLE, 25 SOCKET P3	MIL-C-24308/2		005
1		81349	M85049/48-2-3F		SHIELD,STRAIGHT	MIL-C-85049/48		006
				*	FIND NO. 007 NEVER USED *			
1		81349	RCR07G473JS		RESISTOR 47K-5-1/4 R1	MIL-R-39008/1		008
REF			6589A14		PREFERRED WIRE CABLE			009
1		09922	G6F14-92PNH		CONNECTOR, CIRC, STRAIGHT PLUG P2			010

G01 QTY REQD	U OF M	CAGE CODE	PART OR IDENTIFYING NO	SYM	NOMENCLATURE OR DESCRIPTION	GOVERNMENT IDENTIFICATION	INTERNAL IDENTIFICATION	FIND NO.
12			RM20M-12D28		CONTACT,PIN			011
1		71468	DDM24W7SA197		CONNECTOR, COMBO D SUB P4			012
3		71468	DM53744-7		CONTACT			013
1		81349	M85049/48-2-5F		SHIELD, STRAIGHT	MIL-C-85049/48		014

NOTE 1: PARENTHETIC IDENTITIES ARE FOR REFERENCE, EXCEPT THAT THEY MAY BE USED BY NORTHROP GRUMMAN OR ITS SUBCONTRACTORS IN LIEU OF OTHER IDENTITIES SHOWN.

UNLESS OTHERWISE DOCUMENTED, THE SUPERSEDURE PARTS LIST, 97942-578R500, IS THE AUTHORITY FOR SUPERSEDURES, UNLESS OTHERWISE SPECIFIED ON CONTRACT, PROCUREMENT ORDER OR PROGRAM DIRECTIVE.

IDENTIFY PARTS DEFINED ON THIS PARTS LIST PER MIL-STD-130, UNLESS OTHERWISE SPECIFIED ON CONTRACT OR PROCUREMENT ORDER.

PART OR IDENTIFYING NUMBERS CREATED FROM INTERNAL MATERIAL OR PROCESS SPECIFICATIONS MAY BE STRUCTURED ACCORDING TO 97942-581R515.

U OF M = UNIT OF MEASURE

```
***     END OF PARTS LIST AD421431          ***
***     TOTAL NUMBER OF SHEETS =  4         ***
*** RUN DATE: 07/25/97   RUN TIME: 11:15:12  ***
```

*** DRAFTING PARTS LIST ONLY *** NOT FOR RELEASE ***

DRAFTER	ENGRG	NORTHROP GRUMMAN CORPORATION BALTIMORE, MARYLAND 21203	CAGE CODE 18323	PARTS LIST NO. PLAD421432	ALL SHEETS REV: 01
CHECKED	SERIALIZED ASSEMBLY	CONTR NO. DTFA01-88-C-00037		SHEET 1	SIZE A
DFTG SUPV	SEE GRAPHIC FOR OTHER APPROVALS	CUSTOMER		TITLE: SIX-PORT ASSY	
				ORIGINAL DATE OF PL 96-04-30	

DEFINED ON THIS PARTS LIST

PART OR IDENTIFYING NO.	NOMENCLATURE OR DESCRIPTION	PART OR IDENTIFYING NO.	NOMENCLATURE OR DESCRIPTION
AD421432G01	SIX-PORT REFLECTOMETER ASSY		

APPLICATION		REVISIONS			
NEXT ASSY	USED ON	REV	DESCRIPTION	DATE	APPROVED
AD421401	ARSR4 CATS				

PARTS LIST
FOR CADO GRAPHIC
AD421432 REV

G01 QTY REQD	U OF M	CAGE CODE	PART OR IDENTIFYING NO	SYM	NOMENCLATURE OR DESCRIPTION	GOVERNMENT IDENTIFICATION	INTERNAL IDENTIFICATION	FIND NO.
1			AD421639G01		NO PART MASTER			001
1			AD421640G01		NO PART MASTER			002
1			AD421641G01		NO PART MASTER			003
1			DD421641H01		NO PART MASTER			004
1			AD421448G01		SUBSTRATE ASSY, SIX-PORT			005
2		93459	3010-100		STEP ATTENUATOR			006
2		26805	2084-0000-02		ADAPTER, COAXIAL, SMA, IN-LINE JACK TO JACK (M/A COM)			007
4			3082-2243-00		NO PART MASTER			008
				*	FIND NO. 009 - 010 NEVER USED *			
2		26805	2781-0000-00		ADAPTER			011
REF			954A136		CABLE ASSY			012

NOTE 1: PARENTHETIC IDENTITIES ARE FOR REFERENCE, EXCEPT THAT THEY MAY BE USED BY NORTHROP GRUMMAN OR ITS SUBCONTRACTORS IN LIEU OF OTHER IDENTITIES SHOWN.

UNLESS OTHERWISE DOCUMENTED, THE SUPERSEDURE PARTS LIST, 97942-578R500, IS THE AUTHORITY FOR SUPERSEDURES, UNLESS OTHERWISE SPECIFIED ON CONTRACT, PROCUREMENT ORDER OR PROGRAM DIRECTIVE.

IDENTIFY PARTS DEFINED ON THIS PARTS LIST PER MIL-STD-130, UNLESS OTHERWISE SPECIFIED ON CONTRACT OR PROCUREMENT ORDER.

PART OR IDENTIFYING NUMBERS CREATED FROM INTERNAL MATERIAL OR PROCESS SPECIFICATIONS MAY BE STRUCTURED ACCORDING TO 97942-581R515.

U OF M = UNIT OF MEASURE

*** END OF PARTS LIST AD421432 ***
*** TOTAL NUMBER OF SHEETS = 3 ***
*** RUN DATE: 10/25/96 RUN TIME: 16:09:23 ***

*** DRAFTING PARTS LIST ONLY *** NOT FOR RELEASE ***

DRAFTER	ENGRG	NORTHROP GRUMMAN CORPORATION BALTIMORE, MARYLAND 21203	CAGE CODE	PARTS LIST NO. PLAA421434	ALL SHEETS REV: 01
CHECKED	MFG			SHEET 1	SIZE A
DFTG SUPV	MGT	CONTR NO. DTFA01-88-C-00037 CUSTOMER	TITLE: COAXIAL CABLE ASSY		
			ORIGINAL DATE OF PL 00-00-00		

DEFINED ON THIS PARTS LIST

PART OR IDENTIFYING NO.	NOMENCLATURE OR DESCRIPTION	PART OR IDENTIFYING NO.	NOMENCLATURE OR DESCRIPTION

FOR PARTS DEFINED ON THIS PARTS LIST, SEE LAST PAGE

APPLICATION			REVISIONS			
NEXT ASSY	USED ON		REV	DESCRIPTION	DATE	APPROVED
KA421400	ARSR4 CATS	PARTS LIST FOR CADO GRAPHIC AA421434 REV				

G01 QTY REQD	U OF M	CAGE CODE	PART OR IDENTIFYING NO	SYM	NOMENCLATURE OR DESCRIPTION	GOVERNMENT IDENTIFICATION	INTERNAL IDENTIFICATION	FIND NO.
1		64023	WHU18-3636-048		COAX CABLE, SMA-SMA 48"			001

* FIND NO. 002 - 014 NOT REQUIRED IN THIS GROUP *

LAST SHEET OF G01

G02 QTY REQD	U OF M	CAGE CODE	PART OR IDENTIFYING NO	SYM	NOMENCLATURE OR DESCRIPTION	GOVERNMENT IDENTIFICATION	INTERNAL IDENTIFICATION	FIND NO.
					* FIND NO. 001 NOT REQUIRED IN THIS GROUP *			
1		64023	WHU18-3636-048		COAX CABLE, SMA-SMA 48"			002
					* FIND NO. 003 - 014 NOT REQUIRED IN THIS GROUP *			

LAST SHEET OF G02

G03 QTY REQD	U OF M	CAGE CODE	PART OR IDENTIFYING NO	SYM	NOMENCLATURE OR DESCRIPTION	GOVERNMENT IDENTIFICATION	INTERNAL IDENTIFICATION	FIND NO.
					* FIND NO. 001 - 002 NOT REQUIRED IN THIS GROUP *			
1		64023	WHU18-3636-048		COAX CABLE, SMA-SMA 48"			003
					* FIND NO. 004 - 014 NOT REQUIRED IN THIS GROUP *			

LAST SHEET OF G03

G04 QTY REQD	U OF M	CAGE CODE	PART OR IDENTIFYING NO	SYM	NOMENCLATURE OR DESCRIPTION	GOVERNMENT IDENTIFICATION	INTERNAL IDENTIFICATION	FIND NO.
					* FIND NO. 001 - 003 NOT REQUIRED IN THIS GROUP *			
1		64023	WHU18-3636-048		COAX CABLE, SMA-SMA 48"			004
					* FIND NO. 005 - 014 NOT REQUIRED IN THIS GROUP *			

LAST SHEET OF G04

G05 QTY REQD	U OF M	CAGE CODE	PART OR IDENTIFYING NO	SYM	NOMENCLATURE OR DESCRIPTION	GOVERNMENT IDENTIFICATION	INTERNAL IDENTIFICATION	FIND NO.
					* FIND NO. 001 - 004 NOT REQUIRED IN THIS GROUP *			
1		64023	WHU18-3636-048		COAX CABLE, SMA-SMA 48"			005
					* FIND NO. 006 - 014 NOT REQUIRED IN THIS GROUP *			

LAST SHEET OF G05

G06 QTY REQD	U OF M	CAGE CODE	PART OR IDENTIFYING NO	SYM	NOMENCLATURE OR DESCRIPTION	GOVERNMENT IDENTIFICATION	INTERNAL IDENTIFICATION	FIND NO.
					* FIND NO. 001 - 005 NOT REQUIRED IN THIS GROUP *			
1		64023	WHU18-3636-021		COAX CABLE, SMA-SMA 21"			006
					* FIND NO. 007 - 014 NOT REQUIRED IN THIS GROUP *			

LAST SHEET OF G06

G07 QTY REQD	U OF M	CAGE CODE	PART OR IDENTIFYING NO	SYM	NOMENCLATURE OR DESCRIPTION	GOVERNMENT IDENTIFICATION	INTERNAL IDENTIFICATION	FIND NO.
					* FIND NO. 001 - 006 NOT REQUIRED IN THIS GROUP *			
1		64023	WHU18-3636-036		COAX CABLE, SMA-SMA 36"			007
					* FIND NO. 008 - 014 NOT REQUIRED IN THIS GROUP *			

LAST SHEET OF G07

G08 QTY REQD	U OF M	CAGE CODE	PART OR IDENTIFYING NO	SYM	NOMENCLATURE OR DESCRIPTION	GOVERNMENT IDENTIFICATION	INTERNAL IDENTIFICATION	FIND NO.
					* FIND NO. 001 - 007 NOT REQUIRED IN THIS GROUP *			
1		0HRT9	TPS-2503-36-NPS		COAX CABLE, TNC-N 36"			008
					* FIND NO. 009 - 014 NOT REQUIRED IN THIS GROUP *			

LAST SHEET OF G08

G09 QTY REQD	U OF M	CAGE CODE	PART OR IDENTIFYING NO	SYM	NOMENCLATURE OR DESCRIPTION	GOVERNMENT IDENTIFICATION	INTERNAL IDENTIFICATION	FIND NO.
					* FIND NO. 001 - 008 NOT REQUIRED IN THIS GROUP *			
1		64023	WHU18-3030-030		COAX CABLE, TNC-TNC 30"			009
					* FIND NO. 010 - 014 NOT REQUIRED IN THIS GROUP *			

LAST SHEET OF G09

G10 QTY REQD	U OF M	CAGE CODE	PART OR IDENTIFYING NO	SYM	NOMENCLATURE OR DESCRIPTION	GOVERNMENT IDENTIFICATION	INTERNAL IDENTIFICATION	FIND NO.
					* FIND NO. 001 - 009 NOT REQUIRED IN THIS GROUP *			
1		0HRT9	TPS-2503-36-TPS		COAX CABLE, TNC-TNC 36"			010
					* FIND NO. 011 - 014 NOT REQUIRED IN THIS GROUP *			

LAST SHEET OF G10

G11 QTY REQD	U OF M	CAGE CODE	PART OR IDENTIFYING NO	SYM	NOMENCLATURE OR DESCRIPTION	GOVERNMENT IDENTIFICATION	INTERNAL IDENTIFICATION	FIND NO.
					* FIND NO. 001 - 010 NOT REQUIRED IN THIS GROUP *			
1		64023	WHU18-3036-024		COAX CABLE, TNC-SMA 24"			011
					* FIND NO. 012 - 014 NOT REQUIRED IN THIS GROUP *			

LAST SHEET OF G11

G12 QTY REQD	U OF M	CAGE CODE	PART OR IDENTIFYING NO	SYM	NOMENCLATURE OR DESCRIPTION	GOVERNMENT IDENTIFICATION	INTERNAL IDENTIFICATION	FIND NO.
					* FIND NO. 001 - 011 NOT REQUIRED IN THIS GROUP *			
1		64023	WHU18-1830-024		COAX CABLE, N-TNC 24"			012
					* FIND NO. 013 - 014 NOT REQUIRED IN THIS GROUP *			

LAST SHEET OF G12

G13 QTY REQD	U OF M	CAGE CODE	PART OR IDENTIFYING NO	SYM	NOMENCLATURE OR DESCRIPTION	GOVERNMENT IDENTIFICATION	INTERNAL IDENTIFICATION	FIND NO.
					* FIND NO. 001 - 012 NOT REQUIRED IN THIS GROUP *			
1		64023	WHU18-3036-048		COAX CABLE, TNC-SMA 48"			013
					* FIND NO. 014 NOT REQUIRED IN THIS GROUP *			

LAST SHEET OF G13

G14 QTY REQD	U OF M	CAGE CODE	PART OR IDENTIFYING NO	SYM	NOMENCLATURE OR DESCRIPTION	GOVERNMENT IDENTIFICATION	INTERNAL IDENTIFICATION	FIND NO.
					* FIND NO. 001 - 013 NOT REQUIRED IN THIS GROUP *			
1		64023	WHU18-3636-030		COAX CABLE, SMA-SMA 30" LAST SHEET OF G14			014

NOTE 1: PARENTHETIC IDENTITIES ARE FOR REFERENCE, EXCEPT THAT THEY MAY BE USED BY NORTHROP GRUMMAN OR ITS SUBCONTRACTORS IN LIEU OF OTHER IDENTITIES SHOWN.

UNLESS OTHERWISE DOCUMENTED, THE SUPERSEDURE PARTS LIST, 97942-578R500, IS THE AUTHORITY FOR SUPERSEDURES, UNLESS OTHERWISE SPECIFIED ON CONTRACT, PROCUREMENT ORDER OR PROGRAM DIRECTIVE.

IDENTIFY PARTS DEFINED ON THIS PARTS LIST PER MIL-STD-130, UNLESS OTHERWISE SPECIFIED ON CONTRACT OR PROCUREMENT ORDER.

PART OR IDENTIFYING NUMBERS CREATED FROM INTERNAL MATERIAL OR PROCESS SPECIFICATIONS MAY BE STRUCTURED ACCORDING TO 97942-581R515.

U OF M = UNIT OF MEASURE

AA421434G01	COAXIAL CABLE ASSY	AA421434G08	COAXIAL CABLE ASSY
AA421434G02	COAXIAL CABLE ASSY	AA421434G09	COAXIAL CABLE ASSY
AA421434G03	COAXIAL CABLE ASSY	AA421434G10	COAXIAL CABLE ASSY
AA421434G04	COAXIAL CABLE ASSY	AA421434G11	COAXIAL CABLE ASSY
AA421434G05	COAXIAL CABLE ASSY	AA421434G12	COAXIAL CABLE ASSY
AA421434G06	COAXIAL CABLE ASSY	AA421434G13	COAXIAL CABLE ASSY
AA421434G07	COAXIAL CABLE ASSY	AA421434G14	COAXIAL CABLE ASSY

*** END OF PARTS LIST AA421434 ***
*** TOTAL NUMBER OF SHEETS = 16 ***
*** RUN DATE: 03/18/97 RUN TIME: 09:51:14 ***

*** DRAFTING PARTS LIST ONLY *** NOT FOR RELEASE ***

DRAFTER	ENGRG	NORTHROP GRUMMAN CORPORATION BALTIMORE, MARYLAND 21203	CAGE CODE	PARTS LIST NO. PLAA421436	ALL SHEETS REV: 01
CHECKED	MFG			SHEET 1	SIZE A
DFTG SUPV	MGT	CONTR NO. DTFA01-88-C-00037 CUSTOMER	TITLE:	CABLE ASSEMBLY, POWER SUPPLY OUTPUT AND CONTROL	
			ORIGINAL DATE OF PL 97-02-12		

DEFINED ON THIS PARTS LIST

PART OR IDENTIFYING NO.	NOMENCLATURE OR DESCRIPTION	PART OR IDENTIFYING NO.	NOMENCLATURE OR DESCRIPTION
AA421436G01	CABLE ASSEMBLY, POWER		

APPLICATION			REVISIONS			
NEXT ASSY	USED ON		REV	DESCRIPTION	DATE	APPROVED
	ARSR4 CATS	PARTS LIST FOR CADO GRAPHIC AA421436 REV				

G01 QTY REQD	U OF M	CAGE CODE	PART OR IDENTIFYING NO	SYM	NOMENCLATURE OR DESCRIPTION	GOVERNMENT IDENTIFICATION	INTERNAL IDENTIFICATION	FIND NO.
1			M34208/2-3		NO PART MASTER			001
1		81349	M24308/4-3		CONNECTOR	MIL-C-24308/4		002
2			207345-1		NO PART MASTER			003
4			TLS8-6		NO PART MASTER			004
AR		18323	6589A14		PFD,WIRE CABLE & WIRING DVCS		6589A14	005

NOTE 1: PARENTHETIC IDENTITIES ARE FOR REFERENCE, EXCEPT THAT THEY MAY BE USED BY NORTHROP GRUMMAN OR ITS SUBCONTRACTORS IN LIEU OF OTHER IDENTITIES SHOWN.

UNLESS OTHERWISE DOCUMENTED, THE SUPERSEDURE PARTS LIST, 97942-578R500, IS THE AUTHORITY FOR SUPERSEDURES, UNLESS OTHERWISE SPECIFIED ON CONTRACT, PROCUREMENT ORDER OR PROGRAM DIRECTIVE.

IDENTIFY PARTS DEFINED ON THIS PARTS LIST PER MIL-STD-130, UNLESS OTHERWISE SPECIFIED ON CONTRACT OR PROCUREMENT ORDER.

PART OR IDENTIFYING NUMBERS CREATED FROM INTERNAL MATERIAL OR PROCESS SPECIFICATIONS MAY BE STRUCTURED ACCORDING TO 97942-581R515.

U OF M = UNIT OF MEASURE

*** END OF PARTS LIST AA421436 ***
*** TOTAL NUMBER OF SHEETS = 3 ***
*** RUN DATE: 02/12/97 RUN TIME: 17:09:46 ***

*** DRAFTING PARTS LIST ONLY *** NOT FOR RELEASE ***

DRAFTER	ENGRG	NORTHROP GRUMMAN CORPORATION BALTIMORE, MARYLAND 21203	CAGE CODE 18323	PARTS LIST NO. PLAD421437	ALL SHEETS REV: 03
CHECKED	MFG			SHEET 1	SIZE A
DFTG SUPV	MGT	CONTR NO. DTFA01-88-C-00037 CUSTOMER	TITLE: CABLE ASSY, D-SUB		
			ORIGINAL DATE OF PL 95-04-19		

DEFINED ON THIS PARTS LIST

PART OR IDENTIFYING NO.	NOMENCLATURE OR DESCRIPTION	PART OR IDENTIFYING NO.	NOMENCLATURE OR DESCRIPTION
AD421437G01	CABLE ASSY, D-SUB	AD421437G04	CABLE ASSY, D-SUB
AD421437G02	CABLE ASSY, D-SUB	AD421437G05	CABLE ASSY, D-SUB
AD421437G03	CABLE ASSY, D-SUB		

APPLICATION

NEXT ASSY	USED ON
	ARSR4 CATS

PARTS LIST
FOR CADO GRAPHIC
AD421437 REV

REVISIONS

REV	DESCRIPTION	DATE	APPROVED

G01 QTY REQD	U OF M	CAGE CODE	PART OR IDENTIFYING NO	SYM	NOMENCLATURE OR DESCRIPTION	GOVERNMENT IDENTIFICATION	INTERNAL IDENTIFICATION	FIND NO.
1		81349	M24308/2-14		CONNECTOR P1	MIL-C-24308/2		001
		00799	204518-2	ALT				
1		81349	M24308/4-14		CONNECTOR P2	MIL-C-24308/4		002
		00779	204519-2	ALT				
REF			6589A14		PREFERRED WIRE CABLE			003
2		00779	207473-1		BACKSHELL			004

* FIND NO. 005 - 007 NOT REQUIRED IN THIS GROUP *

LAST SHEET OF G01

G02 QTY REQD	U OF M	CAGE CODE	PART OR IDENTIFYING NO	SYM	NOMENCLATURE OR DESCRIPTION	GOVERNMENT IDENTIFICATION	INTERNAL IDENTIFICATION	FIND NO.
1		81349	M24308/2-14		CONNECTOR P1	MIL-C-24308/2		001
		00799	204518-2	ALT				
1		81349	M24308/4-14		CONNECTOR P2	MIL-C-24308/4		002
		00779	204519-2	ALT				
REF			6589A14		PREFERRED WIRE CABLE			003
2		00779	207473-1		BACKSHELL			004

* FIND NO. 005 - 007 NOT REQUIRED IN THIS GROUP *

LAST SHEET OF G02

G03 QTY REQD	U OF M	CAGE CODE	PART OR IDENTIFYING NO	SYM	NOMENCLATURE OR DESCRIPTION	GOVERNMENT IDENTIFICATION	INTERNAL IDENTIFICATION	FIND NO.
1		81349	M24308/4-4		CONNECTOR	MIL-C-24308/4		001
1		81349	M24308/2-3		CONNECTOR	MIL-C-24308/2		002
REF			6589A14		PFD,WIRE CABLE & WIRING DVCS		6589A14	003
1		00779	207473-1		BACKSHELL			004
1			207345-1		NO PART MASTER			005

* FIND NO. 006 - 007 NOT REQUIRED IN THIS GROUP *

LAST SHEET OF G03

G04 QTY REQD	U OF M	CAGE CODE	PART OR IDENTIFYING NO	SYM	NOMENCLATURE OR DESCRIPTION	GOVERNMENT IDENTIFICATION	INTERNAL IDENTIFICATION	FIND NO.
1		81349	M24308/4-3		CONNECTOR	MIL-C-24308/4		001
1		81349	M24308/2-3		CONNECTOR	MIL-C-24308/2		002
REF			6589A14		PFD,WIRE CABLE & WIRING DVCS		6589A14	003
2			207345-1		NO PART MASTER			004

* FIND NO. 005 - 007 NOT REQUIRED IN THIS GROUP *

LAST SHEET OF G04

G05 QTY REQD	U OF M	CAGE CODE	PART OR IDENTIFYING NO	SYM	NOMENCLATURE OR DESCRIPTION	GOVERNMENT IDENTIFICATION	INTERNAL IDENTIFICATION	FIND NO.
1			DDM24W7PK87		NO PART MASTER			001
1		71468	DDM24W7SA197		CONNECTOR, COMBO D SUB			002
REF			6589A14		PFD,WIRE CABLE & WIRING DVCS		6589A14	003
2		00779	207476-1		HOOD			004
				*	FIND NO. 005 NOT REQUIRED IN THIS GROUP *			
7			DM53745-7		NO PART MASTER			006
7		71468	DM53744-6		POWER CONTACTS			007

LAST SHEET OF G05

NOTE 1: PARENTHETIC IDENTITIES ARE FOR REFERENCE, EXCEPT THAT THEY MAY BE USED BY NORTHROP GRUMMAN OR ITS SUBCONTRACTORS IN LIEU OF OTHER IDENTITIES SHOWN.

UNLESS OTHERWISE DOCUMENTED, THE SUPERSEDURE PARTS LIST, 97942-578R500, IS THE AUTHORITY FOR SUPERSEDURES, UNLESS OTHERWISE SPECIFIED ON CONTRACT, PROCUREMENT ORDER OR PROGRAM DIRECTIVE.

IDENTIFY PARTS DEFINED ON THIS PARTS LIST PER MIL-STD-130, UNLESS OTHERWISE SPECIFIED ON CONTRACT OR PROCUREMENT ORDER.

PART OR IDENTIFYING NUMBERS CREATED FROM INTERNAL MATERIAL OR PROCESS SPECIFICATIONS MAY BE STRUCTURED ACCORDING TO 97942-581R515.

U OF M = UNIT OF MEASURE

ALT = ALTERNATE ITEM

*** END OF PARTS LIST AD421437 ***
*** TOTAL NUMBER OF SHEETS = 7 ***
*** RUN DATE: 01/29/97 RUN TIME: 16:42:25 ***

*** DRAFTING PARTS LIST ONLY *** NOT FOR RELEASE ***

DRAFTER	ENGRG	NORTHROP GRUMMAN CORPORATION BALTIMORE, MARYLAND 21203	CAGE CODE	PARTS LIST NO. PLAA421438	ALL SHEETS REV: 01
CHECKED	MFG			SHEET 1	SIZE A
DFTG SUPV	MGT	CONTR NO. DTFA01-88-C-00037	TITLE: CABLE ASSEMBLY, AC INPUT POWER		
		CUSTOMER	ORIGINAL DATE OF PL 97-02-12		

DEFINED ON THIS PARTS LIST

PART OR IDENTIFYING NO.	NOMENCLATURE OR DESCRIPTION	PART OR IDENTIFYING NO.	NOMENCLATURE OR DESCRIPTION
AA421438G01	CABLE ASSEMBLY, AC POWER		

APPLICATION

NEXT ASSY	USED ON
	ARSR4 CATS

PARTS LIST
FOR CADO GRAPHIC
AA421438 REV

REVISIONS

REV	DESCRIPTION	DATE	APPROVED

G01 QTY REQD	U OF M	CAGE CODE	PART OR IDENTIFYING NO	SYM	NOMENCLATURE OR DESCRIPTION	GOVERNMENT IDENTIFICATION	INTERNAL IDENTIFICATION	FIND NO.
1		96906	MS3456L24-10P		CONNECTOR	MS3456		001
3			FVL1210-5R2		NO PART MASTER			002
AR		18323	6589A14		PFD,WIRE CABLE & WIRING DVCS		6589A14	003

NOTE 1: PARENTHETIC IDENTITIES ARE FOR REFERENCE, EXCEPT THAT THEY MAY BE USED BY NORTHROP GRUMMAN OR ITS SUBCONTRACTORS IN LIEU OF OTHER IDENTITIES SHOWN.

UNLESS OTHERWISE DOCUMENTED, THE SUPERSEDURE PARTS LIST, 97942-578R500, IS THE AUTHORITY FOR SUPERSEDURES, UNLESS OTHERWISE SPECIFIED ON CONTRACT, PROCUREMENT ORDER OR PROGRAM DIRECTIVE.

IDENTIFY PARTS DEFINED ON THIS PARTS LIST PER MIL-STD-130, UNLESS OTHERWISE SPECIFIED ON CONTRACT OR PROCUREMENT ORDER.

PART OR IDENTIFYING NUMBERS CREATED FROM INTERNAL MATERIAL OR PROCESS SPECIFICATIONS MAY BE STRUCTURED ACCORDING TO 97942-581R515.

U OF M = UNIT OF MEASURE

```
***     END OF PARTS LIST AA421438            ***
***     TOTAL NUMBER OF SHEETS =  3           ***
*** RUN DATE: 02/12/97   RUN TIME: 17:10:01    ***
```

*** DRAFTING PARTS LIST ONLY *** NOT FOR RELEASE ***

DRAFTER	ENGRG	NORTHROP GRUMMAN CORPORATION BALTIMORE, MARYLAND 21203	CAGE CODE	PARTS LIST NO. PLAA421439	ALL SHEETS REV: 01
CHECKED	MFG			SHEET 1	SIZE A
DFTG SUPV	MGT	CONTR NO. DTFA01-88-C-00037	TITLE: CABLE ASSEMBLY CONTROL PANEL TO DMM		
		CUSTOMER	ORIGINAL DATE OF PL 97-01-23		

DEFINED ON THIS PARTS LIST

PART OR IDENTIFYING NO.	NOMENCLATURE OR DESCRIPTION	PART OR IDENTIFYING NO.	NOMENCLATURE OR DESCRIPTION
AA421439G01	CABLE ASSEMBLY CONTROL		

APPLICATION

NEXT ASSY	USED ON
	ARSR4 CATS

PARTS LIST
FOR CADO GRAPHIC
AA421439 REV

REVISIONS

REV	DESCRIPTION	DATE	APPROVED

G01 QTY REQD	U OF M	CAGE CODE	PART OR IDENTIFYING NO	SYM	NOMENCLATURE OR DESCRIPTION	GOVERNMENT IDENTIFICATION	INTERNAL IDENTIFICATION	FIND NO.
1		09922	G6F18-22PNH		CONNECTOR, CIRC, STRAIGHT PLUG			001
21		09922	RM16M-23D28		CONTACT,PIN			002
REF		18323	6589A14		PFD,WIRE CABLE & WIRING DVCS		6589A14	003

NOTE 1: PARENTHETIC IDENTITIES ARE FOR REFERENCE, EXCEPT THAT THEY MAY BE USED BY NORTHROP GRUMMAN OR ITS SUBCONTRACTORS IN LIEU OF OTHER IDENTITIES SHOWN.

UNLESS OTHERWISE DOCUMENTED, THE SUPERSEDURE PARTS LIST, 97942-578R500, IS THE AUTHORITY FOR SUPERSEDURES, UNLESS OTHERWISE SPECIFIED ON CONTRACT, PROCUREMENT ORDER OR PROGRAM DIRECTIVE.

IDENTIFY PARTS DEFINED ON THIS PARTS LIST PER MIL-STD-130, UNLESS OTHERWISE SPECIFIED ON CONTRACT OR PROCUREMENT ORDER.

PART OR IDENTIFYING NUMBERS CREATED FROM INTERNAL MATERIAL OR PROCESS SPECIFICATIONS MAY BE STRUCTURED ACCORDING TO 97942-581R515.

U OF M = UNIT OF MEASURE

```
***     END OF PARTS LIST AA421439            ***
***     TOTAL NUMBER OF SHEETS =  3           ***
*** RUN DATE: 01/23/97   RUN TIME: 14:41:03    ***
```

*** DRAFTING PARTS LIST ONLY *** NOT FOR RELEASE ***

DRAFTER	ENGRG	NORTHROP GRUMMAN CORPORATION BALTIMORE, MARYLAND 21203	CAGE CODE 18323	PARTS LIST NO. PLAD421448	ALL SHEETS REV: 01
CHECKED	MFG			SHEET 1	SIZE A
		CONTR NO. DTFA01-88-C-00037	TITLE: SUBSTRATE ASSY, SIX-PORT		
DFTG SUPV	MGT				
		CUSTOMER	ORIGINAL DATE OF PL 96-04-30		

DEFINED ON THIS PARTS LIST

PART OR IDENTIFYING NO.	NOMENCLATURE OR DESCRIPTION	PART OR IDENTIFYING NO.	NOMENCLATURE OR DESCRIPTION
AD421448G01	SUBSTRATE ASSY, SIX-PORT		

APPLICATION		REVISIONS			
NEXT ASSY	USED ON	REV	DESCRIPTION	DATE	APPROVED
AD421432	LLRF T/S				

PARTS LIST
FOR CADO GRAPHIC
AD421448 REV

G01 QTY REQD	U OF M	CAGE CODE	PART OR IDENTIFYING NO	SYM	NOMENCLATURE OR DESCRIPTION	GOVERNMENT IDENTIFICATION	INTERNAL IDENTIFICATION	FIND NO.
6		26805	2052-5636-02		CONNECTOR, SMA			001
REF			954A146		FASTENER STANDARDS			002
1			DD421448H01		SUBSTRATE, SIX PORT			003
				*	FIND NO. 004 NEVER USED *			
4		31597	1B0265-3		HYBRID COUPLER			005
1		97942	584R014J54	V	RESISTOR, FIXED			006
3		97942	584R014J47	V	RESISTOR, FIXED			007

NOTE 1: PARENTHETIC IDENTITIES ARE FOR REFERENCE, EXCEPT THAT THEY MAY BE USED BY NORTHROP GRUMMAN OR ITS SUBCONTRACTORS IN LIEU OF OTHER IDENTITIES SHOWN.

UNLESS OTHERWISE DOCUMENTED, THE SUPERSEDURE PARTS LIST, 97942-578R500, IS THE AUTHORITY FOR SUPERSEDURES, UNLESS OTHERWISE SPECIFIED ON CONTRACT, PROCUREMENT ORDER OR PROGRAM DIRECTIVE.

IDENTIFY PARTS DEFINED ON THIS PARTS LIST PER MIL-STD-130, UNLESS OTHERWISE SPECIFIED ON CONTRACT OR PROCUREMENT ORDER.

PART OR IDENTIFYING NUMBERS CREATED FROM INTERNAL MATERIAL OR PROCESS SPECIFICATIONS MAY BE STRUCTURED ACCORDING TO 97942-581R515.

U OF M = UNIT OF MEASURE

V = VENDOR ITEM - SEE CONTROL DRAWING

*** END OF PARTS LIST AD421448 ***

*** TOTAL NUMBER OF SHEETS = 3 ***

*** RUN DATE: 09/23/96 RUN TIME: 13:56:32 ***

*** DRAFTING PARTS LIST ONLY *** NOT FOR RELEASE ***

DRAFTER	ENGRG	NORTHROP GRUMMAN CORPORATION BALTIMORE, MARYLAND 21203	CAGE CODE 18323	PARTS LIST NO. PLAA421645	ALL SHEETS REV: 01
CHECKED	MFG			SHEET 1	SIZE A
DFTG SUPV	MGT	CONTR NO. DTFA01-88-C-00037 CUSTOMER	TITLE: PHASE REFERENCE ASSY		
			ORIGINAL DATE OF PL 96-11-08		

DEFINED ON THIS PARTS LIST

PART OR IDENTIFYING NO.	NOMENCLATURE OR DESCRIPTION	PART OR IDENTIFYING NO.	NOMENCLATURE OR DESCRIPTION
AA421645G01	PHASE REFERENCE ASSY		

APPLICATION

NEXT ASSY	USED ON
KA421400	ARSR4 CATS

PARTS LIST
FOR CADO GRAPHIC
AA421645 REV

REVISIONS

REV	DESCRIPTION	DATE	APPROVED

G01 QTY REQD	U OF M	CAGE CODE	PART OR IDENTIFYING NO	SYM	NOMENCLATURE OR DESCRIPTION	GOVERNMENT IDENTIFICATION	INTERNAL IDENTIFICATION	FIND NO.
1			DA421645H01		PHASE REFERENCE SUBSTRATE			001
1		97942	158C201H01		PRINTED WIRING BOARD			002
1		97942	158C202H01		PRINTED WIRING BOARD			003
3		96906	MS35338-135		WASHER, LOCK-SPR, (.112)	MS35338		004
3		80205	NAS620C4		WASHER,FLAT, (.115 DIA)			005
3		96906	MS16995-9		SCREW, CAP, SCH	MS16995		006
4		96906	MS35338-134		WASHER,LOCK SPR	MS35338		007
4		80205	NAS620C2		WASHER,FLAT			008
4		96906	MS16995-3		SCREW, CAP, SOCKET HEAD-HEX, (.086-56)	MS16995		009
2		97942	1A20212H02	V	RESISTOR,FIXED,FILM, CHIP,HIGH POWER R2-R3			010

G01 QTY REQD	U OF M	CAGE CODE	PART OR IDENTIFYING NO	SYM	NOMENCLATURE OR DESCRIPTION	GOVERNMENT IDENTIFICATION	INTERNAL IDENTIFICATION	FIND NO.
1		97942	1A20212H21	V	RESISTOR,FIXED,FILM, CHIP,HIGH POWER R1			011
4	IN		(13404HX00330022)		RIBBON, CNA, .003 X .020 MIL-G-45204			012

NOTE 1: PARENTHETIC IDENTITIES ARE FOR REFERENCE, EXCEPT THAT THEY MAY BE USED BY NORTHROP GRUMMAN OR ITS SUBCONTRACTORS IN LIEU OF OTHER IDENTITIES SHOWN.

UNLESS OTHERWISE DOCUMENTED, THE SUPERSEDURE PARTS LIST, 97942-578R500, IS THE AUTHORITY FOR SUPERSEDURES, UNLESS OTHERWISE SPECIFIED ON CONTRACT, PROCUREMENT ORDER OR PROGRAM DIRECTIVE.

IDENTIFY PARTS DEFINED ON THIS PARTS LIST PER MIL-STD-130, UNLESS OTHERWISE SPECIFIED ON CONTRACT OR PROCUREMENT ORDER.

PART OR IDENTIFYING NUMBERS CREATED FROM INTERNAL MATERIAL OR PROCESS SPECIFICATIONS MAY BE STRUCTURED ACCORDING TO 97942-581R515.

U OF M = UNIT OF MEASURE
V = VENDOR ITEM - SEE CONTROL DRAWING

```
***     END OF PARTS LIST AA421645          ***
***     TOTAL NUMBER OF SHEETS =  4         ***
*** RUN DATE: 05/07/97   RUN TIME: 14:05:17  ***
```

*** DRAFTING PARTS LIST ONLY *** NOT FOR RELEASE ***

DRAFTER	ENGRG	NORTHROP GRUMMAN CORPORATION BALTIMORE, MARYLAND 21203	CAGE CODE 18323	PARTS LIST NO. PLAA421646	ALL SHEETS REV: 01
CHECKED	MFG			SHEET 1	SIZE A
DFTG SUPV	MGT	CONTR NO. DTFA01-88-C-00037 CUSTOMER	TITLE: 4-WAY INPUT TRANSISTION ASSY		
			ORIGINAL DATE OF PL 96-11-08		

DEFINED ON THIS PARTS LIST

PART OR IDENTIFYING NO.	NOMENCLATURE OR DESCRIPTION	PART OR IDENTIFYING NO.	NOMENCLATURE OR DESCRIPTION
AA421646G01	4 WAY INPUT TRANSISTION		

APPLICATION

NEXT ASSY	USED ON
KA421400	ARSR4 CATS

PARTS LIST FOR CADO GRAPHIC AA421646 REV

REVISIONS

REV	DESCRIPTION	DATE	APPROVED

G01

QTY REQD	U OF M	CAGE CODE	PART OR IDENTIFYING NO	SYM	NOMENCLATURE OR DESCRIPTION	GOVERNMENT IDENTIFICATION	INTERNAL IDENTIFICATION	FIND NO.
1			DA421646H01		4-WAY INPUT SUBSTRATE			001
1		97942	158C202H01		PRINTED WIRING BOARD			002
4		24602	6541		CONNECTOR J1-J4			003
4	IN		(13404HX00330022)		RIBBON, CNA, .003 X .020 MIL-G-45204			004
REF			954A146		FASTENER STANDARDS			005
4		24602	6400-48-0		PIN			006

NOTE 1: PARENTHETIC IDENTITIES ARE FOR REFERENCE, EXCEPT THAT THEY MAY BE USED BY NORTHROP GRUMMAN OR ITS SUBCONTRACTORS IN LIEU OF OTHER IDENTITIES SHOWN.

UNLESS OTHERWISE DOCUMENTED, THE SUPERSEDURE PARTS LIST, 97942-578R500, IS THE AUTHORITY FOR SUPERSEDURES, UNLESS OTHERWISE SPECIFIED ON CONTRACT, PROCUREMENT ORDER OR PROGRAM DIRECTIVE.

IDENTIFY PARTS DEFINED ON THIS PARTS LIST PER MIL-STD-130, UNLESS OTHERWISE SPECIFIED ON CONTRACT OR PROCUREMENT ORDER.

PART OR IDENTIFYING NUMBERS CREATED FROM INTERNAL MATERIAL OR PROCESS SPECIFICATIONS MAY BE STRUCTURED ACCORDING TO 97942-581R515.

U OF M = UNIT OF MEASURE

*** END OF PARTS LIST AA421646 ***
*** TOTAL NUMBER OF SHEETS = 3 ***
*** RUN DATE: 09/19/97 RUN TIME: 16:30:08 ***

*** DRAFTING PARTS LIST ONLY *** NOT FOR RELEASE ***

DRAFTER	ENGRG	NORTHROP GRUMMAN CORPORATION BALTIMORE, MARYLAND 21203	CAGE CODE 18323	PARTS LIST NO. PLAA421647	ALL SHEETS REV: 01
CHECKED	MFG			SHEET 1	SIZE A
DFTG SUPV	MGT	CONTR NO. DTFA01-88-C-00037	TITLE: 4-WAY OUTPUT TRANSISTION ASSY		
		CUSTOMER	ORIGINAL DATE OF PL 96-11-08		

DEFINED ON THIS PARTS LIST

PART OR IDENTIFYING NO.	NOMENCLATURE OR DESCRIPTION	PART OR IDENTIFYING NO.	NOMENCLATURE OR DESCRIPTION
AA421647G01	4-WAY OUTPUT TRANSISTION		

APPLICATION		REVISIONS			
NEXT ASSY	USED ON	REV	DESCRIPTION	DATE	APPROVED
KA421400	ARSR4 CATS				

PARTS LIST
FOR CADO GRAPHIC
AA421647 REV

G01 QTY REQD	U OF M	CAGE CODE	PART OR IDENTIFYING NO	SYM	NOMENCLATURE OR DESCRIPTION	GOVERNMENT IDENTIFICATION	INTERNAL IDENTIFICATION	FIND NO.
1			DA421647H01		4-WAY OUTPUT SUBSTRATE			001
4		97942	1A20897H06	V	CONTACT,SPRINGFINGER			002
4		16179	2052-1618-02		CONNECTOR			003
REF			954A146		FASTENER STANDARDS			004

NOTE 1: PARENTHETIC IDENTITIES ARE FOR REFERENCE, EXCEPT THAT THEY MAY BE USED BY NORTHROP GRUMMAN OR ITS SUBCONTRACTORS IN LIEU OF OTHER IDENTITIES SHOWN.

UNLESS OTHERWISE DOCUMENTED, THE SUPERSEDURE PARTS LIST, 97942-578R500, IS THE AUTHORITY FOR SUPERSEDURES, UNLESS OTHERWISE SPECIFIED ON CONTRACT, PROCUREMENT ORDER OR PROGRAM DIRECTIVE.

IDENTIFY PARTS DEFINED ON THIS PARTS LIST PER MIL-STD-130, UNLESS OTHERWISE SPECIFIED ON CONTRACT OR PROCUREMENT ORDER.

PART OR IDENTIFYING NUMBERS CREATED FROM INTERNAL MATERIAL OR PROCESS SPECIFICATIONS MAY BE STRUCTURED ACCORDING TO 97942-581R515.

U OF M = UNIT OF MEASURE
V = VENDOR ITEM - SEE CONTROL DRAWING

*** END OF PARTS LIST AA421647 ***
*** TOTAL NUMBER OF SHEETS = 3 ***
*** RUN DATE: 05/07/97 RUN TIME: 14:06:45 ***

*** DRAFTING PARTS LIST ONLY *** NOT FOR RELEASE ***

DRAFTER	ENGRG	NORTHROP GRUMMAN CORPORATION BALTIMORE, MARYLAND 21203	CAGE CODE 18323	PARTS LIST NO. PLAA421785	ALL SHEETS REV: 01
CHECKED	MFG			SHEET 1	SIZE A
DFTG SUPV	MGT	CONTR NO. DTFA01-88-C-00037	TITLE: ADAPTER ASSY, SELF TEST		
		CUSTOMER	ORIGINAL DATE OF PL 97-01-16		

DEFINED ON THIS PARTS LIST

PART OR IDENTIFYING NO.	NOMENCLATURE OR DESCRIPTION	PART OR IDENTIFYING NO.	NOMENCLATURE OR DESCRIPTION
AA421785G01	ADAPTER ASSEMBLY, SELF TEST		

APPLICATION		REVISIONS			
NEXT ASSY	USED ON	REV	DESCRIPTION	DATE	APPROVED
KA421400	ARSR4 CATS				

PARTS LIST
FOR CADO GRAPHIC
AA421785 REV

G01 QTY REQD	U OF M	CAGE CODE	PART OR IDENTIFYING NO	SYM	NOMENCLATURE OR DESCRIPTION	GOVERNMENT IDENTIFICATION	INTERNAL IDENTIFICATION	FIND NO.
1		50541	LPMY15-0089		CONNECTOR, HYPERTRONICS P1			001
1		81073	51D30-01-2-AJN		KNOB S1			002
1		95146	KPN-500B-1/8		ROTARY SWITCH			003
REF			6589A14		PREFERRED WIRE CABLE			004

NOTE 1: PARENTHETIC IDENTITIES ARE FOR REFERENCE, EXCEPT THAT THEY MAY BE USED BY NORTHROP GRUMMAN OR ITS SUBCONTRACTORS IN LIEU OF OTHER IDENTITIES SHOWN.

UNLESS OTHERWISE DOCUMENTED, THE SUPERSEDURE PARTS LIST, 97942-578R500, IS THE AUTHORITY FOR SUPERSEDURES, UNLESS OTHERWISE SPECIFIED ON CONTRACT, PROCUREMENT ORDER OR PROGRAM DIRECTIVE.

IDENTIFY PARTS DEFINED ON THIS PARTS LIST PER MIL-STD-130, UNLESS OTHERWISE SPECIFIED ON CONTRACT OR PROCUREMENT ORDER.

PART OR IDENTIFYING NUMBERS CREATED FROM INTERNAL MATERIAL OR PROCESS SPECIFICATIONS MAY BE STRUCTURED ACCORDING TO 97942-581R515.

U OF M = UNIT OF MEASURE

```
***     END OF PARTS LIST AA421785            ***
***     TOTAL NUMBER OF SHEETS =  3           ***
*** RUN DATE: 01/21/97   RUN TIME: 14:42:42   ***
```

*** DRAFTING PARTS LIST ONLY *** NOT FOR RELEASE ***

DRAFTER	ENGRG	NORTHROP GRUMMAN CORPORATION BALTIMORE, MARYLAND 21203	CAGE CODE	PARTS LIST NO. PLAA421787	ALL SHEETS REV: 01
CHECKED	MFG			SHEET 1	SIZE A
DFTG SUPV	MGT	CONTR NO. DTFA01-88-C-00037 CUSTOMER	TITLE:	CABLE ASSY COMPUTER INTERFACES, RIBBON	
			ORIGINAL DATE OF PL	97-02-04	

DEFINED ON THIS PARTS LIST

PART OR IDENTIFYING NO.	NOMENCLATURE OR DESCRIPTION	PART OR IDENTIFYING NO.	NOMENCLATURE OR DESCRIPTION
AA421787G01	CABLE ASSY COMPUTER		
AA421787G02	CABLE ASSY COMPUTER		

APPLICATION		REVISIONS			
NEXT ASSY	USED ON	REV	DESCRIPTION	DATE	APPROVED
	ARSR4 CATS				

PARTS LIST
FOR CADO GRAPHIC
AA421787 REV

G01 QTY REQD	U OF M	CAGE CODE	PART OR IDENTIFYING NO	SYM	NOMENCLATURE OR DESCRIPTION	GOVERNMENT IDENTIFICATION	INTERNAL IDENTIFICATION	FIND NO.
1		22526	66900-250		CONNECTOR, RIBBON 50 PIN			001
1		22526	66900-250		CONNECTOR, RIBBON 50 PIN			002
AR		16428	9R28050		CABLE,RIBBON,FLAT, 50 COND., PVC			003

LAST SHEET OF G01

G02 QTY REQD	U OF M	CAGE CODE	PART OR IDENTIFYING NO	SYM	NOMENCLATURE OR DESCRIPTION	GOVERNMENT IDENTIFICATION	INTERNAL IDENTIFICATION	FIND NO.
1		59610	40-8409S		CONNECTOR, RIBBON FEMALE 9 PIN			001
1			66900-210		NO PART MASTER			002
AR		16428	9R28010		CABLE, 6 COND RIBBON			003

LAST SHEET OF G02

NOTE 1: PARENTHETIC IDENTITIES ARE FOR REFERENCE, EXCEPT THAT THEY MAY BE USED BY NORTHROP GRUMMAN OR ITS SUBCONTRACTORS IN LIEU OF OTHER IDENTITIES SHOWN.

UNLESS OTHERWISE DOCUMENTED, THE SUPERSEDURE PARTS LIST, 97942-578R500, IS THE AUTHORITY FOR SUPERSEDURES, UNLESS OTHERWISE SPECIFIED ON CONTRACT, PROCUREMENT ORDER OR PROGRAM DIRECTIVE.

IDENTIFY PARTS DEFINED ON THIS PARTS LIST PER MIL-STD-130, UNLESS OTHERWISE SPECIFIED ON CONTRACT OR PROCUREMENT ORDER.

PART OR IDENTIFYING NUMBERS CREATED FROM INTERNAL MATERIAL OR PROCESS SPECIFICATIONS MAY BE STRUCTURED ACCORDING TO 97942-581R515.

U OF M = UNIT OF MEASURE

```
***     END OF PARTS LIST AA421787          ***
***     TOTAL NUMBER OF SHEETS =  4         ***
*** RUN DATE: 02/04/97   RUN TIME: 12:11:06  ***
```

SH 1	PARENTHETIC IDENTITIES ARE FOR REFERENCE ONLY REVISION STATUS OF ALL SHEETS IS IDENTICAL		REVISIONS			
DWG NO.			REV	DESCRIPTION	DATE	APPROVED
			01	PRE-BASELINE RELEASE	12-MAY-97	
			02	CHANGED SIZE OF SUBSTRATE, ADDED NOTE 2	16-MAY-97	
	APPLICATION					
	NEXT ASSY	USED ON				
	SEE P/L	SEE P/L				

AA421413

SEE SEPARATE PARTS LIST

APPROVED			
DRAFTER / ORIG J. Kneale	ENGINEER	COMPUTER GENERATED DOCUMENT MANUAL CHANGES NOT PERMITTED	INTERPRET DRAWING IAW DOD-STD-100
CHECKER	PRGM ENGRG	INTERPRET DIMENSIONS AND TOLERANCES IAW ANSI Y14.5M - 1982	UNLESS OTHERWISE SPECIFIED DIMENSIONS ARE IN INCHES
DFTG SUPV	MFG	CONTRACT NO. — DTFA01-88-C-00037-ILS	
RELBL	ELEC SENS DVC	ORIGINAL DATE — 12-MAY-97	
MAINT /SYS SAF	PARTS ENGRG	NORTHROP GRUMMAN CORPORATION BALTIMORE, MARYLAND 21203 USA	
SAFETY	EMI/EMC/TEMPEST	**INPUT TRANSITION ASSEMBLY** POWER AMP MODULE TEST SET	
CUSTOMER	ELEC EN	SIZE: A	CAGE CODE: 18323 / DRAWING NUMBER: AA421413 / REV: 01
		SCALE: NONE	SHEET 1 OF 2

N:\SSE\PAMTS\DWG\DA421413.DOC

1 ASSURE CENTER CONTACT OF ITEM 2 DOES NOT CONTACT SUBSTRATE BASE

2 SOLDER ITEMS 2, 3, AND 5 TO 1 APPROXIMATELY AS SHOWN

3 FLOW SOLDER OVER COPPER IN AREA OF LOWER .180 DIA HOLE.

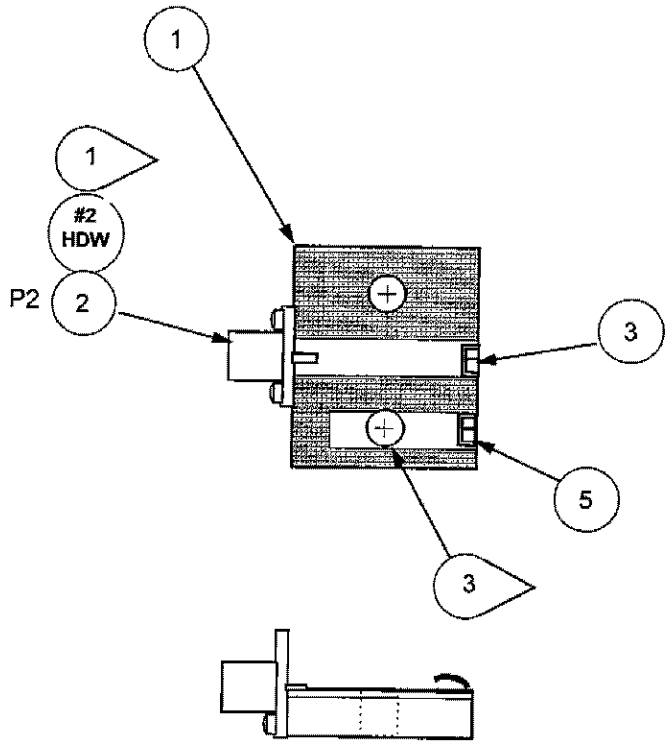

G01

SIZE	CAGE CODE	DRAWING NUMBER	
A	18323	AA421413	
SCALE: NONE		REV 01	SHEET 2

SH 1	PARENTHETIC IDENTITIES ARE FOR REFERENCE ONLY REVISION STATUS OF ALL SHEETS IS IDENTICAL		REVISIONS			
DWG NO.			REV	DESCRIPTION	DATE	APPROVED
			01	PRE-BASELINE RELEASE	8-MAY-97	
			02	DECREASED SUBSTRATE WIDTH FROM 2" TO 1.2" AND MOVED HOLES	16-MAY-97	
	APPLICATION					
	NEXT ASSY	USED ON				
	AA421645	ARSR4 CATS				

DA421413

APPROVED			
DRAFTER / ORIG J. Kneale	ENGINEER	COMPUTER GENERATED DOCUMENT MANUAL CHANGES NOT PERMITTED	INTERPRET DRAWING IAW DOD-STD-100
CHECKER	PRGM ENGRG	INTERPRET DIMENSIONS AND TOLERANCES IAW ANSI Y14.5M - 1982	UNLESS OTHERWISE SPECIFIED DIMENSIONS ARE IN INCHES
DFTG SUPV	MFG	CONTRACT NO. — DTFA01-88-C-00037-ILS	
RELBL	ELEC SENS DVC	ORIGINAL DATE — 8-May-97	
MAINT /SYS SAF	PARTS ENGRG	NORTHROP GRUMMAN CORPORATION BALTIMORE, MARYLAND 21203 USA	
SAFETY	EMI/EMC/TEMPEST	**INPUT TRANSITION SUBSTRATE** POWER AMP MODULE TEST SET	
CUSTOMER	ELEC EN	SIZE **A** / CAGE CODE **18323** / DRAWING NUMBER **DA421413** / REV **01**	
		SCALE: NONE	SHEET 1 OF 4

N:\SSE\PAMTS\DWG\DA421413.DOC

INTERNAL PART NUMBER	APPROVED MANUFACTURERS
DA421413H01	A,B,C

APPROVED MANUFACTURERS		
CODE LTR.	NAME	CAGE CODE (H4./H8)
A	MODULAR COMPONENTS	1DK92
B	FLECK MACHINE	53366
C	NORTHROP GRUMMAN ESSD	97942

SIZE	CAGE CODE	DRAWING NUMBER	
A	18323	DA421413	
SCALE: NONE		REV 01	SHEET 2

1. SCOPE

The purpose of this document is to delineate the materials, drawings, and procedures necessary to produce the Input Transistion Substrate DA421413H01. This substrate is a commercially available laminate that has been etched per artwork, machined, and plated.

2. APPLICABLE DOCUMENTS

2.1 Government Documents

MIL-T-10727	Plating, Tin

2.2 Non-Government Documents

83222TL/A	Process specification, Nickel Plating, Sulfamate
STE-00-PETS-51950	Input Transistion (Artwork only)
3D57169	Printed Wiring Board, Power Module
44771EM	Substrate Material

3. REQUIREMENTS

3.1 Order of Precedence

In event of conflict between the text of this drawing and the document reference herein, the text of this document shall take precedence. Nothing in this specification, however, shall supersede applicable laws and regulations unless a specific exemption has been obtained.

3.2 Materials

Fabricate from Arlon 870 Woven Glass PTFE Composite Laminate

Manufacturer:	Arlon Corp. Microwave Materials Division 1100Governor Lea Rd, Bear DE 19701 (302) 834-2100
Material:	870B0601A33
Dielectric Constant	ϵ_r = 2.33 +/- 0.04 at 10 GHz
Dielectric thickness:	.060 +/- .001
Laminates:	1 oz/ft^2 Electrodeposited Copper bonded to one side, 0.250 thick Aluminum on the other.
Stock Dimension:	1.00 x 1.20"

Material procured as Northrop Grumman (formerly Westinghouse ESG) number 44771CP0062T is an acceptable alternate

3.3 Etching

Etch using Input Spring Finger Interface Assembly artwork for STE-00-PETS-51950

3.4 Machining

Machine per the Drill and Trim view below. Carbide tooling is required for machining through the dielectric due to glass fillers. Machining produces glass fiber dust.

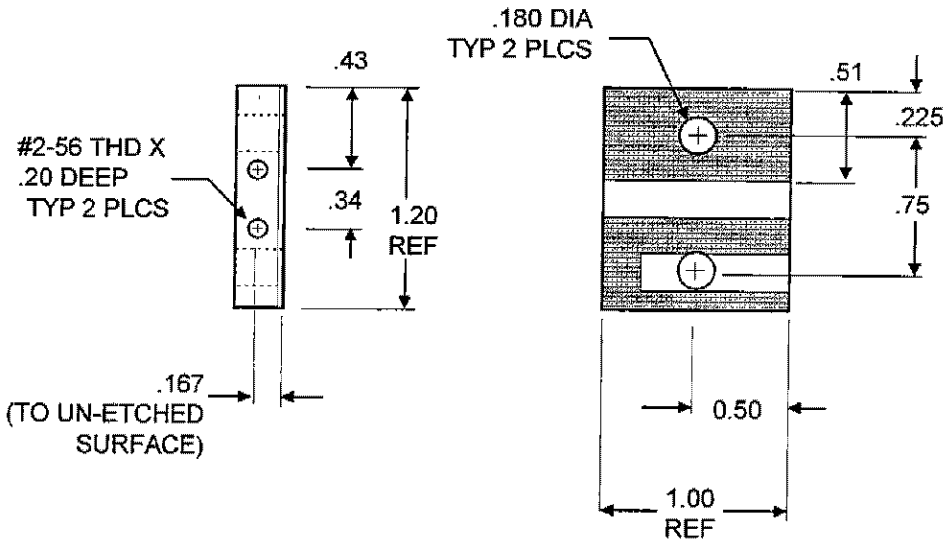

DRILL AND TRIM VIEW

3.5 Plating

Plate exposed Aluminum with no less than 200 microinches of Nickel per 83222TL/A then plate with no less than 250 microinches of Matte Tin per MIL-T-10727.

Plate copper with immersion Tin or no less than 200 microinches of Matte Tin per MIL-T-10727

3.6 Workmanship

The copper shall be free of delamination, deep scratches, or other defects which would affect the RF performance of the unit. The lower .180 Diameter hole that protrudes through the copper may be lightly deburred.

3.7 Marking

The finished product shall be placed in packaging marked with the part number.

4. QUALITY ASSURANCE PROVISIONS

A certificate of conformance shall be submitted with each lot attesting that the product meets the requirements herein.

SIZE	CAGE CODE	DRAWING NUMBER	
A	18323	DA421413	
SCALE: NONE		REV 01	SHEET 4

SH 1 DWG NO. AA421414	PARENTHETIC IDENTITIES ARE FOR REFERENCE ONLY REVISION STATUS OF ALL SHEETS IS IDENTICAL		REVISIONS			
			REV	DESCRIPTION	DATE	APPROVED
			01	PRE-BASELINE RELEASE	9-May-97	
	APPLICATION					
	NEXT ASSY	USED ON				
	SEE PL	SEE PL				

SEE SEPARATE PARTS LIST

APPROVED			
DRAFTER / ORIG J. Kneale	ENGINEER	COMPUTER GENERATED DOCUMENT MANUAL CHANGES NOT PERMITTED	INTERPRET DRAWING IAW DOD-STD-100
CHECKER	PRGM ENGRG	INTERPRET DIMENSIONS AND TOLERANCES IAW ANSI Y14.5M - 1982	UNLESS OTHERWISE SPECIFIED DIMENSIONS ARE IN INCHES
DFTG SUPV	MFG	CONTRACT NO. — DTFA01-88-C-00037-ILS	
RELBL	ELEC SENS DVC	ORIGINAL DATE — 9-May-97	
MAINT /SYS SAF	PARTS ENGRG	NORTHROP GRUMMAN CORPORATION BALTIMORE, MARYLAND 21203 USA	
SAFETY	EMI/EMC/TEMPEST	**4:1 COMBINER POWER AMP MODULE TEST SET**	
CUSTOMER	ELEC EN	SIZE **A** / CAGE CODE **18323**	DRAWING NUMBER **AA421414** / REV **01**
		SCALE: NONE	SHEET 1 OF 2

N:\SSE\PAMTS\DWG\AA421414.DOC

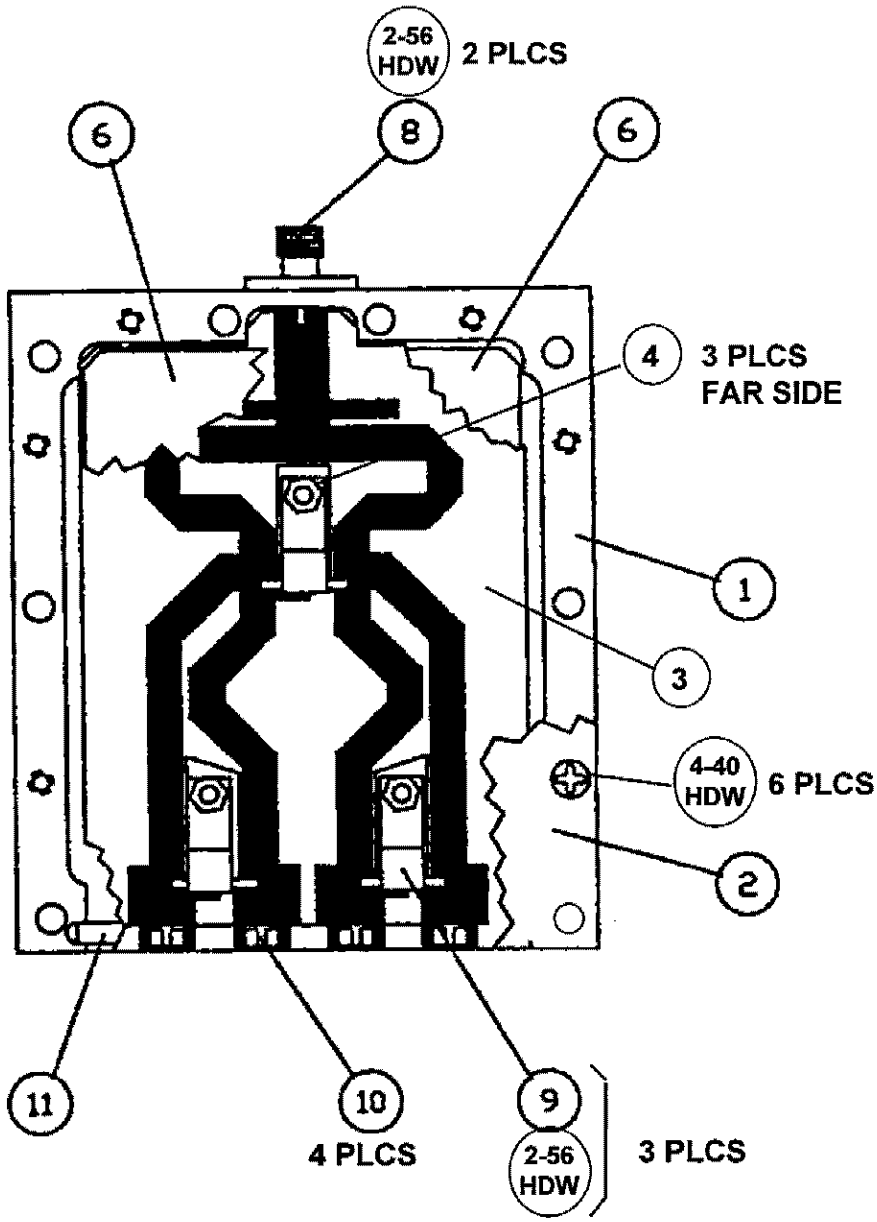

G01

NOTE 1: INSTALL ITEM 2 WITH COUNTERBORED HOLES ORIENTED FAR SIDE.

NOTE 2: SOLDER ITEMS 8, 9, AND 10 TO NEAR SIDE OF 3

SIZE	CAGE CODE	DRAWING NUMBER	
A	18323	AA421414	
SCALE: NONE		REV 01	SHEET 2

SH 1 DWG NO. DA421414	PARENTHETIC IDENTITIES ARE FOR REFERENCE ONLY REVISION STATUS OF ALL SHEETS IS IDENTICAL		REVISIONS			
			REV	DESCRIPTION	DATE	APPROVED
			01	PRE-BASELINE RELEASE	8-May-97	
	APPLICATION					
	NEXT ASSY	USED ON				
	AA421645	ARSR4 CATS				

APPROVED			
DRAFTER / ORIG J. Kneale	ENGINEER	COMPUTER GENERATED DOCUMENT MANUAL CHANGES NOT PERMITTED	INTERPRET DRAWING IAW DOD-STD-100
CHECKER	PRGM ENGRG	INTERPRET DIMENSIONS AND TOLERANCES IAW ANSI Y14.5M - 1982	UNLESS OTHERWISE SPECIFIED DIMENSIONS ARE IN INCHES
DFTG SUPV	MFG	CONTRACT NO. — DTFA01-88-C-00037-ILS	
RELBL	ELEC SENS DVC	ORIGINAL DATE — 8-May-97	
MAINT /SYS SAF	PARTS ENGRG	NORTHROP GRUMMAN CORPORATION BALTIMORE, MARYLAND 21203 USA	
SAFETY	EMI/EMC/TEMPEST	**4:1 COMBINER SUBSTRATE** POWER AMP MODULE TEST SET	
CUSTOMER	ELEC EN	SIZE: A	CAGE CODE: 18323	DRAWING NUMBER: DA421414	REV: 01
		SCALE: NONE		SHEET 1 0F 4	

N:\SSE\PAMTS\DWG\DA421414.DOC

INTERNAL PART NUMBER	APPROVED MANUFACTURERS
DA421414H01	A,B,C

APPROVED MANUFACTURERS		
CODE LTR.	NAME	CAGE CODE (H4./H8)
A	TYCO/NORTH AMERICAN PRINTED CIRCUITS	5L206
C	NORTHROP GRUMMAN ESSD	97942

SIZE	CAGE CODE	DRAWING NUMBER	
A	18323	DA421414	
SCALE: NONE		REV 01	SHEET 2

1. SCOPE

The purpose of this document is to delineate the materials, drawings, and procedures necessary to produce the 4:1 Combiner Substrate DA421414H01. This substrate is a commercially available laminate that has been etched per artwork, machined, and plated.

2. APPLICABLE DOCUMENTS

2.1 Government Documents

MIL-T-10727	Plating, Tin

2.2 Non-Government Documents

83222TL/A	Process specification, Nickel Plating, Sulfamate
STE-00-PETS-70446	4:1 Combiner (Sheet 3 and Artwork only)
44165BQ	PDS for Substrate Material

3. REQUIREMENTS

3.1 Order of Precedence

In event of conflict between the text of this drawing and the document reference herein, the text of this document shall take precedence. Nothing in this specification, however, shall supersede applicable laws and regulations unless a specific exemption has been obtained.

3.2 Materials

Fabricate from synthetic inorganic polyether plastic laminate cloth per Northrop Grumman (formerly Westinghouse ESG) PDS specification 44165BQ0454T

Manufacturer:	see PDS
Dielectric thickness:	.0454 +/- .001
Laminates:	1 oz/ft^2 Copper bonded to both sides
Stock Dimension:	2.950 x 3.750"

Note: this is similar to material procured for the manufacturing of Northrop Grumman part number 3D57058H01 and 3D57061H01.

3.3 Etching

Etch using artwork for STE-00-PETS-70446

3.4 Plating

Plate copper with immersion Tin or no less than 200 microinches of Matte Tin per MIL-T-10727

3.5 Drill and Trim

Trim using the substrate cutout dimensions shown on sheet 3 of STE-00-PETS-70446 as a guide. Use the components at the next assy for fit checks during trimming. Do not cut into any conductors.

3.6 Workmanship

The copper shall be free of delamination, deep scratches, or other defects which would affect the RF performance of the unit.

3.7 Marking

The finished product shall be placed in packaging marked with the part number.

4. QUALITY ASSURANCE PROVISIONS

A certificate of conformance shall be submitted with each lot attesting that the product meets the requirements herein.

SH 1 DWG NO. AA421430	PARENTHETIC IDENTITIES ARE FOR REFERENCE ONLY REVISION STATUS OF ALL SHEETS IS IDENTICAL		REVISIONS			
			REV	DESCRIPTION	DATE	APPROVED
			01	PRE-BASELINE RELEASE	13-Mar-97	
	APPLICATION					
	NEXT ASSY	USED ON				
	KA421400	ARSR4 CATS				

SEE SEPARATE PARTS LIST

APPROVED			
DRAFTER / ORIG J. KNEALE	ENGINEER	COMPUTER GENERATED DOCUMENT MANUAL CHANGES NOT PERMITTED	INTERPRET DRAWING IAW DOD-STD-100
CHECKER	PRGM ENGRG	INTERPRET DIMENSIONS AND TOLERANCES IAW ANSI Y14.5M - 1982	UNLESS OTHERWISE SPECIFIED DIMENSIONS ARE IN INCHES
DFTG SUPV	MFG	CONTRACT NO. — DTFA01-88-C-00037-ILS	
RELBL	ELEC SENS DVC	ORIGINAL DATE — 13-Mar-97	
MAINT /SYS SAF	PARTS ENGRG	NORTHROP GRUMMAN CORPORATION BALTIMORE, MARYLAND 21203 USA	
SAFETY	EMI/EMC/TEMPEST	**COMPUTER ASSEMBLY POWER AMP MODULE TEST SET**	
CUSTOMER	ELEC EN	SIZE **A** / CAGE CODE **18323**	DRAWING NUMBER **AA421430** / REV **01**
		SCALE: NONE	SHEET 1 0F 2

E:\DWG\AA421430.DOC

1 INSTALL INTERCONNECTING CABLES PER CABLE MARKERS

2 CONNECT PERIPHERALS SUPPLIED WITH 1 PER MANUFACTURERS INSTRUCTIONS

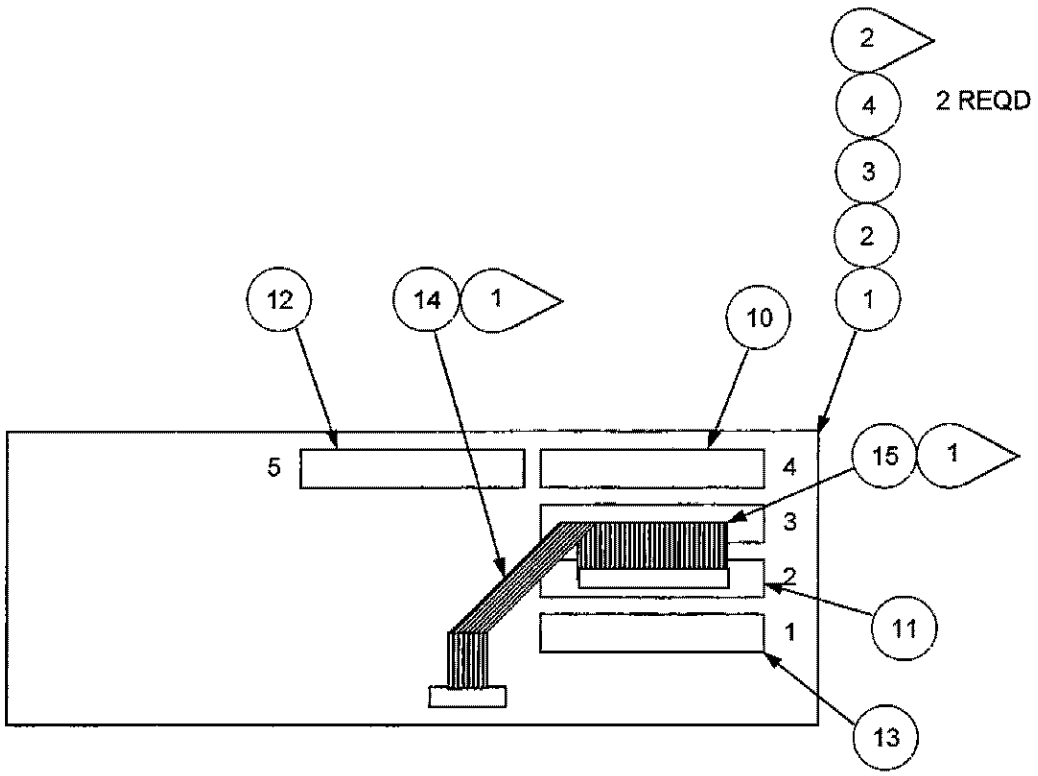

REAR VIEW OF COMPUTER SYSTEM UNIT

SIZE	CAGE CODE	DRAWING NUMBER	
A	18323	AA421430	
SCALE: NONE		REV 01	SHEET 2

SH 1 DWG NO. AA421448	PARENTHETIC IDENTITIES ARE FOR REFERENCE ONLY REVISION STATUS OF ALL SHEETS IS IDENTICAL		REVISIONS			
			REV	DESCRIPTION	DATE	APPROVED
			01	PRE-BASELINE RELEASE		
	APPLICATION					
	NEXT ASSY	USED ON				
	AD421432	ARSR4 CATS				

SEE SEPARATE PARTS LIST

APPROVED			
DRAFTER / ORIG J. Kneale	ENGINEER	COMPUTER GENERATED DOCUMENT MANUAL CHANGES NOT PERMITTED	INTERPRET DRAWING IAW DOD-STD-100
CHECKER	PRGM ENGRG	INTERPRET DIMENSIONS AND TOLERANCES IAW ANSI Y14.5M - 1982	UNLESS OTHERWISE SPECIFIED DIMENSIONS ARE IN INCHES
DFTG SUPV	MFG	CONTRACT NO. — DTFA01-88-C-00037-ILS	
RELBL	ELEC SENS DVC	ORIGINAL DATE — 13-Nov-96	
MAINT /SYS SAF	PARTS ENGRG	NORTHROP GRUMMAN CORPORATION BALTIMORE, MARYLAND 21203 USA	
SAFETY	EMI/EMC/TEMPEST	**SIX-PORT SUBSTRATE ASSY** POWER AMP MODULE TEST SET	
CUSTOMER	ELEC EN	SIZE **A** / CAGE CODE **18323**	DRAWING NUMBER **AA421448** / REV **01**
		SCALE: NONE	SHEET 1 0F 4

N:\SSE\PAMTS\DWG\AA421448.DOC

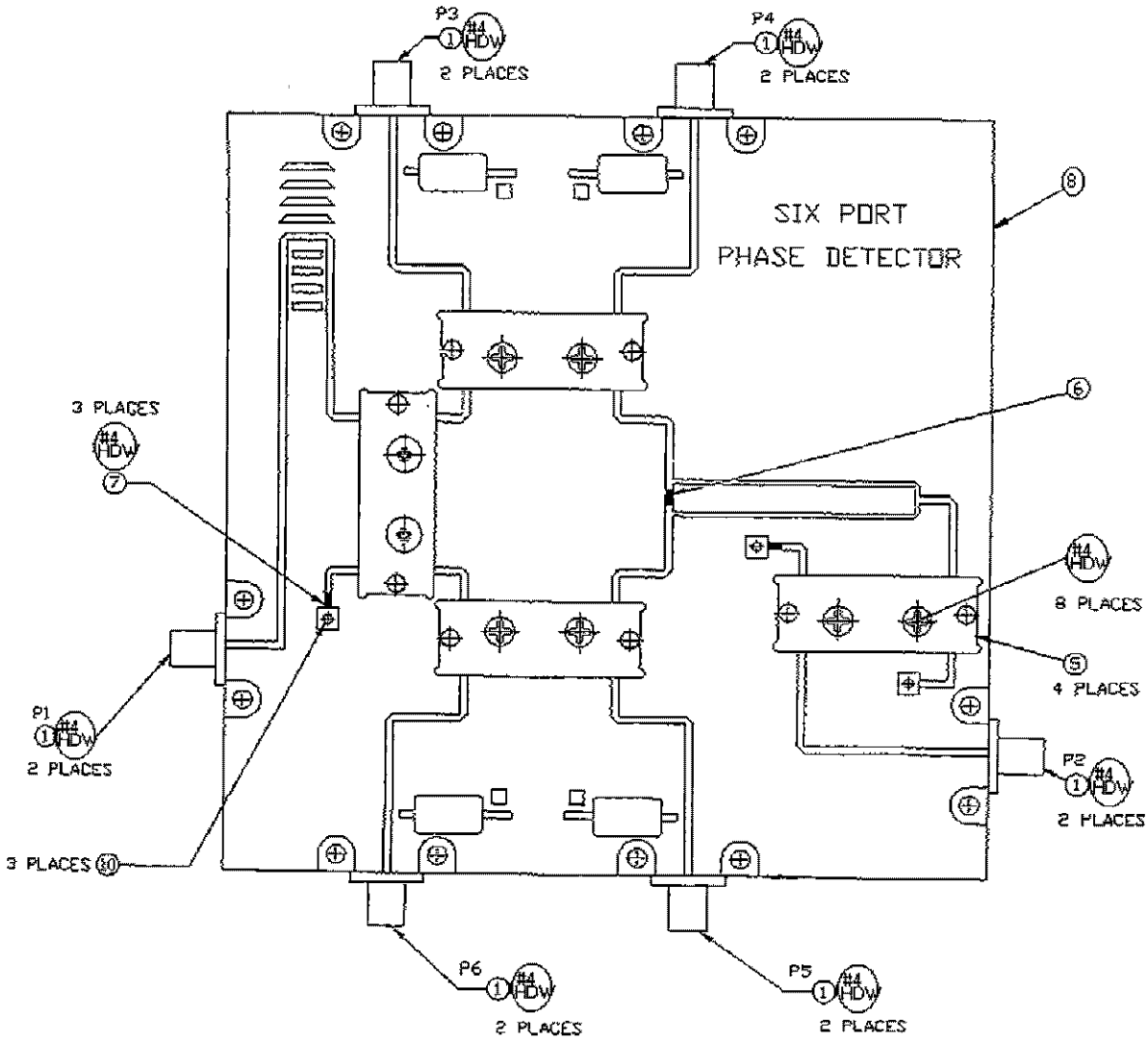

Notes:

1. Test per data sheet below using a Hewlett Packard 8510 Network Analyzer. Tune as neccessary using copper foil
2. Mark part number and serial number using silkscreen or rubber stamp.

SIZE	CAGE CODE	DRAWING NUMBER	
A	18323	AA421448	
SCALE: NONE		REV 01	SHEET 2

1. Data Sheet

1.1 RL at P1 and P2

Frequency	Measured Data	Limits	Pass/Fail
1200		20dB min	
1250		20dB min	
1300		20dB min	
1350		20dB min	
1400		20dB min	

1.2 Insertion Loss (P2-P6, P2-P3)

Frequency	Measured Data	Limits	Pass/Fail
1200		9.75 +/-.50dB	
1250		9.75 +/-.50dB	
1300		9.75 +/-.50dB	
1350		9.75 +/-.50dB	
1400		9.75 +/-.50dB	

1.3 Insertion Phase (P2-P6, P2-P3)

Frequency	Measured Data	Limits	Pass/Fail
1200		106 +/-5°	
1250		82 +/-5°	
1300		59 +/-5°	
1350		35 +/-5°	
1400		12 +/-5°	

1.4 Insertion Loss (P2-P5, P2-P4)

Frequency	Measured Data	Limits	Pass/Fail
1200		9.75 +/-.50dB	
1250		9.75 +/-.50dB	
1300		9.75 +/-.50dB	
1350		9.75 +/-.50dB	
1400		9.75 +/-.50dB	

1.5 Insertion Phase (P2-P5, P2-P4)

Frequency	Measured Data	Limits	Pass/Fail
1200		-164 +/-5°	
1250		173 +/-5°	
1300		149 +/-5°	
1350		126 +/-5°	
1400		101 +/-5°	

1.6 Insertion Loss (P1-P3)

Frequency	Measured Data	Limits	Pass/Fail
1200		6.21 +/-.50dB	
1250		6.21 +/-.50dB	
1300		6.21 +/-.50dB	
1350		6.21 +/-.50dB	
1400		6.21 +/-.50dB	

1.7 Insertion Phase (P1-P3)

Frequency	Measured Data	Limits	Pass/Fail
1200		-77 +/-5°	
1250		-100 +/-5°	
1300		-124 +/-5°	
1350		-147 +/-5°	
1400		-170 +/-5°	

1.8 Insertion Loss (P1-P4, P1-P6)

Frequency	Measured Data	Limits	Pass/Fail
1200		6.75 +/-.50dB	
1250		6.75 +/-.50dB	
1300		6.75 +/-.50dB	
1350		6.75 +/-.50dB	
1400		6.75 +/-.50dB	

1.9 Insertion Phase (P1-P4, P1-P6)

Frequency	Measured Data	Limits	Pass/Fail
1200		-164 +/-5°	
1250		173 +/-5°	
1300		149 +/-5°	
1350		126 +/-5°	
1400		101 +/-5°	

1.10 Insertion Loss (P1-P5)

Frequency	Measured Data	Limits	Pass/Fail
1200		6.75 +/-.50dB	
1250		6.75 +/-.50dB	
1300		6.75 +/-.50dB	
1350		6.75 +/-.50dB	
1400		6.75 +/-.50dB	

1.11 Insertion Phase (P1-P5)

Frequency	Measured Data	Limits	Pass/Fail
1200		106 +/-5°	
1250		82 +/-5°	
1300		59 +/-5°	
1350		35 +/-5°	
1400		12 +/-5°	

SH 1	PARENTHETIC IDENTITIES ARE FOR REFERENCE ONLY REVISION STATUS OF ALL SHEETS IS IDENTICAL		REVISIONS			
DWG NO.			REV	DESCRIPTION	DATE	APPROVED
			01	PRE-BASELINE RELEASE	13-NOV-96	
			02	CORRECT ARTWORK PART NUMBER	6-DEC-96	
	APPLICATION					
	NEXT ASSY	USED ON				
	AA421448	ARSR4 CATS				

DA421448

APPROVED			
DRAFTER / ORIG J. Kneale	ENGINEER	COMPUTER GENERATED DOCUMENT MANUAL CHANGES NOT PERMITTED	INTERPRET DRAWING IAW DOD-STD-100
CHECKER	PRGM ENGRG	INTERPRET DIMENSIONS AND TOLERANCES IAW ANSI Y14.5M - 1982	UNLESS OTHERWISE SPECIFIED DIMENSIONS ARE IN INCHES
DFTG SUPV	MFG	CONTRACT NO. — DTFA01-88-C-00037-ILS	
RELBL	ELEC SENS DVC	ORIGINAL DATE — 13-Nov-96	
MAINT /SYS SAF	PARTS ENGRG	NORTHROP GRUMMAN CORPORATION BALTIMORE, MARYLAND 21203 USA	
SAFETY	EMI/EMC/TEMPEST	**SIX-PORT SUBSTRATE** POWER AMP MODULE TEST SET	
CUSTOMER	ELEC EN	SIZE **A** / CAGE CODE **18323**	DRAWING NUMBER **DA421448** / REV **02**
		SCALE: NONE	SHEET 1 0F 4

N:\SSE\PAMTS\DWG\DA421448.DOC

INTERNAL PART NUMBER	APPROVED MANUFACTURERS
DA421448H01	A,B,C

APPROVED MANUFACTURERS		
CODE LTR.	NAME	CAGE CODE (H4./H8)
A	MODULAR COMPONENTS	1DK92
B	FLECK MACHINE	53366
C	NORTHROP GRUMMAN ESSD	97942

SIZE	CAGE CODE	DRAWING NUMBER	
A	18323	DA421448	
SCALE: NONE		REV 02	SHEET 2

1. SCOPE

The purpose of this document is to delineate the materials, drawings, and procedures necessary to produce the Six-Port Substrate DA421448H01. This substrate is a commercially available laminate that has been etched per artwork, machined, and plated.

2. APPLICABLE DOCUMENTS

2.1 Government Documents

MIL-T-10727	Plating, Tin

2.2 Non-Government Documents

83222TL/A	Process specification, Nickel Plating, Sulfamate
STE-00-PETS-51949	6 Port Assy Drawing
STE-00-PETS-70454	Six Port Phase Detector Artwork

3. REQUIREMENTS

3.1 Order of Precedence

In event of conflict between the text of this drawing and the document reference herein, the text of this document shall take precedence. Nothing in this specification, however, shall supersede applicable laws and regulations unless a specific exemption has been obtained.

3.2 Materials

Fabricate from Arlon 880B0154A17 PTFE Composite Laminate

Manufacturer:	Arlon Corp. 1100 Governor Lea Road, Bear, DE 19701 Phone: (302) 834-2100 CAGE code 52896
Dielectric Material:	Woven Glass PFTE
Dielectric Constant	2.17
Dielectric thickness:	.015 +/- .001
Laminates:	1 oz/ft2 Rolled Copper bonded to one side, 0.250 thick Aluminum on the other.
Stock Dimension:	5.200 x 5.200"

3.3 Etching

Etch using artwork STE-00-PETS-70454 Rev 0/A. Note that the artwork is marked with Sketch number 9RX1057-00.

3.4 Machining

Machine per the Drill and Trim view of STE-00-PETS-51949.

3.5 Plating

Plate exposed Aluminum with no less than 200 microinches of Nickel per 83222TL/A then plate with no less than 250 microinches of Matte Tin per MIL-T-10727.

Plate copper with immersion Tin or no less than 200 microinches of Matte Tin per Mil-T-10727

3.6 Workmanship

The copper shall be free of delamination, deep scratches, or other defects which would affect the RF performance of the unit.

3.7 Marking

The finished product shall be placed in packaging marked with the part number.

4. QUALITY ASSURANCE PROVISIONS

A certificate of conformance shall be submitted with each lot attesting that the product meets the requirements herein.

SH 1	PARENTHETIC IDENTITIES ARE FOR REFERENCE ONLY REVISION STATUS OF ALL SHEETS IS IDENTICAL		REVISIONS			
DWG NO.			REV	DESCRIPTION	DATE	APPROVED
			01	PRE-BASELINE RELEASE	9-May-97	
	APPLICATION					
	NEXT ASSY	USED ON				
	SEE PL	SEE PL				

AA421645

SEE SEPARATE PARTS LIST

APPROVED			
DRAFTER / ORIG J. Kneale	ENGINEER	COMPUTER GENERATED DOCUMENT MANUAL CHANGES NOT PERMITTED	INTERPRET DRAWING IAW DOD-STD-100
CHECKER	PRGM ENGRG	INTERPRET DIMENSIONS AND TOLERANCES IAW ANSI Y14.5M - 1982	UNLESS OTHERWISE SPECIFIED DIMENSIONS ARE IN INCHES
DFTG SUPV	MFG	CONTRACT NO. — DTFA01-88-C-00037-ILS	
RELBL	ELEC SENS DVC	ORIGINAL DATE — 9-May-97	
MAINT /SYS SAF	PARTS ENGRG	NORTHROP GRUMMAN CORPORATION BALTIMORE, MARYLAND 21203 USA	
SAFETY	EMI/EMC/TEMPEST	**PHASE REFERENCE ASSY POWER AMP MODULE TEST SET**	

CUSTOMER	ELEC EN	SIZE	CAGE CODE	DRAWING NUMBER	REV
		A	18323	AA421645	01
		SCALE: NONE			SHEET 1 0F 2

N:\SSE\PAMTS\DWG\AA421645.DOC

1 Bond to substrate using conductive epoxy. Do not extend leads beyond tracks

2 Solder ribbon to connector before soldering to substrate

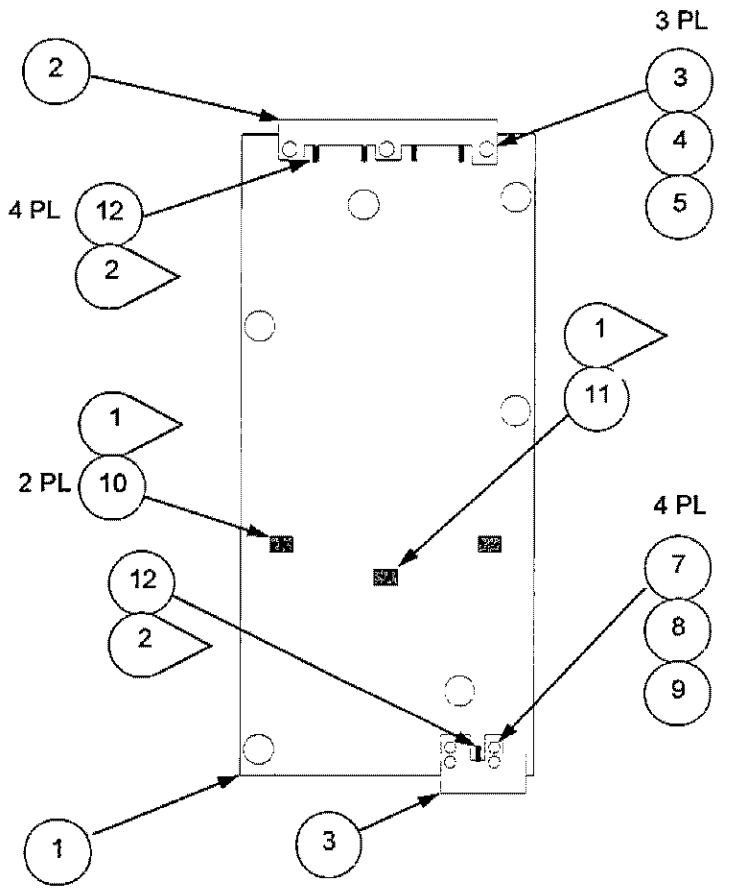

GO1

SIZE	CAGE CODE	DRAWING NUMBER	
A	18323	AA421645	
SCALE: NONE		REV 01	SHEET 2

SH 1	PARENTHETIC IDENTITIES ARE FOR REFERENCE ONLY REVISION STATUS OF ALL SHEETS IS IDENTICAL	REVISIONS			
DWG NO.		REV	DESCRIPTION	DATE	APPROVED
		01	PRE-BASELINE RELEASE	8-May-97	
	APPLICATION				
	NEXT ASSY / USED ON				
	AA421645 / ARSR4 CATS				

DA421645

APPROVED			
DRAFTER / ORIG J. Kneale	ENGINEER	COMPUTER GENERATED DOCUMENT MANUAL CHANGES NOT PERMITTED	INTERPRET DRAWING IAW DOD-STD-100
CHECKER	PRGM ENGRG	INTERPRET DIMENSIONS AND TOLERANCES IAW ANSI Y14.5M - 1982	UNLESS OTHERWISE SPECIFIED DIMENSIONS ARE IN INCHES
DFTG SUPV	MFG	CONTRACT NO. — DTFA01-88-C-00037-ILS	
RELBL	ELEC SENS DVC	ORIGINAL DATE — 8-May-97	
MAINT /SYS SAF	PARTS ENGRG	NORTHROP GRUMMAN CORPORATION BALTIMORE, MARYLAND 21203 USA	
SAFETY	EMI/EMC/TEMPEST	**PHASE REFERENCE SUBSTRATE** POWER AMP MODULE TEST SET	
CUSTOMER	ELEC EN	SIZE: A / CAGE CODE: 18323	DRAWING NUMBER: DA421645 / REV: 01
		SCALE: NONE	SHEET 1 OF 4

N:\SSE\PAMTS\DWG\DA421645.DOC

INTERNAL PART NUMBER	APPROVED MANUFACTURERS
DA421645H01	A,B,C

APPROVED MANUFACTURERS		
CODE LTR.	NAME	CAGE CODE (H4./H8)
A	MODULAR COMPONENTS	1DK92
B	FLECK MACHINE	53366
C	NORTHROP GRUMMAN ESSD	97942

SIZE	CAGE CODE	DRAWING NUMBER	
A	18323	DA421645	
SCALE: NONE		REV 01	SHEET 2

1. SCOPE

The purpose of this document is to delineate the materials, drawings, and procedures necessary to produce the Phase Reference Substrate DA421645H01. This substrate is a commercially available laminate that has been etched per artwork, machined, and plated.

2. APPLICABLE DOCUMENTS

2.1 Government Documents

MIL-T-10727	Plating, Tin

2.2 Non-Government Documents

83222TL/A	Process specification, Nickel Plating, Sulfamate
STE-00-PETS-51951	Phase Reference (Drawing and Artwork)
3D57169	Printed Wiring Board, Power Module
44771EM	Substrate Material

3. REQUIREMENTS

3.1 Order of Precedence

In event of conflict between the text of this drawing and the document reference herein, the text of this document shall take precedence. Nothing in this specification, however, shall supersede applicable laws and regulations unless a specific exemption has been obtained.

3.2 Materials

Fabricate from RT/duroid 6010LM Ceramic PTFE Composite

Manufacturer:	(Rogers Corp. Microwave and Circuit Materials Division 100S. Roosevelt Ave, Chandler AZ (602) 961-1382)
Material:	6060LM
Dielectric Constant	$\epsilon_r = 10.2$
Dielectric thickness:	.025 +/- .001
Laminates:	1 oz/ft^2 Electrodeposited Copper bonded to one side, 0.185 thick Aluminum on the other.
Stock Dimension:	7.000" x 3.200"

Material procured as Northrop Grumman (formerly Westinghouse ESG) number 44771EM0253T for 3D57169H01 is an acceptable alternate

3.3 Etching

Etch using artwork STE-00-PETS-51951

3.4 Machining

Machine per the Drill and Trim view of STE-00-PETS-51951. Note that many of the dimensions for counterbored holes are similar to 3D57169H01. Carbide tooling is required for machining through the dielectric due to ceramic fillers.

3.5 Plating

Plate exposed Aluminum with no less than 200 microinches of Nickel per 83222TL/A then plate with no less than 250 microinches of Matte Tin per MIL-T-10727.

Plate copper with immersion Tin or no less than 200 microinches of Matte Tin per Mil-T-10727

3.6 Workmanship

The copper shall be free of delamination, deep scratches, or other defects which would affect the RF performance of the unit.

3.7 Marking

The finished product shall be placed in packaging marked with the part number.

4. QUALITY ASSURANCE PROVISIONS

A certificate of conformance shall be submitted with each lot attesting that the product meets the requirements herein.

SH 1 DWG NO. AA421646	PARENTHETIC IDENTITIES ARE FOR REFERENCE ONLY REVISION STATUS OF ALL SHEETS IS IDENTICAL		REVISIONS			
			REV	DESCRIPTION	DATE	APPROVED
			01	PRE-BASELINE RELEASE	12-MAY-97	
	APPLICATION					
	NEXT ASSY	USED ON				
	SEE P/L	SEE P/L				

SEE SEPARATE PARTS LIST

APPROVED			
DRAFTER / ORIG J. Kneale	ENGINEER	COMPUTER GENERATED DOCUMENT MANUAL CHANGES NOT PERMITTED	INTERPRET DRAWING IAW DOD-STD-100
CHECKER	PRGM ENGRG	INTERPRET DIMENSIONS AND TOLERANCES IAW ANSI Y14.5M - 1982	UNLESS OTHERWISE SPECIFIED DIMENSIONS ARE IN INCHES
DFTG SUPV	MFG	CONTRACT NO. — DTFA01-88-C-00037-ILS	
RELBL	ELEC SENS DVC	ORIGINAL DATE — 12-MAY-97	
MAINT /SYS SAF	PARTS ENGRG	NORTHROP GRUMMAN CORPORATION BALTIMORE, MARYLAND 21203 USA	
SAFETY	EMI/EMC/TEMPEST	**4-WAY INPUT TRANSITION ASSEMBLY** POWER AMP MODULE TEST SET	
CUSTOMER	ELEC EN	SIZE: A	CAGE CODE: 18323	DRAWING NUMBER: AA421646	REV: 01
		SCALE: NONE		SHEET 1 0F 2	

N:\SSE\PAMTS\DWG\DA421413.DOC

1 ASSURE CENTER CONTACT OF FN 2 DOES NOT CONTACT SUBSTRATE BASE

2 SOLDER FN 4 TO FN 2 BEFORE SOLDERING TO FN 1.

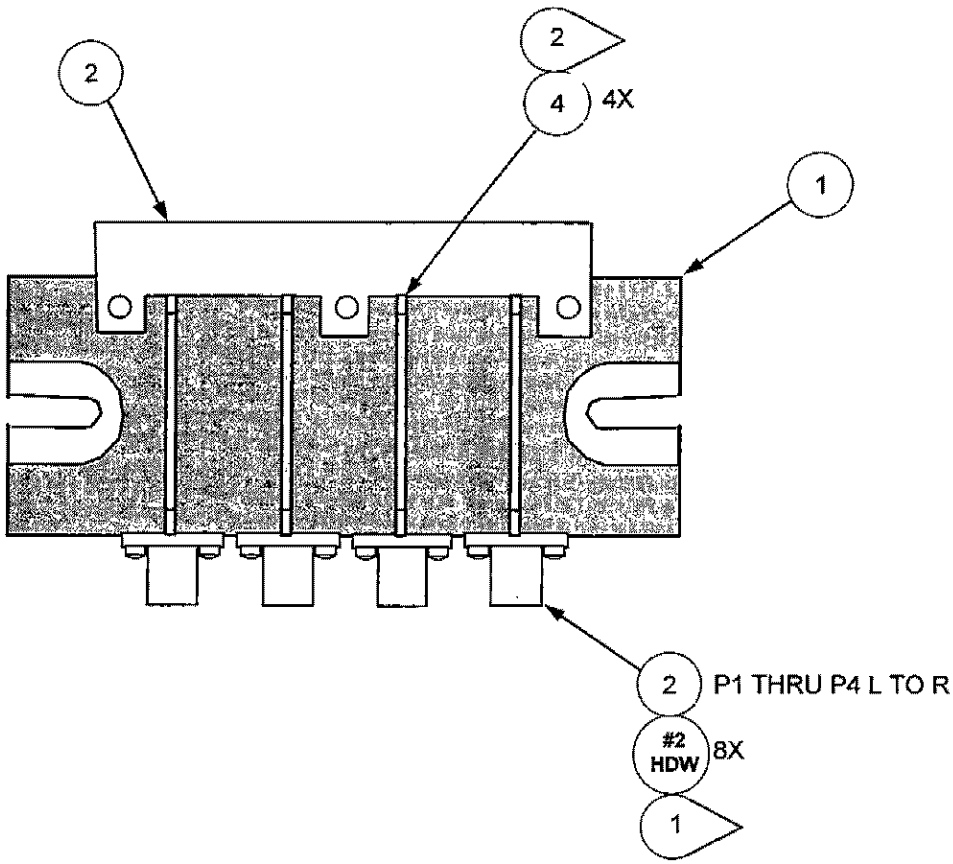

G01

SIZE	CAGE CODE	DRAWING NUMBER	
A	18323	AA421646	
SCALE: NONE		REV 01	SHEET 2

SH 1	PARENTHETIC IDENTITIES ARE FOR REFERENCE ONLY REVISION STATUS OF ALL SHEETS IS IDENTICAL		REVISIONS			
DWG NO.			REV	DESCRIPTION	DATE	APPROVED
			01	PRE-BASELINE RELEASE	8-May-97	
	APPLICATION					
	NEXT ASSY	USED ON				
	AA421645	ARSR4 CATS				

DA421646

APPROVED			
DRAFTER / ORIG J. Kneale	ENGINEER	COMPUTER GENERATED DOCUMENT MANUAL CHANGES NOT PERMITTED	INTERPRET DRAWING IAW DOD-STD-100
CHECKER	PRGM ENGRG	INTERPRET DIMENSIONS AND TOLERANCES IAW ANSI Y14.5M - 1982	UNLESS OTHERWISE SPECIFIED DIMENSIONS ARE IN INCHES
DFTG SUPV	MFG	CONTRACT NO. — DTFA01-88-C-00037-ILS	
RELBL	ELEC SENS DVC	ORIGINAL DATE — 8-May-97	
MAINT /SYS SAF	PARTS ENGRG	NORTHROP GRUMMAN CORPORATION BALTIMORE, MARYLAND 21203 USA	
SAFETY	EMI/EMC/TEMPEST	**4-WAY INPUT TRANSITION SUBSTRATE** POWER AMP MODULE TEST SET	
CUSTOMER	ELEC EN	SIZE: A	CAGE CODE: 18323	DRAWING NUMBER: DA421646	REV: 01
		SCALE: NONE		SHEET 1 0F 4	

N:\SSE\PAMTS\DWG\DA421646.DOC

INTERNAL PART NUMBER	APPROVED MANUFACTURERS
DA421646H01	A,B,C

APPROVED MANUFACTURERS		
CODE LTR.	NAME	CAGE CODE (H4./H8)
A	MODULAR COMPONENTS	1DK92
B	FLECK MACHINE	53366
C	NORTHROP GRUMMAN ESSD	97942

SIZE	CAGE CODE	DRAWING NUMBER	
A	18323	DA421646	
SCALE: NONE		REV 01	SHEET 2

1. SCOPE

The purpose of this document is to delineate the materials, drawings, and procedures necessary to produce the 4-Way Input Transition Substrate DA421646H01. This substrate is a commercially available laminate that has been etched per artwork, machined, and plated.

2. APPLICABLE DOCUMENTS

2.1 Government Documents

MIL-T-10727	Plating, Tin

2.2 Non-Government Documents

83222TL/A	Process specification, Nickel Plating, Sulfamate
STE-00-PETS-70449	4-Way Input Transition (Drawing and Artwork)
3D57169	Printed Wiring Board, Power Module
44771EM	Substrate Material

3. REQUIREMENTS

3.1 Order of Precedence

In event of conflict between the text of this drawing and the document reference herein, the text of this document shall take precedence. Nothing in this specification, however, shall supersede applicable laws and regulations unless a specific exemption has been obtained.

3.2 Materials

Fabricate from RT/duroid 6010LM Ceramic PTFE Composite

Manufacturer:	(Rogers Corp. Microwave and Circuit Materials Division 100S. Roosevelt Ave, Chandler AZ (602) 961-1382)
Material:	6060LM
Dielectric Constant	$\epsilon_r = 10.2$
Dielectric thickness:	.025 +/- .001
Laminates:	1 oz/ft^2 Electrodeposited Copper bonded to one side, 0.185 thick Aluminum on the other.
Stock Dimension:	1.25 x 3.20"

Material procured as Northrop Grumman (formerly Westinghouse ESG) number 44771EM0253T for 3D57169H01 is an acceptable alternate

3.3 Etching

Etch using artwork STE-00-PETS-70449

3.4 Machining

Machine per the Drill and Trim view of STE-00-PETS-70449. Note that many of the dimensions for counterbored holes are similar to 3D57169H01. Carbide tooling is required for machining through the dielectric due to ceramic fillers.

3.5 Plating

Plate exposed Aluminum with no less than 200 microinches of Nickel per 83222TL/A then plate with no less than 250 microinches of Matte Tin per MIL-T-10727.

Plate copper with immersion Tin or no less than 200 microinches of Matte Tin per Mil-T-10727

3.6 Workmanship

The copper shall be free of delamination, deep scratches, or other defects which would affect the RF performance of the unit.

3.7 Marking

The finished product shall be placed in packaging marked with the part number.

4. QUALITY ASSURANCE PROVISIONS

A certificate of conformance shall be submitted with each lot attesting that the product meets the requirements herein.

SH 1 DWG NO. AA421647	PARENTHETIC IDENTITIES ARE FOR REFERENCE ONLY REVISION STATUS OF ALL SHEETS IS IDENTICAL		REVISIONS			
			REV	DESCRIPTION	DATE	APPROVED
			01	PRE-BASELINE RELEASE	12-MAY-97	
	APPLICATION					
	NEXT ASSY	USED ON				
	SEE P/L	SEE P/L				

SEE SEPARATE PARTS LIST

APPROVED			
DRAFTER / ORIG J. Kneale	ENGINEER	COMPUTER GENERATED DOCUMENT MANUAL CHANGES NOT PERMITTED	INTERPRET DRAWING IAW DOD-STD-100
CHECKER	PRGM ENGRG	INTERPRET DIMENSIONS AND TOLERANCES IAW ANSI Y14.5M - 1982	UNLESS OTHERWISE SPECIFIED DIMENSIONS ARE IN INCHES
DFTG SUPV	MFG	CONTRACT NO. — DTFA01-88-C-00037-ILS	
RELBL	ELEC SENS DVC	ORIGINAL DATE — 12-MAY-97	
MAINT /SYS SAF	PARTS ENGRG	NORTHROP GRUMMAN CORPORATION BALTIMORE, MARYLAND 21203 USA	
SAFETY	EMI/EMC/TEMPEST	**4-WAY OUTPUT TRANSITION ASSEMBLY** POWER AMP MODULE TEST SET	
CUSTOMER	ELEC EN	SIZE **A** / CAGE CODE **18323**	DRAWING NUMBER **AA421647** / REV **01**
		SCALE: NONE	SHEET 1 OF 2

N:\SSE\PAMTS\DWG\DA421413.DOC

1 ASSURE CENTER CONTACT OF FN 2 DOES NOT CONTACT SUBSTRATE BASE

2 SOLDER ITEMS 2, 3, AND 5 TO 1 APPROXIMATELY AS SHOWN

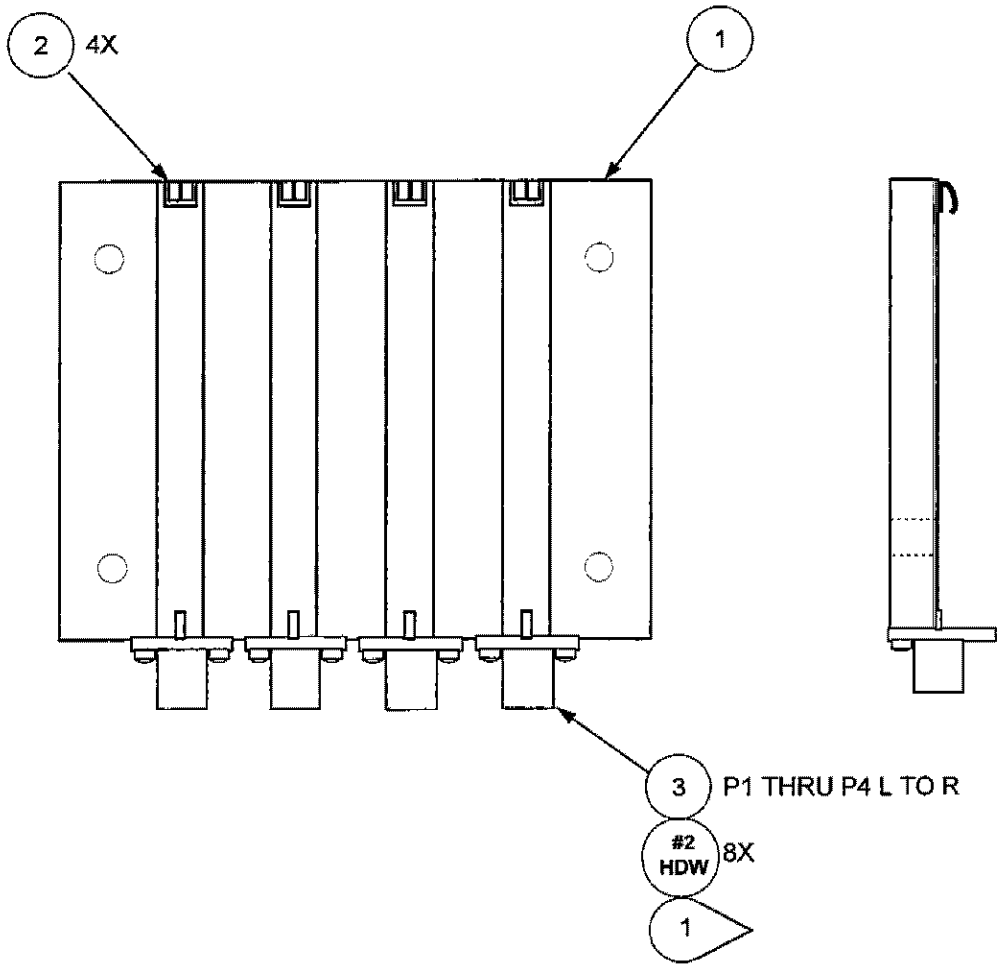

G01

SIZE	CAGE CODE	DRAWING NUMBER
A	18323	AA421647
SCALE: NONE	REV 01	SHEET 2

SH 1 DWG NO. DA421647	PARENTHETIC IDENTITIES ARE FOR REFERENCE ONLY REVISION STATUS OF ALL SHEETS IS IDENTICAL		REVISIONS			
			REV	DESCRIPTION	DATE	APPROVED
			01	PRE-BASELINE RELEASE	8-May-97	
	APPLICATION					
	NEXT ASSY	USED ON				
	AA421645	ARSR4 CATS				

APPROVED			
DRAFTER / ORIG J. Kneale	ENGINEER	COMPUTER GENERATED DOCUMENT MANUAL CHANGES NOT PERMITTED	INTERPRET DRAWING IAW DOD-STD-100
CHECKER	PRGM ENGRG	INTERPRET DIMENSIONS AND TOLERANCES IAW ANSI Y14.5M - 1982	UNLESS OTHERWISE SPECIFIED DIMENSIONS ARE IN INCHES
DFTG SUPV	MFG	CONTRACT NO. — DTFA01-88-C-00037-ILS	
RELBL	ELEC SENS DVC	ORIGINAL DATE — 8-May-97	
MAINT /SYS SAF	PARTS ENGRG	NORTHROP GRUMMAN CORPORATION BALTIMORE, MARYLAND 21203 USA	
SAFETY	EMI/EMC/TEMPEST	**4-WAY OUTPUT TRANSISTION SUBSTRATE** POWER AMP MODULE TEST SET	
CUSTOMER	ELEC EN	SIZE **A** / CAGE CODE **18323**	DRAWING NUMBER **DA421647** / REV **01**
		SCALE: NONE	SHEET 1 0F 4

N:\SSE\PAMTS\DWG\DA421647.DOC

INTERNAL PART NUMBER	APPROVED MANUFACTURERS
DA421647H01	A,B,C

APPROVED MANUFACTURERS		
CODE LTR.	NAME	CAGE CODE (H4./H8)
A	MODULAR COMPONENTS	1DK92
B	FLECK MACHINE	53366
C	NORTHROP GRUMMAN ESSD	97942

SIZE	CAGE CODE	DRAWING NUMBER	
A	18323	DA421647	
SCALE: NONE		REV 01	SHEET 2

1. SCOPE

The purpose of this document is to delineate the materials, drawings, and procedures necessary to produce the 4-Way Output Transistion Substrate DA421647H01. This substrate is a commercially available laminate that has been etched per artwork, machined, and plated.

2. APPLICABLE DOCUMENTS

2.1 Government Documents

MIL-T-10727	Plating, Tin

2.2 Non-Government Documents

83222TL/A	Process specification, Nickel Plating, Sulfamate
STE-00-PETS-70445	4-Way Output Transistion (Drawing and Artwork)
3D57169	Printed Wiring Board, Power Module
44771EM	Substrate Material

3. REQUIREMENTS

3.1 Order of Precedence

In event of conflict between the text of this drawing and the document reference herein, the text of this document shall take precedence. Nothing in this specification, however, shall supersede applicable laws and regulations unless a specific exemption has been obtained.

3.2 Materials

Fabricate from Arlon 870 Woven Glass PTFE Composite Laminate

Manufacturer:	Arlon Corp. Microwave Materials Division 1100Governor Lea Rd, Bear DE 19701 (302) 834-2100
Material:	870B0601A33
Dielectric Constant	ϵ_r = 2.33 +/- 0.04 at 10 GHz
Dielectric thickness:	.060 +/- .001
Laminates:	1 oz/ft^2 Electrodeposited Copper bonded to one side, 0.250 thick Aluminum on the other.
Stock Dimension:	2.50 X 3.20

Material procured as Northrop Grumman (formerly Westinghouse ESG) number 44771CP0062T is an acceptable alternate

3.3 Etching

Etch using artwork STE-00-PETS-70445

3.4 Machining

Machine per the Drill and Trim view of STE-00-PETS-70445. Carbide tooling is required for machining through the dielectric due to glass fillers. Machining produces glass fiber dust.

3.5 Plating

Plate exposed Aluminum with no less than 200 microinches of Nickel per 83222TL/A then plate with no less than 250 microinches of Matte Tin per MIL-T-10727.

Plate copper with immersion Tin or no less than 200 microinches of Matte Tin per Mil-T-10727

3.6 Workmanship

The copper shall be free of delamination, deep scratches, or other defects which would affect the RF performance of the unit.

3.7 Marking

The finished product shall be placed in packaging marked with the part number.

4. QUALITY ASSURANCE PROVISIONS

A certificate of conformance shall be submitted with each lot attesting that the product meets the requirements herein.

SH 1	PARENTHETIC IDENTITIES ARE FOR REFERENCE ONLY REVISION STATUS OF ALL SHEETS IS IDENTICAL	REVISIONS			
DWG NO.		REV	DESCRIPTION	DATE	APPROVED
		01	PRE-BASELINE RELEASE		
	APPLICATION				
	NEXT ASSY / USED ON				

AA421785

SEE SEPARATE PARTS LIST

APPROVED			
DRAFTER / ORIG J. Kneale	ENGINEER	COMPUTER GENERATED DOCUMENT MANUAL CHANGES NOT PERMITTED	INTERPRET DRAWING IAW DOD-STD-100
CHECKER	PRGM ENGRG	INTERPRET DIMENSIONS AND TOLERANCES IAW ANSI Y14.5M - 1982	UNLESS OTHERWISE SPECIFIED DIMENSIONS ARE IN INCHES
DFTG SUPV	MFG	CONTRACT NO. — DTFA01-88-C-00037-ILS	
RELBL	ELEC SENS DVC	ORIGINAL DATE — 16-Jan-97	
MAINT /SYS SAF	PARTS ENGRG	NORTHROP GRUMMAN CORPORATION BALTIMORE, MARYLAND 21203 USA	
SAFETY	EMI/EMC/TEMPEST	**ADAPTER ASSEMBLY SELF TEST**	
CUSTOMER	ELEC EN	SIZE: A	CAGE CODE: 18323
		DRAWING NUMBER: AA421785	REV: 01
		SCALE: NONE	SHEET 1 OF 3

C:\MSOFFICE\WINWORD\TEMPLATE_CABLE.DOT

1 MARK USING SILKSCREEN. .125 CHARACTERS, COLOR BLK EPOXY.

2 DRILL AND FILE BACKSHELL IN APPOXIMATE AREA AS INDICATED TO MOUNT 2

3 ALL WIRE TO BE AWG 24 UNLESS OTHERWISE SPECIFIED

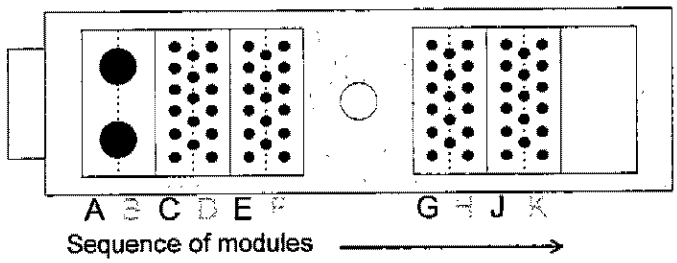

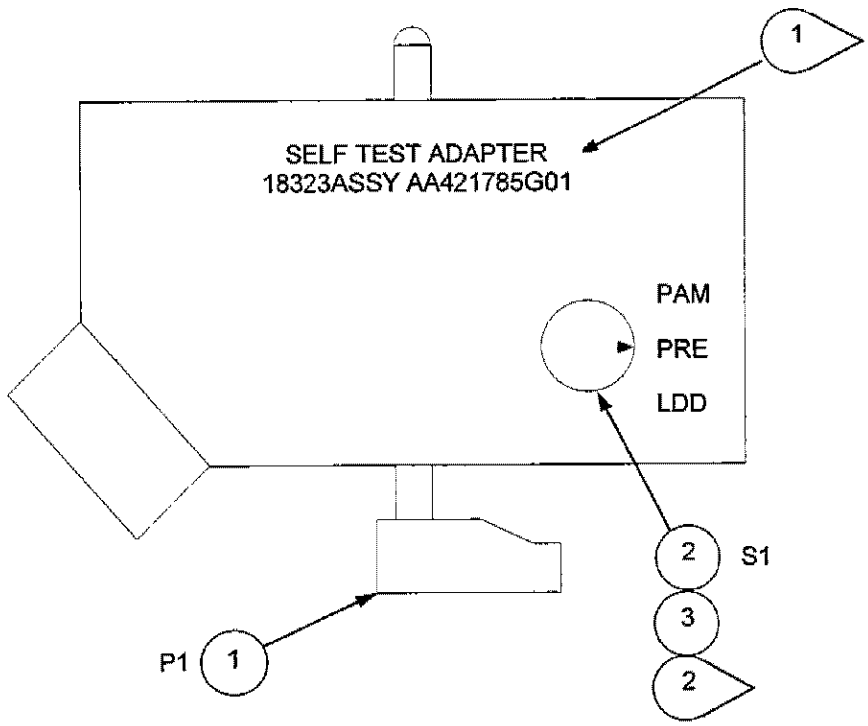

SIZE	CAGE CODE	DRAWING NUMBER	
A	18323	AA421785	
SCALE: NONE		REV 01	SHEET 2

WIRE TABLE FOR G01

Unless otherwise specified, all connections refer to pins on connector P1

From	To	To
A1	G15	J9
A2	G16	J10
C1	C3	J1
C2	C4	J2
C5	C7	J3
C6	C8	J4
C9	C11	J5
C10	C12	J6
C13	C15	J7
C14	C16	J8
C17	G17	S1 - C
E1	G1	
E2	G2	
E3	G3	
E4	G4	

From	To	To
E5	G5	
E6	G6	
E7	G7	
E8	G8	
E9	J9	
E10	J10	
E11	J11	
E12	J12	
E13	n.c.	
E14	n.c.	
E15	S1 - 1	
E16	S1 - 2	
E17	S1 - 3	
G9 - G14	n.c.	

1:1 Scale Silkscreen artwork and hole plan

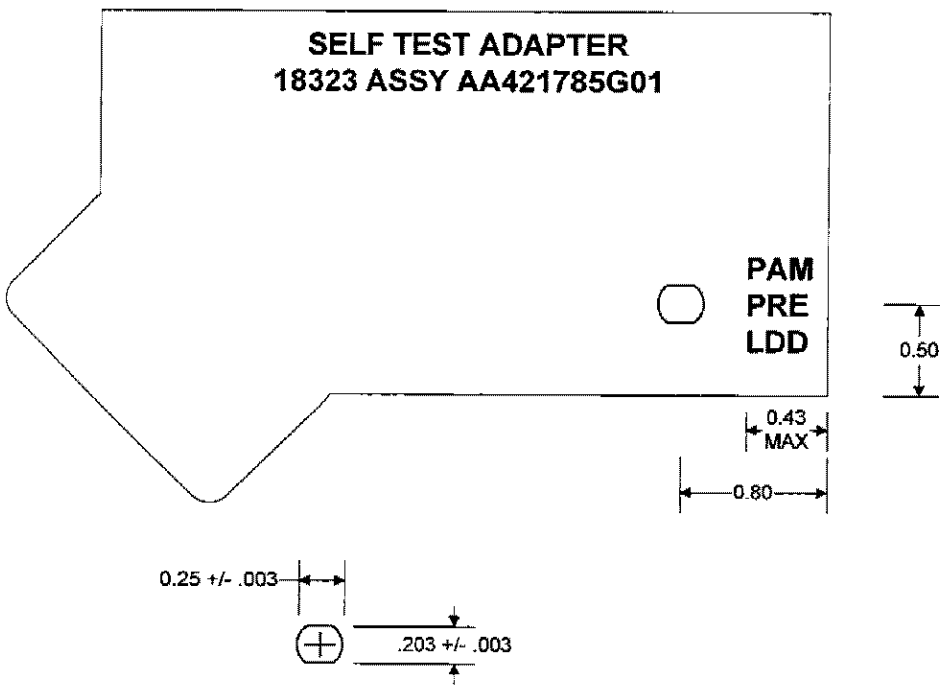

SIZE	CAGE CODE	DRAWING NUMBER	
A	18323	AA421785	
SCALE: NONE		REV 01	SHEET 3

APPENDIX A

LIST OF ACRONYMS AND ABBREVIATIONS

List of Acronyms and Abbreviations

Acronym/Abbreviation	Meaning
A	ampere
A/D	analog-to-digital
AC	alternating current
ARSR-4	Air Route Surveillance Radar-Model 4
ATTI	Advanced Testing Technologies, Inc.
BIT	built-in test
BITE	built-in test equipment
C	Celsius
CAGE	commercial and government entity
CCA	circuit card assembly
COT	commercial off-the-shelf
CW	continuous wave
dB	decibel
DC	direct current
DMM	digital multimeter
ESD	electrostatic discharge
FAA	Federal Aviation Administration
GPIB	general purpose interface bus
Hz	Hertz
I/O	input/output
IC	integrated circuit
IF	intermediate frequency
INTFC	interface
ITA	interface test adapter
kHz	kilohertz
L-L	line-to-line (voltage)
LED	light-emitting diode
LLRF	low level radio frequency
mA	milliampere
MHz	megahertz
MOD	module

Acronym/Abbreviation	Meaning
MTR	meter
mV	millivolt
N/A	not applicable
NG	Northrop Grumman
no.	number
NSN	national stock number
PAL	programmable array logic
PAM	power amplifier module
PC	personal computer
PCB	printed circuit board
PK	peak
PL	parts list
PN	part number

List of Acronyms and Abbreviations--Continued

PS	power supply
PWA	printed wiring assembly
PWB	printed wiring board
PWR	power
QTY	quantity
RF	radio frequency
TDI	Transistor Devices, Inc.
TIB	technical instruction book
TPS	test program set
UUT	unit under test
Vac	volts alternating current
Vdc	volts direct current
Vp-p	volts peak-to-peak
Vrms	volts root mean square

DATE:
SUBJECT:

FROM:
TO:

a. Present Problems-

b. Recommended Improvements-

Signature

FACILITY IDENTIFIER & ADDRESS