TI 6340.56

CONTROLLED DOCUMENT

FINAL

REPAIR MANUAL
DEPOT MAINTENANCE

ARSR-4 SYSTEM

UUTs TESTED ON POWER AMPLIFIER MODULE TEST SET

CONTRACT DTFA01-88-C-00037

CONTRACTOR
NORTHROP GRUMMAN CORPORATION
BALTIMORE, MARYLAND 21203

MADE FOR
U.S. DEPARTMENT OF TRANSPORTATION
FEDERAL AVIATION ADMINISTRATION

(31 JULY 1998)

Attachment 3
Exhibit 6.2

INTRODUCTION

This repair manual consists of four separately-bound manuals containing depot-level repair data for units tested on the power amplifier module (PAM) test set. This manual contains general repair data, specific repair data for each unit tested, and Appendix A, List of Acronyms and Abbreviations, in an 8 1/2-inch by 11-inch format. Appendix B, Assembly Drawings, is a separately-bound manual in an 11-inch by 17-inch flat-pak format. Appendix C, Parts Lists, and Appendix D, Wire Data, are separately-bound manuals in an 8 1/2-inch by 11-inch format.

SAFETY SUMMARY

SAFETY NOTICE

The attention of operating and maintenance personnel is directed to Federal Aviation Administration (FAA) Instruction 6000.15, Maintenance of Airway Facilities, for instructions on the subject of safety precautions to be observed, and to FAA Order 3900.0, Accident Prevention Handbook for Airway Facility Personnel. Personnel must observe the safety regulations at all times.

KEEP AWAY FROM LIVE CIRCUITS

Hazardous voltages are present within units under test. Use extreme caution when removing or installing plug-in components or making adjustments. Under certain conditions, dangerous potentials may exist in circuits with power controls in the off position due to charges retained by capacitors. To avoid casualties, always remove power, and then discharge the capacitors with a grounding rod before touching any parts.

WARNINGS AND CAUTIONS

Observe all warnings and cautions within this manual for maximum personnel and equipment safety.

PRECAUTIONARY NOTICE, SEMICONDUCTOR DEVICES/INTEGRATED CIRCUITS

This equipment contains semiconductor devices that may be damaged by static discharge. Strictly adhere to the electrostatic discharge (ESD) precautionary measures within this manual before attempting to perform any procedure.

TABLE OF CONTENTS

Paragraph	Title	Page
	Chapter 1 - General Information	
1.1	Introduction	1-1
1.2	Depot Repairable Assemblies/Subassemblies	1-1
1.3	Depot Repair Facility Requirements	1-2
1.4	Tools and Test Equipment	1-2
1.5	Consumable Material	1-3
1.6	Related Publications	1-6
1.7	Standard Shop Practices	1-7
1.7.1	Unpacking	1-7
1.7.1.1	Special Handling Precautions	1-7
1.7.1.2	Unpacking Procedure	1-7
1.7.2	Packing	1-8
1.7.2.1	Special Handling Precautions	1-9
1.7.2.2	Packing Procedure	1-9
1.7.3	Examination	1-9
1.7.3.1	Hardware and Electrical Components	1-10
1.7.3.2	Cables, Wires, and Connectors	1-10
1.7.3.3	Placards and Markings	1-10
1.7.4	Cleaning	1-10
1.7.4.1	Cleaning Moderately Contaminated Items	1-10
1.7.4.2	Cleaning Highly Contaminated Items	1-11
1.7.5	Disassembly and Reassembly	1-12
1.7.5.1	Electrostatic Discharge (ESD) Precautions	1-13
1.7.5.2	Component Location	1-13
1.7.5.3	Wire Removal	1-13
1.7.5.4	Component Mounting	1-13
1.7.5.5	Threaded Hardware and Component Mounting	1-13
1.7.5.6	SMA Connector Torqueing	1-13
1.8	Repair Notes	1-13
1.8.1	General RF Tuning Procedure	1-14
1.8.1.1	Tuning Diagram	1-16
1.8.1.2	Tuning Procedure	1-19
1.8.1.3	General Foil Installation	1-19
1.8.1.3.1	Indium Foil Preparation and Installation	1-23
1.8.1.3.2	Indium Foil Removal	1-24
1.8.1.3.3	Tuning Foil Preparation and Installation	1-24
1.8.2	Application of Low Outgassing Dielectric Epoxy Adhesive (PDS53320LG)	1-25
1.8.3	Application of Silver Filled Epoxy Adhesive (M53311EQ)	1-26

TABLE OF CONTENTS--(Continued)

Paragraph	Title	Page
1.8.4	Application of Dielectric Thermally-Conductive Epoxy Adhesive (M53320TW)	1-27
1.8.5	Application of White RTV Silicone Rubber Adhesive (M45793HB) or Clear RTV Silicone Rubber Adhesive (M45793FL)	1-28
1.8.6	Application of Thread-Locking Adhesive (M53320UA or M53320UC)	1-28
1.9	Typical Test Procedure	1-29
1.9.1	Computer Typographic Conventions	1-29
1.9.2	Test Executive Program Initialization	1-30
1.9.3	Test Executive Program Exit	1-36
1.10	Troubleshooting	1-36
	Chapter 2 - Preamplifier Assembly PN 3D56069G01 Repair	
2.1	Scope	2-1
2.2	Tools and Test Equipment	2-2
2.3	Consumable Material	2-2
2.4	Disassembly	2-3
2.5	Examination and Cleaning	2-3
2.6	Repair and Replacement	2-3
2.7	Reassembly	2-3
2.8	Test Description	2-4
2.8.1	Performance Tests	2-4
2.8.1.1	Test 0 - RF Track Check (Pre-lid Only)	2-4
2.8.1.2	Test 1 - Regulator Check (Pre-lid Only)	2-4
2.8.1.3	Test 2 - Class A Tuning (Pre-lid Only)	2-5
2.8.1.3.1	Amplifier Power Output	2-5
2.8.1.3.2	A3R59 Adjustment	2-5
2.8.1.3.3	Spurious Emissions	2-5
2.8.1.3.4	Oscillations and Pulse Integrity	2-5
2.8.1.3.5	Exiting Class A Tuning	2-5
2.8.1.4	Test 3 - Class C Tuning (Pre-lid Only)	2-5
2.8.1.4.1	Amplifier Power Output	2-6
2.8.1.4.2	Collector Voltage Adjustment	2-6
2.8.1.4.3	Spurious Emissions	2-6
2.8.1.4.4	Oscillations and Pulse Integrity	2-6
2.8.1.4.5	Exiting Class C Tuning	2-6
2.8.1.5	Test 4 - Input Filter Return Loss Test	2-6
2.8.1.5.1	Return Loss At 1215 MHz	2-6

TABLE OF CONTENTS--(Continued)

Paragraph	Title	Page
2.8.1.5.2	Return Loss At 1250 MHz	2-6
2.8.1.5.3	Return Loss At 1300 MHz	2-7
2.8.1.5.4	Return Loss At 1350 MHz	2-7
2.8.1.5.5	Return Loss At 1400 MHz	2-7
2.8.1.6	Test 5 - PRF Limiting Test	2-7
2.8.1.7	Test 6 - RF Disable Test	2-7
2.8.1.8	Test 7 - Pulse Droop Test	2-7
2.8.1.8.1	Pulse Droop At 1215 MHz	2-7
2.8.1.8.2	Pulse Droop At 1300 MHz	2-7
2.8.1.8.3	Pulse Droop At 1400 MHz	2-8
2.8.1.9	Test 8 - Narrow Sweep Band Spurious Emissions Test	2-8
2.8.1.9.1	Input Power Level of -4.8 dBm At 1215 MHz	2-8
2.8.1.9.2	Input Power Level of -4.8 dBm At 1250 MHz	2-8
2.8.1.9.3	Input Power Level of -4.8 dBm At 1300 MHz	2-8
2.8.1.9.4	Input Power Level of -4.8 dBm At 1350 MHz	2-8
2.8.1.9.5	Input Power Level of -4.8 dBm At 1400 MHz	2-8
2.8.1.9.6	Input Power Level of -1.7 dBm At 1215 MHz	2-8
2.8.1.9.7	Input Power Level of -1.7 dBm At 1250 MHz	2-9
2.8.1.9.8	Input Power Level of -1.7 dBm At 1300 MHz	2-9
2.8.1.9.9	Input Power Level of -1.7 dBm At 1350 MHz	2-9
2.8.1.9.10	Input Power Level of -1.7 dBm At 1400 MHz	2-10
2.8.1.9.11	Input Power Level of +1.4 dBm At 1215 MHz	2-10
2.8.1.9.12	Input Power Level of +1.4 dBm At 1250 MHz	2-10
2.8.1.9.13	Input Power Level of +1.4 dBm At 1300 MHz	2-10
2.8.1.9.14	Input Power Level of +1.4 dBm At 1350 MHz	2-10
2.8.1.9.15	Input Power Level of +1.4 dBm At 1400 MHz	2-10
2.8.1.10	Test 9 - Wide Sweep Band Spurious Emissions Test	2-10
2.8.1.10.1	Input Frequency of 1215 MHz	2-10
2.8.1.10.2	Input Frequency of 1250 MHz	2-10
2.8.1.10.3	Input Frequency of 1300 MHz	2-10
2.8.1.10.4	Input Frequency of 1350 MHz	2-11
2.8.1.10.5	Input Frequency of 1400 MHz	2-11
2.8.1.11	Test 10 - Monitor Port Test	2-11
2.8.1.11.1	Monitor Port Test At 1215 MHz	2-12
2.8.1.11.2	Monitor Port Test At 1250 MHz	2-12
2.8.1.11.3	Monitor Port Test At 1300 MHz	2-12
2.8.1.11.4	Monitor Port Test At 1350 MHz	2-12
2.8.1.11.5	Monitor Port Test At 1400 MHz	2-12
2.8.1.12	Test 11 - Output Power Test	2-12
2.8.1.12.1	Input Power Level of -4.8 dBm At 1215 MHz	2-12

TABLE OF CONTENTS--(Continued)

Paragraph	Title	Page
2.8.1.12.2	Input Power Level of -4.8 dBm At 1250 MHz	2-12
2.8.1.12.3	Input Power Level of -4.8 dBm At 1300 MHz	2-12
2.8.1.12.4	Input Power Level of -4.8 dBm At 1350 MHz	2-12
2.8.1.12.5	Input Power Level of -4.8 dBm At 1400 MHz	2-12
2.8.1.12.6	Input Power Level of -1.7 dBm At 1215 MHz	2-13
2.8.1.12.7	Input Power Level of -1.7 dBm At 1250 MHz	2-13
2.8.1.12.8	Input Power Level of -1.7 dBm At 1300 MHz	2-13
2.8.1.12.9	Input Power Level of -1.7 dBm At 1350 MHz	2-13
2.8.1.12.10	Input Power Level of -1.7 dBm At 1400 MHz	2-13
2.8.1.12.11	Input Power Level of +1.4 dBm At 1215 MHz	2-13
2.8.1.12.12	Input Power Level of +1.4 dBm At 1250 MHz	2-13
2.8.1.12.13	Input Power Level of +1.4 dBm At 1300 MHz	2-13
2.8.1.12.14	Input Power Level of +1.4 dBm At 1350 MHz	2-13
2.8.1.12.15	Input Power Level of +1.4 dBm At 1400 MHz	2-14
2.8.1.13	Test 12 - Insertion Phase Test	2-14
2.8.2	Diagnostic Tests	2-14
2.9	Test Procedure	2-14
2.10	Troubleshooting	2-18
2.11	Assembly Drawings and Parts Lists	2-18
2.12	Wire Data	2-19

Chapter 3 - Lookdown Driver Assembly PN 3D56075G01 Repair

3.1	Scope	3-1
3.2	Tools and Test Equipment	3-2
3.3	Consumable Material	3-2
3.4	Disassembly	3-3
3.5	Examination and Cleaning	3-3
3.6	Repair and Replacement	3-4
3.7	Reassembly	3-4
3.8	Test Description	3-4
3.8.1	Performance Tests	3-4
3.8.1.1	Test 0 - Power Supply Test	3-5
3.8.1.2	Test 1 - Pulse Integrity Test	3-5
3.8.1.3	Test 2 - BITE/Diode Detection Test	3-6
3.8.1.3.1	BITE/Diode Detection Module 1	3-6
3.8.1.3.2	BITE/Diode Detection Module 2	3-6
3.8.1.3.3	BITE/Diode Detection Module 3	3-6
3.8.1.3.4	BITE/Diode Detection Module 4	3-6
3.8.1.3.5	BITE/Diode Detection UART	3-6

TABLE OF CONTENTS--(Continued)

Paragraph	Title	Page
3.8.1.3.6	BITE/Diode Detection 7.5 VREF	3-6
3.8.1.3.7	BITE/Diode Detection Module 1 With No RF Input	3-7
3.8.1.3.8	BITE/Diode Detection Module 2 With No RF Input	3-7
3.8.1.3.9	BITE/Diode Detection Module 3 With No RF Input	3-7
3.8.1.3.10	BITE/Diode Detection Module 4 With No RF Input	3-7
3.8.1.3.11	BITE/Diode Detection UART With No RF Input	3-7
3.8.1.3.12	BITE/Diode Detection 7.5 VREF With No RF Input	3-8
3.8.1.4	Test 3 - Return Loss Test	3-8
3.8.1.4.1	J14 Return Loss At 1215 MHz	3-8
3.8.1.4.2	J14 Return Loss At 1400 MHz	3-8
3.8.1.5	Test 4 - RF Power Output of J11 [36V] Test	3-8
3.8.1.5.1	RF Power Output of J11 [36V] At 1215 MHz	3-8
3.8.1.5.2	RF Power Output of J11 [36V] At 1250 MHz	3-8
3.8.1.5.3	RF Power Output of J11 [36V] At 1300 MHz	3-8
3.8.1.5.4	RF Power Output of J11 [36V] At 1350 MHz	3-8
3.8.1.5.5	RF Power Output of J11 [36V] At 1400 MHz	3-9
3.8.1.6	Test 5 RF Power Output of J11 [38V] Test	3-9
3.8.1.6.1	RF Power Output of J11 [38V] At 1215 MHz	3-9
3.8.1.6.2	RF Power Output of J11 [38V] At 1250 MHz	3-9
3.8.1.6.3	RF Power Output of J11 [38V] At 1300 MHz	3-9
3.8.1.6.4	RF Power Output of J11 [38V] At 1350 MHz	3-9
3.8.1.6.5	RF Power Output of J11 [38V] At 1400 MHz	3-9
3.8.1.7	Test 6 - RF Power Output of J11 [40V] Test	3-9
3.8.1.7.1	RF Power Output of J11 [40V] At 1215 MHz	3-9
3.8.1.7.2	RF Power Output of J11 [40V] At 1250 MHz	3-9
3.8.1.7.3	RF Power Output of J11 [40V] At 1300 MHz	3-9
3.8.1.7.4	RF Power Output of J11 [40V] At 1350 MHz	3-9
3.8.1.7.5	RF Power Output of J11 [40V] At 1400 MHz	3-10
3.8.1.8	Test 7 - Pulse Droop Test	3-10
3.8.1.8.1	Pulse Droop At 1215 MHz	3-10
3.8.1.8.2	Pulse Droop At 1300 MHz	3-10
3.8.1.8.3	Pulse Droop At 1400 MHz	3-10
3.8.1.9	Test 8 - Spurious Emissions Test	3-10
3.8.1.10	Test 9 - Monitor Port Measurements	3-10
3.8.1.10.1	Power Output of P1 At 1215 MHz	3-10
3.8.1.10.2	Power Output of P1 At 1300 MHz	3-10
3.8.1.10.3	Power Output of P1 At 1400 MHz	3-10
3.8.1.11	Test 10 - RF Power Output of J10 [36V] Test	3-10
3.8.1.11.1	RF Power Output of J10 [36V] At 1215 MHz	3-11
3.8.1.11.2	RF Power Output of J10 [36V] At 1250 MHz	3-11

TABLE OF CONTENTS--(Continued)

Paragraph	Title	Page
3.8.1.11.3	RF Power Output of J10 [36V] At 1300 MHz	3-11
3.8.1.11.4	RF Power Output of J10 [36V] At 1350 MHz	3-11
3.8.1.11.5	RF Power Output of J10 [36V] At 1400 MHz	3-11
3.8.1.12	Test 11 - RF Power Output of J10 [38V] Test	3-11
3.8.1.12.1	RF Power Output of J10 [38V] At 1215 MHz	3-11
3.8.1.12.2	RF Power Output of J10 [38V] At 1250 MHz	3-11
3.8.1.12.3	RF Power Output of J10 [38V] At 1300 MHz	3-11
3.8.1.12.4	RF Power Output of J10 [38V] At 1350 MHz	3-11
3.8.1.12.5	RF Power Output of J10 [38V] At 1400 MHz	3-11
3.8.1.13	Test 12 - RF Power Output of J10 [40V] Test	3-11
3.8.1.13.1	RF Power Output of J10 [40V] At 1215 MHz	3-12
3.8.1.13.2	RF Power Output of J10 [40V] At 1250 MHz	3-12
3.8.1.13.3	RF Power Output of J10 [40V] At 1300 MHz	3-12
3.8.1.13.4	RF Power Output of J10 [40V] At 1350 MHz	3-12
3.8.1.13.5	RF Power Output of J10 [40V] At 1400 MHz	3-12
3.8.2	Diagnostic Tests	3-12
3.9	Test Procedure	3-12
3.10	Troubleshooting	3-15
3.11	Assembly Drawings and Parts Lists	3-15
3.12	Wire Data	3-16

Chapter 4 - Power Module CCA PN 3D56076G01, G02 Repair

4.1	Scope	4-1
4.2	Tools and Test Equipment	4-1
4.3	Consumable Material	4-1
4.4	Disassembly	4-2
4.5	Examination and Cleaning	4-2
4.6	Repair and Replacement	4-2
4.7	Reassembly	4-3
4.8	Test Description	4-3
4.8.1	Performance Tests	4-3
4.8.1.1	Test 0 - Return Loss Test	4-3
4.8.1.1.1	Q1 Return Loss At 1215 MHz	4-3
4.8.1.1.2	Q1 Return Loss At 1250 MHz	4-3
4.8.1.1.3	Q1 Return Loss At 1300 MHz	4-3
4.8.1.1.4	Q1 Return Loss At 1350 MHz	4-3
4.8.1.1.5	Q1 Return Loss At 1400 MHz	4-3
4.8.1.2	Test 1 - BITE/Cap Test	4-4
4.8.1.2.1	BITE/Cap Input Voltage	4-4

TABLE OF CONTENTS--(Continued)

Paragraph	Title	Page
4.8.1.2.2	BITE/Cap Output Volgate	4-4
4.8.1.2.3	BITE/Cap Droop	4-4
4.8.1.3	Test 2 - Output Power Test	4-4
4.8.1.3.1	Output Power At 1215 MHz	4-4
4.8.1.3.2	Output Power At 1250 MHz	4-4
4.8.1.3.3	Output Power At 1300 MHz	4-4
4.8.1.3.4	Output Power At 1350 MHz	4-4
4.8.1.3.5	Output Power At 1400 MHz	4-4
4.8.1.3.6	Pulse Integrity	4-5
4.8.1.4	Test 3 - Output Flatness Test	4-5
4.8.1.4.1	Output Flatness At 1215 MHz	4-5
4.8.1.4.2	Output Flatness At 1300 MHz	4-6
4.8.1.4.3	Output Flatness At 1400 MHz	4-6
4.8.1.5	Test 4 Average Current Draw Test	4-6
4.8.1.5.1	Average Current Draw At 1215 MHz	4-6
4.8.1.5.2	Average Current Draw At 1300 MHz	4-6
4.8.1.5.3	Average Current Draw At 1400 MHz	4-6
4.8.1.6	Test 5 - Insertion Phase Measurement	4-6
4.8.1.7	Test 6 - Spurious Emissions Test	4-6
4.8.1.7.1	Wide Band Spurious Emissions Test	4-6
4.8.1.7.2	Narrow Band Spurious Emissions Test	4-6
4.8.2	Diagnostic Tests	4-7
4.8.2.1	Testing	4-7
4.8.2.2	Tuning	4-7
4.8.2.2.1	Circuit Checks	4-7
4.8.2.2.1.1	Measurements/Tuning	4-7
4.8.2.2.1.1.1	Return Loss (S11)	4-7
4.8.2.2.1.1.2	Insertion Phase (S21)	4-9
4.8.2.2.1.1.3	Combined Output Power	4-9
4.8.2.2.1.1.4	Transistor Current Tuning	4-11
4.8.2.2.1.1.5	Tuning Check	4-11
4.8.2.2.1.1.5.1	Insertion Phase Angle	4-11
4.8.2.2.1.1.5.2	Transistor Current	4-11
4.8.2.2.2	Tuning Location Restrictions	4-12
4.9	Test Procedure	4-12
4.10	Troubleshooting	4-14
4.11	Assembly Drawings and Parts Lists	4-14
4.12	Wire Data	4-14

TABLE OF CONTENTS--(Continued)

Paragraph	Title	Page
	Chapter 5 - Power Module CCA PN 3D62739G01 Repair	
5.1	Scope	5-1
5.2	Tools and Test Equipment	5-1
5.3	Consumable Material	5-1
5.4	Disassembly	5-2
5.5	Examination and Cleaning	5-2
5.6	Repair and Replacement	5-2
5.7	Reassembly	5-3
5.8	Test Description	5-3
5.8.1	Performance Tests	5-3
5.8.1.1	Test 0 - Return Loss Test	5-3
5.8.1.1.1	Q1 Return Loss At 1215 MHz	5-3
5.8.1.1.2	Q1 Return Loss At 1250 MHz	5-3
5.8.1.1.3	Q1 Return Loss At 1300 MHz	5-3
5.8.1.1.4	Q1 Return Loss At 1350 MHz	5-3
5.8.1.1.5	Q1 Return Loss At 1400 MHz	5-4
5.8.1.2	Test 1 - BITE/Cap Test	5-4
5.8.1.2.1	BITE/Cap Input Voltage	5-4
5.8.1.2.2	BITE/Cap Output Voltage	5-4
5.8.1.2.3	BITE/Cap Droop	5-4
5.8.1.3	Test 2 - Output Power Test	5-4
5.8.1.3.1	Output Power At 1215 MHz	5-4
5.8.1.3.2	Output Power At 1250 MHz	5-4
5.8.1.3.3	Output Power At 1300 MHz	5-4
5.8.1.3.4	Output Power At 1350 MHz	5-4
5.8.1.3.5	Output Power At 1400 MHz	5-4
5.8.1.3.6	Pulse Integrity	5-4
5.8.1.4	Test 3 - Output Flatness Test	5-5
5.8.1.4.1	Output Flatness At 1215 MHz	5-5
5.8.1.4.2	Output Flatness At 1300 MHz	5-5
5.8.1.4.3	Output Flatness At 1400 MHz	5-6
5.8.1.5	Test 4 - Average Current Draw Test	5-6
5.8.1.5.1	Average Current Draw At 1215 MHz	5-6
5.8.1.5.2	Average Current Draw At 1300 MHz	5-6
5.8.1.5.3	Average Current Draw At 1400 MHz	5-6
5.8.1.6	Test 5 - Insertion Phase Measurement	5-6
5.8.1.7	Test 6 - Spurious Emissions Test	5-6
5.8.1.7.1	Wide Band Spurious Emissions Test	5-6
5.8.1.7.2	Narrow Band Spurious Emissions Test	5-6

TABLE OF CONTENTS--(Continued)

Paragraph	Title	Page
5.8.2	Diagnostic Tests	5-6
5.8.2.1	Testing	5-7
5.8.2.2	Tuning	5-7
5.8.2.2.1	Circuit Checks	5-7
5.8.2.2.1.1	Measurements/Tuning	5-7
5.8.2.2.1.1.1	Input Return Loss Tuning	5-7
5.8.2.2.1.1.2	Setting Drive to the Four Output Transistors	5-7
5.8.2.2.1.1.3	Equalizer Leg Adjustment	5-10
5.8.2.2.1.1.4	Output Transistor Tuning for Power and Flatness	5-11
5.8.2.2.1.1.5	Output Transistor Phasing Adjustment	5-11
5.8.2.2.1.1.6	Insertion Phase	5-12
5.8.2.2.2	Tuning Location Restrictions	5-12
5.9	Test Procedure	5-13
5.10	Troubleshooting	5-14
5.11	Assembly Drawings and Parts Lists	5-14
5.12	Wire Data	5-14

APPENDIXES

A	List of Acronyms and Abbreviations	A-1
B	Assembly Drawings	B-1
C	Parts Lists	C-1
D	Wire Data	D-1

LIST OF ILLUSTRATIONS

Figure	Title	Page
1-1	Reusable Container	1-8
1-2	Tuning Wand Fabrication	1-15
1-3	Sample Tuning Diagram	1-17
1-4	Tuning Diagram Interpretation	1-18
1-5	Foil Installation	1-20
1-6	Select Test Menu	1-31
1-7	Data Control Dialog Box	1-33
1-8	Select UUT Part No. Dialog Box	1-33
1-9	Text Input Dialog Box (Program Initialization)	1-34
1-10	Example Test Selection Menu, Test Log Display, and Test Status Display	1-35
1-11	Test Failure Window	1-37
1-12	Test Input Dialog Box (Program Exit)	1-37
2-1	Narrow Band Sweep Spurious Emissions Spectrum Criteria	2-9
2-2	Wide Band Sweep Spurious Emissions Spectrum Criteria	2-11
3-1	Criteria for Rejection of Pulse Integrity Test	3-5
4-1	Criteria for Rejection of Pulse Integrity Test	4-5
4-2	Location of Tuning Stubs and No Tuning Areas	4-8
5-1	Criteria for Rejection of Pulse Integrity Test	5-5
5-2	Location of Tuning Stubs and No Tuning Areas	5-8
5-3	Capacitor Re-orientation	5-11

LIST OF TABLES

Number	Title	Page
1-1	UUTs Tested on PAMTS	1-2
1-2	Test Equipment and Tools Required	1-2
1-3	Consumable Material Required	1-3
1-4	Related Publications	1-6
1-5	Cleaning Contaminated Items	1-10
2-1	Consumable Material Required for PN 3D56069G01	2-2
2-2	Performance Tests for PN 3D56069G01	2-15
3-1	Consumable Material Required for PN 3D56075G01	3-2
3-2	Performance Tests for PN 3D56075G01	3-13
4-1	Consumable Material Required for PN 3D56076G01, G02	4-2
4-2	Performance Tests for PN 3D56076G01, G02	4-13
5-1	Consumable Material Required for PN 3D62739G01	5-2
5-2	Performance Tests for PN 3D62739G01	5-13

CHAPTER 1

GENERAL INFORMATION

1.1 INTRODUCTION.- This repair manual contains depot-level maintenance for the Air Route Surveillance Radar-Model 4 (ARSR-4) units under test (UUTs) tested on the Power Amplifier Module Test Set (PAMTS). In some instances, the test performed on the PAMTS UUT also tests other PAMTS subassemblies that are part of the UUT. The PAMTS automatically runs a series of performance tests which determine the operational status of the site replaceable lowest replaceable unit (LRU) under test. If the LRU fails a performance test, the operator can initiate on-line diagnostic tests to isolate faults to a defective circuit or component. A mouse, keyboard, and display provide the operator/equipment interface. Information provided in this chapter includes a list of the PAMTS UUTs tested on the PAMTS; depot repair facility requirements; lists of tools, test equipment, and consumable materials needed to test and repair the LRUs; a list of related publications; and standard shop practices that apply to the repair of the LRUs. Also provided are procedures for initializing and exiting the tests on the PAMTS, and general troubleshooting information for isolating and correcting faults on defective LRUs. Specific repair data for each of the UUTs is provided in chapters 2 through 5. The chapters are arranged in alphanumeric order by UUT part number. Repair data provided in each individual chapter includes lists of tools, test equipment, and consumable material required; information and instructions on disassembly, examination, cleaning, repair, replacement, and reassembly; operational test information; and troubleshooting information. All acronyms and abbreviations used in this manual are defined in Appendix A. Assembly drawings showing the component locations and part identification for each LRU are contained in Appendix B. Parts lists providing complete parts ordering information for each LRU are contained in Appendix C. Wiring data for applicable LRU cables is contained in Appendix D. Printed circuit track layouts are shown on assembly drawings which are contained in Appendix B. The schematic diagram and technical description for each LRU are provided in the appropriate chapter of the ARSR-4 System Site-Replaceable LRUs Schematics and Descriptions Instruction Book, TI 6340.26.

1.2 DEPOT REPAIRABLE ASSEMBLIES/SUBASSEMBLIES.- Table 1-1 contains a list of the UUTs tested on the PAMTS. The first column of the table contains the part number of the UUT. The second column contains the ARSR-4 System reference designation of the UUT, and the third column contains the name of the UUT. The fourth column lists the number of the chapter in this manual that contains the depot repair data. The fifth column identifies the chapter number of the ARSR-4 System Site-Replaceable LRUs Schematics and Descriptions Instruction Book that contains the schematic diagram and technical description for each UUT.

Table 1-1. UUTs Tested on PAMTS

Part Number	ARSR-4 System Ref Des	Name	Repair Chapter	TI 6340.26 Chapter
3D56069G01	9A2AR2, 3, 4	Preamplifier assembly	2	52
3D56075G01	9A2A6	Lookdown driver assembly	3	49
3D56076G01, G02	various	CCA, power module	4	49, 52
3D62739G01	various	CCA, power module	5	49, 52

1.3 DEPOT REPAIR FACILITY REQUIREMENTS.- There are no special depot repair facility requirements unique to any of the UUTs. Testing shall be performed at an ambient temperature of 25 (+15, -5) degrees Celsius, barometric pressure of 30 (±2) inches of mercury, and relative humidity of up to 90 percent room ambient.

1.4 TOOLS AND TEST EQUIPMENT.- The tools and test equipment required for testing, troubleshooting and maintenance of all UUTs are listed in Table 1-2. Common hand tools are not listed.

Table 1-2. Test Equipment and Tools Required

Qty	Name	Part Number/ Type/Model/Spec.	Manufacturer (CAGE)	Remarks
1	PAM Test Console Assembly	AD421401G01	Northrop Grumman (18323)	Used for UUT test and repair
1	PAM Fixture Assembly	AD421410G01	Northrop Grumman (18323)	Used for test and repair of Power Amplifier Module CCA
1	Cooling Fixture Assembly	AD421415G01	Northrop Grumman (18323)	Used for test and repair of Power Amplifier Module CCA
1	Cable Assembly, Preamp	AD421424G01	Northrop Grumman (18323)	Used for test and repair of Preamplifier Assembly
1	Cable Assembly, Lookdown Driver	AD421425G01	Northrop Grumman (18323)	Used for test and repair of Lookdown Driver Assembly
1	Phase Reference Assembly	AA421645G01	Northrop Grumman (18323)	Used for test and repair of Power Amplifier Module CCA

Table 1-2. Test Equipment and Tools Required--Continued

Qty	Name	Part Number/ Type/Model/Spec.	Manufacturer (CAGE)	Remarks
1	Cable Assembly, semi-rigid	AD421965G01	Northrop Grumman (18323)	Used for test and repair of Power Amplifier Module CCA
1	Cable Assembly, semi-rigid	AD421966G01	Northrop Grumman (18323)	Used for test and repair of Power Amplifier Module CCA

1.5 CONSUMABLE MATERIAL.- The consumable material required for the test and repair of the UUTs is listed in Table 1-3. Equivalent material may be substituted.

Table 1-3. Consumable Material Required

Name	Part Number/ Type/Model/Spec.	Manufacturer (CAGE)	Remarks
Adhesive, epoxy, dielectric, low outgassing	PDS53320LG;	Northrop Grumman (97942)	Used to mount components to a substrate or module
	DOD-A-82720, NSN 8040-01-080-1490;	Military Specifications (81349)	
	Scotchweld 2216 B/A gray, NSN 8040-00-145-0019	Minnesota Mining and Manufacturing (94960)	
Adhesive, epoxy, silver filled	M53311EQ;	Northrop Grumman (97942)	Used to mount components to a substrate or module
	Ablebond 84-1LMI NB-1, NSN 8040-01-339-8655	Ablestik Laboratories (21109)	
Adhesive, epoxy, thermally-conductive, dielectric	M53320TW;	Northrop Grumman (97942)	Used to mount components to a substrate or module
	Epo-Tek H74	Epoxy Technology (33246)	
Adhesive, silicone, rubber, RTV, clear	M45793FL;	Northrop Grumman (97942)	Used to bond and seal components on substrate or module
	MIL-A-46106, type I, clear, NSN 8040-00-225-4548;	General Services Administration (80244)	
	RTV 3145 clear, NSN 8040-00-117-8510	Dow Corning (71984)	

Table 1-3. Consumable Material Required--Continued

Name	Part Number/ Type/Model/Spec.	Manufacturer (CAGE)	Remarks
Adhesive, silicone rubber, RTV, white	M45793HB;	Northrop Grumman (97942)	Used to bond and seal components on a substrate or module
	MIL-A-46106, type I, NSN 8040-00-118-2695;	General Services Administration (80244)	
	RTV 162, NSN 8040-00-118-2695	General Electric (01139)	
Adhesive, thread-locking	M53320UA;	Northrop Grumman (97942)	Used to lock threaded hardware and threaded components to a substrate or module
	MIL-S-46163, type II, grade M, NSN 8030-01-054-3968;	General Services Administration (80244)	
	Loctite 222, NSN 8030-01-069-3046	Loctite (05972)	
Catalyst, polyamide	M54601BV;	Northrop Grumman (97942)	Used to repair surface damage to base laminates of polyamide substrates, encapsulate components on a substrate or module, and bond tuning foil on substrates
	Versamid 125, NSN 8030-00-893-4224	Miller-Stephenson Chemical (18598)	
Copper foil, electro-deposited tin-coated (tuning foil)	PDS13447CC;	Northrop Grumman (97942)	Used for substrate tuning
	PDS13447CC	Atlantic Copper and Brass (4L694)	
Cotton swab, nonsterile wooden stick, 6-inch long	M76700AB11E;	Northrop Grumman (97942)	Used for cleaning and substrate tuning
	M76700AB11E	Harwood Products	

Table 1-3. Consumable Material Required--Continued

Name	Part Number/ Type/Model/Spec.	Manufacturer (CAGE)	Remarks
Finger cot, latex	M76502DA00C (small), M76502DA00D (medium), M76502DA00E (large), or M76502DA00F (extra large);	Northrop Grumman (97942)	Used for handling clean parts
	Vesler Cot 615, size 00C small, 00D (medium), 00 E (large), or 00F (extra large)	Bittner Rubber	
Indium foil	PDS14147AA;	Northrop Grumman (97942)	Used for substrate tuning
	PDS1417AA	Indium Corp of America (74858)	
Isopropyl alcohol	TT-I-735, grade A, NSN 6810-01-136-7012	Federal Specifications (81348)	Used for general cleaning
Liquid detergent, general purpose	MIL-D-16791 NSN 7930-00-282-9699	Federal Specifications (81348)	Used for general cleaning
Primer	MIL-S-22473, grade N, NSN 8030-00-900-2373;	General Services Administration (80244)	Used to prime threaded hardware and threaded components
	HP12, NSN 8030-00-900-2373	Hernon Manufacturing (61603)	
Resin, epoxy	PDS53841AF;	Northrop Grumman (97942)	Used to repair surface damage to base laminates of polyamide substrates, encapsulate components on a substrate or module, and bond tuning foil on substrates
	Epon 828, NSN 8030-00-086-1506	Shell Oil (54527)	

Table 1-3. Consumable Material Required--Continued

Name	Part Number/ Type/Model/Spec.	Manufacturer (CAGE)	Remarks
Solder, flux cored, 60 SN/ 40 PB	M17630AV;	Northrop Grumman (97942)	Used for substrate tuning
	QQ-S-571;	Federal Specifications (81348)	
	Ersin 381	Multicore Solders (03051)	

1.6 RELATED PUBLICATIONS.- All related publications required to support the test and repair of the UUTs are listed in Table 1-4.

Table 1-4. Related Publications

Publication No.	Title	Brief Description
TI 6340.26	ARSR-4 System Lookdown Driver (from Unit 9) Site-Replaceable LRUs Schematics and Descriptions Instruction Book, Chapter 49, Volume 49	Includes detailed technical descriptions and schematics for lookdown driver PN 3D56075G01 and power module 3D56076G01, G02
	ARSR-4 System Preamplifier Assembly (from Unit 9) Site-Replaceable LRUs Schematics and Descriptions Instruction Book, Chapter 52, Volume 52	Includes detailed technical descriptions and schematics for preamplifier PN 3D56069G01 and power module 3D56076G01, G02
TI 6340.54	ARSR-4 System UUTs Tested on GENRAD Test Set Depot Maintenance Repair Manual	Includes depot-level repair data for regulator preamplifier PN 706J535G01 (p/o preamplifier assembly PN 3D56069G01) and BITE CCA PN 3D57241G01 (p/o lookdown driver PN 3D56075G01)
TI 6340.57	ARSR-4 System UUTs Tested on LLRF Test Set Depot Maintenance Repair Manual	Includes depot-level repair data for lookdown driver PN 3D56075G01 (low power tests only), output monitor PN 3D57165G01 (p/o preamplifier assembly PN 3D56069G01 and lookdown driver), and switch assembly PN 3D57264G01 (p/o lookdown driver)

Table 1-4. Related Publications--Continued

Publication No.	Title	Brief Description
TO 00-25-234	General Shop Practice Requirements for the Repair, Maintenance, and Test of Electrical Equipment	Includes standard shop practices for the repair and test of electrical equipment

1.7 STANDARD SHOP PRACTICES.- The following paragraphs provide general repair information for the UUTs tested on PAMTS. The general repair information includes unpacking and packing procedures, examination and cleaning procedures, and disassembly and reassembly information. Instructions for unique repair are given in the repair chapter applicable to the particular LRU. Refer to TO 00-25-234, General Shop Practice Requirements for the Repair, Maintenance, and Test of Electrical Equipment, for detailed information and instructions for UUT repair.

1.7.1 Unpacking.- The following paragraphs provide general procedures for unpacking UUTs when they are received at the depot. Since these units are ESD sensitive, special handling precautions are included.

1.7.1.1 Special Handling Precautions.- When not being worked on or when being transported outside of protected areas, items shall be enclosed in ESD protective packaging or contain shunting devices that short all pins to case for protection from triboelectric charging, direct contact with charged objects, and electrostatic fields.

CAUTION

This unit contains electrostatic discharge (ESD) sensitive devices. Refer to DOD-STD-1686 and DOD-HDBK-263 for proper ESD precautions to use when handling this unit. Failure to use proper ESD precautions could result in damage to ESD sensitive devices.

1.7.1.2 Unpacking Procedure.- To unpack UUTs, proceed as follows:

1. Place package to be opened on suitable work surface.

CAUTION

The UUT is packaged in a reusable container. Refer to the opening instructions placarded on the side of the container before attempting to open the container. Failure to follow instructions could result in damage to the container or to the UUT inside.

2. Using knife, carefully cut along cutline on reusable container as shown in Figure 1-1.

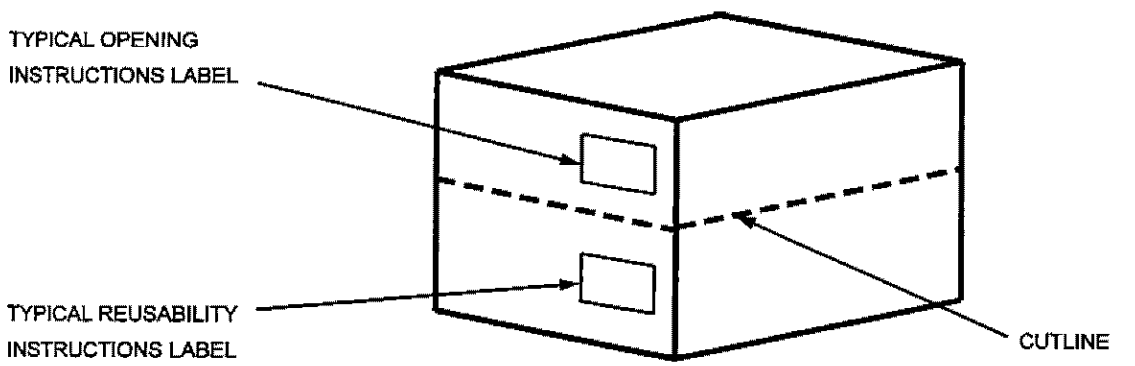

Figure 1-1. Reusable Container

3. Lift top of container. Set cover aside for later reuse.

4. Lift and remove packing material covering UUT. Set aside for later reuse.

5. Carefully lift UUT out of container and place on suitable work surface.

6. Place packing material back in container and set top in place. Set container aside for later reuse.

7. Using knife or scissors, carefully open plastic bag.

8. Remove UUT and place on suitable work surface. Save desiccant bag for later use.

9. Remove all dust caps from UUT connectors. Save dust caps for later use.

1.7.2 Packing.- The following paragraphs provide general procedures for packing tested/repaired UUTs for shipment. Since these units are ESD sensitive, special handling precautions are required.

1.7.2.1 Special Handling Precautions.- When not being worked on or when being transported outside of protected areas within a facility, items shall be enclosed in ESD protective packaging or contain shunting devices that short all pins to case for protection from triboelectric charging, direct contact with charged objects, and electrostatic fields.

CAUTION

This unit contains electrostatic discharge (ESD) sensitive devices. Refer to DOD-STD-1686 and DOD-HDBK-263 for proper ESD precautions to use when handling this unit. Failure to use proper ESD precautions could result in damage to ESD sensitive devices.

1.7.2.2 Packing Procedure.- To pack any UUT for shipping at the site, proceed as follows:

1. Place dust caps saved during unpacking on all exposed electrical connectors.
2. Pack the UUT in a protective plastic bag as follows:
   a. Insert UUT in electrostatic-protective bag saved during unpacking.
   b. Place desiccant packet saved during unpacking inside bag with UUT.
   c. Fold and tape seams, any overlaps, and folds to make the bag conform to the contours of the UUT.
   d. Tape a protective sleeve horizontally around the UUT so that the sleeve follows the contour of the unit as closely as possible; this sleeve protects the unit during cutting operations in unpacking.
3. Insert wrapped UUT in the container so that the unit fits into the same place as the unit removed during unpacking.
4. Insert top packing material over UUT. Ensure that the material fits over and conforms to the unit. The packing material should be even with the top of the container when properly installed.
5. Place cover on top of container. Secure cover to top with tape.

1.7.3 Examination.- Faulty components and other causes of a malfunctioning UUT or associated subassembly can often be detected by careful visual examination. Prior to initiating test or repair of a UUT, visually examine the unit for evidence of deterioration, overheating, loose connections, and other damage that could affect proper operation. The following paragraphs contain information for the examination of specific types of components.

1.7.3.1 Hardware and Electrical Components.- Check all hardware and electrical components for obvious damage, security of mounting, and missing parts. Replace missing parts, tighten loose components or hardware, and replace damaged components.

1.7.3.2 Cables, Wires, and Connectors.- Check the physical condition of cables, wires, and connectors for damaged insulation; loose connections; missing hardware; and bent, broken, or corroded pins or sockets. Replace cables and wires if there is evidence of frayed areas, cuts, chafing, breaks, cracks, or overheating. Tighten loose connectors or loose mounting hardware and replace connectors that are corroded or cracked. Clean, repair, or replace damaged pins or sockets of connectors.

1.7.3.3 Placards and Markings.- Inspect placards and markings for legibility and missing items. Remove and replace damaged or illegible placards or markings.

1.7.4 Cleaning.- The exposed surfaces of LRUs and associated subassemblies should be cleaned prior to initiating test or repair if there is evidence of contamination or accumulation of foreign matter. After repair is completed, the reworked areas should be cleaned to remove any fingerprints, compound residue, or other types of contaminants. The following paragraphs contain information for cleaning both moderately contaminated items and highly contaminated items.

1.7.4.1 Cleaning Moderately Contaminated Items.- Use the cleaning techniques contained in Table 1-5 to clean moderately contaminated items.

Table 1-5. Cleaning Contaminated Items

Type of Contamination	Cleaning Technique
	CAUTION The use of cleaning agents containing solvents or abrasives can damage the equipment.
Grime and fingerprints	Wipe clean using soft lint-free cloth or paper towel moistened with mild detergent/solution [e.g., general purpose liquid detergent MIL-D-16791 (NSN 7930-00-282-9699)]. Do not use solvents.

Table 1-5. Cleaning Contaminated Items--Continued

Type of Contamination	Cleaning Technique
	********** * **WARNING** * ********** Compressed air used for cleaning can create airborne particles that may enter the eyes. Goggles must be worn to protect eyes from injury.
	CAUTION The use of cleaning agents containing solvents or abrasives can damage the equipment.
Dust and dirt	Blow with compressed air of suitable pressure. If necessary, use soft bristle brush to loosen lodged particles.
Oil and grease	Using disposable paper towel, remove as much oil or grease as possible. Finish cleaning by wiping area with soft lint-free cloth or paper towel moistened with mild detergent/solution [e.g., general purpose liquid detergent MIL-D-16791 (NSN 7930-00-282-9699)].
Loose solder and metal filings	Vacuum or brush away loose, spattered, or excess solder or metal filings.
Rust, corrosion, or other oxidation	Using disposable paper towel, remove as much oil or grease as possible. Finish cleaning by wiping area with soft lint-free cloth or paper towel moistened with mild detergent/solution [e.g., general purpose liquid detergent MIL-D-16791 (NSN 7930-00-282-9699)].

1.7.4.2 Cleaning Highly Contaminated Items.- To clean highly contaminated items, use the cleaning techniques contained in Table 1-5 and the following additional techniques:

CAUTION

Exercise care when using sharp or pointed instruments which can cut or puncture metal foil wiring tracks on CCAs.

1. Using a dental chisel or dental scaler, dislodge and scrape hardened materials such as epoxy adhesive. A soldering iron can also be used to dissolve hardened materials.

****
*** WARNING ***
****

Isopropyl alcohol is flammable and toxic. Keep sparks and flames away. Avoid prolonged breathing of vapor and use adequate ventilation to prevent bodily injury, physical disorder, or death.

2. Using a fresh cotton swab, soft lint-free cloth, or soft bristle brush moistened with isopropyl alcohol, TT-I-735, grade A (NSN 6810-01-136-7012), clean highly contaminated surfaces. Do not allow isopropyl alcohol to drip, splash, or run on electrical components adjacent to the reworked area.

1.7.5 Disassembly and Reassembly.- This paragraph contains general information for the disassembly and reassembly of LRUs and the removal and replacement of their associated subassemblies and parts. The LRUs and associated subassemblies should only be disassembled to the extent needed to access an area for adjustment, cleaning, part replacement, or repair. Refer to TO 00-25-234, General Shop Practice Requirements for the Repair, Maintenance, and Test of Electrical Equipment, for general information on removing and replacing standard discrete components (resistors, capacitors, coils, etc.), integrated circuits, and components soldered on CCAs.

CAUTION

This unit contains electrostatic discharge (ESD) sensitive devices. Refer to DOD-STD-1686 and DOD-HDBK-263 for proper ESD precautions to use when handling this unit. Failure to use proper ESD precautions could result in damage to ESD sensitive devices.

1.7.5.1 Electrostatic Discharge (ESD) Precautions.- The UUTs contain parts that are sensitive to ESD. The ESD warning marker shown above is applied to UUTs that contain ESD sensitive devices. ESD cautions also appear on the assembly drawings in Appendix B; ESD sensitive components are identified in the parts lists in Appendix C by an "E" code in the SYM (Symbol) column. Strictly adhere to the ESD precautionary measures as stated above before attempting to perform any procedure.

1.7.5.2 Component Location.- Refer to the assembly drawings in Appendix B and parts lists in Appendix C for the identification and location of components and attaching hardware.

1.7.5.3 Wire Removal.- Refer to the UUT wiring diagrams and wire lists in Appendix D and identify all wire terminations before disconnecting or unsoldering wires. Tag all wires that are disconnected.

1.7.5.4 Component Mounting.- The maximum allowable height of components above the CCA surface is specified on the associated assembly drawing in Appendix B.

1.7.5.5 Threaded Hardware and Component Mounting.- All threaded hardware and threaded components shall be firmly secured so there is no relative movement between attached parts. Lock washers shall be flattened fully.

1.7.5.6 SMA Connector Torqueing.- The coupling nuts of coaxial SMA connectors shall be torqued to 7 to 10 inch-pounds using a 5/16-inch SMA-connector torque wrench (Applied Specialties R282-320 or equivalent). The torque wrench is preset to a recommended torque value of 8 inch-pounds. After a connector is torqued, a torque stripe shall be applied to the connection using red enamel paint (MIL-E-22118) and a size 0 artist's brush. The torque stripe shall extend from the coupling nut to the body of the receptacle.

1.8 REPAIR NOTES.- The following paragraphs provide information on the repair of the UUTs tested on the PAM test set. This information includes the tuning of RF circuits using a tuning wand; the preparation and installation of indium foil and foil tuning strips; and the preparation and use of epoxy and other adhesives to mount foil strips and components.

1.8.1 General RF Tuning Procedure.- This paragraph provides a generalized tuning procedure for tuning the power amplifier modules. Tuning substrates is a skill that is developed by the technician with experience accumulated over a period of time. In general, tuning consists of using a tuning wand which is placed over the tuning circuit strips on the substrate. Tuning wands can be fabricated locally using silver conductive epoxy adhesive bonded to the end of a wooden cotton swab as shown in Figure 1-2. As the tuning wand is moved in the area where foil is to be placed, the effect on circuit performance is determined. When a location that enhances circuit performance is located, indium foil is placed across the tuning stub(s) or circuit path(s) to the main circuit path. Then, the process is repeated until all stages are tuned for optimum output. After tuning is completed, the indium foil is removed and a piece of tuning foil (same size as that removed) is soldered in place of the indium foil. After each replacement of foil, the characteristics of the unit are checked and, if required, further tuning is performed. For each unit tuned, the UUT test identifies the location of the tuning areas and the parameter(s) affected by tuning in those areas. A step-by-step generalized procedure is as follows:

1. Set up test equipment for the appropriate test.
2. Turn on equipment.
3. Follow procedure for equipment being tuned. The procedure indicates areas to be tuned and the parameter(s) affected by tuning in those areas.
4. Place the tuning wand on potential areas for foil placement and determine effect on circuit performance. Locate areas that improve performance.
5. Remove power from unit being tuned.
6. Remove dc power from unit being tuned.
7. Place indium foil over areas that improve performance.
8. Secure foil with pressure.
9. Restore dc power to unit being tuned.
10. Restore power to unit being tuned.
11. Determine if further tuning is required.
12. If further tuning is required, repeat steps 4 through 11.
13. If further tuning is not required, remove power and dc power from unit being tuned.

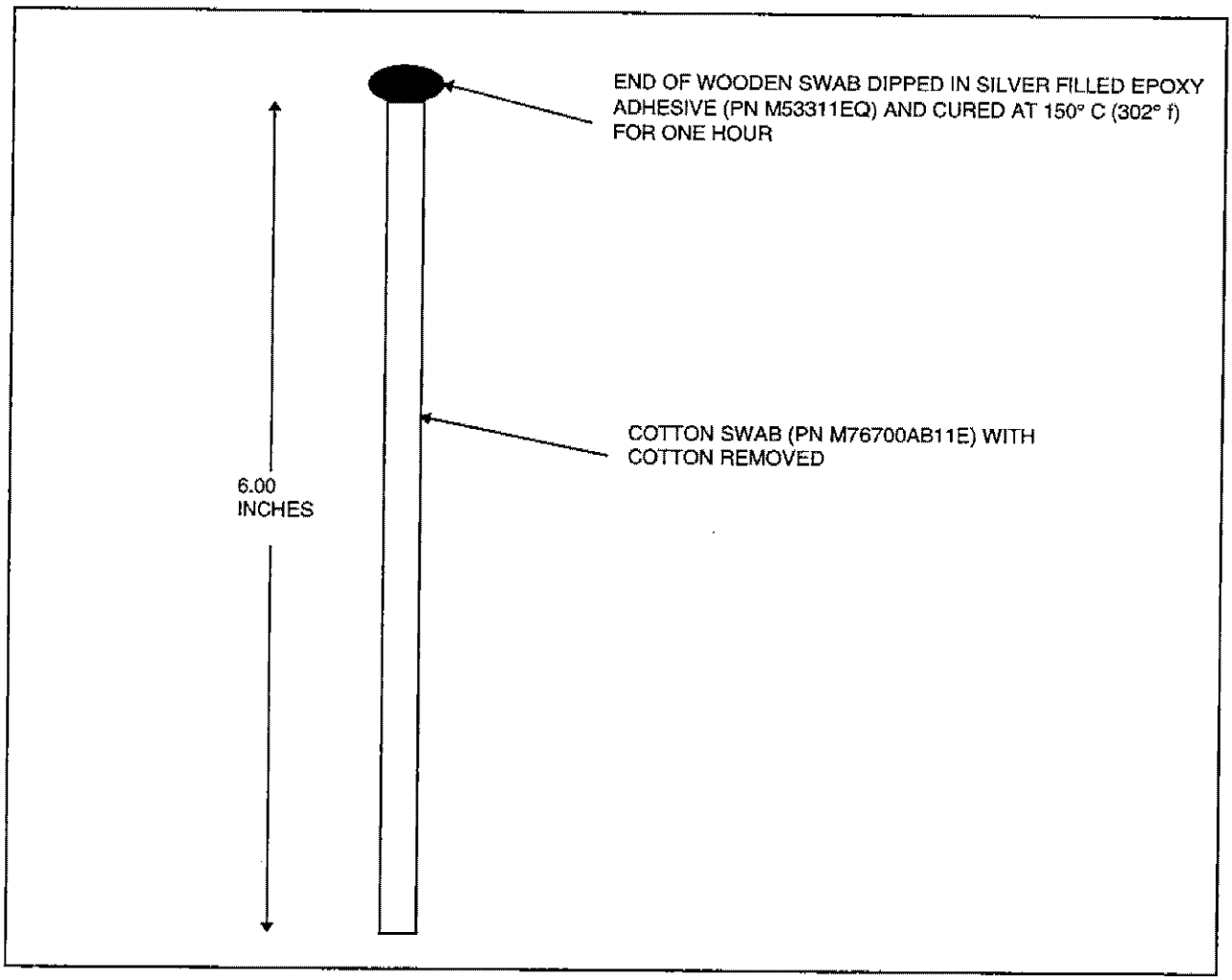

Figure 1-2. Tuning Wand Fabrication

NOTE

The following steps are performed until all indium foil is replaced by tuning foil.

14. In a given area, note the size and location of the indium foil. Cut tuning foil to the exact size noted. Remove the indium foil from the substrate. Install the tuning foil in the exact location of the indium foil. (If more than one indium foil strip is adjacent to another, note the overall size and location. Cut a tuning strip to the overall size of the indium foil strips and remove the indium foils from the substrate. Install the tuning foil in the exact location of the indium foil.)

15. Solder foil in place.

16. Restore dc power to unit being tuned.

17. Restore power to unit being tuned.

18. Check performance of unit. If further tuning is required, go to step 4. If further tuning is not required, ensure that all indium foil has been replaced with tuning foil and go to step 19.

19. Remove RF power from unit being tuned.

20. Remove dc power from unit being tuned.

****
*** WARNING ***
****

Isopropyl alcohol is flammable and toxic. Keep sparks and flames away. Avoid prolonged breathing of vapor and use adequate ventilation to prevent bodily injury, physical disorder, or death.

21. Using cotton swabs (M76700AB11E) moistened with isopropyl alcohol, TT-I-735, grade A (NSN 6810-01-136-7012), clean resin from areas of foil soldered.

1.8.1.1 Tuning Diagram.- The sample tuning diagrams, Figure 1-3 and Figure 1-4, identify tuning areas and parameters (e.g., power and rise time) affected by tuning. On the diagrams, tuning areas are identified by circles and recommended foil placement locations are identified by dotted lines. These are recommendations; with experience the technician may deviate from them as he sees fit. In areas where several adjacent foils are recommended for tuning, the diagrams show adjacent dotted areas. Tuning stubs, shown on the diagram but not identified for tuning purposes, may be used. These areas are not normally used during tuning.

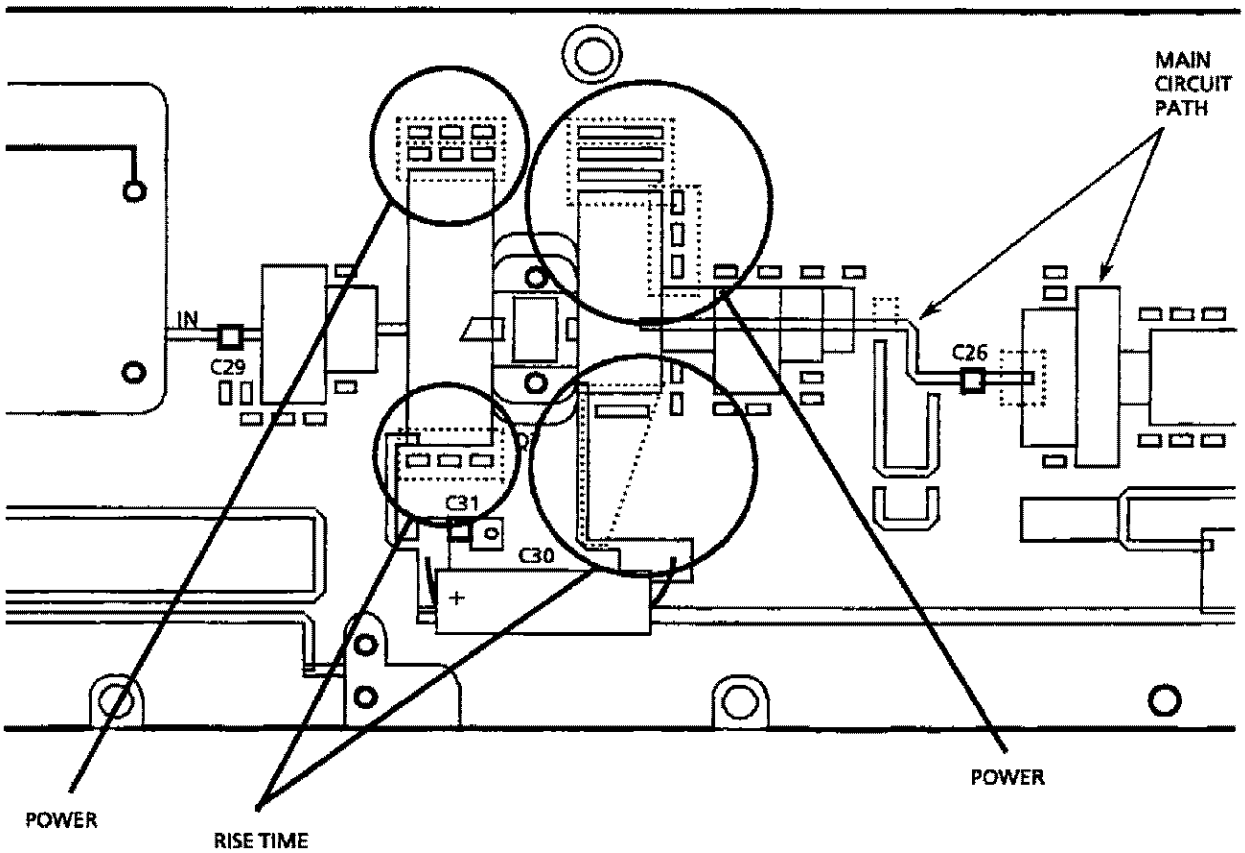

Figure 1-3. Sample Tuning Diagram

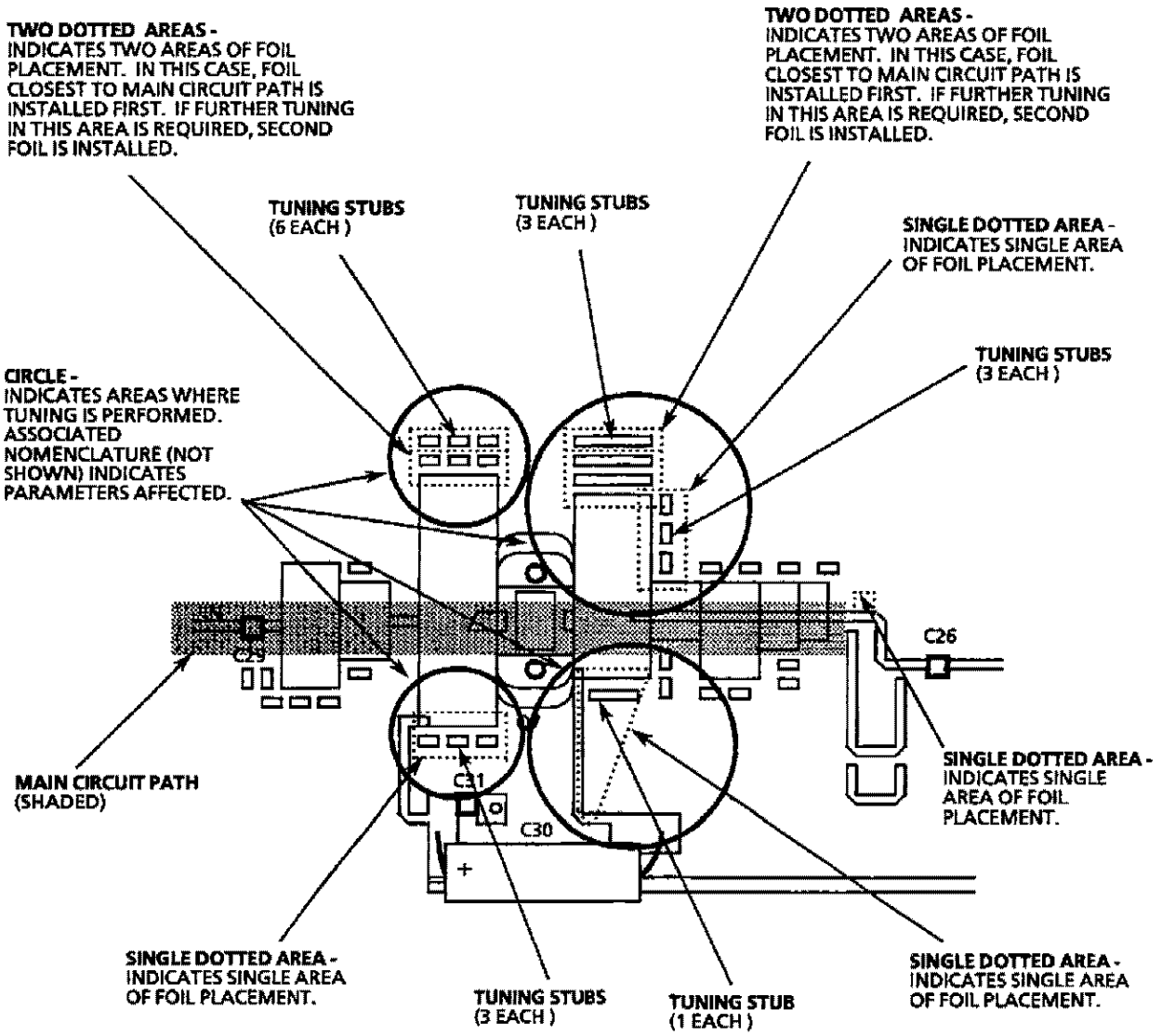

Figure 1-4. Tuning Diagram Interpretation

1.8.1.2 Tuning Procedure.- During tuning in a given tuning area, the tuning wand is placed on the foil placement locations across the tuning stubs and the main circuit path conductor or across legs of the circuit path. The effect on circuit performance is then determined. When it is determined that foil at a given location will improve performance, a temporary indium foil is placed at that location. This process is repeated until the response of the unit meets the desired requirements. When foil placement locations are adjacent to one another, tuning is performed by placing foil at one of the locations identified and, if further tuning in the area is required, foil is placed in the adjacent location(s). During the placement of foil, keep in mind that the foil is always added from the main circuit path conductor to the tuning stubs. Therefore, when adding adjacent strips of tuning foil that are located further and further from the main circuit path, tuning foil must first be added between the main circuit path conductor and the tuning stub(s). If a second strip of tuning foil is to be added adjacent to that location, it is added between the second tuning stub(s) and the foil previously added.

1.8.1.3 General Foil Installation.- Foil installation consists of two types of installation. First indium foil is installed. This is a temporary foil installation which is used to determine the best placement of foil for optimum unit performance. Then, the indium foil is removed and replaced by tuning foil which is permanently installed by soldering. Figure 1-5 provides various illustrations on the installation of foil. These illustrations provide examples of different types of foil installation. The examples pertain to both indium foil and tuning foil installation. However, indium foil is not soldered. Soldering instructions pertain to tuning foil installation only. These examples are provided as a guide to provide the technician with an overview of the foil installation procedure in various situations. As a result, the technician will have a guide to perform the various tuning foil installations encountered. The technician may vary the size and number of foils used. In cases where more than one foil is used, the technician may decide what the order of placement shall be. It must be kept in mind that tuning foil must always be electrically connected to the circuit path. In particular, when tuning foil is connected between tuning stubs (which are electrically isolated), foil must also be connected to the circuit path. Tuning stubs cannot be just connected to one another. The tuning foil must overlap each conductor (tuning stub or circuit path) by at least 0.015 inch and must be soldered along the edges of each conductor. When several indium foils have been placed adjacently on the substrate, the tuning foil should be cut to the overall size of the indium foils. Then, the indium foils are removed and the single tuning foil is soldered in their place. The following paragraphs contain procedures for the preparation and installation of indium foil and tuning foil.

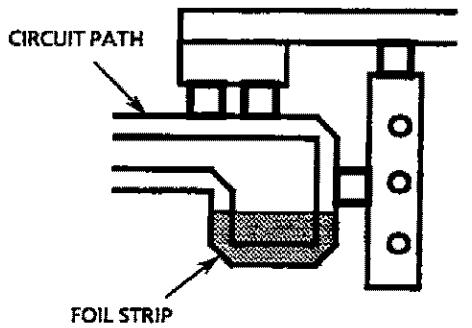

ILLUSTRATION A

Illustration A shows indium foil installed across a leg in the circuit path. The overlap of foil at all intersections with conductors or foil shall be 0.015 inch minimum. The foil is trimmed to conform to the outer edges of the conductors. The tuning foil is soldered along the circuit path edges.

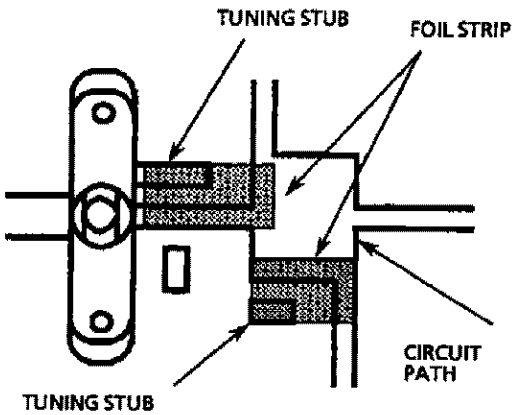

ILLUSTRATION B

Illustration B shows two indium foils installed. The overlap of foil at all intersections with conductors or foil shall be 0.015 inch minimum. This would be a case where one foil is added and a second foil is then added to obtain the desired results. In both areas, foil is installed between the circuit path and the nearby tuning stub. Several small strips of foil could be used in each area until the optimum results are achieved. The foil is trimmed to conform to the edges of the conductors. The tuning foil is soldered along the tuning stubs and along the circuit path.

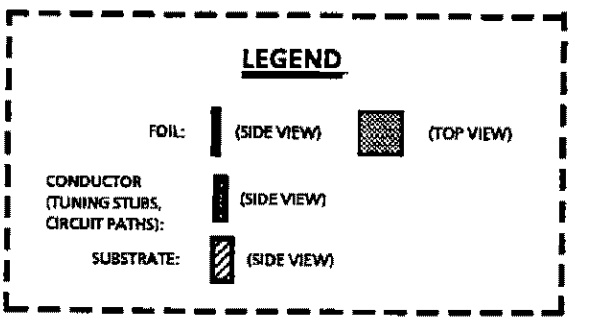

Figure 1-5. Foil Installation (Sheet 1 of 3)

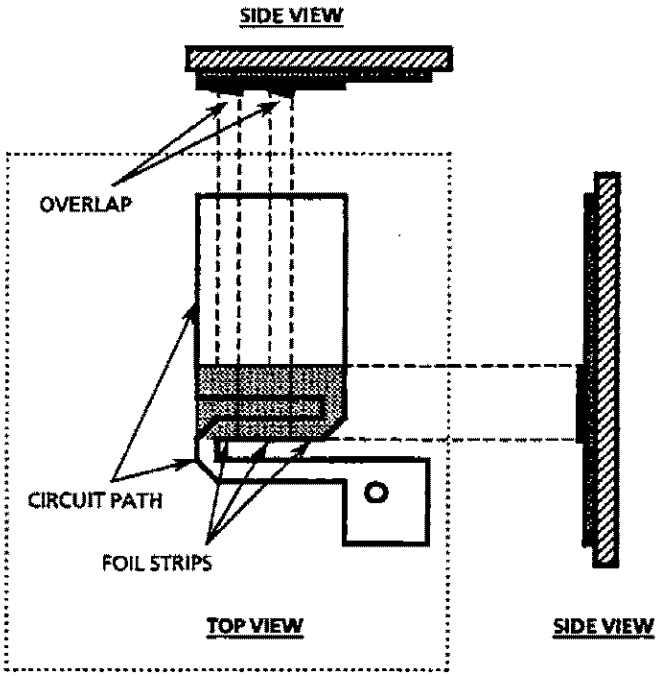

THREE ADJACENT FOIL STRIPS INSTALLED

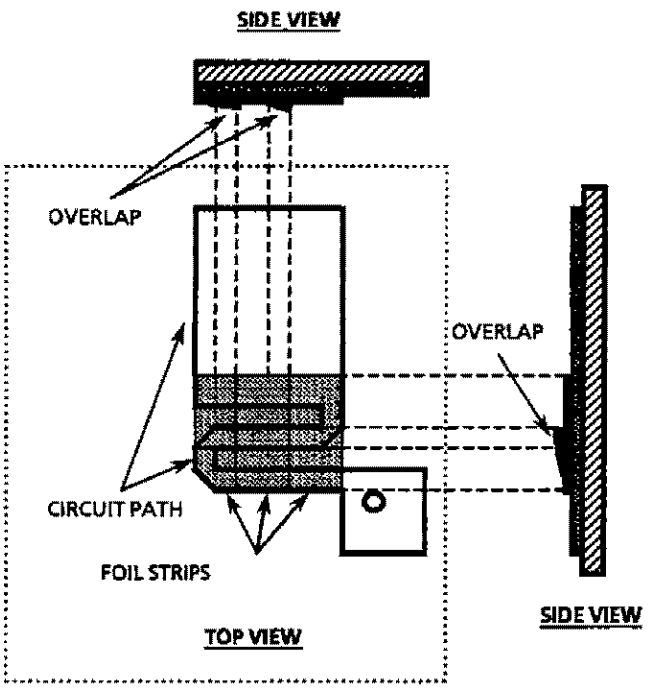

SIX ADJACENT FOIL STRIPS INSTALLED

ILLUSTRATION C

Illustration C shows multiple indium foils installed across a leg in the circuit path. The overlap of foil at all intersections with conductors or foil shall be 0.015 inch minimum. First, the foils are installed between the top circuit path leg and the center circuit path leg. Then, the foils are installed between the center circuit path leg and the bottom circuit path leg. It is important that the foils overlap as shown. The foil is trimmed to conform to the outer edges of the conductors. When soldering tuning foil, it is important that the foils be soldered at the center circuit path leg as well as the bottom leg or top leg.

Figure 1-5. Foil Installation (Sheet 2 of 3)

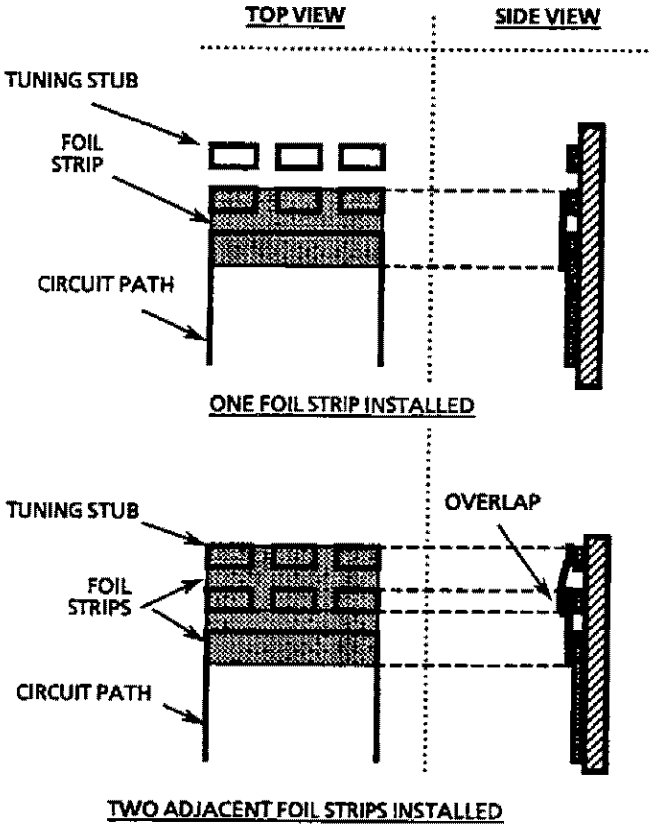

ILLUSTRATION D

Illustration D shows two adjacent indium foils installed. The overlap of foil at all intersections with conductors or other foils shall be 0.015 inch minimum. First, the foil from the circuit path to the tuning stubs is installed. This foil is trimmed to conform to the outer edges of the conductors and soldered at the circuit path tab and at the three tuning stubs. Then, foil is installed overlapping the foil previously installed and extending to the second row of tuning stubs. The foil is trimmed to conform to the outer edges of the conductors. The tuning foil is soldered at the overlap and at the tuning stubs.

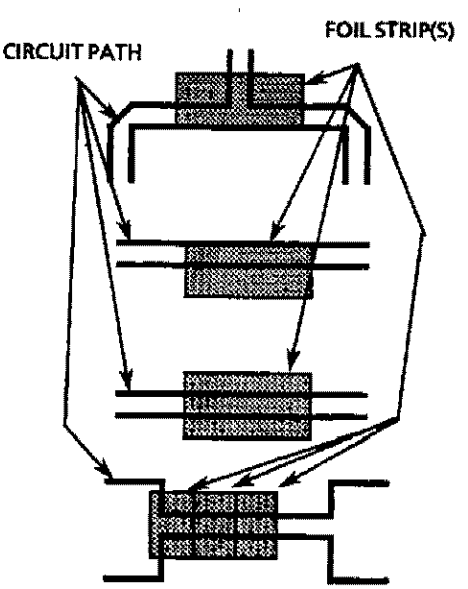

ILLUSTRATION E

Illustration E shows various types of indium foil installations. The overlap of foil at all intersections with conductors or other foils shall be 0.015 inch minimum. Unsupported sections of tuning foil greater that 0.19 inch shall be secured with epoxy adhesive. The tuning foil is soldered at the overlap and at the tuning stubs.

Figure 1-5. Foil Installation (Sheet 3 of 3)

1.8.1.3.1 Indium Foil Preparation and Installation.- The following procedure describes the preparation and installation of indium foil (PDS14147AA) on the assembly being tuned. Proceed as follows:

1. Remove power from unit.

2. Remove dc power from unit.

****
*** WARNING ***
****

Isopropyl alcohol is flammable and toxic. Keep sparks and flames away. Avoid prolonged breathing of vapor and use adequate ventilation to prevent bodily injury, physical disorder, or death.

3. Using cotton swabs (M76700AB11E) moistened with isopropyl alcohol [TT-I-735, grade A (NSN 6810-01-136-7012)], clean foil.

4. Lightly burnish both sides of foil with swab.

NOTE

Handle all cleaned foil with tweezers or a finger cot.

5. Lightly roll cleaned foil with suitable round clean tool until foil is smooth and flat.

NOTE

The foil shall have a minimum overlap of 0.015 inch over the circuit conductors or other foil. The periphery of the foil shall be within 0.010 inch of the substrate surface.

6. Using sharp straight-edge, cut foil to desired size and shape.

7. Using cotton swabs moistened with isopropyl alcohol, clean conductor pad(s), tuning stub(s), etc. that will be affected during foil installation.

8. Using tweezers, place foil on circuit area requiring foil.

9. Using wooden end of cotton swab, lightly press foil into substrate metalization or solder joint and progressively press the rest of the foil into the bare substrate.

10. Trim away excess foil, as necessary, to obtain desired results.

11. Using wooden end of cotton swab, firmly press or tap on foil to form the film into the conductor and bare substrate until the foil deforms to 1-1/2 times the original size.

12. Trim away excess foil as necessary.

1.8.1.3.2 Indium Foil Removal.- The following procedure describes the removal of indium foil on the assembly being tuned.

1. Remove power from unit.

2. Remove dc power from unit.

3. Using wooden end of cotton swab, lift and remove foil.

1.8.1.3.3 Tuning Foil Preparation and Installation.- The following procedure describes the preparation and installation of tuning foil (PDS13447CC) on the assembly being tuned. Proceed as follows:

1. Remove RF power from unit.

2. Remove dc power from unit.

****
*** WARNING ***
****

Isopropyl alcohol is flammable and toxic. Keep sparks and flames away. Avoid prolonged breathing of vapor and use adequate ventilation to prevent bodily injury, physical disorder, or death.

3. Using cotton swabs (M76700AB11E) moistened with isopropyl alcohol, TT-I-735, grade A (NSN 6810-01-136-7012), clean foil.

NOTE

The foil shall have a minimum overlap of 0.015 inch over the circuit conductors. The periphery of the foil shall be within 0.010 inch of the substrate surface.

4. Cut to required size as previously determined. Tuning foil having an unsupported portion greater than 0.190 inch shall be supported by epoxy adhesive [epoxy resin (PDS53841AF) and polyamide catalyst (M54601BV)].

5. Tin the foil using 60-40 flux cored solder (M17630AV).

6. Place foil over area of circuit.

7. Solder foil using 60-40 flux cored solder.

****
*** WARNING ***
****

Isopropyl alcohol is flammable and toxic. Keep sparks and flames away. Avoid prolonged breathing of vapor and use adequate ventilation to prevent bodily injury, physical disorder, or death.

8. Using cotton swabs moistened with isopropyl alcohol, clean resin from areas of foil soldered.

1.8.2 Application of Low Outgassing Dielectric Epoxy Adhesive (PDS53320LG).- Perform the following procedure to support or mount components, wires, etc. to a substrate or module using low outgassing dielectric epoxy adhesive (PDS53320LG).

1. If necessary, clean mounting surfaces per instructions in paragraph 1.7.4. Surfaces to be bonded shall be free of oil, grease, mold release agents, and other contamination prior to application of adhesive.

****
*** WARNING ***
****

Epoxy adhesive is toxic and a skin irritant. Avoid prolonged breathing of vapor or fumes, use adequate ventilation, and avoid prolonged or repeated skin contact to prevent injury, physical disorder, or death.

2. Obtain low outgassing dielectric epoxy adhesive. Mix by volume 2 parts epoxy resin with 3 parts catalyst. Mix solution thoroughly to prevent uneven application. The pot life of the mixture is 1 hour.

3. If mounting a component, apply uniform coat of adhesive to mating surface of component and mating surface of item that component is being mounted on (e.g., substrate or module). The supporting adhesive for surface mounted components shall have a minimum fillet height of one-quarter the height of the component body or 2.54 mm (0.100 inch), whichever is smaller and be applied along at least 50 percent of the component length of width. Where substrate design or space limitations make 50 percent coverage impossible, support remaining area with adhesive. The supporting adhesive for thru-hole mounted devices shall be applied along at least 50 percent of the bond interface. Where substrate design or space

limitations make 50 percent coverage impossible, support remaining area with adhesive. Adhesive supports shall not exceed the height requirement of the substrate.

4. Mount component and press down firmly on component. If applicable, solder component to substrate.

5. If supporting a component, wire, etc., position item to be supported and apply adhesive. A single wire or coax cable shall be locally encapsulated with adhesive for a minimum of 1.27 mm (0.050 inch). An adhesive fillet shall support wire bundles and laced bundles to a minimum of one-half of the bundle diameter. Encapsulating adhesive shall completely cover wires in a groove. The adhesive shall fill the groove to within 0.127 mm (0.005 inch) of the top of the groove and not extend above the groove.

6. Allow adhesive to cure for 24 hours at room temperature.

1.8.3 Application of Silver Filled Epoxy Adhesive (M53311EQ).- Perform the following procedure to mount components to a substrate or module using silver filled epoxy adhesive (M53311EQ).

NOTE

Silver conductive adhesive M53311EQ
supersedes M53311DQ.

1. If necessary, clean mounting surfaces per instructions in paragraph 1.7.4. Surfaces to be bonded shall be free of oil, grease, mold release agents, and other contamination prior to application of adhesive.

****
* **WARNING** *
****

Epoxy adhesive is toxic and a skin irritant. Avoid prolonged breathing of vapor or fumes, use adequate ventilation, and avoid prolonged or repeated skin contact to prevent injury, physical disorder, or death.

2. Obtain silver filled epoxy adhesive.

3. Apply uniform coat of adhesive to mating surface of component and mating surface of item that component is being mounted on (e.g., substrate or module). A fillet of adhesive shall be formed around 100 percent of a module mounted pin or post. Chip components mounted with a conductive adhesive for electrical connection shall have adhesive visible for a minimum of 75 percent of the mating surfaces.

4. Mount component and press down firmly on component.

5. Cure adhesive at 150°C (302°F) for 1 hour.

1.8.4 Application of Dielectric Thermally-Conductive Epoxy Adhesive (M53320TW).- Perform the following procedure to mount components to a substrate or module using dielectric thermally-conductive epoxy adhesive (M53320TW).

1. If necessary, clean mounting surfaces per instructions in paragraph 1.7.4. Surfaces to be bonded shall be free of oil, grease, mold release agents, and other contamination prior to application of adhesive.

****
*** WARNING ***
****

Epoxy adhesive is toxic and a skin irritant. Avoid prolonged breathing of vapor or fumes, use adequate ventilation, and avoid prolonged or repeated skin contact to prevent injury, physical disorder, or death.

2. Obtain dielectric thermally-conductive epoxy adhesive. Mix by weight 10 parts epoxy resin with 0.3 parts catalyst. Mix solution thoroughly to prevent uneven application. The pot life of the mixture is 4 hours.

3. Apply uniform coat of adhesive to mating surface of component and mating surface of item that component is being mounted on (e.g., substrate or module). The supporting adhesive for surface mounted components shall have a minimum fillet height of one-quarter the height of the component body or 2.54 mm (0.100 inch), whichever is smaller and be applied along at least 50 percent of the component length of width. Where substrate design or space limitations make 50 percent coverage impossible, support remaining area with adhesive. Adhesive supports shall not exceed the height requirement of the substrate.

4. Mount component and press down firmly on component. If applicable, solder component to substrate.

5. Cure adhesive at 100° C (212° F) for 20 minutes.

1.8.5 Application of White RTV Silicone Rubber Adhesive (M45793HB) or Clear RTV Silicone Rubber Adhesive (M45793FL).- Perform the following procedure to bond or seal components on a substrate or module using white RTV silicone rubber adhesive (M45793HB) or clear RTV silicone rubber adhesive (M45793FL).

1. If necessary, clean mounting surfaces per instructions in paragraph 1.7.4. Surfaces to be bonded or sealed shall be free of oil, grease, mold release agents, and other contamination prior to application of adhesive.

2. Obtain white RTV silicone rubber adhesive or clear RTV silicone rubber adhesive.

3. If bonding components, use small bristle brush to apply uniform coat of adhesive to mating surfaces of components being bonded together. The bond line thickness shall be 0.3 to 13 millimeters (0.012 to 0.5 inch) and the maximum width of the bond line shall be 25 millimeters (1 inch). Apply sufficient pressure to ensure good contact between mating surfaces. If using RTV silicone rubber adhesive as a sealing compound, assemble components and then use a small bristle brush to apply uniform coat of adhesive.

4. Cure adhesive for 2 days at room temperature. Allow adequate ventilation because the adhesive cures by exposure to moisture in the air.

1.8.6 Application of Thread-Locking Adhesive (M53320UA or M53320UC).- Perform the following procedure to lock threaded hardware and threaded components to a substrate or module using thread-locking adhesive (M53320UA or M53320UC).

1. If necessary, clean threads of hardware or component to be mounted and the mating surface of the item receiving the threaded hardware or component (e.g., substrate or module) per instructions in paragraph 1.7.4. Surfaces shall be free of oil, rust, scale, or other foreign material which would interfere with the adhesion of the compound to the metal substrate. Allow surfaces to air dry.

2. Apply primer (MIL-S-22473) to threads of hardware or component to be mounted. Allow primer to cure for 15 minutes.

****
*** WARNING ***
****

Thread-locking adhesive M53320UA is toxic and a skin irritant. Avoid prolonged breathing of vapor or fumes, use adequate ventilation, and avoid prolonged or repeated skin contact to prevent injury, physical disorder, or death.

Thread-locking adhesive M53320UC is flammable, toxic, and a skin irritant. Keep sparks and flames away, avoid prolonged breathing of vapor or fumes, use adequate ventilation, and avoid prolonged or repeated skin contact to prevent injury, physical disorder, or death.

3. Apply uniform coat of thread-locking adhesive M53320UA or M53320UC to threads of hardware or component.

4. Mount threaded hardware or threaded component.

5. Cure thread-locking adhesive at room temperature for 1 hour. The assembly may be handled after 15 minutes.

1.9 TYPICAL TEST PROCEDURE.- The following paragraphs contain instructions for initializing and exiting the Test Executive Program for running the performance and diagnostic tests on the UUTs tested on the PAMTS. The computer typographic conventions used in the test procedures are also described.

1.9.1 Computer Typographic Conventions.- This manual uses several document and keyboard conventions to convey certain actions to the reader. The conventions used in this manual are as follows:

Boldface type: Indicate to the user the availability of a menu or dialog box selection that requires an action such as clicking on it with the cursor through mouse movements or selecting it via the tab key.

Example:

In the Select Test window, click the **Data** button where the Data button is a command button in the Select Test window.

Italicized type: Used for user input.

Example:

The user is directed to change from the root directory to the test directory. The text appears as follows:

At the C prompt, type *cd \test* and press <ENTER>.

The user types in the italicized text via the keyboard to change to the test directory.

Bracketed text: During test set use, the user may be directed to press specific keys to initiate a test set function or action. Pressing the keys is known as keyboard commands. The keyboard commands are bracketed by the <> symbols.

Example:

In the previous example, the word ENTER was bracketed by the <> symbols. The ENTER key is a named key on the keyboard. When the ENTER key is pressed, it informs the test set to read the keyboard input and perform the action of switching to the test directory.

If the user is required to press two or more keys simultaneously, the key names are bracketed and separated by dashes. Pressing the Ctrl key and the R key is indicated in text as <Ctrl-R>. These are typical examples of how the <> symbols are used in this manual.

1.9.2 Test Executive Program Initialization.- Perform the following procedure to initialize the Test Executive Program for all UUT tests:

1. Ensure that PAMTS power is on and that all equipment in the console and computer/controller workstation is operating.

2. At the computer/controller workstation, log into the user account, if required, and run Microsoft Windows. Unless otherwise specified, all actions on the computer/controller workstation are made using the mouse.

3. In the Program Manager window, double-click the **PAMTS** icon to load the Test Executive Program for the PAMTS. When loading is completed, the Start Test Exec button is displayed on the screen.

4. Click the **Start Test Exec** button to start the Test Executive Program. The Select Test Menu, Figure 1-6 is displayed.

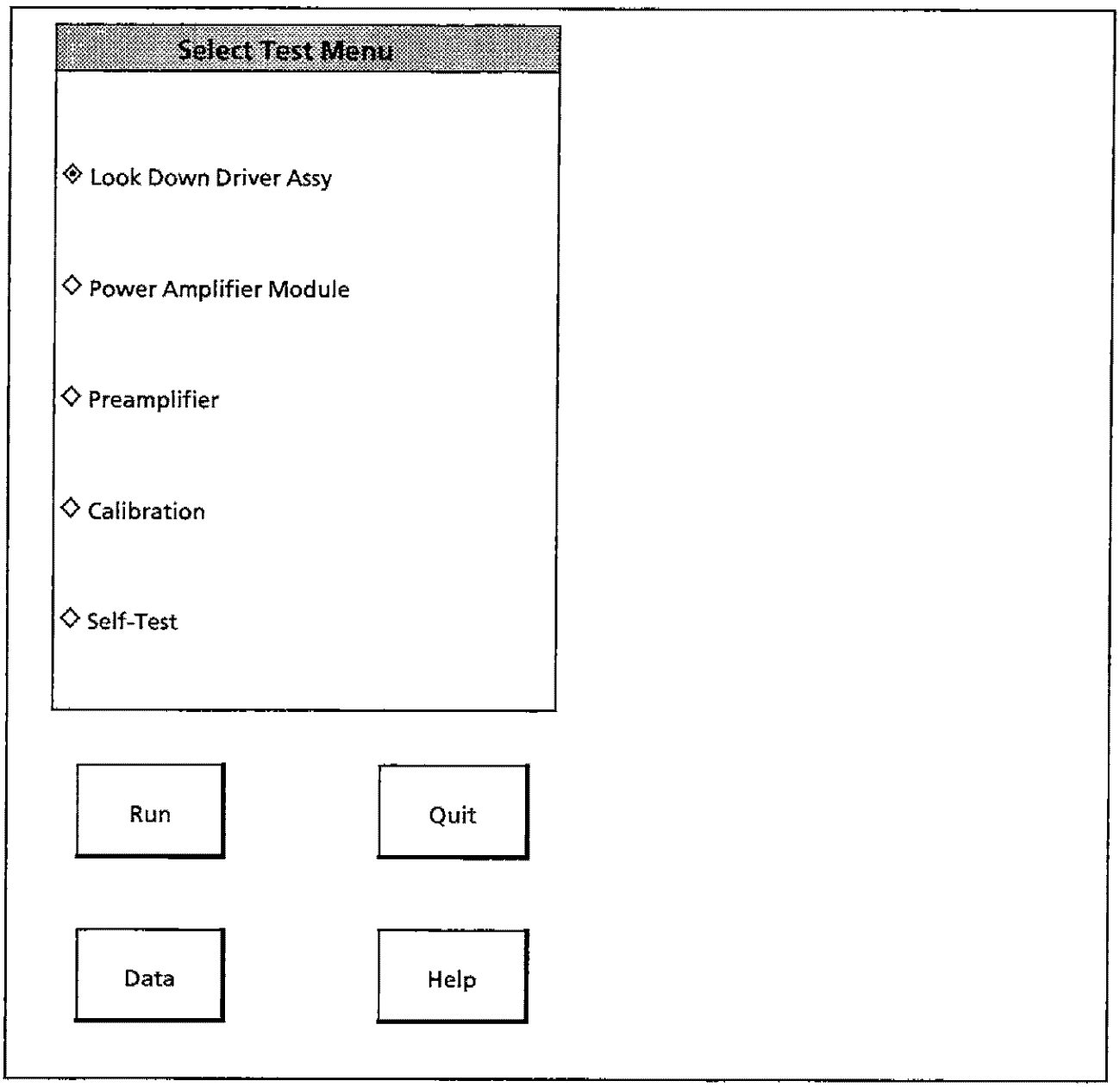

Figure 1-6. Select Test Menu

5. In the Select Test Menu window, click the **Data** button to open the Data Control Dialog Box, Figure 1-7. If the button is not in the viewing area, ensure that the window is maximized. If necessary, change the CRT resolution to 1280 x 1024 mode.

6. In the Data Logging Mode box, select the desired data logging mode. Click the **Press When Done** button to close the Data Control dialog box.

7. In the Select Test Menu, Figure 1-6, select the desired UUT test to be run and click the **Run** button. The Select UUT Part No. Dialog Box, Figure 1-8, is displayed.

8. The Select UUT Part No. box lists the default part number for the UUT corresponding to the test selected in step 7. If more than one part number is listed for a particular test, select the appropriate UUT part number that is to be recorded in the test data base and click the **OK** button. The Text Input Dialog Box (Program Initialization), Figure 1-9, is displayed.

9. In the Text Input box, type operator ID that is to be recorded in the test data base and click the **OK** button.

10. In the Text Input box, type UUT serial number that is to be recorded in the test data base and click the **OK** button.

11. In the Text Input box, type job number that is to be recorded in the test data base and click the **OK** button. A Test Selection Menu, Test Log Display, and other test status items are displayed (see Figure 1-10). In Figure 1-10, the Power Amplifier Assy is shown, for example.

12. In the Test Mode drop-down box, select the desired mode (**PAUSE On Fail**, **CONTINUE On Fail**, **LOOP On Fail**, or **Halt On Fail**).

13. In the Test Range test status display, observe the numbers displayed in the First, Last, Current, and Repeat boxes. The numbers in the First and Last boxes correspond to the performance test numbers listed in the Test Selection Menu located below. The UUT test only runs the sequence of tests specified in the First and Last boxes. The number shown in the Repeat box represents the number of times the test is repeated. The numbers are changed by clicking on the respective buttons located below the display boxes. When a button is selected, a pop-up dialog box appears for entry of the desired number. After the desired number is entered, clicking the **OK** button in the pop-up dialog box executes the change. The Current box displays the test number that is currently running and does not have a corresponding button. Enter the desired numbers in the First, Last, and Repeat boxes.

14. In the Test Selection Menu window, click the **Run** button to initiate the test.

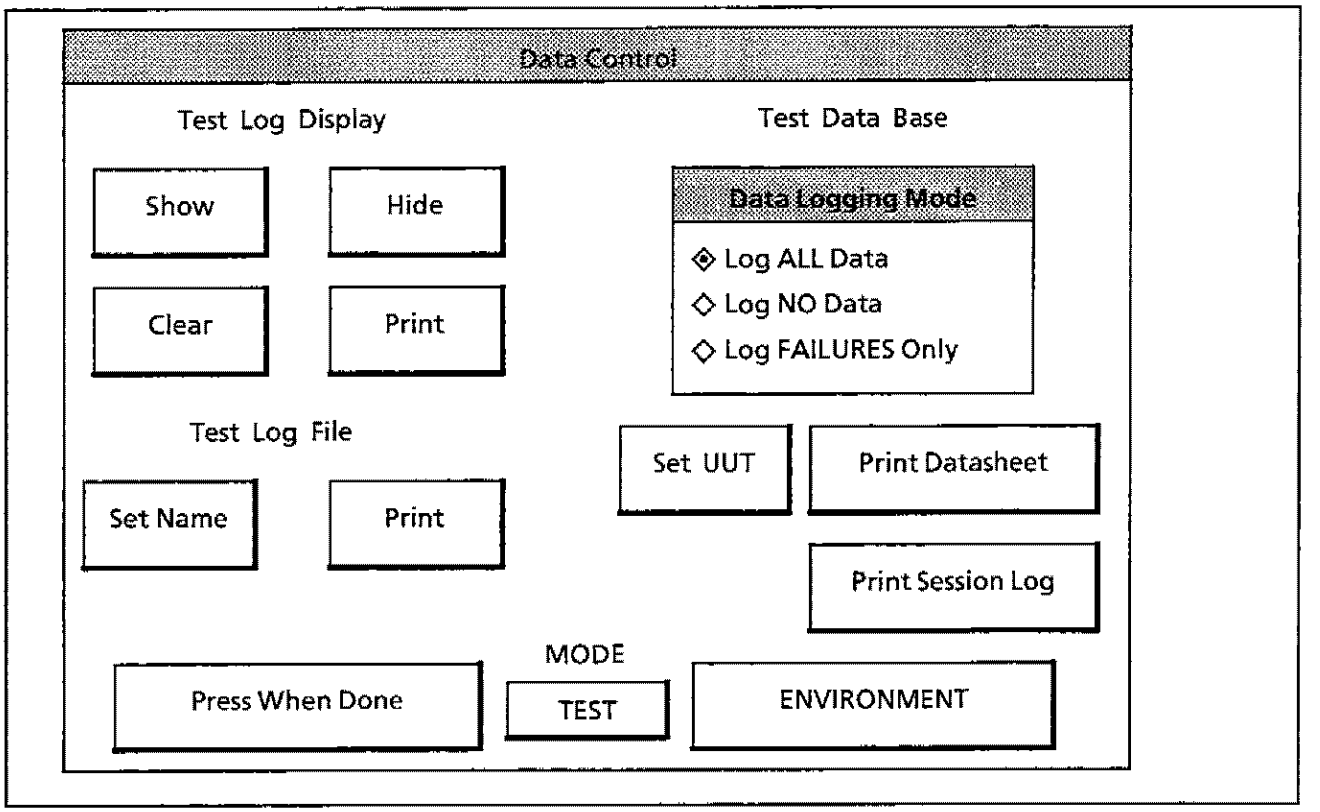

Figure 1-7. Data Control Dialog Box

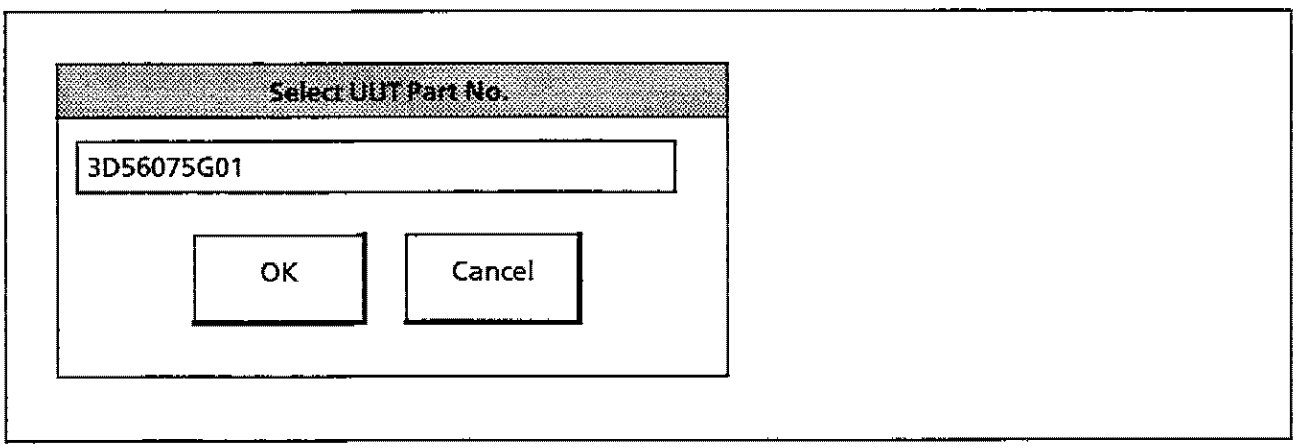

Figure 1-8. Select UUT Part No. Dialog Box

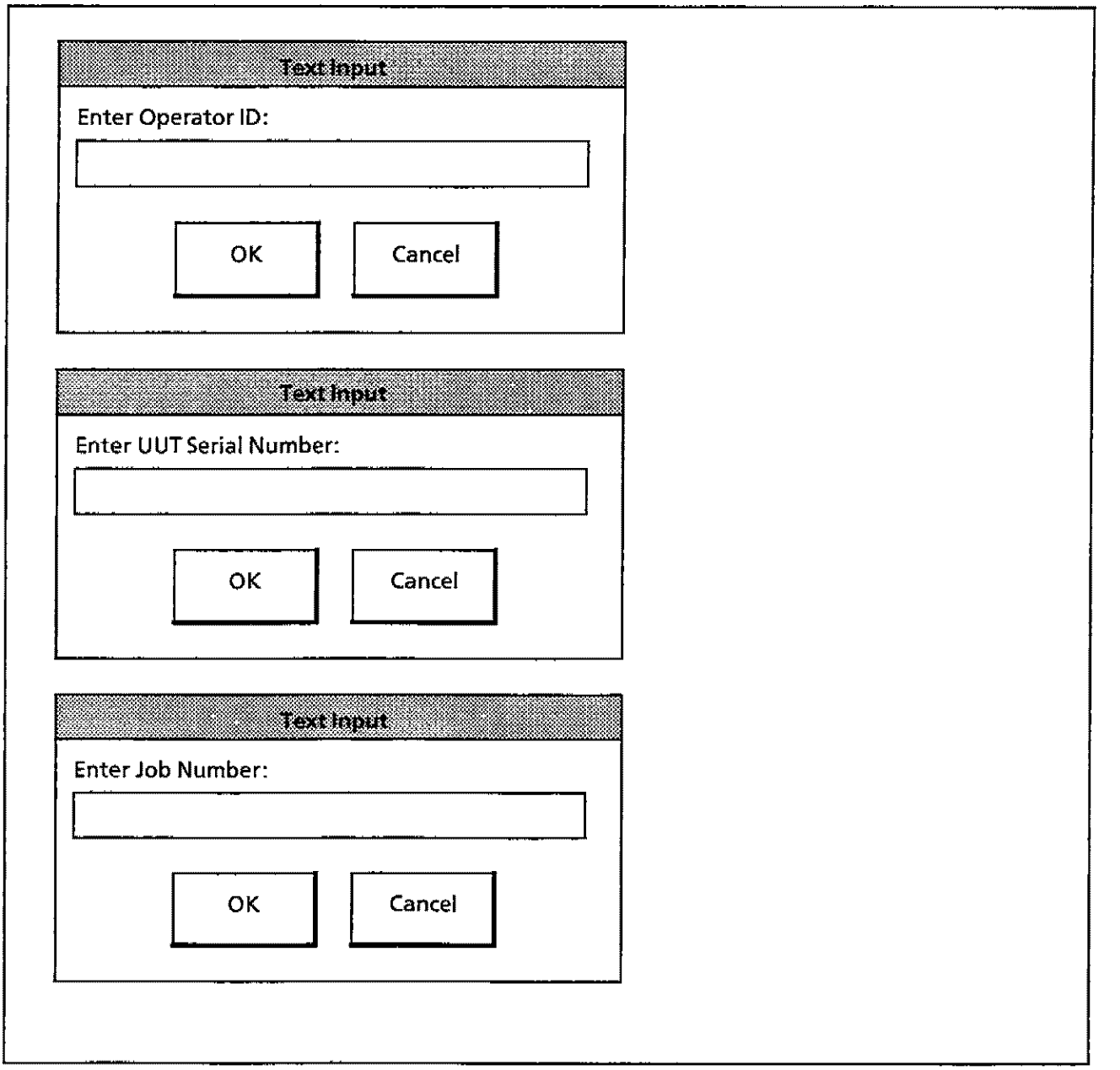

Figure 1-9. Text Input Dialog Box (Program Initialization)

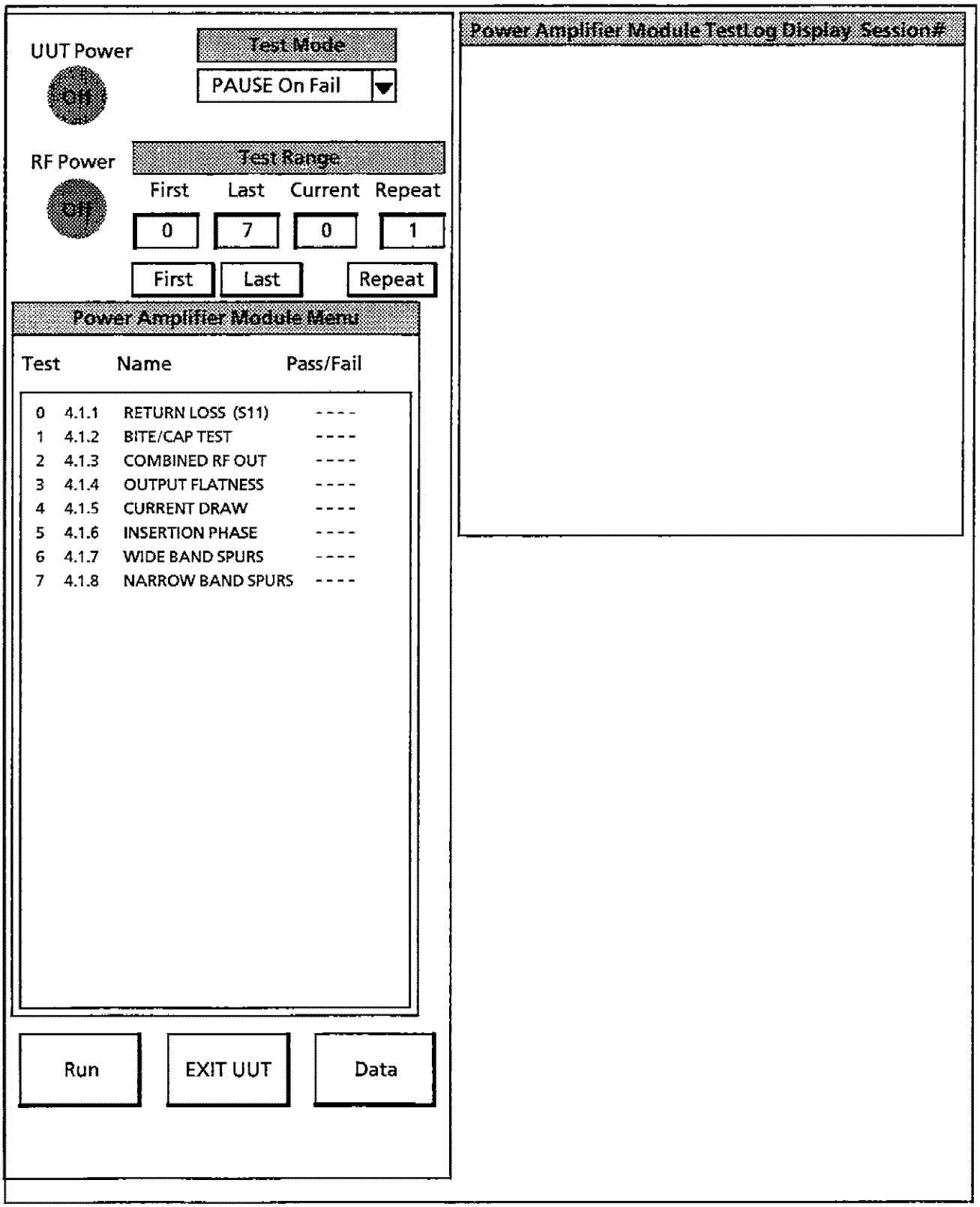

Figure 1-10. Example Test Selection Menu, Test Log Display, and Test Status Display

15. Follow the on-line instructions displayed on the screen to perform the test. If a failure occurs and the PAUSE On Fail option was selected in step 12, a Test Failure window is displayed (see Figure 1-11). You can retry the test, continue to the next test, exit the test, perform the test setup functions again and then retry the test, or initiate diagnostic testing by clicking the corresponding button located in the window. You can also obtain a printout of the test data by clicking the Data button. Selecting the Data button opens the Data Control window which allows you to print the Test Log File, Test Log Display, Test Data Sheet, or Session Log. If the test is completed without a failure, you can also use the **Data** button to obtain printouts of the test data.

1.9.3 Test Executive Program Exit.- Perform the following procedure to exit the Test Executive Program for all UUT tests:

1. In the Test Selection Menu window, Figure 1-10, click the **EXIT UUT** button. The Text Input dialog box, Figure 1-12, is displayed.

2. In the Text Input box, type any desired comments for the test and click the **OK** button. The comments will be displayed at the bottom of the UUT Test Data Sheet.

3. In the Select Test Menu window, Figure 1-6, click the **Quit** button to close the Select Test Menu window.

4. Exit Test Executive Program by selecting **Exit** from the File menu located at the top of the screen. In response to the question about saving changes to the Test Executive Program, click the **No** button.

5. In the Program Manager window, select **Exit** from the File menu located at the top of the screen to exit Microsoft Windows.

6. At the DOS prompt, log off the network if previously connected.

1.10 TROUBLESHOOTING.- This paragraph contains general troubleshooting information for isolating faults on defective PAMTS UUTs. The failed UUT should first be examined for obvious physical defects and then tested on the PAMTS to check its ability to perform within specified design parameters. Using the test pass/fail data provided by the performance tests, the technician can initiate on-line diagnostic tests to help isolate the fault to the defective component(s). When a fault is detected, the diagnostics software uses a set of rules to evaluate the test results and arrive at a conclusion for the cause of the fault. The on-line diagnostics display the conclusion which identifies the faulty circuit or active component and/or the reference designation of the active component that is the most likely cause of the failure. Using the fault detection information provided by the diagnostics, the technician can refer to the schematic diagram for the UUT and identify the circuit associated with the faulty component. Standard manual troubleshooting techniques can then be used to isolate the fault to an active or discrete component. After the unit is repaired, the UUT test should be repeated in its entirety to ensure that the unit is operating within specified design parameters. Perform the following troubleshooting procedure when a faulty PAMTS UUT is received:

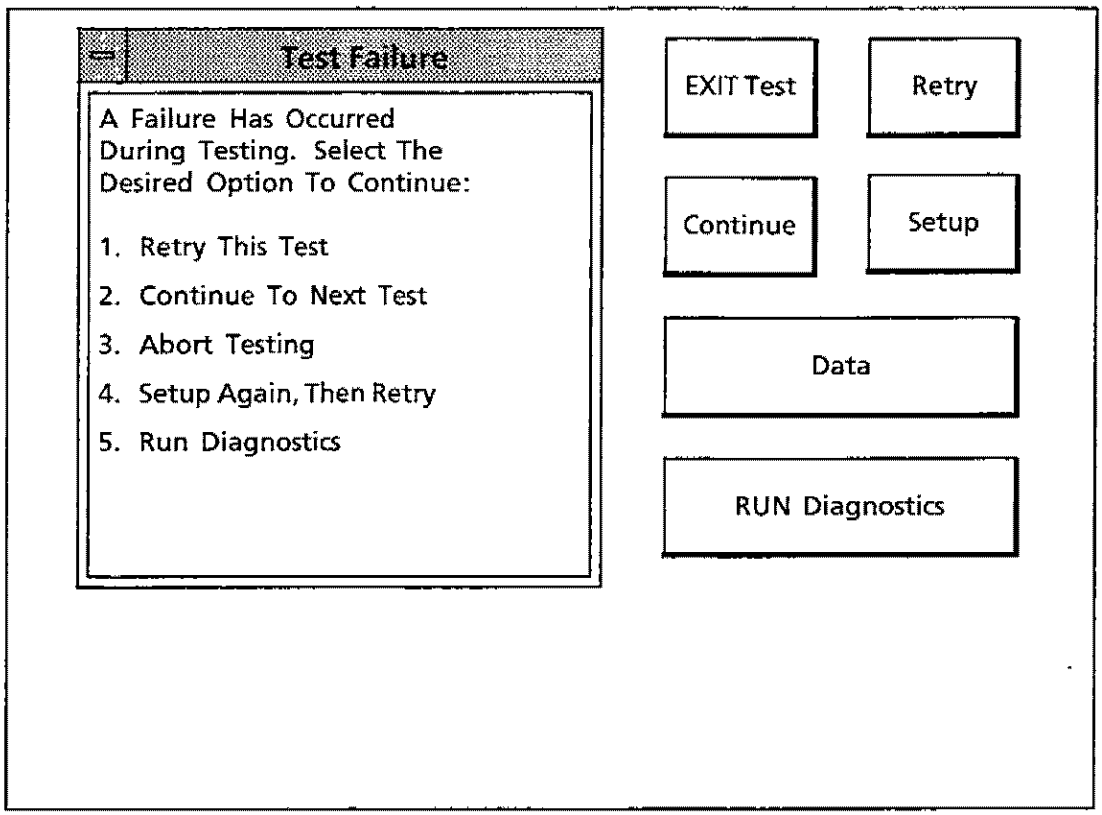

Figure 1-11. Test Failure Window

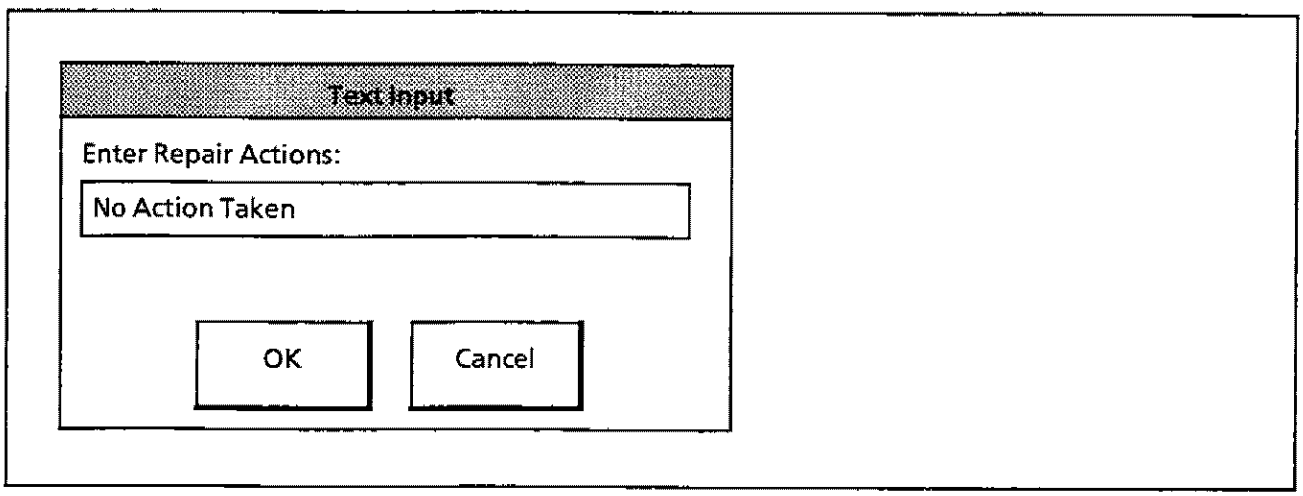

Figure 1-12. Test Input Dialog Box (Program Exit)

1. Verify the item part number against the control tag. Note any probable causes or malfunctions indicated. Refer to Table 1-1 for the repair chapter in this manual that contains the depot repair information and the chapter in TI 6340.26, ARSR-4 System Site-Replaceable LRUs Schematics and Descriptions Instruction Book, that contains the schematic diagram and technical description.

2. Examine the UUT for obvious physical defects and clean the exterior per instructions in paragraphs 1.7.3 and 1.7.4, respectively.

3. Perform the UUT test on the PAMTS per instructions in the applicable repair chapter.

4. When a performance test indicates a test failure, note the performance standard that is out of tolerance and initiate diagnostic testing by clicking the **RUN Diagnostics** button in the Test Failure window, Figure 1-11.

5. Follow the on-line instructions on the computer monitor screen to perform the diagnostic tests.

6. If a failure is detected, the diagnostic software displays the conclusion for the failure. The conclusion identifies the faulty circuit or active component and/or the reference designation of the active component that is the most likely cause of the failure (e.g., U32_Fail or Input_Filter).

7. Refer to the schematic for the UUT and locate the circuit associated with the faulty circuit. Analyze the suspected circuit to determine which components (both active and discrete) are the most probable cause of the abnormal indication.

8. If required, disassemble UUT to gain access to the suspected circuit. Refer to the assembly drawing in Appendix B to identify the location of the suspected component(s). Using standard manual troubleshooting techniques, check all components in the suspected circuit and isolate the fault to the defective component.

9. If the defective component requires replacement, refer to the assembly drawing in Appendix B to identify the component and determine if there are any special repair or replacement criteria. Refer to the associated parts list in Appendix C for parts ordering information.

10. Refer to the applicable repair chapter for information and procedures on removing, repairing, and replacing the component.

11. After repair is completed, repeat the UUT test to verify that the UUT is operating properly.

CHAPTER 2

PREAMPLIFIER ASSEMBLY PN 3D56069G01 REPAIR

2.1 SCOPE.- This chapter contains depot maintenance repair data for preamplifier assembly PN 3D56069G01. The repair data identifies the tools, test equipment, and consumable material needed to support repair and provides information for the disassembly, examination and cleaning, repair, component replacement, reassembly, test, and troubleshooting for the preamplifier assembly. Assembly drawings and parts lists are provided to identify the location of components and provide parts ordering information. The ARSR-4 System reference designations for the preamplifier assembly are 9A2AR2, 9A2AR3 and 9A2AR4. Repair data is provided also for the following preamplifier assembly subassemblies/CCAs:

Subassembly/CCA	Part No.
Class A amplifier A1	3D56910G01
Class C amplifier A2	3D56911G01
Regulator preamplifier A3	706J535G01
1:4 splitter A4	3D56900G01, G02
Power amplifier modules A5 through A8	3D56076G01, G02
BITE/capacitor CCAs A5A1 through A8A1	3D57505G01, G02
16:1 combiner A9	3D56899G01
Output monitor A10	3D57165G01

Refer to chapter 4 for separate repair data for power amplifier modules A5 through A8 and BITE/capacitor CCAs A5A1 through A8A1. Refer to TI 6340.54, ARSR-4 System UUTs Tested on GENRAD Test Set Depot Maintenance Repair Manual, for separate repair data for regulator preamplifier A3. Refer to TI 6340.57, ARSR-4 System UUTs Tested on LLRF Test Set Depot Maintenance Repair Manual for separate repair data for output monitor A10.

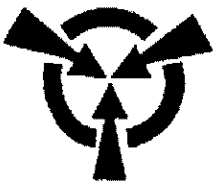

CAUTION

This unit contains electrostatic discharge (ESD) sensitive devices. Refer to DOD-STD-1686 and DOD-HDBK-263 for proper ESD precautions to use when handling this unit. Failure to use proper ESD precautions could result in damage to ESD sensitive devices.

2.2 TOOLS AND TEST EQUIPMENT.- The following tools and test equipment are required for the test and repair of the preamplifier assembly:

PAM test set

Cable Assembly, Preamp (AD421424G01)

2.3 CONSUMABLE MATERIAL.- Depending on the procedure required, the consumable materials listed in Table 2-1 or their equivalents may be required for the test and repair of the preamplifier assembly. The Remarks column in Table 2-1 identifies the part on the assembly drawing/parts list for the preamplifier assembly or subassembly that requires the use of the consumable material. Refer to paragraph 1.8 for application procedures for consumable material.

Table 2-1. Consumable Material Required for PN 3D56069G01

Name	Part Number/ Type/Model/Spec	Manufacturer (CAGE)	Remarks
Adhesive, epoxy, dielectric, low outgassing	PDS53320LG;	Northrop Grumman (97942)	Used to insulate solder connection from bus conductor PN 127B259H01 (find no. 9) on assembly PN 3D56900G01
	DOD-A-82720, NSN 8040-01-080-1490;	Military Specifications (81349)	
	Scotchweld 2216 B/A gray, NSN 8040-00-145-0019	Minnesota Mining and Manufacturing (94960)	
Adhesive, epoxy, thermally-conductive, dielectric	M53320TW;	Northrop Grumman (97942)	Used to mount LED mount (PN 1A21069H01) (find no. 16) on assembly PN 3D57505G01, G01
	Epo-Tek H74	Epoxy Technology (33246)	

Table 2-1. Consumable Material Required for PN 3D56069G01--Continued

Name	Part Number/ Type/Model/Spec.	Manufacturer (CAGE)	Remarks
Adhesive, thread-locking	M53320UA;	Northrop Grumman (97942)	Used to lock threads on screw PN MS24693-C2 (find no. 10) and screw PN MS51957-1) find no. 17) on assembly PN 3D56900G01
	MIL-S-46163, type II, grade M, NSN 8030-01-054-3968;	General Services Administration (80244)	
	Loctite 222, NSN 8030-01-069-3046	Loctite (05972)	
Primer	MIL-S-22473, grade N, NSN 8030-00-900-2373;	General Services Administration (80244)	Used to lock threads on screw PN MS24693-C2 (find no. 10) and screw PN MS51957-1 (find no. 17) on assembly PN 3D56900G01
	HP12, NSN 8030-00-900-2373	Hernon Manufacturing (61603)	

2.4 DISASSEMBLY.- The disassembly of the preamplifier assembly and removal of its associated subassemblies and parts are obvious; therefore no special instructions are provided. Refer to paragraph 1.7.5 for general disassembly information. For the identification and location of components in the preamplifier assembly, refer to the assembly drawings and parts lists referenced in paragraph 2.11.

2.5 EXAMINATION AND CLEANING.- There are no special examination or cleaning procedures required for this UUT. Refer to paragraph 1.7.3 for general examination instructions, and refer to paragraph 1.7.4 for general cleaning instructions.

2.6 REPAIR AND REPLACEMENT.- Repair of the preamplifier assembly is limited to the replacement of removable parts and the repair of obvious external defects. All repairs shall be in accordance with TO 00-25-234, General Shop Practice Requirements for the Repair, Maintenance, and Test of Electrical Equipment. Refer to paragraph 1.8 for repair and replacement procedures that require the use of a particular method or material. When a part must be replaced, select replacement parts from the parts lists referenced in paragraph 2.11. If the fault cannot be isolated and corrected through UUT assembly level testing and standard troubleshooting and repair techniques, then the CCA is condemned at the depot and discarded.

2.7 REASSEMBLY.- The reassembly of the preamplifier assembly and replacement of its associated subassemblies and parts are obvious; therefore, no special instructions are provided. Refer to paragraph 1.7.5 for general reassembly information. For the identification and location of components in the preamplifier assembly, refer to the assembly drawings and parts lists referenced in paragraph 2.11.

2.8 TEST DESCRIPTION.- The following paragraphs provide brief descriptions of the performance and diagnostic tests for the preamplifier assembly. Since the descriptions are for information only, no operator intervention is required. Refer to paragraph 2.9 for the test procedure.

2.8.1 Performance Tests.- The UUT test for the preamplifier assembly consists of the following performance tests:

Test No.	Test Name
0	RF Track Check (Pre-lid only)
1	Regulator Check (Pre-lid only)
2	Class A Tuning (Pre-lid only)
3	Class C Tuning (Pre-lid only)
4	Input Filter Return Loss Test
5	PRF Limiting Test
6	RF Disable Test
7	Pulse Droop Test
8	Narrow Sweep Band Spurious Emissions Test
9	Wide Sweep Band Spurious Emissions Test
10	Monitor Port Test
11	Output Power Test
12	Insertion Phase Test

2.8.1.1 Test 0 - RF Track Check (Pre-lid Only).- This test is a pre-lid test that verifies that continuity exists between the outputs of 1:4 splitter A4 and the input RF tracks of power modules A5 through A8. The continuity between the output RF tracks of power modules A5 through A8 and the input RF tracks of 16:1 combiner A9 is checked. A digital multimeter (DMM) is used to verify that the resistance is less than 10 Ohms. No power is applied to the UUT during the performance of this test. This test is only performed if the operator has replaced any of the power amplifier modules in the UUT.

2.8.1.2 Test 1 - Regulator Check (Pre-lid Only).- This is a pre-lid test that performs some preliminary functional tests and adjustments on regulator preamplifier A3. This test is only performed if the operator has replaced regulator preamplifier A3. Before applying power to the UUT, potentiometers A3R47, A3R53, A3R59 and A3R42 on regulator preamplifier A3 are adjusted fully clockwise. The operator is instructed to use a DMM to verify that there are no shorts to ground on transistors A3Q10, A3Q18, A3Q20 and A3Q22. Power is then applied to the UUT and the operator is instructed to adjust for the correct voltages on the cases of transistors A3Q22, A3Q18 and A3Q20. The operator is also instructed to adjust the voltage at A3TP8 to a specified value.

2.8.1.3 Test 2 - Class A Tuning (Pre-lid Only).- This test allows the operator an opportunity to perform tuning on the Class A amplifier substrate. This test is only performed if repairs have been made to the Class A amplifier substrate. The initial set-up for this test requires that the J1 test connector on the Class A amplifier be jumpered using 0.020 gold ribbon. The output of the Class A amplifier is monitored at the J1 connector while the operator performs the tuning. Timing waveforms RM$CHGEN*F, RM$RFDSBL*, RM$PTRIGOF and RM$-PR*RSTF are activated before power is applied to the UUT. When power is applied the operator is allowed to manually adjust the input frequency and input power levels under program control while measuring the output power level. The following paragraphs describe the separate checks made during Class A tuning.

2.8.1.3.1 Amplifier Power Output.- The operator tunes the output power level of the Class A amplifier to obtain a relative flat response across the entire frequency range. Regardless of the input power level selected, the output power level should be in the range of +27.0 dBm to +30.0 dBm across the frequency range; however, this is a reference range only. It is not a requirement that the output be within this range. The only requirement that must be met is that the overall UUT power output level be as specified in paragraphs 2.8.1.12 through 2.8.1.12.15.

2.8.1.3.2 A3R59 Adjustment.- It may be necessary to adjust the collector voltage on A3Q22. Adjusting potentiometer A3R59 varies the A3Q22 collector voltage from a minimum of 25.0 Vdc to a maximum of 28.5 Vdc. With no RF input drive signal present, the voltage across resistors A1R20, A1R22 and A1R24 should be between 1.50 Vdc to 2.00 Vdc. If the voltage is too low, the detected RF output pulse may look fuzzy. To adjust the voltage on the resistors, adjust A3R59 to adjust the A3Q22 collector voltage. This adjustment affects the voltage on the resistors.

2.8.1.3.3 Spurious Emissions.- Using the spectrum analyzer, verify that there are no spurious emissions across the entire frequency band from 1215 MHz to 1400 MHz. This check must be performed with RF input set at -4.8 dBm, -1.7 dBm and +1.4 dBm for each frequency.

2.8.1.3.4 Oscillations and Pulse Integrity.- Using the oscilloscope to monitor the detected output RF pulse, verify that there are no oscillations and check the pulse integrity. Overshoot (or ringing) during the first few microseconds of the detected pulse is acceptable.

2.8.1.3.5 Exiting Class A Tuning.- When Class A tuning has been completed, click on the Exit Tuning button using the mouse. This action removes the RF input signal from the UUT and measures the voltage on the case of transistor A3Q22. Remove the gold foil jumper from the J1 test connector and re-establish the normal connection to the Class C amplifier input.

2.8.1.4 Test 3 - Class C Tuning (Pre-lid Only).- This test allows the operator an opportunity to perform tuning on the Class C amplifier substrate in the UUT. This test is only performed if repairs have been made to the Class C amplifier substrate. The output of the Class C amplifier is monitored at the A2J4 connector while the operator performs the tuning. Timing waveforms RM$CHGEN*F, RM$RFDSBL*, RM$PTRIGOF and RM$-PR*RSTF are activated before power is applied to the UUT. When power is applied, the operator is allowed to manually adjust the input frequency and input power levels under program control while measuring the output power level. The following paragraphs describe the separate checks made during Class C tuning.

2.8.1.4.1 Amplifier Power Output.- The operator tunes the output power level of the Class C amplifier to obtain a relative flat response across the entire frequency range. Regardless of the input power level selected, the output power level should be within the range of +51.0 dBm to +52.5 dBm across the frequency range from 1215 MHz to 1350 MHz. The output power level should be within the range of +51.5 dBm to +52.5 dBm at a frequency of 1400 MHz regardless of the input power level selected. If it is too difficult to tune the Class C amplifier substrate all at once, it can be tuned one stage at a time by jumpering in the appropriate test connector and tuning that stage for the output power level listed below.

Test Connector	Approximate Output Level
A2J1	+36.0 dBm
A2J2	+42.9 dBm
A2J3	+45.5 dBm

The output power levels indicated are approximate levels that should be achieved regardless of the RF input drive level.

2.8.1.4.2 Collector Voltage Adjustment.- Do not adjust the collector voltage for the Class C amplifier substrate.

2.8.1.4.3 Spurious Emissions.- Using the spectrum analyzer, verify that there are no spurious emissions across the entire frequency band from 1215 MHz to 1400 MHz. This check must be performed with RF input set at -4.8 dBm, -1.7 dBm and +1.4 dBm for each frequency.

2.8.1.4.4 Oscillations and Pulse Integrity.- Using the oscilloscope to monitor the detected output RF pulse, verify that there are no oscillations and check the pulse integrity. Overshoot (or ringing) during the first few microseconds of the detected pulse is acceptable.

2.8.1.4.5 Exiting Class C Tuning.- When Class C tuning has been completed, click on the Exit Tuning button using the mouse. This action removes the RF input signal from the UUT and measures the voltage on the case of transistors A3Q18 and A3Q20.

2.8.1.5 Test 4 - Input Filter Return Loss Test.- This test determines the return loss (S11) of the high pass filter on the Class A substrate in the UUT. The return loss is measured at five frequencies.

2.8.1.5.1 Return Loss At 1215 MHz.- A 1215-MHz, CW test signal at an input level of 0 dBm is provided by the signal generator to the UUT input at J1. The incident and reflected power levels at RF panel connector J1 are measured using the power meter. These measured values are used to calculate the return loss, which must be greater than +14.0 dB.

2.8.1.5.2 Return Loss At 1250 MHz.- A 1250-MHz, CW test signal at an input level of 0 dBm is provided by the signal generator to the UUT input at J1. The incident and reflected power levels at RF panel connector J1 are measured using the power meter. These measured values are used to calculate the return loss, which must be greater than +14.0 dB.

2.8.1.5.3 Return Loss At 1300 MHz.- A 1300-MHz, CW test signal at an input level of 0 dBm is provided by the signal generator to the UUT input at J1. The incident and reflected power levels at RF panel connector J1 are measured using the power meter. These measured values are used to calculate the return loss, which must be greater than +14.0 dB.

2.8.1.5.4 Return Loss At 1350 MHz.- A 1350-MHz, CW test signal at an input level of 0 dBm is provided by the signal generator to the UUT input at J1. The incident and reflected power levels at RF panel connector J1 are measured using the power meter. These measured values are used to calculate the return loss, which must be greater than +14.0 dB.

2.8.1.5.5 Return Loss At 1400 MHz.- A 1400-MHz, CW test signal at an input level of 0 dBm is provided by the signal generator to the UUT input at J1. The incident and reflected power levels at RF panel connector J1 are measured using the power meter. These measured values are used to calculate the return loss, which must be greater than +14.0 dB.

2.8.1.6 Test 5 - PRF Limiting Test.- This test checks the PRF limiting circuits in the UUT. A -1.7dBm, 1300-MHz pulsed RF input signal is applied to the UUT. While monitoring signal PR*$LIM, the period of charge enable signal RM$CHGEN* is slowly decreased. Verify that signal PR*$LIM changes to logic 1 when the period of signal RM$CHGEN* is 1.71 (±0.14) ms. When signal PR*$LIM changes to logic 1, the detector output from the peak power sensor is measured, using the oscilloscope, to verify that every other pulse is being blanked. Charge enable signal RM$CHGEN* is reset to its original 3.47-ms period and signal RM$-PR*RST is toggled to reset the fault circuits in the UUT. Signal PR*$LIM is checked again to verify that it is now logic 0.

2.8.1.7 Test 6 - RF Disable Test.- This test utilizes the spectrum analyzer to measure the output power level from the UUT. A -1.7-dBm, 1300-MHz pulsed RF signal is applied to the input of the UUT. With signal RM$RFDSBL* set to logic 0, the output of the UUT is measured. Signal RM$RFDSBL* is then set to logic 1 and the output of the UUT is measured to verify that no output is present. Upon completion of this test, signal RM$RFDSBL* is again set to logic 0 and the output of the UUT is measured to verify that an output is present.

2.8.1.8 Test 7 - Pulse Droop Test.- This test checks the pulse droop of the UUT output signal at three frequencies.

2.8.1.8.1 Pulse Droop At 1215 MHz.- The pulsed RF input level is set to -1.7 dBm for this test. A 1215-MHz input pulsed RF input signal is applied to the UUT and the lower power meter is used to measure the output power at the 15-us and 135-us points of the UUT output signal. The pulse droop is then calculated using these results. The droop must not exceed 1.0 dBm.

2.8.1.8.2 Pulse Droop At 1300 MHz.- The pulsed RF input level is set to -1.7 dBm for this test. A 1300-MHz input pulsed RF input signal is applied to the UUT and the lower power meter is used to measure the output power at the 15-us and 135-us points of the UUT output signal. The pulse droop is then calculated using these results. The droop must not exceed 1.0 dBm.

2.8.1.8.3 Pulse Droop At 1400 MHz.- The pulsed RF input level is set to -1.7 dBm for this test. A 1400-MHz input pulsed RF input signal is applied to the UUT and the lower power meter is used to measure the output power at the 15-us and 135-us points of the UUT output signal. The pulse droop is then calculated using these results. The droop must not exceed 1.0 dBm.

2.8.1.9 Test 8 - Narrow Sweep Band Spurious Emissions Test.- This test utilizes the spectrum analyzer to check for narrow band spurious emissions from the UUT. This test is performed at three input power levels at five carrier frequencies. The spectrum analyzer is first used to measure the amplitude of the carrier signal. The spectrum analyzer is then set up to observe any spurious emissions. The operator is required to determine if there are any spurious emissions. The rolling noise floor, which is a band of noise that starts at approximately 1000 MHz and extends to approximately 1600 MHz, is excluded from the measurement provided that the bandwidth is greater than 15 MHz. Signals that are part of this noise floor that exceed the limit are not spurious emissions if the bandwidth of the "noise hump" is greater than 15 MHz. The bandwidth of a noise hump is defined as that portion of the output spectrum from the valley preceding the hump to the valley after the hump. Figure 2-1 illustrates good and bad outputs.

2.8.1.9.1 Input Power Level of -4.8 dBm At 1215 MHz.- The input RF signal is set at a frequency of 1215 MHz and a power level of -4.8 dBm. The operator verifies that there are no spurious emissions that exceed the limit of -60 dB with respect to the carrier (dBc).

2.8.1.9.2 Input Power Level of -4.8 dBm At 1250 MHz.- The input RF signal is set at a frequency of 1250 MHz and a power level of -4.8 dBm. The operator verifies that there are no spurious emissions that exceed the limit of -60 dBc.

2.8.1.9.3 Input Power Level of -4.8 dBm At 1300 MHz.- The input RF signal is set at a frequency of 1300 MHz and a power level of -4.8 dBm. The operator verifies that there are no spurious emissions that exceed the limit of -60 dBc.

2.8.1.9.4 Input Power Level of -4.8 dBm At 1350 MHz.- The input RF signal is set at a frequency of 1350 MHz and a power level of -4.8 dBm. The operator verifies that there are no spurious emissions that exceed the limit of -60 dBc.

2.8.1.9.5 Input Power Level of -4.8 dBm At 1400 MHz.- The input RF signal is set at a frequency of 1400 MHz and a power level of -4.8 dBm. The operator verifies that there are no spurious emissions that exceed the limit of -60 dBc.

2.8.1.9.6 Input Power Level of -1.7 dBm At 1215 MHz.- The input RF signal is set at a frequency of 1215 MHz and a power level of -1.7 dBm. The operator verifies that there are no spurious emissions that exceed the limit of -60 dBc.

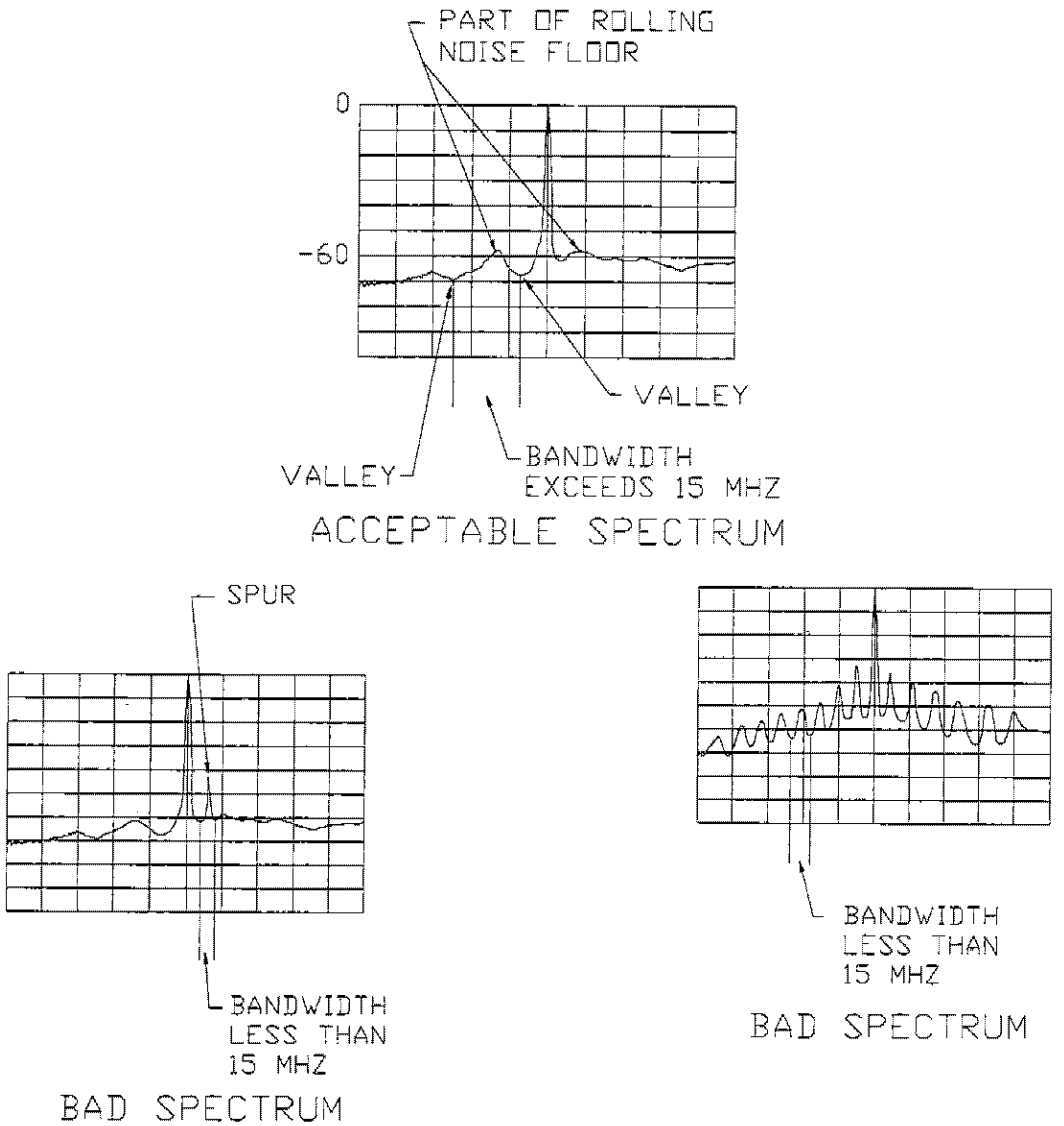

Figure 2-1. Narrow Band Sweep Spurious Emissions Spectrum Criteria

2.8.1.9.7 Input Power Level of -1.7 dBm At 1250 MHz.- The input RF signal is set at a frequency of 1250 MHz and a power level of -1.7 dBm. The operator verifies that there are no spurious emissions that exceed the limit of -60 dBc.

2.8.1.9.8 Input Power Level of -1.7 dBm At 1300 MHz.- The input RF signal is set at a frequency of 1300 MHz and a power level of -1.7 dBm. The operator verifies that there are no spurious emissions that exceed the limit of -60 dBc.

2.8.1.9.9 Input Power Level of -1.7 dBm At 1350 MHz.- The input RF signal is set at a frequency of 1350 MHz and a power level of -1.7 dBm. The operator verifies that there are no spurious emissions that exceed the limit of -60 dBc.

2.8.1.9.10 Input Power Level of -1.7 dBm At 1400 MHz.- The input RF signal is set at a frequency of 1400 MHz and a power level of -1.7 dBm. The operator verifies that there are no spurious emissions that exceed the limit of -60 dBc.

2.8.1.9.11 Input Power Level of +1.4 dBm At 1215 MHz.- The input RF signal is set at a frequency of 1215 MHz and a power level of +1.4 dBm. The operator verifies that there are no spurious emissions that exceed the limit of -60 dBc.

2.8.1.9.12 Input Power Level of +1.4 dBm at 1250 MHz.- The input RF signal is set at a frequency of 1250 MHz and a power level of +1.4 dBm. The operator verifies that there are no spurious emissions that exceed the limit of -60 dBc.

2.8.1.9.13 Input Power Level of +1.4 dBm At 1300 MHz.- The input RF signal is set at a frequency of 1300 MHz and a power level of +1.4 dBm. The operator verifies that there are no spurious emissions that exceed the limit of -60 dBc.

2.8.1.9.14 Input Power Level of +1.4 dBm At 1350 MHz.- The input RF signal is set at a frequency of 1350 MHz and a power level of +1.4 dBm. The operator verifies that there are no spurious emissions that exceed the limit of -60 dBc.

2.8.1.9.15 Input Power Level of +1.4 dBm At 1400 MHz.- The input RF signal is set at a frequency of 1400 MHz and a power level of +1.4 dBm. The operator verifies that there are no spurious emissions that exceed the limit of -60 dBc.

2.8.1.10 Test 9 - Wide Sweep Band Spurious Emissions Test.- This test utilizes the spectrum analyzer to check for wide band spurious emissions from the UUT. This test is performed at an input power level of +1.4 dBm at five carrier frequencies. The spectrum analyzer is first used to measure the amplitude of the carrier signal. The spectrum analyzer is then set up to observe any spurious emissions. The operator is required to determine if there are any spurious emissions. The rolling noise floor is excluded provided the bandwidth is greater than 15 MHz. The narrow sweep band (100 MHz on either side of the carrier) is also excluded during this measurement. Figure 2-2 illustrates good and bad outputs.

2.8.1.10.1 Input Frequency of 1215 MHz.- The input RF signal is set at a frequency of 1215 MHz and a power level of +1.4 dBm. The operator verifies that there are no spurious emissions that exceed the limit of -60 dBc.

2.8.1.10.2 Input Frequency of 1250 MHz.- The input RF signal is set at a frequency of 1250 MHz and a power level of +1.4 dBm. The operator verifies that there are no spurious emissions that exceed the limit of -60 dBc.

2.8.1.10.3 Input Frequency of 1300 MHz.- The input RF signal is set at a frequency of 1300 MHz and a power level of +1.4 dBm. The operator verifies that there are no spurious emissions that exceed the limit of -60 dBc.

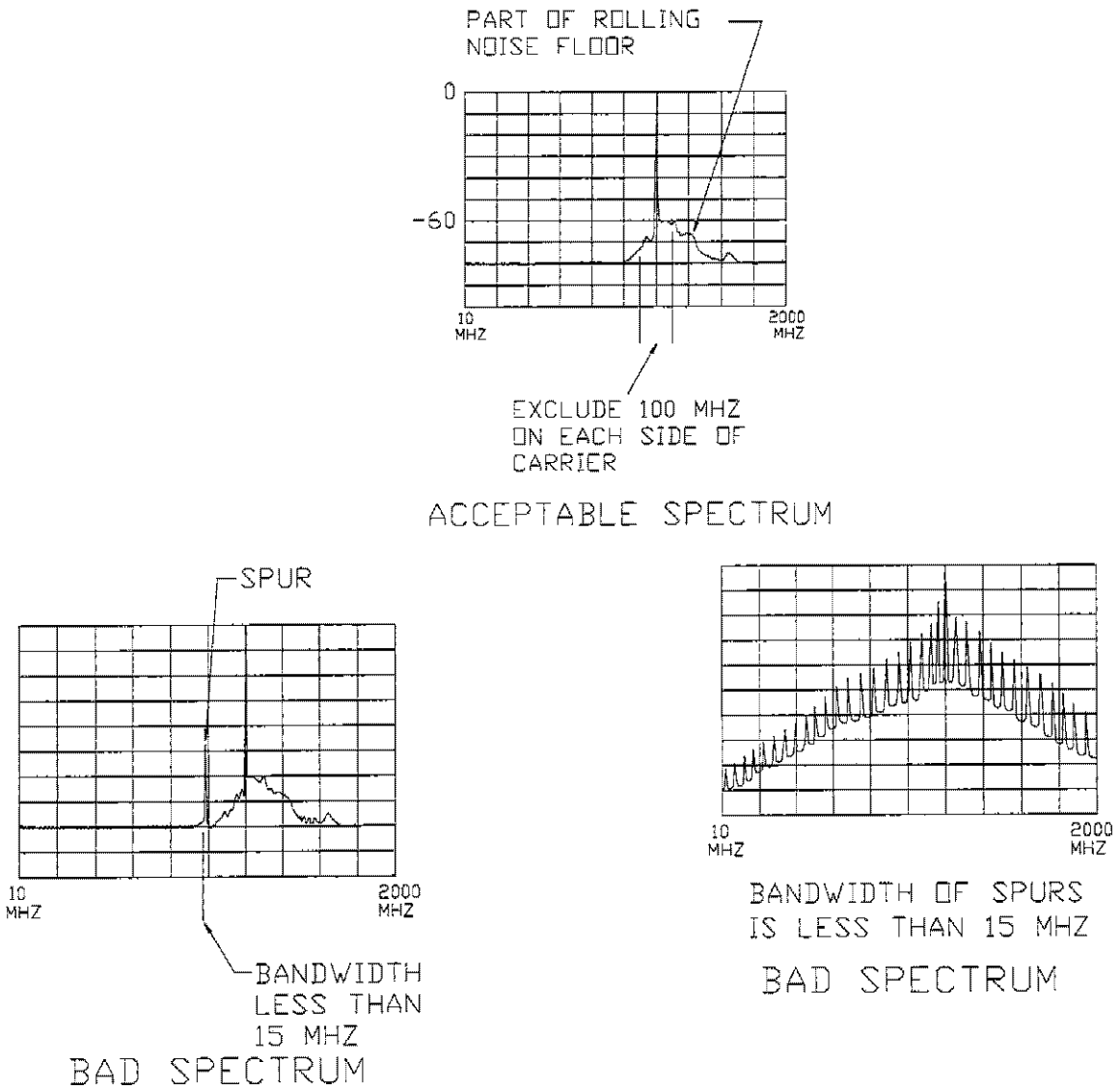

Figure 2-2. Wide Band Sweep Spurious Emissions Spectrum Criteria

2.8.1.10.4 Input Frequency of 1350 MHz.- The input RF signal is set at a frequency of 1350 MHz and a power level of +1.4 dBm. The operator verifies that there are no spurious emissions that exceed the limit of -60 dBc.

2.8.1.10.5 Input Frequency of 1400 MHz.- The input RF signal is set at a frequency of 1400 MHz and a power level of +1.4 dBm. The operator verifies that there are no spurious emissions that exceed the limit of -60 dBc.

2.8.1.11 Test 10 - Monitor Port Test.- This test utilizes the power meter as a monitoring device to measure the output power level at UUT connector P1 when a -1.7-dBm peak input signal is applied at UUT connector J1. This test is performed at five carrier frequencies.

2.8.1.11.1 Monitor Port Test At 1215 MHz.- This test verifies that the output power level at UUT connector P1 is +12.0 (±2.0) dBm peak at a carrier frequency of 1215 MHz.

2.8.1.11.2 Monitor Port Test At 1250 MHz.- This test verifies that the output power level at UUT connector P1 is +12.0 (±2.0) dBm peak at a carrier frequency of 1250 MHz.

2.8.1.11.3 Monitor Port Test At 1300 MHz.- This test verifies that the output power level at UUT connector P1 is +12.0 (±2.0) dBm peak at a carrier frequency of 1300 MHz.

2.8.1.11.4 Monitor Port Test At 1350 MHz.- This test verifies that the output power level at UUT connector P1 is +12.0 (±2.0) dBm peak at a carrier frequency of 1350 MHz.

2.8.1.11.5 Monitor Port Test At 1400 MHz.- This test verifies that the output power level at UUT connector P1 is +12.0 (±2.0) dBm peak at a carrier frequency of 1400 MHz.

2.8.1.12 Test 11 - Output Power Test.- This test checks the output power at UUT connector J4 at five carrier frequencies and three input power levels. The four input timing waveforms, charge enable, pretrigger, RF pulse and strobe, are activated prior to applying power to the UUT. The RF input signal is set to a frequency of 1215 MHz and a power level of -4.8 dBm. Before any testing begins power supply no. 5, which supplies the +40-volt signal to the UUT, must be set to +34 (±0.1) Vdc. Using the DMM in the AC+DC mode, determine the peak voltage of the signal before the RF pulse occurs. The peak voltage occurs during offtime, the time during which the capacitors are recharging. If necessary, re-adjust power supply no. 5 to obtain the proper voltage to the UUT.

2.8.1.12.1 Input Power Level of -4.8 dBm At 1215 MHz.- After a 5-minute warmup the output power at the 75-us point of the UUT output signal at J4 is measured using the lower power meter. The output power is verified to be within the range of +61.9 dBm to +63.4 dBm.

2.8.1.12.2 Input Power Level of -4.8 dBm At 1250 MHz.- The input power level is changed to -4.8 dBm at a frequency of 1250 MHz. The output power at the 75-us point of the UUT output signal at J4 is measured using the lower power meter and verified to be within the range of +61.9 dBm to +63.4 dBm.

2.8.1.12.3 Input Power Level of -4.8 dBm At 1300 MHz.- The input power level is changed to -4.8 dBm at a frequency of 1300 MHz. The output power at the 75-us point of the UUT output signal at J4 is measured using the lower power meter and verified to be within the range of +61.9 dBm to +63.4 dBm.

2.8.1.12.4 Input Power Level of -4.8 dBm At 1350 MHz.- The input power level is changed to -4.8 dBm at a frequency of 1350 MHz. The output power at the 75-us point of the UUT output signal at J4 is measured using the lower power meter and verified to be within the range of +61.9 dBm to +63.4 dBm.

2.8.1.12.5 Input Power Level of -4.8 dBm At 1400 MHz.- The input power level is changed to -4.8 dBm at a frequency of 1400 MHz. The output power at the 75-us point of the UUT output

signal at J4 is measured using the lower power meter and verified to be within the range of +61.9 dBm to +63.4 dBm.

2.8.1.12.6 Input Power Level of -1.7 dBm At 1215 MHz.- The input power level is changed to -1.7 dBm at a frequency of 1215 MHz. The output power at the 75-us point of the UUT output signal at J4 is measured using the lower power meter and verified to be within the range of +61.9 dBm to +63.4 dBm.

2.8.1.12.7 Input Power Level of -1.7 dBm At 1250 MHz.- The input power level is changed to -1.7 dBm at a frequency of 1250 MHz. The output power at the 75-us point of the UUT output signal at J4 is measured using the lower power meter and verified to be within the range of +61.9 dBm to +63.4 dBm.

2.8.1.12.8 Input Power Level of -1.7 dBm At 1300 MHz.- The input power level is changed to -1.7 dBm at a frequency of 1300 MHz. The output power at the 75-us point of the UUT output signal at J4 is measured using the lower power meter and verified to be within the range of +61.9 dBm to +63.4 dBm.

2.8.1.12.9 Input Power Level of -1.7 dBm At 1350 MHz.- The input power level is changed to -1.7 dBm at a frequency of 1350 MHz. The output power at the 75-us point of the UUT output signal at J4 is measured using the lower power meter and verified to be within the range of +61.9 dBm to +63.4 dBm.

2.8.1.12.10 Input Power Level of -1.7 dBm At 1400 MHz.- The input power level is changed to -1.7 dBm at a frequency of 1400 MHz. The output power at the 75-us point of the UUT output signal at J4 is measured using the lower power meter and verified to be within the range of +61.9 dBm to +63.4 dBm.

2.8.1.12.11 Input Power Level of +1.4 dBm At 1215 MHz.- The input power level is changed to +1.4 dBm at a frequency of 1215 MHz. The output power at the 75-us point of the UUT output signal at J4 is measured using the lower power meter and verified to be within the range of +61.9 dBm to +63.4 dBm.

2.8.1.12.12 Input Power Level of +1.4 dBm At 1250 MHz.- The input power level is changed to +1.4 dBm at a frequency of 1250 MHz. The output power at the 75-us point of the UUT output signal at J4 is measured using the lower power meter and verified to be within the range of +61.9 dBm to +63.4 dBm.

2.8.1.12.13 Input Power Level of +1.4 dBm At 1300 MHz.- The input power level is changed to +1.4 dBm at a frequency of 1300 MHz. The output power at the 75-us point of the UUT output signal at J4 is measured using the lower power meter and verified to be within the range of +61.9 dBm to +63.4 dBm.

2.8.1.12.14 Input Power Level of +1.4 dBm At 1350 MHz.- The input power level is changed to +1.4 dBm at a frequency of 1350 MHz. The output power at the 75-us point of the UUT output signal at J4 is measured using the lower power meter and verified to be within the range of +61.9 dBm to +63.4 dBm.

2.8.1.12.15 Input Power Level of +1.4 dBm At 1400 MHz.- The input power level is changed to +1.4 dBm at a frequency of 1400 MHz. The output power at the 75-us point of the UUT output signal at J4 is measured using the lower power meter and verified to be within the range of +61.9 dBm to +63.4 dBm.

2.8.1.13 Test 12 - Insertion Phase Test.- This test measures the insertion phase of the UUT at a frequency of 1400 MHz using the six port assembly and the middle and upper power meters. An SMA to N adapter is substituted for the UUT to obtain an initial phase angle value to be used as a reference. A +1.4-dBm, 1400-MHz, CW signal is applied and the attenuators on the six port assembly are set to balance the input power levels being applied to the six port assembly. Using the power meters, which are operating in CW mode to provide maximum dynamic range, the power level at the six port assembly is measured and the reference phase angle is calculated. The SMA to N adapter is removed and the UUT is reconnected. A +1.4-dBm, 1400-MHz, pulsed RF signal is applied at J1 of the UUT. Using the power meters, which are now operating in burst mode, the power level at the six port assembly is measured. The phase angle is calculated with the UUT in the circuit and the reference phase angle is subtracted from the calculated value to determine the phase shift through the UUT. The phase shift must be +130 (±20) degrees.

2.8.2 Diagnostic Tests.- The fault isolation software is designed to identify the faulty component whenever a UUT performance test fails. Once a failure has been detected, the test program determines the tests to be run in order to gain additional data necessary to isolate to a specific component or fault ambiguity group. The tests may be selected from either the diagnostic tests or the performance tests. The operator may be prompted to remove the UUT cover, attach an extender board and probe specified points. Once the fault has been isolated, a diagnostic message specifying the failed component or fault ambiguity group is displayed to the operator. If an ambiguity group is specified, the operator is responsible for isolating to the failed component.

2.9 TEST PROCEDURE.- Perform the following procedure to run the UUT test for preamplifier assembly 3D56069G01 on the PAMTS. The UUT test is used as a troubleshooting aid to identify suspected faults before repair is initiated. The UUT test for the preamplifier assembly consists of the performance tests listed in Table 2-2. Table 2-2 also lists the UUT node that is checked and the expected value of the response for each test. Proceed as follows:

1. At the computer/controller workstation, initialize the Test Executive Program per paragraph 1.9.2. When instructed to select the desired UUT test in the Select Test Menu, choose the Preamplifier option and click the Run button to initiate the test on the preamplifier assembly.

2. Follow the on-line instructions on the computer monitor screen to perform the test.

3. When the test for the preamplifier assembly is completed, exit the Test Executive Program per paragraph 1.9.3

Table 2-2. Performance Tests for PN 3D56069G01

Test Number	Test Name	UUT Test Node	Expected Response
0	RF Track Check (Pre-lid only):		
	Impedance between A4 and A5		
	4SPLITL4RF4	A4E6, A5E7	< 10 Ohms
	+40VL4RF4	A4E2, A5E8	< 10 Ohms
	Impedance between A4 and A6		
	4SPLITL4RF3	A4E7, A6E7	< 10 Ohms
	+40VL4RF3	A4E3, A6E8	< 10 Ohms
	Impedance between A4 and A7		
	4SPLITL4RF2	A4E8, A7E7	< 10 Ohms
	+40VL4RF2	A4E4, A7E8	< 10 Ohms
	Impedance between A4 and A8		
	4SPLITL4RF1	A4E9, A8E7	< 10 Ohms
	+40VL4RF1	A4E5, A8E8	< 10 Ohms
	Impedance between A5 and A9:		
	PWL1*RF1	A5E9, A9E1	< 10 Ohms
	PWL1*RF2	A5E10, A9E2	< 10 Ohms
	PWL1*RF3	A5E11, A9E3	< 10 Ohms
	PWL1*RF3	A5E12, A9E4	< 10 Ohms
	Impedance between A6 and A9:		
	PWL2*RF1	A6E9, A9E5	< 10 Ohms
	PWL2*RF2	A6E10, A9E6	< 10 Ohms
	PWL2*RF3	A6E11, A9E7	< 10 Ohms
	PWL2*RF4	A6E12, A9E8	< 10 Ohms
	Impedance between A6 and A9:		
	PWL3*RF1	A7E9, A9E9	< 10 Ohms
	PWL3*RF2	A7E10, A9E10	< 10 Ohms
	PWL3*RF3	A7E11, A9E11	< 10 Ohms
	PWL3*RF4	A7E12, A9E12	< 10 Ohms
	Impedance between A8 and A9:		
	PWL4*RF1	A8E9, A9E13	< 10 Ohms
	PWL4*RF2	A8E10, A9E14	< 10 Ohms
	PWL4*RF3	A8E11, A9E15	< 10 Ohms
	PWL4*RF4	A8E12, A9E16	< 10 Ohms

Table 2-2. Performance Tests for PN 3D56069G01--Continued

Test Number	Test Name	UUT Test Node	Expected Response
1	Regulator Check (Pre-lid only):		
	Impedance at A3Q10	Case of A3Q10	> 50 Ohms
	Impedance at A3Q18	Case of A3Q18	> 50 Ohms
	Impedance at A3Q20	Case of A3Q20	> 50 Ohms
	Impedance at A3Q22	Case of A3Q22	> 50 Ohms
	Voltage on A3Q22	Case of A3Q22	+25.6 (±0.1) Vdc
	Voltage on A3Q18	Case of A3Q18	+18.5 (±0.1) Vdc
	Voltage on A3Q20	Case of A3Q20	+22.5 (±0.1) Vdc
	Voltage at test point 8	A3TP8	+5.4 (±0.1) Vdc
2	Class A Tuning (Pre-lid only):		
	Power Output	A1J1	+27.0 dBm to +30 dBm
	A3R59 adjustment		
	Voltage across A1R20	A1R20-A1R21	+1.50 Vdc to +2.00 Vdc
	Voltage across A1R22	A1R22-A1R23	+1.50 Vdc to +2.00 Vdc
	Voltage across A1R24	A1R24-A1R25	+1.50 Vdc to +2.00 Vdc
	Spurious Emissions	A1J1	≤ 60 dBc
	Oscillations and Pulse Integrity	A1J1	No oscillations or steps
	Voltage on A3Q22	Case of A3Q22	Measured for reference
3	Class C Tuning (Pre-lid only):		
	Power Output		
	at 1215 MHz	A2J4	+51.0 dBm to +52.5 dBm
	at 1350 MHz	A2J4	+51.0 dBm to +52.5 dBm
	at 1400 MHz	A2J4	+51.5 dBm to +52.5 dBm
	(If tuned by stages)		
	Stage 1	A2J1	+36.0 dBm
	Stage 2	A2J2	+42.9 dBm
	Stage 3	A2J3	+45.5 dBm
	Spurious Emissions	A2J4	≤ 60 dBc
	Oscillations and Pulse Integrity	A2J4	No oscillations or steps
	Voltage on A3Q18	Case of A3Q18	Measured for reference
	Voltage on A3Q20	Case of A3Q20	Measured for reference
4	Input Filter Return Loss Test:		
	at 1215 MHz	J1	> +14.0 dB
	at 1250 MHz	J1	> +14.0 dB
	at 1300 MHz	J1	> +14.0 dB
	at 1350 MHz	J1	> +14.0 dB
	at 1400 MHz	J1	> +14.0 dB

Table 2-2. Performance Tests for PN 3D56069G01--Continued

Test Number	Test Name	UUT Test Node	Expected Response
5	PRF Limiting Test:		
	PR*$LIM	J2-25/J2-13	Changes to logic 1
	RF output	P1	RF pulse blanked
	PR*$LIM	J2-25/J2-13	Changes to logic 0
6	RF Disable Test:		
	RM$RFDSBL* = 0	P1	RF output present
	RM$RFDSBL* = 1	P1	RF output not present
	RM$RFDSBL* = 0	P1	RF output present
7	Pulse Droop Test:		
	at 1215 MHz	P1	≤ 1.0 dBm
	at 1300 MHz	P1	≤ 1.0 dBm
	at 1400 MHz	P1	≤ 1.0 dBm
8	Narrow Sweep Band Spurious Emissions Test:		
	-4.8 dBm at 1215 MHz	P1	≤ 60 dBc
	-4.8 dBm at 1250 MHz	P1	≤ 60 dBc
	-4.8 dBm at 1300 MHz	P1	≤ 60 dBc
	-4.8 dBm at 1350 MHz	P1	≤ 60 dBc
	-4.8 dBm at 1400 MHz	P1	≤ 60 dBc
	-1.7 dBm at 1215 MHz	P1	≤ 60 dBc
	-1.7 dBm at 1250 MHz	P1	≤ 60 dBc
	-1.7 dBm at 1300 MHz	P1	≤ 60 dBc
	-1.7 dBm at 1350 MHz	P1	≤ 60 dBc
	-1.7 dBm at 1400 MHz	P1	≤ 60 dBc
	+1.4 dBm at 1215 MHz	P1	≤ 60 dBc
	+1.4 dBm at 1250 MHz	P1	≤ 60 dBc
	+1.4 dBm at 1300 MHz	P1	≤ 60 dBc
	+1.4 dBm at 1350 MHz	P1	≤ 60 dBc
	+1.4 dBm at 1400 MHz	P1	≤ 60 dBc
9	Wide Sweep Band Spurious Emissions Test:		
	at 1215 MHz	P1	≤ 60 dBc
	at 1250 MHz	P1	≤ 60 dBc
	at 1300 MHz	P1	≤ 60 dBc
	at 1350 MHz	P1	≤ 60 dBc
	at 1400 MHz	P1	≤ 60 dBc

Table 2-2. Performance Tests for PN 3D56069G01--Continued

Test Number	Test Name	UUT Test Nodes	Expected Response
10	Monitor Port Test:		
	at 1215 MHz	P1	+12.0 (±2.0) dBm peak
	at 1250 MHz	P1	+12.0 (±2.0) dBm peak
	at 1300 MHz	P1	+12.0 (±2.0) dBm peak
	at 1350 MHz	P1	+12.0 (±2.0) dBm peak
	at 1400 MHz	P1	+12.0 (±2.0) dBm peak
11	Output Power Test:		
	-4.8 dBm at 1215 MHz	J4	+61.9 dBm to +63.4 dBm
	-4.8 dBm at 1250 MHz	J4	+61.9 dBm to +63.4 dBm
	-4.8 dBm at 1300 MHz	J4	+61.9 dBm to +63.4 dBm
	-4.8 dBm at 1350 MHz	J4	+61.9 dBm to +63.4 dBm
	-4.8 dBm at 1400 MHz	J4	+61.9 dBm to +63.4 dBm
	-1.7 dBm at 1215 MHz	J4	+61.9 dBm to +63.4 dBm
	-1.7 dBm at 1250 MHz	J4	+61.9 dBm to +63.4 dBm
	-1.7 dBm at 1300 MHz	J4	+61.9 dBm to +63.4 dBm
	-1.7 dBm at 1350 MHz	J4	+61.9 dBm to +63.4 dBm
	-1.7 dBm at 1400 MHz	J4	+61.9 dBm to +63.4 dBm
	+1.4 dBm at 1215 MHz	J4	+61.9 dBm to +63.4 dBm
	+1.4 dBm at 1250 MHz	J4	+61.9 dBm to +63.4 dBm
	+1.4 dBm at 1300 MHz	J4	+61.9 dBm to +63.4 dBm
	+1.4 dBm at 1350 MHz	J4	+61.9 dBm to +63.4 dBm
	+1.4 dBm at 1400 MHz	J4	+61.9 dBm to +63.4 dBm
12	Insertion Phase Test	P1	+130 (±20) degrees

2.10 TROUBLESHOOTING.- There are no special troubleshooting procedures required for this UUT. If a failure occurs during the UUT performance tests, the operator can initiate on-line diagnostics to help isolate the fault. If a fault is detected, the on-line diagnostics display a conclusion which identifies the faulty circuit or active component and/or the reference designation of the active component that is the most likely cause of the failure. Refer to paragraph 1.10 for general troubleshooting information.

2.11 ASSEMBLY DRAWINGS AND PARTS LISTS.- Assembly drawings and parts lists are provided to identify and show the location of parts for the preamplifier assembly. The assembly drawings, located in Appendix B in an 11-inch by 17-inch flat-pak format, consist of the following:

Assembly Drawing	Title
3D56069	Preamplifier assembly
3D56076	Power amplifier module
3D56899	16:1 combiner
3D56900	1:4 splitter
3D56910	Class A amplifier
3D56911	Class C amplifier
3D57165	Output monitor
3D57505	BITE/capacitor CCA
706J535	Regulator preamplifier

Each assembly drawing has an associated parts list (PL). The separate PLs are located in Appendix C. The find number for each item in a PL corresponds to the callout number for the item on the associated assembly drawing.

2.12 WIRE DATA.- All wire data for the preamplifier assembly is located in Appendix D. The wire data (wire list and wiring diagrams) consists of the following:

Drawing Number	Title
PL1A27490	Wiring Diagram, Cable E - Preamplifier
3D59086	Post Wired Assembly, Cable D - Preamplifier

Wiring diagram 3D59086 has an associated PL that is located in Appendix C. Wiring diagram PL1A27490 is a PL only and has no associated graphic. Refer to Appendix C for PL1A27490.

CHAPTER 3

LOOKDOWN DRIVER ASSEMBLY PN 3D56075G01 REPAIR

3.1 SCOPE.- This chapter contains depot maintenance repair data for lookdown driver assembly PN 3D56075G01. The repair data identifies the tools, test equipment, and consumable material needed to support repair and provides information for the disassembly, examination and cleaning, repair, component replacement, reassembly, test, and troubleshooting for the lookdown driver assembly. The PAMTS performs high power testing of the lookdown driver assembly; refer to TI 6340.57, ARSR-4 System UUTs Tested on LLRF Test Set Depot Maintenance Repair Manual, for low power testing of the lookdown driver assembly. Assembly drawings and parts lists are provided to identify the location of components and provide parts ordering information. The ARSR-4 System reference designations for the lookdown driver assembly is 9A2A6. Repair data is provided also for the following lookdown driver assembly subassemblies/CCAs:

Subassembly/CCA	Part No.
Power amplifier modules AR1 through AR4	3D56076G01, G02
BITE/capacitor CCAs AR1A1 through AR4A1	3D57505G01, G02
1:2 splitter A1, A2, A3	3D57239G01
1:2 uneven splitter A4	3D57263G01
Switch assembly A5	3D57264G01
CCA, BITE (lookdown driver) A7	3D57241G01
1:4 splitter A8	3D56900G01, G02
16:1 combiner A9	3D56899G01
Output monitor A10	3D57165G01

Refer to chapter 4 for separate repair data for power amplifier modules AR1 through AR4. Refer to TI 6340.57, ARSR-4 System UUTs Tested on LLRF Test Set Depot Maintenance Repair Manual, for separate repair data for switch assembly A5 and output monitor A10. Refer to TI 6340.54, ARSR-4 System UUTs Tested on GENRAD Test Set Depot Maintenance Repair Manual, for separate repair data for CCA, BITE (lookdown driver) A7.

CAUTION

This unit contains electrostatic discharge (ESD) sensitive devices. Refer to DOD-STD-1686 and DOD-HDBK-263 for proper ESD precautions to use when handling this unit. Failure to use proper ESD precautions could result in damage to ESD sensitive devices.

3.2 TOOLS AND TEST EQUIPMENT.- The following tools and test equipment are required for the test and repair of the lookdown driver assembly:

PAM test set

Cable Assembly, Lookdown Driver (AD421425G01)

3.3 CONSUMABLE MATERIAL.- Depending on the procedure required, the consumable materials listed in Table 3-1 or their equivalents may be required for the test and repair of the lookdown driver assembly. The Remarks column in Table 3-1 identifies the part on the assembly drawing/parts list for the lookdown driver assembly or subassembly that requires the use of consumable material. Refer to paragraph 1.8 for application procedures for consumable material.

Table 3-1. Consumable Material Required for PN 3D56075G01

Name	Part Number/ Type/Model/Spec	Manufacturer (CAGE)	Remarks
Adhesive, epoxy, dielectric, low outgassing	PDS53320LG;	Northrop Grumman (97942)	Used to bond loop clamp bases PN 149C298H01 (find no. 51) on assembly PN 3D56075G01. Used to support cable B assembly PN 3D57572G01 (find no. 67) on assembly PN 3D56075G01. Used also to insulate solder connection from bus conductor PN 127B259H01 (find no. 9) on assembly PN 3D56900G01
	DOD-A-82720, NSN 8040-01-080-1490;	Military Specifications (81349)	
	Scotchweld 2216 B/A gray, NSN 8040-00-145-0019	Minnesota Mining and Manufacturing (94960)	

Table 3-1. Consumable Material Required for PN 3D56075G01--Continued

Name	Part Number/ Type/Model/Spec	Manufacturer (CAGE)	Remarks
Adhesive, thread-locking	M53320UA; MIL-S-46163, type II, grade M, NSN 8030-01-054-3968; Loctite 222, NSN 8030-01-069-3046	Northrop Grumman (97942) General Services Administration (80244) Loctite (05972)	Used to lock threads of threadlock assembly PN 1A20453H01 (find no. 21) on assembly PN 3D56075G01. Used also to lock threads on screw PN MS24693-C2 (find no. 10) and screw PN MS51957-1 (find no. 17) on assembly PN 3D56900G01
Primer	MIL-S-22473, grade N, NSN 8030-00-900-2373; HP12, NSN 8030-00-900-2373	General Services Administration (80244) Hernon Manufacturing (61603)	Used to prime threads of threadlock assembly PN 1A20453H01 (find no. 21) on assembly PN 3D56075G01. Used also to lock threads on screw PN MS24693-C2 (find no. 10) and screw PN MS51957-1 (find no. 17) on assembly PN 3D56900G01

3.4 DISASSEMBLY.- The disassembly of the lookdown driver assembly and removal of its associated subassemblies and parts are obvious; therefore no special instructions are provided. Refer to paragraph 1.7.5 for general disassembly information. For the identification and location of components in the lookdown driver assembly, refer to the assembly drawings and parts lists referenced in paragraph 3.11.

3.5 EXAMINATION AND CLEANING.- There are no special examination or cleaning procedures required for this UUT. Refer to paragraph 1.7.3 for general examination instructions, and refer to paragraph 1.7.4 for general cleaning instructions.

3.6 REPAIR AND REPLACEMENT.- Repair of the lookdown driver assembly is limited to the replacement of removable parts and the repair of obvious external defects. All repairs shall be in accordance with TO 00-25-234, General Shop Practice Requirements for the Repair, Maintenance, and Test of Electrical Equipment. Refer to paragraph 1.8 for repair and replacement procedures that require the use of a particular method or material. When a part must be replaced, select replacement parts from the parts lists referenced in paragraph 3.11. If the fault cannot be isolated and corrected through UUT assembly level testing and standard troubleshooting and repair techniques, then the CCA is condemned at the depot and discarded.

3.7 REASSEMBLY.- The reassembly of the lookdown driver assembly and replacement of its associated subassemblies and parts are obvious; therefore, no special instructions are provided. Refer to paragraph 1.7.5 for general reassembly information. For the identification and location of components in the lookdown driver assembly, refer to the assembly drawings and parts lists referenced in paragraph 3.11.

3.8 TEST DESCRIPTION.- The following paragraphs provide brief descriptions of the performance and diagnostic tests for the lookdown driver assembly. Since the descriptions are for information only, no operator intervention is required. Refer to paragraph 3.9 for the test procedure.

3.8.1 Performance Tests.- The UUT test for the lookdown driver assembly consists of the following performance tests:

Test No.	Test Name
0	Power Supply Test
1	Pulse Integrity Test
2	BITE/Diode Detection Test
3	Return Loss Test
4	RF Power Output of J11 [36V] Test
5	RF Power Output of J11 [38V] Test
6	RF Power Output of J11 [40V] Test
7	Pulse Droop Test
8	Spurious Emissions Test
9	Monitor Port Measurements
10	RF Power Output of J10 [36V] Test
11	RF Power Output of J10 [38V] Test
12	RF Power Output of J10 [40V] Test

3.8.1.1 Test 0 - Power Supply Test.- This test checks power supplies PS1 through PS6 for correct voltages and currents to verify that no power input pins on the UUT connector are open or shorted. The current measurement and voltage measurement capabilities of the power supplies are used for this test.

3.8.1.2 Test 1 - Pulse Integrity Test.- An RF signal is applied to J14 of lookdown driver assembly PN 3D56075G01. Using channel 1 of the oscilloscope, observe the detected RF output from the power sensor which has been connected to J1 on the RF panel and check the pulse integrity. Figure 3-1 shows the criteria for failing the UUT.

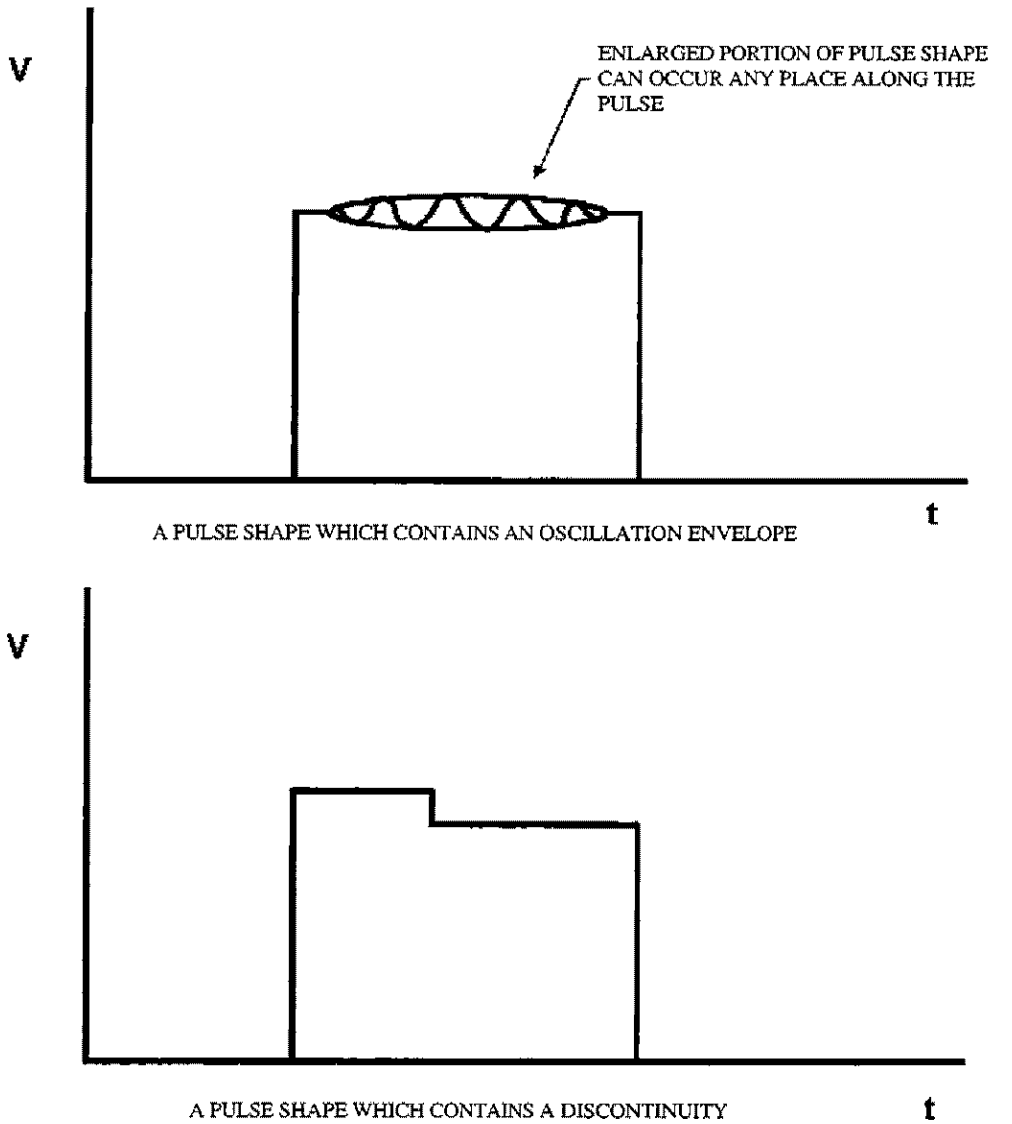

Figure 3-1. Criteria for Rejection of Pulse Integrity Test

3.8.1.3 Test 2 - BITE/Diode Detection Test.- This test checks for correct data from the BITE and diode detection modules on the lookdown driver assembly PN 3D56075G01. These checks are performed with an RF input present and with the RF input removed.

3.8.1.3.1 BITE/Diode Detection Module 1.- An RF signal is applied to J14 of the UUT. Reset signal RM$2-RST is sent to the UUT via differential signal DO0+/-. After 5 seconds, binary data 0xx00000, UUT signal RM$2BB2, is sent via differential signal DO5+/-. One second later strobe signal RM2$BSTB is sent via differential signal DO3+/-. Address data 1xx01011 is now sent. Output signal RM$BB2 must be available on differential signal D12+/- 26.04 us after the address data has been sent and should be greater than or equal to +5.15 volts. The value of the digital data may be converted to an analog voltage value by multiplying the digital count by 39.06 millivolts.

3.8.1.3.2 BITE/Diode Detection Module 2.- An RF signal is applied to J14 of the UUT. Reset signal RM$2-RST is sent to the UUT via differential signal DO0+/-. After 5 seconds, binary data 0xx00001, UUT signal RM$2BB2, is sent via differential signal DO5+/-. One second later strobe signal RM2$BSTB is sent via differential signal DO3+/-. Address data 1xx01011 is now sent. Output signal RM$BB2 must be available on differential signal D12+/- 26.04 us after the address data has been sent and should be greater than or equal to +5.15 volts. The value of the digital data may be converted to an analog voltage value by multiplying the digital count by 39.06 millivolts.

3.8.1.3.3 BITE/Diode Detection Module 3.- An RF signal is applied to J14 of the UUT. Reset signal RM$2-RST is sent to the UUT via differential signal DO0+/-. After 5 seconds, binary data 0xx00010, UUT signal RM$2BB2, is sent via differential signal DO5+/-. One second later strobe signal RM2$BSTB is sent via differential signal DO3+/-. Address data 1xx01011 is now sent. Output signal RM$BB2 must be available on differential signal D12+/- 26.04 us after the address data has been sent and should be greater than or equal to +5.15 volts. The value of the digital data may be converted to an analog voltage value by multiplying the digital count by 39.06 millivolts.

3.8.1.3.4 BITE/Diode Detection Module 4.- An RF signal is applied to J14 of the UUT. Reset signal RM$2-RST is sent to the UUT via differential signal DO0+/-. After 5 seconds, binary data 0xx00011, UUT signal RM$2BB2, is sent via differential signal DO5+/-. One second later strobe signal RM2$BSTB is sent via differential signal DO3+/-. Address data 1xx01011 is now sent. Output signal RM$BB2 must be available on differential signal D12+/- 26.04 us after the address data has been sent and should be greater than or equal to +5.15 volts. The value of the digital data may be converted to an analog voltage value by multiplying the digital count by 39.06 millivolts.

3.8.1.3.5 BITE/Diode Detection UART.- An RF signal is applied to J14 of the UUT. Reset signal RM$2-RST is sent to the UUT via differential signal DO0+/-. After 5 seconds, binary data 0xx00110, UUT signal RM$2BB2, is sent via differential signal DO5+/-. One second later strobe signal RM2$BSTB is sent via differential signal DO3+/-. Address data 1xx01011 is now sent. Output signal RM$BB2 must be available on differential signal D12+/- 26.04 us after the address data has been sent and should be less than +1.40 volts. The value of the digital data may be converted to an analog voltage value by multiplying the digital count by 39.06 millivolts.

3.8.1.3.6 BITE/Diode Detection 7.5 VREF.- An RF signal is applied to J14 of the UUT. Reset signal RM$2-RST is sent to the UUT via differential signal DO0+/-. After 5 seconds, binary data

0xx00111, UUT signal RM$2BB2, is sent via differential signal DO5+/-. One second later strobe signal RM2$BSTB is sent via differential signal DO3+/-. Address data 1xx01011 is now sent. Output signal RM$BB2 must be available on differential signal D12+/- 26.04 us after the address data has been sent and should be greater than or equal to +7.03 volts. The value of the digital data may be converted to an analog voltage value by multiplying the digital count by 39.06 millivolts.

3.8.1.3.7 BITE/Diode Detection Module 1 With No RF Input.- With no RF signal applied to J14 of the UUT, reset signal RM$2-RST is sent to the UUT via differential signal DO0+/-. After 5 seconds, binary data 0xx00000, UUT signal RM$2BB2, is sent via differential signal DO5+/-. One second later strobe signal RM2$BSTB is sent via differential signal DO3+/-. Address data 1xx01011 is now sent. Output signal RM$BB2 must be available on differential signal D12+/- 26.04 us after the address data has been sent and should be less than +5.15 volts. The value of the digital data may be converted to an analog voltage value by multiplying the digital count by 39.06 millivolts.

3.8.1.3.8 BITE/Diode Detection Module 2 With No RF Input.- With no RF signal applied to J14 of the UUT, reset signal RM$2-RST is sent to the UUT via differential signal DO0+/-. After 5 seconds, binary data 0xx00001, UUT signal RM$2BB2, is sent via differential signal DO5+/-. One second later strobe signal RM2$BSTB is sent via differential signal DO3+/-. Address data 1xx01011 is now sent. Output signal RM$BB2 must be available on differential signal D12+/- 26.04 us after the address data has been sent and should be less than +5.15 volts. The value of the digital data may be converted to an analog voltage value by multiplying the digital count by 39.06 millivolts.

3.8.1.3.9 BITE/Diode Detection Module 3 With No RF Input.- With no RF signal applied to J14 of the UUT, reset signal RM$2-RST is sent to the UUT via differential signal DO0+/-. After 5 seconds, binary data 0xx00010, UUT signal RM$2BB2, is sent via differential signal DO5+/-. One second later strobe signal RM2$BSTB is sent via differential signal DO3+/-. Address data 1xx01011 is now sent. Output signal RM$BB2 must be available on differential signal D12+/- 26.04 us after the address data has been sent and should be less than +5.15 volts. The value of the digital data may be converted to an analog voltage value by multiplying the digital count by 39.06 millivolts.

3.8.1.3.10 BITE/Diode Detection Module 4 With No RF Input.- With no RF signal applied to J14 of the UUT, reset signal RM$2-RST is sent to the UUT via differential signal DO0+/-. After 5 seconds, binary data 0xx00011, UUT signal RM$2BB2, is sent via differential signal DO5+/-. One second later strobe signal RM2$BSTB is sent via differential signal DO3+/-. Address data 1xx01011 is now sent. Output signal RM$BB2 must be available on differential signal D12+/- 26.04 us after the address data has been sent and should be less than +5.15 volts. The value of the digital data may be converted to an analog voltage value by multiplying the digital count by 39.06 millivolts.

3.8.1.3.11 BITE/Diode Detection UART With No RF Input.- With no RF signal applied to J14 of the UUT, reset signal RM$2-RST is sent to the UUT via differential signal DO0+/-. After 5 seconds, binary data 0xx00110, UUT signal RM$2BB2, is sent via differential signal DO5+/-. One second later strobe signal RM2$BSTB is sent via differential signal DO3+/-. Address data

1xx01011 is now sent. Output signal RM$BB2 must be available on differential signal D12+/- 26.04 us after the address data has been sent and should be less than +1.40 volts. The value of the digital data may be converted to an analog voltage value by multiplying the digital count by 39.06 millivolts.

3.8.1.3.12 BITE/Diode Detection 7.5 VREF With No RF Input.- With no RF signal applied to J14 of the UUT, reset signal RM$2-RST is sent to the UUT via differential signal DO0+/-. After 5 seconds, binary data 0xx00111, UUT signal RM$2BB2, is sent via differential signal DO5+/-. One second later strobe signal RM2$BSTB is sent via differential signal DO3+/-. Address data 1xx01011 is now sent. Output signal RM$BB2 must be available on differential signal D12+/- 26.04 us after the address data has been sent and should be greater than or equal to +7.03 volts. The value of the digital data may be converted to an analog voltage value by multiplying the digital count by 39.06 millivolts.

3.8.1.4 Test 3 - Return Loss Test.- This test determines the input return loss of the UUT. The return loss is determined by the formula:

Return Loss (dB) = -(Reflected Power - Input Power)

3.8.1.4.1 J14 Return Loss At 1215 MHz.- A 1215-MHz RF signal is applied to J14 of lookdown driver assembly PN 3D56075G01. The reflected power at UUT connector J14 is measured and the return loss is calculated. The return loss must be greater than or equal to 17 dB.

3.8.1.4.2 J14 Return Loss At 1400 MHz.- A 1400-MHz RF signal is applied to J14 of the UUT. The reflected power at UUT connector J14 is measured and the return loss is calculated. The return loss must be greater than or equal to 17 dB.

3.8.1.5 Test 4 - RF Power Output of J11 [36V] Test.- This test checks the RF power output at UUT connector J11 with an input voltage of +36 Vdc. UUT connector J10 is terminated with a 50-ohm termination. This test is performed at five frequencies.

3.8.1.5.1 RF Power Output of J11 [36V] At 1215 MHz.- A 1215-MHz RF signal is applied to J14 of the UUT with the output of PS5 adjusted for +36 Vdc. The signal at UUT connector J11 is measured to verify that the peak power output is greater than or equal to 760 watts.

3.8.1.5.2 RF Power Output of J11 [36V] At 1250 MHz.- A 1250-MHz RF signal is applied to J14 of the UUT with the output of PS5 adjusted for +36 Vdc. The signal at UUT connector J11 is measured to verify that the peak power output is greater than or equal to 760 watts.

3.8.1.5.3 RF Power Output of J11 [36V] At 1300 MHz.- A 1300-MHz RF signal is applied to J14 of the UUT with the output of PS5 adjusted for +36 Vdc. The signal at UUT connector J11 is measured to verify that the peak power output is greater than or equal to 760 watts.

3.8.1.5.4 RF Power Output of J11 [36V] At 1350 MHz.- A 1350-MHz RF signal is applied to J14 of the UUT with the output of PS5 adjusted for +36 Vdc. The signal at UUT connector J11 is measured to verify that the peak power output is greater than or equal to 760 watts.

3.8.1.5.5 RF Power Output of J11 [36V] At 1400 MHz.- A 1400-MHz RF signal is applied to J14 of the UUT with the output of PS5 adjusted for +36 Vdc. The signal at UUT connector J11 is measured to verify that the peak power output is greater than or equal to 760 watts.

3.8.1.6 Test 5 - RF Power Output of J11 [38V] Test.- This test checks the RF power output at UUT connector J11 with an input voltage of +38 Vdc. UUT connector J10 is terminated with a 50-Ohm termination. This test is performed at five frequencies.

3.8.1.6.1 RF Power Output of J11 [38V] At 1215 MHz.- A 1215-MHz RF signal is applied to J14 of the UUT with the output of PS5 adjusted for +38 Vdc. The signal at UUT connector J11 is measured to verify that the peak power output is greater than or equal to 880 watts.

3.8.1.6.2 RF Power Output of J11 [38V] At 1250 MHz.- A 1250-MHz RF signal is applied to J14 of the UUT with the output of PS5 adjusted for +38 Vdc. The signal at UUT connector J11 is measured to verify that the peak power output is greater than or equal to 880 watts.

3.8.1.6.3 RF Power Output of J11 [38V] At 1300 MHz.- A 1300-MHz RF signal is applied to J14 of the UUT with the output of PS5 adjusted for +38 Vdc. The signal at UUT connector J11 is measured to verify that the peak power output is greater than or equal to 880 watts.

3.8.1.6.4 RF Power Output of J11 [38V] At 1350 MHz.- A 1350-MHz RF signal is applied to J14 of the UUT with the output of PS5 adjusted for +38 Vdc. The signal at UUT connector J11 is measured to verify that the peak power output is greater than or equal to 880 watts.

3.8.1.6.5 RF Power Output of J11 [38V] At 1400 MHz.- A 1400-MHz RF signal is applied to J14 of the UUT with the output of PS5 adjusted for +38 Vdc. The signal at UUT connector J11 is measured to verify that the peak power output is greater than or equal to 880 watts.

3.8.1.7 Test 6 - RF Power Output of J11 [40V] Test.- This test checks the RF power output at UUT connector J11 with an input voltage of +40 Vdc. UUT connector J10 is terminated with a 50-ohm termination. This test is performed at five frequencies.

3.8.1.7.1 RF Power Output of J11 [40V] At 1215 MHz.- A 1215-MHz RF signal is applied to J14 of the UUT with the output of PS5 adjusted for +40 Vdc. The signal at UUT connector J11 is measured to verify that the peak power output is greater than or equal to 1000 watts.

3.8.1.7.2 RF Power Output of J11 [40V] At 1250 MHz.- A 1250-MHz RF signal is applied to J14 of the UUT with the output of PS5 adjusted for +40 Vdc. The signal at UUT connector J11 is measured to verify that the peak power output is greater than or equal to 1000 watts.

3.8.1.7.3 RF Power Output of J11 [40V] At 1300 MHz.- A 1300-MHz RF signal is applied to J14 of the UUT with the output of PS5 adjusted for +40 Vdc. The signal at UUT connector J11 is measured to verify that the peak power output is greater than or equal to 1000 watts.

3.8.1.7.4 RF Power Output of J11 [40V] At 1350 MHz.- A 1350-MHz RF signal is applied to J14 of the UUT with the output of PS5 adjusted for +40 Vdc. The signal at UUT connector J11 is measured to verify that the peak power output is greater than or equal to 1000 watts.

3.8.1.7.5 RF Power Output of J11 [40V] At 1400 MHz.- A 1400-MHz RF signal is applied to J14 of the UUT with the output of PS5 adjusted for +40 Vdc. The signal at UUT connector J11 is measured to verify that the peak power output is greater than or equal to 1000 watts.

3.8.1.8 Test 7 - Pulse Droop Test.- This test determines the droop in the detected output signal at UUT connector J11. UUT connector J10 is terminated with a 50-Ohm termination. Pulse droop is checked at three frequencies.

3.8.1.8.1 Pulse Droop At 1215 MHz.- A 1215-MHz, pulsed RF signal is applied to J14 of lookdown driver assembly PN 3D56075G01. Using the power meter, the pulse droop of the signal at UUT connector J11 is measured to verify that it is less than or equal to 1 dB.

3.8.1.8.2 Pulse Droop At 1300 MHz.- A 1300-MHz, pulsed RF signal is applied to J14 of lookdown driver assembly PN 3D56075G01. Using the power meter, the pulse droop of the signal at UUT connector J11 is measured to verify that it is less than or equal to 1 dB.

3.8.1.8.3 Pulse Droop At 1400 MHz.- A 1400-MHz, pulsed RF signal is applied to J14 of lookdown driver assembly PN 3D56075G01. Using the power meter, the pulse droop of the signal at UUT connector J11 is measured to verify that it is less than or equal to 1 dB.

3.8.1.9 Test 8 - Spurious Emissions Test.- A 1215-MHz pulsed RF signal is applied to J14 of lookdown driver assembly PN 3D56075G01. UUT connector J10 is terminated with a 50-ohm termination. The largest observed spurious emission around 1215 MHz on J11 is measured using the spectrum analyzer, with the span set at a start frequency of 10 MHz and a stop frequency of 2000 MHz, to verify that delta is greater than or equal to 60 dB.

3.8.1.10 Test 9 - Monitor Port Measurements.- An RF signal is applied to J14 of lookdown driver assembly PN 3D56075G01. UUT connectors J10 and J11 are terminated with 50-ohm terminations. The RF output power of the blind mate connector at port P1 is measured to verify that it is 14 (±2) dBm. This test is performed at three carrier frequencies.

3.8.1.10.1 Power Output of P1 At 1215 MHz.- A 1215-MHz, pulsed RF signal is applied to J14 of lookdown driver assembly PN 3D56075G01. Using the power meter, the power of the signal at UUT connector P1 is measured to verify that it is 14 (±2) dB.

3.8.1.10.2 Power Output of P1 At 1300 MHz.- A 1300-MHz, pulsed RF signal is applied to J14 of lookdown driver assembly PN 3D56075G01. Using the power meter, the power of the signal at UUT connector P1 is measured to verify that it is 14 (±2) dB.

3.8.1.10.3 Power Output of P1 At 1400 MHz.- A 1400-MHz, pulsed RF signal is applied to J14 of lookdown driver assembly PN 3D56075G01. Using the power meter, the power of the signal at UUT connector P1 is measured to verify that it is 14 (±2) dB.

3.8.1.11 Test 10 - RF Power Output of J10 [36V] Test.- This test checks the RF power output at UUT connector J10 with an input voltage of +36 Vdc. UUT connector J11 is terminated with a 50-ohm termination. This test is performed at five frequencies.

3.8.1.11.1 RF Power Output of J10 [36V] At 1215 MHz.- A 1215-MHz RF signal is applied to J14 of the UUT with the output of PS5 adjusted for +36 Vdc. The signal at UUT connector J10 is measured to verify that the peak power output is greater than or equal to 760 watts.

3.8.1.11.2 RF Power Output of J10 [36V] At 1250 MHz.- A 1250-MHz RF signal is applied to J14 of the UUT with the output of PS5 adjusted for +36 Vdc. The signal at UUT connector J10 is measured to verify that the peak power output is greater than or equal to 760 watts.

3.8.1.11.3 RF Power Output of J10 [36V] At 1300 MHz.- A 1300-MHz RF signal is applied to J14 of the UUT with the output of PS5 adjusted for +36 Vdc. The signal at UUT connector J10 is measured to verify that the peak power output is greater than or equal to 760 watts.

3.8.1.11.4 RF Power Output of J10 [36V] At 1350 MHz.- A 1350-MHz RF signal is applied to J14 of the UUT with the output of PS5 adjusted for +36 Vdc. The signal at UUT connector J10 is measured to verify that the peak power output is greater than or equal to 760 watts.

3.8.1.11.5 RF Power Output of J10 [36V] At 1400 MHz.- A 1400-MHz RF signal is applied to J14 of the UUT with the output of PS5 adjusted for +36 Vdc. The signal at UUT connector J10 is measured to verify that the peak power output is greater than or equal to 760 watts.

3.8.1.12 Test 11 - RF Power Output of J10 [38V] Test.- This test checks the RF power output at UUT connector J10 with an input voltage of +38 Vdc. UUT connector J10 is terminated with a 50-Ohm termination. This test is performed at five frequencies.

3.8.1.12.1 RF Power Output of J10 [38V] At 1215 MHz.- A 1215-MHz RF signal is applied to J14 of the UUT with the output of PS5 adjusted for +38 Vdc. The signal at UUT connector J10 is measured to verify that the peak power output is greater than or equal to 880 watts.

3.8.1.12.2 RF Power Output of J10 [38V] At 1250 MHz.- A 1250-MHz RF signal is applied to J14 of the UUT with the output of PS5 adjusted for +38 Vdc. The signal at UUT connector J10 is measured to verify that the peak power output is greater than or equal to 880 watts.

3.8.1.12.3 RF Power Output of J10 [38V] At 1300 MHz.- A 1300-MHz RF signal is applied to J14 of the UUT with the output of PS5 adjusted for +38 Vdc. The signal at UUT connector J10 is measured to verify that the peak power output is greater than or equal to 880 watts.

3.8.1.12.4 RF Power Output of J10 [38V] At 1350 MHz.- A 1350-MHz RF signal is applied to J14 of the UUT with the output of PS5 adjusted for +38 Vdc. The signal at UUT connector J10 is measured to verify that the peak power output is greater than or equal to 880 watts.

3.8.1.12.5 RF Power Output of J10 [38V] At 1400 MHz.- A 1400-MHz RF signal is applied to J14 of the UUT with the output of PS5 adjusted for +38 Vdc. The signal at UUT connector J10 is measured to verify that the peak power output is greater than or equal to 880 watts.

3.8.1.13 Test 12 - RF Power Output of J10 [40V] Test.- This test checks the RF power output at UUT connector J10 with an input voltage of +40 Vdc. UUT connector J11 is terminated with a 50-Ohm termination. This test is performed at five frequencies.

3.8.1.13.1 RF Power Output of J10 [40V] At 1215 MHz.- A 1215-MHz RF signal is applied to J14 of the UUT with the output of PS5 adjusted for +40 Vdc. The signal at UUT connector J10 is measured to verify that the peak power output is greater than or equal to 1000 watts.

3.8.1.13.2 RF Power Output of J10 [40V] At 1250 MHz.- A 1250-MHz RF signal is applied to J14 of the UUT with the output of PS5 adjusted for +40 Vdc. The signal at UUT connector J10 is measured to verify that the peak power output is greater than or equal to 1000 watts.

3.8.1.13.3 RF Power Output of J10 [40V] At 1300 MHz.- A 1300-MHz RF signal is applied to J14 of the UUT with the output of PS5 adjusted for +40 Vdc. The signal at UUT connector J10 is measured to verify that the peak power output is greater than or equal to 1000 watts.

3.8.1.13.4 RF Power Output of J10 [40V] At 1350 MHz.- A 1350-MHz RF signal is applied to J14 of the UUT with the output of PS5 adjusted for +40 Vdc. The signal at UUT connector J10 is measured to verify that the peak power output is greater than or equal to 1000 watts.

3.8.1.13.5 RF Power Output of J10 [40V] At 1400 MHz.- A 1400-MHz RF signal is applied to J14 of the UUT with the output of PS5 adjusted for +40 Vdc. The signal at UUT connector J10 is measured to verify that the peak power output is greater than or equal to 1000 watts.

3.8.2 Diagnostic Tests.- The fault isolation software is designed to identify the faulty component whenever a UUT performance test fails. Once a failure has been detected, the test program determines the tests to be run in order to gain additional data necessary to isolate to a specific component or fault ambiguity group. The tests may be selected from either the diagnostic tests or the performance tests. The operator may be prompted to remove the UUT cover, attach an extender board and probe specified points. Once the fault has been isolated, a diagnostic message specifying the failed component or fault ambiguity group is displayed to the operator. If an ambiguity group is specified, the operator is responsible for isolating to the failed component.

3.9 TEST PROCEDURE.- Perform the following procedure to run the UUT test for lookdown driver assembly 3D56075G01 on the PAMTS. The UUT test is used as a troubleshooting aid to identify suspected faults before repair is initiated. The UUT test for the lookdown driver assembly consists of the performance tests listed in Table 3-2. Table 3-2 also lists the UUT node that is checked and the expected value of the response for each test. Proceed as follows:

1. At the computer/controller workstation, initialize the Test Executive Program per paragraph 1.9.2. When instructed to select the desired UUT test in the Select Test Menu, choose the Lookdown Driver option and click the Run button to initiate the test on the lookdown driver assembly.
2. Follow the on-line instructions on the computer monitor screen to perform the test.
3. When the test for the lookdown driver assembly is completed, exit the Test Executive Program per paragraph 1.9.3.

Table 3-2. Performance Tests for PN 3D56075G01

Test Number	Test Name	UUT Test Node	Expected Response
0	Power Supply Test		
	PS1 Current Check	J2-A5	≤+0.6 Amps
	PS1 Voltage Check	J2-A5	+5 (±0.5)Vdc
	PS2 Current Check	J2-A7	≤+0.6 Amps
	PS2 Voltage Check	J2-A7	+15.0 (±0.5) Vdc
	PS3 Current Check	J2-07, J2-09	≤+0.8 Amps
	PS3 Voltage Check	J2-07, J2-09	-15.0 (±0.5) Vdc
	PS4 Current Check	---	≤+3.5 Amps
	PS4 Voltage Check	---	+29.0 (±0.2) Vdc
	PS5 Current Check	J2-A1	≤+15.0 Amps
	PS5 Voltage Check	J2-A1	+40.0 (±0.2) Vdc
	PS6 Current Check	---	≤+2.2 Amps
	PS6 Voltage Check	---	+33.0 (±0.3) Vdc
1	Pulse Integrity Test	J14	See Figure 3-1.
2	BITE/Diode Detection Test		
	BITE/Diode Detection Module 1	J1-22/J1-10	≥+5.15 Vdc
	BITE/Diode Detection Module 2	J1-22/J1-10	≥+5.15 Vdc
	BITE/Diode Detection Module 3	J1-22/J1-10	≥+5.15 Vdc
	BITE/Diode Detection Module 4	J1-22/J1-10	≥+5.15 Vdc
	BITE/Diode Detection UART	J1-22/J1-10	<+1.40 Vdc
	BITE/Diode Detection 7.5 VREF	J1-22/J1-10	≥+7.03. Vdc
	BITE/Diode Detection Module 1 No RF	J1-22/J1-10	<+5.15 Vdc
	BITE/Diode Detection Module 2 No RF	J1-22/J1-10	<+5.15 Vdc
	BITE/Diode Detection Module 3 No RF	J1-22/J1-10	<+5.15 Vdc
	BITE/Diode Detection Module 4 No RF	J1-22/J1-10	<+5.15 Vdc
	BITE/Diode Detection UART No RF	J1-22/J1-10	<+1.40 Vdc
	BITE/Diode Detection 7.5 VREF No RF	J1-22/J1-10	≥+7.03. Vdc
3	Return Loss Test		
	at 1215 MHz	J14	≥ 17 dB
	at 1400 MHz	J14	≥ 17 dB
4	RF Power Output of J11 [36V]		
	at 1215 MHz	J11	≥760 Watts
	at 1250 MHz	J11	≥760 Watts
	at 1300 MHz	J11	≥760 Watts
	at 1350 MHz	J11	≥760 Watts
	at 1400 MHz	J11	≥760 Watts

Table 3-2. Performance Tests for PN 3D56075G01–Continued

Test Number	Test Name	UUT Test Node	Expected Response
5	RF Power Output of J11 [38V]		
	at 1215 MHz	J11	≥880 Watts
	at 1250 MHz	J11	≥880 Watts
	at 1300 MHz	J11	≥880 Watts
	at 1350 MHz	J11	≥880 Watts
	at 1400 MHz	J11	≥880 Watts
6	RF Power Output of J11 [40V]		
	at 1215 MHz	J11	≥1000 Watts
	at 1250 MHz	J11	≥1000 Watts
	at 1300 MHz	J11	≥1000 Watts
	at 1350 MHz	J11	≥1000 Watts
	at 1400 MHz	J11	≥1000 Watts
7	Pulse Droop Test:		
	at 1215 MHz	J11	≤1 dB
	at 1300 MHz	J11	≤1 dB
	at 1400 MHz	J11	≤1 dB
8	Spurious Emissions Test	J11	≥60 dB
9	Monitor Port Measurements:		
	at 1215 MHz	P1	14 (±2) dBm
	at 1300 MHz	P1	14 (±2) dBm
	at 1400 MHz	P1	14 (±2) dBm
10	RF Power Output of J10 [36V]		
	at 1215 MHz	J10	≥760 Watts
	at 1250 MHz	J10	≥760 Watts
	at 1300 MHz	J10	≥760 Watts
	at 1350 MHz	J10	≥760 Watts
	at 1400 MHz	J10	≥760 Watts
11	RF Power Output of J10 [38V]		
	at 1215 MHz	J10	≥880 Watts
	at 1250 MHz	J10	≥880 Watts
	at 1300 MHz	J10	≥880 Watts
	at 1350 MHz	J10	≥880 Watts
	at 1400 MHz	J10	≥880 Watts

Table 3-2. Performance Tests for PN 3D56075G01--Continued

Test Number	Test Name	UUT Test Node	Expected Response
12	RF Power Output of J10 [40V]		
	at 1215 MHz	J10	≥1000 Watts
	at 1250 MHz	J10	≥1000 Watts
	at 1300 MHz	J10	≥1000 Watts
	at 1350 MHz	J10	≥1000 Watts
	at 1400 MHz	J10	≥1000 Watts

3.10 TROUBLESHOOTING.- There are no special troubleshooting procedures required for this UUT. If a failure occurs during the UUT performance tests, the operator can initiate on-line diagnostics to help isolate the fault. If a fault is detected, the on-line diagnostics display a conclusion which identifies the faulty circuit or active component and/or the reference designation of the active component that is the most likely cause of the failure. Refer to paragraph 1.10 for general troubleshooting information.

3.11 ASSEMBLY DRAWINGS AND PARTS LISTS.- Assembly drawings and parts lists are provided to identify and show the location of parts for the lookdown driver assembly. The assembly drawings, located in Appendix B in an 11-inch by 17-inch flat-pak format, consist of the following:

Assembly Drawing	Title
3D56075	Lookdown driver assembly
3D56076	Power amplifier module
3D56899	16:1 combiner
3D56900	1:4 splitter
3D57165	Output monitor
3D57239	1:2 splitter
3D57241	CCA, BITE (lookdown driver)
3D57263	1:2 uneven splitter
3D57264	Switch assembly
3D57505	BITE/capacitor CCA

Each assembly drawing has an associated parts list (PL). The separate PLs are located in Appendix C. The find number for each item in a PL corresponds to the callout number for the item on the associated assembly drawing.

3.12 WIRE DATA.- All wire data for the lookdown driver assembly is located in Appendix D. The wire data (wire list and wiring diagrams) consists of the following:

Drawing Number	Title
3A18371	Wiring List - Xmtr Lookdown Driver
3A18458	Flex List, Cable A - 1:4 Splitter
3D57572	Post Wired Assembly, Cable B - Lookdown Driver
PL3A18378	Wiring Diagram, Cable C - Lookdown Driver

Wiring diagrams 3D57572 and 3A18458 have associated PLs that are located in Appendix C. Wiring diagram 3A18378 is a PL only and has no associated graphic. Refer to Appendix C for PL3A18378.

CHAPTER 4

POWER MODULE CCA PN 3D56076G01, G02 REPAIR

4.1 SCOPE.- This chapter contains depot maintenance repair data for power module CCA PN 3D56076G01, G02. The repair data identifies the tools, test equipment, and consumable material needed to support repair and provides information for the disassembly, examination and cleaning, repair, component replacement, reassembly, test, and troubleshooting for the power module CCA. Assembly drawings and parts lists are provided to identify the location of components and provide parts ordering information. The ARSR-4 System reference designations for the power module CCA are too numerous to mention. Repair data is provided also for the following power module CCA subassembly:

Subassembly/CCA	Part No.
BITE/capacitor CCA A1	3D57505G01, G02

CAUTION

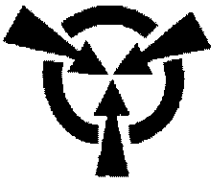

This unit contains electrostatic discharge (ESD) sensitive devices. Refer to DOD-STD-1686 and DOD-HDBK-263 for proper ESD precautions to use when handling this unit. Failure to use proper ESD precautions could result in damage to ESD sensitive devices.

4.2 TOOLS AND TEST EQUIPMENT.- The following tools and test equipment are required for the test and repair of the power module CCA:

PAM test set

Test fixture, power amplifier module (AD421410G01)

Cable Assy, semi-rigid (AD421965G01)

Cable Assy, semi-rigid (AD421966G01)

Phase Reference Assembly (AA421645G01)

4.3 CONSUMABLE MATERIAL.- Depending on the procedure required, the consumable materials listed in Table 4-1 or their equivalents may be required for the test and repair of the power module CCA. The Remarks column in Table 4-1 identifies the part on the assembly drawing/parts list for the power module CCA or subassembly that requires the use of consumable material. Refer to paragraph 1.8 for application procedures for consumable material.

Table 4-1. Consumable Material Required for PN 3D56076G01, G02

Name	Part Number/ Type/Model/Spec	Manufacturer (CAGE)	Remarks
Adhesive, epoxy, silver filled	M53311EQ;	Northrop Grumman (97942)	Used to mount resistor R2 (PN 1A20212H21) (find no. 5), resistors R3 and R4 (PN 1A20212H02) (find no. 6), and resistor R1 (PN 1A20212H65) (find no. 26) on assembly PN 3D56076G01, G02
	Ablebond 84-1LMI NB-1, NSN 8040-01-339-8655	Ablestik Laboratories (21109)	
Adhesive, epoxy, thermally-conductive, dielectric	M53320TW;	Northrop Grumman (97942)	Used to mount LED mount (PN 1A21069H01) (find no. 16) on assembly PN 3D57505G01, G02
	Epo-Tek H74	Epoxy Technology (33246)	

4.4 DISASSEMBLY.- The disassembly of the power module CCA and removal of its associated subassemblies and parts are obvious; therefore no special instructions are provided. Refer to paragraph 1.7.5 for general disassembly information. For the identification and location of components in the power module CCA, refer to the assembly drawings and parts lists referenced in paragraph 4.11.

4.5 EXAMINATION AND CLEANING.- There are no special examination or cleaning procedures required for this UUT. Refer to paragraph 1.7.3 for general examination instructions, and refer to paragraph 1.7.4 for general cleaning instructions.

4.6 REPAIR AND REPLACEMENT.- Repair of the power module CCA is limited to the replacement of removable parts and the repair of obvious external defects. All repairs shall be in accordance with TO 00-25-234, General Shop Practice Requirements for the Repair, Maintenance, and Test of Electrical Equipment. Refer to paragraph 1.8 for repair and replacement procedures that require the use of a particular method or material. When a part must be replaced, select replacement parts from the parts lists referenced in paragraph 4.11. If the fault cannot be isolated and corrected through UUT assembly level testing and standard troubleshooting and repair techniques, then the CCA is condemned at the depot and discarded.

4.7 REASSEMBLY.- The reassembly of the power module CCA and replacement of its associated subassemblies and parts are obvious; therefore, no special instructions are provided. Refer to paragraph 1.7.5 for general reassembly information. For the identification and location of components in the power module CCA, refer to the assembly drawings and parts lists referenced in paragraph 4.11.

4.8 TEST DESCRIPTION.- The following paragraphs provide brief descriptions of the performance and diagnostic tests for the power module CCA. Since the descriptions are for information only, no operator intervention is required. Refer to paragraph 4.9 for the test procedure.

4.8.1 Performance Tests.- The UUT test for the power module CCA consists of the following performance tests:

Test No.	Test Name
0	Return Loss Test
1	BITE/Cap Test
2	Output Power Test
3	Output Flatness Test
4	Average Current Draw Test
5	Insertion Phase Measurement
6	Spurious Emissions Test

4.8.1.1 Test 0 - Return Loss Test.- This test checks the input return loss, which is determined by the formula:

Return Loss (dB) = -(Reflected Power - Input Power)

The reflected power at UUT terminal E9, the input to transistor Q1, is measured and the return loss is calculated.

4.8.1.1.1 Q1 Return Loss At 1215 MHz.- This test measures the reflected power at a frequency of 1215 MHz and verifies that the return loss is greater than or equal to 7 dB.

4.8.1.1.2 Q1 Return Loss At 1250 MHz.- This test measures the reflected power at a frequency of 1250 MHz and verifies that the return loss is greater than or equal to 7 dB.

4.8.1.1.3 Q1 Return Loss At 1300 MHz.- This test measures the reflected power at a frequency of 1300 MHz and verifies that the return loss is greater than or equal to 7 dB.

4.8.1.1.4 Q1 Return Loss At 1350 MHz.- This test measures the reflected power at a frequency of 1350 MHz and verifies that the return loss is greater than or equal to 9 dB.

4.8.1.1.5 Q1 Return Loss At 1400 MHz.- This test measures the reflected power at a frequency of 1400 MHz and verifies that the return loss is greater than or equal to 9 dB.

4.8.1.2 Test 1 - BITE/Cap Test.- This test applies a 1215-MHz, pulsed RF input signal to UUT input terminal E9. The operating voltage is adjusted to +36.0 (±0.2) Vdc and applied to UUT terminal E1. Measurements are then made to verify that capacitor bank A1 on the UUT is operating correctly.

4.8.1.2.1 BITE/Cap Input Voltage.- This test uses the digital multimeter (DMM) to measure the BITE/Cap input voltage between UUT connector J1-3 (PW*$40VSMP) and J1-4 (PW*$SMPRTN). The measured value must be +36.0 (±0.5) Vdc.

4.8.1.2.2 BITE/Cap Output Voltage.- This test uses the oscilloscope to measure the BITE/Cap output voltage at UUT terminal E8. The measured value must be in the range from +6.1 Vdc to +7.7 Vdc.

4.8.1.2.3 BITE/Cap Droop.- This test uses the oscilloscope to measure the BITE/Cap droop between UUT terminal E8 and ground. The measured value must be less than or equal to +0.5 Vdc.

4.8.1.3 Test 2 - Output Power Test.- This test combines tests of the UUT output power with a pulse integrity test. The pulse integrity test uses the input conditions of the output power test at 1400 MHz.

4.8.1.3.1 Output Power At 1215 MHz.- This test uses the power meter to measure the combined output power at a frequency of 1215 MHz and verify that the output power is greater than or equal to 980 Watts peak.

4.8.1.3.2 Output Power At 1250 MHz.- This test uses the power meter to measure the combined output power at a frequency of 1250 MHz and verify that the output power is greater than or equal to 980 Watts peak.

4.8.1.3.3 Output Power At 1300 MHz.- This test uses the power meter to measure the combined output power at a frequency of 1300 MHz and verify that the output power is greater than or equal to 980 Watts peak.

4.8.1.3.4 Output Power At 1350 MHz.- This test uses the power meter to measure the combined output power at a frequency of 1350 MHz and verify that the output power is greater than or equal to 900 Watts peak.

4.8.1.3.5 Output Power At 1400 MHz.- This test uses the power meter to measure the combined output power at a frequency of 1400 MHz and verify that the output is greater than or equal to 900 Watts peak.

4.8.1.3.6 Pulse Integrity.- This test uses the RF detected output from the power sensor which is connected to J1 on the RF panel. Oscilloscope channel 1 is monitored and the pulse integrity of the detected output is checked to verify that there are no oscillations or discontinuities on the detected pulse. Figure 4-1 shows the criteria for failing the UUT.

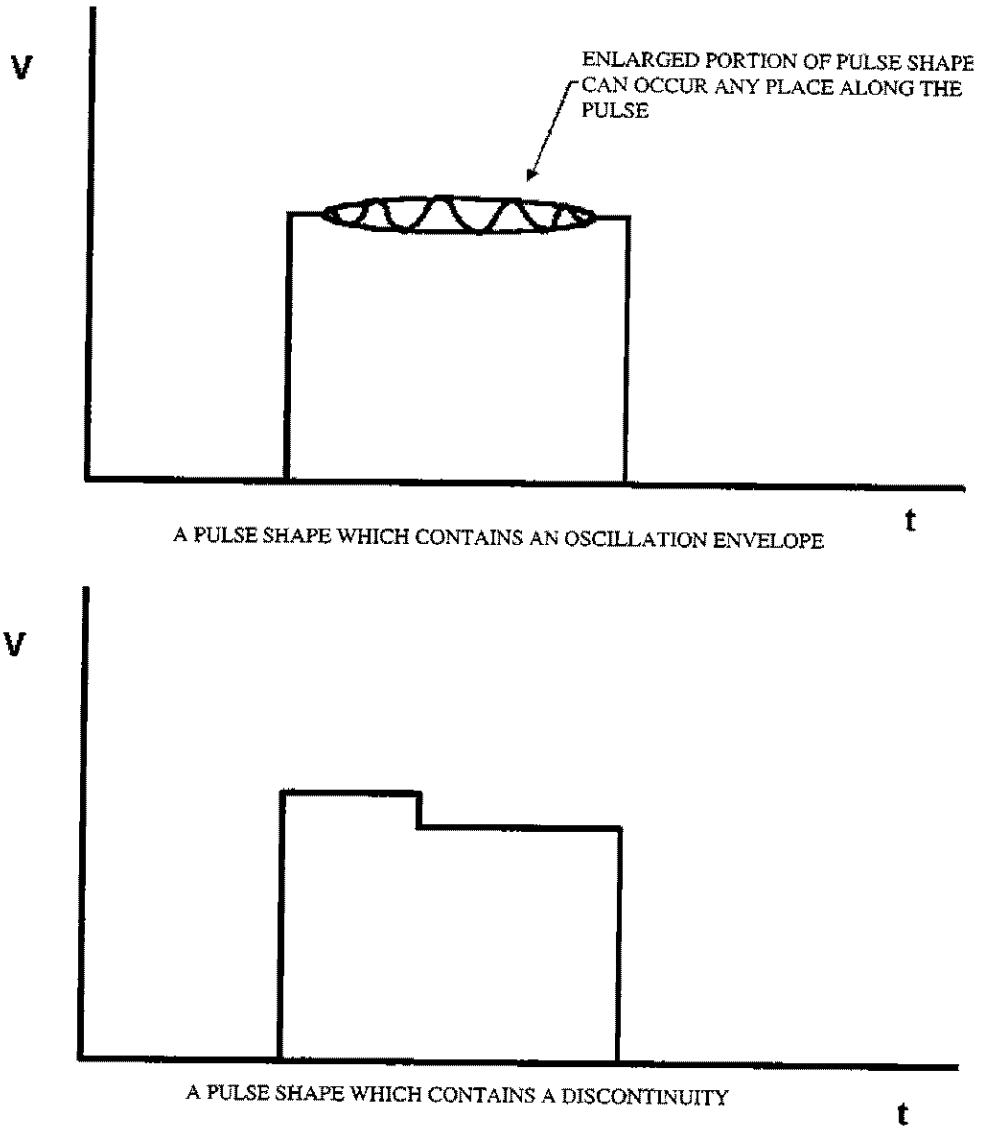

Figure 4-1. Criteria for Rejection of Pulse Integrity Test

4.8.1.4 Test 3 - Output Flatness Test.- This test verifies that the flatness of the output signal does not vary by more than 1 dB across the frequency band from 1215 MHz to 1400 MHz.

4.8.1.4.1 Output Flatness At 1215 MHz.- This test measures the combined power output signal at a frequency of 1215 MHz and verifies that the flatness is less than or equal to 1 dB.

4.8.1.4.2 Output Flatness At 1300 MHz.- This test measures the combined power output signal at a frequency of 1300 MHz and verifies that the flatness is less than or equal to 1 dB.

4.8.1.4.3 Output Flatness At 1400 MHz.- This test measures the combined power output signal at a frequency of 1400 MHz and verifies that the flatness is less than or equal to 1 dB.

4.8.1.5 Test 4 - Average Current Draw Test.- This test verifies that the average current draw for output transistors Q2 through Q5 is within specification. The average current draw for transistors Q2 through Q5 is determined by the following formula:

Average Current = Peak Current X Duty Cycle

4.8.1.5.1 Average Current Draw At 1215 MHz.- The average current draw at a carrier frequency of 1215 MHz is measured using the DMM and verified to be less than or equal to 295 mA.

4.8.1.5.2 Average Current Draw At 1300 MHz.- The average current draw at a carrier frequency of 1300 MHz is measured using the DMM and verified to be less than or equal to 280 mA.

4.8.1.5.3 Average Current Draw At 1400 MHz.- The average current draw at a carrier frequency of 1400 MHz is measured using the DMM and verified to be less than or equal to 275 mA. There are no average current draw requirements at 1250 MHz and 1350 MHz.

4.8.1.6 Test 5 - Insertion Phase Measurement.- This test measures the insertion phase of the UUT at a frequency of 1400 MHz using the power meters and the six port reflectometer. A phase reference standard is connected to the PAM test set in place of the UUT and calibrated at 1400 MHz. The UUT is then connected to the PAM test set in place of the phase reference standard and the measurement is repeated. The insertion phase must be within 35 (±5) degrees of the phase reference standard with the measurement in the positive delay.

4.8.1.7 Test 6 - Spurious Emissions Test.- This test checks the output of the UUT for spurious emissions. This test is conducted over a wide frequency spectrum and over a narrow frequency spectrum.

4.8.1.7.1 Wide Band Spurious Emissions Test.- A pulsed input RF signal at a carrier frequency of 1215 MHz is applied to the UUT. Using the spectrum analyzer with the span set with a start frequency of 10 MHz and a stop frequency of 2000 MHz, the largest observed spurious emission is measured. Excluding the rolling noise floor and the band from 1015 MHz to 1415 MHz, the delta shall be greater than or equal to 60 dB.

4.8.1.7.2 Narrow Band Spurious Emissions Test.- A pulsed input RF signal at a carrier frequency of 1215 MHz is applied to the UUT. Using the spectrum analyzer with the span set with a start frequency of 1015 MHz and a stop frequency of 1415 MHz, the largest observed spurious emission is measured. Excluding the rolling noise floor, the delta shall be greater than or equal to 60 dB.

4.8.2 Diagnostic Tests.- There are two types of diagnostic tests for power module CCA PN 3D56076G01, G02. One type of diagnostic testing is the troubleshooting that occurs when a failure is detected. This type of diagnostic test is guided by instructions provided by the PAM test set, as explained in paragraph 4.8.2.1. The second type of diagnostic is the tuning that may be necessary when components have been replaced on power module CCA PN 3D56076G01, G02. The tuning procedure must be performed before the UUT is retested to verify that the repair has been successfully accomplished. General tuning instructions and foil installation are given in paragraphs 1.8.1 through 1.8.1.3.3. Specific tuning instructions are given in paragraphs 4.8.2.2 through 4.8.2.2.2.

4.8.2.1 Testing.- The fault isolation software is designed to identify the faulty component whenever a UUT performance test fails. Once a failure has been detected, the test program determines the tests to be run in order to gain additional data necessary to isolate to a specific component or fault ambiguity group. The tests may be selected from either the diagnostic tests or the performance tests. The operator may be prompted to remove the UUT cover, attach an extender board and probe specified points. Once the fault has been isolated, a diagnostic message specifying the failed component or fault ambiguity group is displayed to the operator. If an ambiguity group is specified, the operator is responsible for isolating to the failed component.

4.8.2.2 Tuning.- There are two parts to the UUT tuning. The first part is a circuit check to verify that it is safe to place the UUT on the PAM test set. The second part is the actually tuning of the UUT.

4.8.2.2.1 Circuit Checks.- The outputs of transistors Q1 through Q5 must be checked for shorts to ground. If a short exists, determine the cause and make the repair. When the UUT is mounted on test fixture AD421410G01, check the integrity of the spring fingers on the test fixture for excessive wear or damage and replace any, if necessary. Minimize the gap between the output of the UUT and the input to the 4:1 combiner. Verify that the input and output RF interface tracks are centered at the spring finger transitions. Check for continuity from the input and output spring finger connections to the test fixture input and output interfaces. If an open exists, determine the cause and make the repair.

4.8.2.2.1.1 Measurements/Tuning.- The following paragraphs outline the tuning of the UUT. The shield of the 4:1 combiner must be down to perform the tuning.

4.8.2.2.1.1.1 Return Loss (S11).- The input drive to the UUT at the frequencies of 1215 MHz, 1250 MHz, 1300 MHz, 1350 MHz and 1400 MHz is automatically set by a PAM test set function. The limit is 40 (±1.4) Watts and the UUT input serves as the load. Tune the UUT for input return loss at all five frequencies by probing and adjusting the stubs on the input of Q1. The tuning stubs for input transistor Q1 are labeled 1, 2, 3 and 4 in figure 4-2. The return loss for frequencies 1215 MHz, 1250 MHz and 1300 MHz is greater than or equal 7dB. The return loss for frequencies 1350 MHz and 1400 MHz is greater than or equal to 9 dB. If an adjustment must be made, cut stubs 1 or 2 to improve the input return loss at 1215 MHz and 1250 Mhz.

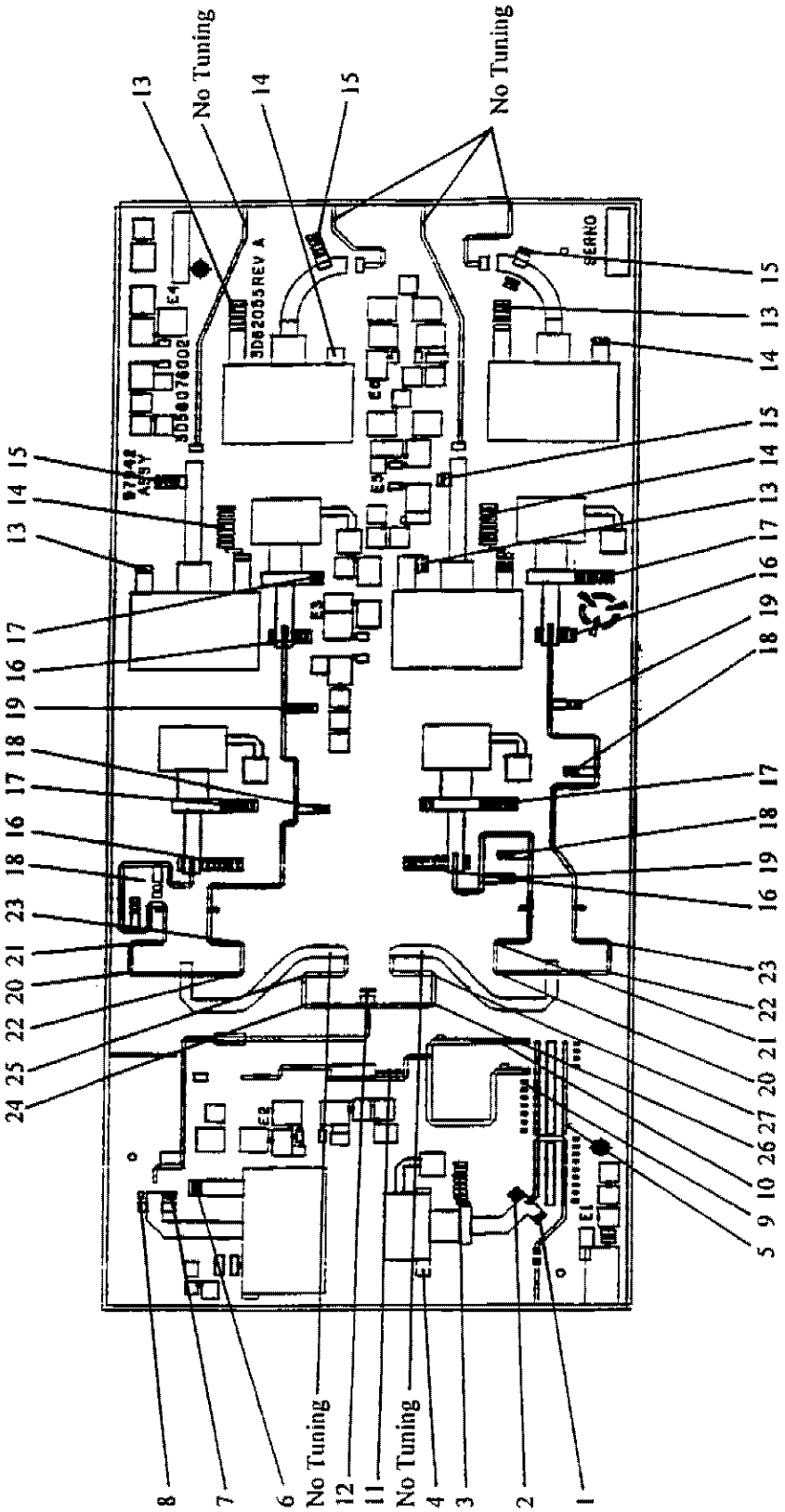

Figure 4-2. Location of Tuning Stubs and No Tuning Areas

NOTE

Monitor the current through Q1 through Q5 on the PAM test set current meter for a value between 180 mA and 295 mA. If the current is too high the fuse in series with the current meter may blow.

4.8.2.2.1.1.2 Insertion Phase (S21).- Measure the insertion phase at 1400 MHz. At this time the insertion phase is only a preliminary adjustment and is required to be within ±25 degrees of the specification nominal value of 35 (±5) degrees. Additional tuning foil used to meet other required measurement specifications may cause the insertion phase value to change.

NOTE

Before making any adjustment to the input track, verify that combined output power and the transistor current draw values are not too far out of specification. The combined output power must be within 80 Watts of the minimum specification of 900 Watts. If the combined output power is lower than this, tune for combined output power per paragraph 4.8.2.2.1.1.3.

Adjusting the input track (tuning area 5 on figure 4-2) by 0.010 inch changes the insertion phase by 1 degree. This is a linear model, so adjusting the track by 0.500 inch changes the insertion phase by 50 degrees. Each tick mark on the input track changes the insertion phase by 10 degrees. If insertion phase tuning is required, the RF input power must be reset and the input return loss must be measured again to verify that it is still within specification.

4.8.2.2.1.1.3 Combined Output Power.- Measure and monitor the combined output power and the flatness across all five frequencies. Tune the UUT in the exact order as follows until the combined output power and flatness specifications are met. Monitor the current draw to identify any transistors drawing too much current (hot) or too little current (cold). If any hot or cold transistors are detected, go to paragraph 4.8.2.2.1.1.5.2.

NOTE

The most critical element for successful tuning is setting the proper RF drive level into each of the output transistors. Once this is accomplished, minimal tuning should be required.

The RF drive into a transistor is a major factor in the amount of current a transistor draws. If the current is low, the RF drive is, most likely, low. If the current is high, the RF drive is, most likely high. At the frequencies 1215 MHz, 1250 MHz and 1300 MHz, the combined output power must

be greater than or equal to 980 Watts. At the frequencies 1350 MHz and 1400 MHz, the combined output power must be greater than or equal to 900 Watts.

****
*** WARNING ***
****

Always monitor the transistor current while tuning for combined output power, especially when tuning on the output of Q1 or the equalizer because tuning in these areas changes the RF drive level into the output transistors.

Extreme care must be exercised when adjusting the stubs on the UUT. RF drive power and dc voltage must be turned off when cuts are made or when copper tuning foil is added to prevent damage to the transistors, substrate, power supply and personnel. The operator must be careful when tuning on the input match of Q3 and Q5 or when tuning on the output match of Q2 and Q4. The input match is a dc ground and the output match has 40 volts dc on it when the power supply is turned on. These can short if the operator is not careful and is using a large tuning probe.

Set the frequency to 1400 MHz while tuning to meet the specification requirements and occasionally check across the frequency band to ensure specification compliance. The following procedure is used to tune the UUT:

1. Probe and adjust on the output of transistor Q1 to provide the proper RF drive level into the output transistors. The tuning stubs are labeled 7, 8 and 9 on figure 4-2. Tuning at stub 12 may also help.

NOTE

Continue to monitor the transistor currents for specification compliance while continuing the tuning procedure.

2. Probe and adjust the equalizer legs to increase the power at 1400 MHz without degrading the other frequencies below the specification limit. Adding length to the equalizer legs, which are labeled 9 and 10 on figure 4-2, causes the combined output power to increase at 1400 MHz. Tuning at stub 11 may also help.

4.8.2.2.1.1.4 Transistor Current Tuning.- Monitor the transistor currents for compliance with the specification. At the frequency 1215 MHz the transistor current must be less than or equal to 295 mA. At the frequency 1300 MHz the transistor current must be less than or equal to 280 mA. At the frequency 1400 MHz the transistor current must be less than or equal to 275 mA. Probe and adjust on the outputs of transistors Q2 through Q5 to optimize the performance of the individual output transistors. The output tuning stubs for transistors Q2 through Q5 are labeled 13, 14 and 15 on figure 4-2. Probe and adjust on the inputs of Q2 through Q5 to optimize the input match of the transistors to achieve the best RF drive level into the individual transistors. The input tuning stubs for transistors Q2 through Q5 are labeled 16 and 17 on figure 4-2. If the transistor currents are within specification and the UUT is not meeting the combined output power specification, there may be a transistor phasing problem. Tune the phasing stubs to bring the UUT into specification. The phasing stubs are labeled 18 and 19 on figure 4-2.

4.8.2.2.1.1.5 Tuning Check.- The tuning check makes the final check of insertion phase angle and transistor current values. Paragraphs 4.8.2.2.1.1.5.1 and 4.8.2.2.1.1.5.2 outline these tests.

4.8.2.2.1.1.5.1 Insertion Phase Angle.- Typically, the phasing of the individual transistor is not a requirement for power module CCA PN 3D56076G01, G02. Adding foil to the stubs increases the phase length and cutting the stubs decreases the phase length from each individual output transistor. The phase stubs are separated by a quarter wavelength. The quarter wavelength separated stubs must be trimmed or extended equally to preserve the input match to the transistor. For each 0.0055 inch of length for each phase stub pair there is approximately 1 degree of phase change. The following procedure is used to perform the insertion phase angle adjustment:

1. Disconnect the 40-volt inputs to transistors Q3, Q4 and Q5.
2. Measure and record the insertion phase angle for transistor Q2.
3. Measure and record the output power for transistor Q2.
4. Reconnect the 40-volt input to transistor Q2.
5. Repeat steps 1 through 4 except use Q3 as the active transistor.
6. Repeat steps 1 through 4 except use Q4 as the active transistor.
7. Repeat steps 1 through 4 except use Q5 as the active transistor.
8. Determine the largest deltas between the four transistors and adjust the phase stubs accordingly to reduce these deltas.

Reducing the deltas should increase the combined output power of the UUT. If one or more of the output transistors have low power, it may be necessary to perform further tuning on them to improve their individual output power. If further tuning does not increase the output power, replace the weak transistor(s).

4.8.2.2.1.1.5.2 Transistor Current.- The RF drive into a transistor is a major factor in the amount of current a transistor draws. If the current is low, the RF drive is usually low. Similarly, if the current is high, the RF drive is usually high. There are two ways to change the RF drive into a transistor.

First, the input match can be improved to let more RF drive into the transistor or the input match can be degraded to reflect more RF drive away from the transistor, which is the preferred approach. The input match tuning stubs are labeled 16 and 17 on figure 4-2. Usually, cutting stubs 16 and 17 increases the RF drive into a transistor. Similarly, adding foil to stubs 16 and 17 usually reflect more RF drive away from the transistor. The second method is to add tuning to the 1:2 splitter legs to direct more RF drive into a transistor and less RF drive into the adjacent transistor. The corners of the splitter legs are labeled 20, 21, 22 and 23 or 24, 25, 26 and 27 on figure 4-2. If a transistor is drawing too much current and the adjacent transistor could take an increase without causing its current to go out of specification, then tune on the 1:2 splitter legs, as needed. This approach should only be taken if the previous method fails. The following procedure adjusts the transistor current:

1. Measure the currents of Q1 through Q5. If the current is within specification, go to step 4. If the current does not meet specification, go to step 2.
2. Probe and adjust the input match of the transistors to bring the current to the specified value. If the current is within specification, go to step 4. If the current does not meet specification, go to step 3.
3. Probe and adjust the splitter legs to bring the current to the specified value. If the current is within specification, go to step 4. If the current does not meet specification, manually troubleshoot the UUT to correct the problem.
4. Verify that the combined output power and flatness of the UUT are still within specified limits. If the combined output power and flatness are still within specification, go to step 5. If the measurements are not within specified values, go to step 6.
5. Measure the insertion phase angle of the UUT at a frequency of 1400 MHz. If the insertion phase angle is within specification, go to step 6. If the insertion phase angle is not within the specified range, adjust the insertion phase angle to meet the specification using the procedure in paragraph 4.8.2.2.1.1.5.1.
6. Re-measure all of the other parameters to verify that they meet the specification requirements.

4.8.2.2.2 Tuning Location Restrictions.- It is important to note that certain restrictions apply to areas of the UUT that must not be tuned. Do not tune on the 50-ohm transmission lines after dc blocking capacitors C3 through C6 on output transistors Q2 through Q5. Do not tune on the wide transmission lines between 1:2 splitter W5 and 1:2 splitters W6 and W7. It is not necessary to tune on the 50-ohm transmission line between the output of transistor Q1 and the inputs of transistors Q2 through Q5. Power module CCA PN 3D56076G01, G02 is designed to be tuned by adjusting the tuning stubs only. Tuning in areas not designated in this tuning guide may damage the transistors.

4.9 TEST PROCEDURE.- Perform the following procedure to run the UUT test for power module CCA PN 3D56076G01, G02 on the PAMTS. The UUT test is used as a troubleshooting aid to identify suspected faults before repair is initiated. The UUT test for the power module CCA consists of the performance tests listed in Table 4-2. Table 4-2 also lists the UUT node that is checked and the expected value of the response for each test. Proceed as follows:

1. At the computer/controller workstation, initialize the Test Executive Program per paragraph 1.9.2. When instructed to select the desired UUT test in the Select Test Menu, choose the Power Amplifier option and click the Run button to initiate the test on the power module CCA.

2. Follow the on-line instructions on the computer monitor screen to perform the test.

3. When the test for the power module CCA is completed, exit the Test Executive Program per paragraph 1.9.3.

Table 4-2. Performance Tests for PN 3D56076G01, G02

Test Number	Test Name	UUT Test Node	Expected Response
0	Return Loss Test:		
	at 1215 MHz	E9	≥ 7 dB
	at 1250 MHz	E9	≥ 7 dB
	at 1300 MHz	E9	≥ 7 dB
	at 1350 MHz	E9	≥ 9 dB
	at 1400 MHz	E9	≥ 9 dB
1	BITE/Cap Test:		
	input voltage	J1-3, J1-4	+36.0 (±0.5) Vdc
	output voltage	E8	+6.1 Vdc to +7.7 Vdc
	droop	E8	≤ 0.5 Vdc
2	Output Power (with pulse integrity) Test:		
	at 1215 MHz	E10, E11, E12, E13	≥ 980 Watts peak
	at 1250 MHz	E10, E11, E12, E13	≥ 980 Watts peak
	at 1300 MHz	E10, E11, E12, E13	≥ 980 Watts peak
	at 1350 MHz	E10, E11, E12, E13	≥ 900 Watts peak
	at 1400 MHz	E10, E11, E12, E13	≥ 900 Watts peak
	pulse integrity	E10, E11, E12, E13	See figure 4-1.
3	Output Flatness Test:		
	at 1215 MHz	E10, E11, E12, E13	≤ 1 dB
	at 1300 MHz	E10, E11, E12, E13	≤ 1 dB
	at 1400 MHz	E10, E11, E12, E13	≤ 1 dB
4	Average Current Draw Test:		
	at 1215 MHz	E10, E11, E12, E13	≤ 295 mA
	at 1300 MHz	E10, E11, E12, E13	≤ 280 mA
	at 1400 MHz	E10, E11, E12, E13	≤ 275 mA

Table 4-2. Performance Tests for PN 3D56076G01, G02--Continued

Test Number	Test Name	UUT Test Node	Expected Response
5	Insertion Phase Measurement	E9	35 (±5) degrees
6	Spurious Emissions Test:		
	Wide Band	E10, E11, E12, E13	≥ 60 dB
	Narrow Band	E10, E11, E12, E13	≥ 60 dB

4.10 TROUBLESHOOTING.- There are no special troubleshooting procedures required for this UUT. If a failure occurs during the UUT performance tests, the operator can initiate on-line diagnostics to help isolate the fault. If a fault is detected, the on-line diagnostics display a conclusion which identifies the faulty circuit or active component and/or the reference designation of the active component that is the most likely cause of the failure. Refer to paragraph 1.10 for general troubleshooting information.

4.11 ASSEMBLY DRAWINGS AND PARTS LISTS.- Assembly drawings and parts lists are provided to identify and show the location of parts for the power module CCA. The assembly drawings, located in Appendix B in an 11-inch by 17-inch flat-pak format, consist of the following:

Assembly Drawing	Title
3D56076	Power amplifier module
3D57505	BITE/capacitor CCA

The assembly drawings have an associated parts list (PL). The separate PLs are located in Appendix C. The find number for each item in a PL corresponds to the callout number for the item on the associated assembly drawing.

4.12 WIRE DATA.- All wire data for the power module CCA consists of printed circuit track layouts on assembly drawings which are located in Appendix B. The wire data consists of the following:

Drawing Number	Title
3D57169	Printed Wiring Board Power Module
3D57504	Printed Wiring Board BITE/Capacitor
3D62055	Printed Wiring Board Power Module

Wiring diagrams 3D57169, 3D57504 and 3D62055 have associated PLs that are located in Appendix C.

CHAPTER 5

POWER MODULE CCA PN 3D62739G01 REPAIR

5.1 SCOPE.- This chapter contains depot maintenance repair data for power module CCA PN 3D62739G01. The repair data identifies the tools, test equipment, and consumable material needed to support repair and provides information for the disassembly, examination and cleaning, repair, component replacement, reassembly, test, and troubleshooting for the power module CCA. Assembly drawings and parts lists are provided to identify the location of components and provide parts ordering information. The ARSR-4 System reference designations for the power module CCA are too numerous to mention. Repair data is provided also for the following power module CCA subassembly:

Subassembly/CCA	Part No.
BITE/capacitor CCA A1	3D57505G01, G02

CAUTION

This unit contains electrostatic discharge (ESD) sensitive devices. Refer to DOD-STD-1686 and DOD-HDBK-263 for proper ESD precautions to use when handling this unit. Failure to use proper ESD precautions could result in damage to ESD sensitive devices.

5.2 TOOLS AND TEST EQUIPMENT.- The following tools and test equipment are required for the test and repair of the power module CCA:

PAM test set

Test fixture, power amplifier module (AD421410G01)

Cable Assy, semi-rigid (AD421965G01)

Cable Assy, semi-rigid (AD421966G01)

Phase Reference Assembly (AA421645G01)

5.3 CONSUMABLE MATERIAL.- Depending on the procedure required, the consumable materials listed in Table 5-1 or their equivalents may be required for the test and repair of the power module CCA. The Remarks column in Table 5-1 identifies the part on the assembly drawing/parts list for the power module CCA or subassembly that requires the use of consumable material. Refer to paragraph 1.8 for application procedures for consumable material.

Table 5-1. Consumable Material Required for PN 3D62739G01

Name	Part Number/ Type/Model/Spec	Manufacturer (CAGE)	Remarks
Adhesive, epoxy, silver filled	M53311EQ;	Northrop Grumman (97942)	Used to mount resistor R2
	Ablebond 84-1LMI NB-1, NSN 8040-01-339-8655	Ablestik Laboratories (21109)	(PN 1A20212H21) (find no. 5), resistors R3 and R4 (PN 1A20212H02) (find no. 6), and resistor R1 (PN 1A20212H65) (find no. 26) on assembly PN 3D62739G01
Adhesive, epoxy, thermally-conductive, dielectric	M53320TW;	Northrop Grumman (97942)	Used to mount LED mount
	Epo-Tek H74	Epoxy Technology (33246)	(PN 1A21069H01) (find no. 16) on assembly PN 3D57505G01, G02

5.4 DISASSEMBLY.- The disassembly of the power module CCA and removal of its associated subassemblies and parts are obvious; therefore no special instructions are provided. Refer to paragraph 1.7.5 for general disassembly information. For the identification and location of components in the power module CCA, refer to the assembly drawings and parts lists referenced in paragraph 5.11.

5.5 EXAMINATION AND CLEANING.- There are no special examination or cleaning procedures required for this UUT. Refer to paragraph 1.7.3 for general examination instructions, and refer to paragraph 1.7.4 for general cleaning instructions.

5.6 REPAIR AND REPLACEMENT.- Repair of the power module CCA is limited to the replacement of removable parts and the repair of obvious external defects. All repairs shall be in accordance with TO 00-25-234, General Shop Practice Requirements for the Repair, Maintenance, and Test of Electrical Equipment. Refer to paragraph 1.8 for repair and replacement procedures that require the use of a particular method or material. When a part must be replaced, select replacement parts from the parts lists referenced in paragraph 5.11. If the fault cannot be isolated and corrected through UUT assembly level testing and standard troubleshooting and repair techniques, then the CCA is condemned at the depot and discarded.

5.7 REASSEMBLY.- The reassembly of the power module CCA and replacement of its associated subassemblies and parts are obvious; therefore, no special instructions are provided. Refer to paragraph 1.7.5 for general reassembly information. For the identification and location of components in the power module CCA, refer to the assembly drawings and parts lists referenced in paragraph 5.11.

5.8 TEST DESCRIPTION.- The following paragraphs provide brief descriptions of the performance and diagnostic tests for power module CCA PN 3D62739G01. Since the descriptions are for information only, no operator intervention is required. Refer to paragraph 5.9 for the test procedure.

5.8.1 Performance Tests.- The UUT test for the power module CCA consists of the following performance tests:

Test No.	Test Name
0	Return Loss Test
1	BITE/Cap Test
2	Output Power Test
3	Output Flatness Test
4	Average Current Draw Test
5	Insertion Phase Measurement
6	Spurious Emissions Test

5.8.1.1 Test 0 - Return Loss Test.- This test checks the input return loss, which is determined by the formula:

Return Loss (dB) = -(Reflected Power - Input Power)

The reflected power at UUT terminal E9, the input to transistor Q1, is measured and the return loss is calculated.

5.8.1.1.1 Q1 Return Loss At 1215 MHz.- This test measures the reflected power at a frequency of 1215 MHz and verifies that the return loss is greater than or equal 10 dB.

5.8.1.1.2 Q1 Return Loss At 1250 MHz.- This test measures the reflected power at a frequency of 1250 MHz and verifies that the return loss is greater than or equal 10 dB.

5.8.1.1.3 Q1 Return Loss At 1300 MHz.- This test measures the reflected power at a frequency of 1300 MHz, and verifies that the return loss is greater than or equal 10 dB.

5.8.1.1.4 Q1 Return Loss At 1350 MHz.- This test measures the reflected power at a frequency of 1350 MHz and and verifies that the return loss is greater than or equal 10 dB.

5.8.1.1.5 Q1 Return Loss At 1400 MHz.- This test measures the reflected power at a frequency of 1400 MHz and verifies that the return loss is greater than or equal to 10 dB.

5.8.1.2 Test 1 - BITE/Cap Test.- This test applies a 1215-MHz, pulsed RF input signal to UUT input terminal E9. The operating voltage is adjusted to +36.0 (±0.2) Vdc and applied to UUT terminal E1. Measurements are then made to verify that capacitor bank A1 on the UUT is operating correctly.

5.8.1.2.1 BITE/Cap Input Voltage.- This test uses the digital multimeter (DMM) to measure the BITE/Cap input voltage between UUT connector J1-3 (PW*$40VSMP) and J1-4 (PW*$SMPRTN). The measured value must be +36.0 (±0.5) Vdc.

5.8.1.2.2 BITE/Cap Output Voltage.- This test uses the oscilloscope to measure the BITE/Cap output voltage at UUT terminal E8. The measured value must be in the range from +6.1 Vdc to +7.7 Vdc.

5.8.1.2.3 BITE/Cap Droop.- This test uses the oscilloscope to measure the BITE/Cap droop between UUT terminal E8 and ground. The measured value must be less than or equal to +0.5 Vdc.

5.8.1.3 Test 2 - Output Power Test.- This test combines tests of the UUT output power with a pulse integrity test. The pulse integrity test uses the input conditions of the output power test at 1400 MHz.

5.8.1.3.1 Output Power At 1215 MHz.- This test uses the power meter to measure the combined output power at a frequency of 1215 MHz and verify that the output power is greater than or equal to 900 Watts peak.

5.8.1.3.2 Output Power At 1250 MHz.- This test uses the power meter to measure the combined output power at a frequency of 1250 MHz and verify that the output power is greater than or equal to 900 Watts peak.

5.8.1.3.3 Output Power At 1300 MHz.- This test uses the power meter to measure the combined output power at a frequency of 1300 MHz and verify that the output power is greater than or equal to 900 Watts peak.

5.8.1.3.4 Output Power At 1350 MHz.- This test uses the power meter to measure the combined output power at a frequency of 1350 MHz and verify that the output power is a minimum of 850 Watts peak.

5.8.1.3.5 Output Power At 1400 MHz.- This test uses the power meter to measure the combined output power at a frequency of 1400 MHz and verify that the output power is a minimum of 850 Watts peak.

5.8.1.3.6 Pulse Integrity.- This test uses the RF detected output from the power sensor which is connected to J1 on the RF panel. Oscilloscope channel 1 is monitored and the pulse integrity of the detected output is checked to verify that there are no oscillations or discontinuities on the detected pulse. Figure 5-1 shows the criteria for failing the UUT.

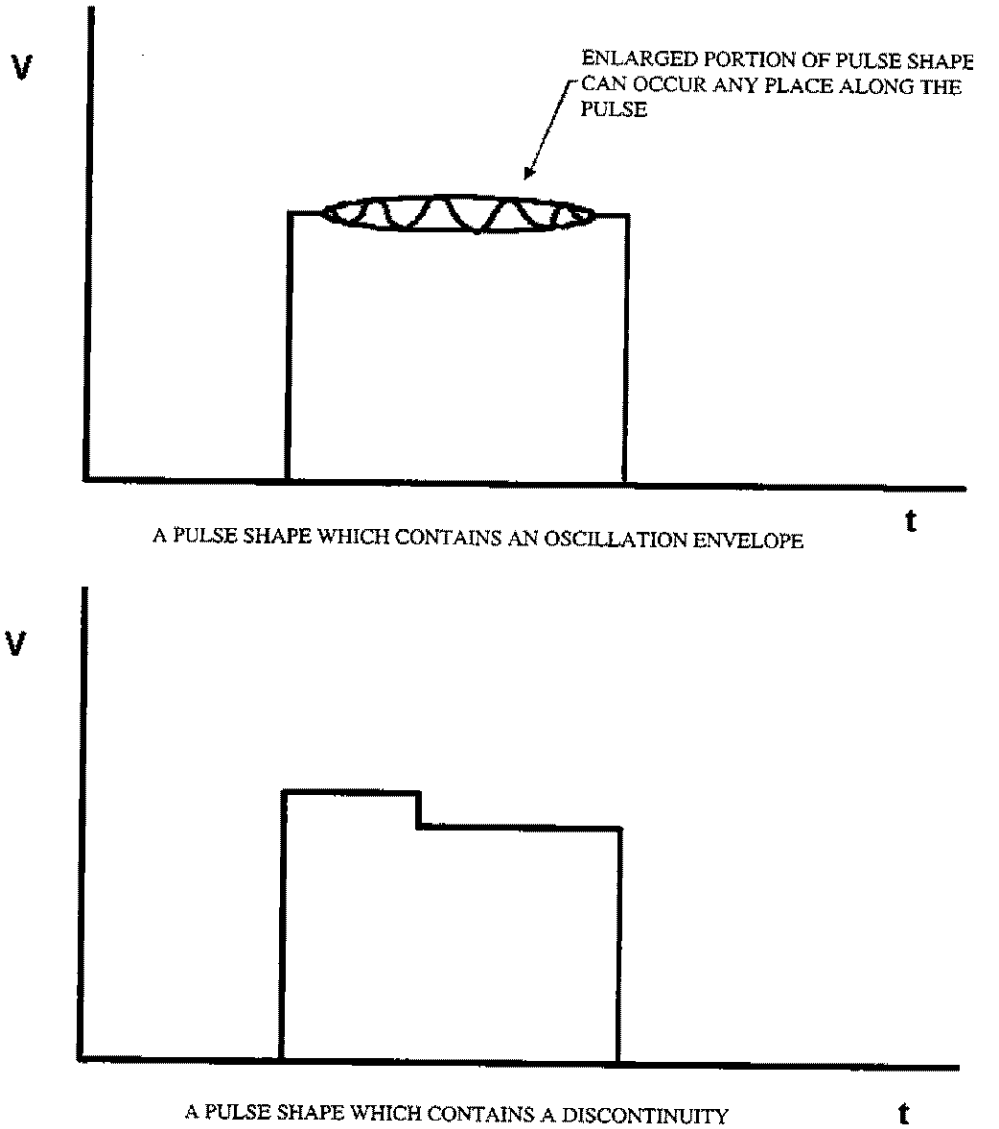

Figure 5-1. Criteria for Rejection of Pulse Integrity Test

5.8.1.4 Test 3 - Output Flatness Test.- This test verifies that the flatness of the output signal does not vary by more than 1 dB across the frequency band from 1215 MHz to 1400 MHz.

5.8.1.4.1 Output Flatness At 1215 MHz.- This test measures the combined power output signal at a frequency of 1215 MHz and verifies that the flatness is less than or equal to 1 dB.

5.8.1.4.2 Output Flatness At 1300 MHz.- This test measures the combined power output signal at a frequency of 1300 MHz and verifies that the flatness is less than or equal to 1 dB.

5.8.1.4.3 Output Flatness At 1400 MHz.- This test measures the combined power output signal at a frequency of 1400 MHz and verifies that the flatness is less than or equal to 1 dB.

5.8.1.5 Test 4 - Average Current Draw Test.- This test verifies that the average current draw for output transistors Q2 through Q5 is within specification. The average current draw for transistors Q2 through Q5 is determined by the following formula:

Average Current = Peak Current X Duty Cycle

5.8.1.5.1 Average Current Draw At 1215 MHz.- The average current draw at a carrier frequency of 1215 MHz is measured using the digital multimeter (DMM) and verified to be less than or equal to 295 mA.

5.8.1.5.2 Average Current Draw At 1300 MHz.- The average current draw at a carrier frequency of 1300 MHz is measured using the DMM and verified to be less than or equal 295 mA.

5.8.1.5.3 Average Current Draw At 1400 MHz.- The average current draw at a carrier frequency of 1400 MHz is measured using the DMM and verified to be less than or equal to 275 mA. There are no average current draw requirements at 1250 MHz and 1350 MHz.

5.8.1.6 Test 5 - Insertion Phase Measurement.- This test measures the insertion phase of the UUT at a frequency of 1400 MHz using the power meters and the six port reflectometer. A phase reference standard is connected to the PAM test set in place of the UUT and calibrated at 1400 MHz. The UUT is then connected to the PAM test set in place of the phase reference standard and the measurement is repeated. The insertion phase must be within 330 (±5) degrees of the phase reference standard with the measurement in the positive delay.

5.8.1.7 Test 6 - Spurious Emissions Test.- This test performs two checks on the output of the UUT for spurious emissions. This test is conducted over a wide frequency spectrum and over a narrow frequency spectrum.

5.8.1.7.1 Wide Band Spurious Emissions Test.- A pulsed input RF signal at a carrier frequency of 1215 MHz is applied to the UUT. Using a spectrum analyzer with the span set with a start frequency of 10 MHz and a stop frequency of 2000 MHz, the largest observed spurious emission is measured excluding the 1015 MHz to 1415 MHz band. The delta shall be greater than or equal to 60 dB.

5.8.1.7.2 Narrow Band Spurious Emmisions Test.- A pulsed input RF signal at a carrier frequency of 1215 MHz is applied to the UUT. Using a spectrum analyzer to cover the 1015 MHz to 1415 MHz band, the largest observed spurious emission is measured. Any output above -60 dBc must be less 4.0 dB above the adjacent spectral floor.

5.8.2 Diagnostic Tests.- There are two types of diagnostic tests for power module CCA PN 3D62739G01. One type of diagnostic testing is the troubleshooting that occurs when a failure is detected. This type of diagnostic test is guided by instructions provided by the PAM test set, as explained in paragraph 5.8.2.1. The second type of diagnostic is the tuning that may be necessary when components have been replaced on power module CCA PN 3D62739G01. The tuning procedure must be performed before the UUT is retested to verify that the repair has been

successfully accomplished. General tuning instructions and foil installation are given in paragraphs 1.8.1 through 1.8.1.3.3. Specific tuning instructions are given in paragraphs 5.8.2.2 through 5.8.2.2.2.

5.8.2.1 Testing.- The fault isolation software is designed to identify the faulty component whenever a UUT performance test fails. Once a failure has been detected, the test program determines the tests to be run in order to gain additional data necessary to isolate to a specific component or fault ambiguity group. The tests may be selected from either the diagnostic tests or the performance tests. The operator may be prompted to remove the UUT cover, attach an extender board and probe specified points. Once the fault has been isolated, a diagnostic message specifying the failed component or fault ambiguity group is displayed to the operator. If an ambiguity group is specified, the operator is responsible for isolating to the failed component.

5.8.2.2 Tuning.- There are two parts to the UUT tuning. The first part is a circuit check to verify that it is safe to place the UUT on the PAM test set following repair. The second part is the actual tuning of the UUT.

5.8.2.2.1 Circuit Checks.- The outputs of transistors Q1 through Q5 must be checked for shorts to ground. If a short exists, determine the cause and make the repair. When the UUT is mounted on test fixture AD421410G01, minimize the gap between the output of the UUT and the input to the 4:1 combiner. Verify that the input and output interface tracks are centered at the spring finger transitions. Check for continuity from the input and output spring finger connections to the test fixture input and output interfaces. If an open exists, determine the cause and make the repair.

5.8.2.2.1.1 Measurements/Tuning.- The following paragraphs outline the tuning of the UUT. The shield of the 4:1 combiner must be down to perform the tuning.

5.8.2.2.1.1.1 Input Return Loss Tuning.- The input drive to the UUT at the frequencies of 1215 MHz, 1250 MHz, 1300 MHz, 1350 MHz and 1400 MHz is automatically set by a PAM test function. The limit on the input drive is 40 (±1) Watts and the UUT serves as the load. Tune the UUT for input return loss at all five frequencies by probing and adjusting the stubs on the input of Q1. The input tuning stubs for input transistor Q1 are labeled 1, 2, and 3 in figure 5-2. The return loss for all five frequencies is greater than or equal to 10 dB. To ensure that the UUT will meet the 10-dB specification, tune the input return loss to achieve a value of 15 dB or greater.

NOTE

Monitor the current through transistors Q1 through Q5 for a value between 180 mA and 295 mA.

5.8.2.2.1.1.2 Setting Drive to the Four Output Transistors.- Measure and monitor the combined output power and the flatness across all five frequencies. Tune the UUT in the exact order as follows until the combined output power and flatness specifications are met. Monitor the current to identify any transistors drawing too much current (hot) or too little current (cold). A transistor is hot if the current is greater than 290 mA. A transistor is cold if the current is less than 230 mA over the frequency range of 1215 MHz to 1350 MHz or less than 200 mA at 1400 MHz. If any hot or cold transistors are detected, go to paragraph 5.8.2.2.1.1.3.

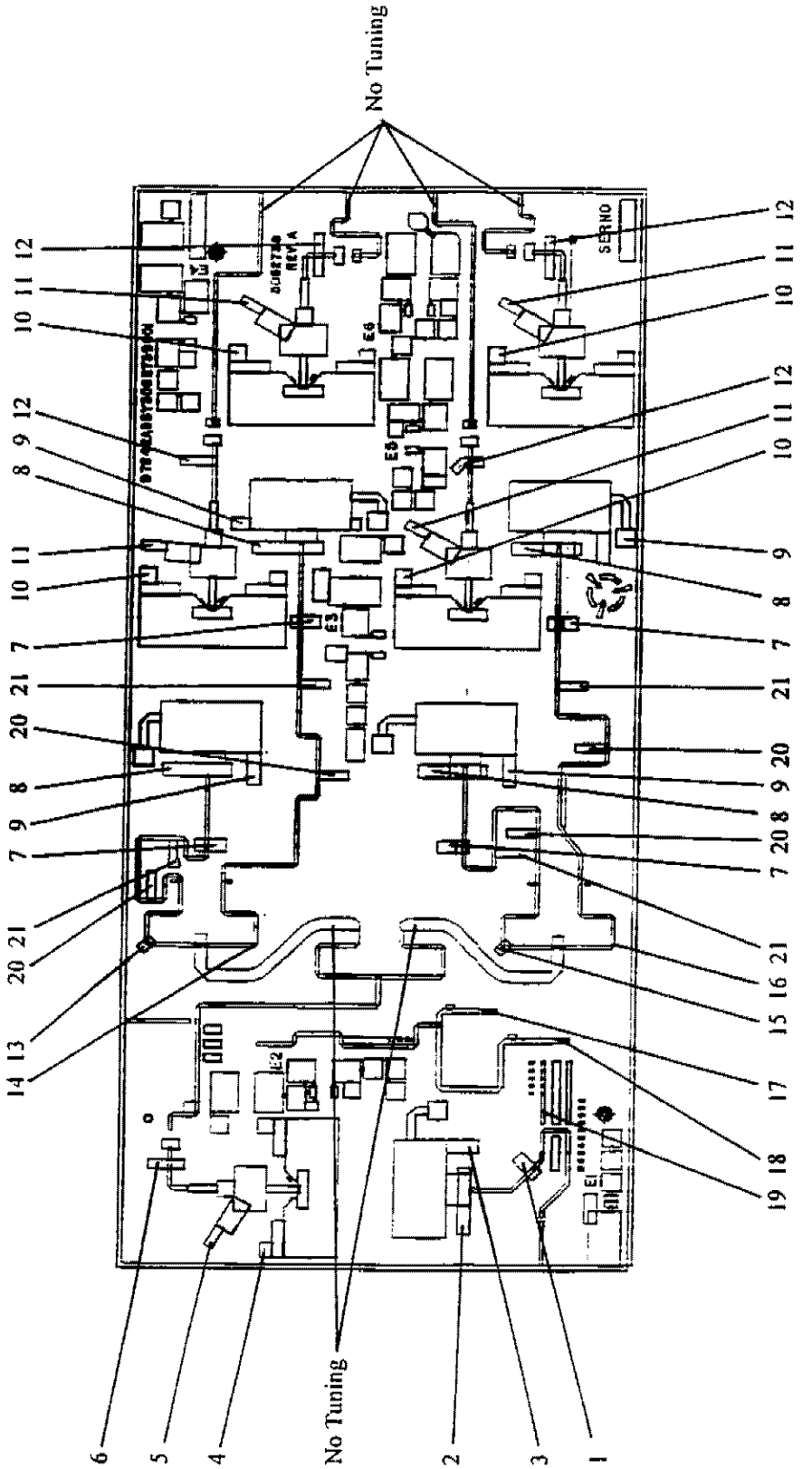

Figure 5-2. Location of Tuning Stubs and No Tuning Areas

NOTE

The most critical element for successful tuning is setting the proper RF drive level into each of the output transistors. Once this is accomplished, minimal tuning should be required.

The RF drive into a transistor is a major factor in the amount of current a transistor draws. If the current is low, the RF drive is, most likely, low. If the current is high, the RF drive is, most likely, high. At the frequencies 1215 MHz, 1250 MHz and 1300 MHz, the combined output power must be greater than or equal to 900 Watts. At the frequencies 1350 MHz and 1400 MHz, the combined output power must be greater than or equal to 850 Watts.

****
* **WARNING** *
****

Always monitor the transistor current while tuning for combined output power, especially when tuning on the output of Q1 or the equalizer because tuning in these areas changes the RF drive level into the output transistors.

Extreme care must be exercised when adjusting the stubs on the UUT. RF drive power and dc voltage must be turned off when cuts are made or when copper tuning foil is added to prevent damage to the transistors, substrate, power supply and personnel. The operator must be careful when tuning on the input match of Q3 and Q5 or when tuning on the output match of Q2 and Q4. The input match is a dc ground and the output match has 40 vdc on it when the power supply is turned on. These can short if the operator is not careful and is using a large tuning probe.

The key to tuning for drive is to increase the power at 1400 MHz without degrading the other frequencies below the specification limit. The input frequency is set to 1400 MHz while tuning to meet the specification requirements and occasionally a check is performed across the frequency band to ensure specification compliance. To tune the RF drive level into the output transistors of the UUT, probe and adjust on the output of transistor Q1. The output tuning stubs are labeled 4, 5 and 6 in figure 5-2. If the proper RF drive level can be attained, go to paragraph 5.8.2.2.1.1.4. If the proper RF drive level can not be attained, go to paragraph 5.8.2.2.1.1.3.

5.8.2.2.1.1.3 Equalizer Leg Adjustment.- Monitor the transistor currents for compliance with the specification. At an input frequency of 1215 MHz, the transistor current must be less than or equal to 295 mA. At an input frequency of 1300 MHz, the transistor current must be less than or equal to 280 mA. At an input frequency of 1400 MHz, the transistor current must be less than or equal to 275 mA. The RF drive into a transistor is a major factor in the amount of current a transistor draws. If the current is low, the RF drive is usually low. Similarly, if the current is high, the RF drive level is usually high. There are two ways to change the RF drive into a transistor. First, the input match (stubs 7, 8 and 9 in figure 5-2) can be improved to let more RF drive into a transistor or the input match can be degraded to reflect more RF drive away from the transistor. Tuning the input match to improve or degrade the RF drive is the preferred approach. If this approach fails, the second approach is to add tuning to the 1:2 splitter legs (the corners shown as 13, 14, 15 and 16 in figure 5-2) to direct more RF drive into a transistor and less RF drive into the adjacent transistor. If a transistor is drawing too much current and the adjacent transistor could take an increase without causing its current to go out of specification, then tune on the 1:2 splitter legs, as needed. To tune output transistors Q2 through Q5, perform the following procedure:

1. Probe and adjust on the outputs of transistors Q2 through Q5 to optimize the performance of the individual output transistors. The output stubs of transistors Q2 through Q5 are labeled 10, 11 and 12 in figure 5-2.
2. Probe and adjust on the inputs of transistors Q2 through Q5 to optimize the input match of the transistors to achieve the best RF drive level into the individual transistors.
3. Verify that the combined output power and output power flatness are correct across the frequency band. If the combined output power and output power flatness are correct, go to paragraph 5.8.2.2.1.1.4. If the combined output power and output power flatness are not correct, go to step 4.
4. Probe and adjust on the equalizer legs to increase the output power at 1400 MHz without degrading the other frequencies below the specification limit. Adding length to the equalizer legs (stubs 17 and 18 in figure 5-2) causes the combined output power to increase. If the combined output power and output flatness are correct, go to paragraph 5.8.2.2.1.1.5. Refer to paragraph 5.8.2.2.1.1.4 for the combined output power and output flatness specifications. If the combined output power does not exceed 870 Watts across the frequency band, go to step 5.
5. Remount capacitor C17 to its alternate configuration as shown in figure 5-3. Repeat steps 1 through 4, as necessary.

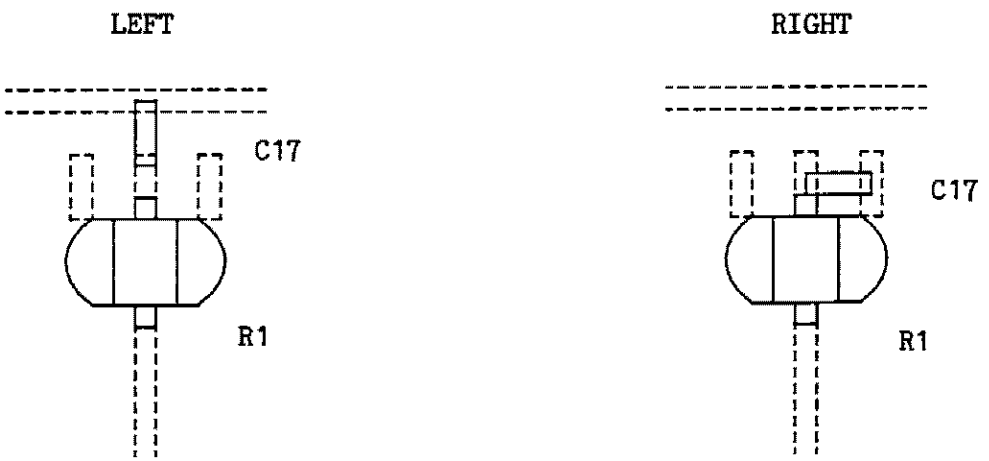

Figure 5-3. Capacitor Re-orientation

5.8.2.2.1.1.4 Output Transistor Tuning for Power and Flatness.- Adjusting the outputs of transistors Q2 through Q5 provides the final tuning of the UUT to optimize the performance of the individual output transistors. The output stubs of transistors Q2 through Q5 are labeled 10, 11 and 12 in figure 5-2. Perform the following steps to tune output transistors Q2 through Q5:

1. Probe and adjust on the outputs of Q2 through Q5 to achieve a combined power output of 900 Watts minimum over the frequency range from 1215 MHz to 1300 MHz and 850 Watts minimum over the frequency range from 1350 MHz to 1400 MHz.

2. Tune the outputs of Q2 through Q5 to achieve a maximum output flatness of 1 dB across the frequency range from 1215 MHz to 1400 MHz. If the combined output power and output flatness specifications can be met, go to paragraph 5.8.2.2.1.1.6. If the combined output power and output flatness specifications can not be met, go to paragraph 5.8.2.2.1.1.5.

5.8.2.2.1.1.5 Output Transistor Phasing Adjustment.- Typically, the phasing of the individual transistors should not be a requirement for power module CCA 3D62739G01. However, if the transistor currents are correct, but the combined output power and output power flatness specifications can not be met, there may be a transistor phasing problem. Tune on the phasing stubs to bring the UUT into specification. The phasing stubs are labeled 20 and 21 in figure 5-2. Adding foil to the stubs increases the phase length and cutting the stubs decreases the phase length from each individual output transistor. The phase stubs are separated by a quarter wavelength. Tuning must be done in pairs to preserve the input match for that transistor. In other words, the quarter wavelength separated stubs must be trimmed or extended equally. Identical tuning performed to both stubs should only cause a phase shift and not affect the input match of the transistor. For each

0.0055 inch of length for each phase stub pair, there is approximately 1 degree of phase change. The following procedure is used to perform the phasing adjustment:

1. Disconnect the 40-volt inputs to transistors Q3, Q4 and Q5.
2. Measure and record the insertion phase angle for transistor Q2.
3. Measure and record the output power for transistor Q2.
4. Reconnect the 40-volt input to transistors Q3, Q4 and Q5.
5. Repeat steps 1 through 4 except use Q3 as the active transistor.
6. Repeat steps 1 through 4 except use Q4 as the active transistor.
7. Repeat steps 1 through 4 except use Q5 as the active transistor.
8. Determine the largest deltas between the four transistors and adjust the phase stubs accordingly to reduce these deltas.

NOTE

The operator may adjust the phase by either matching the shortest transistor (by cutting the phase stub pairs) or by matching the longest transistor (by adding to the phase stub pairs). The selection depends upon the phase grouping of the four output transistors.

9. Verify that the combined output power and output power flatness are within specification. If the combined output power and output power flatness are within specification, go to paragraph 5.8.2.2.1.1.6. If the combined output power and output power flatness are not within specification, go to step 10.
10. Remount capacitor C17 to its alternate configuration as shown in figure 5-3. Repeat steps 1 through 9, as necessary.

5.8.2.2.1.1.6 Insertion Phase.- Measure the insertion phase at 1400 MHz. The insertion phase is required to be within ±5 degrees of the specification nominal value of 330 degrees. Additional tuning foil used to meet other required measurement specifications may cause the insertion phase value to change. Adjusting the input track by 0.010 inch changes the insertion phase by 1 degree. The input track is labeled 19 in figure 5-2. This is a linear model, so adjusting the track by 0.500 inch changes the insertion phase by 50 degrees. Each tick mark on the input track changes the insertion phase by 10 degrees. If insertion phase tuning is required, the RF input power must be reset and the input return loss must be re-measured to verify that it is still within specification.

5.8.2.2.2 Tuning Location Restrictions.- It is important to note that certain restrictions apply to areas of the UUT that must not be tuned. The areas in which tuning must not be performed are shown in figure 5-2. Do not tune on the 50-ohm transmission lines after dc blocking capacitors C3 through C6 on output transistors Q2 through Q5. Do not tune on the wide transmission lines between 1:2 splitter W5 and 1:2 splitters W6 and W7. It is not necessary to tune on the 50-ohm transmission line between the output of transistor Q1 and the inputs of transistors Q2 through Q5.

Power module CCA PN 3D62739G01 is designed to be tuned by adjusting the tuning stubs only. Tuning in areas not designated in this tuning guide may damage the transistors.

5.9 TEST PROCEDURE.- Perform the following procedure to run the UUT test for power module CCA PN 3D62739G01 on the PAMTS. The UUT test is used as a troubleshooting aid to identify suspected faults before repair is initiated. The UUT test for the power module CCA consists of the performance tests listed in Table 5-2. Table 5-2 also lists the UUT node that is checked and the expected value of the response for each test. Proceed as follows:

1. At the computer/controller workstation, initialize the Test Executive Program per paragraph 1.9.2. When instructed to select the desired UUT test in the Select Test Menu, choose the Power Amplifier option and click the Run button to initiate the test on the power module CCA.

2. Follow the on-line instructions on the computer monitor screen to perform the test.

3. When the test for the power module CCA is completed, exit the Test Executive Program per paragraph 1.9.3

Table 5-2. Performance Tests for PN 3D62739G01

Test Number	Test Name	UUT Test Node	Expected Response
0	Return Loss Test:		
	1215 MHz	E9	≥ 10 dB
	1250 MHz	E9	≥ 10 dB
	1300 MHz	E9	≥ 10 dB
	1350 MHz	E9	≥ 10 dB
	1400 MHz	E9	≥ 10 dB
1	BITE/Cap Test:		
	input voltage	J1-3, J1-4	+36.0 (±0.5) Vdc
	output voltage	E8	+6.1 Vdc to +7.7 Vdc
	droop	E8	≤ 0.5 Vdc
2	Output Power (with pulse integrity) Test:		
	1215 MHz	E10, E11, E12, E13	≥ 900 Watts peak
	1250 MHz	E10, E11, E12, E13	≥ 900 Watts peak
	1300 MHz	E10, E11, E12, E13	≥ 900 Watts peak
	1350 MHz	E10, E11, E12, E13	≥ 850 Watts peak
	1400 MHz	E10, E11, E12, E13	≥ 850 Watts peak
	pulse integrity	E10, E11, E12, E13	See figure 5-1.

Table 5-2. Performance Test for PN 3D62739G01--Continued

Test Number	Test Name	UUT Test Node	Expected Response
3	Output Flatness Test:		
	1215 MHz	E10, E11, E12, E13	≤ 1 dB
	1300 MHz	E10, E11, E12, E13	≤ 1 dB
	1400 MHz	E10, E11, E12, E13	≤ 1 dB
4	Average Current Draw Test:		
	at 1215 MHz	E10, E11, E12, E13	≤ 295 mA
	at 1300 MHz	E10, E11, E12, E13	≤ 295 mA
	at 1400 MHz	E10, E11, E12, E13	≤ 275 mA
5	Insertion Phase Measurement	E9	330 (±5) degrees
6	Spurious Emissions Test:		
	Wide Band	E10, E11, E12, E13	≥ 60 dB
	Narrow Band	E10, E11, E12, E13	< 4.0 dB above spectral floor

5.10 TROUBLESHOOTING.- There are no special troubleshooting procedures required for this UUT. If a failure occurs during the UUT performance tests, the operator can initiate on-line diagnostics to help isolate the fault. If a fault is detected, the on-line diagnostics display a conclusion which identifies the faulty circuit or active component and/or the reference designation of the active component that is the most likely cause of the failure. Refer to paragraph 1.10 for general troubleshooting information.

5.11 ASSEMBLY DRAWINGS AND PARTS LISTS.- Assembly drawings and parts list are provided to identify and show the location of parts for the power module CCA. The assembly drawings, located in Appendix B in an 11-inch by 17-inch flat-pak format, consist of the following:

Assembly Drawing	Title
3D62739	Power amplifier module
3D57505	BITE/capacitor CCA

The assembly drawings have an associated parts list (PL). The separate PLs are located in Appendix C. The find number for each item in the PL corresponds to the callout number for the item on the associated assembly drawing.

5.12 WIRE DATA.- All wire data for the power module CCA consists of printed circuit track layouts on assembly drawings which are located in Appendix B. The wire data consists of the following:

Drawing Number	Title
3D57504	Printed Wiring Board BITE/Capacitor
3D62738	Printed Wiring Board Power Module

Wiring diagrams 3D57504 and 3D62738 have associated PLs that are located in Appendix C.

APPENDIX A

LIST OF ACRONYMS AND ABBREVIATIONS

List of Acronyms and Abbreviations

Acronym/Abbreviation	Meaning
A	ampere
A/D	analog-to-digital
AC	alternating current
ARSR-4	Air Route Surveillance Radar-Model 4
BIT	built-in test
C	Celsius
CAGE	commercial and government entity
CCA	circuit card assembly
dB	decibel
dBc	decibel with respect to carrier
DC	direct current
DMM	digital multimeter
ESD	electrostatic discharge
Hz	Hertz
IC	integrated circuit
IF	intermediate frequency
kHz	kilohertz
LLRF	low level radio frequency
mA	milliampere
MHz	megahertz
ms	millisecond
mV	millivolt
no.	number
ns	nanosecond
NSN	national stock number
PAMTS	power amplifier module test set
PC	personal computer
PCB	printed circuit board
PL	parts list
PN	part number
PS	power supply

List of Acronyms and Abbreviations--Continued

Acronym/Abbreviation	Meaning
QTY	quantity
PWA	printed wiring assembly
PWB	printed wiring board
RL	running list
RF	radio frequency
SIG	signal list
SL	string list
us	microsecond
UUT	unit under test
VAC	volts alternating current
VDC	volts direct current

DATE:
SUBJECT:

FROM:
TO:

a. Present Problems-

b. Recommended Improvements-

Signature

FACILITY IDENTIFIER & ADDRESS