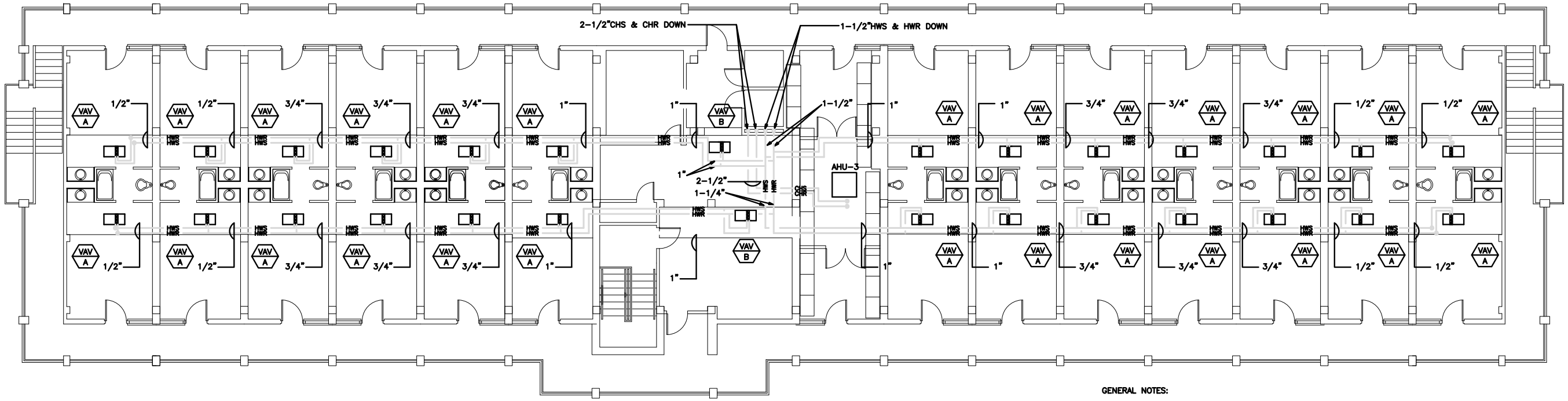

THIRD FLOOR MECHANICAL PLAN — BLDG 697

SCALE: 1/8" = 1'-0"

GENERAL NOTES:

1. ALL NEW (ONLY) CHS & CHR PIPING SHALL BE INSULATED WITH RIGID CELLULAR GLASS.
2. ALL NEW (ONLY) HWS & HWR PIPING SHALL BE INSULATED WITH FLEXIBLE MINERAL FIBER INSULATION.
3. SEE VAV BOX PIPING CONNECTION DETAIL FOR SPECIFIC SPACING AND CONNECTION REQUIREMENTS. VAV BOXES MUST BE PIPED FOR EASE OF ACCESS AND REMOVAL.

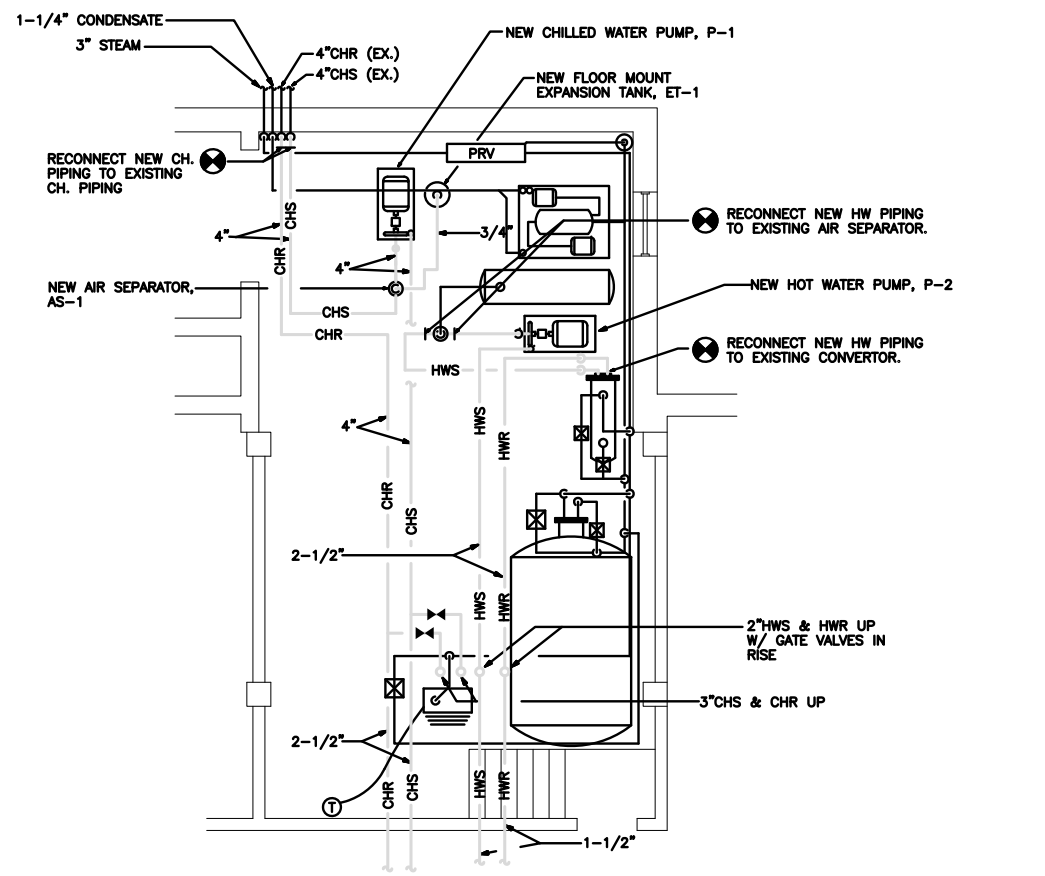

LARGE SCALE MECHANICAL ROOM PLAN

SCALE: 1/4" = 1'-0"

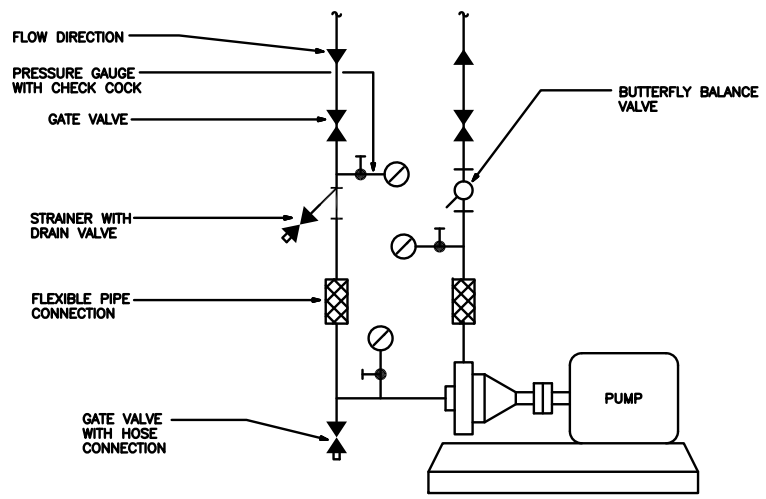

BASE MOUNTED PUMP DETAIL

NO SCALE

DATE	REVISION NO. & DESCIPTION	BY

PROJECT TITLE:
REPAIR INSUL.
BLDG. 697
MAX 90-1057A
MAXWELL AFB

PROJECT NO.: MAX 90-1057A

DRAWING TITLE:
THIRD FLOOR
PIPING PLAN

DRAWN BY:	DESIGNED BY:
TDH	CDL
DATE: 6-25-93	SCALE: AS SHOWN
REF. SHEET: M4	SHEET: 9 OF 24

DRAWING NUMBER:
MOO 697-9301

ALABAMA REGISTERED No. 16200 PROFESSIONAL ENGINEER C. DAVID LECROY

ALL DRAWINGS ARE DIAGRAMMATIC AND ARE INTENDED TO QUALIFY THE MATERIALS SPECIFIED AND INDICATE THEIR INTENDED RELATIONSHIP TO EACH OTHER. THE DRAWINGS ARE NOT TO BE SCALED, RATHER FIELD CONDITIONS SHOULD DICTATE PLACEMENT. THE VARIOUS SCALES USED ON THE DRAWINGS MAY NOT ALLOW THE INDICATIONS OF ALL FITTINGS, OFFSETS, AND ACCESSORIES THAT MAY BE REQUIRED. THE CONTRACTOR IS TO CAREFULLY INVESTIGATE THE CONDITIONS THAT WOULD AFFECT THE WORK TO BE PERFORMED AND SHALL ARRANGE SUCH WORK ACCORDINGLY.

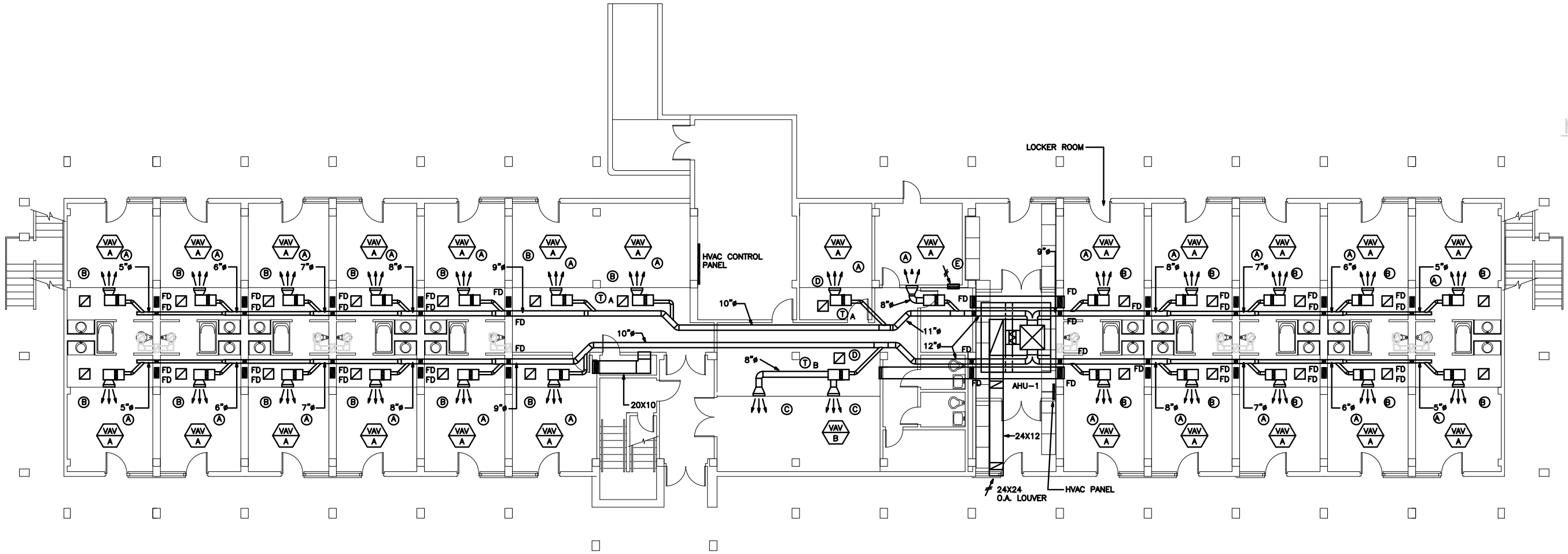

MECHANICAL LEGEND

- MANUAL VOLUME DAMPER
- RECTANGULAR DUCT
- RIGID ROUND DUCT
- CEILING DIFFUSER
- RETURN REGISTER
- RETURN GRILLE
- ø ROUND
- NK NECK
- CD CEILING DIFFUSER
- EF EXHAUST FAN
- OA OUTSIDE AIR
- RG RETURN GRILLE
- RR RETURN REGISTER
- CFM CUBIC FEET PER MINUTE
- FD FIRE DAMPER
- MVD MANUAL VOLUME DAMPER
- VAV A VARIABLE AIR VOLUME BOX
- A AIR DEVICE
- 20X10 TRANSFER DUCT SLEEVE WITH FIRE DAMPER
- SUPPLY AIR DUCT WITH FIRE DAMPER. SIZE VARIES.

MECHANICAL FIRST FLOOR PLAN BLDG 697

SCALE: 1/8" = 1'-0"

GENERAL NOTES:

1. SEE LARGE SCALE FURR-DOWN FOR GREATER DETAIL ON FURR-DOWN REQUIREMENTS.
2. SEE TOILET EXHAUST RISER FOR GREATER DETAIL ON TOILET RISERS AND EXHAUST GRILLES.

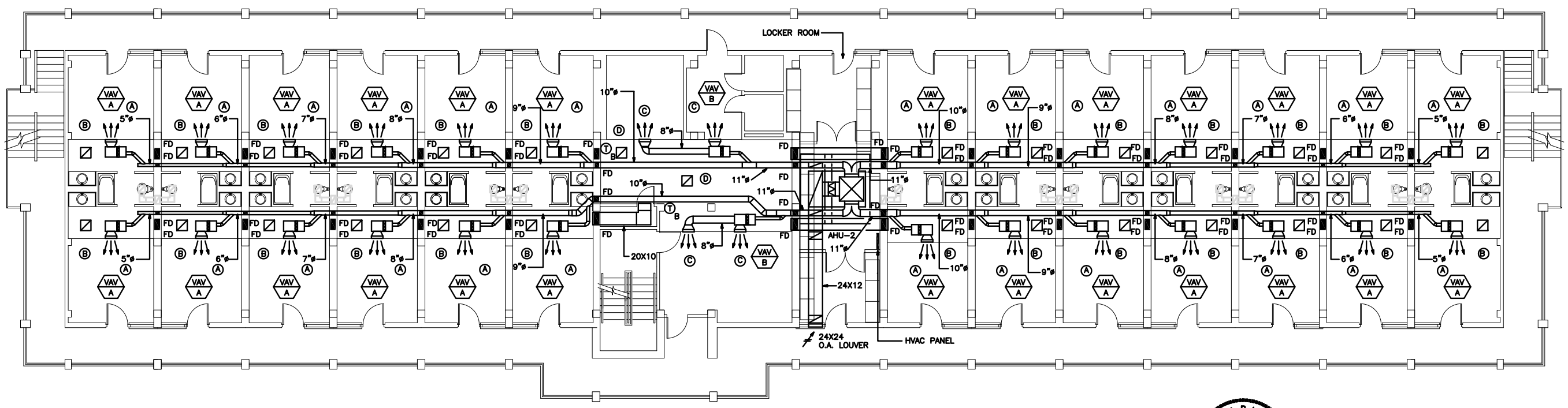

MECHANICAL SECOND FLOOR PLAN BLDG 697

SCALE: 1/8" = 1'-0"

ALABAMA REGISTERED No. 16200 PROFESSIONAL ENGINEER C. DAVID LECROY

ALL DRAWINGS ARE DIAGRAMMATIC AND ARE INTENDED TO QUALIFY THE MATERIALS SPECIFIED AND INDICATE THEIR INTENDED RELATIONSHIP TO EACH OTHER. THE DRAWINGS ARE NOT TO BE SCALED, RATHER FIELD CONDITIONS SHOULD DICTATE PLACEMENT. THE VARIOUS SCALES USED ON THE DRAWINGS MAY NOT ALLOW THE INDICATIONS OF ALL FITTINGS, OFFSETS, AND ACCESSORIES THAT MAY BE REQUIRED. THE CONTRACTOR IS TO CAREFULLY INVESTIGATE THE CONDITIONS THAT WOULD AFFECT THE WORK TO BE PERFORMED AND SHALL ARRANGE SUCH WORK ACCORDINGLY.

DATE	REVISION NO. & DESCIPTION	BY

PROJECT TITLE:
REPAIR INSUL.
BLDG. 697
MAX 90-1057A
MAXWELL AFB

PROJECT NO.: MAX 90-1057A

DRAWING TITLE:
FIRST & SECOND FLOOR MECHANICAL PLANS

DRAWN BY:	DESIGNED BY:
TDH	CDL
DATE: 6-25-93	SCALE: 1/8"=1'-0"
REF. SHEET: M5	SHEET: 10 OF 24

DRAWING NUMBER:
MOO 697-9301

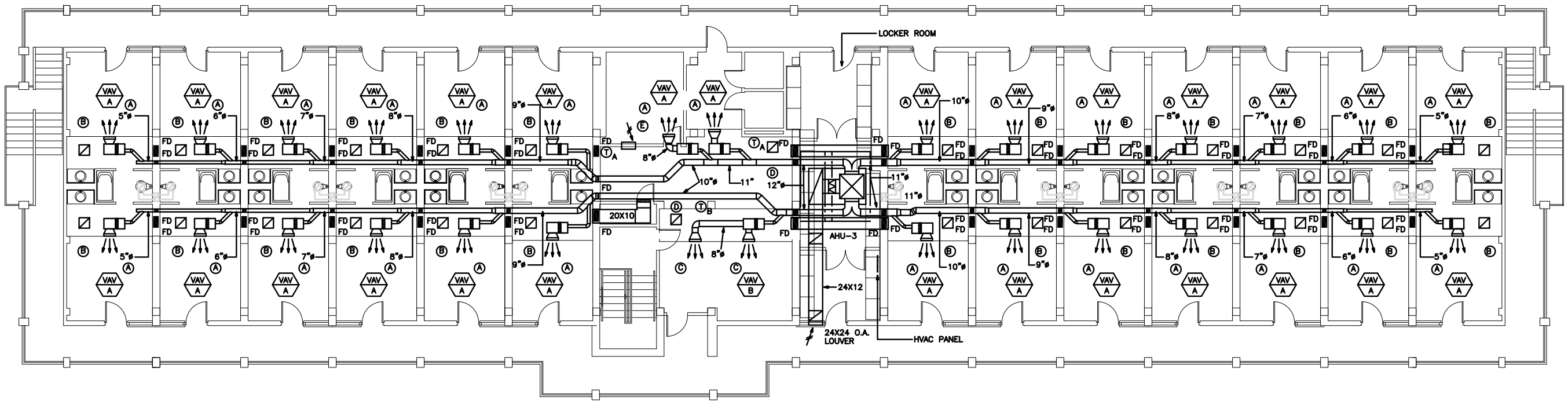

THIRD FLOOR
MECHANICAL PLAN — BLDG 697

SCALE: 1/8" = 1'-0"

GENERAL NOTES:

1. SEE LARGE SCALE FURR-DOWN FOR GREATER DETAIL ON FURR-DOWN REQUIREMENTS.
2. SEE TOILET EXHAUST RISER FOR GREATER DETAIL ON TOILET RISERS AND EXHAUST GRILLES.

DATE	REVISION NO. & DESCIPTION	BY

PROJECT TITLE:

REPAIR INSUL.
BLDG. 697
MAX 90-1057A
MAXWELL AFB

PROJECT NO.: MAX 90-1057A

DRAWING TITLE:

THIRD FLOOR
MECHANICAL PLAN

DRAWN BY:	DESIGNED BY:
TDH	CDL
DATE:	SCALE:
6-25-93	AS SHOWN
REF. SHEET:	SHEET:
M6	11 OF 24

DRAWING NUMBER:
MOO 697-9301

ALABAMA REGISTERED No. 16200 PROFESSIONAL ENGINEER C. DAVID LECROY

ALL DRAWINGS ARE DIAGRAMMATIC AND ARE INTENDED TO QUALIFY THE MATERIALS SPECIFIED AND INDICATE THEIR INTENDED RELATIONSHIP TO EACH OTHER. THE DRAWINGS ARE NOT TO BE SCALED, RATHER FIELD CONDITIONS SHOULD DICTATE PLACEMENT. THE VARIOUS SCALES USED ON THE DRAWINGS MAY NOT ALLOW THE INDICATIONS OF ALL FITTINGS, OFFSETS, AND ACCESSORIES THAT MAY BE REQUIRED. THE CONTRACTOR IS TO CAREFULLY INVESTIGATE THE CONDITIONS THAT WOULD AFFECT THE WORK TO BE PERFORMED AND SHALL ARRANGE SUCH WORK ACCORDINGLY.

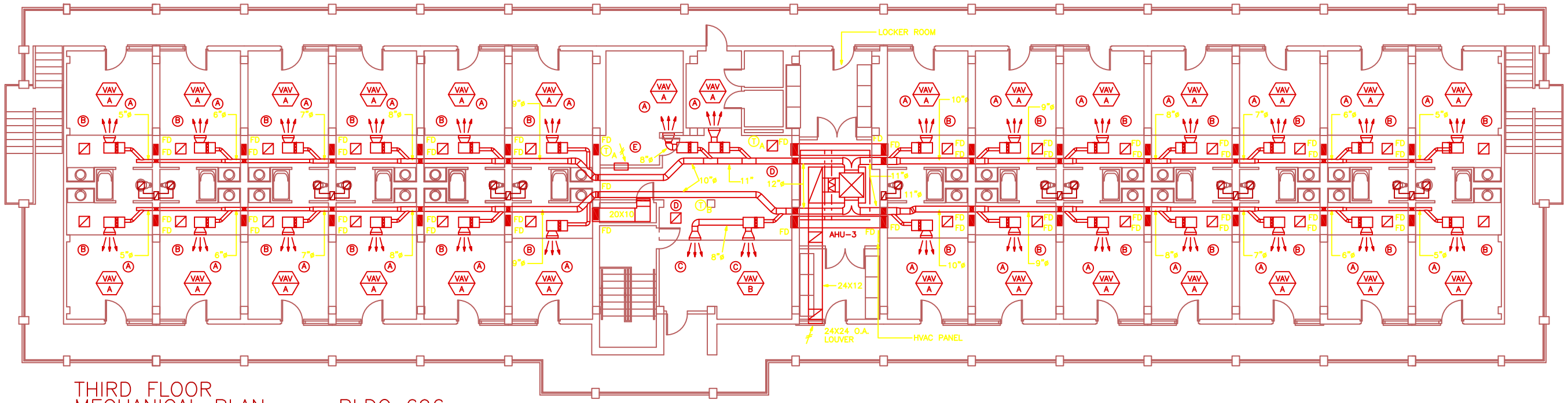

THIRD FLOOR
MECHANICAL PLAN – BLDG 696

SCALE: 1/8" = 1'-0"

GENERAL NOTES:

1. SEE LARGE SCALE FURR-DOWN FOR GREATER DETAIL ON FURR-DOWN REQUIREMENTS.
2. SEE TOILET EXHAUST RISER FOR GREATER DETAIL ON TOILET RISERS AND EXHAUST GRILLES.

ALABAMA REGISTERED No. 16200 PROFESSIONAL ENGINEER C. DAVID LECROY

ALL DRAWINGS ARE DIAGRAMMATIC AND ARE INTENDED TO QUALIFY THE MATERIALS SPECIFIED AND INDICATE THEIR INTENDED RELATIONSHIP TO EACH OTHER. THE DRAWINGS ARE NOT TO BE SCALED, RATHER FIELD CONDITIONS SHOULD DICTATE PLACEMENT. THE VARIOUS SCALES USED ON THE DRAWINGS MAY NOT ALLOW THE INDICATIONS OF ALL FITTINGS, OFFSETS, AND ACCESSORIES THAT MAY BE REQUIRED. THE CONTRACTOR IS TO CAREFULLY INVESTIGATE THE CONDITIONS THAT WOULD AFFECT THE WORK TO BE PERFORMED AND SHALL ARRANGE SUCH WORK ACCORDINGLY.

DATE	REVISION NO. & DESCIPTION	BY

PROJECT TITLE:

REPAIR INSUL.
BLDG. 696
MAX 90-1057B
MAXWELL AFB

PROJECT NO.: MAX 90-1057B

DRAWING TITLE:

THIRD FLOOR MECHANICAL PLAN AND TYPICAL FURR DOWN PLAN

DRAWN BY:	DESIGNED BY:
TDH	CDL
DATE: 6-25-93	SCALE: AS SHOWN
REF. SHEET: M6	SHEET: 11 OF 24

DRAWING NUMBER: MOO 696-9301

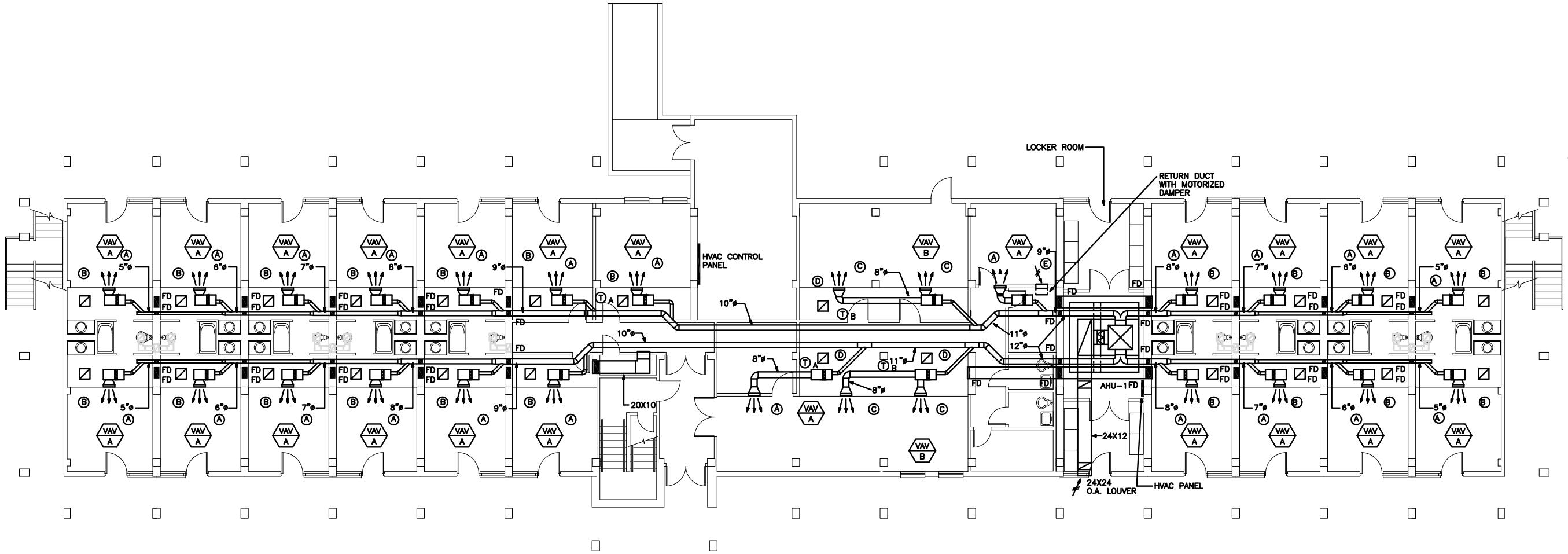

FIRST FLOOR MECHANICAL PLAN — BLDG 696

SCALE: 1/8" = 1'-0"

MECHANICAL LEGEND

- MANUAL VOLUME DAMPER
- RECTANGULAR DUCT
- RIGID ROUND DUCT
- CEILING DIFFUSER
- RETURN REGISTER
- RETURN GRILLE
- ø ROUND
- NK NECK
- CD CEILING DIFFUSER
- EF EXHAUST FAN
- OA OUTSIDE AIR
- RG RETURN GRILLE
- RR RETURN REGISTER
- CFM CUBIC FEET PER MINUTE
- FD FIRE DAMPER
- MVD MANUAL VOLUME DAMPER
- VAV A — VARIABLE AIR VOLUME BOX
- AIR DEVICE
- 20X10 TRANSFER DUCT SLEEVE WITH FIRE DAMPER
- SUPPLY AIR DUCT WITH FIRE DAMPER. SIZE VARIES.

GENERAL NOTES:

1. SEE LARGE SCALE FURR-DOWN FOR GREATER DETAIL ON FURR-DOWN REQUIREMENTS.
2. SEE TOILET EXHAUST RISER FOR GREATER DETAIL ON TOILET RISERS AND EXHAUST GRILLES.

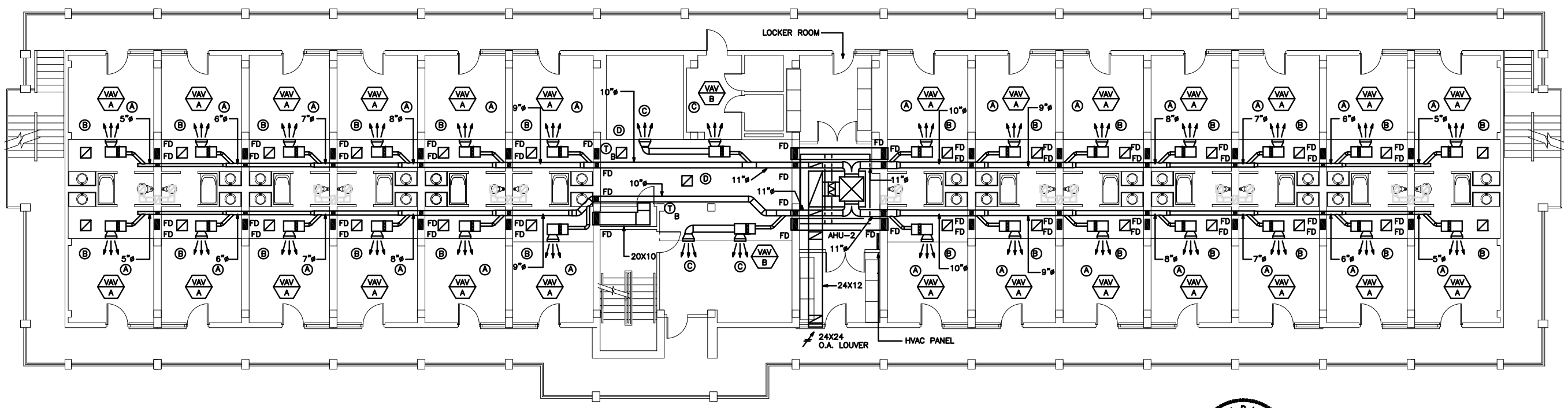

SECOND FLOOR MECHANICAL PLAN — BLDG 696

SCALE: 1/8" = 1'-0"

DATE	REVISION NO. & DESCIPTION	BY

PROJECT TITLE:
REPAIR INSUL.
BLDG. 696
MAX 90-1057B
MAXWELL AFB

PROJECT NO.: MAX 90-1057B

DRAWING TITLE:
FIRST & SECOND FLOOR MECHANICAL PLANS

DRAWN BY:	DESIGNED BY:
TDH	CDL
DATE: 6-25-93	SCALE: 1/8"=1'-0"
REF. SHEET: M5	SHEET: 10 OF 24

DRAWING NUMBER: MOO 696-9301

ALABAMA REGISTERED No. 16200 PROFESSIONAL ENGINEER C. DAVID LECROY

ALL DRAWINGS ARE DIAGRAMMATIC AND ARE INTENDED TO QUALIFY THE MATERIALS SPECIFIED AND INDICATE THEIR INTENDED RELATIONSHIP TO EACH OTHER. THE DRAWINGS ARE NOT TO BE SCALED, RATHER FIELD CONDITIONS SHOULD DICTATE PLACEMENT. THE VARIOUS SCALES USED ON THE DRAWINGS MAY NOT ALLOW THE INDICATIONS OF ALL FITTINGS, OFFSETS, AND ACCESSORIES THAT MAY BE REQUIRED. THE CONTRACTOR IS TO CAREFULLY INVESTIGATE THE CONDITIONS THAT WOULD AFFECT THE WORK TO BE PERFORMED AND SHALL ARRANGE SUCH WORK ACCORDINGLY.

11/14/2019 10:51:52 AM BREDLOW, SANDRA Y CTR USAF AETC 42 CES/CENMP
R:\Indesign\maxwell\941\PKDS 15-2645 Ph 3\Clean HVAC Sys, 941 929 1429 696 697 1410\Drawings\BASE DWGS\1410 M-3.dwg

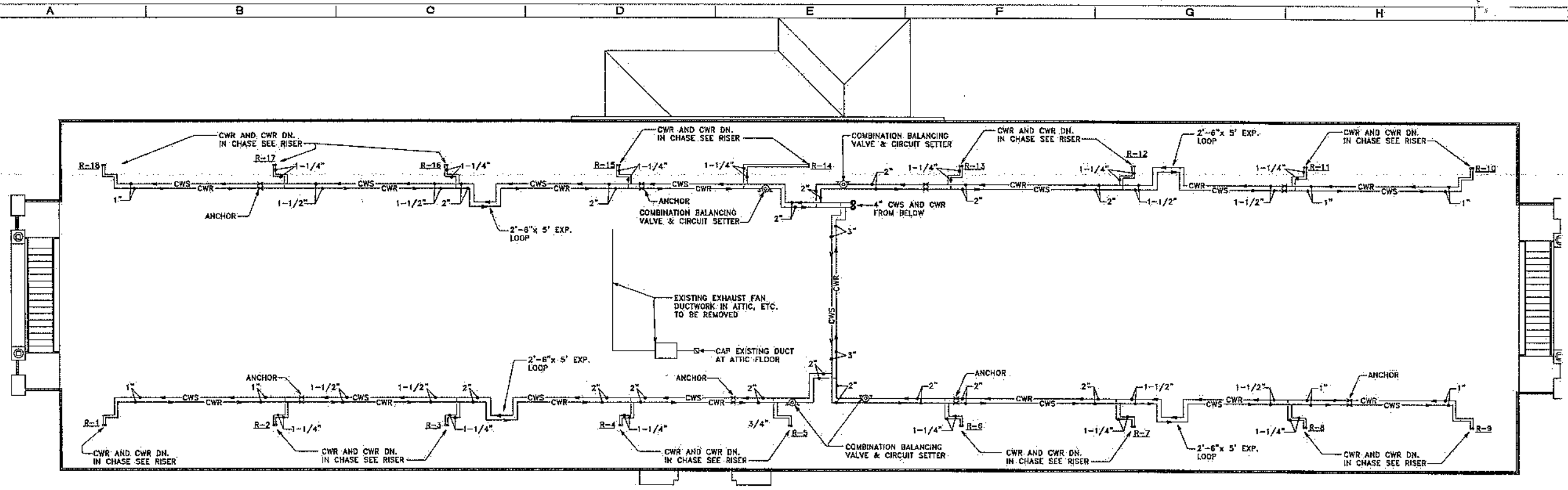

ATTIC FLOOR HVAC PLAN

SCALE: 1/8" = 1'-0"

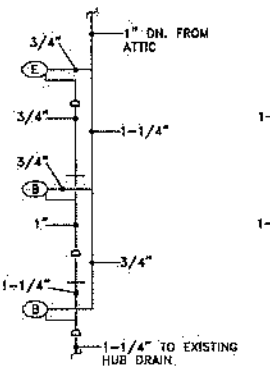

RISER R-1

NOT TO SCALE

NOTE:
RISERS R-9, R-10, AND R-18 ARE THE SAME SEE PLANS FOR LOCATIONS

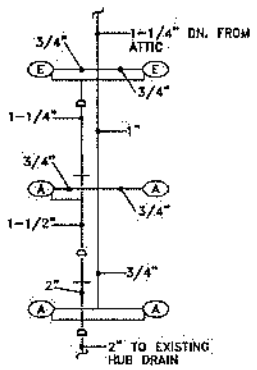

RISER R-2

NOT TO SCALE

NOTE:
RISERS R-3, R-7, R-8, R-11, R-12 R-16 AND R-17 ARE THE SAME SEE PLANS FOR LOCATIONS

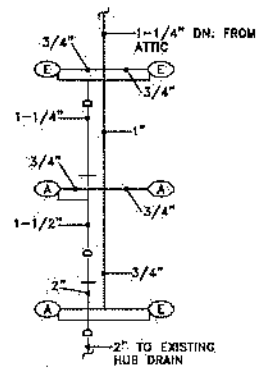

RISER R-4

NOT TO SCALE

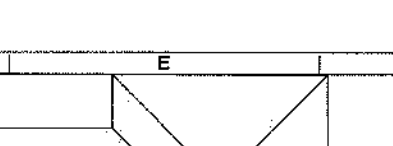

TYPICAL WATER PIPING SWING CONNECTION

NOT TO SCALE

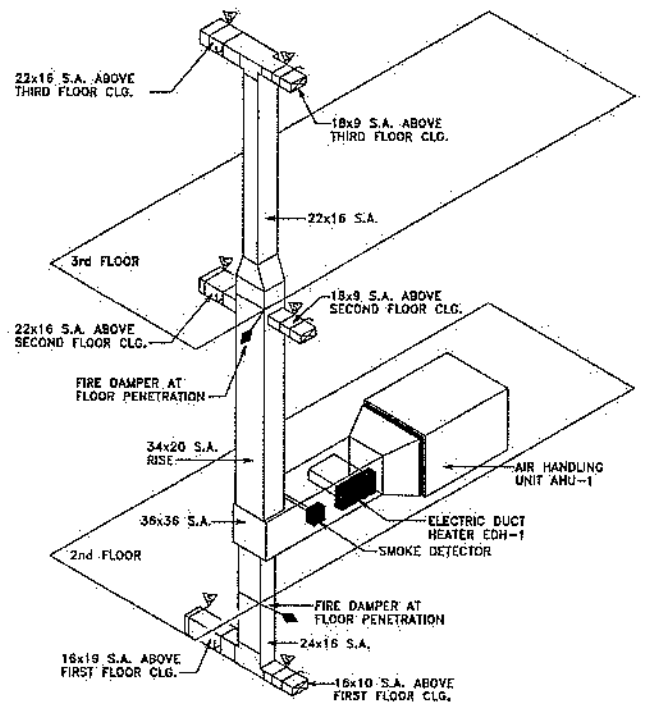

SUPPLY AIR RISER

NOT TO SCALE

NOTE:
RISER IS FOR DIAGRAMMATIC PURPOSES ONLY SEE PLANS FOR DUCT CONFIGURATION, REQUIRED DAMPER LOCATIONS, SPACE LIMITATION, ETC.

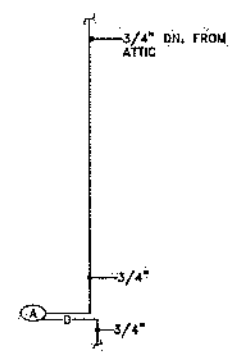

RISER R-5

NOT TO SCALE

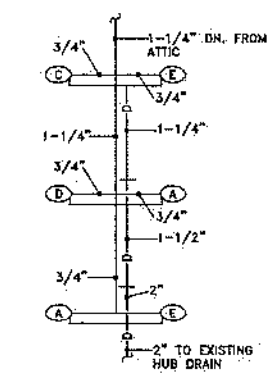

RISER R-6

NOT TO SCALE

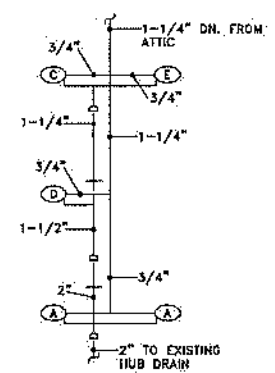

RISER R-13

NOT TO SCALE

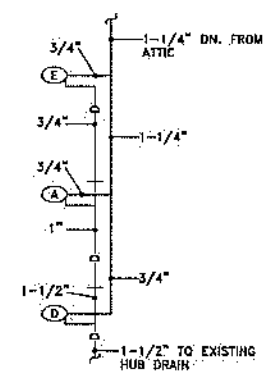

RISER R-14

NOT TO SCALE

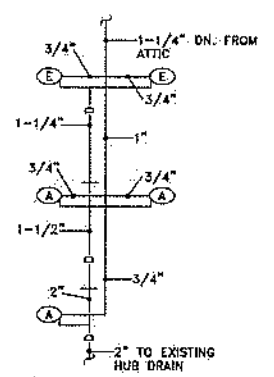

RISER R-15

NOT TO SCALE

Date: 7 NOV 2019	
Scale: 1/8" = 1'-0"	
Drawing Sheet File:	
Drawing Folder:	
Designed By:	
Drawn By: DR	
Checked By:	
Reviewed By:	

MAXWELL AIR FORCE BASE
42 CES/CEN
MAXWELL AFB, ALABAMA 36112

FNCS 15-2645

PH3 CLEAN DUCTS/SYSTEMS
BLDG 941, 929, 696, 697, 1429, 1410G
MAXWELL AFB, AL

AS BUILT
BLDG 1410, GUNTER
HVAC FLOOR PLAN

Sheet Reference Number:
M-10
SHEET 11 OF 17

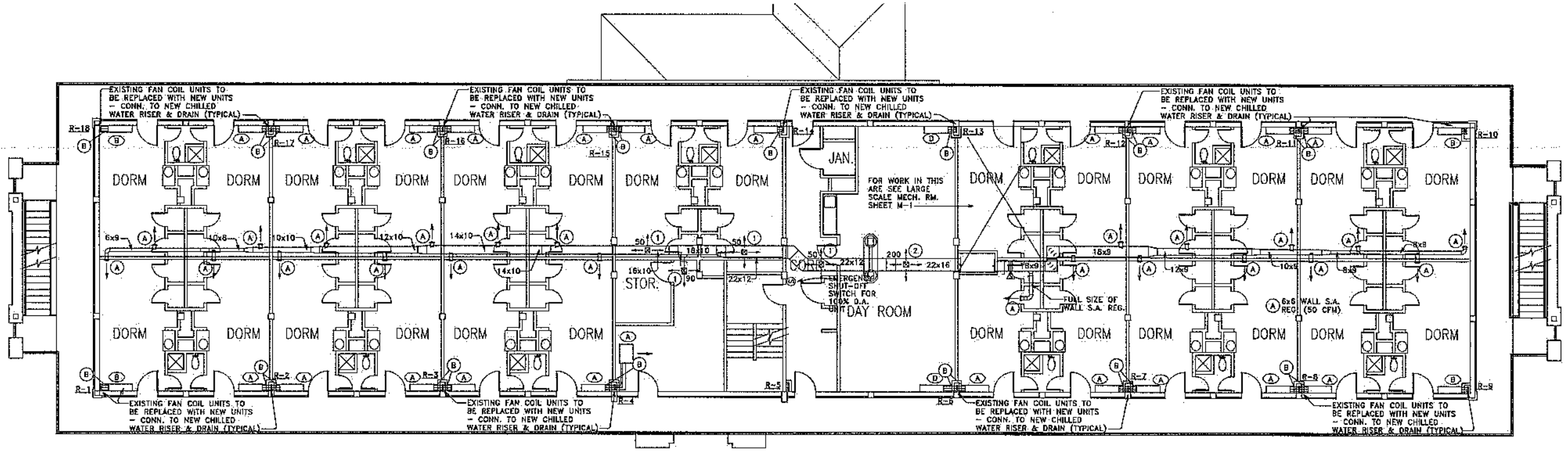

SECOND FLOOR HVAC PLAN

SCALE: 1/8" = 1'-0"

NOTE:

(A) 6x6 WALL S.A. REG. (50 CFM)

(B) PROVIDE PIPE ENCLOSURE FOR ALL RUNOUTS TO ALL FAN COIL UNITS AS REQUIRED – SEE DETAIL

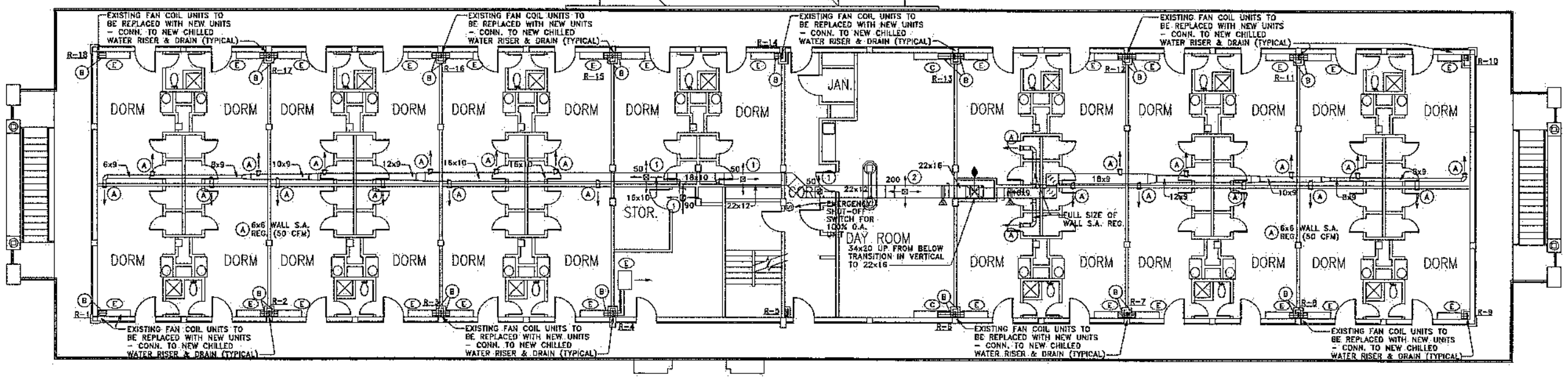

THIRD FLOOR HVAC PLAN

SCALE: 1/8" = 1'-0"

Description Revisions	Date	Approved
Symbol		

Designed By:
Drawn By: DH
Checked By:
Reviewed By:

Date: 7 NOV 2019
Scale: 1/8" = 1'-0"
Drawing Sheet File:
Drawing Folder:

MAXWELL AIR FORCE BASE
42 CES/CEN
MAXWELL AFB, ALABAMA 36112

PROS 15-2645

PH3 CLEAN DUCTS/SYSTEMS
BLDG 941, 929, 696, 697, 1428, 1410G
MAXWELL AFB, AL

AS BUILT
Bldg 1410
HVAC FLOOR PLAN

Sheet Reference Number:
M-9
SHEET 10 OF 17

R:\Indesign\maxwell\941\PROS 15-2645 Ph 3\Clean HVAC Sys, 941 929 1429 696 697 1410\Drawings\BASE DWGS\1410 M-2.dwg
11/14/2019 10:50:36 AM BREDLOW, SANDRA Y CTR USAF AETC 42 CES/CENNP

LaTarus Humphries
9/11/2018 9:08 AM
N:\2018jobs\218026\Drawings\MECH\B1484 KITCHEN UPGRADE\Sheets\MEF19006-M-105.dwg

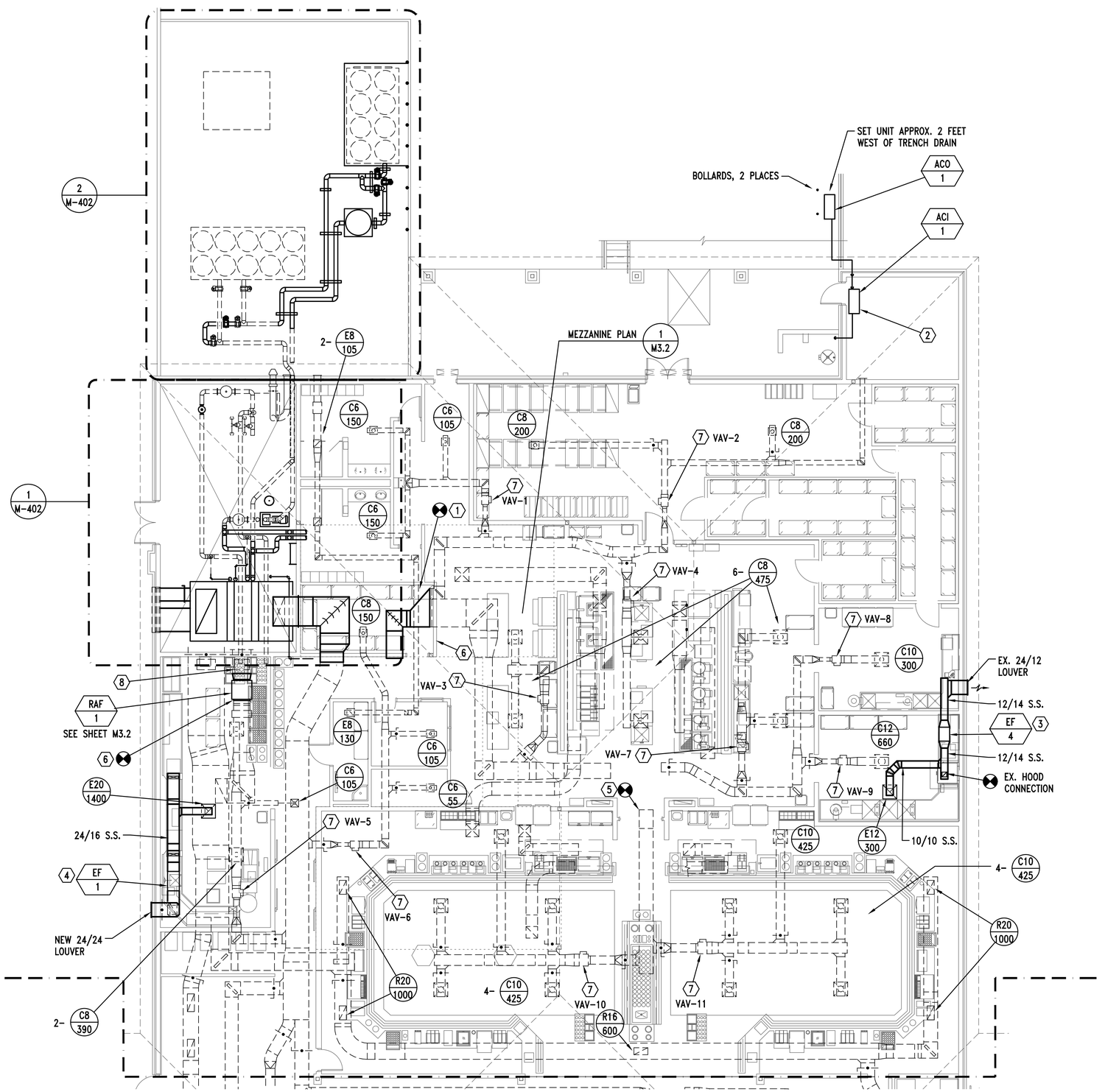

1 M-105 1/8" = 1'-0"

FLOOR PLAN – MECHANICAL – KITCHEN AREA

SCALE: 1/8" = 1'-0"
0 4' 8' 16'

SHEET NOTES

1. REMOVE AND REPLACE ALL CEILING DIFFUSERS ON THIS SHEET– SEE SHEET M101.
2. LOUVERS TO BE 4", ALUMINUM, DRAINABLE BLAZE, ALUMINUM BIRD SCREEN, ANODIZED BRONZE OR COLOR THAT MATCHES EXISTING.
3. REPLACE ALL VAV BOX CONTROLLERS, REUSE EXISTING CONTROL VALVE AND THERMOSTAT WIRING.

KEYED NOTES

(1) AHU–2 SUPPLY DUCT CONNECTED TO EXISTING SUPPLY DUCT TRANSITION TO EX. 65/18, SEE M402.

(2) ACI/ACO–1 DUCTLESS MINI–SPLIT UNIT, INSTALL ACI THIS VICINITY WITH 3/4" CONDENSATE DRAIN TO ADJACENT CAN WASH. CORE DRILL AND SEAL WALL PENETRATION. ROUTE REFRIGERANT PIPING THROUGH CORE–DRILLED AND SEALED EXTERIOR WALL PENETRATION. PROVIDE ALUMINUM JACKET ON ALL EXTERIOR REFRIGERANT PIPING. ACO–1 TO BE SET ON 4" HIGH CONCRETE HOUSEKEEPING PAD.

(3) IN–LINE EF–4 WITH NEW DUCTWORK, EXHAUST GRILLE AND CONNECTION TO CONDENSATE HOOD. DUCTWORK TO BE WELDED 304 STAINLESS STEEL, 22 GAUGE. USE EXISTING 24 X 12 LOUVER

(4) IN–LINE EF–1 WITH NEW DUCTWORK, EXHAUST GRILLE AND CONNECTION TO EXISTING DROPS TO DISHWASHER (300 CFM EACH). DUCTWORK TO BE WELDED 304 STAINLESS STEEL, 22 GAUGE. SAW–CUT EXTERIOR WALL FOR NEW 24 X 24 LOUVER.

(5) NEW AHU–1 SUPPLY BRANCH DUCT TO SERVE EXISTING VAV–10 AND VAV–11 (SERVING LINE), SEE M107.

(6) EMERGENCY VENTILATION "OFF" SWITCH, COORDINATE LOCATION WITH USER.

(7) REPLACE VAV BOX CONTROLLER, AND SPACE TEMPERATURE SENSOR.

(8) BACKDRAFT DAMPER FCD–1RL INSTALLED IN DUCTWORK AT RAF–1 DISCHARGE.

ALABAMA LICENSED No. 17702 PROFESSIONAL ENGINEER THOMAS L. HATTEMER 9/11/18

HHB Engineers, P.C.
CONSULTING ENGINEERS
PRATTVILLE, AL 334/358–2707

US Army Corps of Engineers®

MARK	DESCRIPTION	DATE
0	100% FINAL READY FOR CONSTRUCTION	9/11/18
A	100% DESIGN SUBMITTAL	8/29/18

DESIGNED BY: TLH
DRAWN BY: JKN
CHECKED BY: TLH
SUBMITTED BY: TLH
SIZE: ANSI D
ISSUE DATE: SEPT. 10, 2018
SOLICITATION NO.:
CONTRACT NO.: W91278-14-D-0029
PROJECT NUMBER: MEF19006
FILE NAME: MEF-19006-M-105.dwg

U.S. ARMY CORPS OF ENGINEERS
MOBILE DISTRICT
109 SAINT JOSEPH STREET
MOBILE, ALABAMA

BATES ENGINEERS/CONTRACTORS, INC.

MAXWELL AIR FORCE BASE, AL
OTS DINING FACILITY BUILDING 1485
HVAC AND ELECTRICAL REPAIRS
MAXWELL PROJECT # PNOS.16-7854

FLOOR PLAN - MECHANICAL - KITCHEN AREA

SHEET ID
M-105

LaTarus Humphries

9/11/2018 9:08 AM

N:\2018jobs\218026\Drawings\MECH\B1484 KITCHEN UPGRADE\Sheets\MEF19006-M-106.dwg

SHEET NOTES

1. CLEAN ALL CEILING DIFFUSERS, RETURN AND EXHAUST GRILLES ON THIS SHEET. SEE REFERENCE PLANS FOR SIZE AND TYPE.

KEYED NOTES

(1) REPLACE ALL VAV BOX CONTROLLERS AND SPACE SENSORS, REUSE EXISTING CONTROL VALVE AND THERMOSTAT WIRING.

(2) CLEAN EXISTING DIFFUSER, TYPICAL – SEE NOTE 1

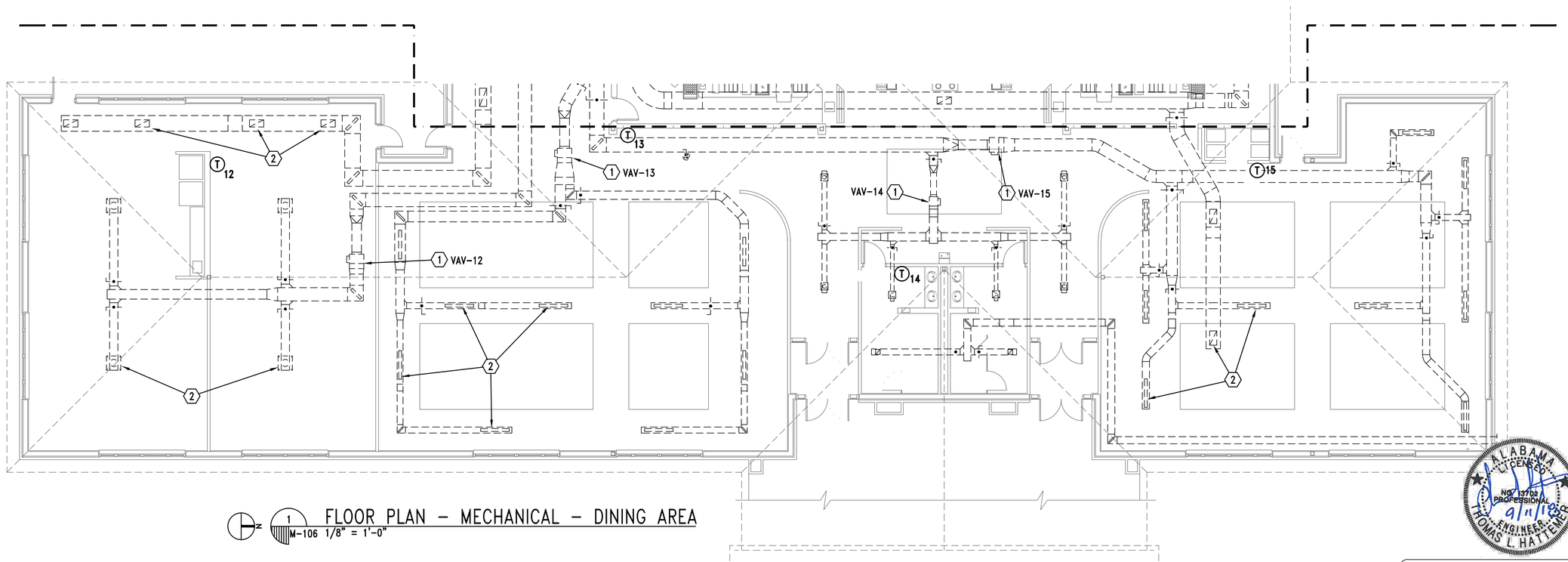

1 M-106 FLOOR PLAN – MECHANICAL – DINING AREA
1/8" = 1'-0"

SCALE: 1/8" = 1'-0"
0 4' 8' 16'

ALABAMA LICENSED NO. 13702 PROFESSIONAL ENGINEER THOMAS L. HATTEMER 9/11/18

HHB Engineers, P.C.
CONSULTING ENGINEERS
PRATTVILLE, AL 334/358-2707

US Army Corps of Engineers®

MARK	DESCRIPTION	DATE
0	100% FINAL READY FOR CONSTRUCTION	9/11/18
A	100% DESIGN SUBMITTAL	8/29/18

ISSUE DATE: SEPT. 10, 2018
SOLICITATION NO.:
CONTRACT NO.: W91278-14-D-0029
PROJECT NUMBER: MEP19006
FILE NAME: MEP19006-M-106.dwg

DESIGNED BY: TLH
DRAWN BY: JKN
CHECKED BY: TLH
SUBMITTED BY: TLH
SIZE: ANSI D

U.S. ARMY CORPS OF ENGINEERS MOBILE DISTRICT
109 SAINT JOSEPH STREET
MOBILE, ALABAMA

BATES ENGINEERS/CONTRACTORS, INC.

MAXWELL AIR FORCE BASE, AL
OTS DINING FACILITY BUILDING 1485
HVAC AND ELECTRICAL REPAIRS
MAXWELL PROJECT # PNOS 16-7854

FLOOR PLAN - MECHANICAL - DINING AREA

SHEET ID
M-106

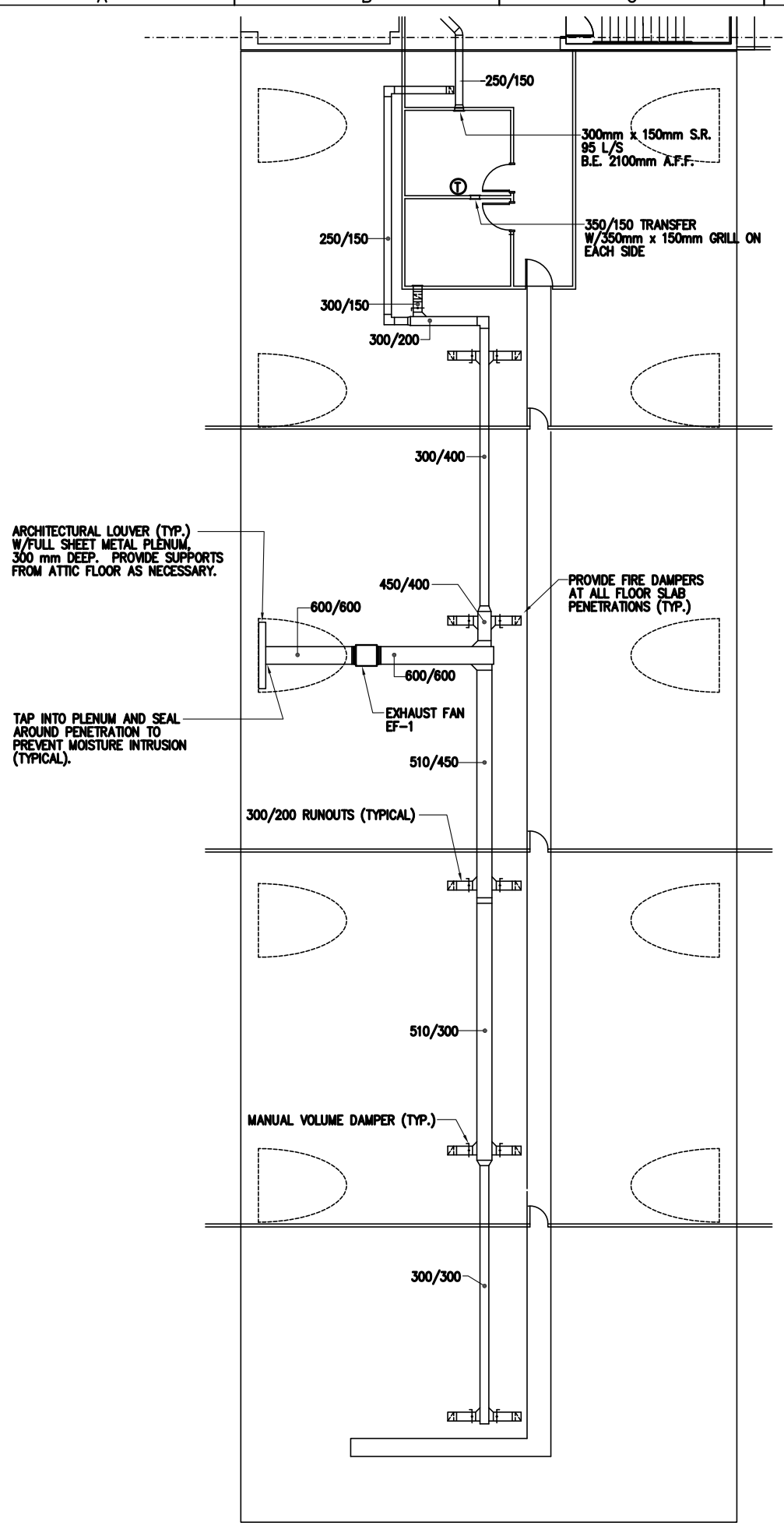

PARTIAL ATTIC HVAC PLAN

SCALE: 1 = 100

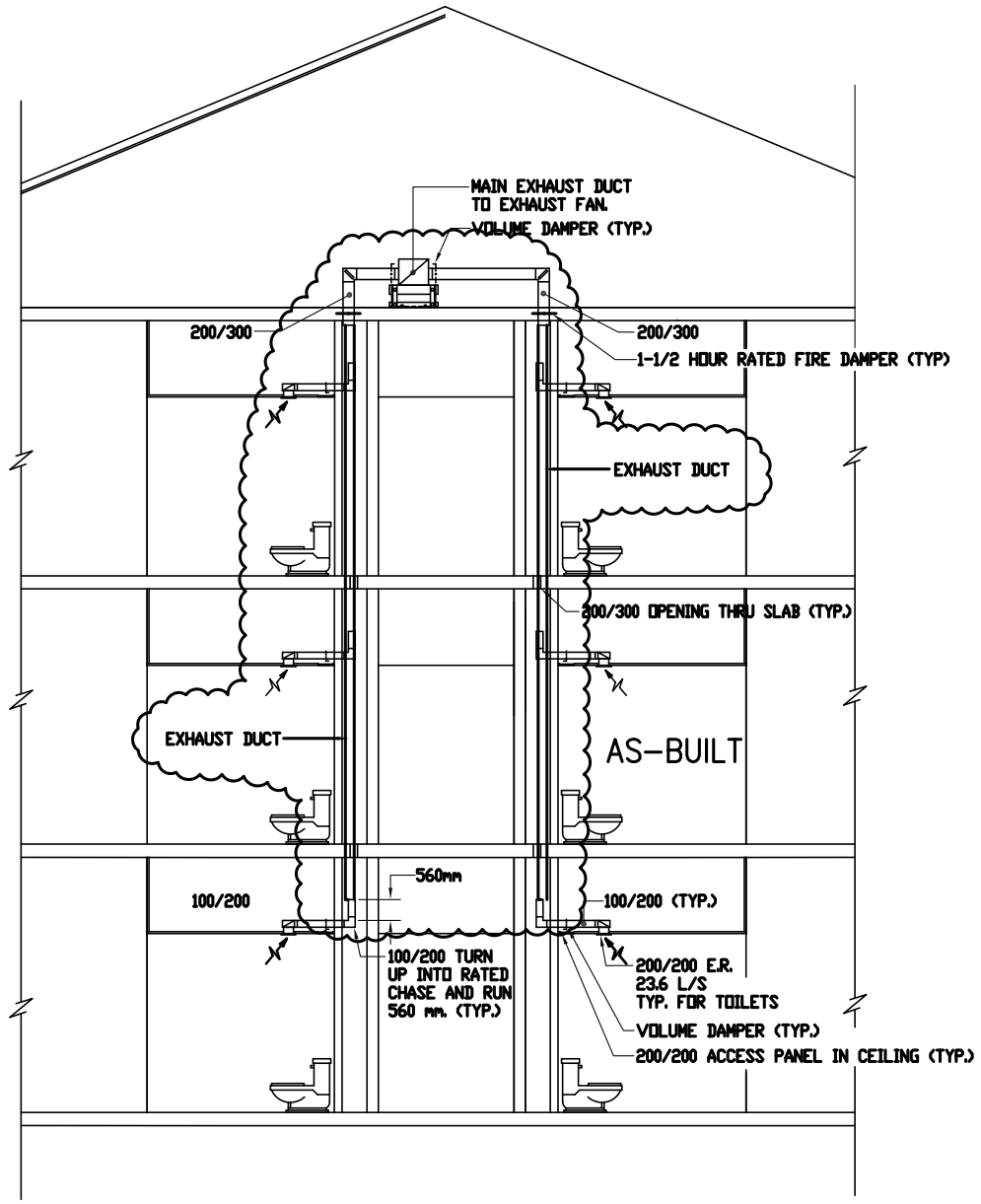

TYPICAL BATHROOM EXHAUST RISER

SCALE: 1:50

NOTE: SIZES ARE APPLICABLE TO JANITOR CLOSET RISERS, ALSO.

2000 0 2000mm

SCALE: 1 = 100

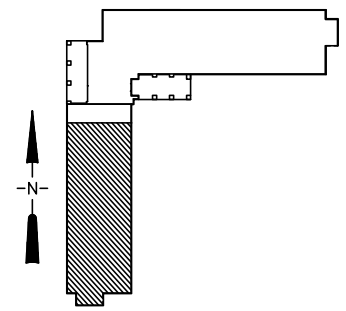

KEY PLAN

US Army Corps of Engineers
Mobile District

Symbol	Description	Date	Approved
	Description		

Designed By: W.J. KNAPP	Date: MARCH 2002		
Drawn By: W.J. KNAPP	File No. MAX-75-170		
Checked By: W.C. THAMES	I.S.O. Sheet File Name: 304M09F.DWG		
Reviewed By: W.C. THAMES	Solicitation Number: DACA01-02-R-0028		

U.S. ARMY ENGINEER DISTRICT
CORPS OF ENGINEERS
MOBILE, ALABAMA

MAXWELL AIR FORCE BASE, ALABAMA
COT STUDENT DORMITORY

PARTIAL ATTIC HVAC PLAN

Sheet Reference Number:

M-09

NOTE: FIELD LOCATE AIR FLOW MEASURUING STATION SO THAT LOCATION OF STATION AND ACCESS DOOR ARE COORDINATED WITH TRUSS LOCATIONS AND ARE ACCESSIBLE FROM ATTIC.

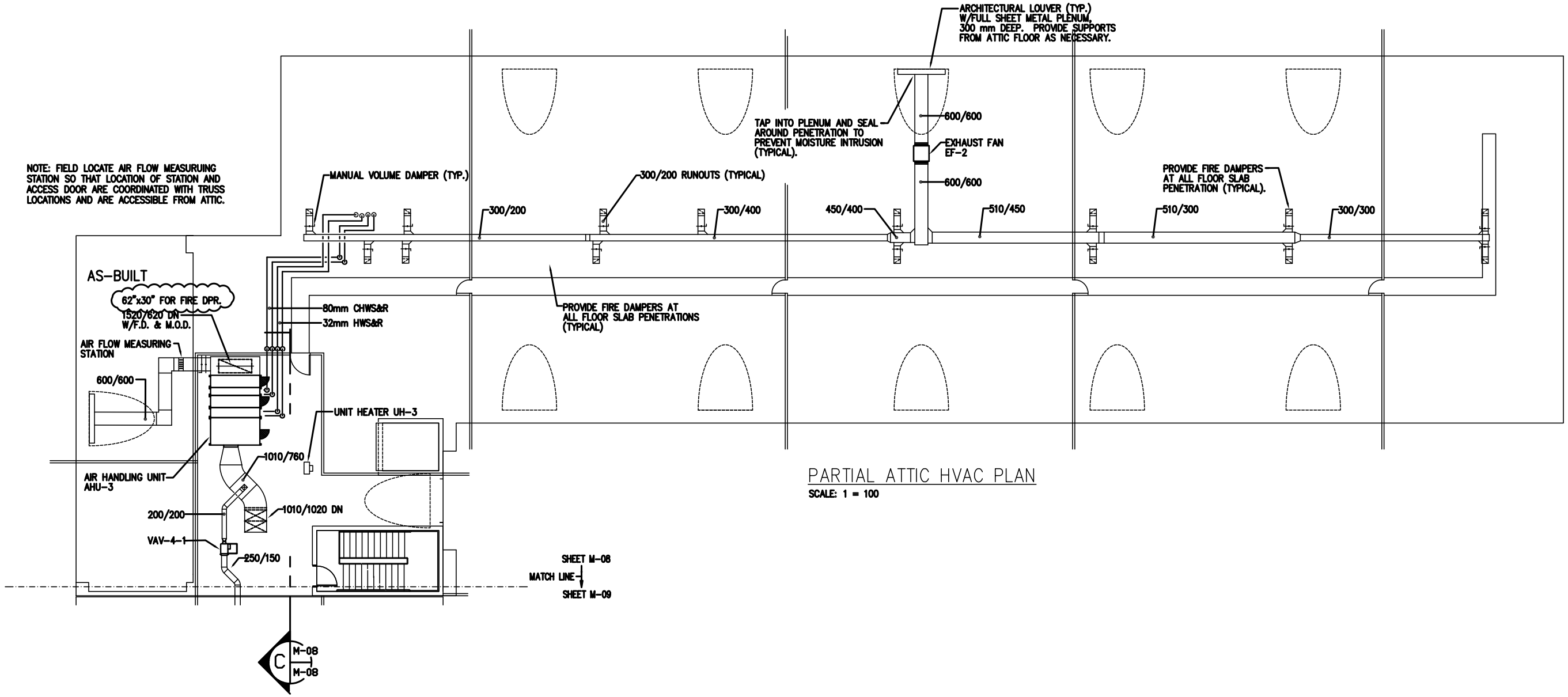

PARTIAL ATTIC HVAC PLAN

SCALE: 1 = 100

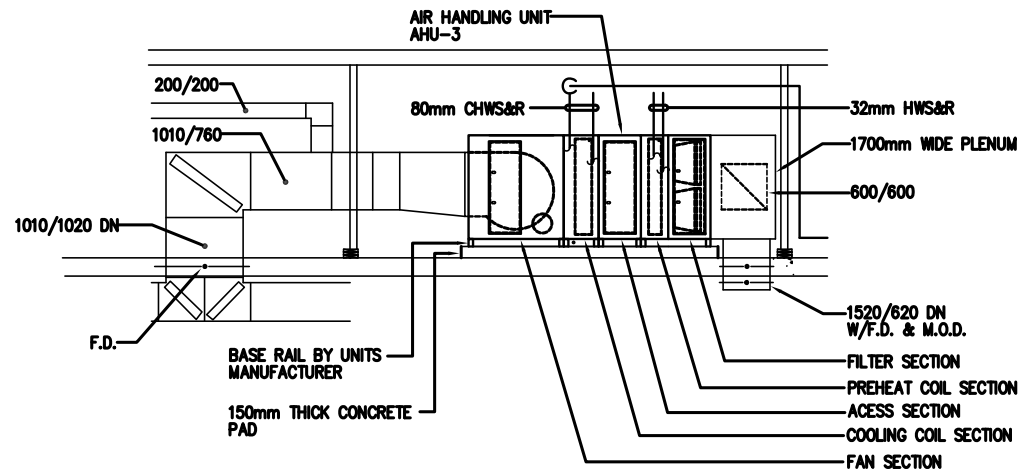

SECTION C

SCALE: 1:50

M-08 | M-08

1000 0 1000mm
SCALE: 1 = 50

2000 0 2000mm
SCALE: 1 = 100

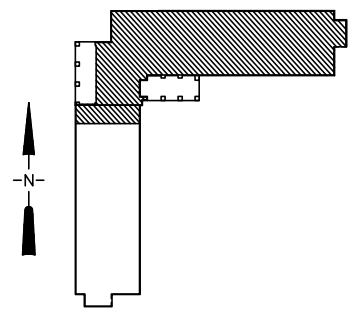

KEY PLAN

US Army Corps of Engineers
Mobile District

Symbol	Description	Date	Approved
	Description		

Designed By: W.J. KNAPP	Date: MARCH 2002		
Drawn By: W.J. KNAPP	File No.: MAX-75-169		
Checked By: W.C. THAMES	I.S.O. Sheet File Name: 3044108F.DWG		
Reviewed By: W.C. THAMES	Solicitation Number: DACA01-02-R-0028		

U.S. ARMY ENGINEER DISTRICT
CORPS OF ENGINEERS
MOBILE, ALABAMA

MAXWELL AIR FORCE BASE, ALABAMA
COT STUDENT DORMITORY

PARTIAL ATTIC HVAC PLAN

Sheet Reference Number:
M-08

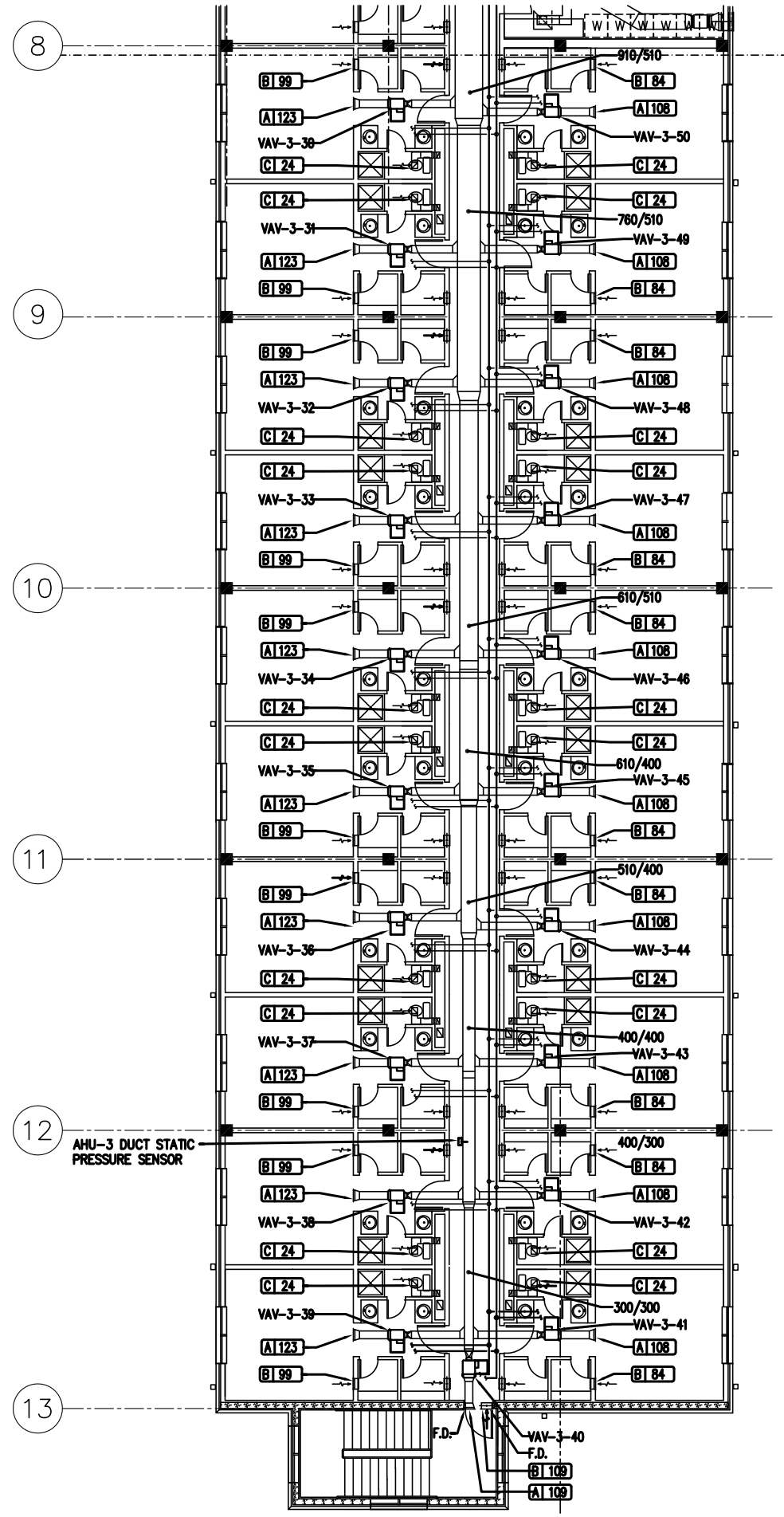

PARTIAL THIRD FLOOR HVAC PLAN

SCALE: 1 = 100

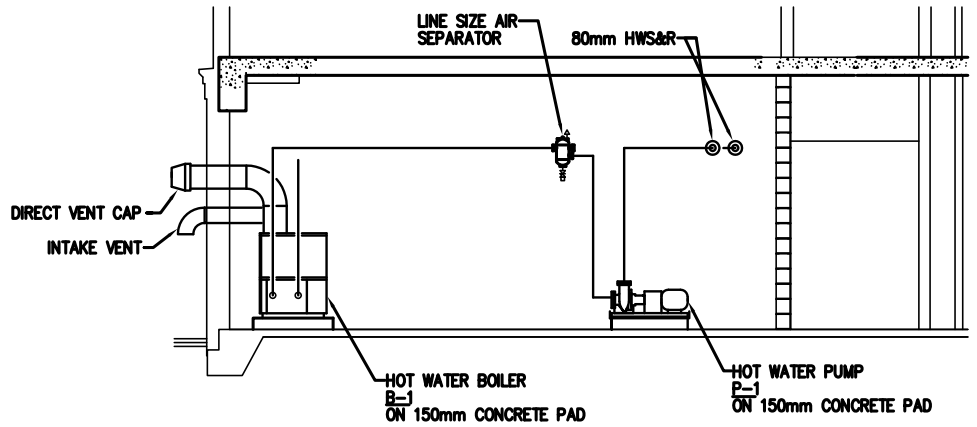

SECTION A

SCALE: 1:100

M-03 | M-07

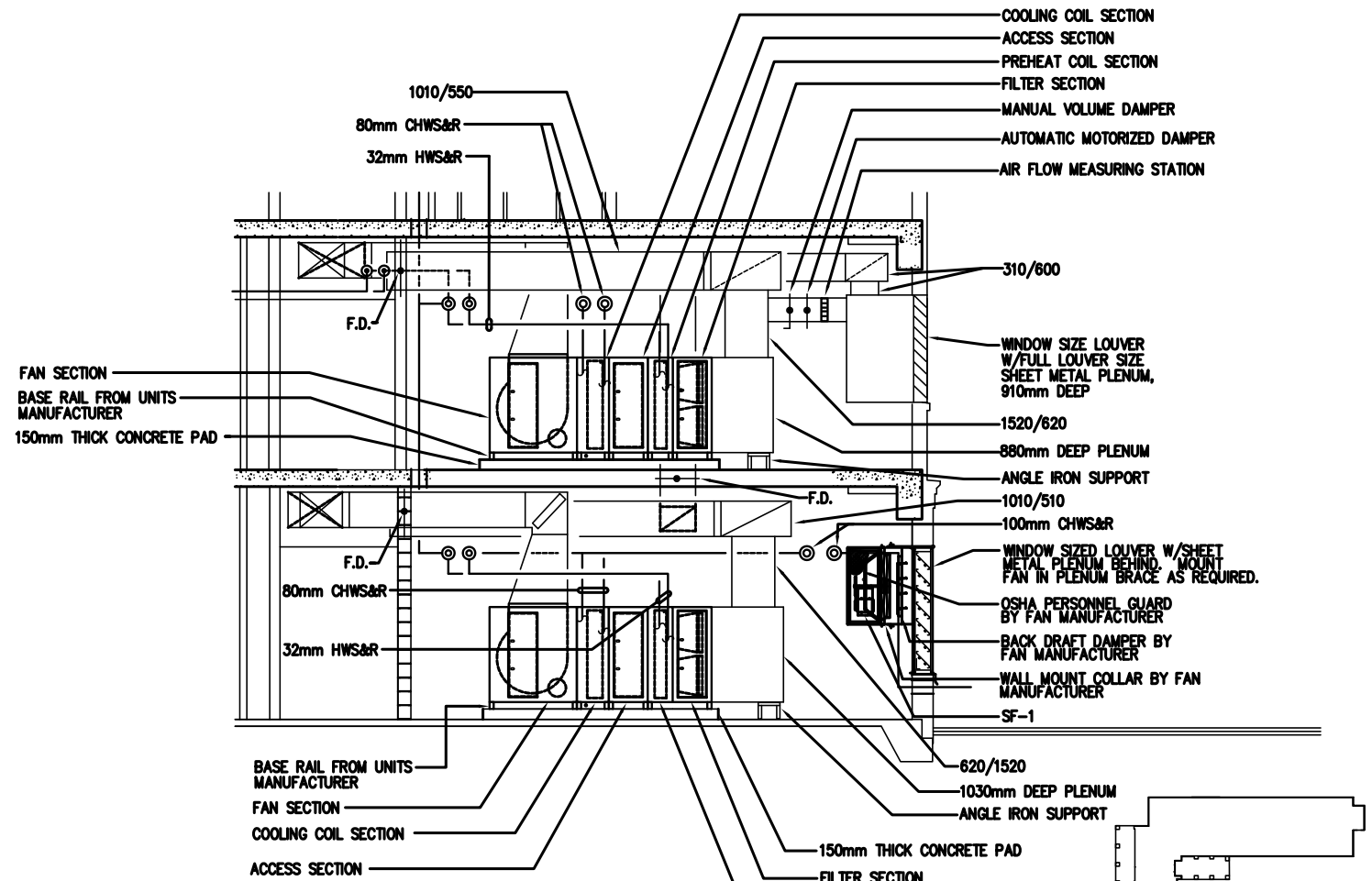

SECTION B

SCALE: 1:100

M-03 | M-04 | M-07

1000 0 1000mm

SCALE: 1 = 50

2000 0 2000mm

SCALE: 1 = 100

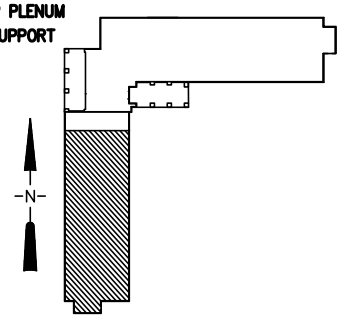

KEY PLAN

US Army Corps of Engineers
Mobile District

Symbol	Description	Date	Approved
	Description		

Designed By: W.J. KNAPP		Date: MARCH 2002	
Drawn By: W.J. KNAPP		File No.: MAX-75-168	
Checked By: W.C. THAMES		I.S.O. Sheet File Name: 304M07F.DWG	
Reviewed By: W.C. THAMES		Solicitation Number: DACA01-02-R-0028	

U.S. ARMY ENGINEER DISTRICT
CORPS OF ENGINEERS
MOBILE, ALABAMA

MAXWELL AIR FORCE BASE, ALABAMA
COT STUDENT DORMITORY

PARTIAL THIRD FLOOR HVAC PLAN

Sheet Reference Number:

M-07

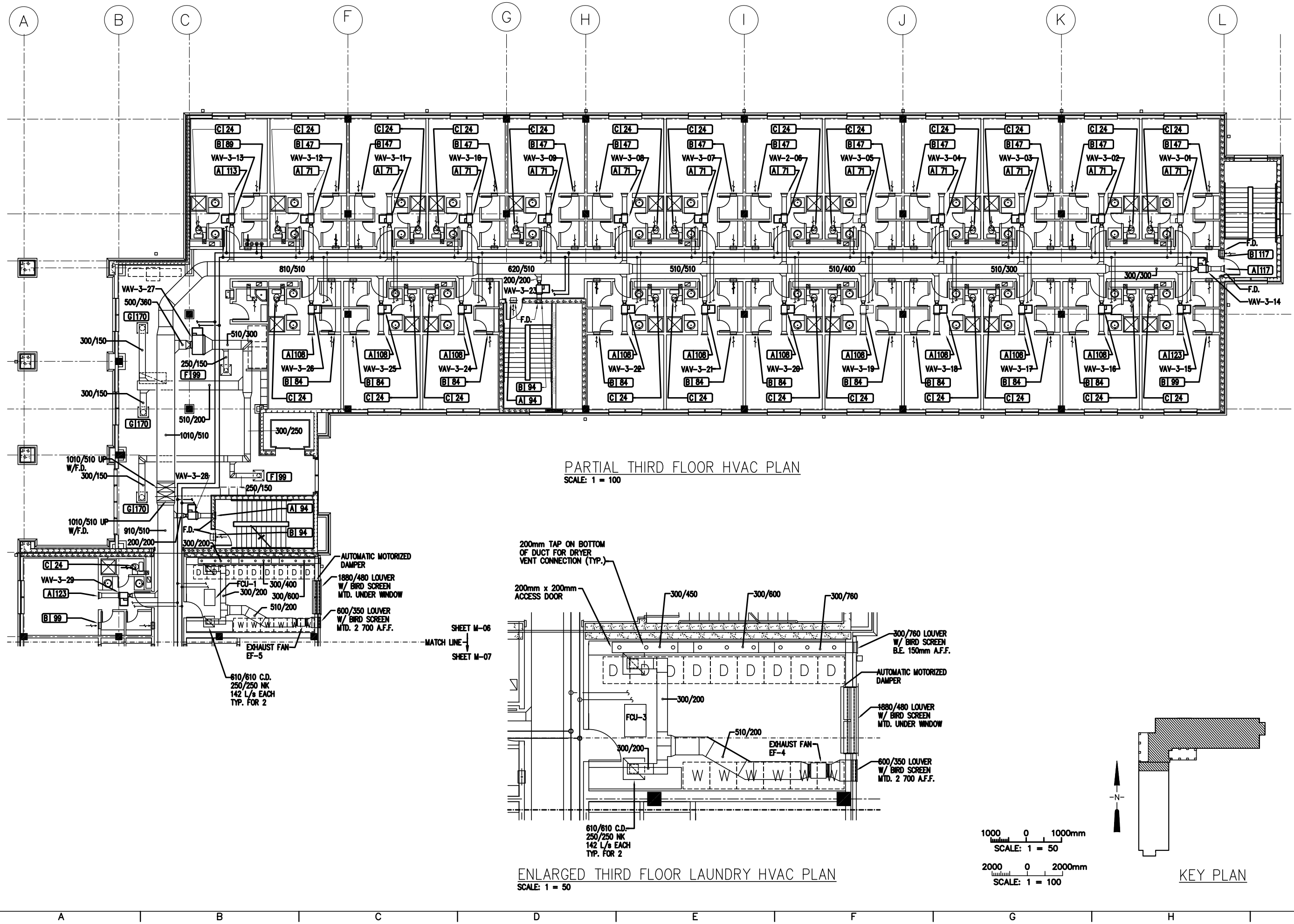

PARTIAL THIRD FLOOR HVAC PLAN

SCALE: 1 = 100

ENLARGED THIRD FLOOR LAUNDRY HVAC PLAN

SCALE: 1 = 50

1000 0 1000mm

SCALE: 1 = 50

2000 0 2000mm

SCALE: 1 = 100

KEY PLAN

US Army Corps of Engineers
Mobile District

Symbol	Description	Date	Approved
	Description		

U.S. ARMY ENGINEER DISTRICT CORPS OF ENGINEERS MOBILE, ALABAMA

Designed By: W.J. KNAPP	Date: MARCH 2002
Drawn By: W.J. KNAPP	File No.: MAX-75-167
Checked By: W.C. THAMES	I.S.G. Sheet File Name: 304M06F.DWG
Reviewed By: W.C. THAMES	Solicitation Number: DACA01-02-R-0028

MAXWELL AIR FORCE BASE, ALABAMA
CDT STUDENT DORMITORY

PARTIAL THIRD FLOOR HVAC PLAN

Sheet Reference Number:

M-06

PARTIAL SECOND FLOOR HVAC PLAN

SCALE: 1 = 100

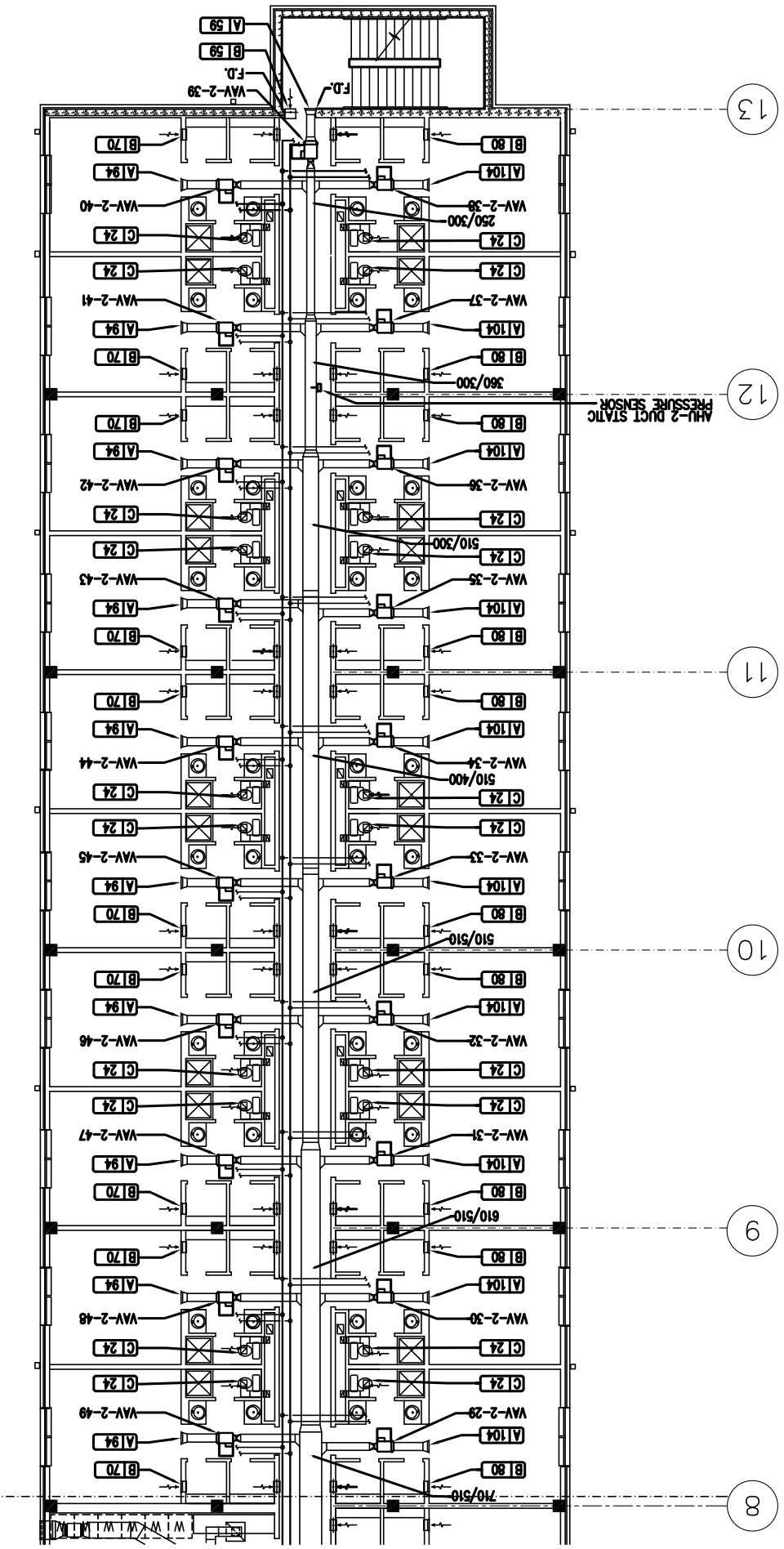

ENLARGED SECOND FLOOR LAUNDRY HVAC PLAN

SCALE: 1 = 50

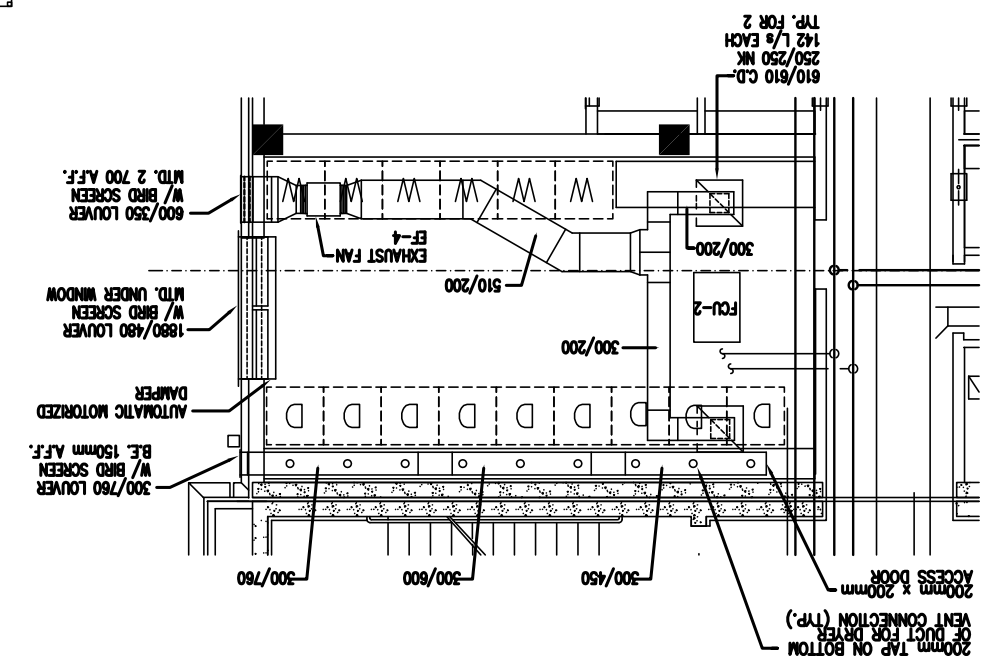

ENLARGED FIRST FLOOR LAUNDRY HVAC PLAN

SCALE: 1 = 50

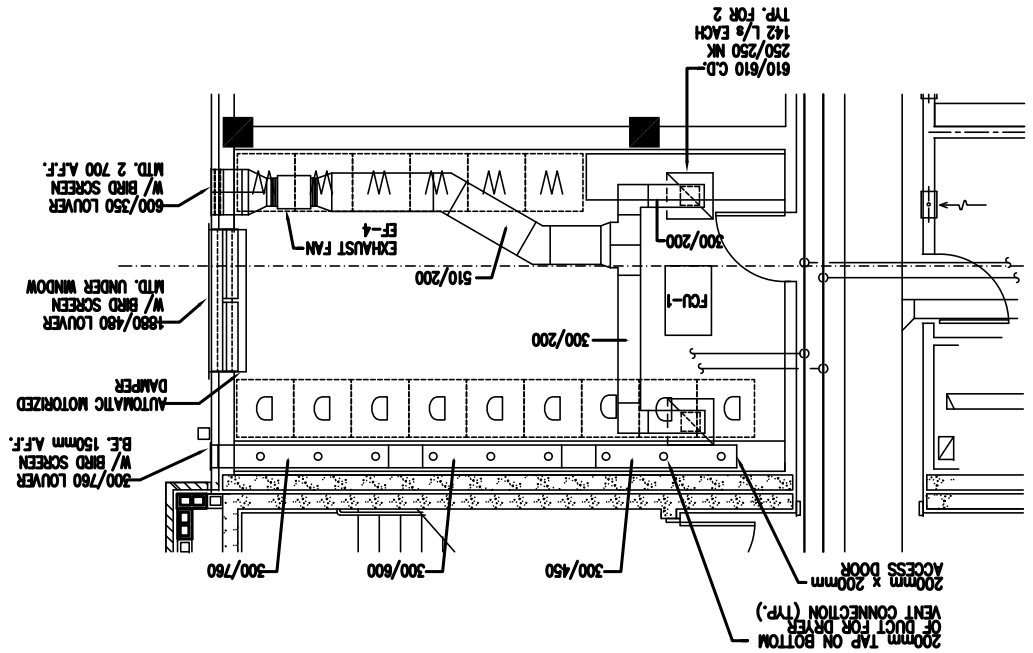

KEY PLAN

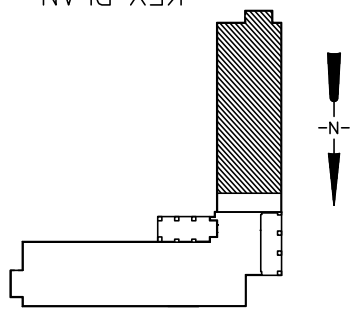

SCALE: 1 = 100

2000 0 2000mm

SCALE: 1 = 50

1000 0 1000mm

MAXWELL AIR FORCE BASE, ALABAMA
CDT STUDENT DORMITORY

PARTIAL SECOND FLOOR HVAC PLAN

Sheet Reference Number: M-05

Designed By: W.J. KNAPP	Date: MARCH 2002
Drawn By: W.J. KNAPP	File No: MAX-75-166
Checked By: W.C. THAMES	I.S.O. Sheet File Name: 304MCSF.DWG
Reviewed By: W.C. THAMES	Solicitation Number: DACA01-02-R-0028

U.S. ARMY ENGINEER DISTRICT
CORPS OF ENGINEERS
MOBILE, ALABAMA

Symbol	Description	Date	Approved

US Army Corps of Engineers
Mobile District

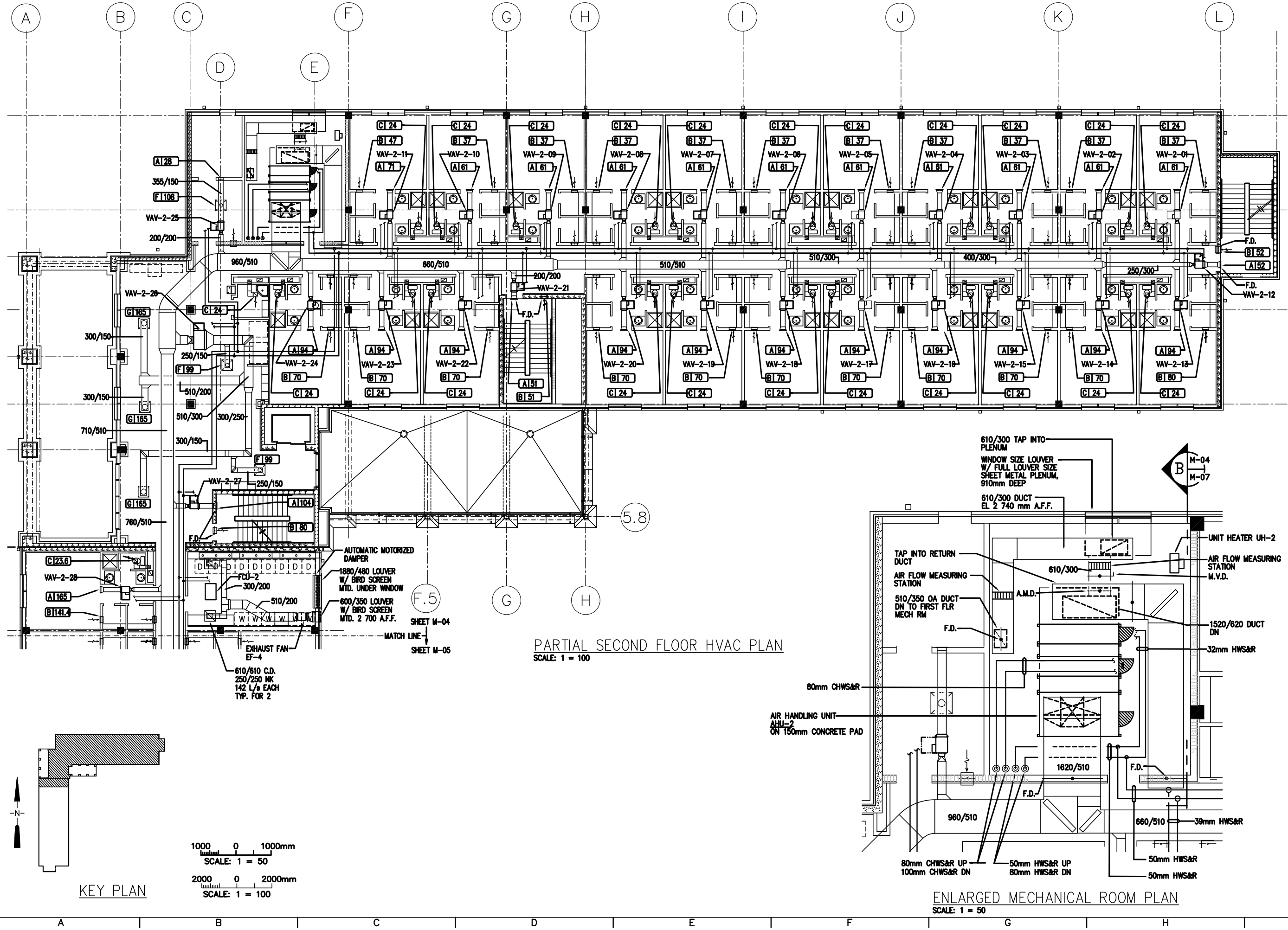

PARTIAL SECOND FLOOR HVAC PLAN

SCALE: 1 = 100

KEY PLAN

1000 0 1000mm
SCALE: 1 = 50

2000 0 2000mm
SCALE: 1 = 100

ENLARGED MECHANICAL ROOM PLAN

SCALE: 1 = 50

US Army Corps of Engineers
Mobile District

Symbol	Description	Date	Approved
	Description		

Designed By: W.J. KNAPP	Date: MARCH 2002
Drawn By: W.J. KNAPP	File No.: MAX-75-165
Checked By: W.C. THAMES	I.S.O. Sheet File Name: 304M04F.DWG
Reviewed By: W.C. THAMES	Solicitation Number: DACA01-02-R-0028

U.S. ARMY ENGINEER DISTRICT
CORPS OF ENGINEERS
MOBILE, ALABAMA

MAXWELL AIR FORCE BASE, ALABAMA
COT STUDENT DORMITORY

PARTIAL SECOND FLOOR HVAC PLAN

Sheet Reference Number:
M-04

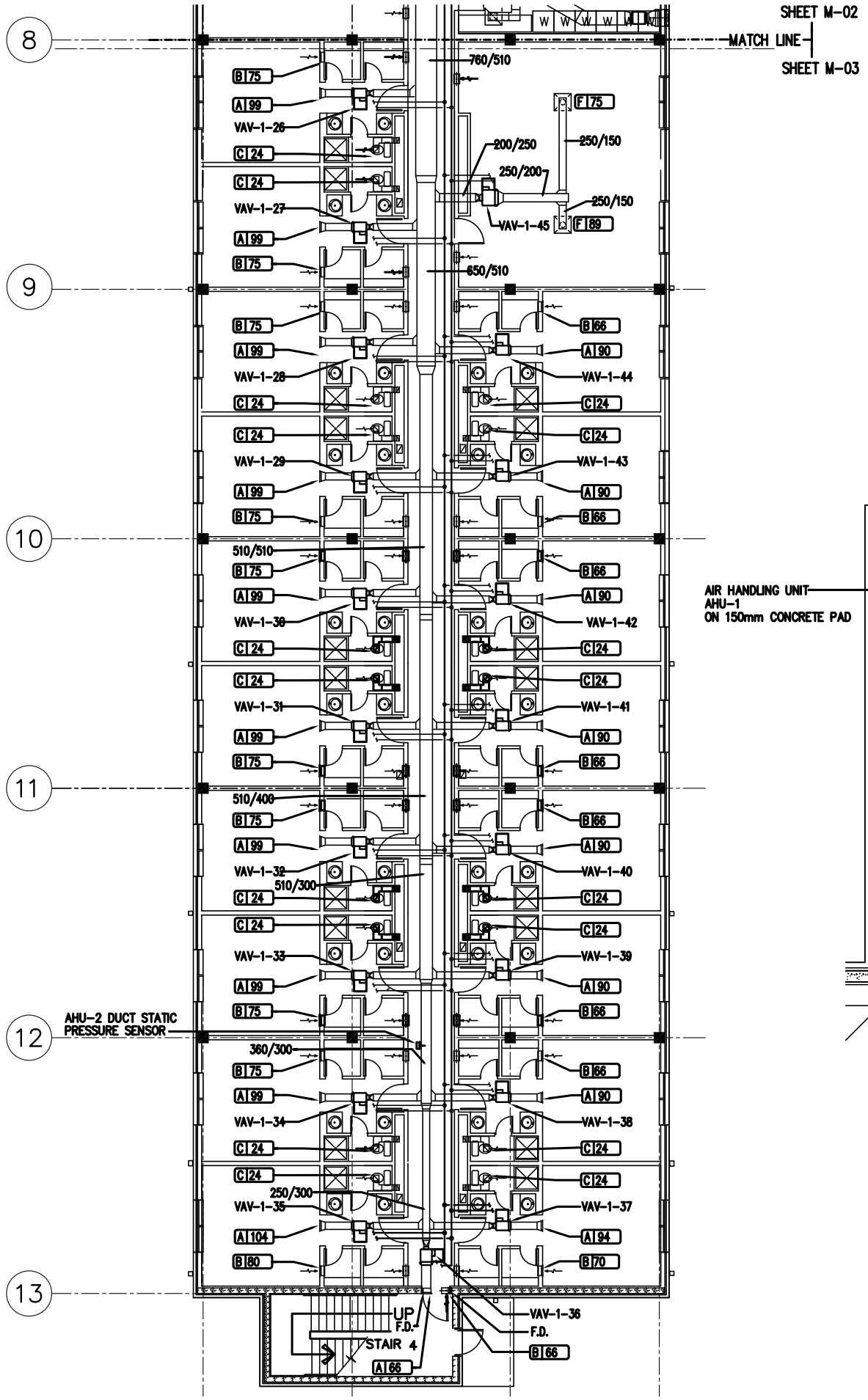

PARTIAL FIRST FLOOR HVAC PLAN
SCALE: 1 = 100

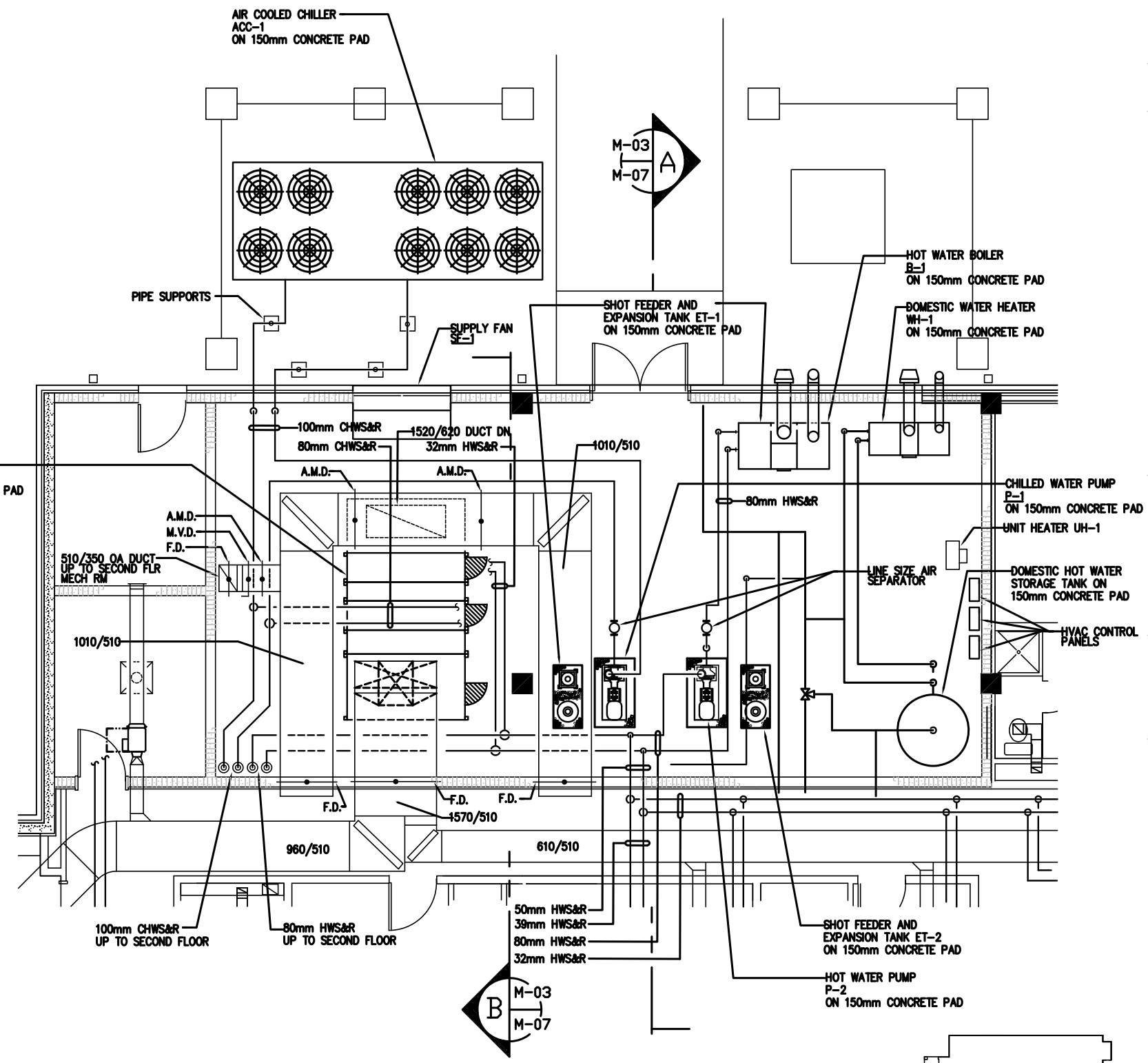

ENLARGED MECHANICAL ROOM PLAN
SCALE: 1 = 50

1000 0 1000mm
SCALE: 1 = 50

2000 0 2000mm
SCALE: 1 = 100

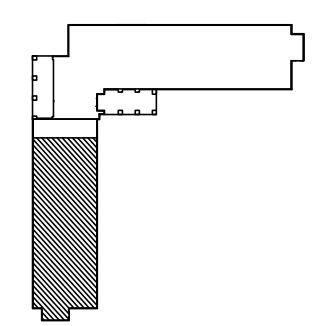

KEY PLAN

US Army Corps of Engineers
Mobile District

Symbol	Description	Date	Approved

Designed By: W.J. KNAPP
Drawn By: W.J. KNAPP
Checked By: W.C. THAMES
Reviewed By: W.C. THAMES
Date: MARCH 2002
File No. MAX-75-164
I.S.O. Sheet File Name: 304M03F.DWG
Solicitation Number: DACA01-02-R-0028

U.S. ARMY ENGINEER DISTRICT
CORPS OF ENGINEERS
MOBILE, ALABAMA

MAXWELL AIR FORCE BASE, ALABAMA
COT STUDENT DORMITORY

PARTIAL FIRST FLOOR
HVAC PLAN

Sheet Reference Number:
M-03

US Army Corps of Engineers
Mobile District

Symbol	Description	Date	Approved
	Description		

Date:	MARCH 2002
File No.	MAX-75-163
Dwg. Sheet File Name:	304M02F.DWG
Solicitation Number:	DACA01-02-R-0028
Designed By: W.J. KNAPP	
Drawn By: W.J. KNAPP	
Checked By: W.C. THAMES	
Reviewed By: W.C. THAMES	

U.S. ARMY ENGINEER DISTRICT
CORPS OF ENGINEERS
MOBILE, ALABAMA

MAXWELL AIR FORCE BASE, ALABAMA
COT STUDENT DORMITORY

PARTIAL FIRST FLOOR HVAC PLAN

Sheet Reference Number:
M-02

AS-BUILT

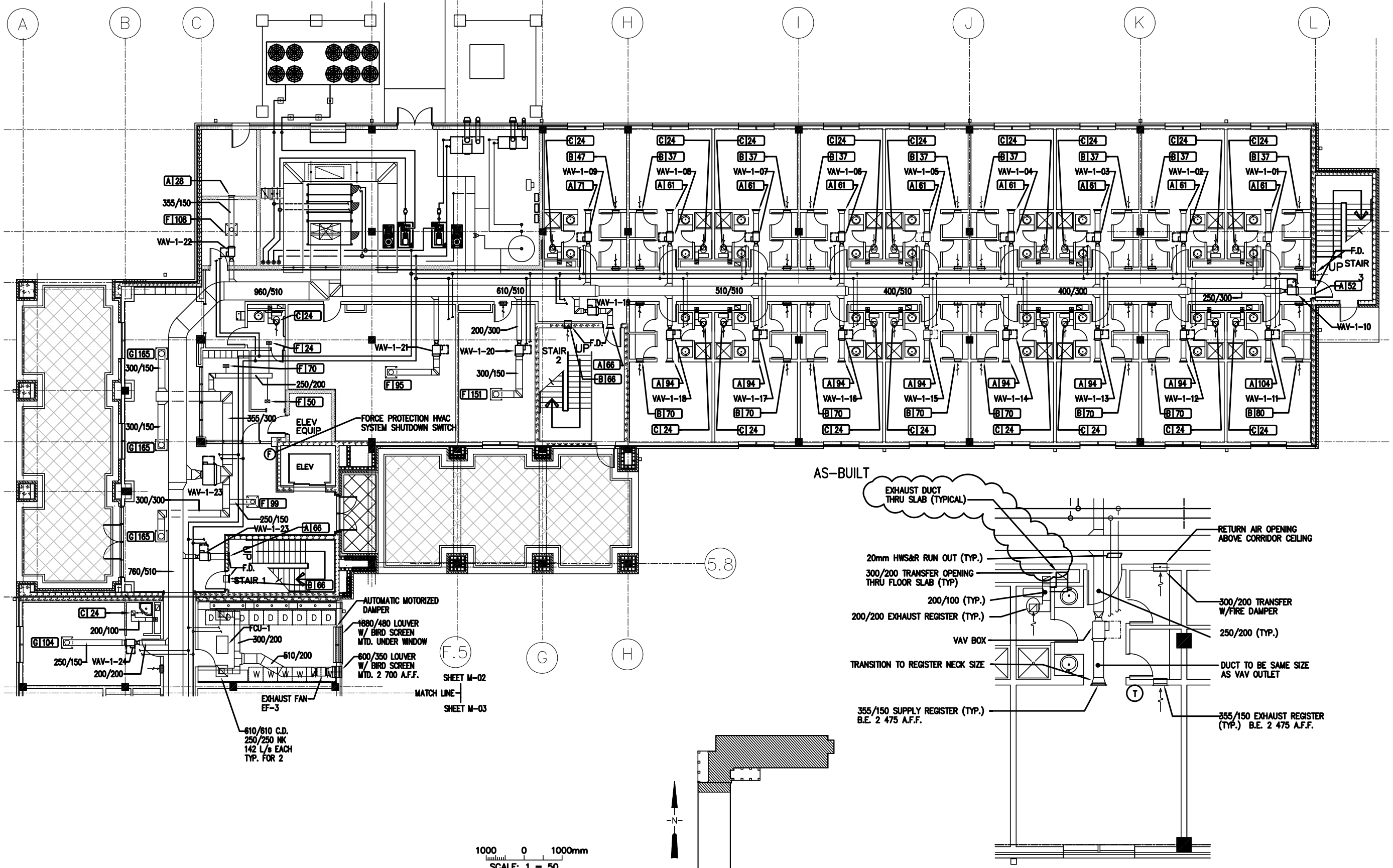

1000 0 1000mm
SCALE: 1 = 50

2000 0 2000mm
SCALE: 1 = 100

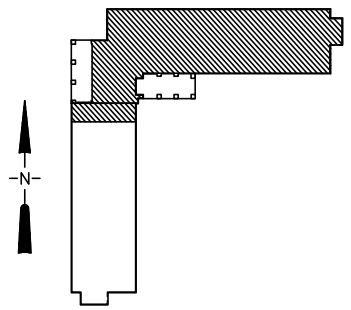

KEY PLAN

ENLARGED HVAC PLAN-TYPICAL ROOM
SCALE: 1 = 50

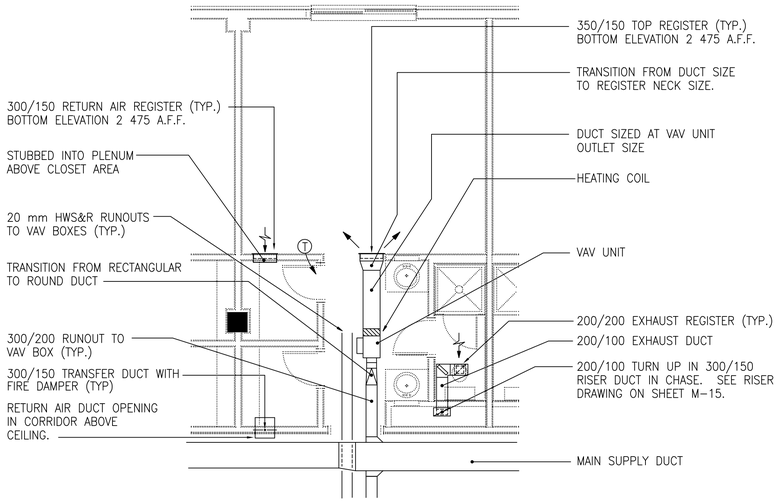

TYPICAL MODULE HVAC PLAN

SCALE: 1:50

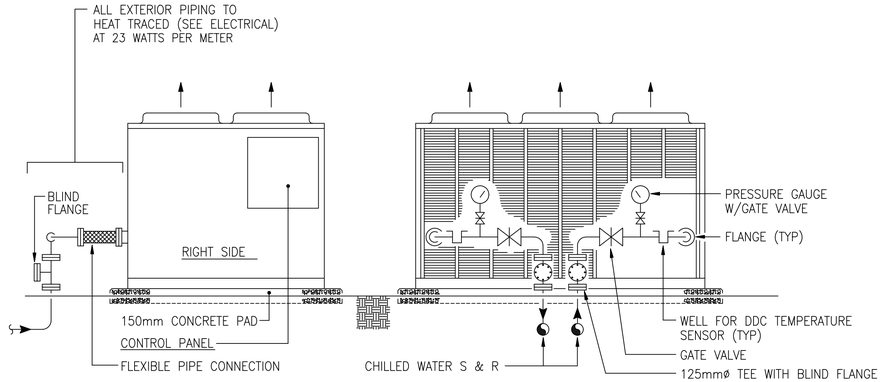

AIR-COOLED CHILLER PIPING CONNECTION DETAIL

N.T.S.

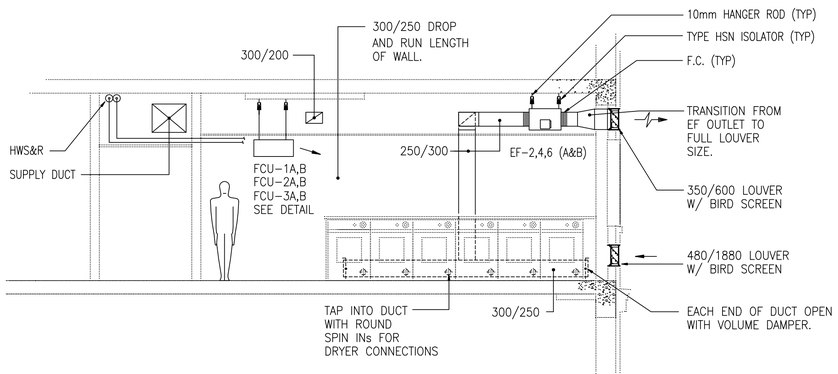

E-E SECTION E-E, LAUNDRY ROOM

SCALE: 1:50

M-02 | M-17
M-04
M-06
M-08
M-10
M-12

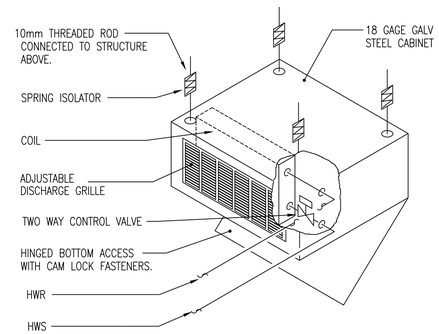

HORIZONTAL FAN COIL UNIT DETAIL

N.T.S.

US Army Corps of Engineers
Mobile District

Symbol	Description	Date	Approved
	Revisions		

Date: NOVEMBER 1998
File: MAX-67-155
Drawing CADD Code: M17F224.DWG
Solicitation Number: DACA01-99-B-0004

Designed By: THAMES, W.C.
Drawn By: THAMES, W.C.
Checked By: KNAPP, WILLIAM
Reviewed By: KASTNER, J.B.

U.S. ARMY ENGINEER DISTRICT
CORPS OF ENGINEERS
MOBILE, ALABAMA

MAXWELL AIR FORCE BASE, ALABAMA
OTS BOT DORMITORIES
TYPICAL MODULE HVAC PLANS
LARGE SCALE

Sheet Reference Number:
M-17

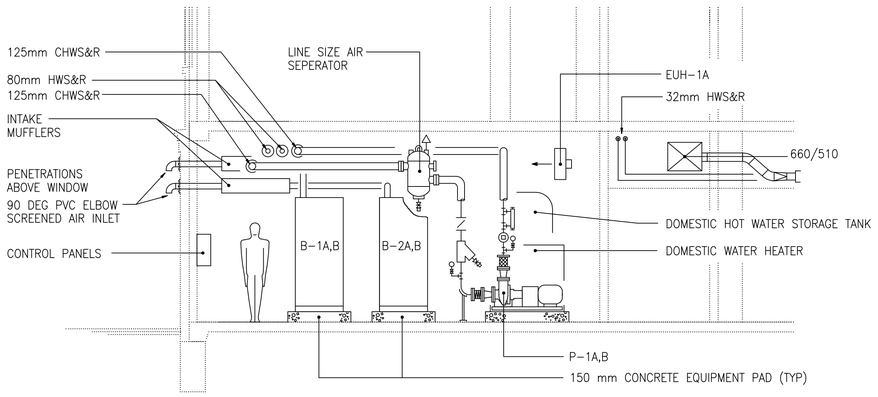

A-A SECTION A-A, 1ST FLOOR MECHANICAL ROOM

M-01 M-16 M-07 SCALE: 1:50

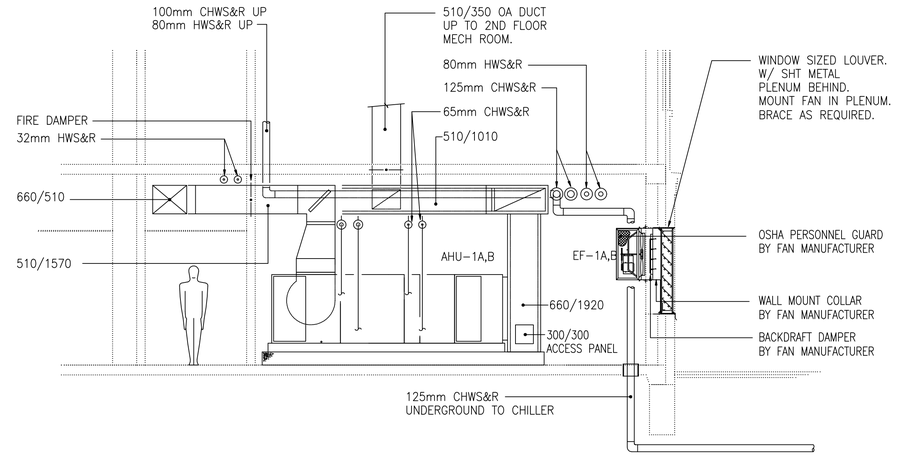

B-B SECTION B-B, 1ST FLOOR MECHANICAL ROOM

M-01 M-16 M-07 SCALE: 1:50

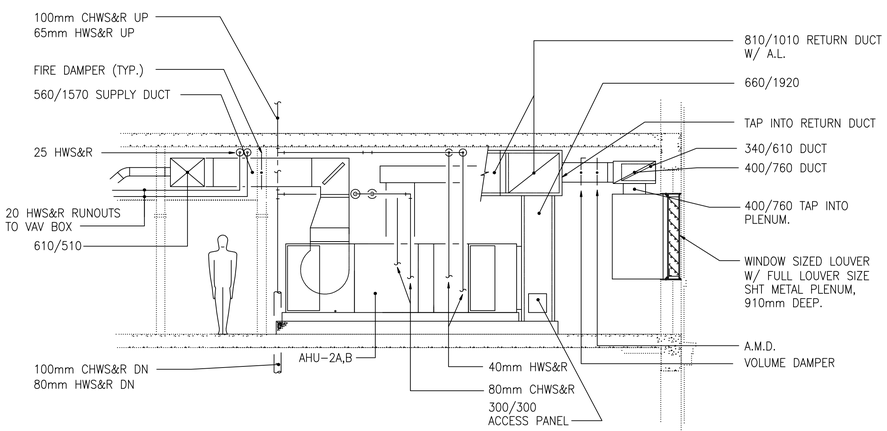

C-C SECTION C-C, 2ND FLOOR MECHANICAL ROOM

M-03 M-16 M-09 SCALE: 1:50

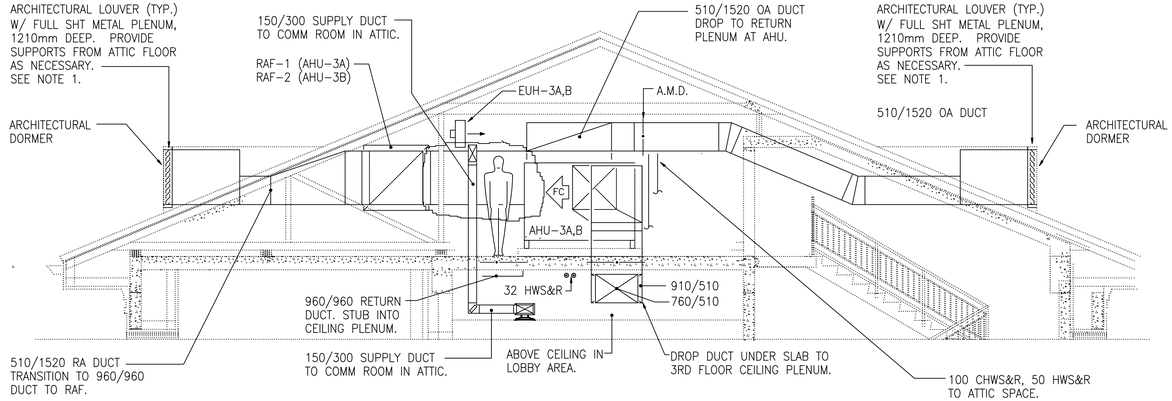

D-D SECTION D-D, ATTIC MECHANICAL ROOM

M-14 M-16 SCALE: 1:50

NOTE:
1. PROVIDE 1-1/2 HR. FIRE DAMPERS AT ALL DUCT PENETRATIONS THROUGH FLOOR SLAB.

2. THESE LOUVERS AND PLENUMS ARE SHAPED TO FIT THE FULL SIZE OF THE ARCHITECTURAL OPENINGS SHOWN ON THE ARCHITECTURAL DRAWINGS.

N O T E :
AS BUILT DRAWING
(AB) THIS SYMBOL INDICATES CHANGES MADE IN THE FIELD

US Army Corps of Engineers
Mobile District

Symbol	Description Revisions	Date	Approved

Designed By: THAMES, W.C.
Drawn By: THAMES, W.C.
Checked By: KNAPP, WILLIAM
Reviewed By: KASTNER, J.B.

Date: NOVEMBER 1998
File: MAX-67-154
Drawing CADD Code: M16F224.DWG
Solicitation Number: DACA01-99-B-0004

U.S. ARMY ENGINEER DISTRICT CORPS OF ENGINEERS MOBILE, ALABAMA

MAXWELL AIR FORCE BASE, ALABAMA
OTS BOT DORMITORIES
MECH ROOM SECTIONS
BLDG A & B

Sheet Reference Number:
M-16

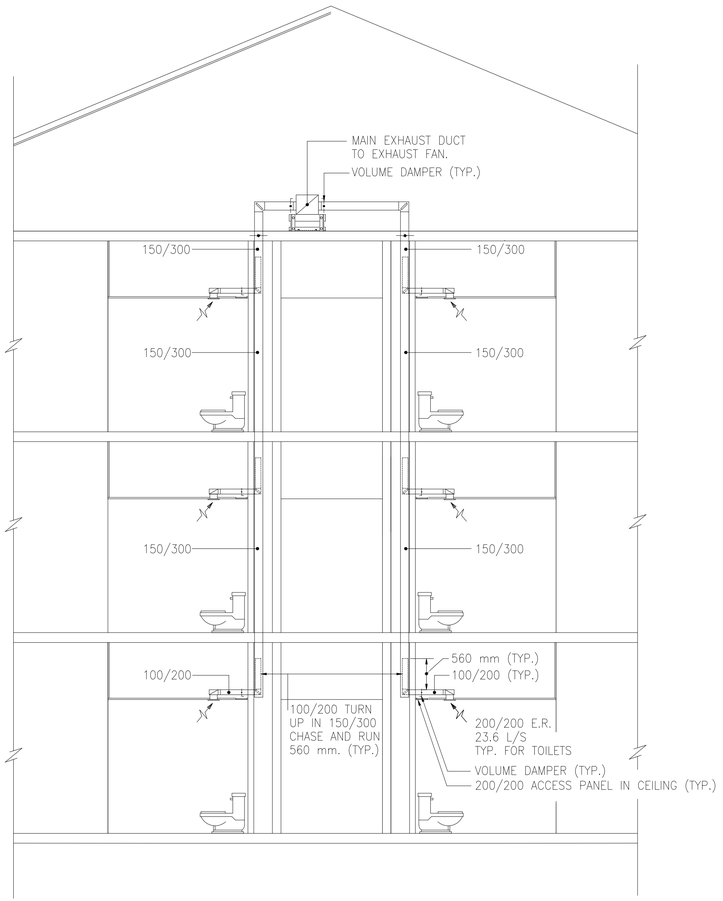

TYPICAL BATHROOM EXHAUST RISER

SCALE: 1:50

NOTE: SIZES ARE APPLICABLE TO JANITOR CLOSET RISERS, ALSO.

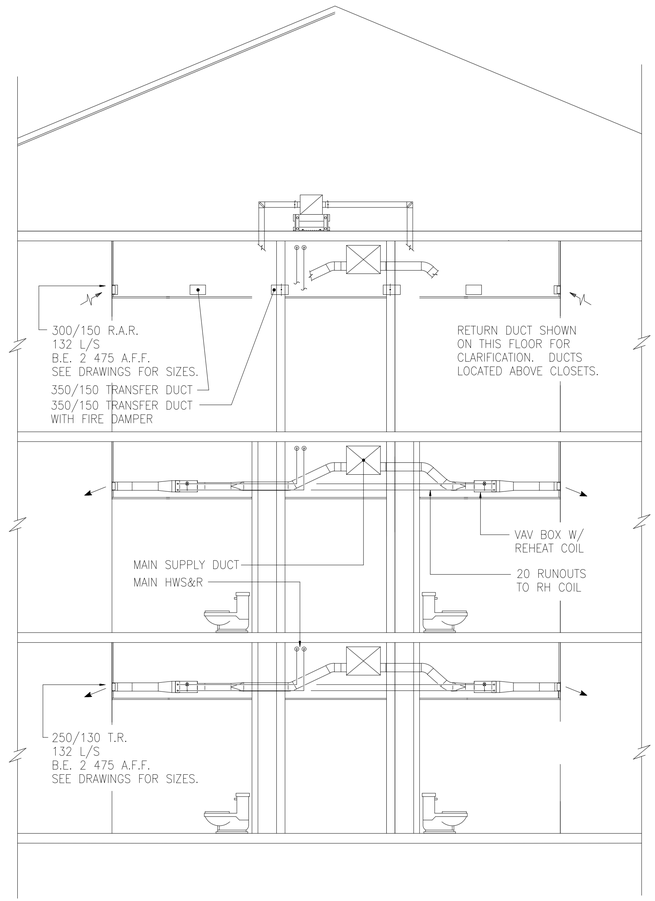

TYPICAL SECTION SHOWING VAV BOXES

SCALE: 1:50

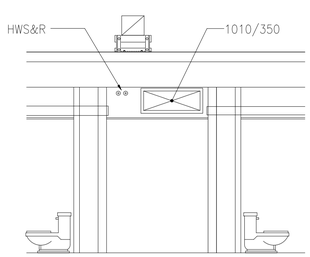

TYPICAL SECTION AT DEEP BEAM, THIRD FLOOR

SCALE: 1:50

US Army Corps of Engineers
Mobile District

Symbol	Description Revisions	Date	Approved

Date: NOVEMBER 1998
File: MAX-67-153
Drawing CADD Code: M15F224.DWG
Solicitation Number: DACA01-99-B-0004

Designed By: THAMES, W.C.
Drawn By: THAMES, W.C.
Checked By: KNAPP, WILLIAM
Reviewed By: KASTNER, J.B.

U.S. ARMY ENGINEER DISTRICT
CORPS OF ENGINEERS
MOBILE, ALABAMA

MAXWELL AIR FORCE BASE, ALABAMA
OTS BOT DORMITORIES
DUCT RISERS
BLDG A & B

Sheet Reference Number:
M-15

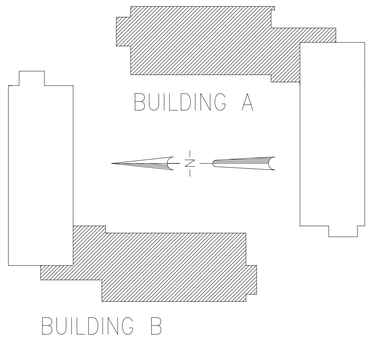

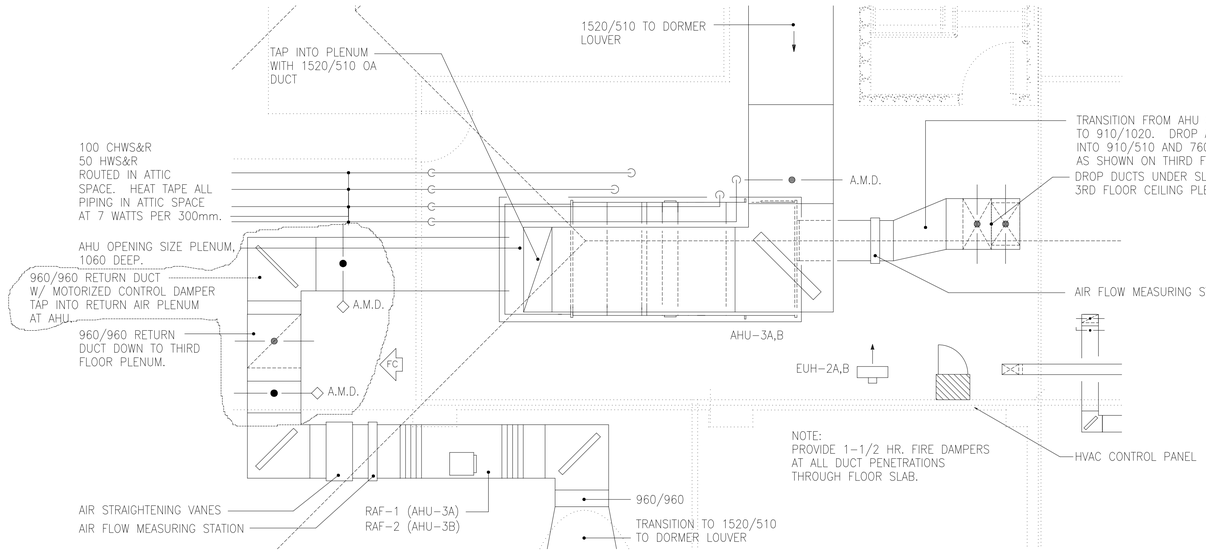

ENLARGED ATTIC PLAN AT MECH ROOM

SCALE: 1:50

NOTES:

1. DUCT PRESSUSE CLASSIFICATION AND SEAL CLASS SHALL BE AS FOLLOWS:

   A. DUCTS UPSTREAM OF VAV BOXES; 50mm W.G. SEAL CLASS 'B'.

   B. DUCTS DOWN STREAM OF VAV BOXES; 25mm W.G. SEAL CLASS 'C'.

   C. EXHAUST DUCTS; 15mm W.G., SEAL CLASS 'C'.

   D. RETURN DUCTS; 25mm W.G., SEAL CLASS 'C'.

2. ALL DUCT DIMENSIONS SHOWN ARE INSIDE METAL.

3. AIR HANDLING UNITS SHOWN HAVE INTERNALLY ISOLATED MOTOR AND FAN. IF UNIT PROVIDED DOES NOT HAVE ISOLATED MOTOR AND FAN CONTRACTOR MUST PROVIDE VIBRATION ISOLATORS AND FLEX CONNECTIONS ON UNITS.

4. DUCT RUNOUTS FROM MAINS TO TRANSITIONS AT VAV BOXES SHALL BE 250/200 UNLESS OTHERWISE NOTED.

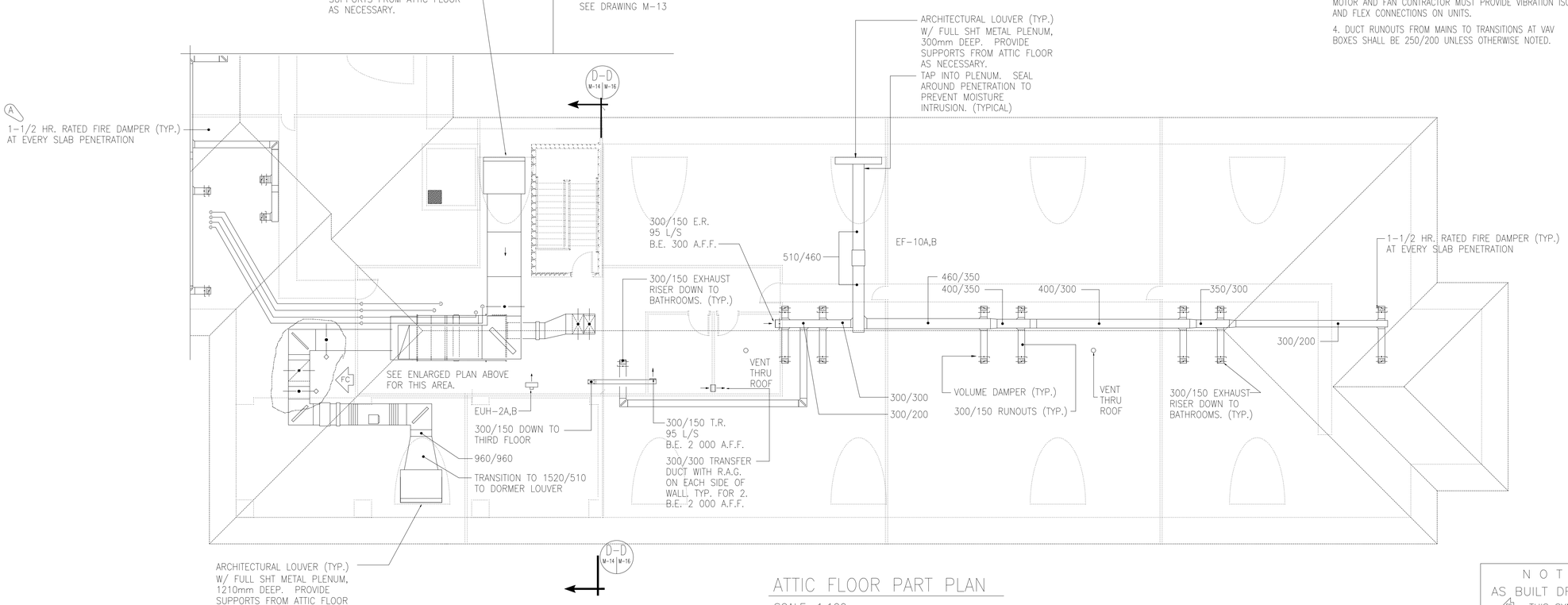

ATTIC FLOOR PART PLAN

SCALE: 1:100

NOTE:
AS BUILT DRAWING
(F) THIS SYMBOL INDICATES CHANGES MADE IN THE FIELD

US Army Corps of Engineers
Mobile District

Symbol	No.	Description	Date	Approved
A	1	REVISED PENETRATION RATING	8 JAN 99	JBK

Revisions

Date: NOVEMBER 1998
File: MAX-67-152
Drawing CADD Code: M14F224.DWG
Solicitation Number: DACA01-99-B-0004

Designed By: THAMES, W.C.
Drawn By: THAMES, W.C.
Checked By: KNAPP, WILLIAM
Reviewed By: KASTNER, J.B.

U.S. ARMY ENGINEER DISTRICT
CORPS OF ENGINEERS
MOBILE, ALABAMA

MAXWELL AIR FORCE BASE, ALABAMA
OTS BOT DORMITORIES
ATTIC FLOOR PLAN
BLDG A, B - ATTIC PLAN

Sheet Reference Number:
M-14

AMENDMENT 0003

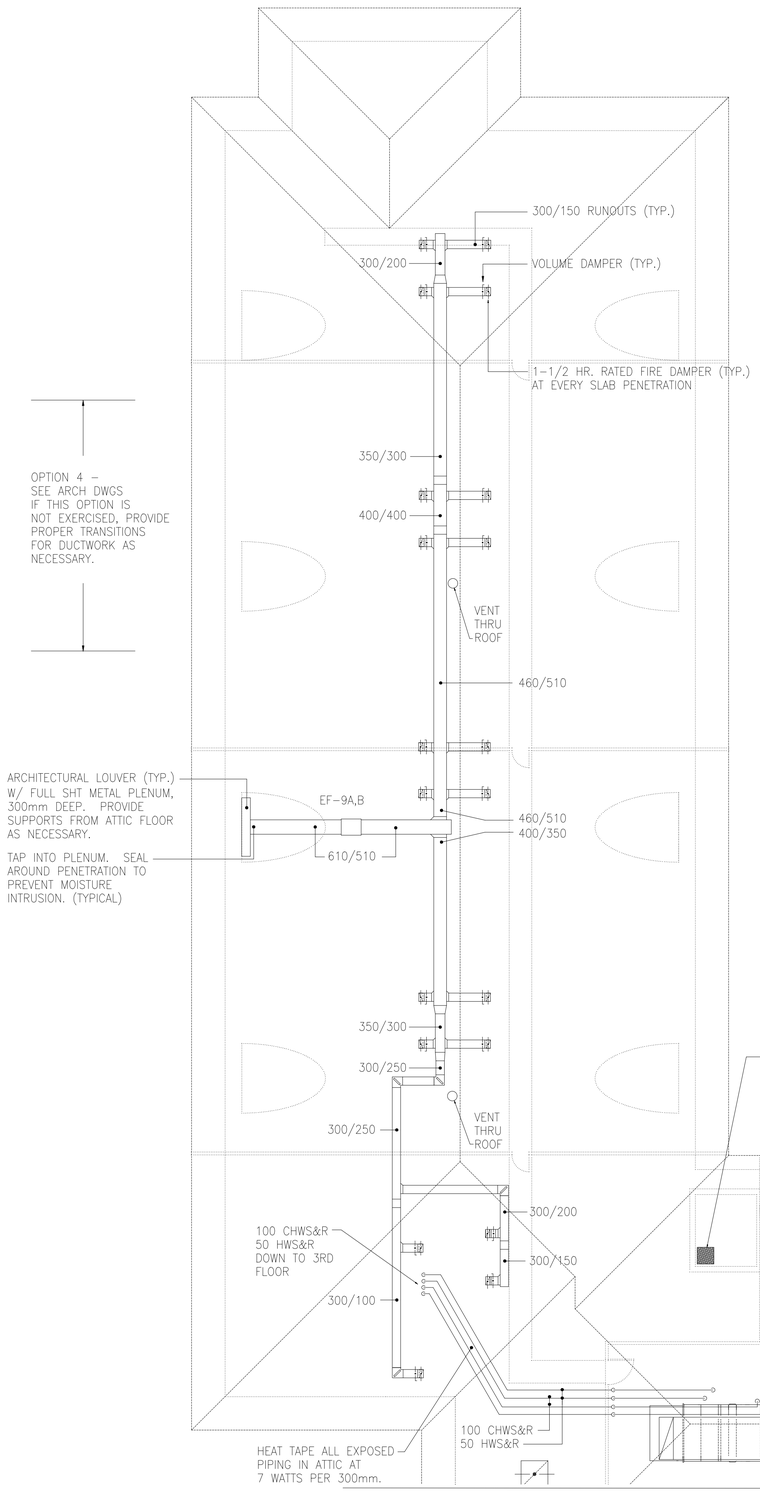

MATCHLINE
SEE DRAWING M-14

ATTIC FLOOR PART PLAN

SCALE: 1:100

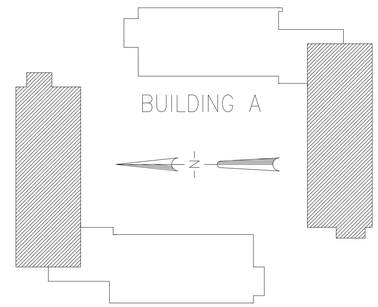

NOTES:

1. DUCT PRESSUSE CLASSIFICATION AND SEAL CLASS SHALL BE AS FOLLOWS:

   A. DUCTS UPSTREAM OF VAV BOXES; 50mm W.G. SEAL CLASS 'B'.

   B. DUCTS DOWN STREAM OF VAV BOXES; 25mm W.G. SEAL CLASS 'C'.

   C. EXHAUST DUCTS; 15mm W.G., SEAL CLASS 'C'.

   D. RETURN DUCTS; 25mm W.G., SEAL CLASS 'C'.

2. ALL DUCT DIMENSIONS SHOWN ARE INSIDE METAL.

3. AIR HANDLING UNITS SHOWN HAVE INTERNALLY ISOLATED MOTOR AND FAN. IF UNIT PROVIDED DOES NOT HAVE ISOLATED MOTOR AND FAN CONTRACTOR MUST PROVIDE VIBRATION ISOLATORS AND FLEX CONNECTIONS ON UNITS.

4. DUCT RUNOUTS FROM MAINS TO TRANSITIONS AT VAV BOXES SHALL BE 250/200 UNLESS OTHERWISE NOTED.

US Army Corps of Engineers
Mobile District

Symbol	Description Revisions	Date	Approved

Date:	NOVEMBER 1998
File:	MAX-67-151
Drawing CADD Code:	M13F224.DWG
Solicitation Number:	DACA01-99-B-0004
Designed By:	THAMES, W.C.
Drawn By:	THAMES, W.C.
Checked By:	KNAPP, WILLIAM
Reviewed By:	KASTNER, J.B.

U.S. ARMY ENGINEER DISTRICT
CORPS OF ENGINEERS
MOBILE, ALABAMA

MAXWELL AIR FORCE BASE, ALABAMA
OTS BOT DORMITORIES
ATTIC FLOOR PLAN
BLDG A, B - ATTIC PLAN

Sheet Reference Number:
M-13

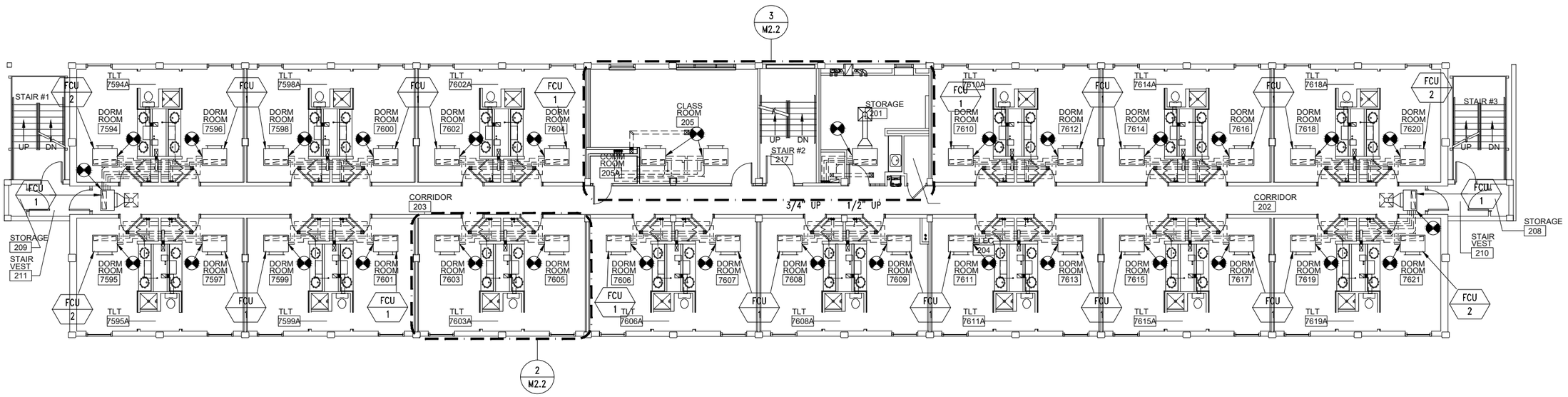

1 SECOND FLOOR MECHANICAL PLAN – BLDG 1430
M2.2 1/8" = 1'-0"

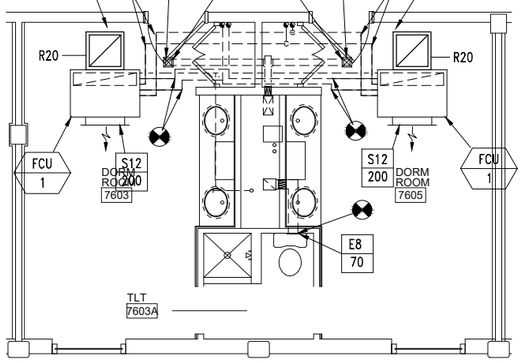

NOTES:

1. IF FCU-2 IS USED IN DORM ROOM, PROVIDE S18 GRILLE AT 400 CFM.
2. FCU LOCATION SHOWN IS DIAGRAMMATIC FOR CLARITY. FCU SHALL BE INSTALLED ABOVE LAY-IN CEILING IN BULKHEAD IN SAME LOCATION AS PREVIOUS FCU. COORDINATE WITH ARCH. RCP.

2 TYPICAL DORM ROOM PLAN – SECOND FLOOR
M2.2 M2.2 1/4" = 1'-0"

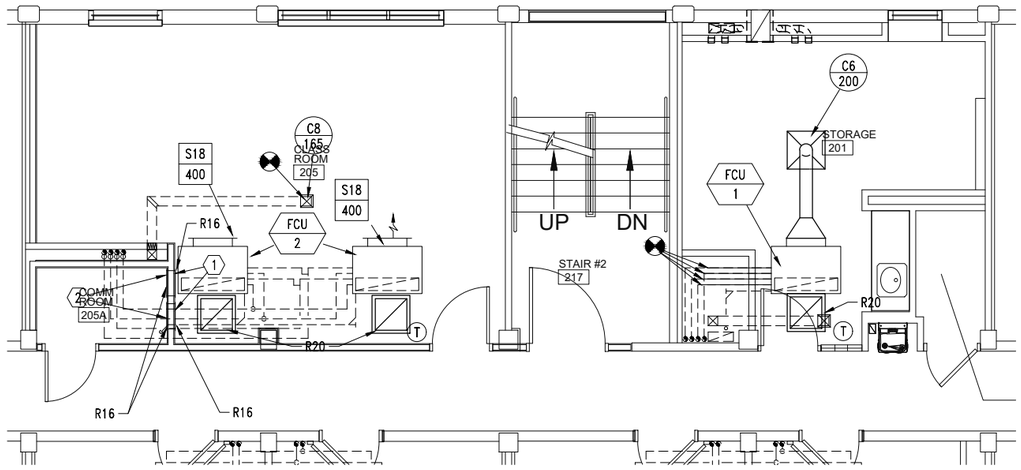

3 LARGE SCALE MECHANICAL PLAN – ROOM 205
M2.2 M2.2 1/4" = 1'-0"

SHEET NOTES:

1. INSTALL INSULATION ON ALL NEW AND EXISTING CHILLED WATER PIPING. FIELD VERIFY EXISTING PIPE SIZES. INSULATION SHALL BE PER SPECIFICATIONS.
2. REFER TO B / M0.4 FOR FCU PIPING CONNECTION DETAIL.
3. CONNECT NEW FCU'S TO EXISTING CONDENSATE DRAIN PIPING.
4. RETURN GRILLES SERVING FAN COIL UNITS SHALL BE INSTALLED IN CEILING GRID UNDERNEATH UNITS. NO DUCT CONNECTION SHALL BE EXTENDED FROM GRILLE TO FCU, AND AIR SHALL BE ABLE TO PASS FREELY FROM THE ROOM INTO THE FCU AIR INTAKE.

KEYED NOTES

(1) INSTALL GRILLE IN WALL 6" BELOW CEILING WITH BLADES ANGLED UPWARD.

(2) INSTALL GRILLE IN WALL WITH BLADES ANGLED UPWARD.

SCALE: 1/4" = 1'-0"
0 2' 4' 8'

SCALE: 1/8" = 1'-0"
0 4' 8' 16'

Symbol	Description	Date	Approved
1	CHANGES	06AUG2018	RJ

Revisions

Designed By:
Drawn By: JKN
Checked By: WDS
Reviewed By:

Date: 5 JANUARY 2018
Scale: AS NOTED
Drawing Sheet File:
Drawing Folder: 1430-5244

MAXWELL AIR FORCE BASE
42 CES/CEN
MAXWELL AFB, ALABAMA 36112

PNQS 16-5244

RENOVATION ROTC
BLDG 1430
MAXWELL AFB, AL

SECOND FLOOR MECHANICAL PLAN – BLDG 1430

Sheet Reference Number:
BI.1/M2.2

1 : 1

R:\Indesign\maxwell\1430\PNQS 16-5245 Renovate 1430 1433 1434\PNQS165244 Renovate ROTC Dorm 1430\8-6-18 DRAWINGS\Mech\M2.2 SECOND FLOOR MECHANICAL PLAN - BLDG 1430.dwg 4/20/2016 9:11:47 AM BREDLOW, SANDRA Y CTR USAF AETC 42 CES/CENMP

1 : 1
R:\Indesign\maxwell\1430\PNQS 16-5245 Renovate 1430 1433 1434\PNQS165244 Renovate ROTC Dorm 1430\8-6-18 DRAWINGS\Mech\M2.1 FIRST FLOOR MECHANICAL PLAN - BLDG 1430.dwg 8/6/2026 9:10:37 AM BREDLOW, SANDRA Y CTR USAF AETC 42 CES/CENMP

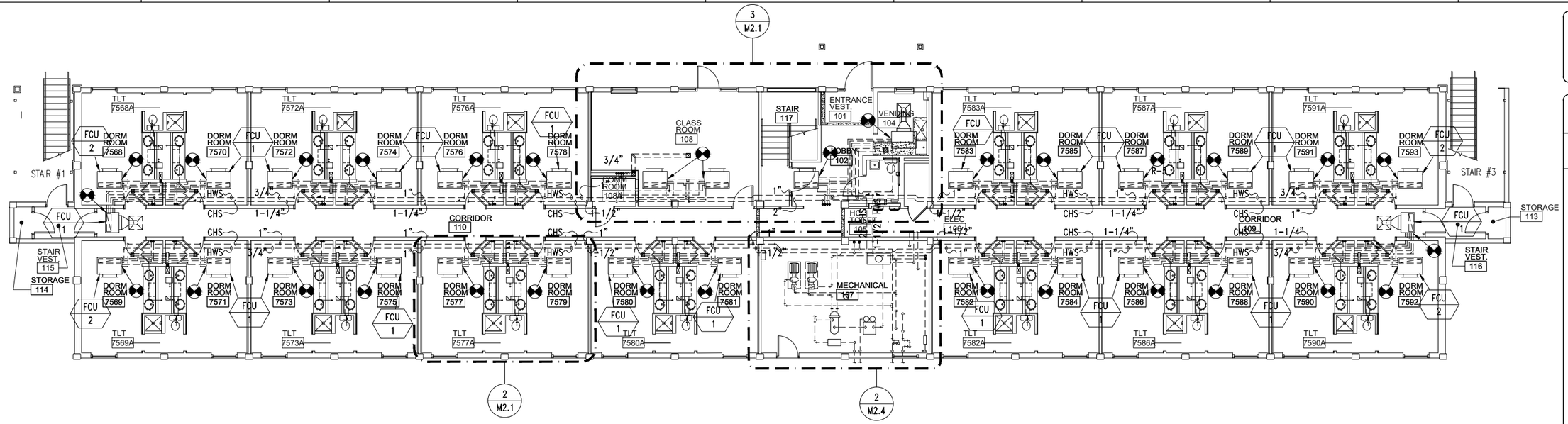

1 M2.1 FIRST FLOOR MECHANICAL PLAN – BLDG 1430
1/8" = 1'-0"

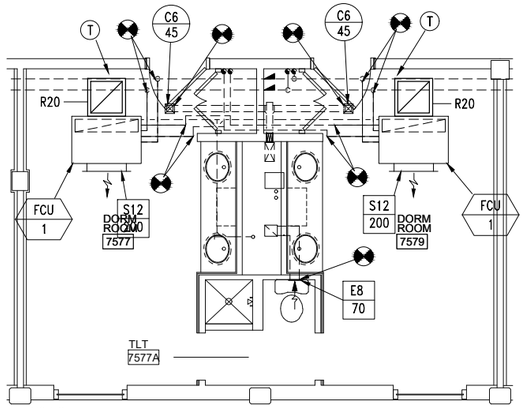

NOTES:

1. IF FCU-2 IS USED IN DORM ROOM, PROVIDE S18 GRILLE AT 400 CFM.
2. FCU LOCATION SHOWN IS DIAGRAMMATIC FOR CLARITY. FCU SHALL BE INSTALLED ABOVE LAY-IN CEILING IN BULKHEAD IN SAME LOCATION AS PREVIOUS FCU. COORDINATE WITH ARCH. RCP.

2 M2.1 TYPICAL DORM ROOM PLAN – FIRST FLOOR
1/4" = 1'-0"

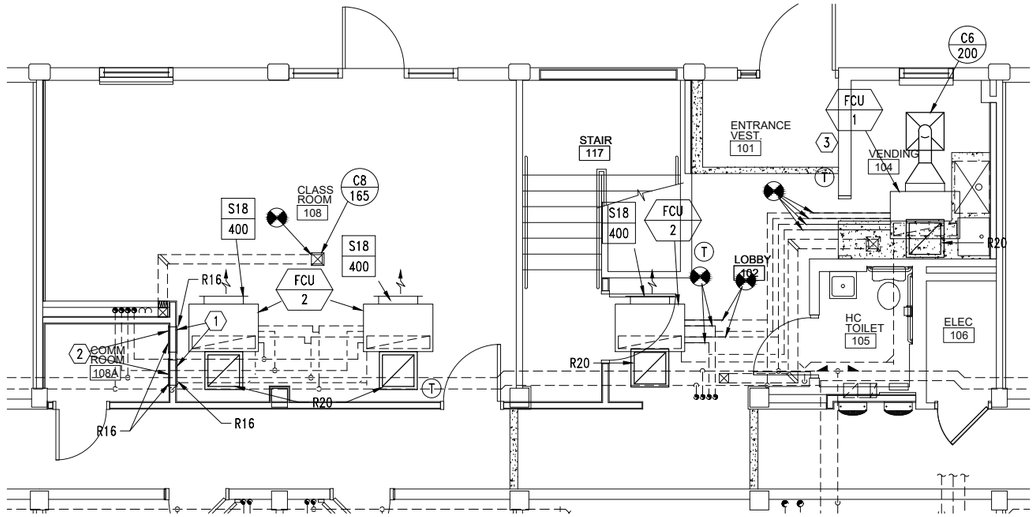

3 M2.1 LARGE SCALE MECHANICAL PLAN – ROOM 108
1/4" = 1'-0"

SHEET NOTES:

1. INSTALL INSULATION ON ALL NEW AND EXISTING CHILLED WATER PIPING. FIELD VERIFY EXISTING PIPE SIZES. INSULATION SHALL BE PER SPECIFICATIONS.
2. REFER TO B / M0.4 FOR FCU PIPING CONNECTION DETAIL.
3. CONNECT NEW FCU'S TO EXISTING CONDENSATE DRAIN PIPING.
4. RETURN GRILLES SERVING FAN COIL UNITS SHALL BE INSTALLED IN CEILING GRID UNDERNEATH UNITS. NO DUCT CONNECTION SHALL BE EXTENDED FROM GRILLE TO FCU, AND AIR SHALL BE ABLE TO PASS FREELY FROM THE ROOM INTO THE FCU AIR INTAKE.

KEYED NOTES

(1) INSTALL GRILLE IN WALL 6" BELOW CEILING WITH BLADES ANGLED UPWARD.

(2) INSTALL GRILLE IN WALL WITH BLADES ANGLED UPWARD.

(3) PROVIDE HVAC EMERGENCY SHUT-OFF SWITCH IN THE LOC FOR THE MASS NOTIFICATION SYSTEM THAT WILL DISABLE THE OPERATION OF OF DOAS-1430 UNTIL MANUALLY RESET. PROVIDE PERMANENT SIGN ON WALL INDICATING HVAC EMERGENCY SHUT-OFF SWITCH. REFER TO ELECTRICAL.

SCALE: 1/4" = 1'-0"
0 2' 4' 8'

SCALE: 1/8" = 1'-0"
0 4' 8' 16'

Symbol	Description	Date	Approved
1	06AUG2018 CHANGES	06AUG2018	RJ

Revisions

Designed By:
Drawn By: JKN
Checked By: WDS
Reviewed By:

Date: 5 JANUARY 2018
Scale: AS NOTED
Drawing Sheet Filer:
Drawing Folder: 1430-5244

MAXWELL AIR FORCE BASE
42 CES/CEN
MAXWELL AFB, ALABAMA 36112

PNQS 16-5244

RENOVATION ROTC
BLDG 1430
MAXWELL AFB, AL

FIRST FLOOR MECHANICAL PLAN – BLDG 1430

Sheet Reference Number:
BI.1/M2.1

1 : 1

R:\Indesign\maxwell\1430\PNOS 16-5245 Renovate 1430 1433 1434\PNOS165244 Renovate ROTC Dorm 1430\8-6-18 DRAWINGS\Mech\M2.4 ATTIC MECHANICAL PLAN - BLDG 1430.dwg4/22/2026 9:13:01 AM BREDLOW, SANDRA Y CTR USAF AETC 42 CES/CENMP

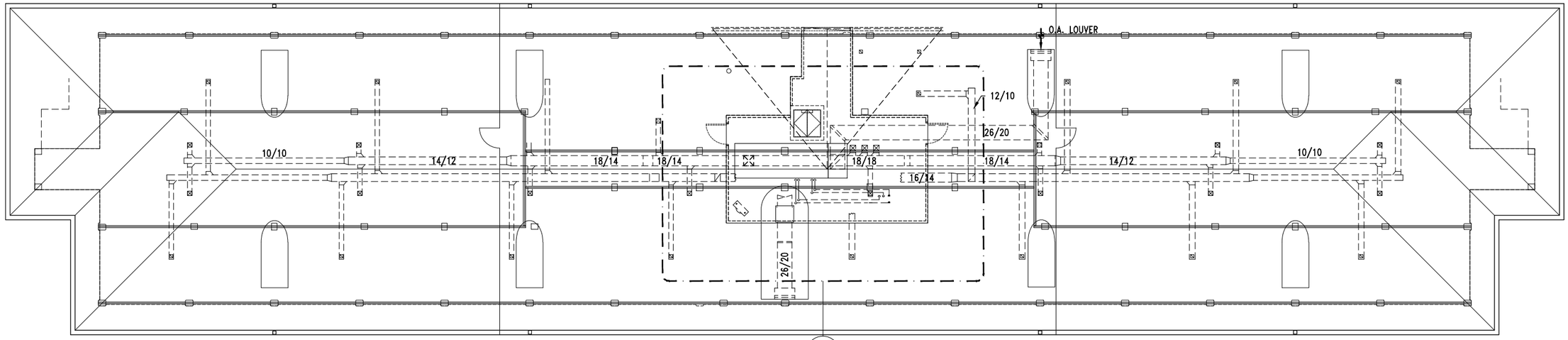

1 M2.4 ATTIC MECHANICAL PLAN – BLDG 1430
1/8" = 1'-0"

3 M2.4

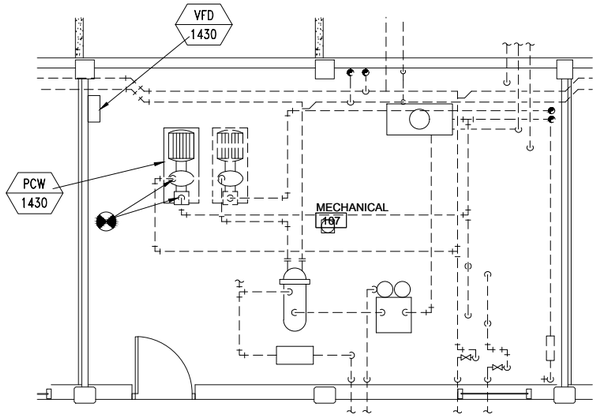

2 M2.1 M2.4 LARGE SCALE MECHANICAL ROOM PLAN
1/4" = 1'-0"

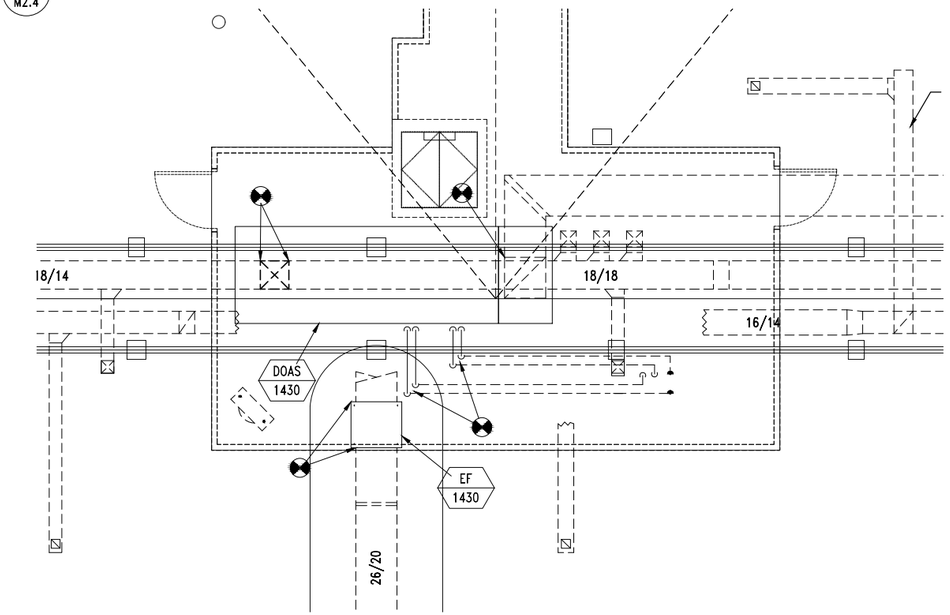

3 M2.4 M2.4 LARGE SCALE MECH. ATTIC PLAN
1/4" = 1'-0"

SHEET NOTES

1. MODIFY EX. ATTIC DUCTWORK AS REQUIRED TO CONNECT TO DOAS AHU CONNECTIONS. FIELD VERIFY EX. CONDITIONS.
2. INSTALL AHU THROUGH ATTIC DORMER OPENING. REFER TO M0.5.
3. REFER TO C/M0.4 FOR DOAS PIPING CONNECTION DETAIL.
4. CONNECT DOAS CONDENSATE DRAIN TO EXISTING DRAIN PIPING.

SCALE: 1/4" = 1'-0"
0 2' 4' 8'

SCALE: 1/8" = 1'-0"
0 4' 8' 16'

Symbol	Description	Date	Approved
1	CHANGES	08AUG2018	RJ
2	Revisions	08AUG2018	

Designed By:
Drawn By: JKN
Checked By: WDS
Reviewed By:

Date: 5 JANUARY 2018
Scale: AS NOTED
Drawing Sheet File:
Drawing Folder: 1430-5244

MAXWELL AIR FORCE BASE
42 CES/CEN
MAXWELL AFB, ALABAMA 36112

PNOS 16-5244

RENOVATION ROTC
BLDG 1430
MAXWELL AFB, AL

ATTIC MECHANICAL PLAN
– BLDG 1430

Sheet Reference Number:
BI.1/M2.4

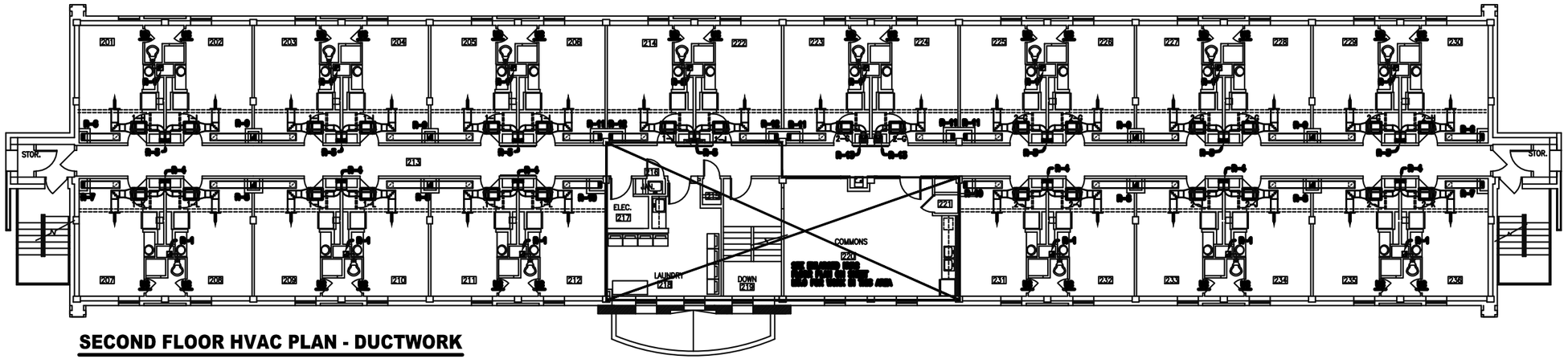

SECOND FLOOR HVAC PLAN - DUCTWORK

SCALE: 1/8"=1'-0"

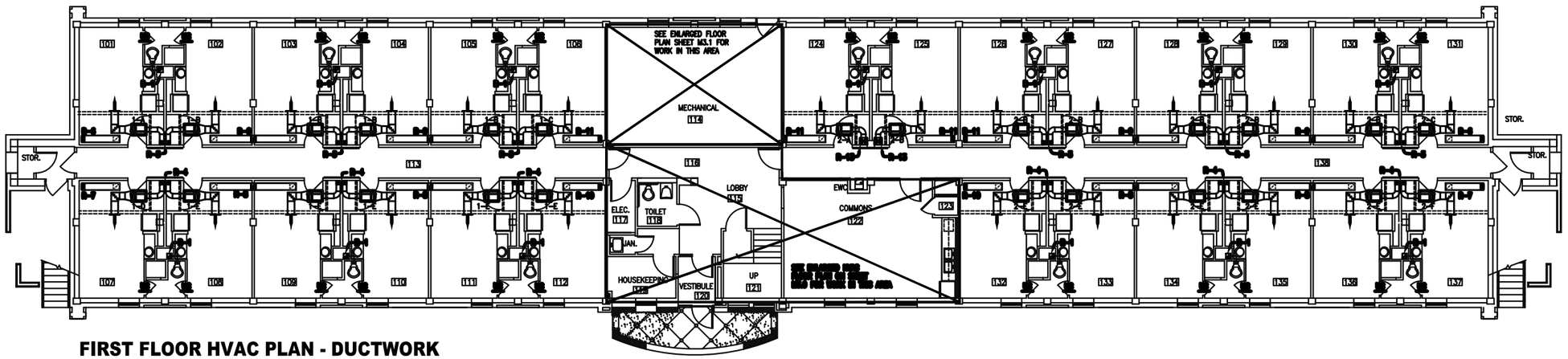

FIRST FLOOR HVAC PLAN - DUCTWORK

SCALE: 1/8"=1'-0"

GENERAL NOTES:

1. [illegible]

2. [illegible]

3. [illegible]

DATE	REVISION NO. & DESCRIPTION	BY

PROJECT TITLE:

REPAIR SOS BLDG. 1432
PNQS 95-1057
MAFB, AL

PROJECT NO.: PNQS 95-1057

DRAWING TITLE:

FIRST AND SECOND FLOOR HVAC PLANS - DUCTWORK

DRAWN BY: GEL/MBS	DESIGNED BY: FWH
DATE: OCT. 1, 1998	SCALE: 1/8" = 1'-0"
REF. SHEET: M2.2	SHEET: 19 OF 42

DRAWING NUMBER: M0145Z-0001

GENERAL NOTES:

1. ALL NEW PENETRATIONS SHALL BE SAW CUT OR CORE DRILLED. COORDINATE REQUIRED SIZES WITH ALL TRADES INVOLVED.

2. DUCT SIZES: TAKE MEASUREMENTS AT JOB AND FIT WORK INTO AVAILABLE SPACES. REPORT ANY UNAVOIDABLE CONFLICTS ENCOUNTERED. UNLESS OTHERWISE APPROVED, CONFORM TO SHOPWORK DRAWINGS. DUCT DIMENSIONS SHOWN ARE INSIDE NET FREE AREA AFTER INSTALLATION OF DUCT LINER MATERIAL.

3. ACCESS PANELS AND DOORS: FURNISH TO GENERAL CONTRACTOR FOR INSTALLATION ACCESSIBLE DOORS FOR ACCESS TO VALVE, DAMPER, FIRE DAMPER, AIR VENT, OR SIMILAR DEVICE. DOORS SHALL BE SUITABLE FOR TILE OR CEILING PANEL MOUNTING, 12"X18" UNLESS OTHERWISE REQUIRED OR NECESSARY TO PERMIT REMOVAL OF EQUIPMENT AND/OR MAINTENANCE ACCESS. FIRE RATED DOORS FOR WALLS AND CEILINGS ARE PROHIBITED. ; MILCOR, PHILIP LUCK, OR EQUAL. SEE SPECIFICATIONS FOR DUCT MOUNTED ACCESS DOOR REQUIREMENTS.

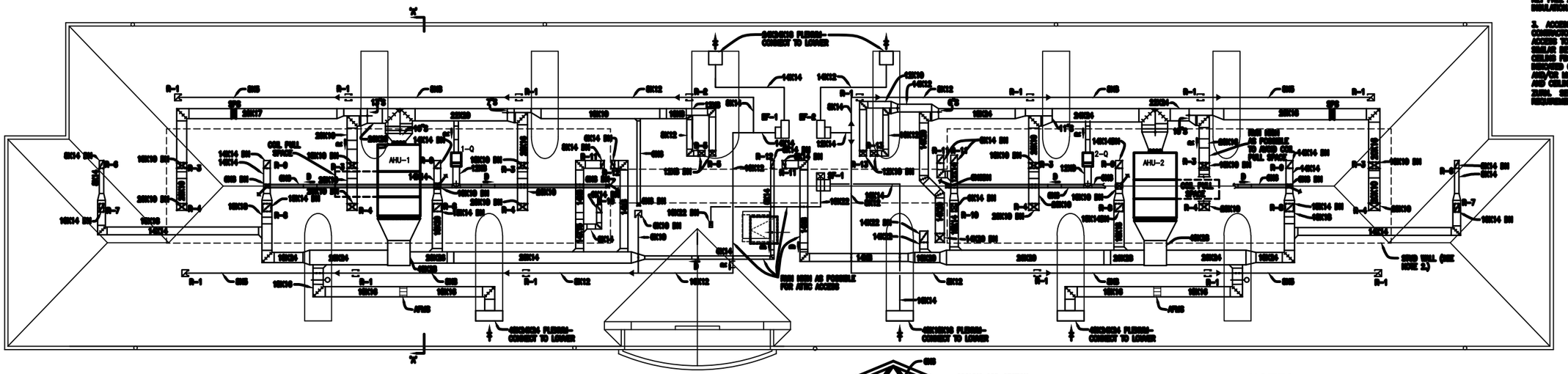

ATTIC HVAC PLAN - DUCTWORK

SCALE: 1/8"=1'-0"

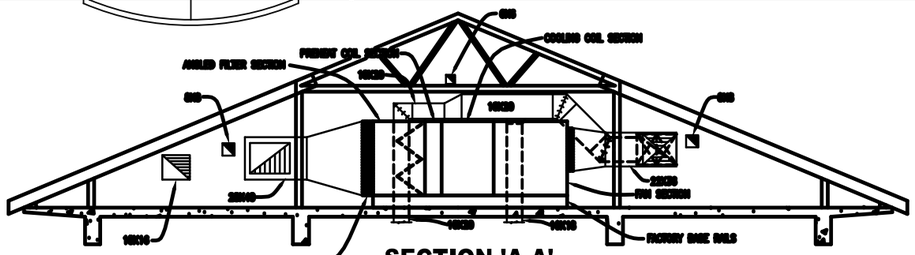

SECTION 'A-A'

SCALE: 1/4"=1'-0"

NOTES:

1. DUCTWORK INSTALLED IN ATTIC SHALL BE ROUTED TO ALLOW SUFFICIENT ACCESS FOR ALL AREAS REQUIRING MAINTENANCE.
2. COORDINATE WITH GENERAL CONTRACTOR FOR ALL REQUIRED OPENINGS IN NEW 2HR WALLS PRIOR TO 2HR WALL CONSTRUCTION. OPENINGS ARE TO BE LAID OUT AND BUILT-IN.
3. PROVIDE SUFFICIENT STRAIGHT DUCT LENGTHS UPSTREAM AND DOWNSTREAM OF AIR FLOW MEASURING STATIONS TO MEET AABC REQUIREMENTS RECOMMENDED.
4. MECHANICAL CONTRACTOR SHALL INSTALL DUCT MOUNTED SMOKE DETECTORS FURNISHED BY ELECTRICAL CONTRACTOR.

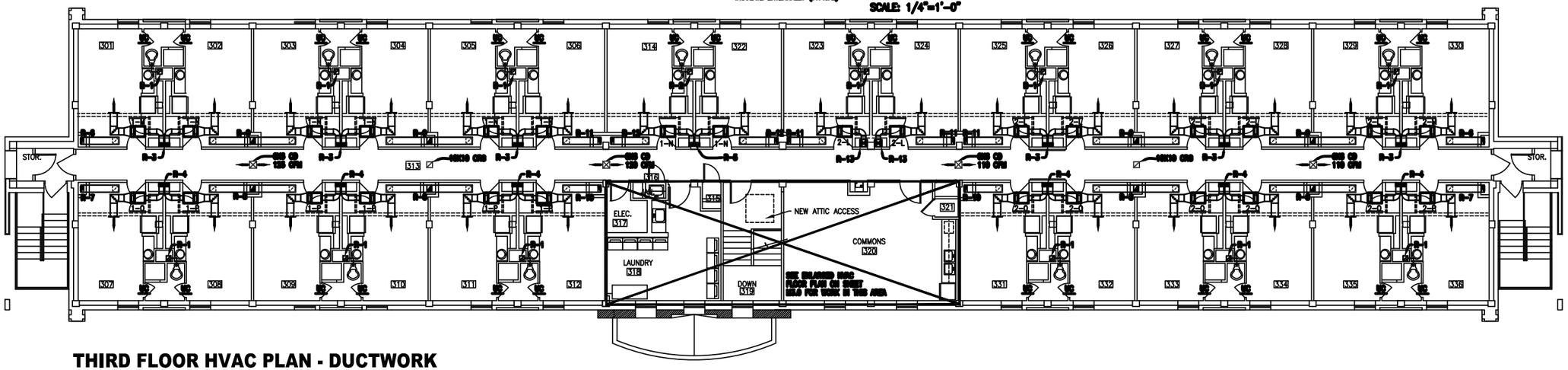

THIRD FLOOR HVAC PLAN - DUCTWORK

SCALE: 1/8"=1'-0"

SCIENTIFIC ENGINEERING, INC. ALABAMA REGISTERED No. 14254 PROFESSIONAL ENGINEER JOHN ALLEN GUNN

DATE	REVISION NO. & DESCRIPTION	BY

PROJECT TITLE:

REPAIR SOS BLDG. 1432
PNQS 95-1057
MAFB, AL

PROJECT NO.: PNQS 95-1057

DRAWING TITLE:

THIRD FLOOR AND ATTIC HVAC PLANS - DUCTWORK

DRAWN BY:	DESIGNED BY:
CEL/MRS	PWH
DATE:	SCALE:
OCT. 1, 1998	1/8" = 1'-0"
REF. SHEET:	SHEET:
M2.3	29 OF 48

DRAWING NUMBER: M01432-9801

1:1
R:\Indesign\maxwell\1430\PNQS 16-5245 Renovate 1430 1433 1434\PNQS165244 Renovate ROTC Dorm 1430\8-6-18 DRAWINGS\Mech\M2.3 THIRD FLOOR MECHANICAL PLAN - BLDG 1430.dwg 1/28/2026 9:13:45 AM BREDLOW, SANDRA Y CTR USAF AETC 42 CES/CENMP

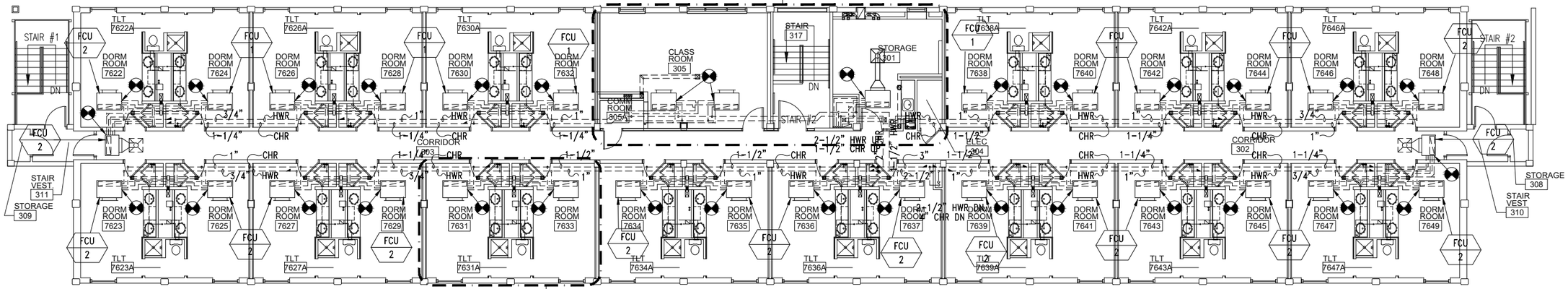

3 M2.3

2 M2.3

1 M2.3 THIRD FLOOR MECHANICAL PLAN – BLDG 1430
1/8" = 1'-0"

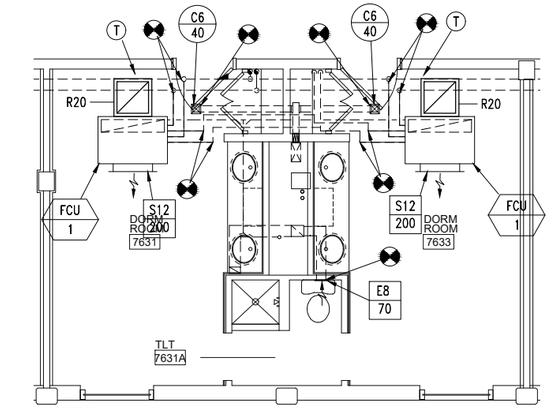

NOTES:

1. IF FCU-2 IS USED IN DORM ROOM, PROVIDE S18 GRILLE AT 400 CFM.
2. FCU LOCATION SHOWN IS DIAGRAMMATIC FOR CLARITY. FCU SHALL BE INSTALLED ABOVE LAY-IN CEILING IN BULKHEAD IN SAME LOCATION AS PREVIOUS FCU. COORDINATE WITH ARCH. RCP.

2 M2.3 M2.3 TYPICAL DORM ROOM PLAN – THIRD FLOOR
1/4" = 1'-0"

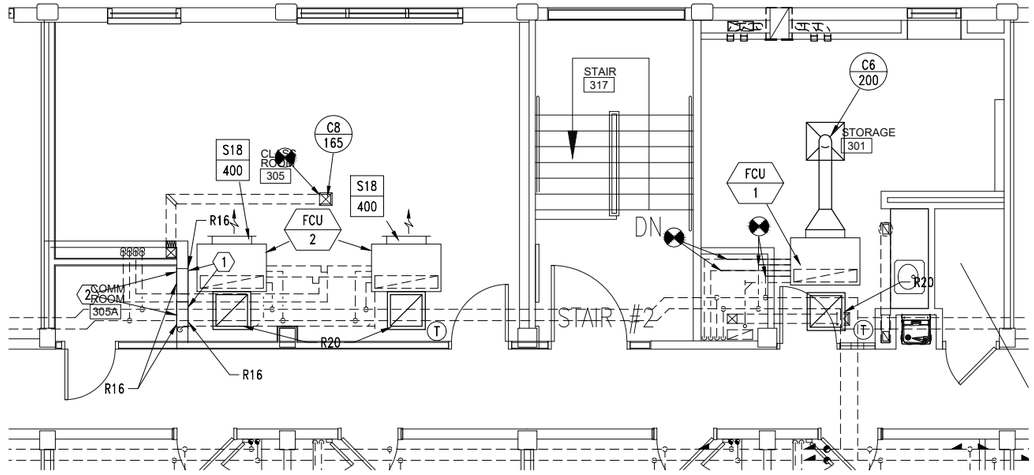

3 M2.3 M2.3 LARGE SCALE MECHANICAL PLAN – ROOM 305
1/4" = 1'-0"

SHEET NOTES:

1. INSTALL INSULATION ON ALL NEW AND EXISTING CHILLED WATER PIPING. FIELD VERIFY EXISTING PIPE SIZES. INSULATION SHALL BE PER SPECIFICATIONS.
2. REFER TO B / M0.4 FOR FCU PIPING CONNECTION DETAIL.
3. CONNECT NEW FCU'S TO EXISTING CONDENSATE DRAIN PIPING.
4. RETURN GRILLES SERVING FAN COIL UNITS SHALL BE INSTALLED IN CEILING GRID UNDERNEATH UNITS. NO DUCT CONNECTION SHALL BE EXTENDED FROM GRILLE TO FCU, AND AIR SHALL BE ABLE TO PASS FREELY FROM THE ROOM INTO THE FCU AIR INTAKE.

KEYED NOTES

(1) INSTALL GRILLE IN WALL 6" BELOW CEILING WITH BLADES ANGLED UPWARD.

(2) INSTALL GRILLE IN WALL WITH BLADES ANGLED UPWARD.

SCALE: 1/4" = 1'-0"
0 2' 4' 8'

SCALE: 1/8" = 1'-0"
0 4' 8' 16'

Symbol	Description	Date	Approved
1	06AUG2018 CHANGES	06AUG2018	RJ

Revisions

MAXWELL AIR FORCE BASE
42 CES/CEN
MAXWELL AFB, ALABAMA 36112

PNQS 16-5244

Designed By:
Drawn By: JKN
Checked By: WDS
Reviewed By:

Date: 5 JANUARY 2018
Scale: AS NOTED
Drawing Sheet Filer:
Drawing Folder: 1430-5244

RENOVATION ROTC
BLDG 1430
MAXWELL AFB, AL

THIRD FLOOR MECHANICAL PLAN – BLDG 1430

Sheet Reference Number:
BI.1/M2.3