Training and Readiness Accelerator (TReX)

Request For Information (RFI)

In support of

Airborne Direction Finding (DF) Systems

for the Joint Threat Warning System (JTWS)

Classification Code:
59 -- Electrical and electronic equipment components

NAICS Code:
335999 -- All Other Miscellaneous Electrical Equipment and Component Manufacturing

Synopsis:

1. This request for information (RFI) is for market research and planning purposes only and does not constitute a solicitation for proposals. Responses to this notice are not offers and cannot be accepted by the Government to form a binding contract. The purpose of this RFI is to identify sources capable of providing an airborne Direction Finding (DF) system. The information provided in this RFI is subject to change and is not binding on the Government. All submissions become Government property and will not be returned. The Government will not pay for information received in response to this RFI.

   The Government does not intend to make an award on the basis of this request for information or to pay for the information submitted in response to this RFI. However, the government intends to leverage the Other Transaction Authority (OTA) under 10 U.S.C. §4022 [Prototype Other Transactions] or a Commercial Solutions Opening (CSO) under 10 U.S.C. 3458 to conduct the JTWS Air DF project effort.

2. **Mission Context & Problem Statement**
   United States Special Operations Command (USSOCOM) has identified a critical need to enhance the situational awareness and force protection of its operators. Special Operations Forces (SOF) require an airborne Direction Finding (DF) system to rapidly and accurately geolocate threat emitters in actively contested radio frequency (RF) environments.

   Current Architecture & Limitations
   The government has identified a specific aircraft to be equipped with this capability, establishing a baseline of physical and integration constraints. The five primary locations for antenna consideration are indicated in Figure 1.

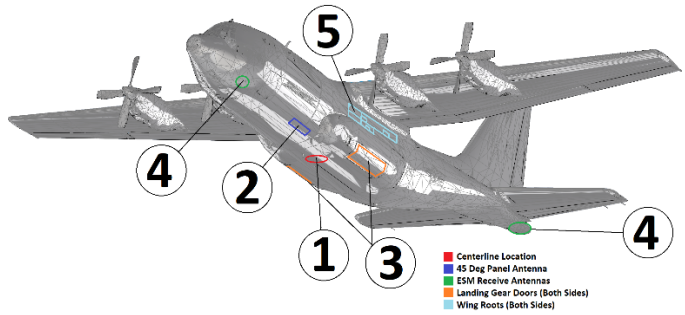

Figure 1 - Five candidate antenna locations

Currently, the platform utilizes specific existing infrastructure, which includes several established antenna locations and a primary location for the system chassis:

- Centerline location: An empty cavity on the bottom of the aircraft where vendor provided equipment can be installed. The cavity is a 19” round volume, 2” inches thick, with a 12”x16”x4” rectangular volume that protrudes inboard to the aircraft.

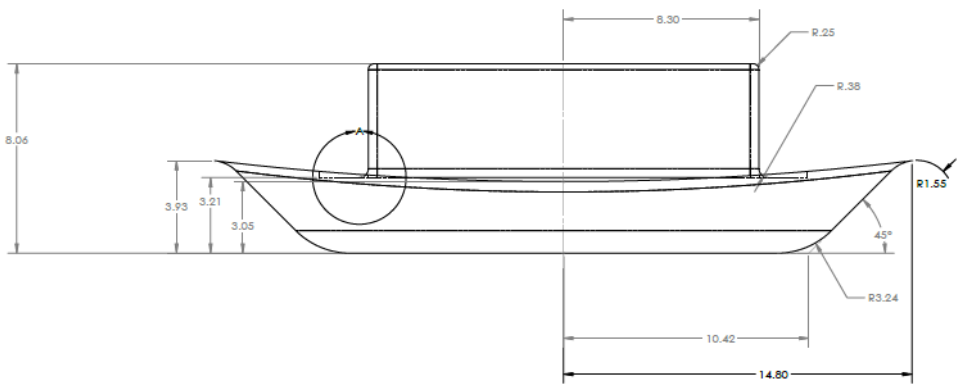

Figure 2 - Centerline location, side view with dimensions

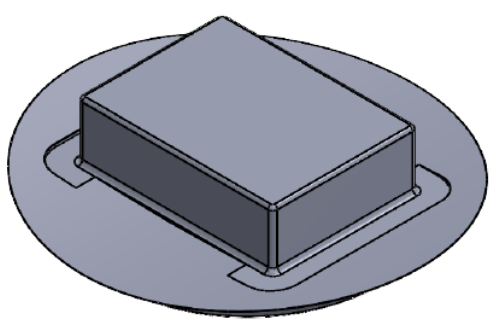

Figure 3 - Centerline location, isometric view

- Existing antennas: Some antennas are currently installed and cabled. The vendor has the option to utilize these existing antennas. However, modification of these antennas will not be allowed as part of this effort.

- Panel antenna: Mounted on the bottom of the aircraft, left of centerline, facing 45 degrees downward. Provides two RF connections (L and S band) with about 8 dBi of gain.
- ESM receive antennas: Spread along the bottom half of the aircraft (2 FWD / 2 AFT / 1 CENTER). Pre-amps are used for each. Antennas provide coverage in three bands within 500MHz – 18GHz.

- Primary location: Place inside the aircraft where cables from the locations mentioned above connect. The vendor provided solution can include a chassis at this location, consume 24 VDC power, and perform DF computation.

However, current systems operating within this baseline physical architecture face significant operational challenges. They are limited by physical Size, Weight, and Power (SWaP) constraints, insufficient geolocation accuracy at the tactical edge, and limited frequency coverage.

Desired End-State & Future Architecture
This RFI seeks innovative solutions from industry to transition from the current limitations to a highly capable, agile architecture. The ideal future system will provide operators with a DF capability that is significantly lighter, consumes less power, covers a frequency range of HF to SHF, and provides a higher degree of accuracy than currently available systems.

To achieve this new standard, vendors must detail how their proposed systems will physically integrate into the platform to maximize performance. While leveraging the current infrastructure is an option, we strongly encourage solutions that incorporate alternative placements. To foster innovation, all viable locations will be considered, including potential, currently unutilized, locations such as:

- Landing gear doors
- Wing roots

The Government's ultimate interest is in mature, reliable, and easily integrated technologies that can optimally utilize this platform's physical footprint and be rapidly fielded to the operator.

3. Interested parties are requested to provide a response that addresses the following areas. Please be as specific as possible.

   3.1. **Antenna Performance & Frequency:** Describe the antenna type and its effective frequency range. Provide graphs illustrating antenna gain, Voltage Standing Wave Ratio (VSWR), and DF accuracy across the entire specified frequency range. Vendors should highlight performance characteristics at key frequencies of interest if known.

   3.2. **SWaP-C Characteristics:** Describe the solution's complete Size, Weight, Power, and Cooling (SWaP-C) characteristics. Provide specific dimensions for all components (e.g., antenna, processor, cables), the total weight of the system & all components, and both peak and average power consumption values.

   3.3. **Environmental:** The system should be ruggedized to operate in a variety of environments. At a minimum the system should be tested to comply with MIL-STD. List all MIL-STDs to which the system has been tested.

3.4. **Interfaces:** The system needs to interface with a variety of software defined radios. At a minimum the system should have an Ethernet port, and an RF port for receiving IF frequency data.

3.5. **Technology & Manufacturing Readiness Level (TRL/MRL):** What is the current TRL and MRL of your proposed solution? Provide evidence to support your claim.

3.6. **System Integration:** The Department of Defense encourages a Modular Open Systems Approach (MOSA) per https://ac.cto.mil/mosa/. For this project, standards have some relevance, although none of these will be adopted in its entirety. Industry is asked to identify appropriate elements of these standards, or others not listed, that would accomplish any of the MOSA goals.

3.7. **Supply Chain & Origin:** Identify if the proposed solution is Commercial Off-the-Shelf (COTS), Government Off-the-Shelf (GOTS), or a modified item. Describe your company's supply chain risk management approach for critical components.

3.8. **Rough Order of Magnitude (ROM) Cost:** Provide a non-binding ROM cost for your solution. This ROM should include price points for the antenna, processor, and any required software at quantities of 10, 50, and 100 units. Please also include estimated costs for new equipment training and a standard one-year warranty/support package.

3.9. **Production & Delivery:** Describe your company's production capability, including estimated lead times for initial and full-rate production. Confirm your ability to scale manufacturing to meet the delivery of 10, 50, and 100 units, and describe your approach to synchronizing delivery schedules with government fiscal year funding and deadlines.

4. This effort is expected to be UNCLASSIFIED.

Review of this information is being performed by NIWC Atlantic, Code 55340, which aims to conduct objective comparative assessments and validations of commercial products to determine if the solution meets the Government's requirements.

All information received will be treated as public knowledge and may be used in NIWC Atlantic documentation; therefore, vendors should not submit proprietary information in response to this RFI. The submitted information will be evaluated for inclusion in NIWC Atlantic projects. If a NIWC Atlantic project requiring this type of equipment is executed, the equipment selection will be based upon a number of factors, including responder surveys and focus group inputs. Vendors may be contacted following submission for more detailed product information.

This RFI is for information gathering and planning purposes only, and should not be construed as an RFP or solicitation of an offer. The Government does not intend to award a contract on the basis of this RFI or otherwise pay for the information solicited. Submission of vendor information constitutes consent to publication of that information in NIWC Atlantic documentation. E-mail your questions to adam.w.christopher4.civ@us.navy.mil. Submissions are due by noon (EDT) on July 17, 2026 and shall be submitted via e-mail to adam.w.christopher4.civ@us.navy.mil.