CABLE REPLACEMENT
HOUMA-TERREBONNE AIRPORT
HOUMA, LOUISIANA

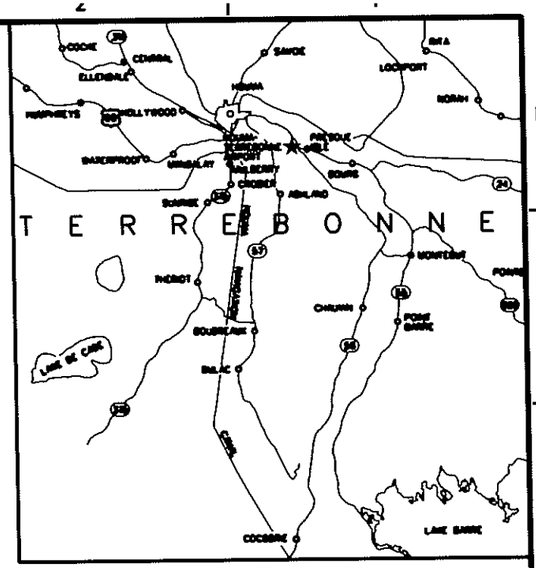

VICINITY MAP
NOT TO SCALE

INDEX OF DRAWINGS	
DRAWING NUMBER	
	GENERAL
HUM-D-MALSR18-G001	TITLE SHEET AND INDEX OF DRAWINGS
HUM-D-MALSR18-G002	GENERAL LAYOUT PLAN
	CIVIL
HUM-D-MALSR18-C001	MALSR PLAN AND PROFILE
HUM-D-MALSR18-C002	SITE SPECIFIC MALSR DETAILS
HUM-D-MALSR18-C003	MALSR RUNWAY 18 WARNING SIGN
HUM-D-MALSR18-C004	MALSR RUNWAY 18 WIRING DIAGRAM
	ELECTRICAL
HUM-D-MALSR18-E001	ELECTRICAL DETAILS
HUM-D-MALSR18-E002	POWER/GROUNDING PLAN
HUM-D-MALSR18-E003	ELECTRICAL FLOOR PLAN, GROUNDING AND DETAIL
	REAL ESTATE
HUM-D-MALSR18-R001	ALP AIRPORT PROPERTY (REAL ESTATE DRAWING)
	STANDARD REFERENCE DRAWINGS
SW-C-7450	MALS STORAGE BUILDING PLAN AND ELEVATIONS
D-6292-2	FA-11500 MALSR WITH RMS ELECTRICAL DETAILS NO.1
D-6292-3	FA-11500 MALSR WITH RMS ELECTRICAL DETAILS NO.2
D-6292-4	FA-11500 MALSR WITH RMS ELECTRICAL DETAILS NO.3
D-6292-5	FA-11500 MALSR WITH RMS POWER AND CONTROL STATION EQUIPMENT EXTERIOR MOUNTING DETAILS
D-6292-6	FA-11500 MALSR WITH RMS DISTRIBUTION PANEL, TRANSFORMER ASSEMBLY MOUNTING DETAILS
D-6292-7	FA-11500 MALSR WITH RMS THRESHOLD LIGHT DETAILS
D-6292-9	FA-11500 MALSR WITH RMS UP TO 8'-0" MOUNTING HEIGHT FRANGIBLE LIGHT BAR
SWSD-GROUNDING-E02-2	GROUNDING STANDARDS, TYPICAL CONNECTIONS
SWSD-GROUNDING-E03-1	GROUNDING STANDARDS, POWER SERVICE DETAILS
SWSD-NAVAIDS-C04-01	NAVAIDS CONSTRUCTION STANDARDS, MANHOLES, PULL BOXES, AND DUCT BANKS
SWSD-NAVAIDS-E01	NAVAIDS CONSTRUCTION STANDARDS, ELECTRICAL DETAILS
D-6213-4	MALSR WITH THRESHOLD LIGHTS AND LOW IMPACT RESISTANT STRUCTURE POWER AND CONTROL STATION EQUIPMENT MOUNTING DETAILS
D-6213-5	MALSR WITH THRESHOLD LIGHTS AND LOW IMPACT RESISTANT STRUCTURE THRESHOLD LIGHT DETAILS
D-6213-6	MALSR WITH THRESHOLD LIGHTS AND LOW IMPACT RESISTANT STRUCTURE SEMI-FLUSH THRESHOLD LIGHTS, DETAILS FOR RUNWAY OVERRUN INSTALLATION
D-6213-7	MALSR WITH THRESHOLD LIGHTS AND LOW IMPACT RESISTANT STRUCTURE UP TO 8'-0" MOUNTING HEIGHT FRANGIBLE LIGHT BAR
D-6213-8	MALSR WITH THRESHOLD LIGHTS AND LOW IMPACT RESISTANT STRUCTURE 6'-0" TO 40'-0" MOUNTING HEIGHT STEADY-BURNING LIGHT DETAILS
D-6213-9	MALSR WITH THRESHOLD LIGHTS AND LOW IMPACT RESISTANT STRUCTURE 6'-0" TO 40'-0" MOUNTING HEIGHT FLASHER LIGHT INSTALLATION DISPLAY
D-6213-10	MALSR WITH THRESHOLD LIGHTS AND LOW IMPACT RESISTANT STRUCTURE 6'-0" TO 40'-0" MOUNTING HEIGHT LIR TOWER FOUNDATION DETAILS
D-6213-11	MALSR WITH THRESHOLD LIGHTS AND LOW IMPACT RESISTANT STRUCTURE 6'-0" TO 40'-0" MOUNTING HEIGHT MISCELLANEOUS DETAILS
D-6213-12	MALSR WITH THRESHOLD LIGHTS AND LOW IMPACT RESISTANT STRUCTURE 6'-0" TO 40'-0" MOUNTING HEIGHT UNDERGROUND CONDUIT SYSTEM
D-6213-13	MALSR WITH THRESHOLD LIGHTS AND LOW IMPACT RESISTANT STRUCTURE 6'-0" TO 40'-0" MOUNTING HEIGHT STRUCTURAL ERECTION AND DETAILS
D-6213-14	MALSR WITH THRESHOLD LIGHTS AND LOW IMPACT RESISTANT STRUCTURE 6'-0" TO 40'-0" MOUNTING HEIGHT FRANGIBLE T-BAR AND RAIL FLASHER MOUNTING HEAD
D-6213-15	MALSR WITH THRESHOLD LIGHTS AND LOW IMPACT RESISTANT STRUCTURE 40'-0" TO 128'-0" MOUNTING HEIGHT LIR WIRING

SITE DATA:

OWNER: HOUMA-TERREBONNE AIRPORT COMMISSION
ADDRESS: 220 CLENDENNING ROAD
HOUMA, LA 70363

PHONE: 985-872-4646 AIRPORT MANAGER: MR. EARL J. HICKS, A.A.E.
LAT: 29-34-04 974 N.
LONG: 090-39-38 420 W.
ELEV: 9 FT

FREQUENCY: NOT REQUIRED
POWER SERVICE: ENERGY CONTACT: MR. EARL HICKS, AIRPORT MANAGER
OR 1-800-368-3749
CONTROL: A/G/ RADIO CONTROL
FAA CONTRACT TOWER MANAGER MR. LLOYD SISSON, 985-879-4309
AFSFU FAA HUM SSU 129 TOWER ROAD HOUMA, LA. 70363
ACADIAN AMBULANCE AND AIR MED 1-800-259-2222
LOUISIANA ONE CALL (DOTTIE) 1-800-272-3020
BELL SOUTH 1-866-620-6000
CITY OF HOUMA - GAS 985-873-6755

REV	APPROVED DATE	DESCRIPTION	JCN	REDLINE DATE	APVD

DEPARTMENT OF TRANSPORTATION
FEDERAL AVIATION ADMINISTRATION
CENTRAL SERVICE AREA — FORT WORTH, TX

MALSR
CABLE REPLACEMENT RUNWAY 18
TITLE SHEET AND INDEX OF DRAWINGS

HOUMA — HOUMA-TERREBONNE AIRPORT — LA

REVIEWED BY	SUBMITTED BY	APPROVED BY
	$WATERMARK$	$WATERMARK$
PROJECT ENGINEER, AHI-880		PLATFORM MANAGER, AHI-880
DESIGNED GBT	ISSUED BY WYNNE OPERATIONS ENGINEERING SERVICES	DATE 10/13/2006 JCN 21B37
DRAWN BLH		DRAWING NO HUM-D-MALSR18-G001 REV
CHECKED		

THIS DRAWING PRODUCED ON THE ASW RO REGION MICROSTATION SYS

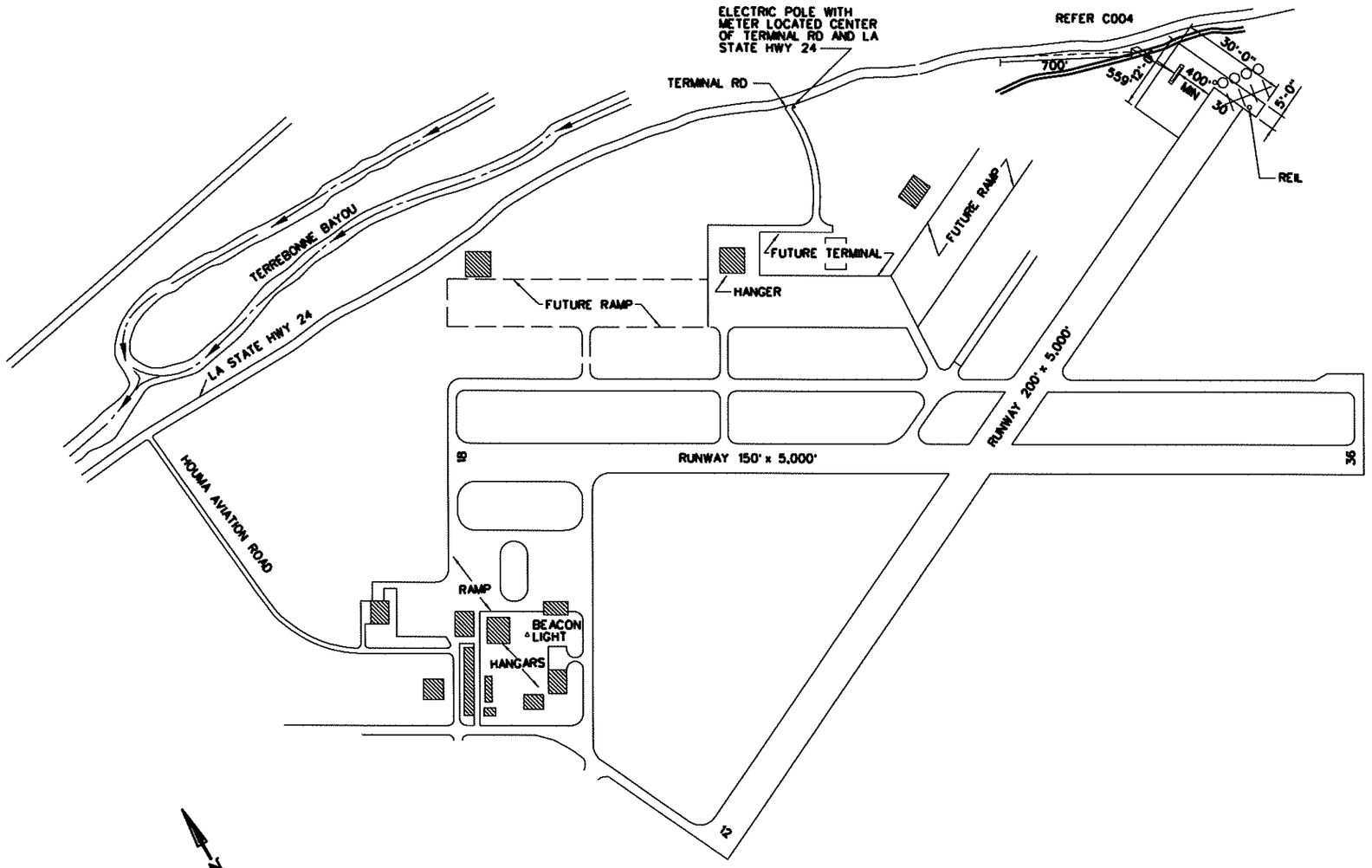

NOTES:

1. ALL CABLES ROUTES REQUIRE 10 FOOT EASEMENT.
2. CONTRACTOR SHALL CONTACT LOCAL UTILITY COMPANIES AND GOVERNMENTAL AGENCIES BEFORE PROCEEDING WITH ANY CONSTRUCTION.
3. CONTRACTOR SHALL VERIFY POSITION OF THE POWER CABLE TO THE MALSR TOWER.

AIRPORT PLAN
NOT TO SCALE

REV	APPROVED DATE	DESCRIPTION	JCN	REDLINE DATE	APVD

DEPARTMENT OF TRANSPORTATION
FEDERAL AVIATION ADMINISTRATION
CENTRAL SERVICE AREA — FORT WORTH, TX

MALSR

GENERAL SITE LAYOUT PLAN

HOUMA — HOUMA-TERREBONNE AIRPORT — LA

REVIEWED BY	SUBMITTED BY $WATERMARK$	APPROVED BY $WATERMARK$
	PROJECT ENGINEER, AMI-680	PLATFORM MANAGER, AMI-680
	DESIGNED GBT	ISSUED BY TECHNICAL OPERATIONS ENGINEERING SERVICES
	DRAWN B.H	DATE 10/13/2006 JCN 211857
	CHECKED	DRAWING NO HUM-D-MALSR18-C002 REV

THIS DRAWING PRODUCED ON THE ASW RO REGION MICROSTATION SYSTEM

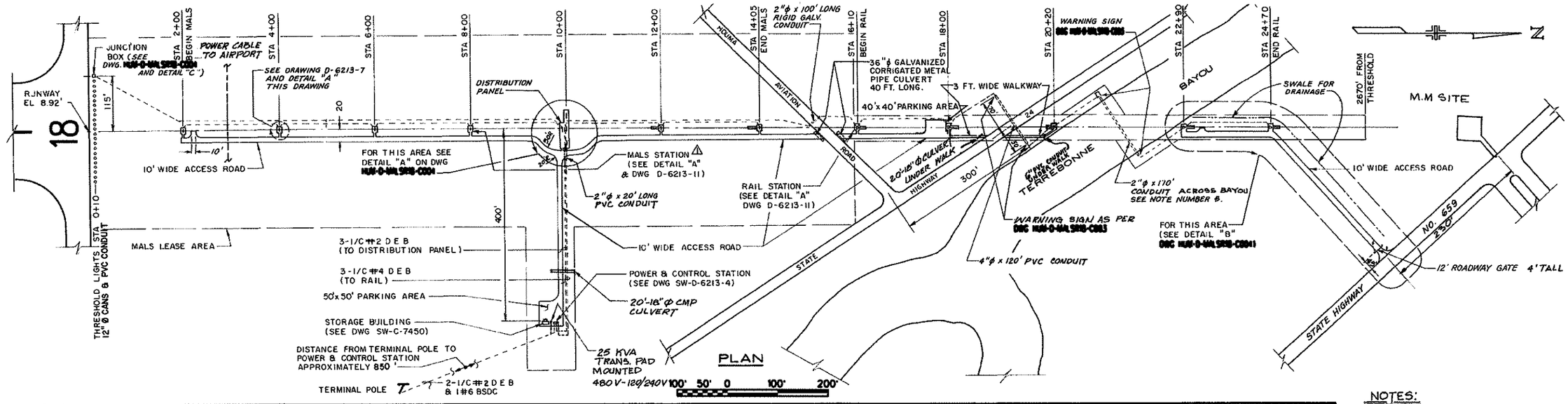

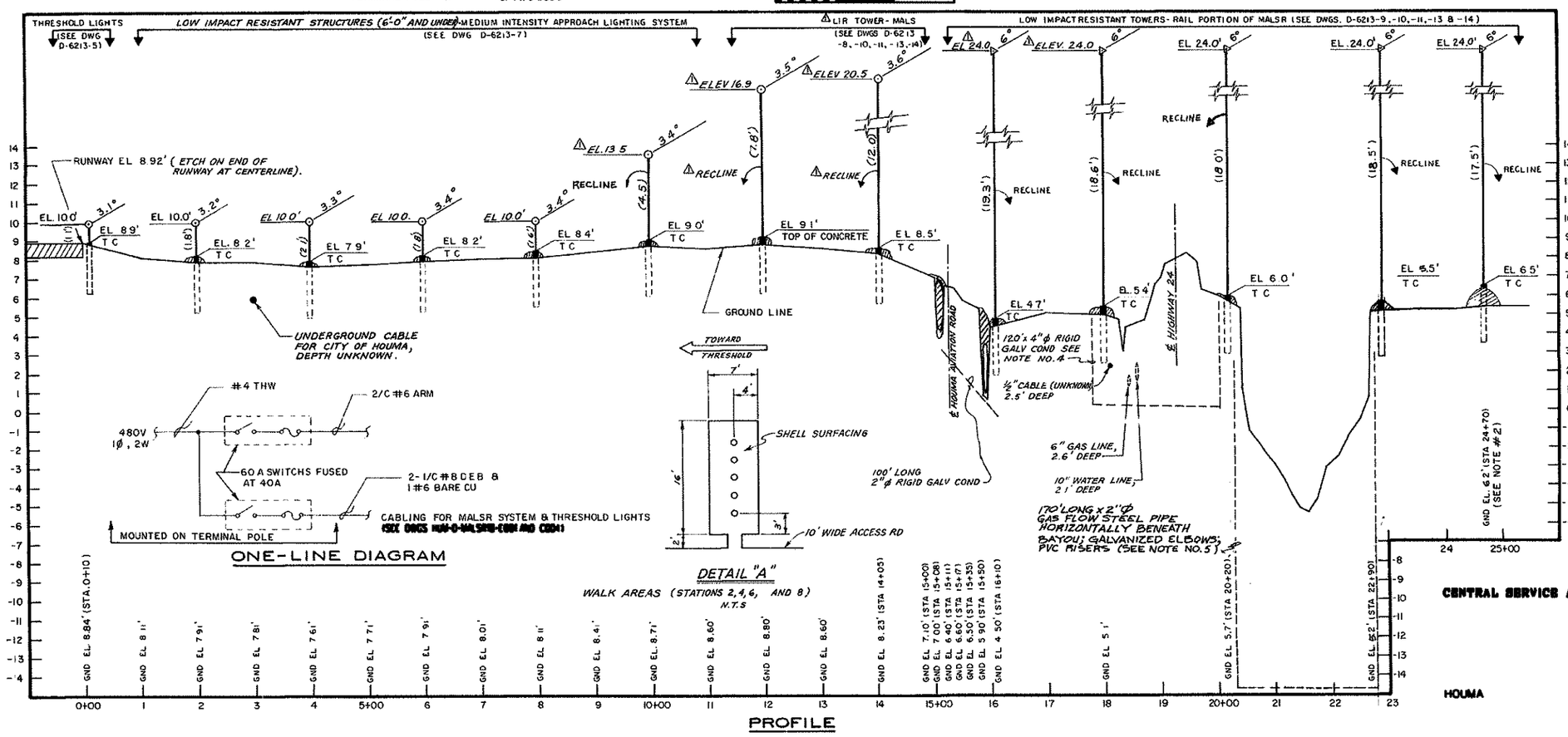

NOTES:

1. ROADS, TURNAROUNDS, AND PARK AREAS ARE CONSTRUCTED AS PER FIG NO.1, DWG. SW-D-2089, BY INSTALLING A 6" COMPACTED LAYER OF CLAM SHELL SURFACING ATOP A 6" COMPACTED LAYER OF SAND FILL SHOULDERS SLOPE 4 HORIZONAL TO 1 VERTICAL.
2. THE WALK AREAS ARE CONSTRUCTED BY FIRST GRUBBING THE TOP 2" AND THEN INSTALLING A 4" LOOSE LAYER OF CLAM SHELL SURFACING
3. SOIL STERILANT (HYVAR X-L) WAS NOT APPLIED WITH IN 100 FEET OF BAYOU TERREBONNE.
4. THE CONDUIT UNDER STATE HIGHWAY 24, THE TOP OF CONDUIT HAS 4 FEET COVER BELOW BOTTOM OF DITCH. 6' DEEP ON BAYOU SIDE.
5. THE TOP OF CONDUIT IS BURIED AT AN ELEVATION OF - 14.8 NGVD (MSL) ACROSS A BOTTOM WIDTH OF 80 FEET IN THE CENTER OF THE CHANNEL. ACROSS THE ENTIRE CHANNEL A MINIMUM OF 8 FEET OF COVER IS MAINTAINED.

CENTRAL SERVICE AREA — FORT WORTH, TX

MALSR

PLAN AND PROFILE

HOUMA — HOUMA-TERREBONNE AIRPORT — LA

ISSUED FOR CONSTRUCTION

PROJECT ENGINEER, AN-580 — PLATFORM MANAGER, AN-580

GW1 TECHNICAL OPERATIONS ENGINEERING SERVICES — 10/13/2006 — 211837

HUM-D-MALSR18-C001

CDW: HUM-D-MALSR18-C001.dgn

THIS DRAWING PRODUCED ON THE ASW RO REGION MICROSTATION SYSTEM

SW-D-10049-1 ACTIVE

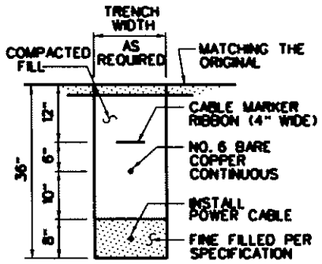

1 C002 **MALSR TRENCH DETAIL**
NOT TO SCALE

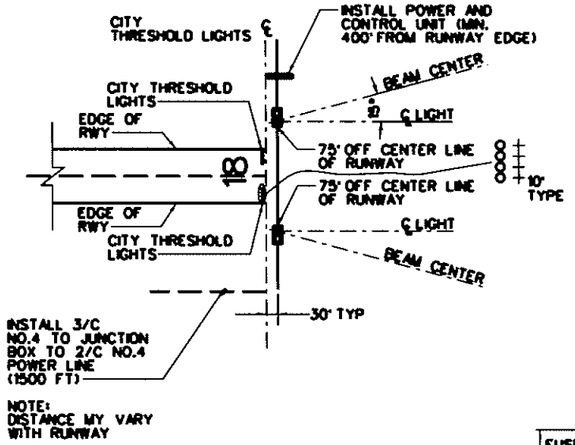

2 C002 **RUNWAY PLAN**
NOT TO SCALE

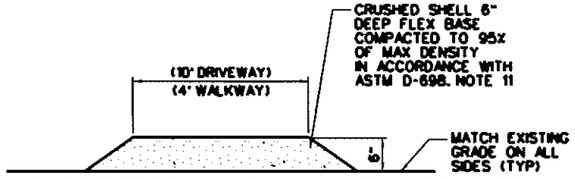

NOTE: CONTRACTOR SHALL PLACE A MINIMUM OF 6" OF COMPACTED THICKNESS OF SURFACE COURSE SHELL FOR WALKWAYS AND DRIVES. ALL SURFACES SHALL BE ROLLER COMPACTED.

3 C002 **WALKWAY AND DRIVE SECTION VIEW**
NOT TO SCALE

NOTES:

1. CONDUIT LOCATIONS DETERMINED IN THE FIELD, THE LOCATIONS ALLOW EASY ACCESS TO THE COMPONENTS IN THE CABINETS. WHEN POSSIBLE, CONDUITS ENTERED THROUGH THE BOTTOM OF THE CABINETS, A WATERTIGHT SEALANT WAS APPLIED AT CONDUIT-TO-CABINET FITTINGS.
2. INSTALLED A NO.6 BSDC WIRE FROM THE GROUNDING BUSHING TO A GROUND LUG IN EACH CABINET. INSTALLED A GROUNDING BUSHING AT BOTH ENDS OF ALL CABINETS.
3. CABLE INSTALLED IN ACCORDANCE WITH DIVISIONS 2 AND 16.
4. ALL ELECTRICAL WORK CONFORMED WITH THE NATIONAL ELECTRIC CODE.
5. ALL UNISTRUTS, BOLTS, NUTS AND WASHERS ARE HOT DIPPED GALVANIZED RIGID STEEL.
6. COAT THE FLANGE SURFACE ON THE CONCRETE WITH AN ASPHALTIC COMPOUND FOR METAL PROTECTION.
7. ALL RSG, IN CONCRETE, ON GRADE OR UNDERGROUND ARE FIELD WRAPPED.
8. CONTRACTOR SHALL INSTALL TWO DISCONNECT SWITCHES, AT THE TRANSFORMERS AND ON THE POWER AND CONTROL UNIT RACK.
9. ADD ONE 12" DIA. 10' PILE ON ℄ OF EACH AMING PADS CONCRETE FOUNDATION 4" BELOW ELECTRICAL CONDUIT. PILES MUST BE TREATED WOOD NOT CREOSOTE, CREOSOTE WILL BE BE ALLOWED. TOTAL OF (2) PILES.
10. ADD TWO 12" DIA. 35' PILES ON ℄ OF METER RACK PIERS 4" BELOW ELECTRICAL CONDUIT. PILES MUST BE TREATED WOOD NOT CREOSOTE, CREOSOTE WILL NOT BE ALLOWED. TOTAL OF (2) PILES.

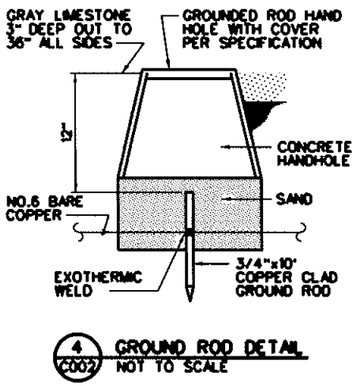

4 C002 **GROUND ROD DETAIL**
NOT TO SCALE

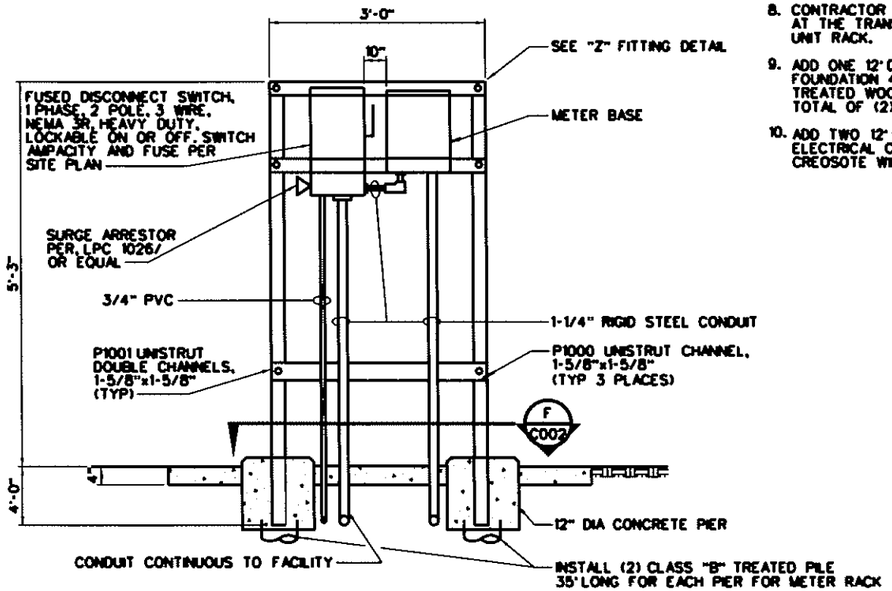

METER RACK ELEVATION
NOT TO SCALE

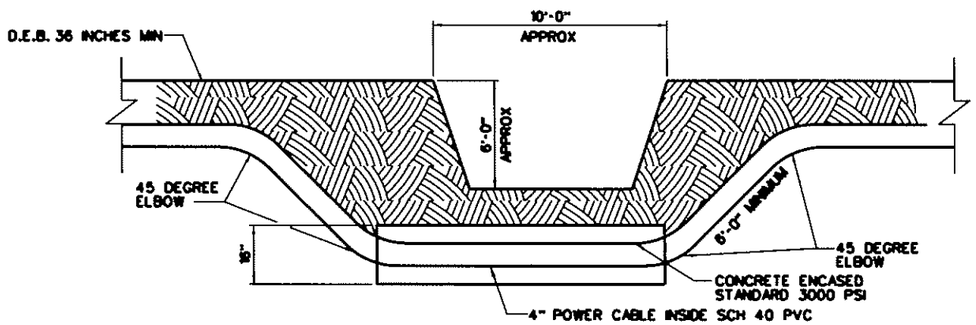

5 C002 **LOW WATER CROSSING**
NOT TO SCALE

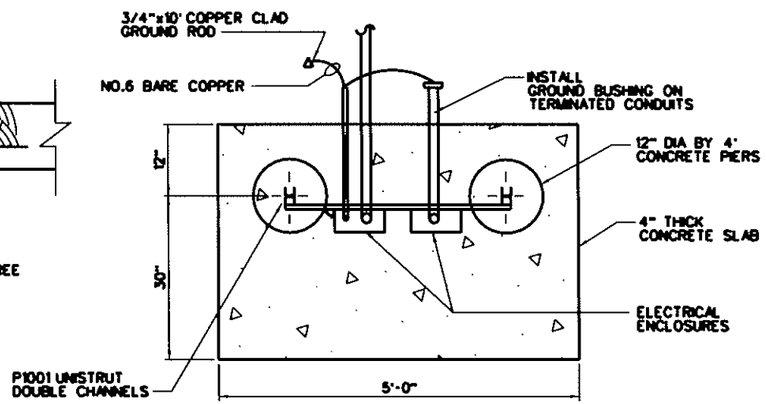

6 C002 **METER RACK DETAIL**
NOT TO SCALE

CENTRAL SERVICE AREA — FORT WORTH, TX

MALSR

SITE SPECIFIC MALSR DETAILS

HOUMA — HOUMA-TERREBONNE AIRPORT — LA

ISSUED FOR CONSTRUCTION

PROJECT ENGINEER, AN-680 — PLATFORM MANAGER, AN-680

691 TECHNICAL OPERATIONS — 10/13/2006 — 211837

SLH ENGINEERING SERVICES — HUM-0-MALSR18-C002

CDH HUM-0-MALSR18-C002.DGN

THIS DRAWING PRODUCED ON THE ASW RO REGION MICROSTATION SYSTEM

ACTIVE

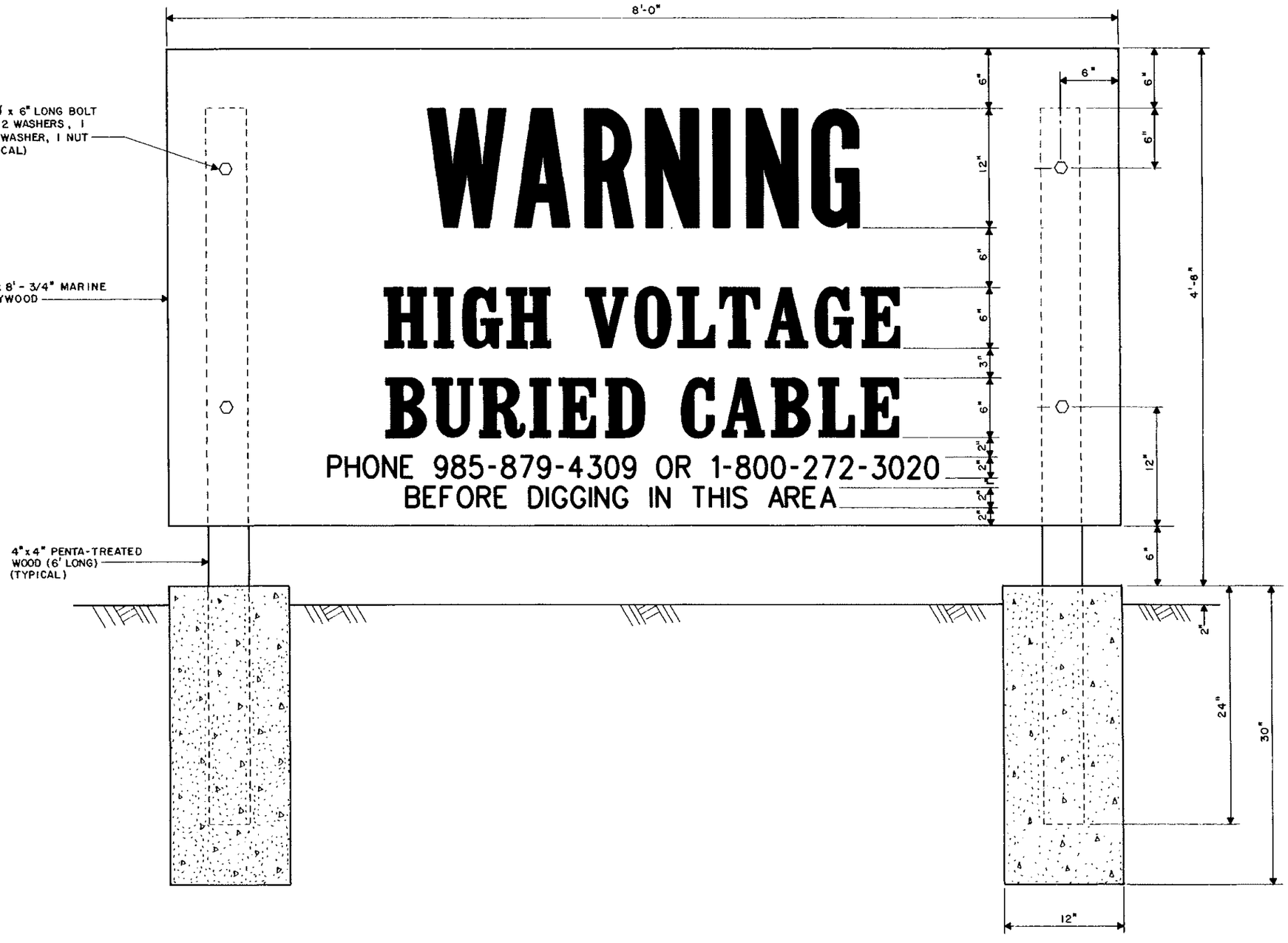

4" 0 4" 8" 12"

SCALE: 3/16" = 1"

NOTES:

1. FACED SIGNS TOWARD ROADS AND BAYOU. LOCATED AS PER DRAWING **HUM-D-MALSR18-C001.**
2. BEFORE PAINTING, CLEANED WOOD SURFACE OF DIRT, OIL AND OTHER FOREIGN SUBSTANCES WITH MINERAL SPIRITS. THE SURFACE SHALL BE COMPLETELY FREE FROM SURFACE MOISTURE AND THE ATMOSPHERIC TEMPERATURE BE MAINTAINED AT A MINIMUM OF 45°F AND A MAXIMUM OF 95°F. PAINT COMPLETELY FREE FROM SURFACE STRAINED AND KEPT AT A UNIFORM CONSISTENCY DURING APPLICATION. THE PRIMER COAT SHALL CONFORM TO FEDERAL SPECIFICATION TT-P-25, PRIMER, PAINT, EXTERIOR (UNDERCOAT FOR WOOD, READY-MIXED, WHITE AND TINTS). THE INTERMEDIATE AND FINISH COAT SHALL BE LUSTERLESS (OR FLAT) WHITE # 37875 AS PER FEDERAL STANDARD NO. 595a EPOXY PAINT. LETTERING TO BE EPOXY LUSTERLESS BLACK # 37038 AS PER FEDERAL STANDARD NO. 595a WITH THE MEETING LINE BETWEEN COLORS BEING STRAIGHT AND SHARPLY DEFINED, WITH NO BLENDING, RUNNING OR GAPS. SUFFICIENT TIME SHALL ELAPSE BETWEEN SUCCESSIVE COATINGS TO PERMIT PROPER DRYING. THE WARNING SIGN SHALL NOT HAVE ANY PAINT FAILURES SUCH AS PEELING, BLISTERING, ALLIGATORING, CRACKING, CHECKING OR CURLING.

CENTRAL SERVICE AREA — FORT WORTH, TX

MALSR

WARNING SIGN

HOUMA — HOUMA-TERREBONNE AIRPORT — LA

PROJECT ENGINEER, AAS-680 — PLATFORM MANAGER, AAS-680

ORT TECHNICAL OPERATIONS — 10/13/2005 — 211837

RLM ENGINEERING SERVICES — HUM-D-MALSR18-C003

ISSUED FOR CONSTRUCTION

COM: HUM-D-MALSR18-C003.dgn

THIS DRAWING PRODUCED ON THE ASW RO REGION MICROSTATION SYSTEM

SW-D-10049-4 ACTIVE

NOTES:

1. JUNCTION BOXES ARE NEMA 3R, 200 AMP, 240 VOLT. THEY HAVE 3 INSULATED BUS BARS AND 1 GROUNDED NEUTRAL BUS BAR. EACH BUS BAR IS CAPABLE OF ACCEPTING #1/0 WIRE. BOX SIZE IS AT LEAST 14" LONG BY 11" WIDE BY 5-1/8" HIGH AND HAS TWO 1-1/2" — 2" CONCENTRIC KNOCKOUTS AND ONE 3/4" KNOCKOUT. THE JUNCTION BOXES ARE HOFFMAN — BULLETIN A-91, CATALOG NUMBER H-893
2. THE JUNCTION BOXES ARE LOCATED AS INDICATED ON THE PLAN & PROFILE DRAWING AND ACCORDING TO DRAWING D-6213-9, SECTION "A-A"

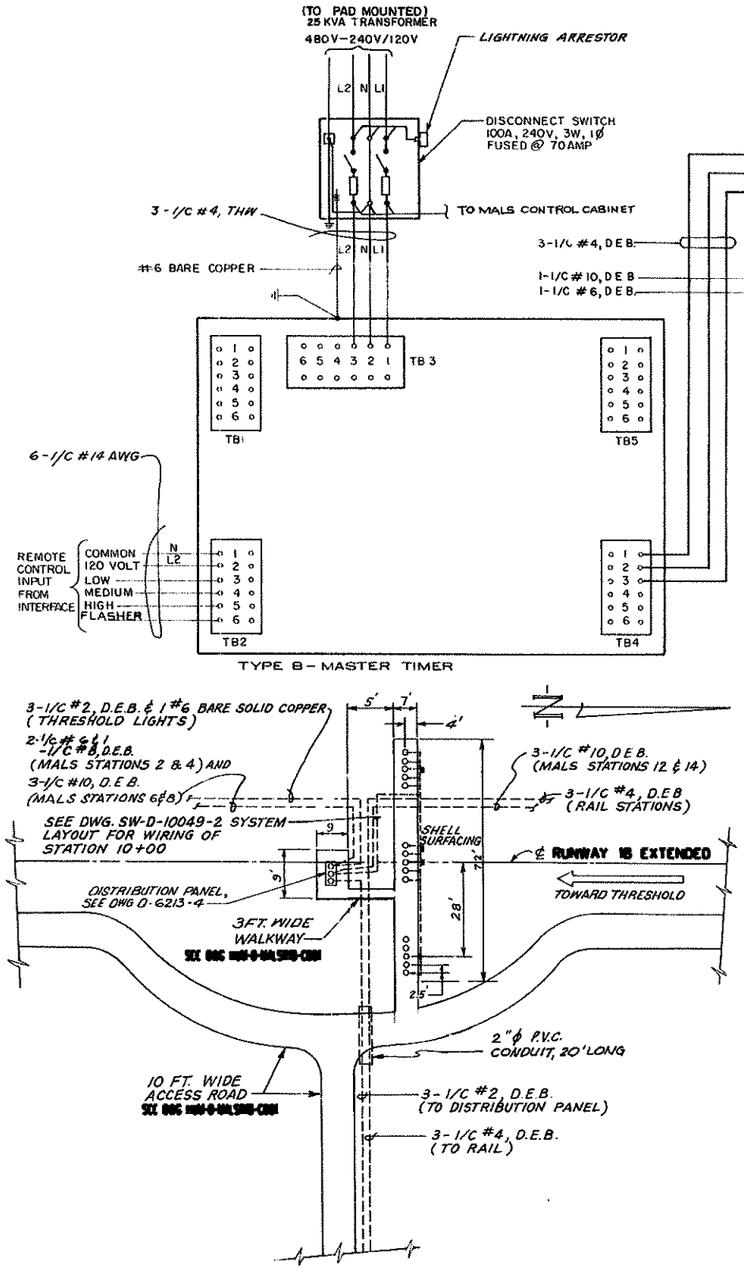

A C004 **DETAIL A - STATION 10+00**
NOT TO SCALE

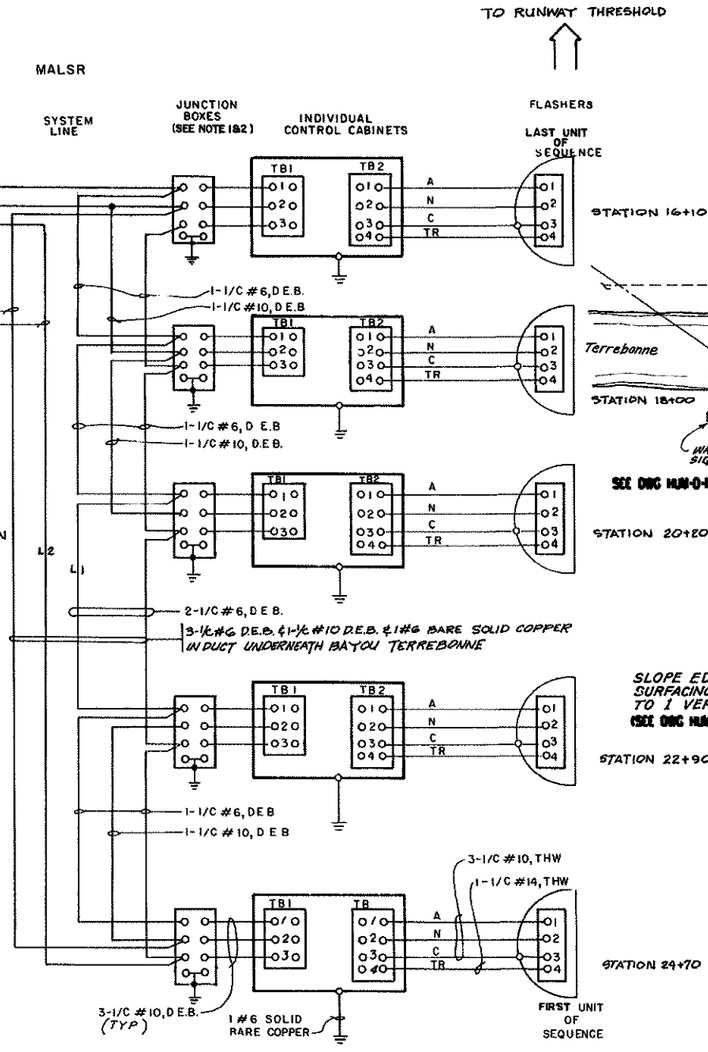

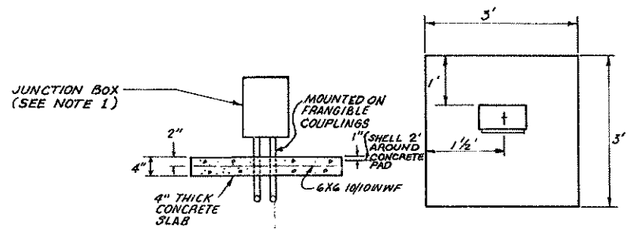

C C004 **DETAIL C - JUNCTION BOX FOR THRESHOLD LIGHTS**
NOT TO SCALE

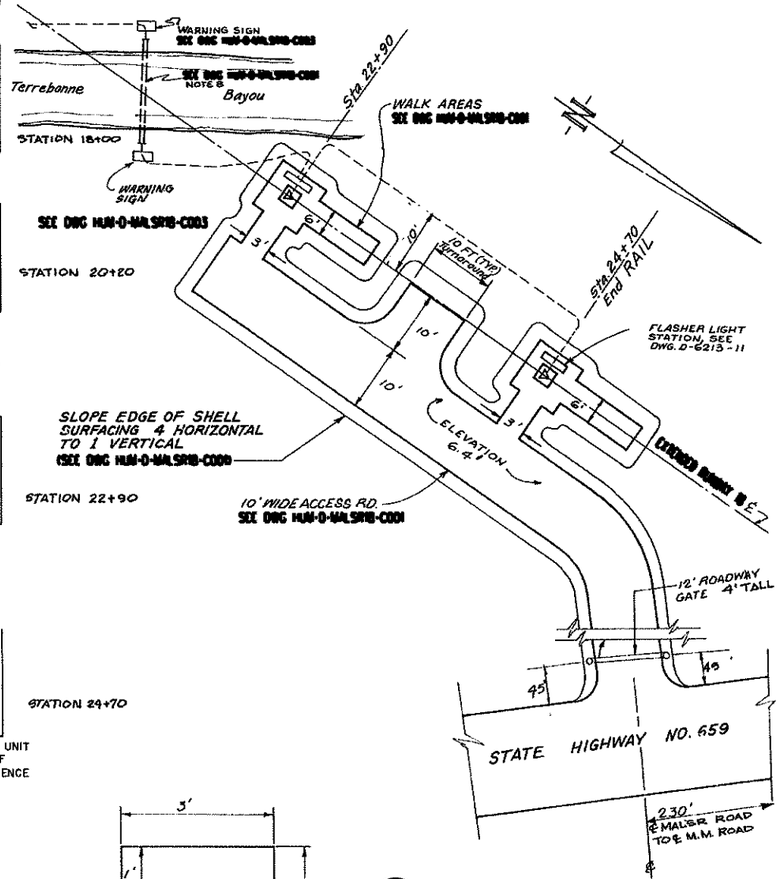

B C004 **DETAIL B - STATION 24+70 AND 22+90**
NOT TO SCALE

CENTRAL SERVICE AREA — FORT WORTH, TX

MALSR

WIRING DIAGRAM

HOUMA — HOUMA-TERREBONNE AIRPORT — LA

PROJECT ENGINEER, AMB-680 — PLATFORM MANAGER, AMB-680
ORT TECHNICAL OPERATIONS — 10/13/2006 — 211837
SUM ENGINEERING SERVICES — HUM-D-MALSRIB-C004

ISSUED FOR CONSTRUCTION

EDM-HUM-D-MALSRIB-C004.dgn

THIS DRAWING PRODUCED ON THE ASW RO REGION MICROSTATION SYSTEM

SW-D-10049-3 ISSUED

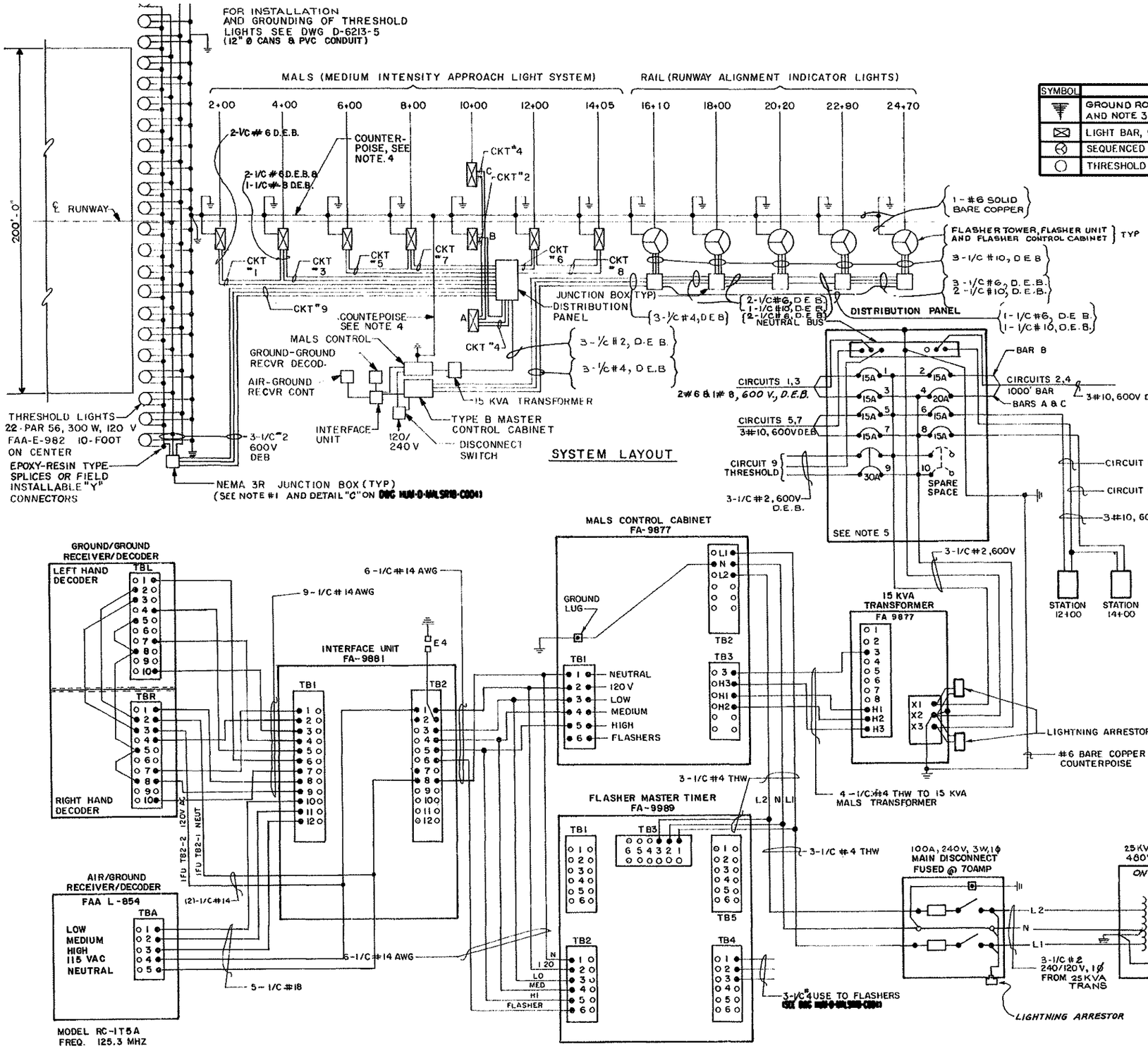

SYMBOL	DESCRIPTION
	GROUND ROD. SEE SYSTEM LAYOUT AND NOTE 3
	LIGHT BAR, 5 EACH, PAR 38, 120 V LAMPS
	SEQUENCED FLASHERS
	THRESHOLD LIGHTS

NOTES:

1 SEE ASSOCIATED ELECTRICAL DRAWINGS FOR WIRING AT EACH STATION.

2 FOR MOUNTING DETAILS OF POWER AND CONTROL STATION, SEE DRAWING D-6213-4

3 GROUND ROD 3/4" x 10' AT EACH LIGHT STATION AND GROUND EQUIPMENT & STRUCTURE

4 # 6 BARE COPPER COUNTERPOISE WIRE ABOVE ALL CABLE RUNS IN TRENCH

5 ALL CIRCUIT BREAKERS BOLT ON TYPE.

PIECE NO	* TYPICAL QUANTITIES FOR MALSR SYSTEMS DESCRIPTION	QUANTITY
1	CONTROL CABINET FA-9877	1
2	15KVA POWER TRANSFORMER FA-9877	1
3	TYPE B MASTER CONTROL FA-9989	1
4	INDIVIDUAL CONTROL CABINET FA-9985	5
5	FLASHER ASSEMBLY, TYPE I FA-9985	5
6	AIMING DEVICES	2
7	PAR 38 LAMP HOLDER ASSEMBLY FA-9877	45
8	LIGHTNING ARRESTOR	4
9	PLUG & RECEPTACLE & CLAMPS	70
10	CABLE 1/C #2, 600 V TYPE USE	7100 FT
11	CABLE 1/C #4, 600 V TYPE USE	3700 FT
12	CABLE 1/C #8, 600 V TYPE USE	2600 FT
13	CABLE 1/C #10, 600 V TYPE USE	4800 FT.
14	CABLE 1/C #6, 600 V TYPE USE	4100 FT.
15	#6 BARE COPPER WIRE	5300 FT.
16	MAIN DISCONNECT SWITCH, POWER & CONTROL RACK	1
17	WARNING SIGNS (BURIED HIGH VOLTAGE CABLE)	6
18	WARNING SIGNS B-6081 (DANGER KEEP OFF)	6
19	2" FRANGIBLE COUPLING	93
20		
21		
22	INTERFACE UNIT FA-9871	1
23	GROUND-GROUND RECEIVER DECODER	1
24	AIR-GROUND RECEIVER CONTROLLER	1
25	CABLE 1/C #10 600V, THW	300 FT
26	CABLE 1/C #14 600V, THW	100 FT
27	CABLE 1/C #12 600V, THW	1400 FT
28		
29	THRESHOLD LIGHTS ELEVATED	22
30	JUNCTION BOX JB-2 NEMA 3R	6

* THIS IS A LIST OF TYPICAL QUANTITIES FOR REFERENCE ONLY.

CENTRAL SERVICE AREA — FORT WORTH, TX

MALSR

ELECTRICAL DETAILS

HOUMA — HOUMA-TERREBONNE AIRPORT — LA

PROJECT ENGINEER, AN-580 — PLATFORM MANAGER, AN-580

GBT TECHNICAL OPERATIONS SLH ENGINEERING SERVICES — 10/13/2006 — 211837

HUM-D-MALSR18-E001

ISSUED FOR CONSTRUCTION

EDM: HUM-D-MALSR18-E001.dgn

THIS DRAWING PRODUCED ON THE ASW RO REGION MICROSTATION SYSTEM

SW-D-10049-2 ACTIVE

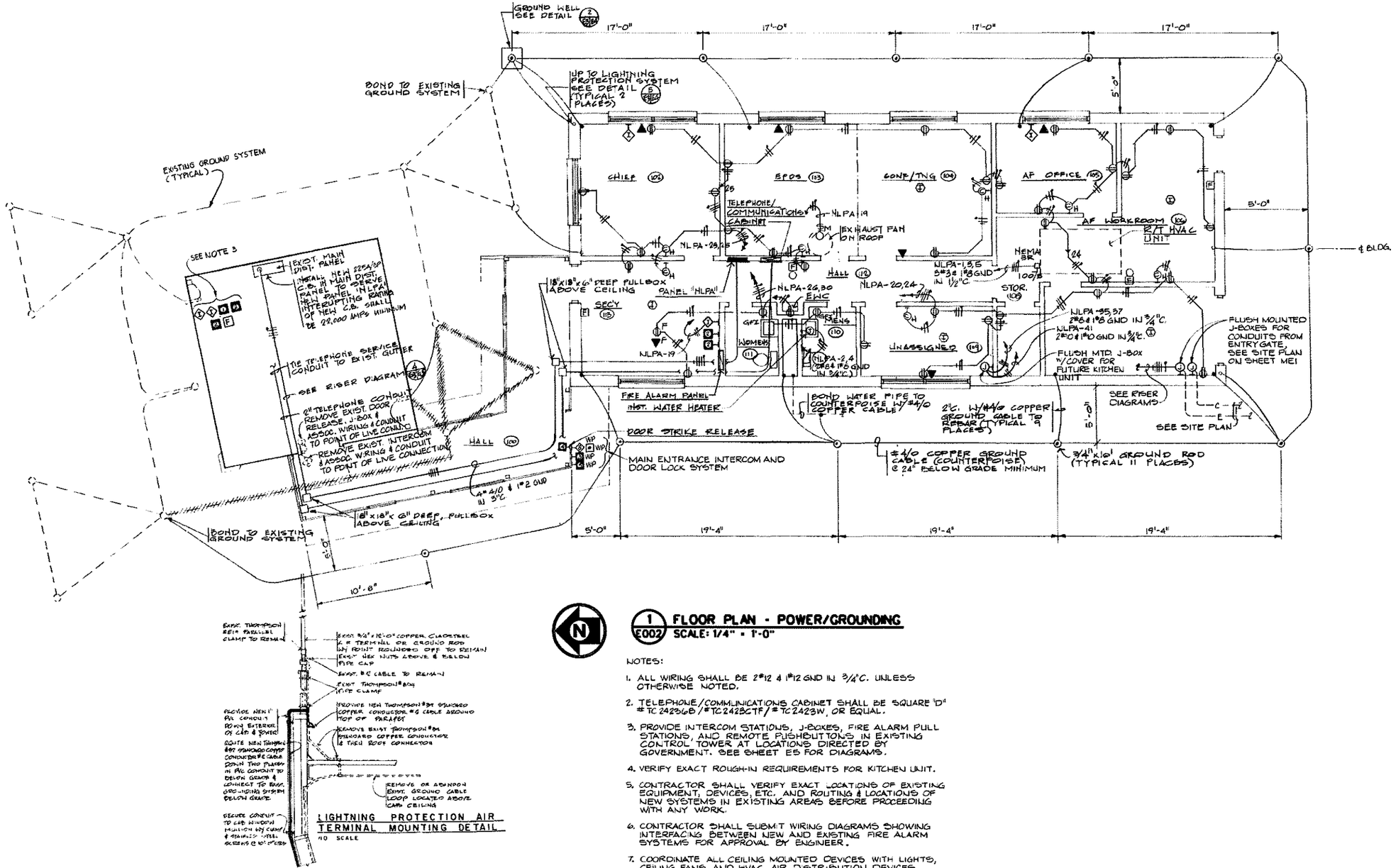

LIGHTNING PROTECTION AIR TERMINAL MOUNTING DETAIL
NO SCALE

1 FLOOR PLAN - POWER/GROUNDING
E002 SCALE: 1/4" = 1'-0"

NOTES:

1. ALL WIRING SHALL BE 2#12 & 1#12 GND IN 3/4"C. UNLESS OTHERWISE NOTED.
2. TELEPHONE/COMMUNICATIONS CABINET SHALL BE SQUARE 'D' #TC 2423GB/#TC2423CTF/#TC2423W, OR EQUAL.
3. PROVIDE INTERCOM STATIONS, J-BOXES, FIRE ALARM PULL STATIONS, AND REMOTE PUSHBUTTONS IN EXISTING CONTROL TOWER AT LOCATIONS DIRECTED BY GOVERNMENT. SEE SHEET E5 FOR DIAGRAMS.
4. VERIFY EXACT ROUGH-IN REQUIREMENTS FOR KITCHEN UNIT.
5. CONTRACTOR SHALL VERIFY EXACT LOCATIONS OF EXISTING EQUIPMENT, DEVICES, ETC. AND ROUTING & LOCATIONS OF NEW SYSTEMS IN EXISTING AREAS BEFORE PROCEEDING WITH ANY WORK.
6. CONTRACTOR SHALL SUBMIT WIRING DIAGRAMS SHOWING INTERFACING BETWEEN NEW AND EXISTING FIRE ALARM SYSTEMS FOR APPROVAL BY ENGINEER.
7. COORDINATE ALL CEILING MOUNTED DEVICES WITH LIGHTS, CEILING FANS AND HVAC AIR DISTRIBUTION DEVICES, SEE SHEET E4.

4' 0 4' 8'
SCALE: 1/4" = 1'-0"

CENTRAL SERVICE AREA — FORT WORTH, TX

MALSR

POWER/GROUNDING PLAN

HOUMA — HOUMA-TERREBONNE AIRPORT — LA

PROJECT ENGINEER, ANI-680 — PLATFORM MANAGER, ANI-680

GBT TECHNICAL OPERATIONS ENGINEERING SERVICES — 10/13/2006 — 211837

SLH — HUM-D-MALSR18-E002

ISSUED FOR CONSTRUCTION

CDW: HUM-D-MALSR18-E002.dgn

THIS DRAWING PRODUCED ON THE ASW RO REGION MICROSTATION SYSTEM

SW-D-10375-E3 ACTIVE

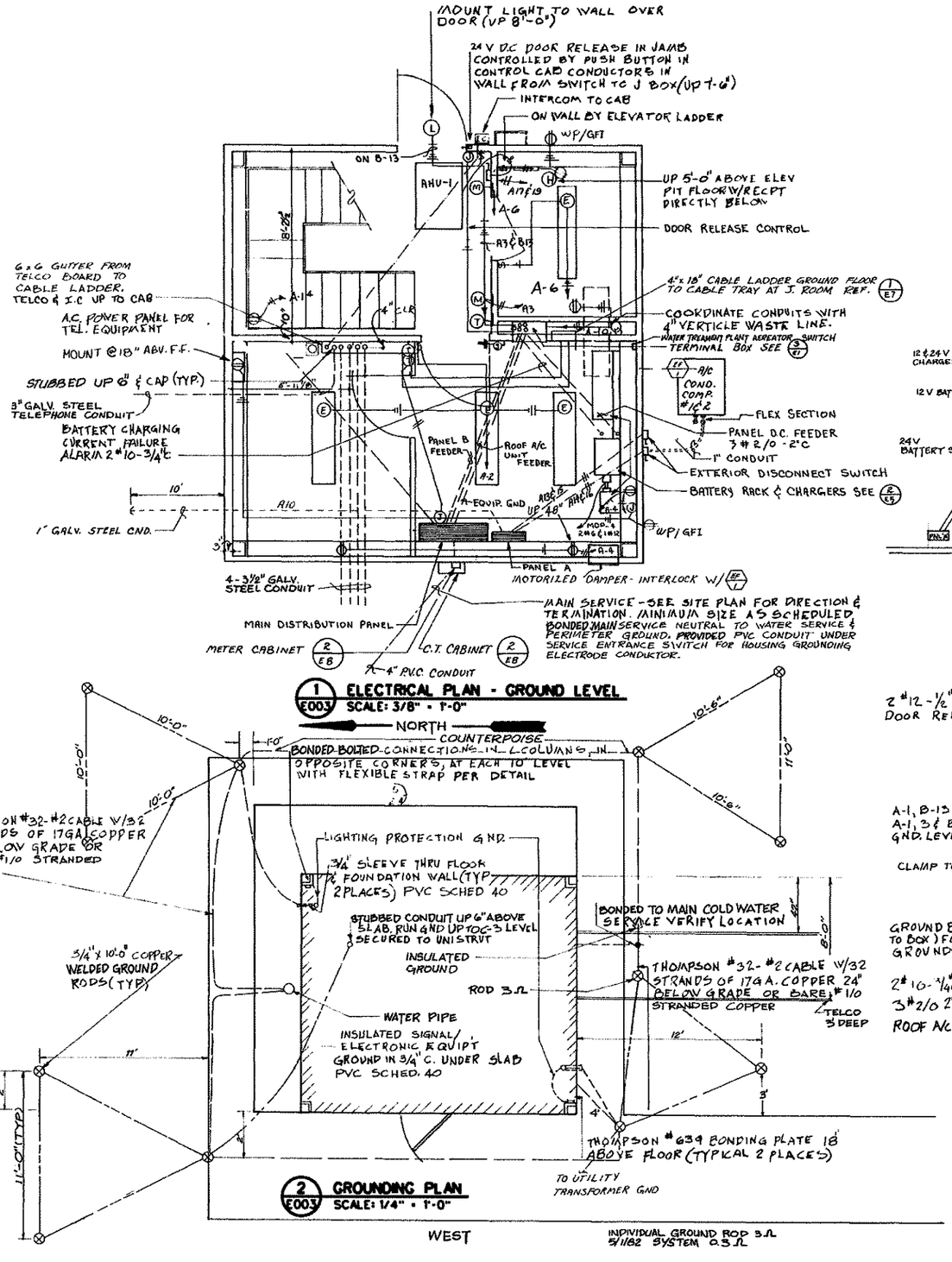

1 E003 ELECTRICAL PLAN - GROUND LEVEL
SCALE: 3/8" = 1'-0"

2 E003 GROUNDING PLAN
SCALE: 1/4" = 1'-0"

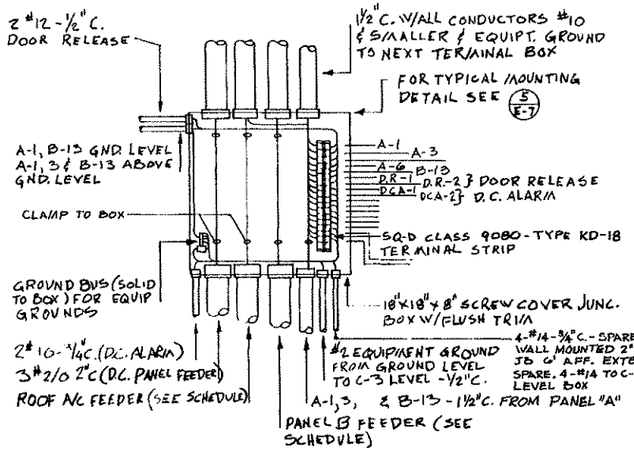

3 E003 TERMINAL BOX - GROUND LEVEL
NOT TO SCALE

2' 0 2' 4' 6'
SCALE: 3/8" = 1'-0"

4' 0 4' 8'
SCALE: 1/4" = 1'-0"

NOTE.
GFI RECEPTACLES WAS INSTALLED AT ALL EXTERIOR GENERAL PURPOSE OUTLETS

NOTES (FOR DETAIL 3/E7 3/E2 5/E3 6/E4 9/E5)

1. EACH WIRE HAS T&B "E-Z" CODE WIRE/MARKERS WITH CIRCUIT DATA (I.E "A-1") INCLUDING NEUTRAL S (I.E "A-1N") & FEEDERS (I.E "DC-1, DC-2" ETC.)
2. A PERMANENT INDEX IS ATTACHED TO THE INTERIOR OF THE TRIM IDENTIFYING EACH TERMINAL AND CONDUCTOR
3. CONDUIT ENTRANCES WAS VARIED AS BEST SUITED TO JOB CONDITIONS.
4. TERMINAL BOXES FOR ALL LEVELS ARE THE SAME AS THE ABOVE EXCEPT FOR CONDUIT ENTRANCES.

CENTRAL SERVICE AREA — FORT WORTH, TX

MALSR

ELECTRICAL FLOOR PLAN GROUNDING AND DETAIL

ISSUED FOR CONSTRUCTION

HOUMA — HOUMA-TERREBONNE AIRPORT — LA

DO NOT SIGN ... PROJECT ENGINEER, AN-680 — DO NOT SIGN ... PLATFORM MANAGER, AN-680

GWT TECHNICAL OPERATIONS
SLM ENGINEERING SERVICES

10/13/2006 — 211837

HUM-D-MALSR18-E003

E:\DGN\HUM-D-MALSR18-E003.dgn

THIS DRAWING PRODUCED ON THE ASW RO REGION MICROSTATION SYSTEM

ACTIVE

SW-D-9678-E1

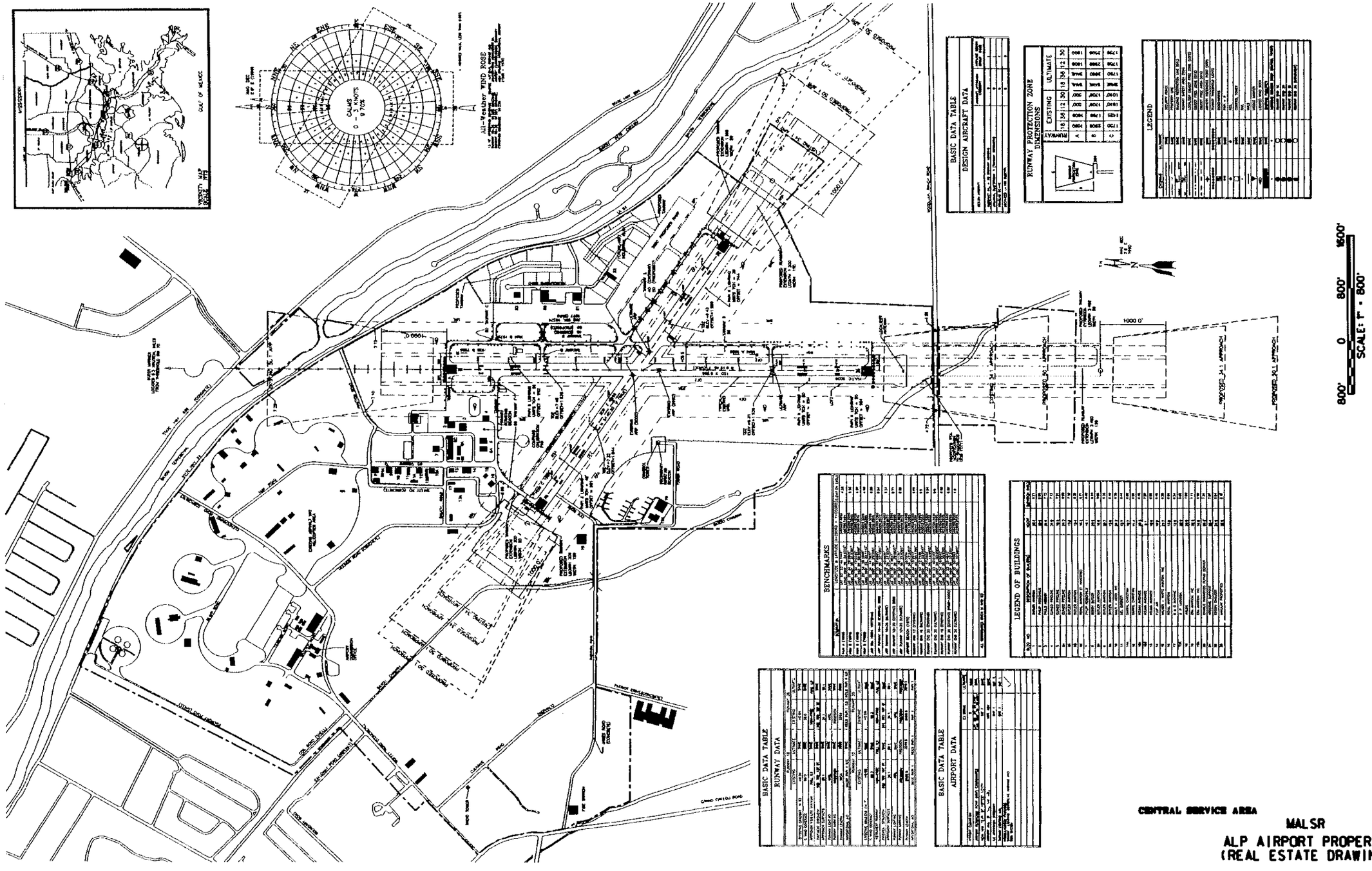

CENTRAL SERVICE AREA FORT WORTH, TX

MALSR

ALP AIRPORT PROPERTY
(REAL ESTATE DRAWING)

HOUMA HOUMA-TERREBONNE AIRPORT LA

PROJECT ENGINEER, AN-880 PLATFORM MANAGER, AN-880

GRT TECHNICAL OPERATIONS 10/13/2006 21837

SLH ENGINEERING SERVICES HUM-D-MALSR18-R001

THIS DRAWING PRODUCED ON THE ASW RO REGION MICROSTATION SYSTEM

ACTIVE

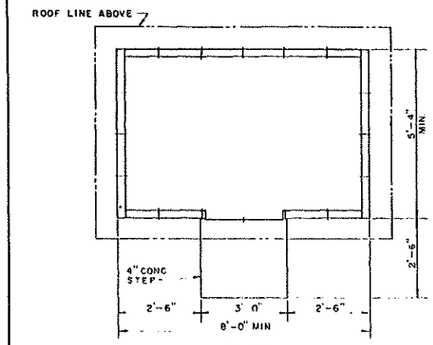

PLAN
SCALE: $\frac{1}{2}$" = 1'-0"

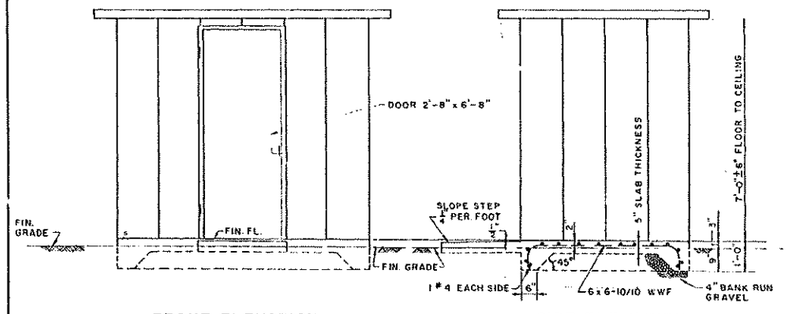

FRONT ELEVATION
SCALE: $\frac{1}{2}$" = 1'-0"

SIDE ELEVATION
SCALE: $\frac{1}{2}$" = 1'-0"

GENERAL NOTES

PREFABRICATED METAL BUILDING

DESCRIPTION – BUILDING SHALL BE PRE-ENGINEERED, SELF-FRAMING TYPE WITH PANELS PROVIDING STRUCTURAL SUPPORT AND COVER IN ONE UNIT, FURNISHED WITH ALL ITEMS INCIDENTAL TO ERECTION. THE STORAGE SHED SHALL CONFORM TO THE SPACE REQUIREMENTS ON THIS DRAWING; HOWEVER THE CONTRACOR MAY SUBSTITUTE A SUITABLE COMMERCIAL PRODUCT OF MINIMUM 20 GAUGE GALV. SHEET STEEL, EQUIVALENT STORAGE CAPACITY, & 6'-6" MINIMUM HEIGHT, ERECTED ON CONCRETE FLOOR IN ACCORDANCE WITH MANUFACTURER'S INSTRUCTION

REV. LTR.	DATE	DESCRIPTION	CHECKED	APPROVED

DEPARTMENT OF TRANSPORTATION
FEDERAL AVIATION ADMINISTRATION
SOUTHWEST REGION — FORT WORTH, TEXAS

MALS
STORAGE BUILDING
PLAN AND ELEVATIONS

REVIEWED BY	SUBMITTED BY	APPROVED BY
	CHIEF, ELECTRO/MECH SECT SW-435	CHIEF, ENGINEERING BRANCH SW-430
DES. REV. BY	ISSUED BY	DATE 26 JANUARY 1970
DRAWN BY EMV	AIRWAY FACILITIES DIVISION	DRAWING NO. SW-C-7450
CHECKED BY		

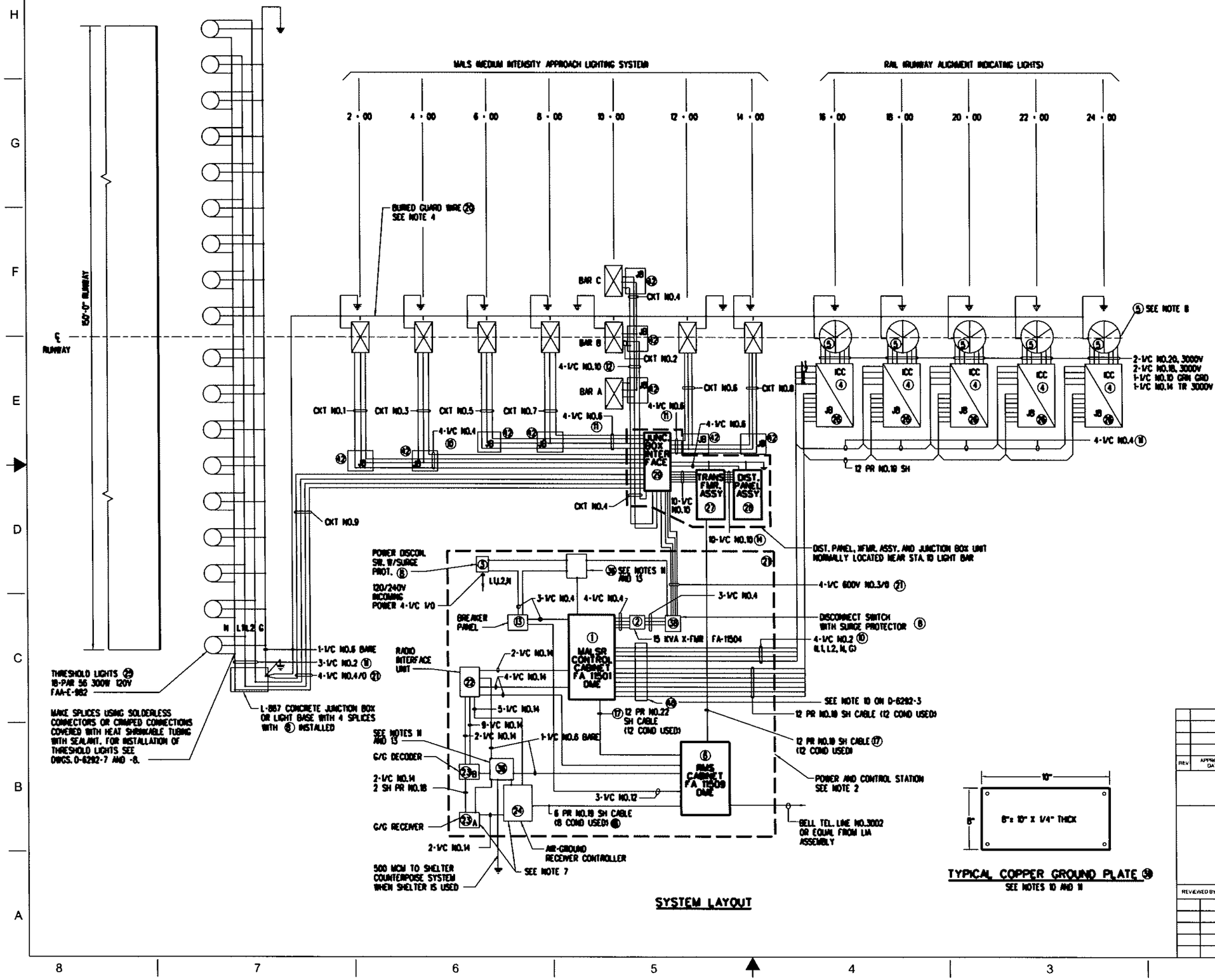

SYSTEM LAYOUT

NOTES:

1. SEE ASSOCIATED ELECTRICAL DRAWINGS FOR WIRING AT EACH STATION.
2. FOR MOUNTING DETAILS OF POWER AND CONTROL STATION SEE D-6292-5 OR OPTIONAL SHELTER, D-6292-19 TO 22.
3. INSTALL COPPER-CLAD STEEL GROUND ROD 3/4" X 10' AT EACH LIGHT STATION AND GROUND EQUIPMENT AND STRUCTURE.
4. INSTALL NO.6 BARE COPPER BURIED GUARD WIRE ABOVE ALL CABLE RUNS IN TRENCH AS SHOWN ON VARIOUS DRAWINGS D-6292-1 THRU D-6292-16.
5. SEE DRAWINGS D-6274-1 THRU D-6274-6 FOR RADIO CONTROL EQUIPMENT INSTALLATION OPTION.
6. SEE D-6292-8 FOR SEMIFLUSH THRESHOLD INSTALLATION.
7. TERMINATE (23) AND (24) IN ACCORDANCE WITH INSTRUCTION BOOK DIAGRAMS SUPPLIED WITH EQUIPMENT.
8. SEE TABLE ON DWG. D-6292-4 FOR IDENTIFICATION OF CIRCLED ITEMS.
9. ALL CABLES USED IN STEADY BURNING LIGHTS ABOVE GROUND SHALL BE THWN 600V STRANDED, BELOW-GROUND CABLES SHALL BE USE/XLP 600V STRANDED OR OTHER RATED FOR UNDERGROUND USE.
10. GROUND PLATE LOCATIONS SHALL BE CHOSEN TO FACILITATE CONNECTION OF ALL EQUIPMENT CABINETS. GROUND PLATES SHALL BE MOUNTED ON NON-CONDUCTIVE MATERIAL OF SUFFICIENT SIZE TO RIGIDLY SUPPORT THE PLATES AFTER ALL CABLES ARE CONNECTED, IF SHELTER IS USED.
11. MULTIPOINT GROUND PLATES SHALL BE AS SPECIFIED IN FAA-STD-019B AND SHALL HAVE A PLASTIC COVER/PROTECTIVE SHIELD AND SHALL BE IDENTIFIED WITH A PERMANENTLY ATTACHED LABEL THAT IS PREDOMINANTLY GREEN WITH BRIGHT ORANGE SLASHES.
12. CRIMPING TOOL 1/8" OR 3/16" SHALL BE APPROVED BY RESIDENT ENGINEER AND BE RECOMMENDED BY THE SPLICE/CRIMP MANUFACTURER.
13. MULTIPOINT GROUNDING PLATE IS SHOWN IN TWO SEPARATE PARTS FOR DRAWING CLARITY PURPOSES.

SYMBOL	DESCRIPTION
△	GOVERNMENT FURNISHED, CONTRACTOR INSTALLED MATERIAL, SEE D-6292-4
⊠	LIGHT BAR, 5 EACH, PAR 38, 120 V 120 W MSBR
Ⓨ	SEQUENCED FLASHERS
○	THRESHOLD LIGHTS
⏚	GROUND ROD SEE NOTE 3
JB	LIGHT STATION JUNCTION BOX WITH ITEM NO.8

TYPICAL COPPER GROUND PLATE (9)
SEE NOTES 10 AND 11

REV	APPROVED DATE	DESCRIPTION	JCN	REDLINE DATE	APVD

DEPARTMENT OF TRANSPORTATION
FEDERAL AVIATION ADMINISTRATION

FA-11500 MALSR WITH RMS ELECTRICAL DETAILS NO.1

REVIEWED BY	SUBMITTED BY ORIGINAL DRAWING SIGNED BY:	APPROVED BY ORIGINAL DRAWING SIGNED BY:
	SETH COUSLAR	GARY SKILLICORN
	SYSTEM ENGINEER, AMA-	PLATFORM MANAGER, AMA-
	DESIGNED / ISSUED BY	DATE 07/31/98 JCN
	DRAWN	DRAWING NO 0-6292-2 REV
	CHECKED	

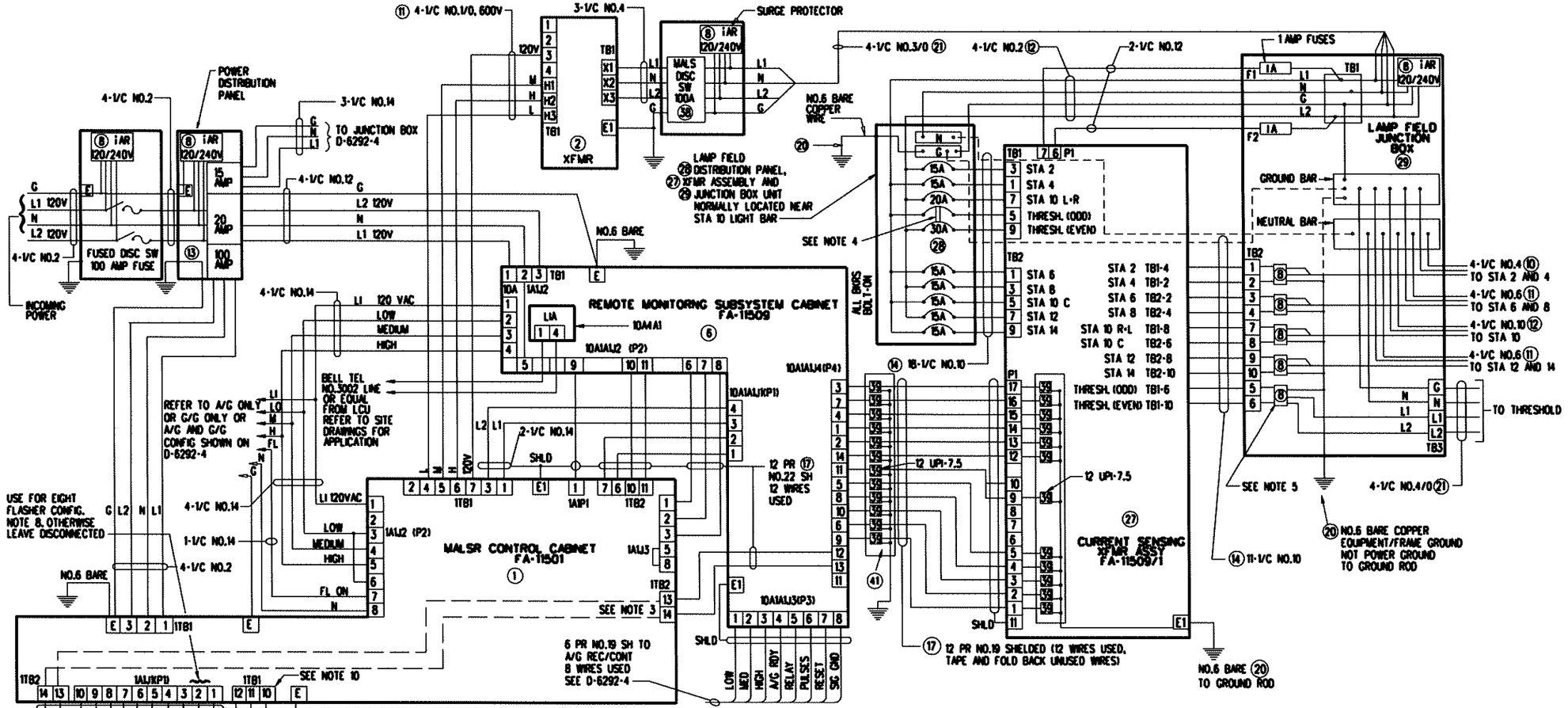

SYSTEM LAYOUT

NOTES:

1. FLASHER POWER WIRING BETWEEN CONTROL CABINET (1) AND JUNCTION BOX AT STA 16 + 00 SHALL BE 4-1/C NO.2 AND WIRING BETWEEN JUNCTION BOXES FROM STA 16 TO OTHER JUNCTION BOXES SHALL BE 4-1/C NO.4.
2. REPLACE TERMINAL BLOCKS W/TERMINAL BLOCKS SIZED TO HANDLE THE SIZE AND NUMBER OF WIRES BEING TERMINATED IN THE J BOX (26).
3. 1TB2-14 AND 13 ARE TIE POINTS FOR CONNECTING FLASHER MONITOR WIRES TO THE RMS.
4. USE A 2-POLE BREAKER FOR THE THRESHOLD LIGHT BAR ONLY WHEN SEMIFLUSH LIGHTS ARE USED AS THRESHOLD LIGHTS. OTHERWISE USE 2 SINGLE-POLE BREAKERS.
5. SURGE PROTECTORS (8) IN JB (29) AND SURGE PROTECTOR (34) IN JB (26) ARE REGIONAL OPTIONAL LIGHTNING PROTECTION FEATURES.
6. ALL CONDUCTORS TERMINATED IN ICC (4) AND FLASHER LIGHT (5) SHALL HAVE NO COPPER EXPOSED TO GUARD AGAINST ARCING.
7. SIXTY FEET OF 3KV CABLE IS SUPPLIED WITH EACH FLASHER LIGHT UNIT
8. WHEN EIGHT FLASHER CONFIGURATION IS USED, 64 OF ITEM (34) ARE REQUIRED. WHEN FIVE FLASHERS ARE USED ALL PROTECTORS ARE WIRED WHEN REQ'D BY SURGE PROTECTION REQUIREMENTS TO PROVIDE FLEXIBILITY.
9. FLASHERS/TRIGGERS SHALL BE CONNECTED AS FOLLOWS
   FLASHER UNIT/TRIGGER NO.

TRIG NO	1	2	3	4	5	6	7	8
	STATION NO.							
3000' SYS	30	28	26	24	22	20	18	16
2800' SYS		28	26	24	22	20	18	16
2600' SYS			26	24	22	20	18	16
2400' SYS				24	22	20	18	16

REFER TO D-6292-4 FOR OTHER ELECTRICAL NOTES AND CIRCLED ITEMS (PIECE NUMBERS) INDICATED ON THIS SHEET.

10. WIRING FROM CONTROL CABINET (1) FROM 1TB1-10, 11,12 TO SURGE PROTECTOR (8) AND FROM JUNCTION BOX (26) TB1-1,2,3 TO SURGE PROTECTORS (8) SHALL BE NO.8.

FA-11500 MALSR WITH RMS ELECTRICAL DETAILS NO.2

ORIGINAL DRAWING SIGNED BY:
SETH COUSLAR
SYSTEM ENGINEER, ANB

ORIGINAL DRAWING SIGNED BY:
GARY SKILLICORN
PLATFORM MANAGER, ANB
07/31/98

D-6292-3

TYPICAL QUANTITIES FOR MALSR SYSTEMS (NOTES 1 AND 13)

ITEM NO.		DESCRIPTION	QUANTITY
1	△	CONTROL CABINET FA-11501	1
2	△	15KVA POWER TRANSFORMER FA-11504	1
3		DISCONNECT SWITCH, 120/240V 3W 100AMP HD WITH SURGE PROTECTOR	2
4	△	INDIVIDUAL CONTROL CABINET FA-11502	5
5	△	FLASHER LIGHT UNIT FA-11503	5
6	△	REMOTE MONITORING SUBSYSTEM FA-11508	1
7	△	PAR 38 LAMP HOLDER ASSEMBLY FA-11506	45
8		SURGE PROTECTOR eTriAR 120/240V (NOTE 14)	21
9		PLUG & RECEPTACLE L-823	AS REQ'D
10	△	CABLE 1/C NO.2 600V TYPE THWN USE/XLP)	6000 FT
11	△	CABLE 1/C NO.4 600V TYPE THWN USE/XLP) NOTE 7	7500 FT
12	△	CABLE 1/C NO.6 600V TYPE THWN USE/XLP)	400 FT
13		BREAKER PANEL 100A 20A 15A	1
14	△	CABLE 1/C NO.12 600V TYPE THWN	1500 FT
15	△	CABLE 1/C NO.16 600V TYPE THWN NOTE 16	1000 FT
16	△	CABLE 1/C NO.14 600V TYPE THWN	200 FT
17		CABLE 12 PR NO.19 SHIELDED	600 FT
18		CABLE 6 PR NO.19 SHIELDED	2000 FT
19	△	2" FRANGIBLE COUPLING	AS REQ'D
20	△	NO.6 BARE COPPER WIRE	6000 FT
21	△	CABLE 1/C NO.1/0 600V TYPE THWN USE/XLP NOTE 7	5100 FT
22	△	INTERFACE UNIT FA-10141	1
23	△	GROUND-GROUND RECEIVER DECODER FA-10047/ FA-10266	1
24	△	AIR-GROUND RECEIVER CONTROLLER L-854	1
25	△	THRESHOLD LIGHTS ELEVATED WITH GREEN FILTERS	18
26	△	JUNCTION BOX JB-2 14"X14"X6" WITH TERMINAL BLOCKS	5
27	△	CURRENT TRANSFORMER ASSEMBLY FA-11509/1	1
28		LAMP FIELD DISTRIBUTION PANEL	1
29		JUNCTION BOX INTERFACE 30"X20"X8" WITH TERM BLOCKS (AS REQ)	1
30	△	THRESHOLD LIGHTS: SEMI-FLUSH FA-10336 (TALA)	18/ AS REQ'D
31	△	LINK CONTROL UNIT FA-10291	1
32		24-28 VOLT POWER SUPPLY (FOR LCU) (31)	1
33	△	UHF TRANSCEIVER (MOTOROLA) NO.L1745	2
34		LIGHTNING PROTECTION DEVICE ITW LINX UPI-235 WITH 66M PUNCHDOWN BLOCK (SEE NOTE 14)	80
35		COAXIAL CABLE RG-214	AS REQ'D
36		MULTIPORT GROUNDING PLATE	1
37		CABLE 1/C NO.10 600V TYPE THWN	AS REQ'D
38		DISCONNECT SW 100AMP	1
39		LIGHTNING PROTECTOR ITW LINX UPI-7.5 WITH 66M PUNCHDOWN BLOCK (SEE NOTE 14)	24
40		CONTROL UNIT JUNCTION BOX	1
41		RMS JUNCTION BOX	1
42		LAMP STATION JUNCTION BOX (UNIT (8) INSTALLED)	9
43		POLYPHASE LIGHTNING ARRESTER	AS REQ'D

SEE NOTE 1
SEE NOTE 1
SEE NOTE 2

NOTES:

1. △ INDICATES GOVERNMENT FURNISHED, CONTRACTOR INSTALLED MATERIAL. IT MAY BE OPTIONAL FOR GOVERNMENT TO FURNISH CERTAIN WIRE AND CABLE.
2. SEE D-6292-7 FOR (30).
3. SPLICES SHALL NOT BE ALLOWED BETWEEN UNITS EXCEPT IN SPECIFIED HAND HOLES OR LIGHT BASES.
4. INSTALL AIR TO GROUND RECEIVER MOD KIT IN ACCORDANCE WITH TI6850.89.
5. FA-10047 CONNECTIONS ARE SHOWN ON AIR TO GROUND AND GROUND TO GROUND CONFIGURATION. FA-10266 CONNECTIONS ARE SHOWN ON THE GROUND TO GROUND CONFIGURATION.
6. ALL INTERIOR WIRING SHALL BE IAW FAA-C-1217F OR CURRENT EDITION.
7. ALL ABOVE-GROUND CABLE USED IN STEADY-BURNING LIGHTS SHALL BE THWN STRANDED; BELOW GROUND SHALL BE USE/XLP STRANDED OR OTHER TYPES QUALIFIED FOR DIRECT BURIAL.
8. THE NO.6 AWG GUARD WIRE SHALL BE SOLID COPPER IN NON-METALLIC CONDUIT.
9. ALL CABLE AND CONDUIT INSTALLATIONS SHALL BE IAW FAA-C-1391B OR LATEST EDITION.
10. ALL LIGHTNING PROTECTION AND GROUNDING SHALL BE IN CONFORMANCE WITH FAA-STD-019B AND FAA-STD-020.
11. IF IT IS REQUIRED TO PROVIDE FLASHER LIGHTS IN THE AIR-TO-GROUND MODE STRAP TERMINAL 3 TO 6 AND 7, AS SHOWN, OTHERWISE NO STRAP IS REQUIRED.
12. CONTRACTOR SHALL FURNISH 2 PR NO.18 INDIVIDUALLY SHIELDED CABLE (BELDEN NO.9368 OR EQUAL) AND INSTALL BETWEEN DECODER AND RECEIVER.
13. ITEM NUMBERS ARE SHOWN AS CIRCLED NUMBERS ON D-6292-2 THRU 8.
14. SURGE PROTECTORS (8) IN JB (29) AND SURGE PROTECTOR (34) IN JB (26).
15. WHEN EIGHT FLASHER CONFIGURATION IS USED, 64 OF ITEM (34) ARE REQUIRED. WHEN FIVE FLASHERS ARE USED 40 PROTECTORS ARE REQUIRED.
16. CABLE QUANTITY MAY VARY DEPENDING ON SPECIFIC SITE CONDITIONS.
17. IF A CONTROL INDUSTRIES RECEIVER CONTROLLER RC IT5D IS PURCHASED DO NOT INSTALL TIME DELAY MODIFICATION AS REQUIRED BY AFP 6910.3 CHANGE 177.

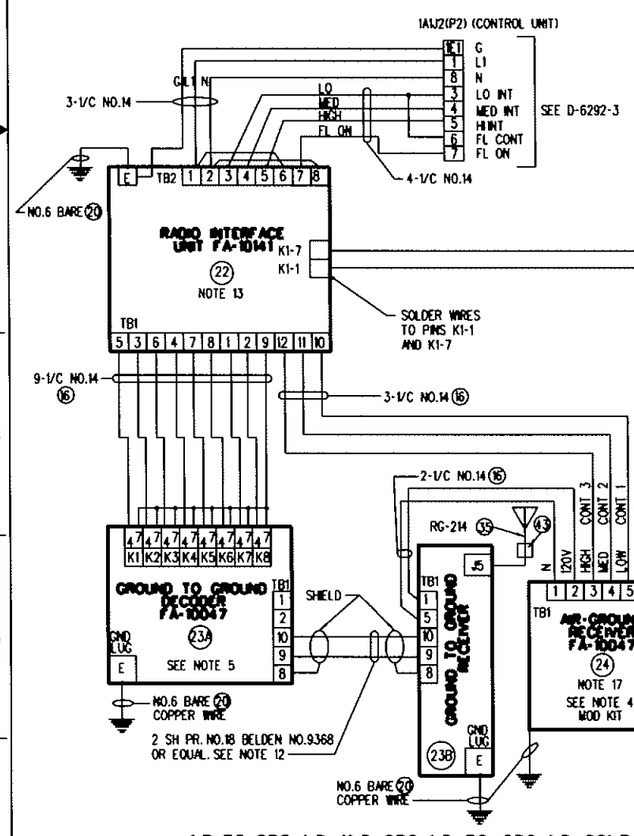

AIR-TO-GROUND AND GROUND TO GROUND CONFIGURATION
SEE NOTE 5

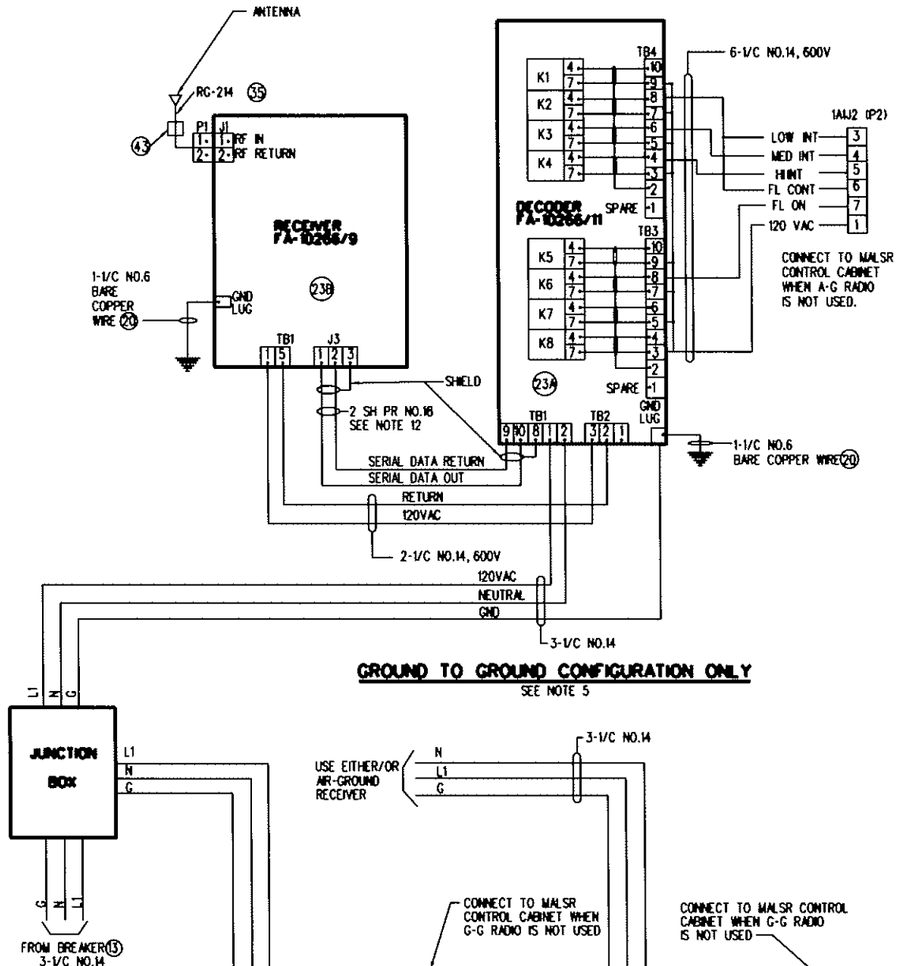

GROUND TO GROUND CONFIGURATION ONLY
SEE NOTE 5

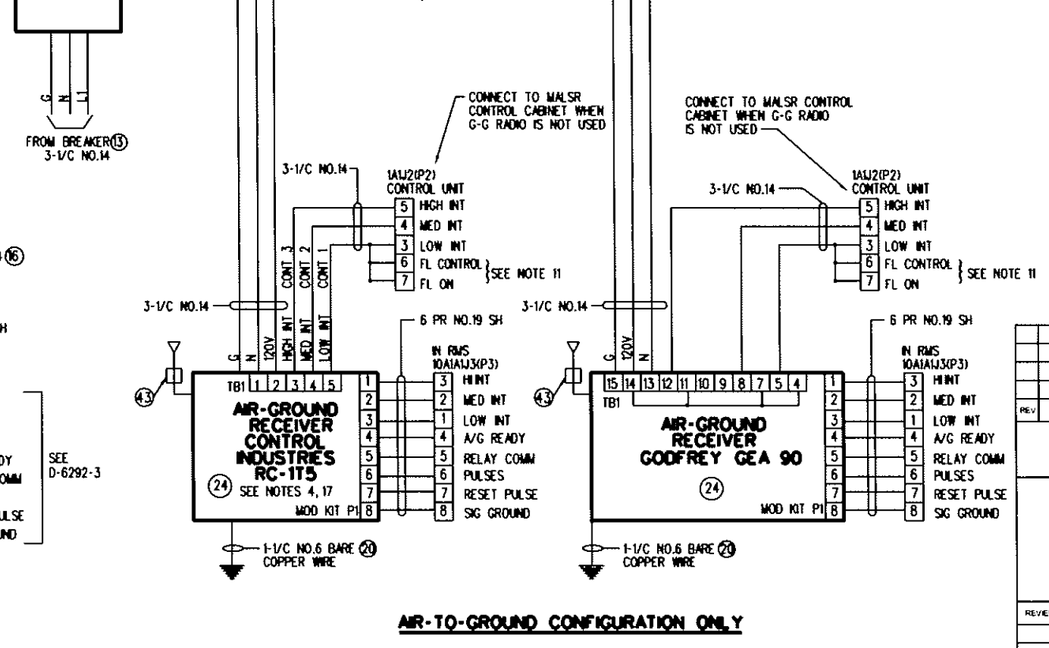

AIR-TO-GROUND CONFIGURATION ONLY

REV	APPROVED DATE	DESCRIPTION	JCN	REDELIVERY DATE	APVD

DEPARTMENT OF TRANSPORTATION
FEDERAL AVIATION ADMINISTRATION

FA-11500 MALSR WITH RMS ELECTRICAL DETAILS NO.3

REVIEWED BY	SUBMITTED BY	APPROVED BY
	ORIGINAL SIGNING SIGNED BY:	ORIGINAL SIGNING SIGNED BY:
	SETH COUSLAR	GARY SKILLICORN
	SYSTEM ENGINEER, AIG-	PLATFORM MANAGER, AIG-
	DESIGNED	DATE 07/31/18 JCN
	DRAWN	DRAWING NO D-6292-4 REV
	CHECKED	

ISSUED BY

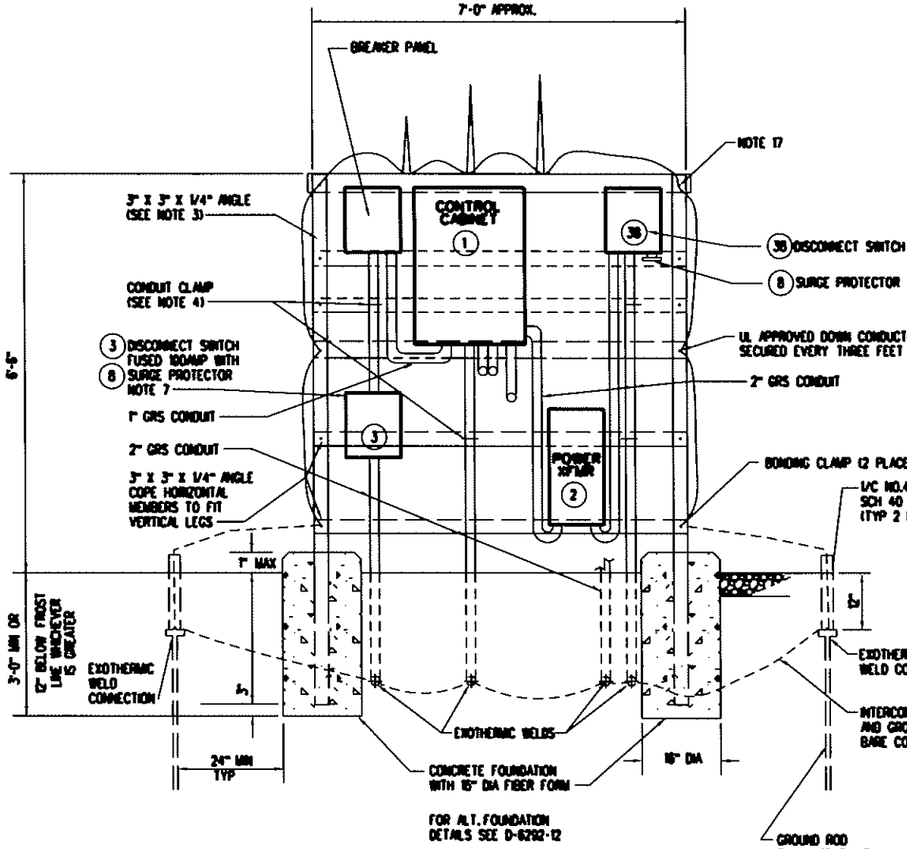

FRONT ELEVATION OF POWER AND CONTROL STATION

(SEE NOTES 8 AND 9)

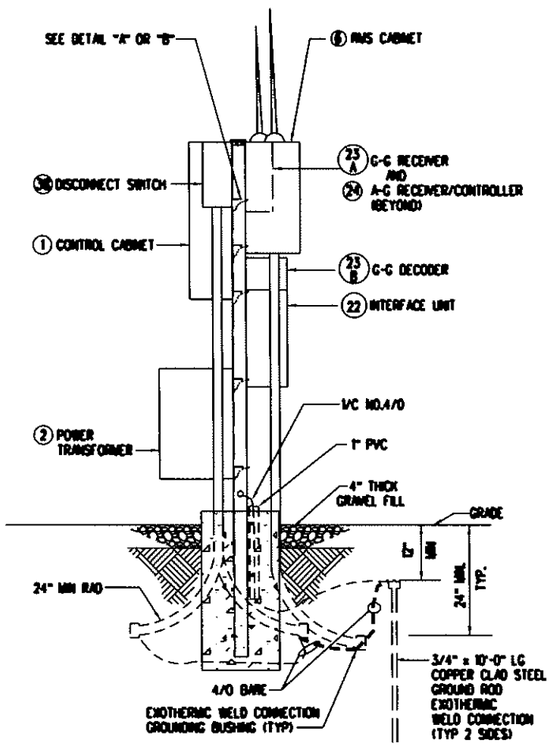

SIDE ELEVATION OF POWER AND CONTROL STATION

NOTES:

1. FOR LOCATION OF POWER AND CONTROL STATION SEE SITE PLAN.
2. CONDUITS AND NIPPLES SHALL BE IN SIZE SHOWN AND SHALL BE GALVANIZED EXCEPT FOR GROUND WIRE (PVC). TERMINATE EACH CONDUIT AND EACH NIPPLE IN A GROUNDED BUSHING. USE TWO LOCKNUTS AT EACH ENTRANCE INTO CABINETS.
3. 3" X 3" X 1/4" ANGLE GALVANIZED AFTER FABRICATION, SHALL BE BOLTED SECURELY USING 1/2" DIA. BOLTS, NUTS AND LOCKWASHERS. ADDITIONAL ANGLES AND/OR STRAPS SHALL BE USED AND POSITIONED AS REQUIRED TO FIRMLY MOUNT ALL EQUIPMENT TO FRAME. OPTIONAL GRS WITH DOUBLE BACK CHANNEL MAY BE USED IN LIEU OF ANGLE STEEL.
4. CONDUITS SHALL BE SECURED TO ANGLES WITH "U" CLAMPS AND SPACERS.
5. INSTALL THE RECEIVER-DECODER, THE INTERFACE BOX, AND THE RECEIVER CONTROLLER AS REQUIRED.
6. SEE D-6292-4 FOR ITEMS REFERENCED BY CIRCLED NUMBERS.
7. POWER DISCONNECT SWITCH, 240 VOLTS, 100 AMPS, 3 WIRE WITH NEUTRAL LUG IN NEMA RAINTIGHT ENCLOSURE NEMA TYPE HD, LOCKABLE, ON-OFF FUSIBLE, FUSED AT 100 AMPS IN CORROSIVE ENVIRONMENTS USE SS SWITCH.
8. THE POWER AND CONTROL STATION SUPPORTS MAY BE GALVANIZED UNISTRUT CONSTRUCTION.
9. THE POWER AND CONTROL STATION MAY BE INSTALLED IN A SHELTER. (SEE D-6292-18 THRU 22).
10. GROUND ROD RESISTANCE SHALL BE 10 OHMS OR LESS AFTER ALL RODS ARE CONNECTED.
11. ALL PARTS OF THIS STRUCTURE SHALL BE HOT DIPPED GALVANIZED IF NOT INDICATED.
12. ALL NUTS, BOLTS AND WASHERS USED TO INSTALL EQUIPMENT SHALL BE STAINLESS STEEL.
13. ALL RIGID STEEL CONDUIT INSTALLED BELOW GRADE SHALL BE COATED WITH ASPHALT-BASED COMPOUND OR PVC COATED PER FAA-D-1398.
14. ALL BELOW GRADE GROUNDING CONNECTIONS SHALL BE VIA EXOTHERMIC WELDS UNLESS OTHERWISE SPECIFIED.
15. THE USE OF WIREWAYS IS PERMISSIBLE IN LIEU OF LBS AND GRS CONDUITS IF DESIRABLE. POWER AND CONTROL WIRING SHOULD BE IN SEPARATE WIREWAYS OR CONDUITS.
16. ALL CONDUITS INTERCONNECTING RADIO CONTROL CABINETS SHALL BE 3/4" UNLESS OTHERWISE SPECIFIED.
17. PROVIDE LIGHTNING ARRESTOR, POLYPHASER IS-HEMP-C1 FOR EACH ANTENNA. SEE TYPICAL DETAILS ON D-6292-21.

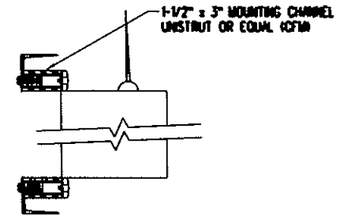

MOUNTING DETAIL "A"

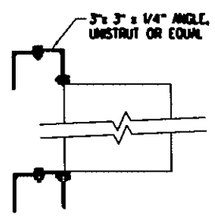

MOUNTING DETAIL "B"

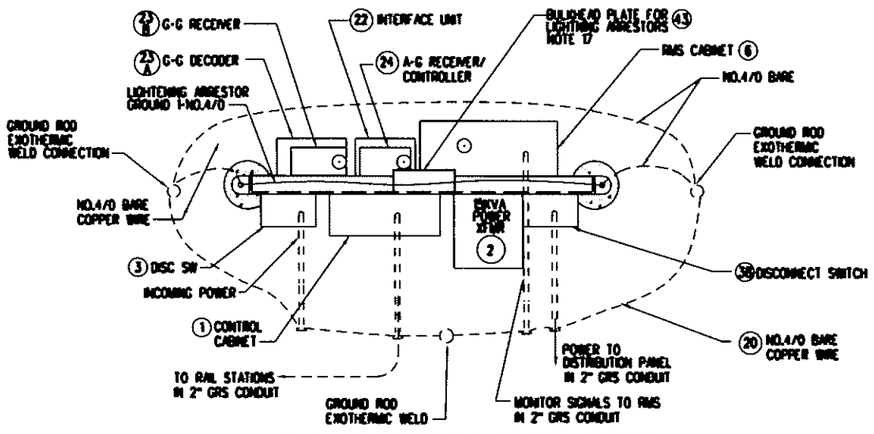

PLAN OF POWER AND CONTROL STATION

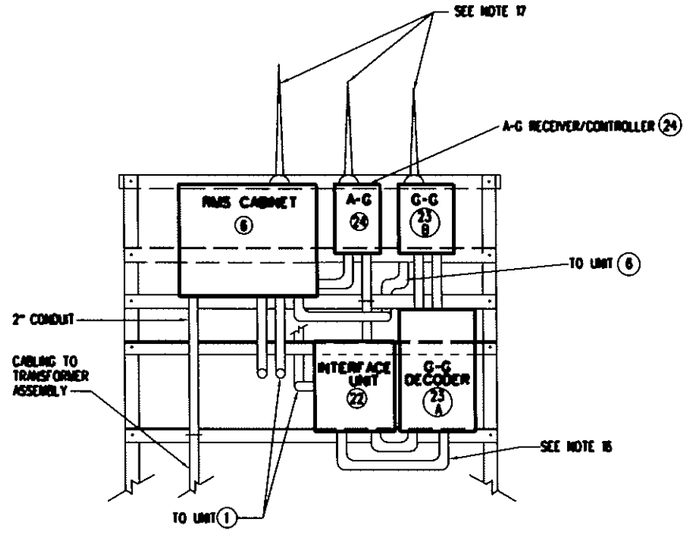

REAR ELEVATION OF POWER AND CONTROL STATION

REMOTE RADIO CONTROL SYSTEM AND REMOTE MONITORING SUBSYSTEM

REV	APPROVED DATE	DESCRIPTION	JCN	REDLINE DATE	APVD

DEPARTMENT OF TRANSPORTATION
FEDERAL AVIATION ADMINISTRATION

FA-11500 MALSR WITH RMS POWER AND CONTROL STATION EQUIPMENT EXTERIOR MOUNTING DETAILS

REVIEWED BY	SUBMITTED BY	APPROVED BY
	ORIGINAL DRAWING SIGNED BY:	ORIGINAL DRAWING SIGNED BY:
	SETH COUSLAR	GARY SKILLICORN
	SYSTEM ENGINEER, AMS-	PLATFORM MANAGER, AMS-
	DESIGNED / ISSUED BY	DATE 07/31/08 JCN
	DRAWN	DRAWING NO D-6292-5 REV
	CHECKED	

SCALES SHOWN | SYMBOLS | SHADES

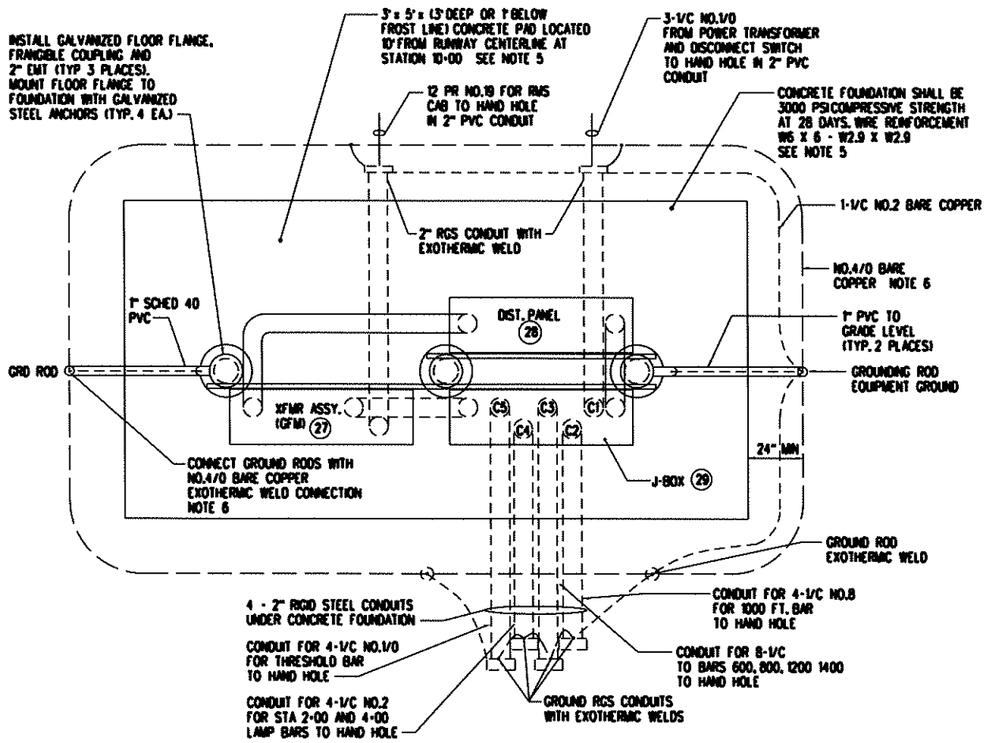

PLAN - J-BOX, DISTRIBUTION PANEL AND TRANSFORMER ASSEMBLY

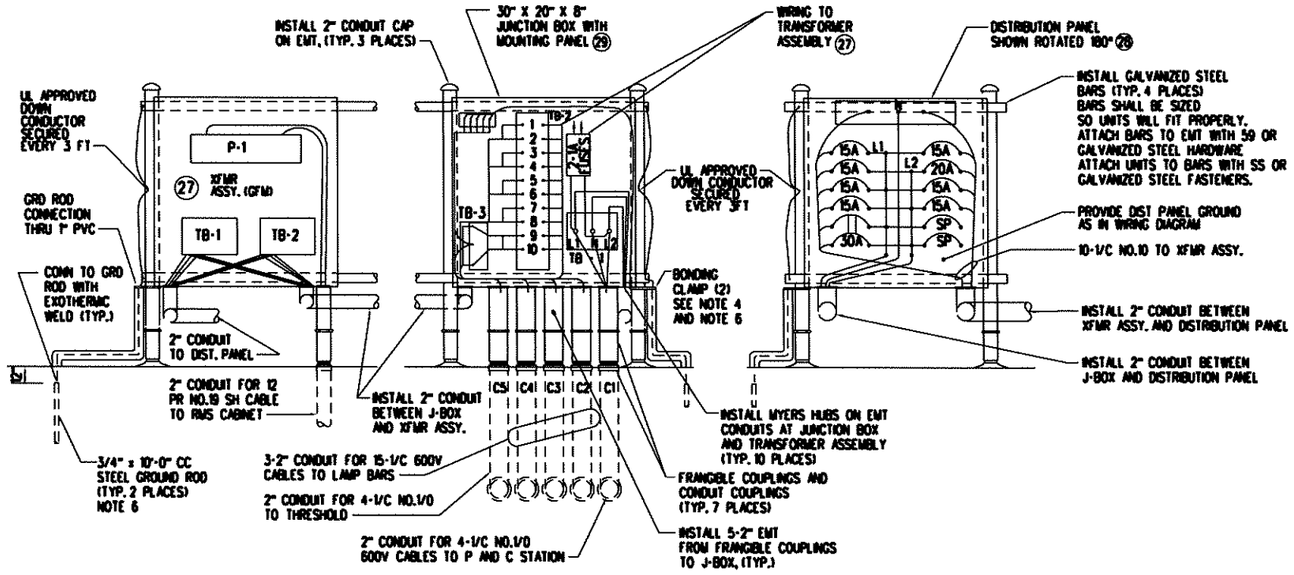

EXPLODED VIEW - J-BOX, DISTRIBUTION PANEL AND TRANSFORMER ASSEMBLY

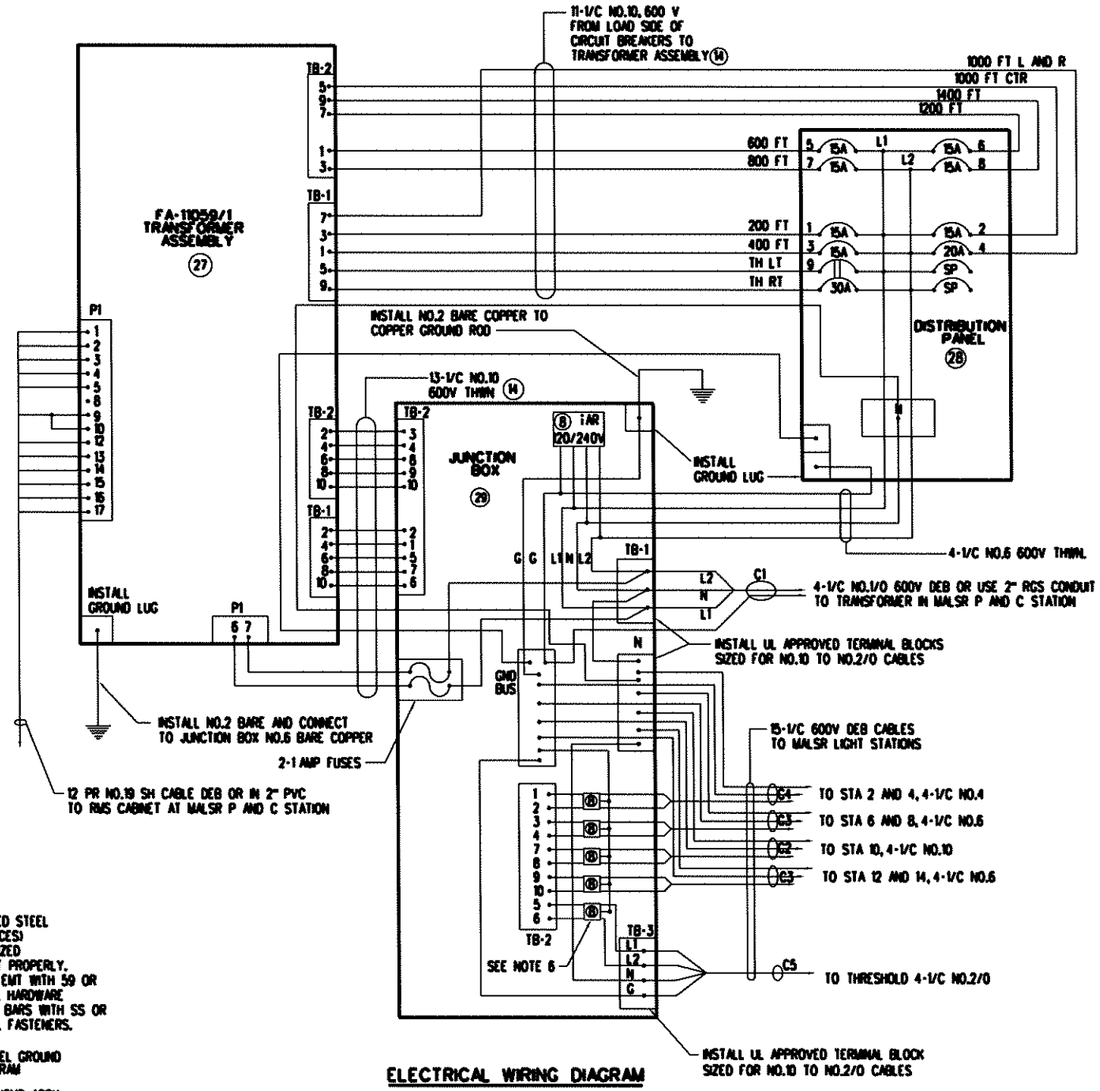

ELECTRICAL WIRING DIAGRAM

NOTES:

1. SEE SITE PLAN FOR LOCATION OF DISTRIBUTION PANEL AND TRANSFORMER ASSEMBLY.
2. SEE D-6292-4 FOR ITEMS REFERENCED BY CIRCLED NUMBERS.
3. STABILIZE DIST. PANEL AND TRANSFORMER ASSEMBLY BY ADDING GALVANIZED FLOOR FLANGE WITH FRANGIBLE COUPLING TO BACK OF BOX. CONNECT TO UNISTRUT CLAMPS AND STABILIZE BOX.
4. INSTALL A BONDING CLAMP ABOVE FRANGIBLE COUPLINGS AND ATTACH A RUN OF NO.4/0 BARE CABLE FROM GROUND ROD TO BONDING CLAMP THRU 1" PVC. BEND RADIUS OF DOWN CONDUCTOR SHALL BE GREATER THAN 8".
5. SEE FOUNDATION PLAN ON D-6292-12 AS AN ALTERNATE DESIGN.
6. SURGE PROTECTORS FOR LIGHTNING PROTECTION. PROTECTION WILL BE A REGIONAL SITE SPECIFIC REQUIREMENT.

REV.	APPROVED DATE	DESCRIPTION	JCN	REDLINE DATE	AP./D

DEPARTMENT OF TRANSPORTATION
FEDERAL AVIATION ADMINISTRATION

FA-11500 MALSR WITH RMS DISTRIBUTION PANEL, TRANSFORMER ASSEMBLY MOUNTING DETAILS

REVIEWED BY	SUBMITTED BY	APPROVED BY
	ORIGINAL DRAWING SIGNED BY: SETH COUSLAR	ORIGINAL DRAWING SIGNED BY: GARY SKILLICORN
	SYSTEM ENGINEER, AMS	PLATFORM MANAGER, AMS
	DESIGNED / ISSUED BY	DATE 07/31/98 JCN
	DRAWN	DRAWING NO. D-6292-6 REV.
	CHECKED	

SHEETS SHEET
SIZE
A

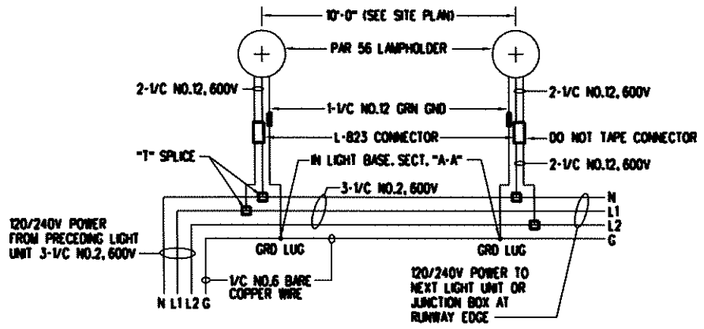

WIRING DIAGRAM FOR ADJACENT THRESHOLD LIGHTS

TYPICAL FOR ANY NUMBER OF UNITS
SEE NOTE 4

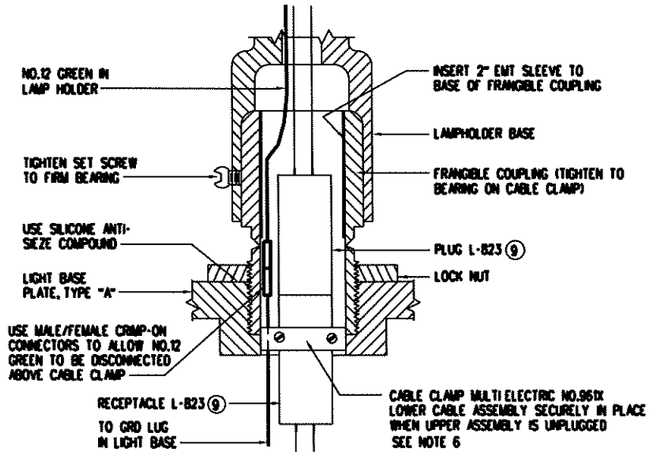

DETAIL "A"

NOT TO SCALE

NOTES:

1. ALL LIGHT BASES SHALL BE GROUNDED AS SHOWN IN SECTION "A-A" THE GROUND WIRE SHALL BE RUN THROUGH AND GROUNDED TO EACH BASE IN THE LIGHT BARS WITH THE NO.6 BARE COPPER GUARD WIRE. SEE DWG D-6292-2 FOR LOCATION OF GROUND RODS.
2. CONCRETE FOUNDATION TO HAVE A MINIMUM DEPTH OF 2'-6" OR BE 1'-0" BELOW LOCAL FROST LINE, WHICHEVER DEPTH IS GREATER.
3. SET THE LIGHT BASE WITH THE CONSTRUCTION (PLYWOOD) COVER SUPPLIED WITH THE LIGHT BASE.
4. EVERY OTHER LIGHT CONNECTS TO ALTERNATE CIRCUIT IN THE THRESHOLD BAR.
5. ALTERNATE LIGHT WIRING FOR ABOVE GROUND LIGHTS ONLY.
6. DRILL HOLE IN CABLE CLAMP AND INSTALL GREEN GROUND FROM GROUND LUG IN LIGHT BASE TO LAMP HOLDER. CARE SHOULD BE TAKEN NOT TO INSTALL CABLE CLAMP UPSIDE DOWN SO THAT WHEN THE FRANGIBLE COUPLING IS SCREWED IN, IT WILL NOT TWIST THE CLAMP AND RECEPTACLE SO AS NOT TO SHORT THE WIRING.

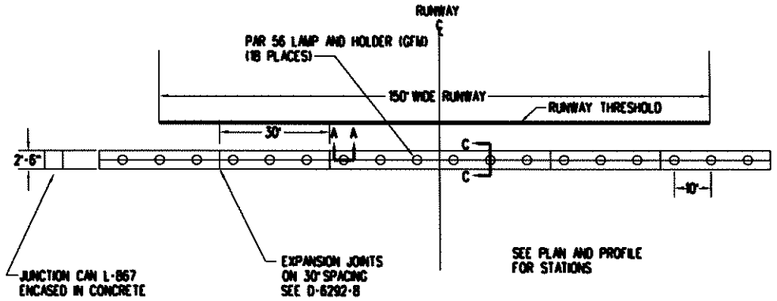

THRESHOLD PLAN

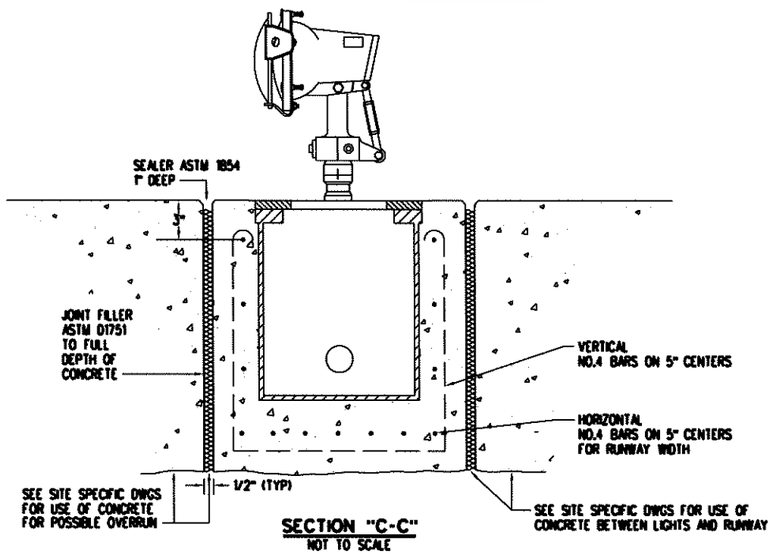

SECTION "C-C"

NOT TO SCALE

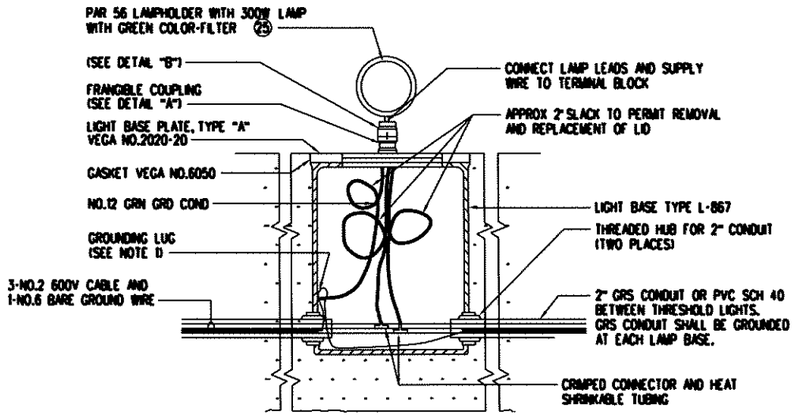

SECTION "A-A"
ELECTRICAL DETAILS OF A SINGLE UNIT

SEE NOTE 3
NOT TO SCALE

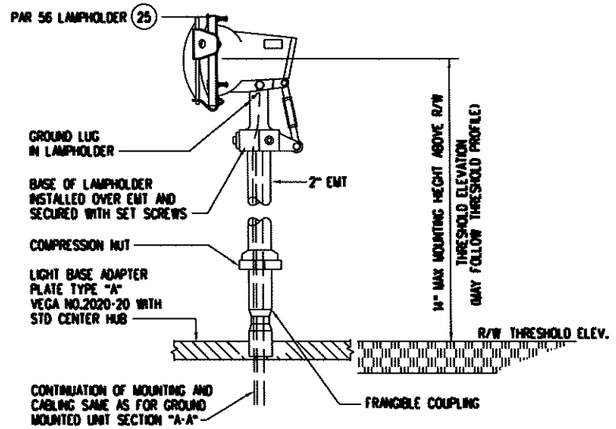

DETAIL "B"
ELEVATED MOUNTING
NOT TO SCALE

REV	APPROVED DATE	DESCRIPTION	JCN	REDLINE DATE	AP/D

DEPARTMENT OF TRANSPORTATION
FEDERAL AVIATION ADMINISTRATION

FA-11500 MALSR WITH RMS THRESHOLD LIGHT DETAILS

REVIEWED BY	SUBMITTED BY ORIGINAL DRAWING SIGNED BY:	APPROVED BY ORIGINAL DRAWING SIGNED BY:
	SETH COUSLAR	GARY SKILLICORN
	SYSTEM ENGINEER, ANI-	PLATFORM MANAGER, ANI-
	DESIGNED / ISSUED BY	DATE 07-31-98 JCN
	DRAWN	DRAWING NO D-6292-7 REV
	CHECKED	

SCALES: SYMBOLS / STYLES / SCALES

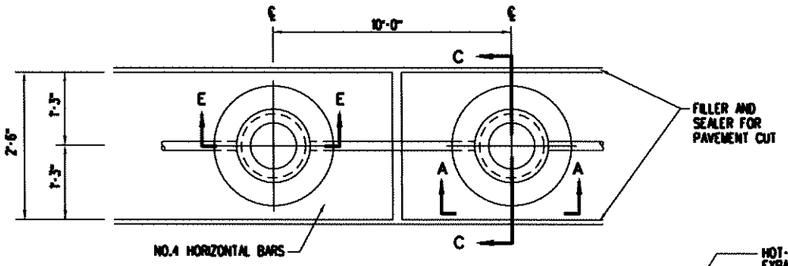

PLAN

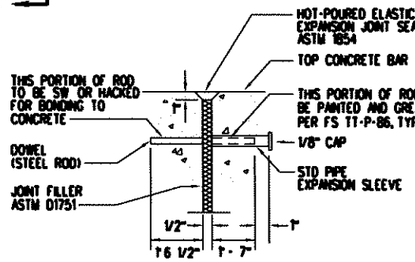

DETAIL "A"
NOTE 11

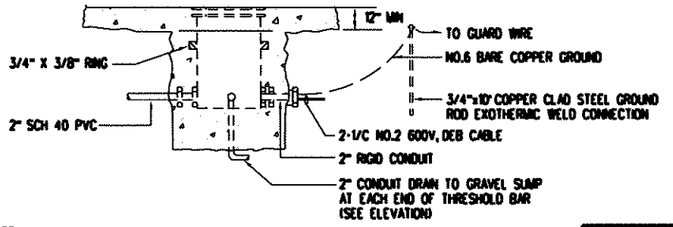

SECTION "A-A"
END UNIT

DOWEL SIZES	
PAVEMENT THICKNESS	DOWEL AND EXPANSION SLEEVE DIAMETER
6 - 7"	3/4"
8 - 12"	1"
13 - 16"	1 - 1/4"
17 - 20"	1 - 1/2"
21 - 24"	2"

NOTES:

1. ALL LIGHT BASES SHALL BE GROUNDED AS SHOWN IN SECTION "E-E". THE GROUND WIRE SHALL BE RUN THROUGH EACH BASE IN THE LIGHT BARS AND GROUNDED AT EACH CAN TO THE NO.6 BARE COPPER GUARD WIRE. SEE DWG D-6292-2 FOR LOCATION OF GROUND RODS.
2. CONCRETE FOUNDATION TO HAVE A MINIMUM DEPTH OF 2'-6" OR BE 1'-0" BELOW LOCAL FROST LINE, WHICHEVER DEPTH IS GREATER.
3. SET THE LIGHT BASE WITH CONSTRUCTION PLYWOOD COVER SUPPLIED WITH THE BASE.
4. LIGHT BASES SHALL CONFORM TO FAA ADVISORY CIRCULAR A/C 150/5345-42 "SPECIFICATION FOR AIRPORT LIGHT BASES AND TRANSFORMER HOUSING."
5. THE CONTRACTOR SHALL PROVIDE 3/8-16 X 1 1/4" LONG STAINLESS STEEL BOLTS AND STAINLESS STEEL SPLIT LOCKWASHERS FOR BOLTING MOUNTING RING TO LIGHT BASE, L-868.
6. FILL SPACE WITH SEALING COMPOUND NO.P606 FOR CONCRETE PAVEMENT OR USE FLANGE RING WITH GAM, PROVIDE CERTIFICATION OF THAT SEALER IS COMPATIBLE WITH PAVEMENT TYPE.
7. ENCASE 3/4" SUMP CRUSHED STONE WITH FILTER FABRIC.
8. DRAIN PIPE AND GRAVEL SUMP SHALL BE INSTALLED ON BOTH ENDS OF THRESHOLD LIGHT BAR.
9. USE ANTI-SEIZE COMPOUND WHEN INSTALLING STAINLESS STEEL BOLTS
10. SEMFLUSH THRESHOLD LIGHT FA-10336 IS FOR 200W, 6.6 AMP LAMP
11. DOWELS SHALL BE CENTERED IN PAVEMENT THICKNESS AND SHALL BE STRAIGHT AT 90° WITH EDGE OF PAVEMENT. ALL DOWELS SHALL HAVE SAME DIMENSIONS IAW TABLE. IN ZONE 1, DOWELS SHALL BE SPACED 12" APART BETWEEN LIGHT UNITS. IN ZONE 2, DOWELS SHALL BE SPACED 24" APART BETWEEN LIGHT UNITS.
12. SEAL UNUSED HOLE IN LIGHT BASES WITH PIPE PLUGS.

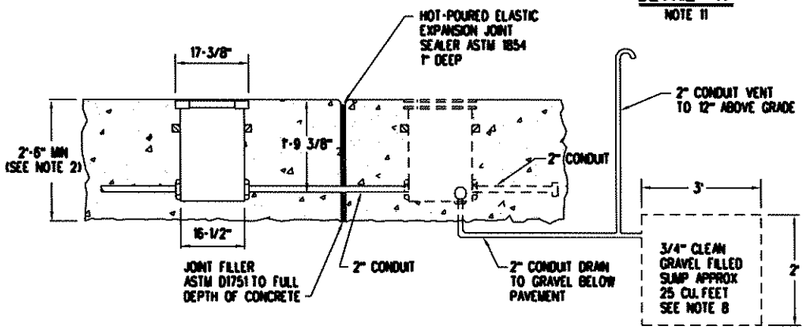

ELEVATION

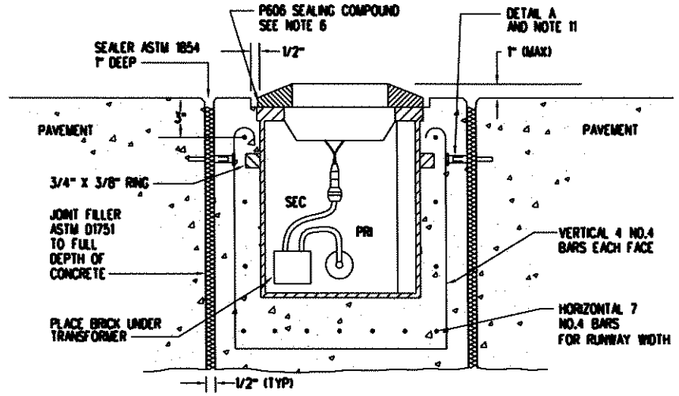

SECTION "C-C"

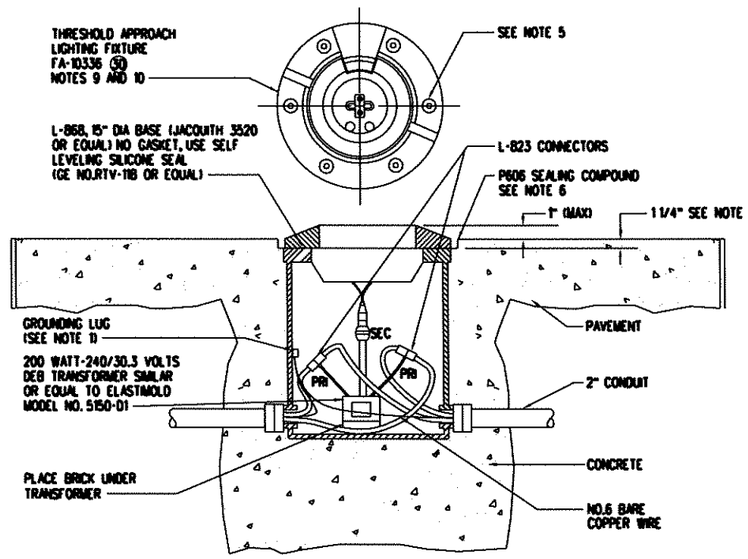

SECTION "E-E"
SEMI-FLUSH THRESHOLD FIXTURE
TYPICAL

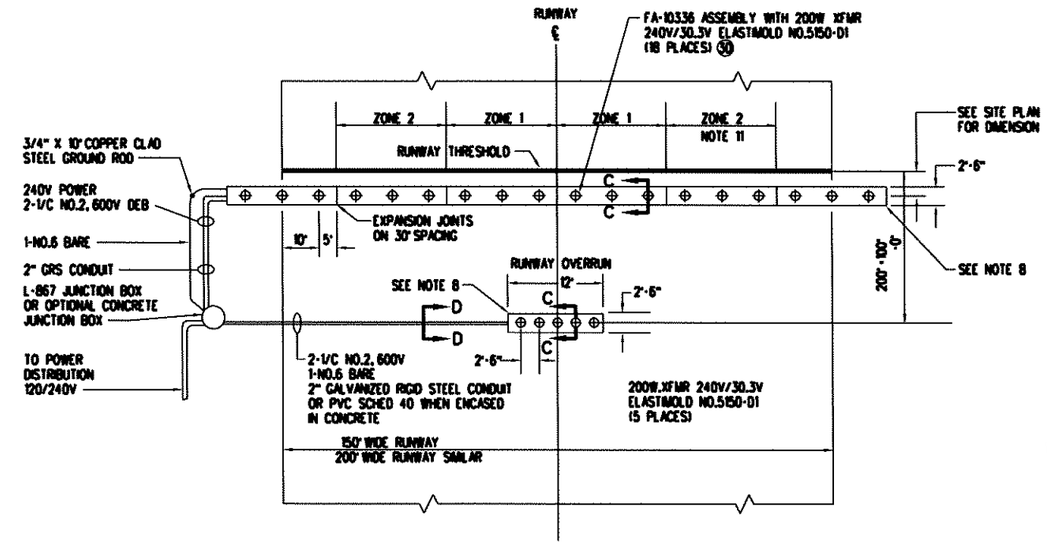

OVERRUN PLAN

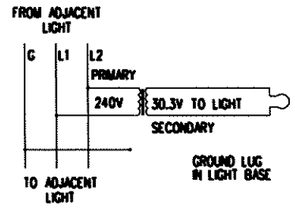

SEMIFLUSH
THRESHOLD WIRING
FOR EACH THRESHOLD LIGHT
NOTE 10

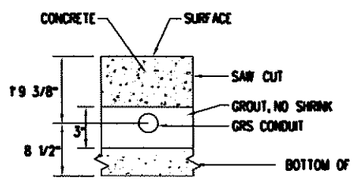

SECTION "D-D"
FOR CONCRETE SURFACE
TYPICAL

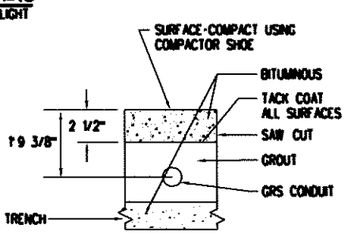

SECTION "D-D"
FOR ASPHALT SURFACE
TYPICAL

REV.	APPROVED DATE	DESCRIPTION	JCN	REDLINE DATE	AP'D

DEPARTMENT OF TRANSPORTATION
FEDERAL AVIATION ADMINISTRATION

FA-11500 MALSR WITH RMS SEMI-FLUSH LIGHTS. DETAILS FOR RUNWAY OVERRUN INSTALLATION

REVIEWED BY	SUBMITTED BY ORIGINAL DRAWING SIGNED BY:	APPROVED BY ORIGINAL DRAWING SIGNED BY:
	SETH COUSLAR	GARY SKILLICORN
	SYSTEM ENGINEER, ANI-	PLATFORM MANAGER, ANI-
	DESIGNED / ISSUED BY	DATE 07/31/98 JCN
	DRAWN	DRAWING NO D-6292-8 REV
	CHECKED	

SHANKS
STYLES
SPECIFICATIONS

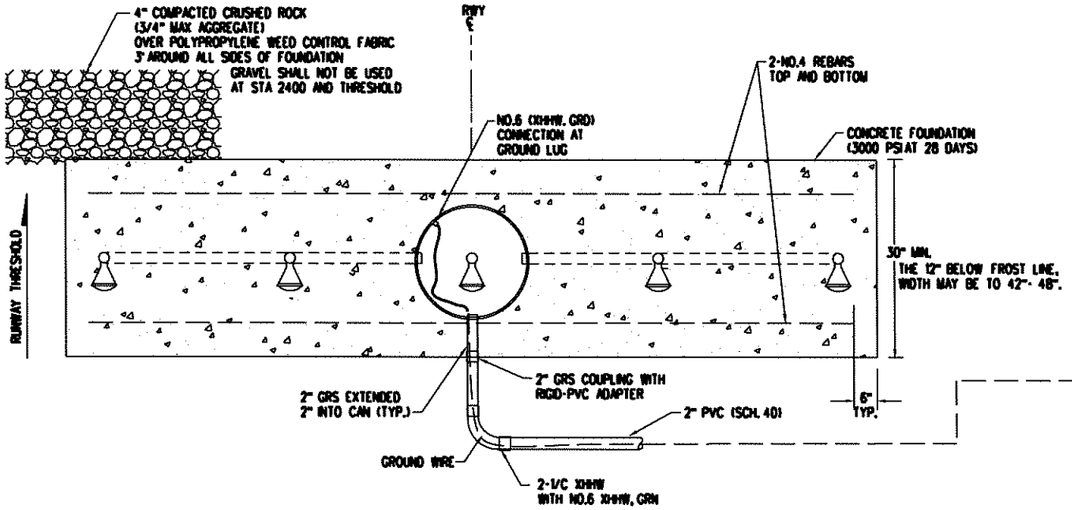

PLAN - 5 LIGHT FRANGIBLE BAR

SEE D-6292-14 FOR NON TILTING LIR STRUCTURE FOR 2'-6" TO 6'-0" HEIGHTS
NOT TO SCALE

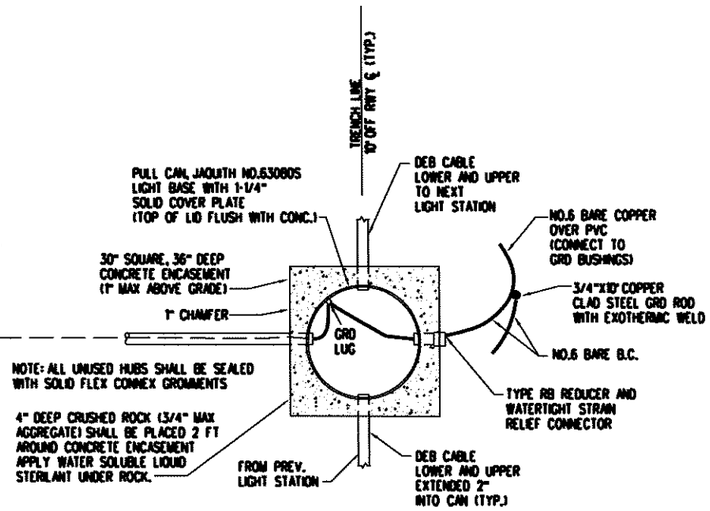

PULL CAN DETAIL

NOT TO SCALE

NOTES:

1A. THE POWER CABLES SHALL BE CONTINUOUS BETWEEN THE LIGHT STATIONS. WHERE SPLICES ARE REQUIRED, THE CONDUCTORS SHALL BE JOINED WITH COMPRESSION SOLDERLESS WIRE CONNECTORS SEALED AND INSULATED WITH HEAT SHRINK TUBING.

1B. "TEE" SPLICES FOR SPLICING THE NO.12 WIRES OF THE LOWER CABLE CONDUCTORS TO THE POWER SERVICE CABLES SHALL BE JOINED WITH SOLDERLESS WIRE CONNECTORS AND SEALED WITH SELF SEALING HEAT-SHRINKABLE TUBING.

2. LONG SECTIONS OF BURIED GUARD WIRES SHALL BE CONNECTED TO A GROUND ROD ON MAXIMUM 300' SPACING.

3. LEAVE 3 FEET SLACK IN EACH CABLE AT EACH LIGHT BAR.

4. FIELD ATTACHED CONNECTOR, L-823 PLUG AND RECEPTACLE (AC 150-5343-26A).

5. COUPLING THREADS TO BE CLEANED AND COATED WITH SILICONE ANTI-SEIZE COMPOUND.

6. SEE DRAWING D-6292-4 FOR ITEMS REFERENCED BY CIRCLED NUMBERS.

7. LIGHTS SHALL BE INSTALLED ON A SINGLE CONCRETE FOUNDATION INSTEAD OF A PIER OR PEDESTAL FOUNDATION.

8. CONNECTOR CLAMP PROVIDES FOR HOLDING LOWER SECTION OF L-823 WHILE REMOVING UPPER SECTION.

9. SIZE THE MALS CABLES TO GIVE A VOLTAGE AT THE LIGHT OF NOT LESS THAN 116.4V FOR 120W LAMPS, REGARDLESS OF THE WATTAGE OF THE LAMP SPECIFIED ON DETAIL "A". THIS WILL REQUIRE OVERSIZING THE CABLES FOR 60W LAMPS.

10. DRILL A HOLE IN THE CABLE CLAMP AND INSTALL A GREEN GROUND FROM GROUND LUG IN LIGHT BASE TO GROUND CONN. IN LAMP HOLDER USE MALE/FEMALE CRIMP-ON CONN. TO ALLOW NO.16 "GREEN" TO BE DISCONNECTED. SEE DETAIL "A" ON D6292-7.

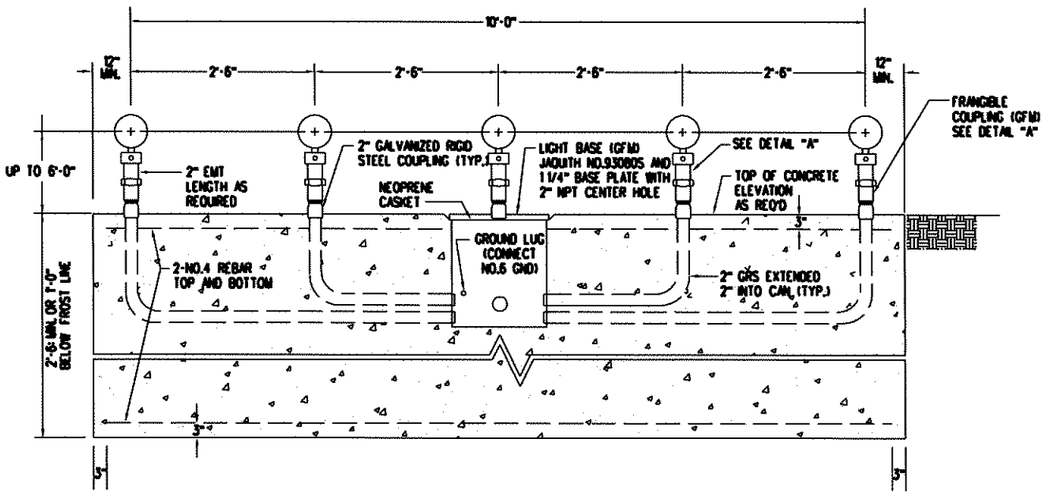

ELEVATION VIEW

NOT TO SCALE

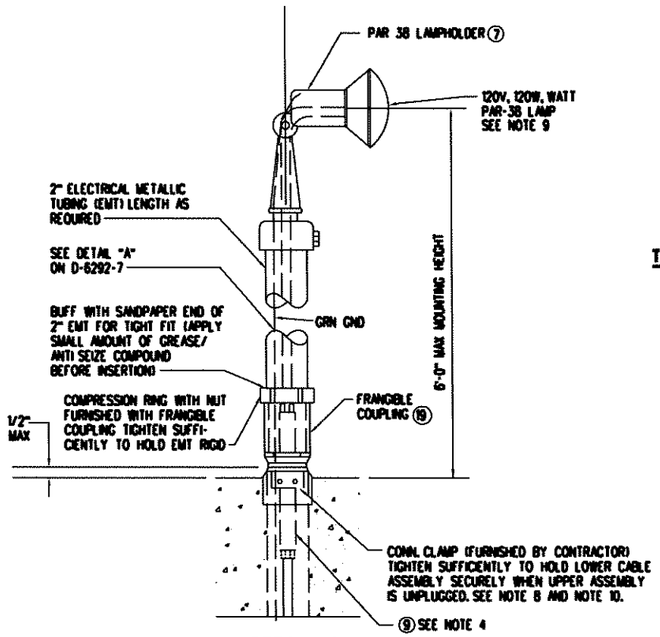

DETAIL "A"

FOR STEADY BURNING LIGHTS
NOT TO SCALE

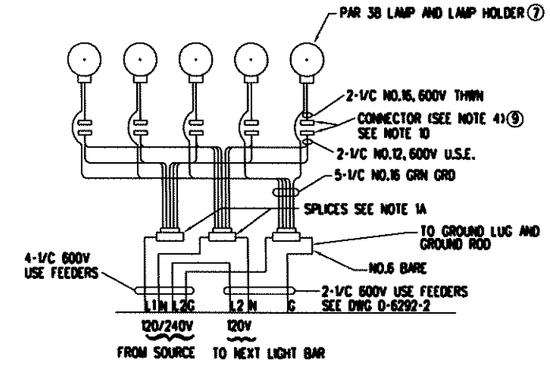

TYPICAL CONNECTIONS FOR FRANGIBLE LIGHT BAR

REV	APPROVED DATE	DESCRIPTION	JCN	REDLINE DATE	APVD

DEPARTMENT OF TRANSPORTATION
FEDERAL AVIATION ADMINISTRATION

FA-11500 MALSR WITH RMS UP TO 6'-0" MOUNTING HEIGHT FRANGIBLE LIGHT BAR

REVIEWED BY	SUBMITTED BY: ORIGINAL DRAWING SIGNED BY: SETH COUSLAR, SYSTEM ENGINEER, AN-	APPROVED BY: ORIGINAL DRAWING SIGNED BY: GARY SKILLICORN, PLATFORM MANAGER, AN-
	DESIGNED / ISSUED BY	DATE 07/31/98, JCN
	DRAWN	DRAWING NO D-6292-9, REV
	CHECKED	

STYLES: SHADES, STYLES, STATES

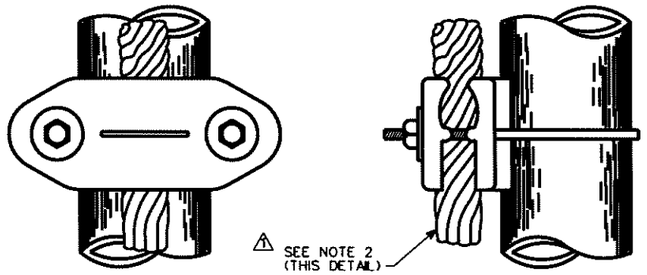

MATERIAL:
CASTING - BRONZE ALLOY
HARDWARE - SILICON BRONZE OR STAINLESS STEEL

SOURCES:
A. BURNDY "GAR" TYPE
B. THOMPSON NO.800 SERIES
C. ANDERSON CONNECTOR "GC" TYPE
D. OR APPROVED EQUAL

NOTES:
1. TWO EACH U-BOLT CLAMPS TO BE USED TO ATTACH AIR TERMINALS TO PIPE STANDARDS.
⚠ 2. USE PROPER SIZE U-BOLT CLAMP TO FIT CABLE AND PIPE.

U-BOLT TYPE CLAMP

DOWN CONDUCTOR OR AIR TERMINAL TO PIPE TOWER LEG AND PIPE STANDARD

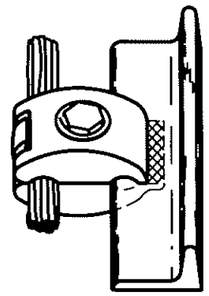

MATERIAL: CAST BRONZE
HARDWARE: SILICONE BRONZE OR STAINLESS STEEL

SOURCES:
1. THOMPSON NO.142
2. INDEPENDENT NO.298A
3. ROBBINS 68X
4. A-C NO.C559

ANGLE TYPE CLAMP

DOWN CONDUCTOR TO ANGLE OR CHANNEL IRON

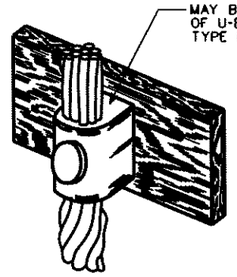

TYPE VV

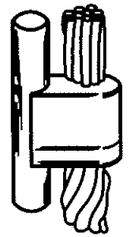

TYPE GP

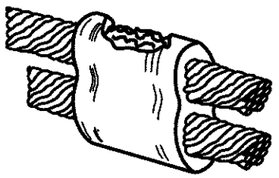

TYPE PT

EXOTHERMIC WELD NOTES:
1. DUXSEAL, MADE BY JOHNS-MANVILLE, SHALL BE USED TO SEAL AROUND EACH CABLE ON OUTSIDE OF THE MOLD FOR ALL CABLE CONNECTIONS.
2. THE CABLES SHALL BE CLEANED WITH A WIRE BRUSH AND CLAMPED TO PREVENT THEIR MOVEMENT FROM MOLD PRIOR TO SHOOTING WELD.
3. MOLDS ARE TO BE OF THE TYPE APPROVED FOR PROPER CONNECTION AND CLEANED PRIOR TO SHOT. MOLD SHALL BE DRIED WITH PROPANE TORCH BEFORE USING.
4. MOLDS SHALL NOT BE MODIFIED.

EXOTHERMIC WELD CONNECTIONS

RECOMMENDED EXOTHERMIC WELD COMPONENTS

REQUIRED CABLE CONNECTION	MOLD	WELD METAL
THOMPSON NO.32 TO GND. ROD	GPR-188C	250
THOMPSON NO.32 TO NO.32	PTC-8C8C	150
SOLID AWG NO.2 TO NO.32	PTC-8C1T	90
STRANDED AWG NO.2 TO NO.32	PTC-8C1V	115
STRANDED AWG NO.4/0 TO NO.32	PTC-2Q8C	150
STRANDED AWG NO.4/0 TO NO.28R	PTC-2Q8D	200
THOMPSON 28R TO GROUND ROD	GPR-188D	250
STRANDED AWG NO.4/0 TO NO.4/0	PTC-2Q2Q	200
THOMPSON NO.28R TO NO.28R	PTC-8D8D	200
STRANDED AWG NO.4/0 TO AWG NO.2	PTC-2Q1V	150
STRANDED AWG NO.4/0 TO GND. ROD	GPR-182Q	250
NO.32 TO VERTICAL STEEL	VVR8C	200 (SEE NOTE 2)
NO.28R TO VERTICAL STEEL	VVR8D	2-150 (SEE NOTE 2)

NOTES:
1. DELETED
2. FOR CABLE TO STEEL PIPE, ADD PIPE DIRECTION AND NORMAL PIPE SIZE TO VV MOLD NUMBER.

EQUIVALENT CATALOG NUMBERS FOR THOMPSON, ROBBINS, AND A/C CABLE
a. THOMPSON NO.32 = ROBBINS NO.1 = A/C C-122
b. THOMPSON NO.28R = ROBBINS NO.604 = A/C C-126

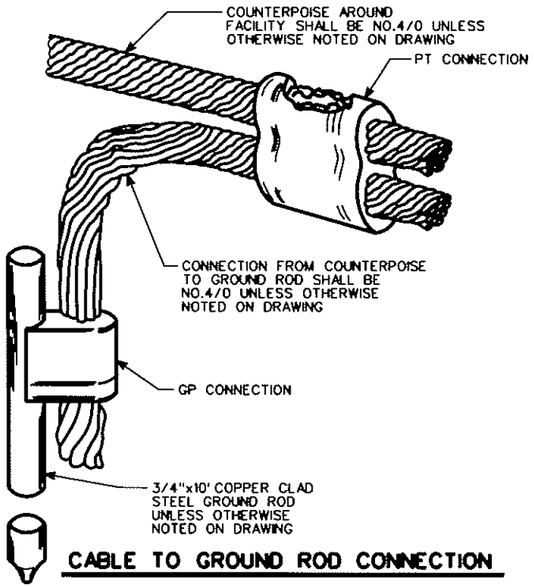

CABLE TO GROUND ROD CONNECTION

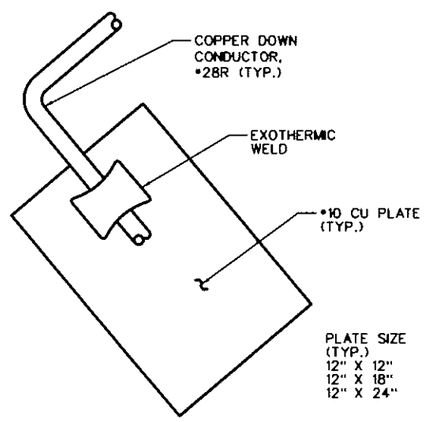

⚠

GROUNDING TERMINATIONS WHERE USE OF GROUND RODS ARE IMPRACTICAL

N.T.S.

TYPICAL DOWN CONDUCTOR INSTALLED CONFIGURATION

N.T.S.

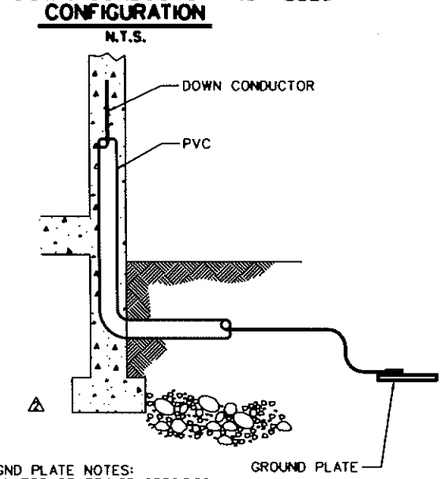

GND PLATE NOTES:
UNLESS OTHERWISE SPECIFIED:
1. FIELD-MADE GND PLATE SIZE MAY VARY.
2. RUNDOWN CONDUCTOR IN PVC TO GND PLATE DEPTH.
3. EXOTHERMICALLY WELD ALL CONNECTIONS MADE TO THE CU PLATE.

DEPARTMENT OF TRANSPORTATION
FEDERAL AVIATION ADMINISTRATION
SOUTHWEST REGION — FORT WORTH, TEXAS

GROUNDING STANDARDS TYPICAL CONNECTIONS

SUBMITTED: ORIGINAL SIGNED BY: CHRISTIAN C. CALLAHAN for	APPROVED: ORIGINAL SIGNED BY: G. R. RIVERA
SUPERVISOR OF SECTION, ASW-454	MANAGER OF BRANCH, ASW-450
DESIGNED: JACK PARKER	DATE: 04-19-96
DELIVERED:	ISSUED BY: AIRWAY FACILITIES DIVISION
DRG. APP.: JAP / JLM 06-19-96	DRAWING NUMBER: SWSD-GROUNDING-E02-02
FACILITY:	

REV.	DATE	DESCRIPTION	DFTG.	CHECKED
⚠	02-02-96	ADDED DETAIL	RWD	B.R.F.
⚠	06-07-95	GENERAL REVISIONS	JLM	B.R.F.

REF. DWG. :

CAEG FILENAME: swsd-grounding-e02-02
PLOT SCALE FACTOR: 1

$USERNAME$ $TIME$ $FILE$
$FILE ABBREV$

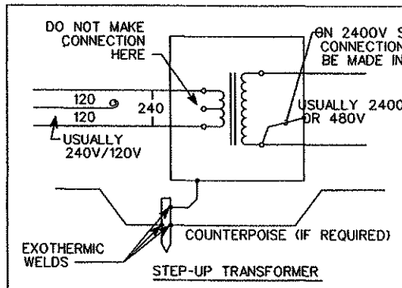

STEP-UP TRANSFORMER

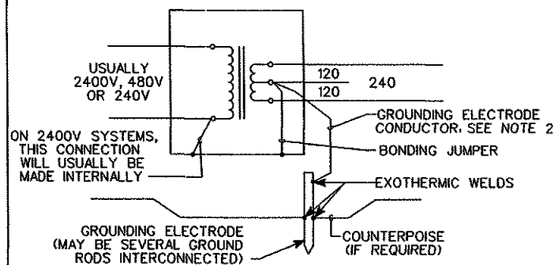

STEP-DOWN OR ISOLATION TRANSFORMER

DISTRIBUTION TRANSFORMER GROUNDING

SINGLE PHASE OR THREE PHASE
SINGLE PHASE SHOWN
NO SCALE

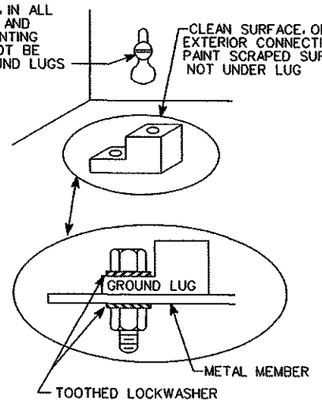

GROUND LUG DETAIL

NOT TO SCALE

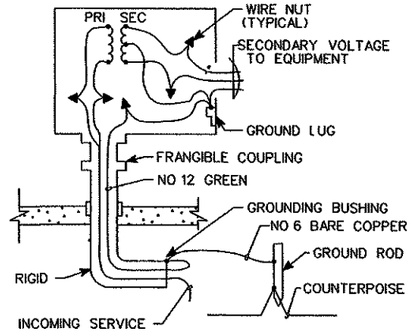

STEP-DOWN TRANSFORMER MOUNTED ON FRANGIBLE COUPLING

NOT TO SCALE

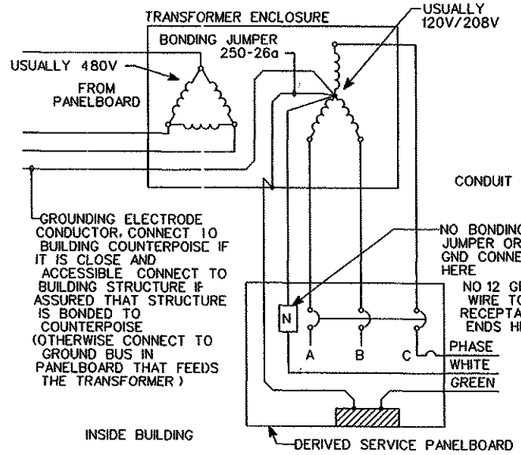

GROUNDING SEPARATELY DERIVED A C WITHIN THE SYSTEM

SINGLE PHASE OR THREE PHASE
THREE PHASE SHOWN
NO SCALE

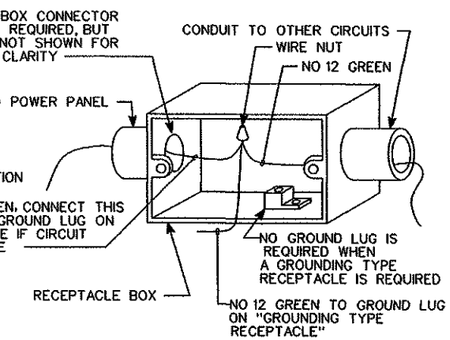

GROUNDING RECEPTACLE DETAIL

NOT TO SCALE

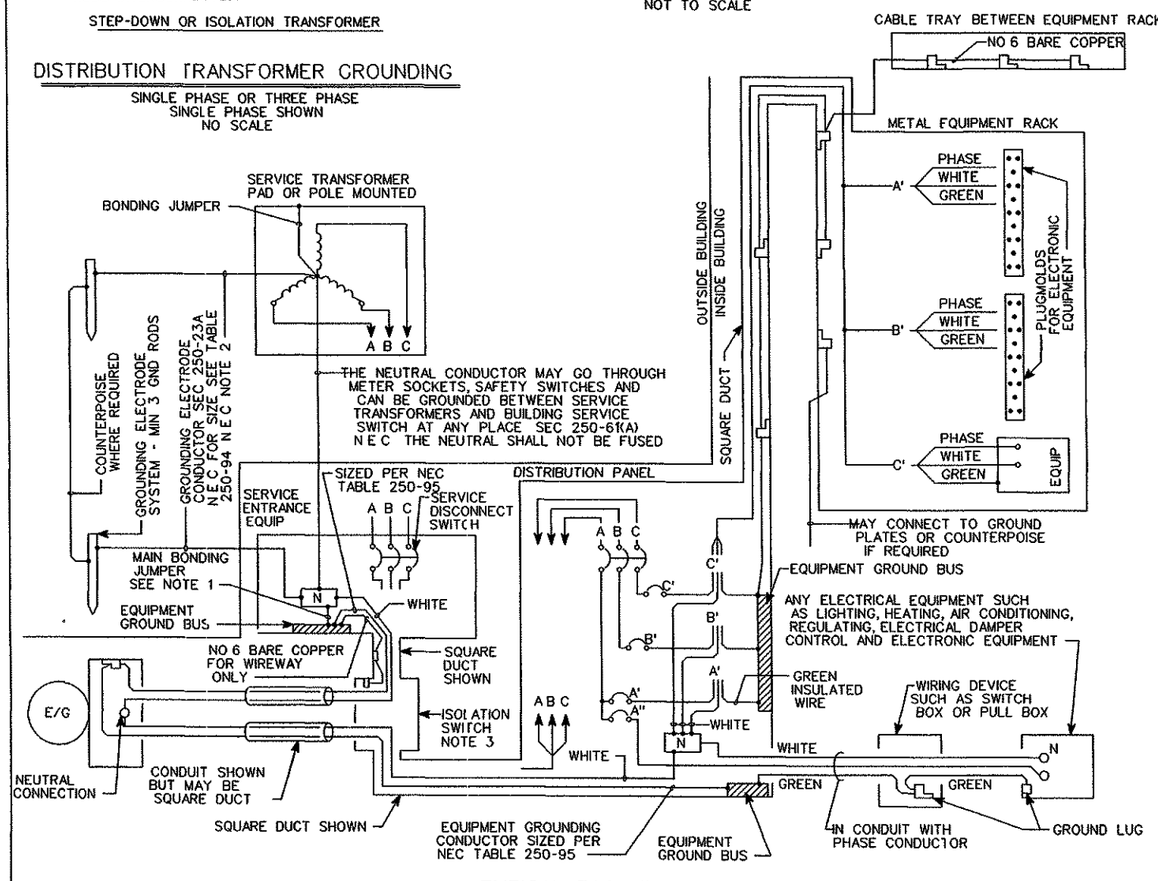

TYPICAL FACILITY GROUNDING SKETCH
3 PHASE SHOWN

NO SCALE

MANY FAA FACILITIES USE SQUARE DUCT BETWEEN SERVICE ENTRANCE SWITCH AND DISTRIBUTION POWER PANEL ON 200A SERVICE AND LESS

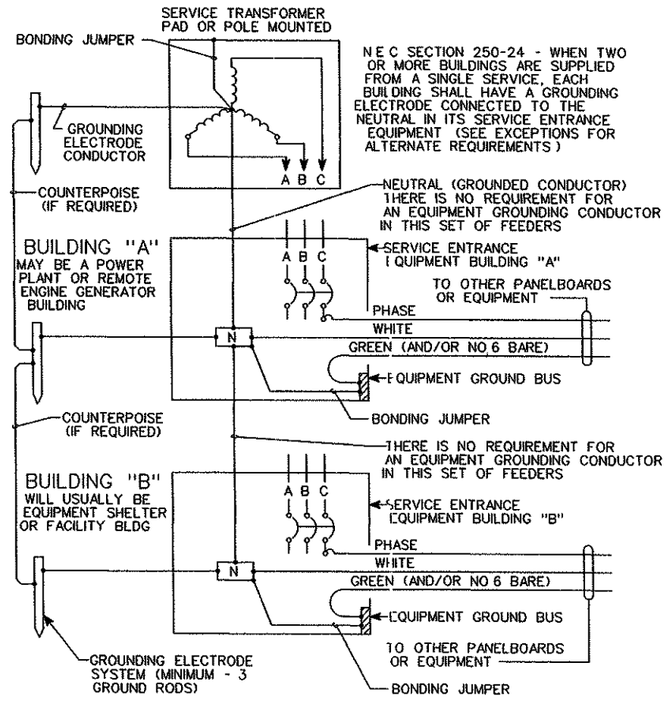

SERVICE GROUNDING
TWO OR MORE BUILDINGS

SERVICE SINGLE-PHASE OR THREE PHASE
NO SCALE

N E C SECTION 250-24 - WHEN TWO OR MORE BUILDINGS ARE SUPPLIED FROM A SINGLE SERVICE, EACH BUILDING SHALL HAVE A GROUNDING ELECTRODE CONNECTED TO THE NEUTRAL IN ITS SERVICE ENTRANCE EQUIPMENT (SEE EXCEPTIONS FOR ALTERNATE REQUIREMENTS)

NOTES

1. MAIN BONDING JUMPER CONNECTS THE GROUNDED CONDUCTOR (NEUTRAL), THE SERVICE EQUIPMENT ENCLOSURE AND THE EQUIPMENT GROUND BUS TOGETHER BONDING JUMPER MAY BE A WIRE, A BUS OR A SCREW
2. GROUNDING ELECTRODE CONDUCTOR SHALL BE CONNECTED TO THE AC SYSTEM GROUNDED CONDUCTOR (NEUTRAL) IT SHALL RUN DIRECTLY TO THE GROUNDING ELECTRODE SYSTEM WITHOUT SPLICE AND SHALL BE PROTECTED FROM MECHANICAL DAMAGE
3. THE ENCLOSURE OF THE ISOLATION SWITCH SHOULD NOT BE USED AS AN EXTENSION OF THE NEUTRAL BUS IN THE SERVICE ENTRANCE EQUIPMENT HOWEVER, ON PRE-WIRED STANDBY SYSTEMS WHERE THIS HAS BEEN DONE AND APPROVED AT THE NATIONAL LEVEL, NO ACTION SHOULD BE TAKEN TO CHANGE THE WIRING
4. THIS DRAWING DOES NOT REQUIRE THAT EXISTING FACILITIES BE CHANGED USE THIS DRAWING ON NEW FACILITIES AND WHEN WORK IS BEING DONE ON EXISTING FACILITIES
5. THIS DRAWING SHALL NOT GOVERN OVER SPECIAL REQUIREMENTS SHOWN ON INDIVIDUAL FACILITY DRAWINGS

REV	DATE	DESCRIPTION	DFTG	CHECKED
1	07-24-00	AS-BUILT PER CONTRACTOR MARK-UP	EP	AR

DEPARTMENT OF TRANSPORTATION
FEDERAL AVIATION ADMINISTRATION
SOUTHWEST REGION — FORT WORTH TEXAS

GROUNDING STANDARDS POWER SERVICE DETAILS

SUBMITTED ORIGINAL SIGNED BY	APPROVED ORIGINAL SIGNED BY:
C.C. CALLAHAN ASW-451	G.R. RIVERIA ASW-450A
SUPERVISOR OF SECTION ASW-451	MANAGER, OF BRANCH, ASW 450

DESIGNED JACK PARKER	ISSUED BY	DATE 5/18/92
REVIEWED	AIRWAY FACILITIES DIVISION	DRAWING NUMBER
DRG DFT J FISCHER/K SOM		SWSD-GROUNDING-E03-01
FACILITY:		

CAEG FILENAME swsd-grounding-e03
PLOT SCALE FACTOR 1

REF DWG

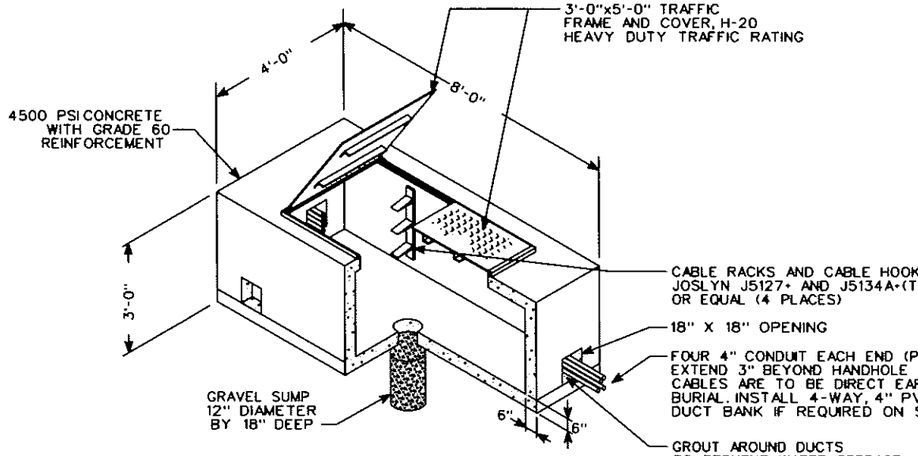

PREFABRICATED CONCRETE MANHOLE - TYPE A

NOT TO SCALE

DALWORTH QUICKSET MODEL 408-1 OR EQUAL
PROVIDE 6" SUMP DRAIN AND (8) EACH KNOCKOUTS.
DALWORTH QUICKSET CO., ARLINGTON, TX
(817) 640-9751

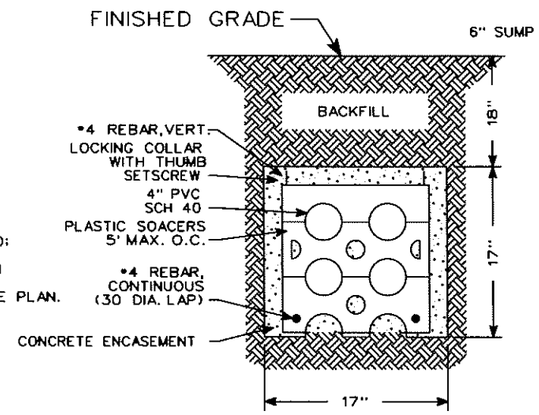

TYPICAL 4-WAY 4" PVC DUCT BANK

NOT TO SCALE

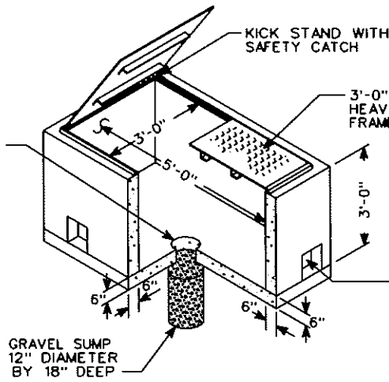

PREFABRICATED CONCRETE MANHOLE - TYPE B

NOT TO SCALE

GRADE 60 REINFORCEMENT 4500 PSI CONCRETE, CATALOG NO. 305-1 BY DALWORTH QUICKSET CO. ARLINGTON, TX, OR APPROVED EQUAL

NOTES:

1. INSTALL CABLE RACKS AND CABLE HOOKS, JOSLYN J5127 AND J5132A*(T) OR EQUAL ON EACH 5' WALL.

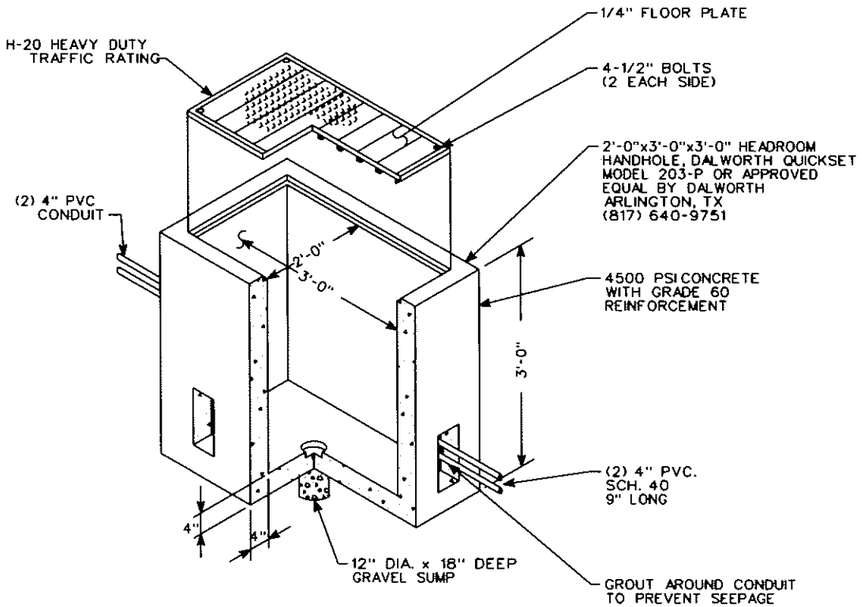

PREFABRICATED CONCRETE PULL BOX

NOT TO SCALE

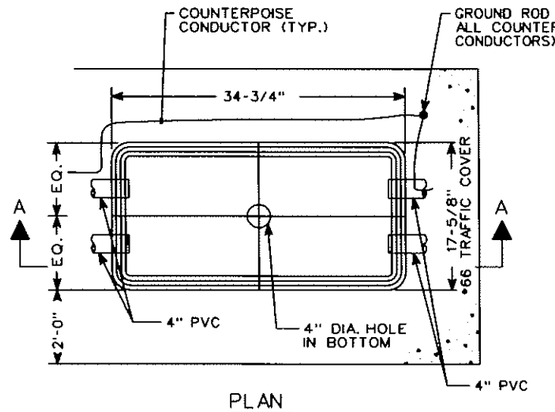

PLAN

NOT TO SCALE

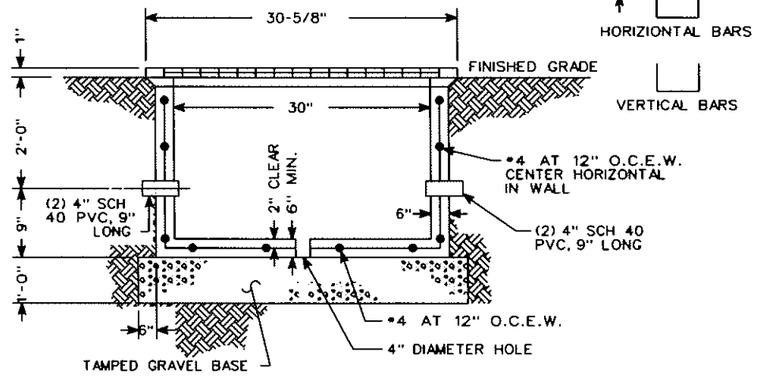

SECTION A-A

NOT TO SCALE

CAST IN PLACE CONCRETE PULL BOX

NOTES:

1. EACH CABLE SHALL BE IDENTIFIED WITH BRADY WIRE MARKER GIVING CIRCUIT NUMBER (*PWC-PK-6 OR APPROVED EQUAL)
2. ALL CABLE THROUGH BOX SHALL HAVE SUFFICIENT SLACK SO CABLE CAN BE BROUGHT TO SURFACE FOR SPLICING.
3. COVER AND PULL BOX SHALL BE DESIGNED TO CARRY A 24"x10" WHEEL FOOT PRINT AT 60 PSI FOR A TOTAL WHEEL LOAD OF H-20.
4. GROUND ROD INSIDE OF PULL BOX SHALL BE DRIVEN PRIOR TO PLACEMENT OF BOX AND CAST IN BOTTOM OF BOX. IT WILL NOT BE CONNECTED TO ANY CIRCUIT.
5. GROUND ROD INSIDE OF PULL BOX WILL NOT BE TESTED RESISTIVITY.

DEPARTMENT OF TRANSPORTATION
FEDERAL AVIATION ADMINISTRATION
SOUTHWEST REGION — FORT WORTH, TEXAS

NAVAIDS
CONSTRUCTION STANDARDS
MANHOLES, PULL BOXES
AND DUCT BANKS

SUBMITTED	APPROVED
SUPERVISOR OF SECTION, ASW-464	MANAGER OF BRANCH, ASW-460

REV.	DATE	DESCRIPTION	DFTR.	CHECKED

DESIGNED: P.BURNS
REVIEWED:
CHRG. OFF.: J.FISCHER
FACILITY:

ISSUED BY AIRWAY FACILITIES DIVISION

DRAWING NUMBER: SWSD-NAVAIDS-C04

CAEG FILENAME: swsd-navaids-c04
PLOT SCALE FACTOR: 1

REF. DWG. :

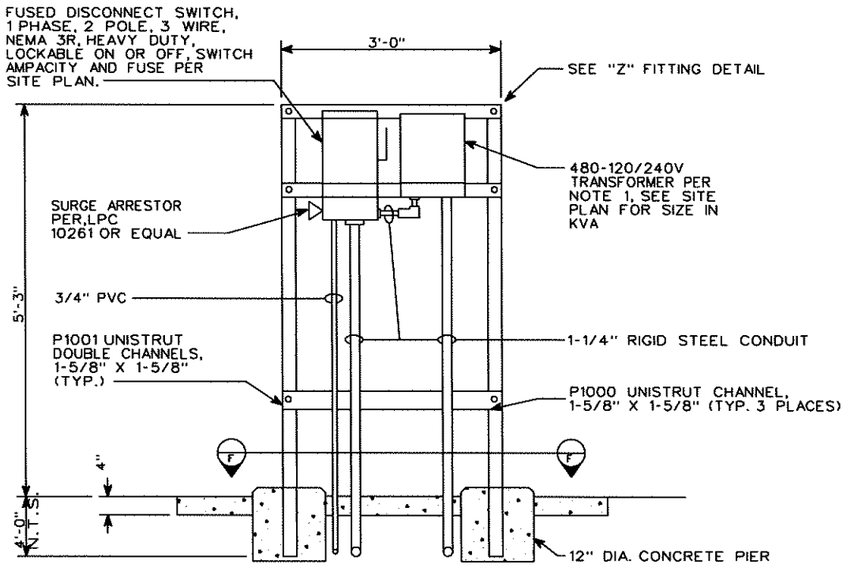

DETAIL "A"

600V SWITCH & TRANSFORMER (480-120/240V) RACK

SCALE: 1"=1'-0" 0 1 2

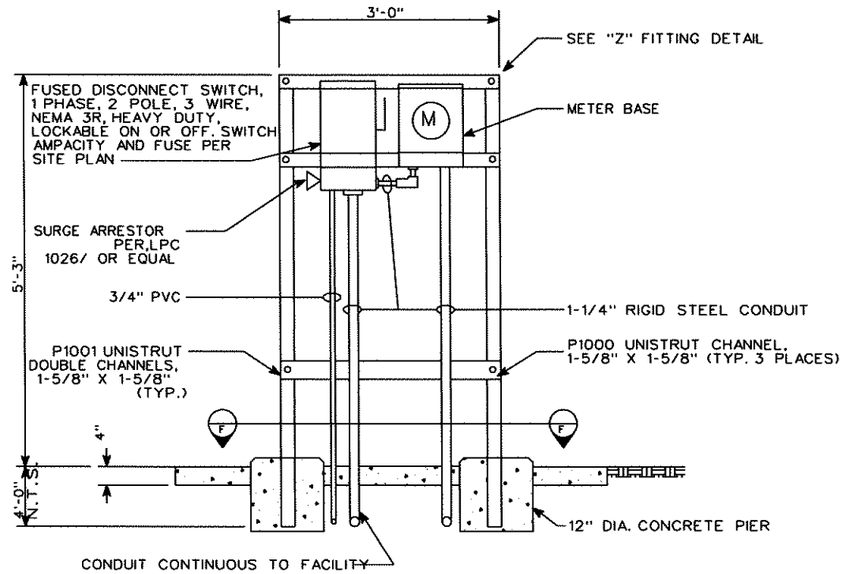

DETAIL "B"

120/240V SWITCH & METER RACK

SCALE: 1"=1'-0" 0 1 2

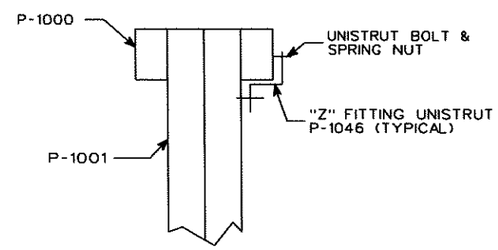

"Z" FITTING DETAIL

N.T.S.

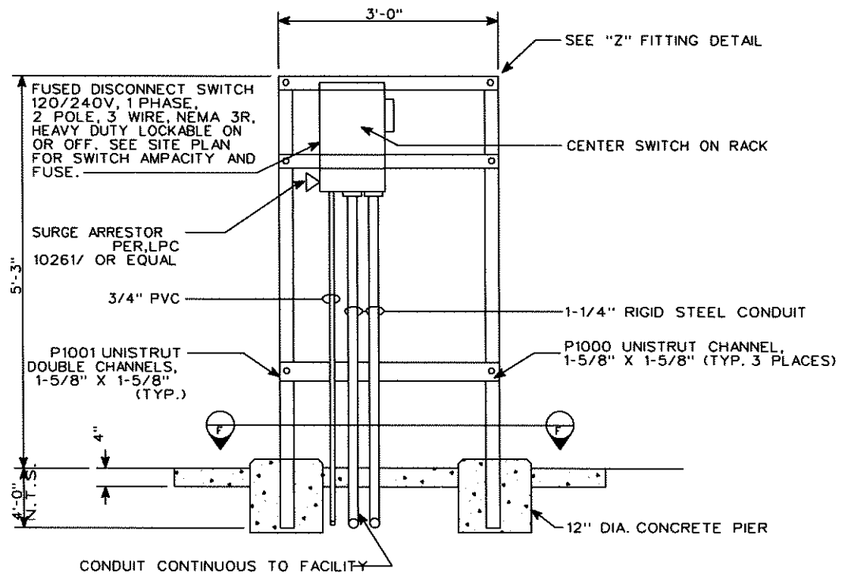

DETAIL "C"

120/240V SWITCH RACK

SCALE: 1"=1'-0" 0 1 2

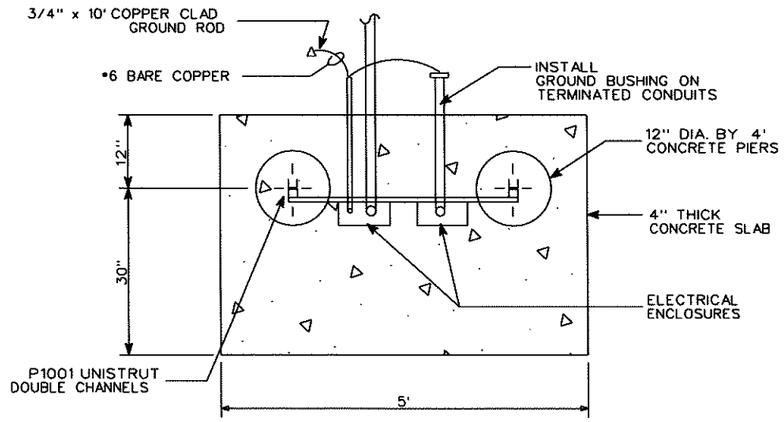

SECTION "F-F"

0 1 2

SCALE IN FEET

NOTES:

1. TRANSFORMER SHALL BE U.L. RATED FOR OUTDOOR MOUNTING WITH (2) 2-1/2 ½ TAPS ABOVE NORMAL AND (2) 2-1/2 ½ TAPS BELOW NORMAL FULL CAPACITY.

DEPARTMENT OF TRANSPORTATION
FEDERAL AVIATION ADMINISTRATION
SOUTHWEST REGION — FORT WORTH, TEXAS

NAVAIDS CONSTRUCTION STANDARDS ELECTRICAL DETAILS

REV.	DATE	DESCRIPTION	DFTG.	CHECKED

SUBMITTED: | APPROVED:

SUPERVISOR OF SECTION, ASW-454 | MANAGER OF BRANCH, ASW-450

DESIGNED P. BURNS
REVIEWED:
DRG. DFT.: R. McCRAY
FACILITY:

ISSUED BY AIRWAY FACILITIES DIVISION

DATE:
DRAWING NUMBER: SWSD-NAVAIDS-E01

REF. DWG. :

CAEG FILENAME: swsd-navaids-e01
PLOT SCALE FACTOR: 1

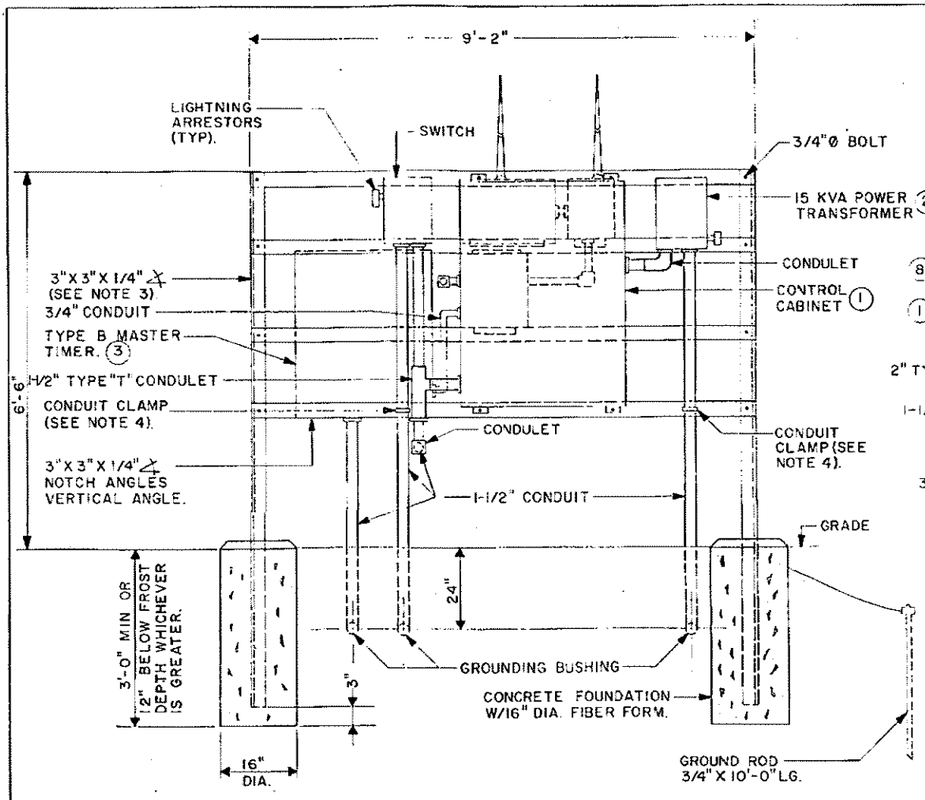

FRONT ELEVATION OF POWER & CONTROL STATION

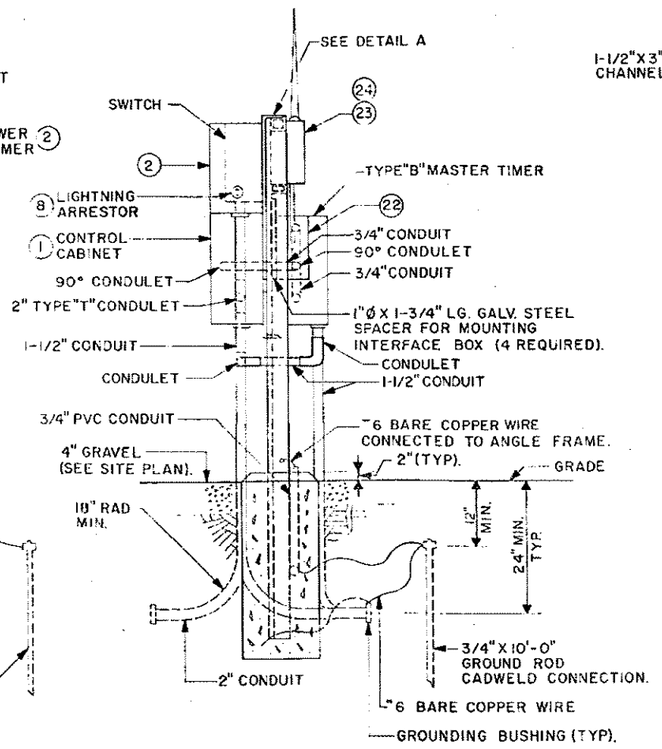

SIDE ELEVATION OF POWER & CONTROL STATION

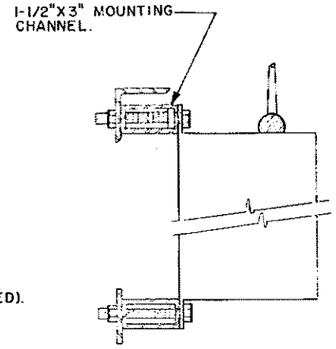

MOUNTING DETAIL "A"

(FOR AIR-GROUND CONTROLLER & GRD. TO GRD. DECODER).

NOTES:

1. FOR LOCATION OF POWER & CONTROL STATION SEE SITE PLAN.
2. CONDUITS & NIPPLES SHALL BE IN SIZES SHOWN & SHALL BE GALVANIZED. TERMINATE EACH CONDUIT & EACH NIPPLE IN A GROUNDED INSULATED BUSHING. USE TWO LOCKNUTS AT EACH ENTRANCE INTO CABINETS.
3. 3"X3"X1/4" ANGLES SHALL BE BOLTED SECURELY USING 3/4"Ø BOLTS, NUTS & LOCKWASHERS. ADDITIONAL ANGLES AND/OR STRAPS SHALL BE USED & POSITIONED AS REQUIRED TO FIRMLY MOUNT ALL EQUIPMENT TO FRAME.
4. CONDUITS SHALL BE SECURED TO ANGLES WITH "U" CLAMPS AND SPACERS WHEN REQUIRED FOR RIGIDITY.
5. POWER DISCONNECT SWITCH, 240 VOLT, 100 AMP, 3 WIRE WITH NEUTRAL LUG IN NEMA RAINTIGHT ENCLOSURE. NEMA TYPE H.D. LOCKABLE TYPE, NON-FUSIBLE.
6. GROUND-TO-GROUND CONTROL-INSTALL THE RECEIVER ON EITHER SIDE OF THE CONTROL CABINET AS DESIRED.
7. AIR-TO-GROUND CONTROL-INSTALL THE RECEIVER ON EITHER SIDE OF THE CONTROL CABINET AS DESIRED.
8. GROUND-TO-GROUND AND AIR-TO-GROUND-INSTALL THE RECEIVER-DECODER, THE INTERFACE BOX, AND THE RECEIVER CONTROLLER.
9. SEE DRAWING D-6213-2 FOR ITEMS REFFERENCED BY CIRCLED NUMBERS.

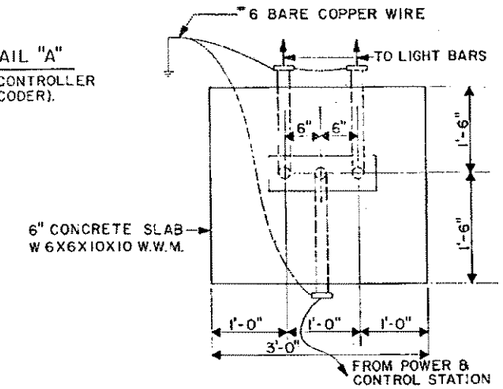

PLAN

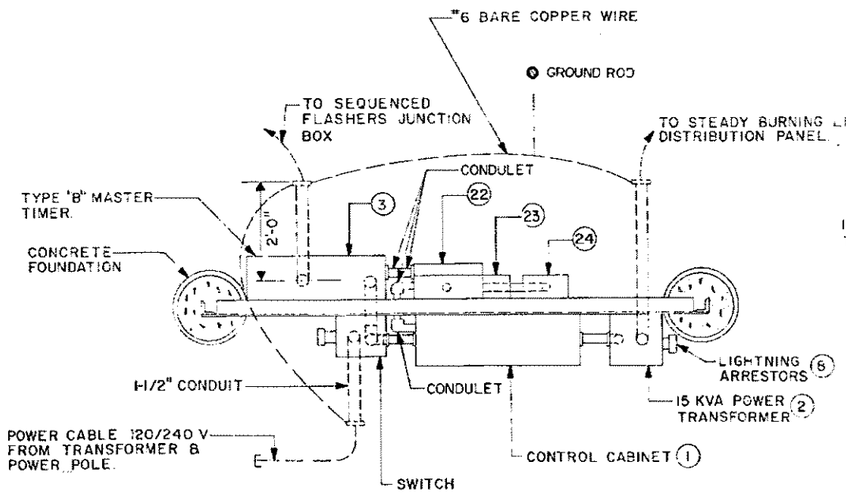

PLAN OF POWER CONTROL STATION

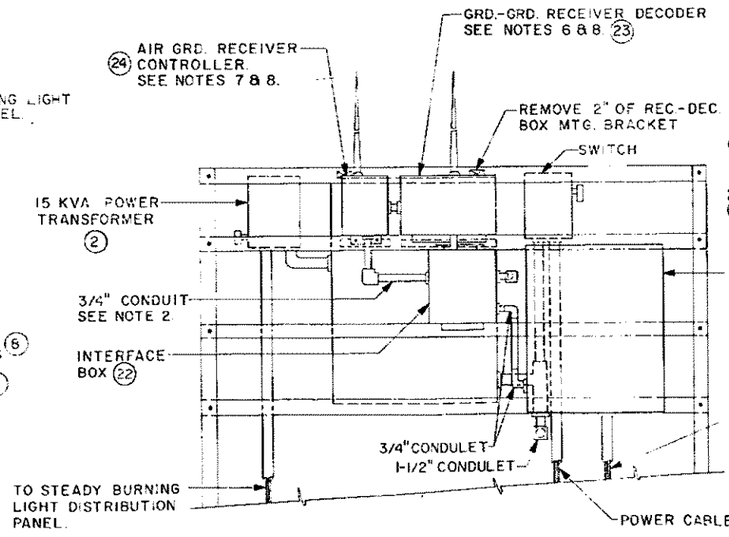

PART OF REAR ELEVATION OF POWER & CONTROL STATION

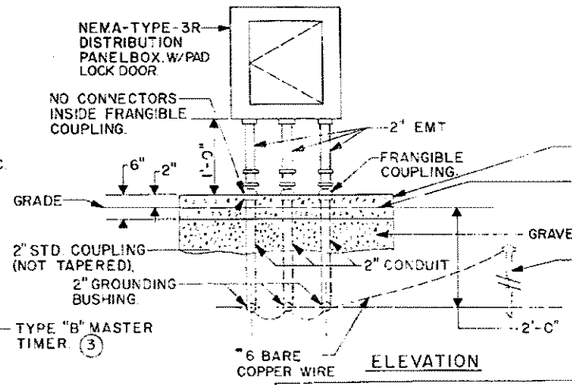

ELEVATION

REMOTE RADIO CONTROL SYSTEM

REV. LTR.	DATE	DESCRIPTION	CHECKED / APPROVED

DEPARTMENT OF TRANSPORTATION
FEDERAL AVIATION ADMINISTRATION
WASHINGTON, D.C. 20591

MALS R W/THRESHOLD LIGHTS
LOW IMPACT RESISTANT STRUCTURE
POWER AND CONTROL STATION
EQUIPMENT MOUNTING DETAILS

REVIEWED BY	SUBMITTED BY	APPROVED BY
	A. FROEHLICH	F. GILMORE
DESIGNED BY	ISSUED BY: AIRWAY FACILITIES SERVICE	DATE: SEPTEMBER 1, 19
DRAWN BY		DRAWING NO. D-6213-4
CHECKED BY		REV. LTR.

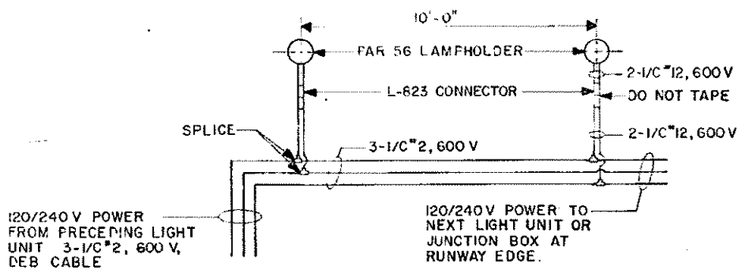

WIRING DIAGRAM FOR TWO LIGHTS

TYPICAL FOR ANY NUMBER OF UNITS (GROUNDING CONDUCTOR NOT SHOWN)

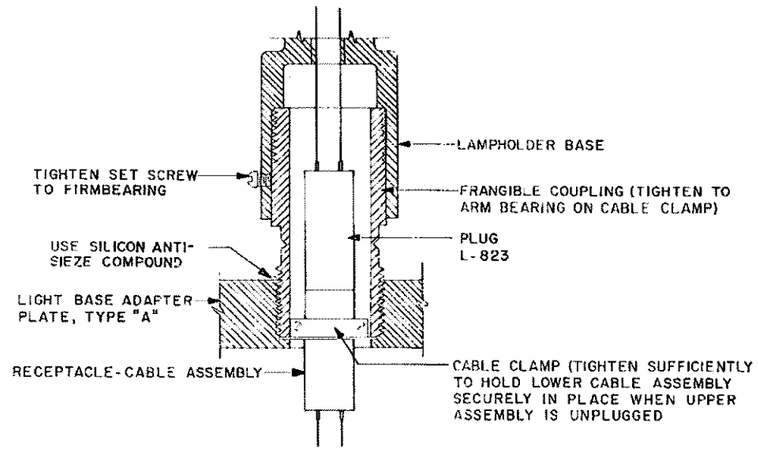

DETAIL "A"

GROUND MOUNTING

NOTES:

1. ALL LAMP BASES(CANS)SHALL BE GROUNDED AS SHOWN IN SECTION "A-A". THE GROUND WIRE SHALL BE RUN THROUGH EACH BASE IN THE LIGHT BARS AND GROUNDED AT EACH CAN TO THE #6 BARE COPPER COUNTERPOISE. SEE DWG. D-6213-2 FOR LOCATION OF COUNTERPOISE GROUND RODS.
2. CONCRETE FOUNDATION TO HAVE A MINIMUM DEPTH OF 2'-6" OR BE BELOW LOCAL FROST LINE, WHICH EVER DEPTH IS GREATER.
3. THE TOP OF THE LIGHT BASE FLANGE SHALL BE RECESSED 1 3/8" BELOW THE CONCRETE SURFACE OF THE FOUNDATION TO PERMIT THE INSTALLATION OF THE GASKET AND ADAPTER PLATE (TYPE "A") SHALL BE FLUSH WITH PAD SURFACE AFTER INSTALLATION.
4. EVERY OTHER LIGHT CONNECTS TO ALTERNATE CIRCUIT IN THE THRESHOLD BAR.

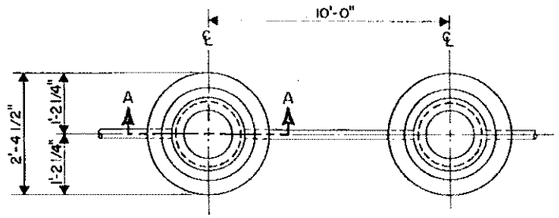

PLAN

SCALE 3/4"=1'-0"

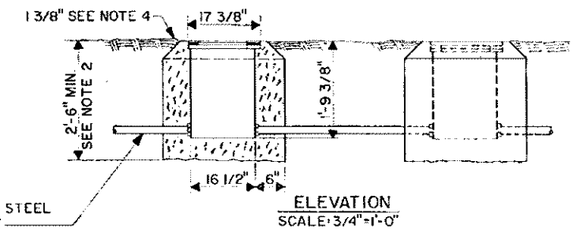

ELEVATION

SCALE 3/4"=1'-0"

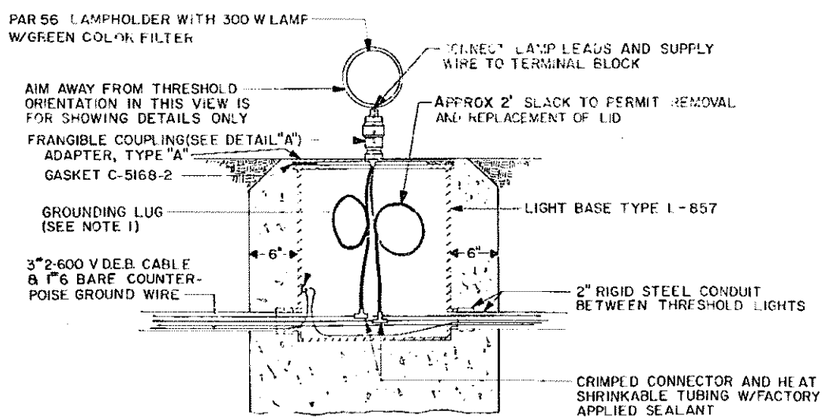

SECTION "A-A"

ELECTRICAL DETAILS OF A SINGLE UNIT

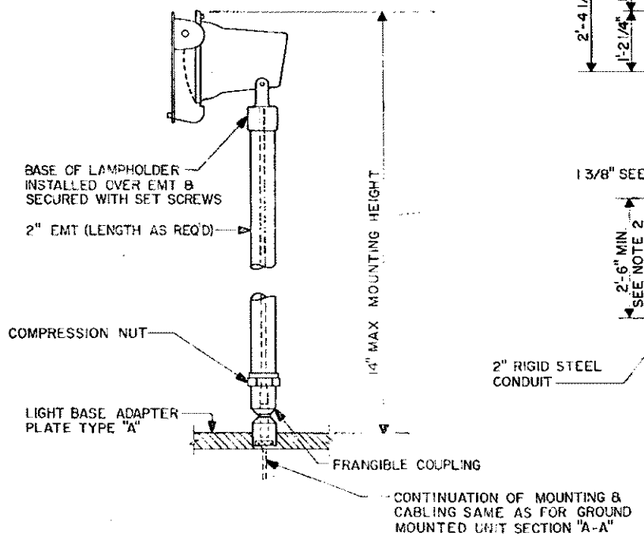

DETAIL "C"

ELEVATED MOUNTING

REV. LTR	DATE	DESCRIPTION	CHECKED	APPROVED

DEPARTMENT OF TRANSPORTATION
FEDERAL AVIATION ADMINISTRATION
WASHINGTON, D.C. 20591

MALSR W/THRESHOLD LIGHTS AND LOW IMPACT RESISTANT STRUCTURE THRESHOLD LIGHT DETAILS

REVIEWED BY	SUBMITTED BY: A. FROEHLICH	APPROVED BY: F. GILMORE	
DESIGNED BY	ISSUED BY: AIRWAY FACILITIES SERVICE	DATE	REV LTR
DRAWN BY		DRAWING NO: D-6213-5	
CHECKED BY			

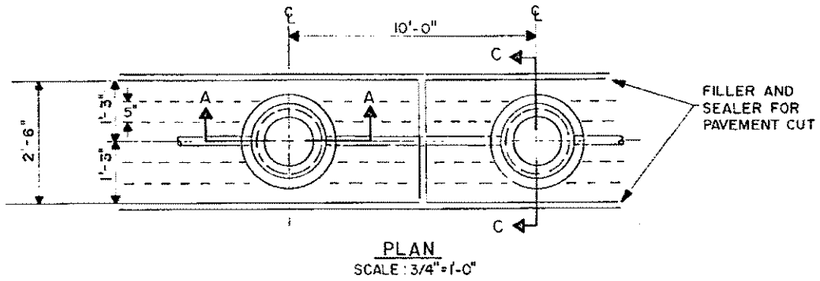

PLAN

SCALE : 3/4" = 1'-0"

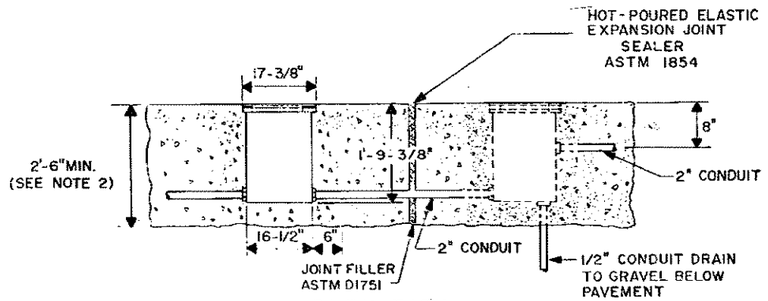

ELEVATION

SCALE 3/4" = 1'-0"

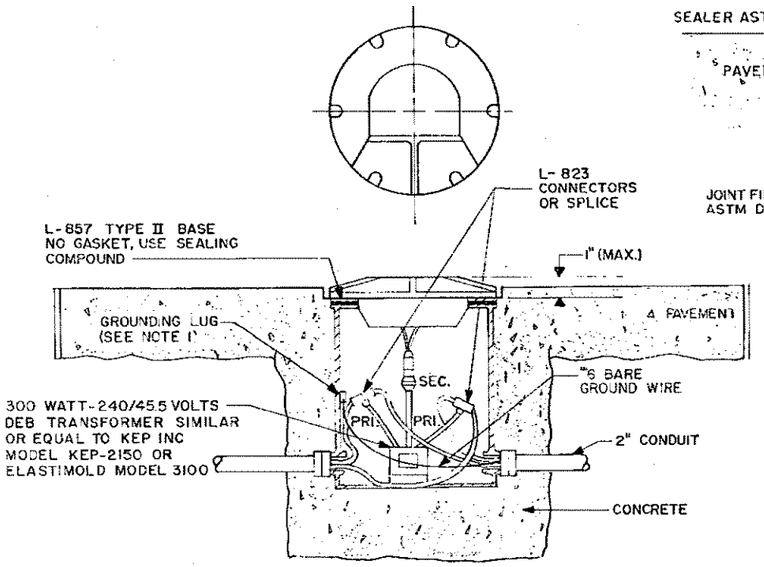

SEMI-FLUSH THRESHOLD FIXTURE

L-850 E

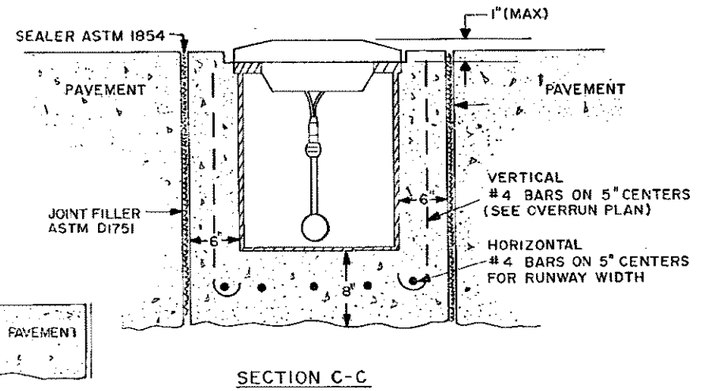

SECTION C-C

NOTES:

1. ALL LAMP BASES (CANS) SHALL BE GROUNDED AS SHOWN IN DETAIL "E". THE GROUND WIRE SHALL BE RUN THROUGH EACH BASE IN THE LIGHT BARS AND GROUNDED AT EACH CAN TO THE #6 BARE COPPER COUNTERPOISE. SEE DWG. D-6213-2 FOR LOCATION OF COUNTERPOISE GROUND RODS.
2. CONCRETE FOUNDATION TO HAVE A MINIMUM DEPTH OF 2'-6" OR BE BELOW LOCAL FROST LINE, WHICH EVER DEPTH IS GREATER.

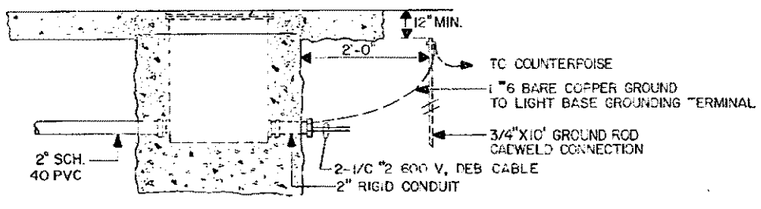

SECTION "A-A"

END UNIT

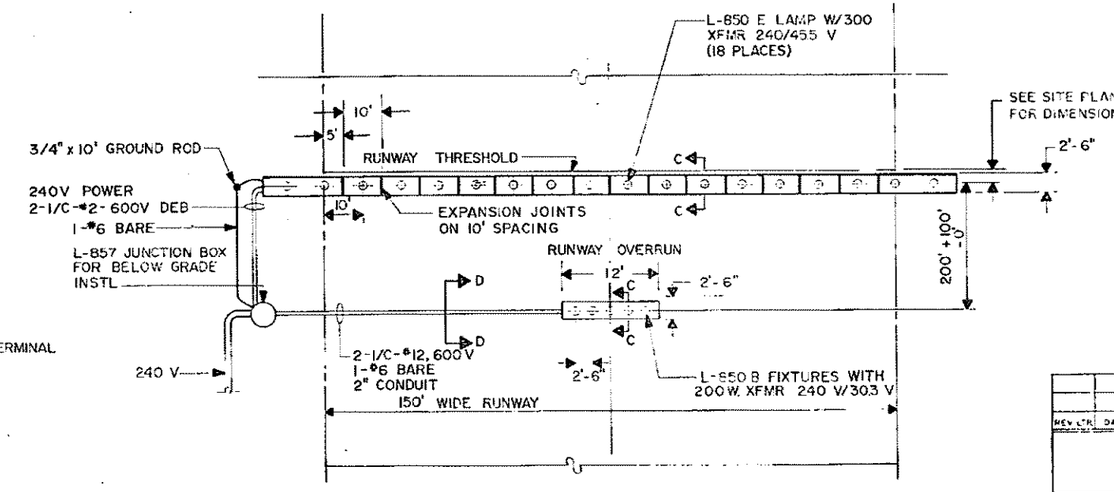

OVERRUN PLAN

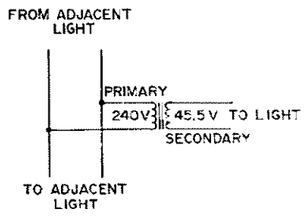

THRESHOLD WIRING

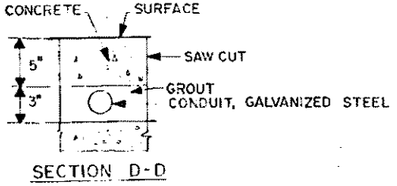

SECTION D-D

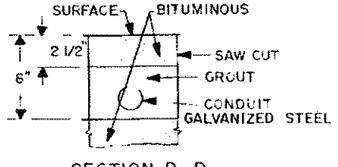

SECTION D-D

REV LTR	DATE	DESCRIPTION	CHECKED	APPROVED

DEPARTMENT OF TRANSPORTATION
FEDERAL AVIATION ADMINISTRATION
WASHINGTON, D.C. 20591

MALSR W/THRESHOLD LIGHTS AND
LOW IMPACT RESISTANT STRUCTURE
SEMI-FLUSH THRESHOLD LIGHTS, DETAILS
FOR RUNWAY OVERRUN INSTALLATION

REVIEWED BY	SUBMITTED BY	APPROVED BY
	A FRIEMUTH	F GILMORE
	HQ'S, ELECTROMECHANICAL BR, AAF-540	CHIEF, TECH. ANALYSIS SYSTEM DIV, AAF-500
DESIGNED BY	ISSUED BY	DATE — SEPTEMBER 5, 1984
DRAWN BY	AIRWAY FACILITIES SERVICE	DRAWING NO. D-6213-6
CHECKED BY		REV LTR

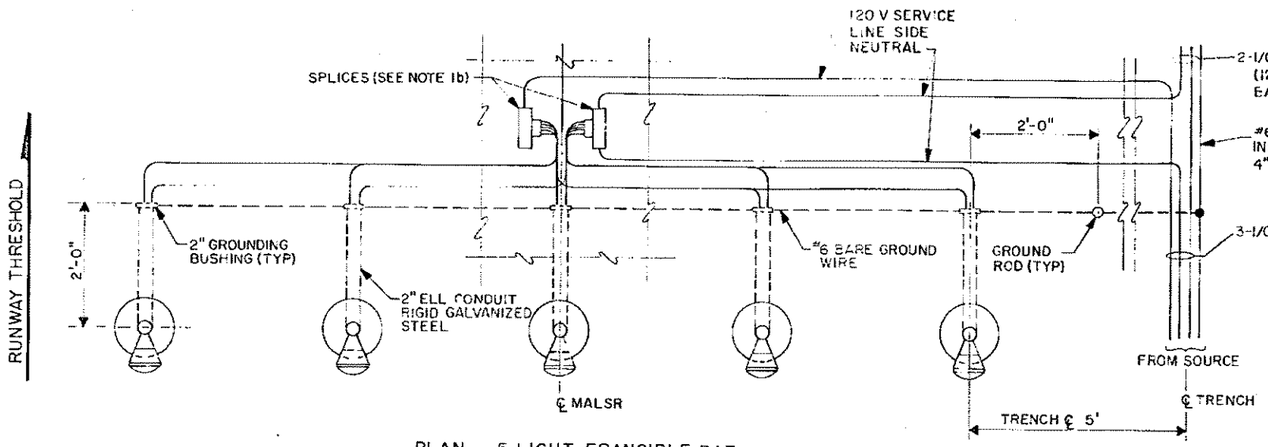

PLAN – 5 LIGHT FRANGIBLE BAR

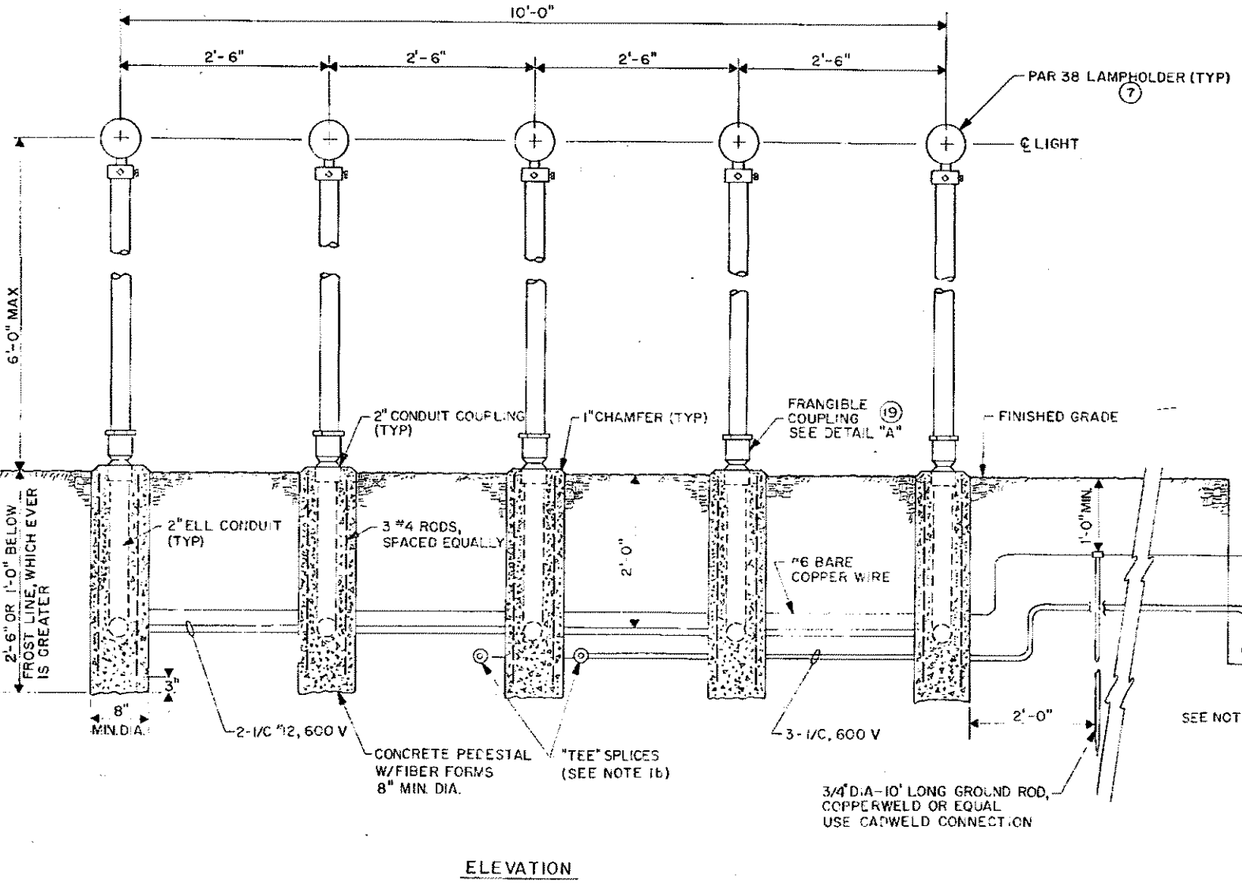

ELEVATION

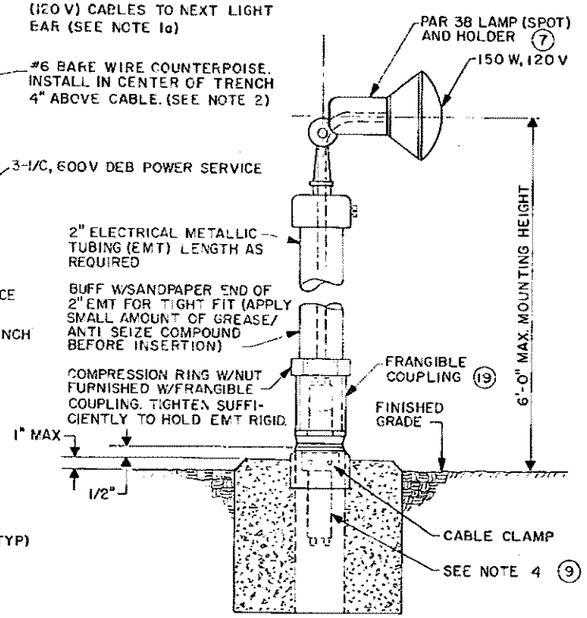

DETAIL "A"

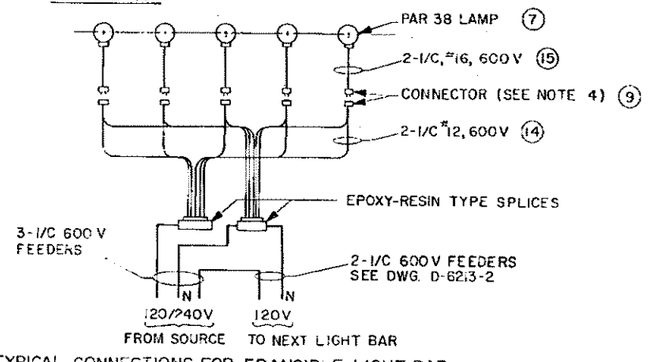

TYPICAL CONNECTIONS FOR FRANGIBLE LIGHT BAR

NOTES:

1a. THE POWER CABLES SHALL BE CONTINUOUS BETWEEN THE LIGHT STATIONS. IF SPLICES ARE REQUIRED, THEY SHALL BE OF THE "EPOXY-RESIN" TYPE WITH PLASTIC SHELL. THE CONDUCTORS SHALL BE JOINED WITH SOLDERLESS WIRE CONNECTORS.

1b. "TEE" SPLICES FOR SPLICING THE #12 WIRES OF THE LOWER CABLE CONDUCTORS TO THE POWER SERVICE CABLES SHALL BE JOINED WITH SOLDERLESS WIRE CONNECTORS AN OUTER SHELL FILLED WITH EPOXY-RESIN SHALL BE USED.

2. LONG SECTIONS OF COUNTERPOISE WIRE SHALL BE CONNECTED TO A GROUND ROD ON AT LEAST 400 FT. SPACINGS.

3. LEAVE 3 FEET SLACK IN EACH CABLE AT EACH LIGHT BAR.

4. FIELD ATTACHED CONNECTOR, L-823 PLUG AND RECEPTACLE (AC 150-5343-26A)

5. COUPLING THREADS TO BE CLEANED AND COATED WITH SILICONE ANTI-SEIZE COMPOUND.

6. SEE DRAWING D-6213-2 FOR EQUIPMENT IDENTIFICATION.

REV LTR	DATE	DESCRIPTION	CHECKED	APPROVED

DEPARTMENT OF TRANSPORTATION
FEDERAL AVIATION ADMINISTRATION
WASHINGTON, D.C. 20591

MALSR W/THRESHOLD LIGHTS AND LOW IMPACT RESISTANT STRUCTURE UP TO 6'-0" MOUNTING HEIGHT FRANGIBLE LIGHT BAR

DESIGNED BY	SUBMITTED BY	APPROVED BY
	A. FROEHLICH	F. GILMORE
	ELECTRO/MECHANICAL BR., AAF-530	CHIEF, ENGINEERING SYSTEM DIV., AAF-500
DESIGNED BY	ISSUED BY	DATE
DRAWN BY	AIRWAY FACILITIES SERVICE	DRAWING NO. D-6213-7
CHECKED BY		REV LTR

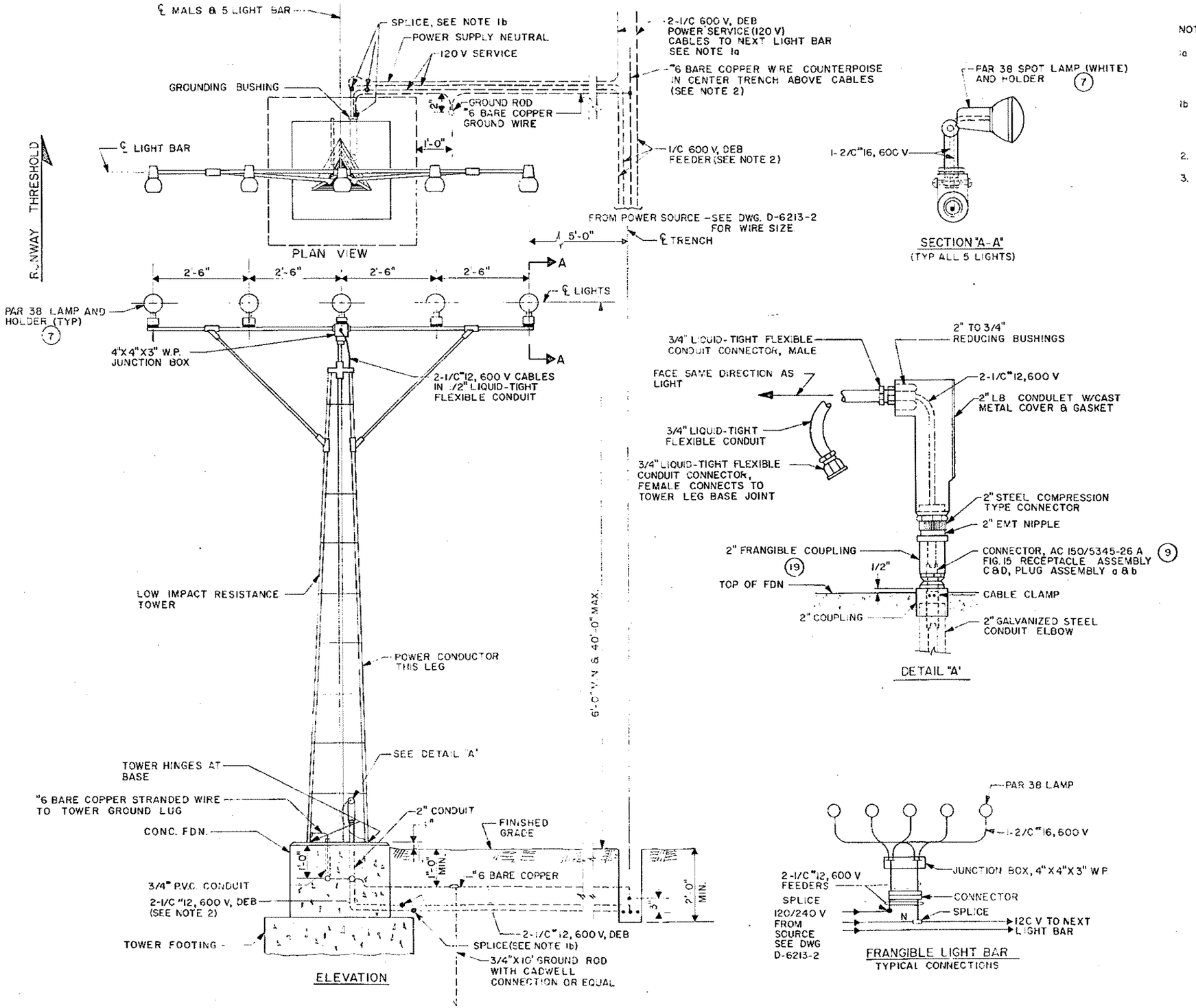

NOTES:

1a. THE POWER CABLES SHALL BE CONTINUOUS BETWEEN THE LIGHT STATIONS. IF SPLICES ARE REQUIRED, THEY SHALL BE OF THE "EPOXY-RESIN" TYPE WITH PLASTIC SHELL. THE CONDUCTORS SHALL BE EQUIPPED WITH SOLDERLESS WIRE CONNECTORS

1b. "TEE" SPLICES FOR SPLICING THE #12 WIRES OF THE LOWER CABLE ASSEMBLY CONDUCTORS TO THE POWER SERVICE CABLES SHALL BE SECURED WITH SOLDERLESS WIRE CONNECTORS, AN OUTER PLASTIC SHELL FILLED WITH EPOXY-RESIN SHALL BE USED.

2. LEAVE 3 FEET SLACK IN EACH CABLE AT EACH LIGHT BAR.

3. TOWER FOUNDATION SHALL BE CONSTRUCTED IN ACCORDANCE WITH D-6213-10.

REV LTR	DATE	DESCRIPTION	CHECKED	APPROVED

DEPARTMENT OF TRANSPORTATION
FEDERAL AVIATION ADMINISTRATION
WASHINGTON, D.C. 20591

MALSR W/THRESHOLD LIGHTS AND LOW IMPACT RESISTANT STRUCTURE 6'-0" TO 40'-0" MOUNTING HEIGHT STEADY-BURNING LIGHT DETAILS

DESIGNED BY	SUBMITTED BY	APPROVED BY
	A. ENGLISH	A. GILMORE
DRAWN BY	ISSUED BY	DATE
CHECKED BY	AIRWAY FACILITIES SERVICE	DRAWING NO. D-6213-8

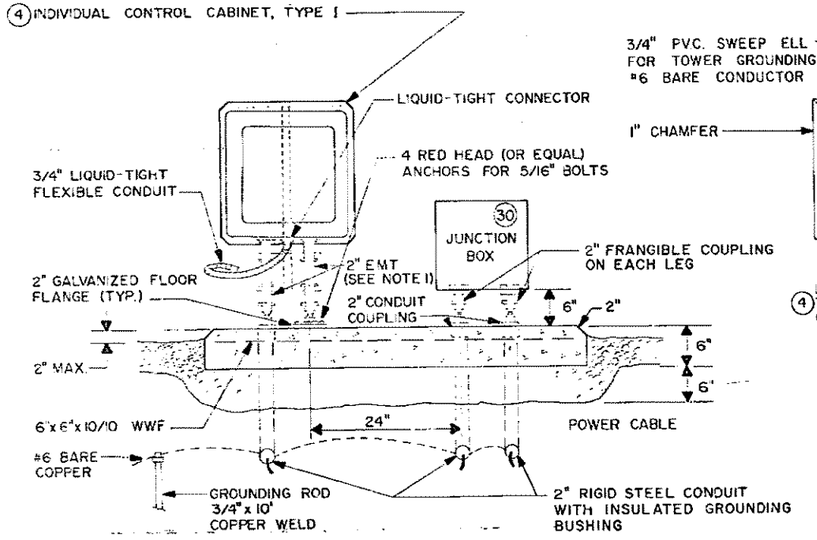

SECTION "A-A"

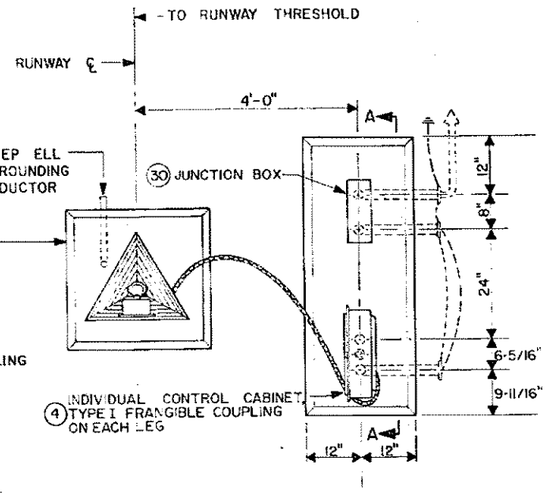

PLAN

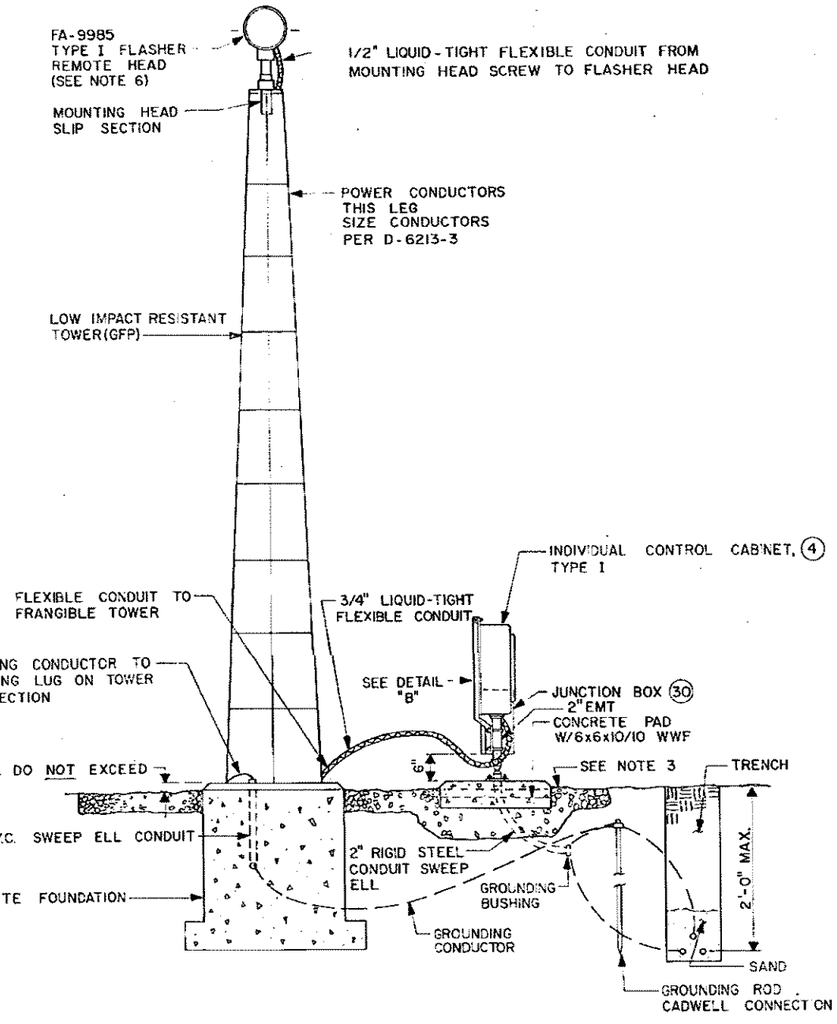

ELEVATION
SEQUENCED FLASHER-FRANGIBLE ALUMINUM TOWER

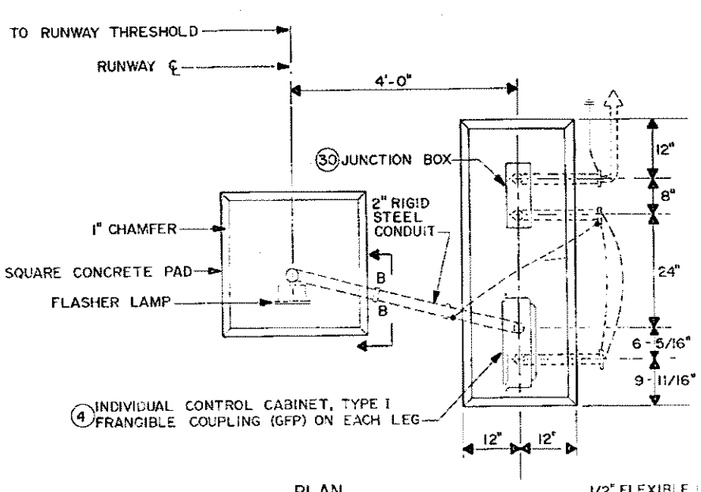

PLAN
6'-0" AND UNDER INSTALLATIONS

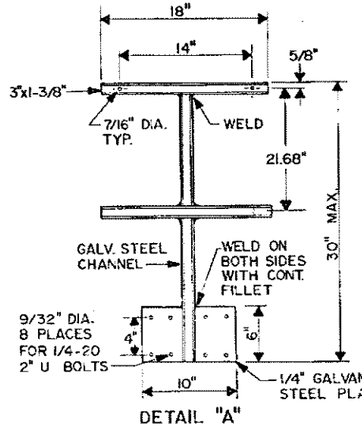

DETAIL "A"
INDIVIDUAL CABINET MOUNTING

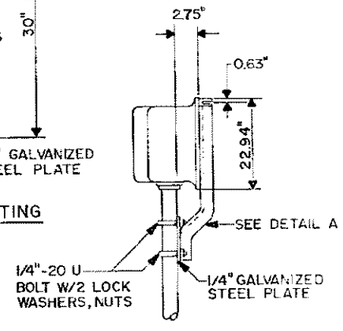

DETAIL "B"

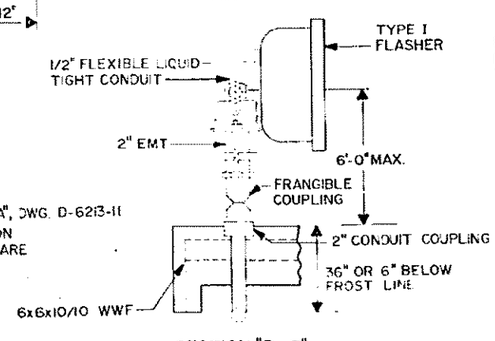

SECTION "B-B"

NOTES: THE CONTRACTOR SHALL CONSTRUCT THE RAIL SUCH THAT--

1. EMT CONDUIT IS USED WHERE DESIGNATED WITH NO SUBSTITUTION.
2. LATERAL TRENCH FROM STRUCTURE TO ℄ CABLE RUN IS A MINIMUM OF 24" DEEP.
3. FLASHER TOWER STATION HAS A TOWER MAINTAINANCE AREA, DETAIL "A", DWG. D-6213-11
4. CABLES AND CONNECTIONS FOR POWER AND CONTROL TO THE JUNCTION BOX, CONTROL CABINET, AND THE FLASHER REMOTE HEAD ASSEMBLY ARE PER DRAWING D-6213-3.
5. A WARNING SIGN, SHALL BE INSTALLED ON THE TOWER, DWG. D-6081.
6. TYPE FA-9985 SEQUENCED FLASHING LIGHT PURCHASED UNDER CONTRACT DTFA-01-C-20051.

REV. LTR.	DATE	DESCRIPTION	CHECKED	APPROVED

DEPARTMENT OF TRANSPORTATION
FEDERAL AVIATION ADMINISTRATION
WASHINGTON, D.C. 20591

MALSR W/THRESHOLD LIGHTS AND LOW IMPACT RESISTANT STRUCTURE 6'-0" TO 40'-0" MOUNTING HEIGHT FLASHER LIGHT INSTALLATION DETAILS

REVIEWED BY	SUBMITTED BY	APPROVED BY
CHIEF, [illegible] MECHANICAL BR., AAF-530	A. FROEHLICH	F. GUNTER
CHIEF, [illegible] ENGINEERING DIV., AAF-500	CH., ENVIRONMENTAL [illegible] DIV., AAF-400	
DRAWN BY	ISSUED BY	DATE — SEPTEMBER 15, 1971
CHECKED BY	AIRWAY FACILITIES SERVICE	DRAWING NO. D-6213-9
TRACED BY		REV. LTR.

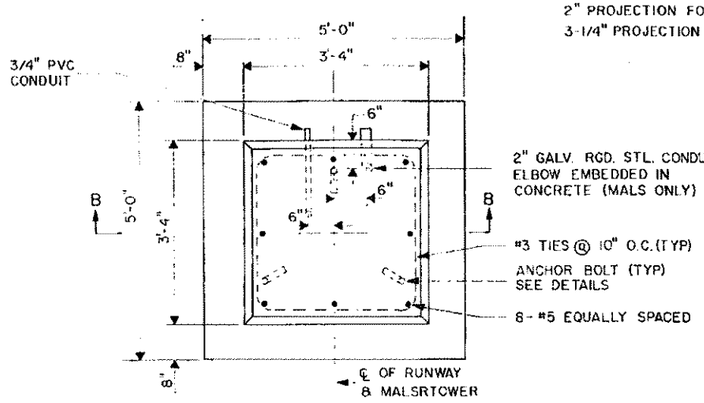

PLAN

FOUNDATION TYPE II
(TOWER HEIGHTS 6'-0" TO 20'-11")

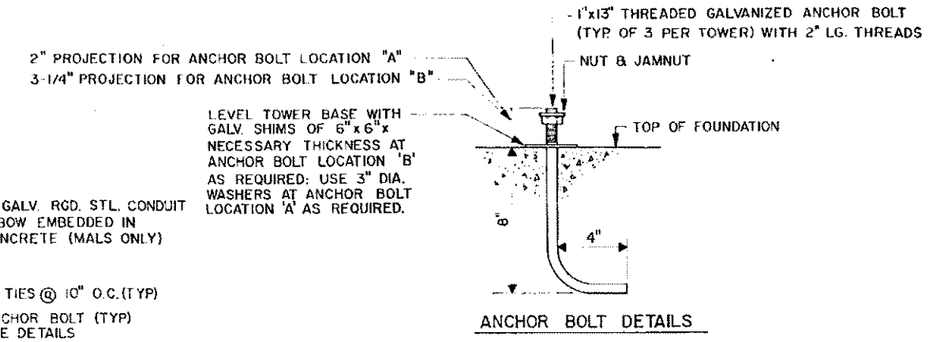

ANCHOR BOLT DETAILS

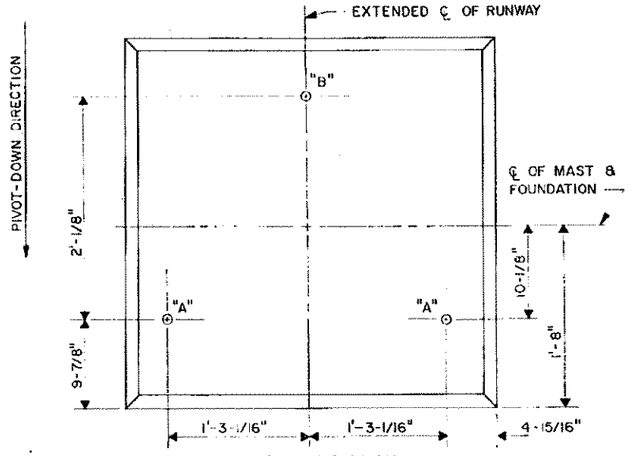

ANCHOR BOLT PLAN

FOR TOWER HEIGHTS (6'-0" TO 20'-11")

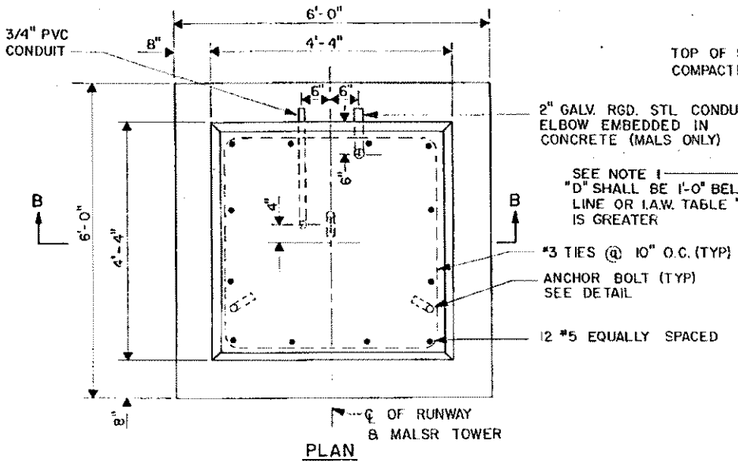

PLAN

FOUNDATION TYPE II
(TOWER HEIGHTS 21'-0" TO 40'-0")

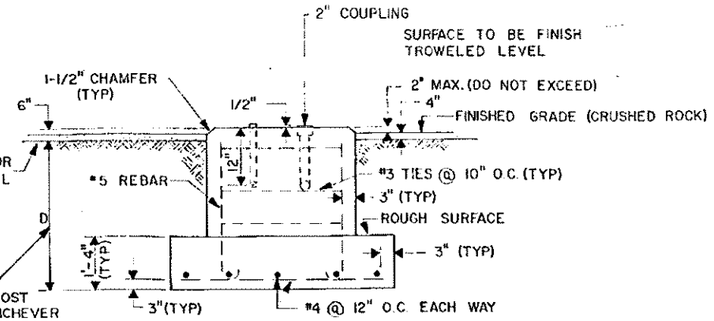

SECTION "B-B"

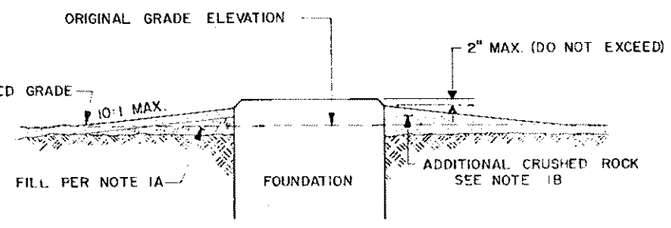

DETAIL "C"

FILL TO MAINTAIN 2" MAXIMUM FOUNDATION PROJECTION ABOVE FINISHED GRADE

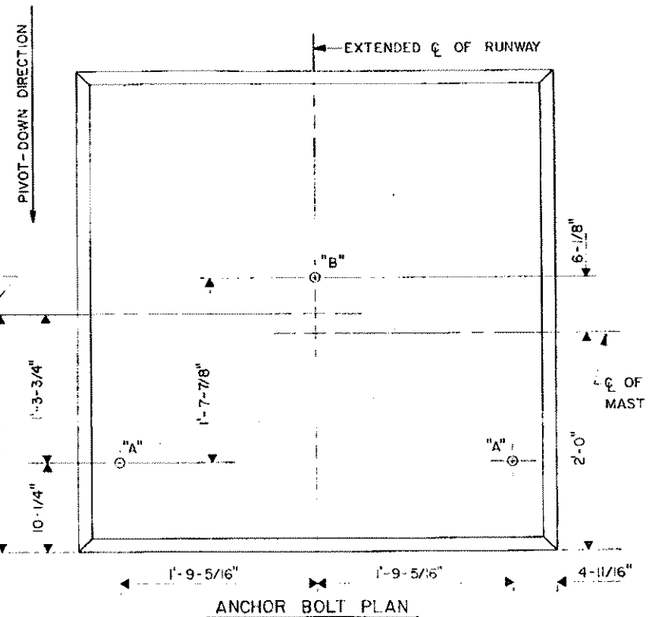

ANCHOR BOLT PLAN

FOR TOWER HEIGHTS (21'-0" TO 40'-0")

NOTES

1. IMPORTANT: IF FOUNDATION TOP ELEVATION ON SITE PLAN-PROFILE DRAWING IS MORE THAN 0'-2" HIGHER THAN ORIGINAL GRADE, THE CONTRACTOR SHALL:
   A. PLACE AND COMPACT EARTH FILL AROUND THE FOUNDATION TO SUCH A DEPTH THAT A 4" DEPTH OF CRUSHED ROCK ON TOP OF THE FILL WILL BRING THE FINISHED GRADE WITHIN 2" OF THE FOUNDATION TOP, OR
   B. PLACE AND COMPACT ADDITIONAL CRUSHED ROCK AROUND THE FOUNDATION TO BRING THE FINISHED GRADE WITHIN 2" OF THE FOUNDATION TOP.

   IN EITHER CASE, THE RESULTING SLOPE OF THE FINISHED GRADE AWAY FROM THE FOUNDATION SHALL NOT BE STEEPER THAN 10 HORIZONTAL TO 1 VERTICAL, SEE DETAIL "C".
2. THIS DRAWING GIVES INFORMATION FOR ALL TOWERS IN THE HEIGHT RANGE OF 6'-0" TO 40'-0". DISREGARD UNNECESSARY INFORMATION FOR TOWERS OUTSIDE THE HEIGHT RANGE OF THIS MALSR.
3. THIS DRAWING IS FOR STANDARD INSTALLATION OF LOW IMPACT RESISTANCE TOWER, TYPE SMA. SEE SPECIFIC DRAWING ON SITE LOCATION FOR FINAL ELEVATIONS

NOMINAL TOWER HEIGHT	DEPTH D
6'-0" TO 20'-0"	3'-0"
20'-0" TO 30'-0"	3'-6"
30'-0" TO 40'-0"	4'-0"

TABLE "D"
FOUNDATION DEPTH

REV LTR	DATE	DESCRIPTION	CHECKED	APPROVED

DEPARTMENT OF TRANSPORTATION
FEDERAL AVIATION ADMINISTRATION
WASHINGTON, D.C. 20591

MALSR W/THRESHOLD LIGHTS AND LOW IMPACT RESISTANT STRUCTURE 6'-0" TO 40'-0" MOUNTING HEIGHT LIR TOWER FOUNDATION DETAILS

REVIEWED BY	SUBMITTED BY	APPROVED BY
	A. FRIEDRICH	F. GILMORE
	ELECTRICAL/MECHANICAL BR., AAF-[illegible]	ENVIRONMENTAL SYSTEMS DIV, AAF-[illegible]
DESIGNED BY	ISSUED BY	
DRAWN BY	AIRWAY FACILITIES SERVICE	DATE
CHECKED BY		DRAWING NO. D-6213-10

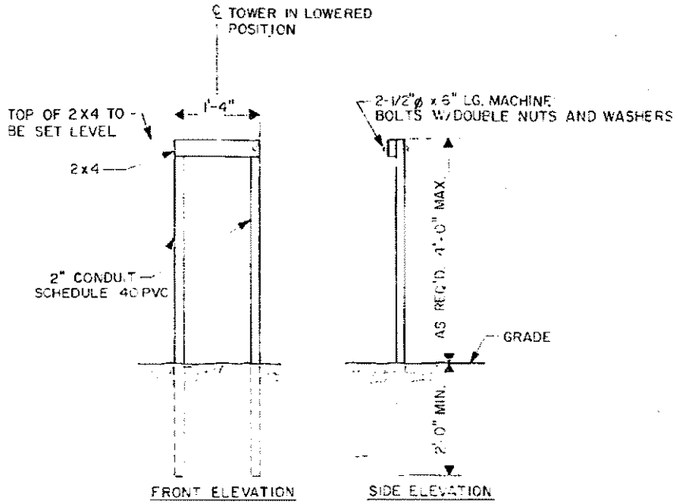

SINGLE TOWER MAINTENANCE STAND
(FOR LOCATION SEE DETAIL "A")

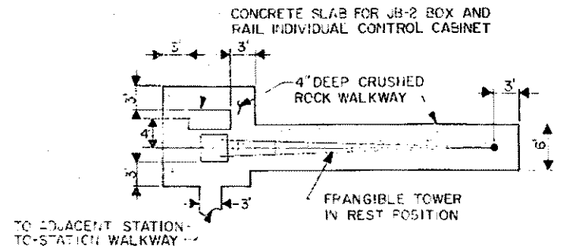

PLAN FOR RAIL FLASHER TOWER

NOTES:

1. THE TOWER MAINTENANCE STAND MAY BE LOCATED AT A DIFFERENT POINT DICTATED BY LOCAL CONDITIONS. CARE MUST BE EXERCISED WHILE SERVICING THE LOWERED TOWER TO PREVENT KINKING OR OTHER DAMAGE TO THE FRANGIBLE TOWER.

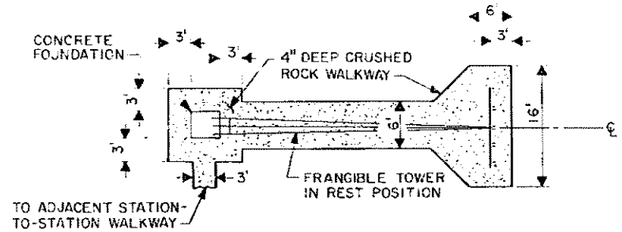

PLAN FOR MALS T-BAR TOWER
DETAIL "A" — TOWER MAINTENANCE AREA

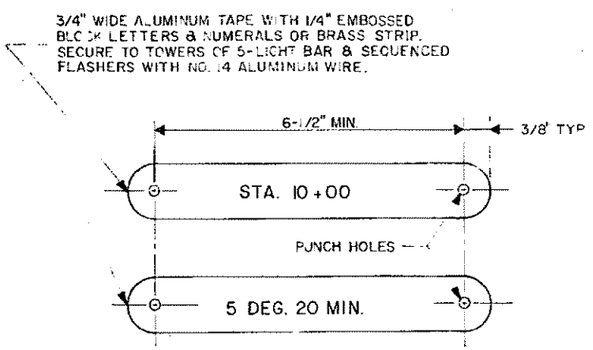

STATION & VERTICAL ANGLE
IDENTIFICATION STRIPS

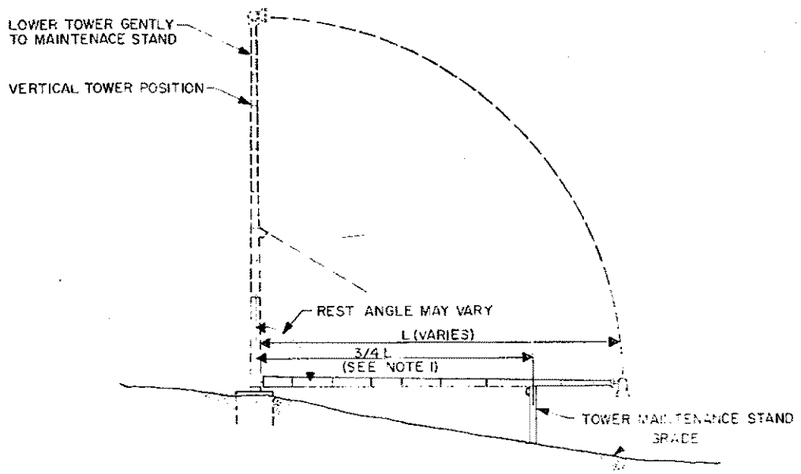

TOWER MAINTENANCE STAND LOCATION
DETAIL "B"

LOWERING DEVICE TO BE SUPPLIED BY MANUFACTURER OF TOWER

REV LTR	DATE	DESCRIPTION	CHECKED	APPROVED

DEPARTMENT OF TRANSPORTATION
FEDERAL AVIATION ADMINISTRATION
WASHINGTON, D.C. 20591

MALSR W/THRESHOLD LIGHTS AND
LOW IMPACT RESISTANT STRUCTURE
6'-0" TO 40'-0" MOUNTING HEIGHT
MISCELLANEOUS DETAILS

REVIEWED BY	SUBMITTED BY	APPROVED BY
	A. FROEHLICH	

DESIGNED BY	ISSUED BY	DATE	REV LTR
DRAWN BY	AIRWAY FACILITIES SERVICE	DRAWING NO. D-6213-11	

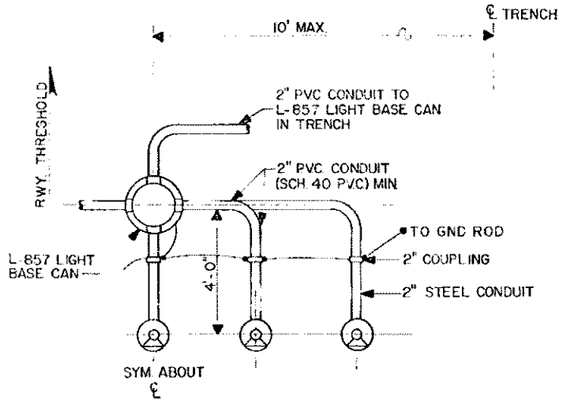

PLAN

5 LIGHT FRANGIBLE (EMT) LAYOUT WHEN REQUIRED

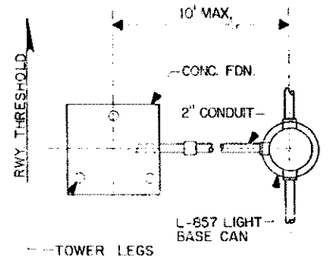

PLAN

TOWERS 6' TO 40'

5 LIGHT BAR CONDUIT LAYOUT WHEN REQUIRED

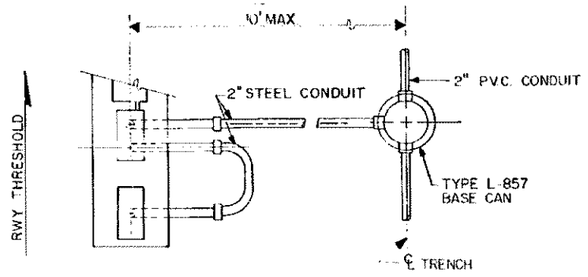

PLAN

SEQUENCED FLASHER JUNCTION BOX

CONDUIT LAYOUT WHEN REQUIRED

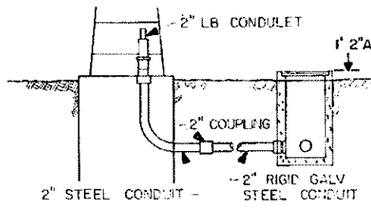

ELEVATION

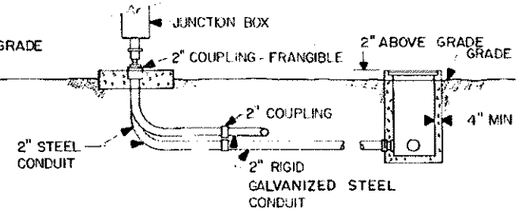

ELEVATION

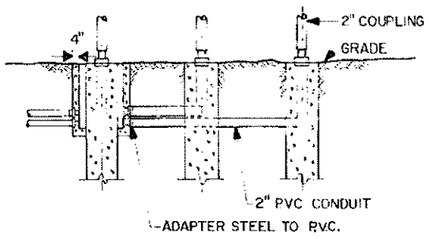

ELEVATION

REV LTR	DATE	DESCRIPTION	CHECKED	APPROVED

DEPARTMENT OF TRANSPORTATION
FEDERAL AVIATION ADMINISTRATION
WASHINGTON, D.C. 20591

MALSR W/THRESHOLD LIGHTS AND LOW IMPACT RESISTANT STRUCTURE 6'-0" TO 40'-0" MOUNTING HEIGHT UNDERGROUND CONDUIT SYSTEM

REVIEWED BY	SUBMITTED BY	APPROVED BY
		S. GILMORE

DESIGNED BY	ISSUED BY	DATE	REV LTR
DRAWN BY	AIRWAY FACILITIES SERVICE	DRAWING NO. D-6213-12	
CHECKED BY			

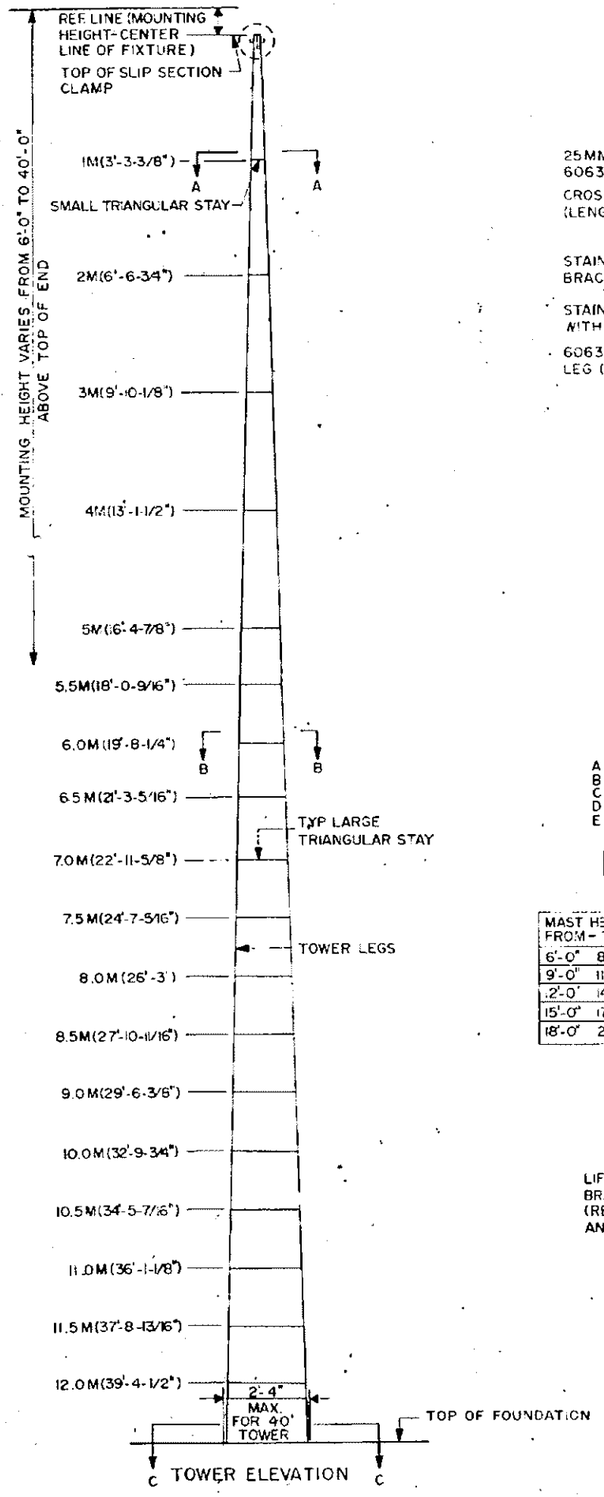

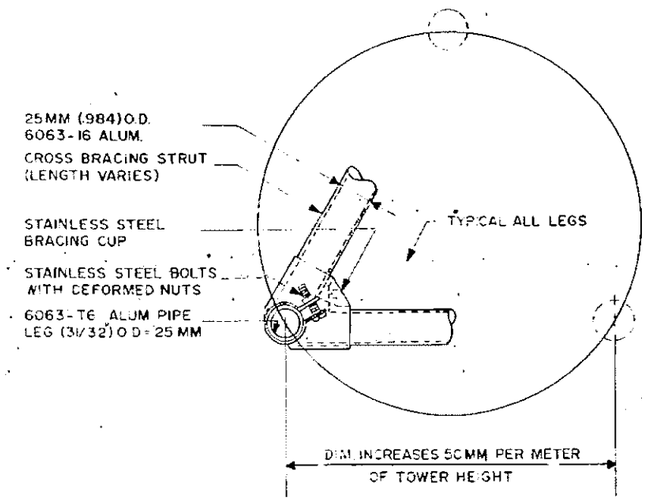

TYP SECTION B-B"
(LARGE STAY)

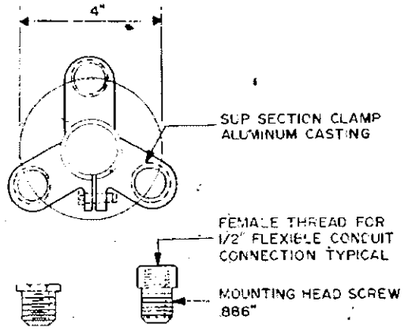

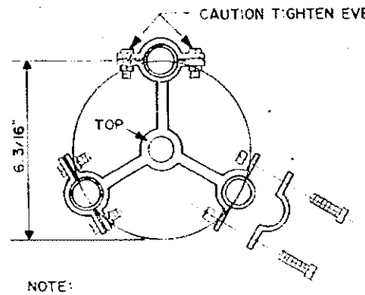

NOTE:
UNIT SHOULD BE INSTALLED WITH "TOP" & ARROWS TOWARDS TOP OF MAST.

SECTION A-A"
(SMALL STAY)

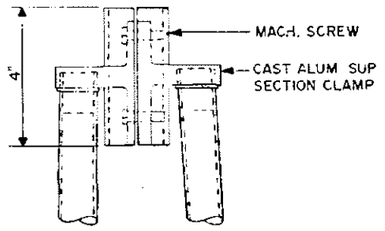

SLIP SECTION CLAMP
DETAIL "A"

NOTES:
1. COAT ALL THREADS WITH SILICONE ANTI-SEIZE COMPOUND.
2 TOWERS SHALL BE CONSTRUCTED ACCORDING TO MANUFACTURERS INSTRUCTIONS.
3 TOWERS ARE MANUFACTURED BY JAQUITH INDUSTRIES INC. SYRACUSE, N.Y. 13205

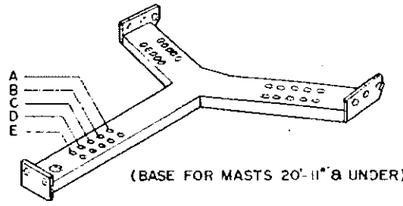

(BASE FOR MASTS 20'-11"& UNDER)

MAST HEIGHT FROM - TO	USE HOLES
6'-0" 8'-11"	A
9'-0" 11'-11"	B
12'-0" 14'-11"	C
15'-0" 17'-11"	D
18'-0" 20'-11"	E

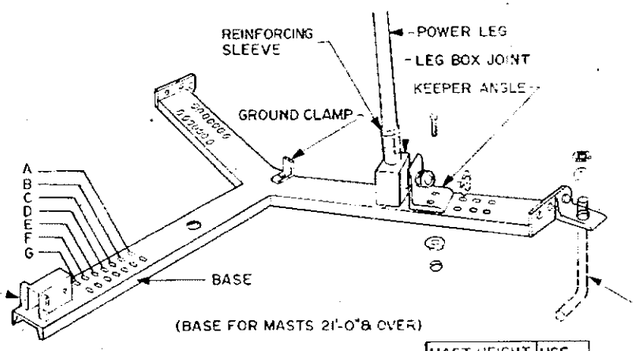

(BASE FOR MASTS 21'-0"& OVER)

BASE SECTION "C-C"

MAST HEIGHT FROM - TO	USE HOLES
21'-0" 23'-11"	A
24'-0" 26'-11"	B
27'-0" 29'-11"	C
30'-0" 32'-11"	D
33'-0" 35'-11"	E
36'-0" 38'-11"	F
39'-0" 40'-11"	G

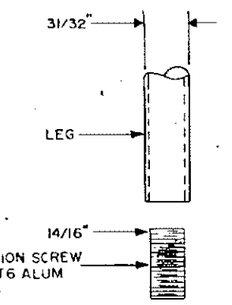

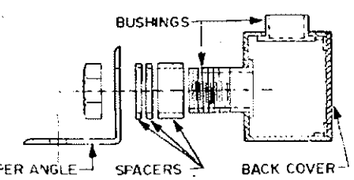

POWER LEG DETAIL
(CABLE NOT SHOWN)

DEPARTMENT OF TRANSPORTATION
FEDERAL AVIATION ADMINISTRATION
WASHINGTON, D.C. 20591

MALSR W/THRESHOLD LIGHTS AND LOW IMPACT RESISTANT STRUCTURE 6'-0" TO 40'-0" MOUNTING HEIGHT STRUCTURAL ERECTION AND DETAILS

REVISED BY	SUBMITTED BY	APPROVED BY
	A. ENGHILGH	F. GILMORE
REVISED BY	ISSUED BY	DATE
DRAWN BY	AIRWAY FACILITIES SERVICE	DRAWING NO. D-6213-13
CHECKED BY		REV LTR

NO.	DATE	DESCRIPTION	CHECKED	APPROVED

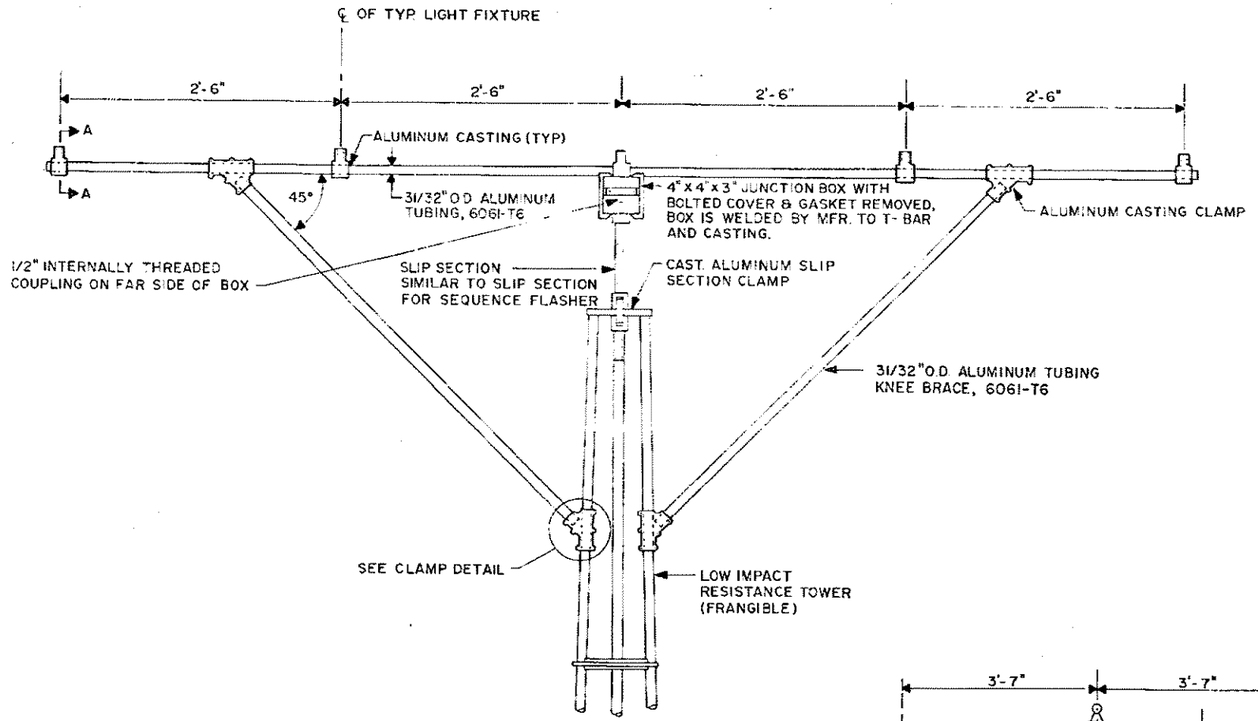

5-LIGHT T-BAR
(CROSS BAR)

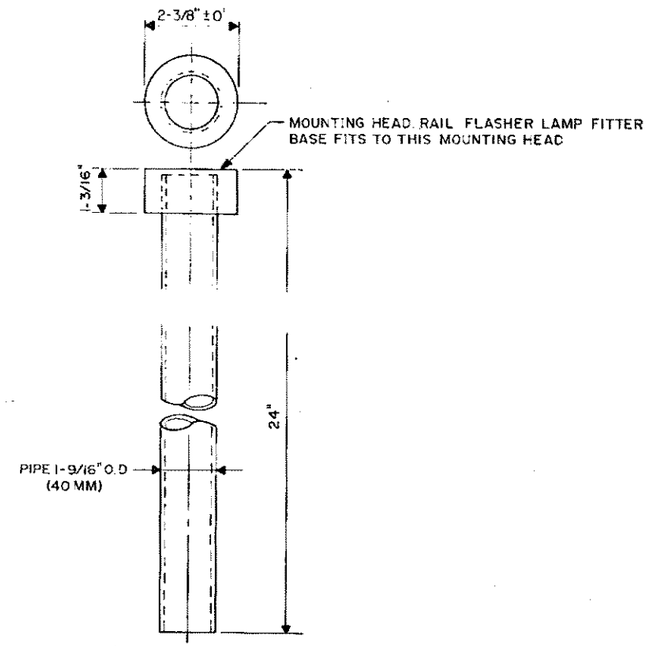

MOUNTING HEAD SLIP SECTION
FOR SEQUENCED FLASHER

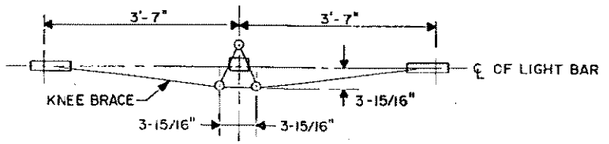

PLAN VIEW OF KNEE BRACES
SHOWING BUILT-IN RESISTANCE TO TWISTING

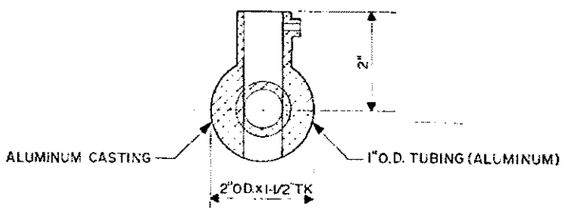

SECTION "A-A"

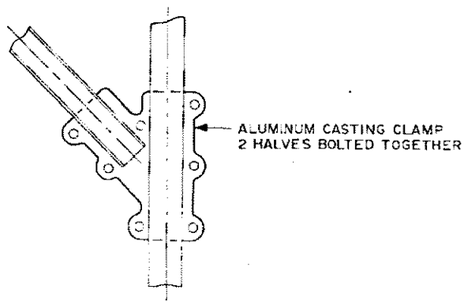

CLAMP DETAIL

REV LTR	DATE	DESCRIPTION	CHECKED	APPROVED

DEPARTMENT OF TRANSPORTATION
FEDERAL AVIATION ADMINISTRATION
WASHINGTON, D.C. 20591

MALSR W/THRESHOLD LIGHTS AND
LOW IMPACT RESISTANT STRUCTURE
6'-0" TO 40'-0" MOUNTING HEIGHT
FRANGIBLE T-BAR AND RAIL FLASHER
MOUNTING HEAD

REVIEWED BY | SUBMITTED BY A. FROELICH | APPROVED BY F. GILMORE

DESIGNED BY | DRAWN BY | CHECKED BY | ISSUED BY AIRWAY FACILITIES SERVICE | DATE | DRAWING NO. D-6213-14 | REV LTR

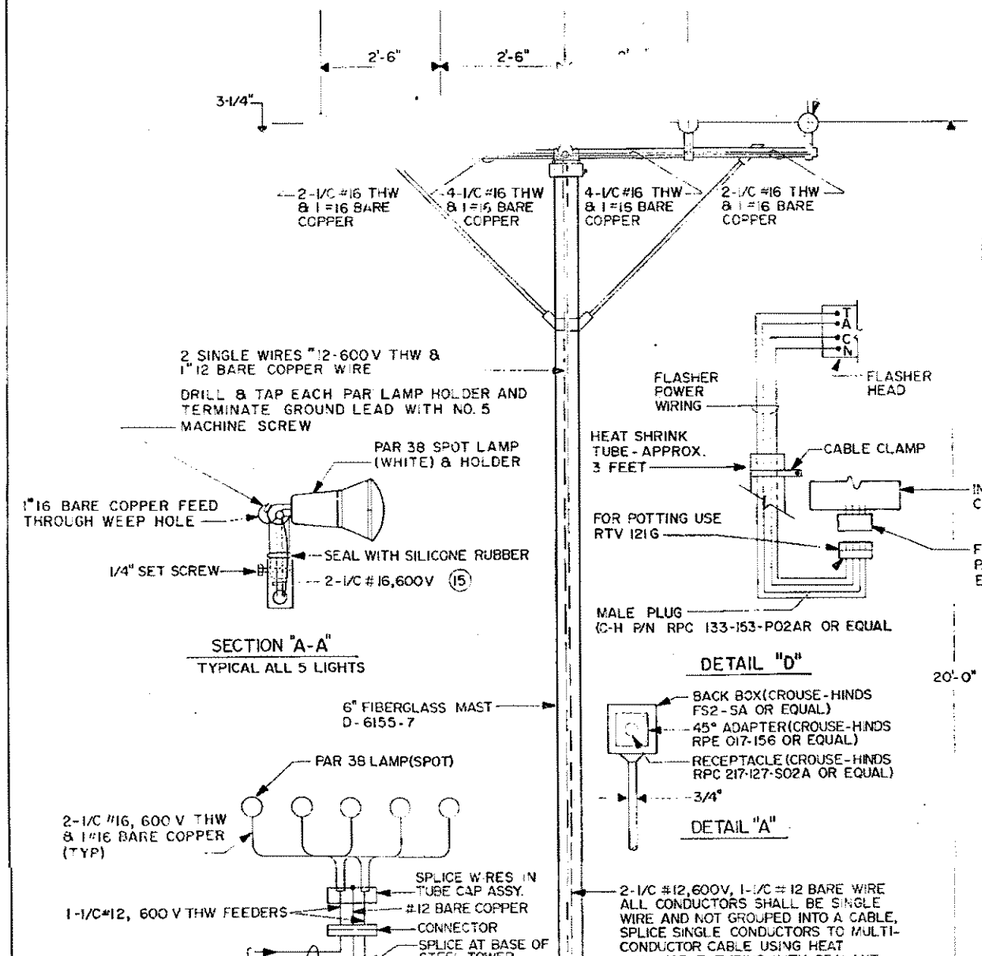

NOTES:

1. QUANTITY OF CABLE LENGTH VARIES WITH STEEL SUPPORT HEIGHTS.
2. ALL CONNECTIONS TO BE MOISTURE PROOF.
3. ALL ELECTRIC WORK SHALL COMPLY WITH THE NATIONAL ELECTRIC CODE.
4. INCREASE FEEDER CABLE SIZE TO TOWER TO NEXT LARGER WIRE SIZE FOR TOWERS OVER 60FT. LIGHT MOUNTING HEIGHT.
5. SUSPENDED FEEDER CABLES BETWEEN SUPPORT TOWERS SHALL BE ATTACHED ONLY TO TRUSS JOINTS WHOSE MEMBERS FRAME IN PARALLEL PLANE TO SUSPENDED CABLE. (WHERE SUSPENDED CABLES ARE USED) JUNCTION BOX SHALL BE LOCATED ON ADJACENT TO CABLE TOWER TERMINATION.
6. ALL WIRE CONNECTIONS SHALL BE IN ACCORDANCE WITH MANUFACTURER'S INSTRUCTION BOOK.
7. LOCATION OF INDIVIDUAL CONTROL CABINET AND JUNCTION BOX IS OPTIONAL. BOTH MAY BE LOCATED AT BASE OF TOWER PROVIDED THE MAXIMUM DISTANCE BETWEEN THE FLASHER LAMP AND THE JUNCTION DOES NOT EXCEED 150'. TYPICAL GROUND MOUNTING DETAIL SHOWN ON DWG. D-6213-9.
8. FOR SYSTEMS WIRING SEE DWG. D-6213-2.
9. FOR ELECTRICAL CONNECTION DETAILS SEE DWG. D-6213-2 AND -3.
10. TOWER STRUCTURE SHALL BE GROUNDED IN A MANNER SIMILAR TO THAT SHOWN ON DWG. D-6213-9.
11. TOWER STRUCTURE SHALL BE CONSTRUCTED AS SHOWN ON D-6086 SERIES DWGS.
12. FLEXIBLE LIQUID-TIGHT CONDUIT, 1/2 INCH, SEALTITE TYPE HCX, ANACONDA METAL HOSE DIV., WATERBERRY, CONN. OR EQUAL.

REV LTR	DATE	DESCRIPTION	CHECKED	APPROVED

DEPARTMENT OF TRANSPORTATION
FEDERAL AVIATION ADMINISTRATION
WASHINGTON, D.C. 20591

MALSR W/THRESHOLD LIGHTS AND LOW IMPACT RESISTANCE STRUCTURE 40'-0" TO 128'-0" MOUNTING HEIGHT LIR WIRING

REVIEWED BY	SUBMITTED BY	APPROVED BY
	A. ENGELSON	F. GILMORE
DESIGNED BY	ISSUED BY	DATE
DRAWN BY	AIRWAY FACILITIES SERVICE	DRAWING NO. D-6213-15
RECOMMENDED BY		REV LTR

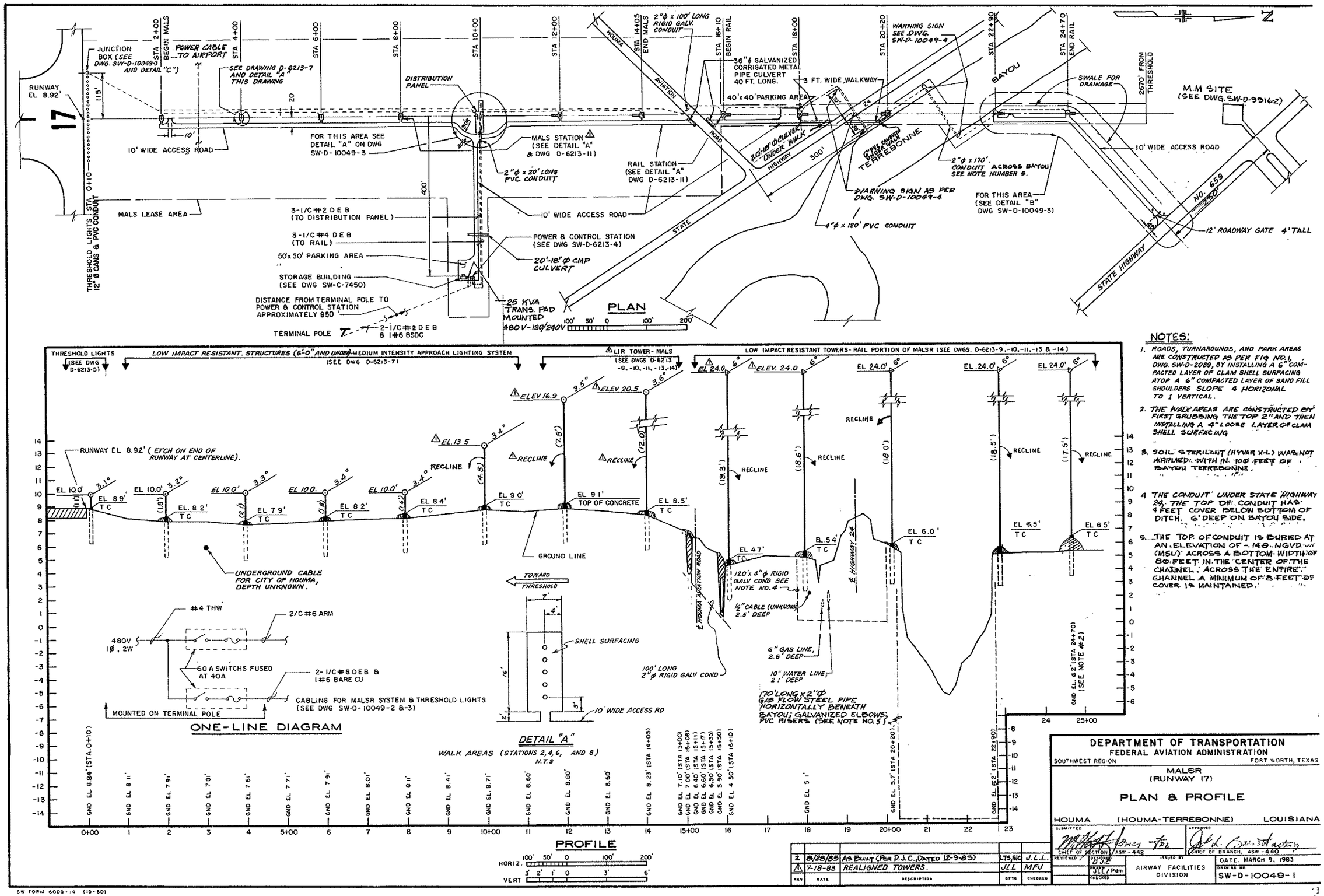

NOTES:

1. ROADS, TURNAROUNDS, AND PARK AREAS ARE CONSTRUCTED AS PER FIG NO. 1, DWG. SW-D-2089, BY INSTALLING A 6" COMPACTED LAYER OF CLAM SHELL SURFACING ATOP A 6" COMPACTED LAYER OF SAND FILL SHOULDERS SLOPE 4 HORIZONAL TO 1 VERTICAL.
2. THE WALK AREAS ARE CONSTRUCTED BY FIRST GRUBBING THE TOP 2" AND THEN INSTALLING A 4" LOOSE LAYER OF CLAM SHELL SURFACING
3. SOIL STERILANT (HYVAR X-L) WAS NOT APPLIED WITHIN 100 FEET OF BAYOU TERREBONNE.
4. THE CONDUIT UNDER STATE HIGHWAY 24, THE TOP OF CONDUIT HAS 4 FEET COVER BELOW BOTTOM OF DITCH. 6' DEEP ON BAYOU SIDE.
5. THE TOP OF CONDUIT IS BURIED AT AN ELEVATION OF -14.8 NGVD (MSL) ACROSS A BOTTOM WIDTH OF 80 FEET IN THE CENTER OF THE CHANNEL. ACROSS THE ENTIRE CHANNEL A MINIMUM OF 8 FEET OF COVER IS MAINTAINED.

DEPARTMENT OF TRANSPORTATION
FEDERAL AVIATION ADMINISTRATION
SOUTHWEST REGION — FORT WORTH, TEXAS

MALSR
(RUNWAY 17)

PLAN & PROFILE

HOUMA (HOUMA-TERREBONNE) LOUISIANA

REV	DATE	DESCRIPTION	DFTG	CHECKED
2	8/28/85	As Built (Per D.J.C., Dated 12-9-85)	LTS, INC	J.L.L.
1	7-18-83	REALIGNED TOWERS.	J.L.L	M.F.J

SUBMITTED: CHIEF OF SECTION, ASW-442
APPROVED: CHIEF OF BRANCH, ASW-440
REVIEWED
DESIGNED: J.L.L.
DRAWN: J.L.L. / P.d.m
CHECKED
ISSUED BY: AIRWAY FACILITIES DIVISION
DATE: MARCH 9, 1983
DRAWING NO: SW-D-10049-1

SW FORM 6000-14 (10-80)

FOR INSTALLATION AND GROUNDING OF THRESHOLD LIGHTS SEE DWG D-6213-5 (12" Ø CANS & PVC CONDUIT)

MALS (MEDIUM INTENSITY APPROACH LIGHT SYSTEM) — RAIL (RUNWAY ALIGNMENT INDICATOR LIGHTS)

2+00 4+00 6+00 8+00 10+00 12+00 14+05 16+10 18+00 20+20 22+90 24+70

200'-0"

℄ RUNWAY

2-I/C #6 D.E.B.

2-I/C #6 D.E.B. & 1-I/C #8 D.E.B.

COUNTER-POISE, SEE NOTE 4

CKT #1 CKT #3 CKT #5 CKT #7 CKT #9 CKT #2 CKT #4 CKT #6 CKT #8

1 - #6 SOLID BARE COPPER

FLASHER TOWER, FLASHER UNIT AND FLASHER CONTROL CABINET } TYP

3-I/C #10, D.E.B.

3-I/C #6, D.E.B.

2-I/C #10, D.E.B.

JUNCTION BOX (TYP)

DISTRIBUTION PANEL

3-I/C #4, D.E.B.

2-I/C #6, D.E.B.
1-I/C #10, D.E.B.
2-I/C #8, D.E.B.
NEUTRAL BUS

DISTRIBUTION PANEL

1-I/C #6, D.E.B.
1-I/C #10, D.E.B.

COUNTEPOISE SEE NOTE 4

MALS CONTROL

GROUND-GROUND RECVR DECOD.

AIR-GROUND RECVR CONT.

INTERFACE UNIT

120/240 V

15 KVA TRANSFORMER

TYPE B MASTER CONTROL CABINET

DISCONNECT SWITCH

3-1/C #2 600V DEB

3-1/C #2 600V DEB

3-1/C #4 D.E.B.

THRESHOLD LIGHTS 22-PAR 56, 300 W, 120 V FAA-E-982 10-FOOT ON CENTER

EPOXY-RESIN TYPE SPLICES OR FIELD INSTALLABLE "Y" CONNECTORS.

NEMA 3R JUNCTION BOX (TYP) (SEE NOTE #1 AND DETAIL "C" ON DWG SW-D-10049-3)

SYSTEM LAYOUT

CIRCUITS 1,3 2#6 & 1#8, 600 V, D.E.B.

CIRCUITS 5,7 3#10, 600V D.E.B.

CIRCUIT 9 THRESHOLD

BAR B

CIRCUITS 2,4 1000' BAR BARS A & C

3#10, 600V D.E.B.

SPARE SPACE

CIRCUIT 6

CIRCUIT 8

3#10, 600V, D.E.B.

SEE NOTE 5

3-1/C #2, 600V

STATION 12+00

STATION 14+00

SYMBOL	DESCRIPTION
	GROUND ROD. SEE SYSTEM LAYOUT AND NOTE 3
	LIGHT BAR, 5 EACH, PAR 38, 120 V LAMPS
	SEQUENCED FLASHERS
	THRESHOLD LIGHTS

NOTES:

1 SEE ASSOCIATED ELECTRICAL DRAWINGS FOR WIRING AT EACH STATION.

2 FOR MOUNTING DETAILS OF POWER AND CONTROL STATION, SEE DRAWING D-6213-4

3 GROUND ROD 3/4" x 10' AT EACH LIGHT STATION AND GROUND EQUIPMENT & STRUCTURE

4 # 6 BARE COPPER COUNTERPOISE WIRE ABOVE ALL CABLE RUNS IN TRENCH

5 ALL CIRCUIT BREAKERS BOLT ON TYPE.

* TYPICAL QUANTITIES FOR MALSR SYSTEMS

PIECE NO	DESCRIPTION	QUANTITY
1	CONTROL CABINET FA-9877	1
2	15KVA POWER TRANSFORMER FA-9877	1
3	TYPE B MASTER CONTROL FA-9989	1
4	INDIVIDUAL CONTROL CABINET FA-9985	5
5	FLASHER ASSEMBLY, TYPE I FA-9985	5
6	AIMING DEVICES	2
7	PAR 38 LAMP HOLDER ASSEMBLY FA-9877	45
8	LIGHTNING ARRESTOR	4
9	PLUG & RECEPTACLE & CLAMPS	70
10	CABLE I/C #2, 600 V TYPE USE	7100 FT
11	CABLE I/C #4, 600 V TYPE USE	3700 FT
12	CABLE I/C #8, 600 V TYPE USE	2600 FT
13	CABLE I/C #10, 600 V TYPE USE	4800 FT
14	CABLE I/C #6, 600 V TYPE USE	4100 FT.
15	#6 BARE COPPER WIRE	5300 FT.
16	MAIN DISCONNECT SWITCH, POWER & CONTROL RACK	1
17	WARNING SIGNS (BURIED HIGH VOLTAGE CABLE)	6
18	WARNING SIGNS B-6081 (DANGER KEEP OFF)	6
19	2" FRANGIBLE COUPLING	93
20		
21		
22	INTERFACE UNIT FA-9871	1
23	GROUND-GROUND RECEIVER DECODER	1
24	AIR-GROUND RECEIVER CONTROLLER	1
25	CABLE I/C #10 600V, THW	300 FT
26	CABLE I/C #14 600V, THW	100 FT
27	CABLE I/C #12 600V, THW	1400 FT
28		
29	THRESHOLD LIGHTS ELEVATED	22
30	JUNCTION BOX JB-2 NEMA 3R	6

* THIS IS A LIST OF TYPICAL QUANTITIES FOR REFERENCE ONLY.

MALS CONTROL CABINET FA-9877

GROUND LUG

TB1 TB2 TB3

NEUTRAL 120V LOW MEDIUM HIGH FLASHERS

15 KVA TRANSFORMER FA 9877

X1 X2 X3 H1 H2 H3

LIGHTNING ARRESTORS

#6 BARE COPPER COUNTERPOISE

3-1/C #4 THW

4-1/C #4 THW TO 15 KVA MALS TRANSFORMER

GROUND/GROUND RECEIVER/DECODER

LEFT HAND DECODER TBL

RIGHT HAND DECODER TBR

6-1/C #14 AWG

9-1/C #14 AWG

INTERFACE UNIT FA-9881

TB1 TB2

E4

1FU TB2-2 120V AC

1FU TB2-1 NEUT

(2)-1/C #14

5-1/C #14 AWG

5-1/C #18

AIR/GROUND RECEIVER/DECODER FAA L-854

T8A

LOW MEDIUM HIGH 115 VAC NEUTRAL

MODEL RC-1T5A FREQ. 125.3 MHZ

FLASHER MASTER TIMER FA-9989

TB1 TB3 TB5 TB2 TB4

N 120 LO MED HI FLASHER

3-1/C #4 THW

3-1/C #4 USE TO FLASHERS (SEE DRAWING SW-D-10049-3)

100A, 240V, 3W, 1Ø MAIN DISCONNECT FUSED @ 70AMP

L2 N L1

3-1/C #2 240/120V, 1Ø FROM 25 KVA TRANS

LIGHTNING ARRESTOR.

25 KVA TRANSFORMER 480V-240V, 1Ø ON CONCRETE PAD

2-I/C #8 & 1#6 BARE 480V, 1Ø FROM SWITCH ON POWER POLE SEE DWG. SW-D-10049-1

REV LTR	DATE	DESCRIPTION	BY	CHECKED	APPROVED
1	8-28-85	AS-BUILT (PER D.J.C. DATED 12/9/83)	LTR INC	J.L.L.	

DEPARTMENT OF TRANSPORTATION
FEDERAL AVIATION ADMINISTRATION

SOUTHWEST REGION — FORT WORTH, TEXAS

MALSR W/THRESHOLD LIGHTS & LOW IMPACT RESISTANT STRUCTURE

ELECTRICAL DETAILS

HOUMA (HOUMA-TERREBONNE) LA.

REVIEWED BY — SUBMITTED BY — APPROVED BY

CHIEF OF SECTION, ASW-442 — CHIEF OF BRANCH, ASW-440

DESIGNED BY D.J.C. — DRAWN BY — CHECKED BY

ISSUED BY AIRWAY FACILITIES DIVISION

DATE - 3-9-83

DRAWING NO SW-D-10049-2

REV LTR 1

NOTES:

1. JUNCTION BOXES ARE NEMA 3R, 200 AMP, 240 VOLT. THEY HAVE 3 INSULATED BUS BARS AND 1 GROUNDED NEUTRAL BUS BAR. EACH BUS BAR IS CAPABLE OF ACCEPTING #1/0 WIRE. BOX SIZE IS AT LEAST 14"LONG BY 11" WIDE BY 5-1/8" HIGH AND HAS TWO 1-1/2"--- 2" CONCENTRIC KNOCKOUTS AND ONE 3/4" KNOCKOUT. THE JUNCTION BOXES ARE HOFFMAN — BULLETIN A-91, CATALOG NUMBER H-S93
2. THE JUNCTION BOXES ARE LOCATED AS INDICATED ON THE PLAN & PROFILE DRAWING AND ACCORDING TO DRAWING D-6213-9, SECTION "A-A"

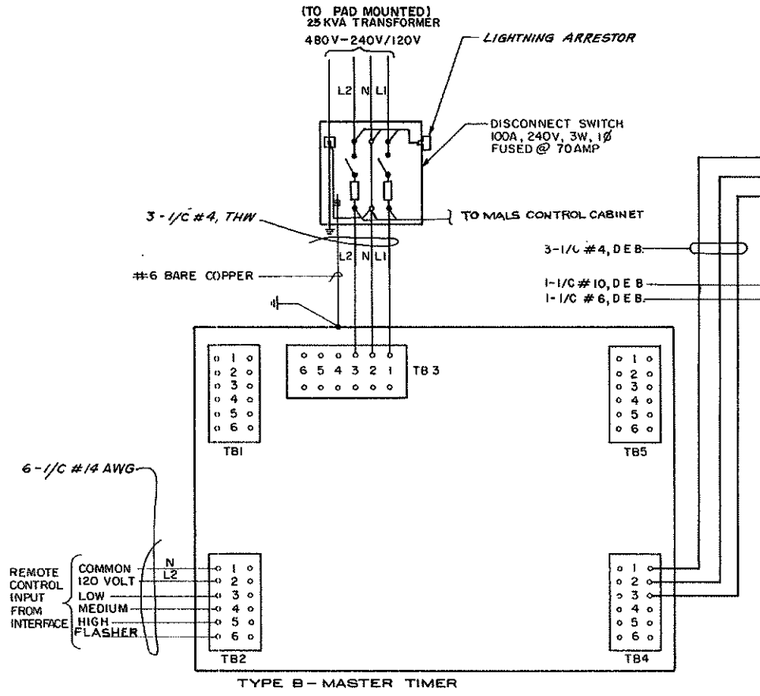

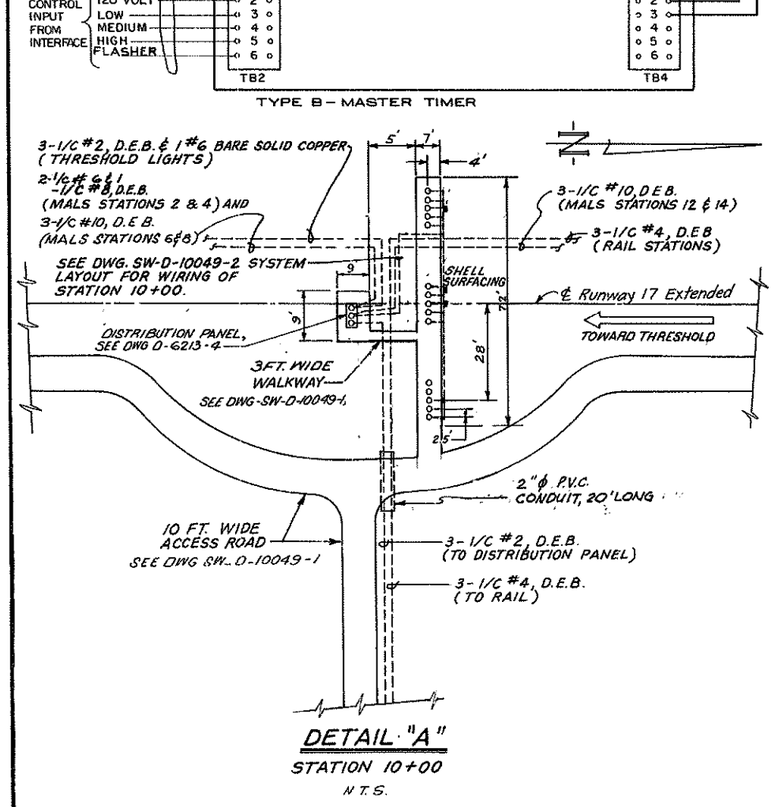

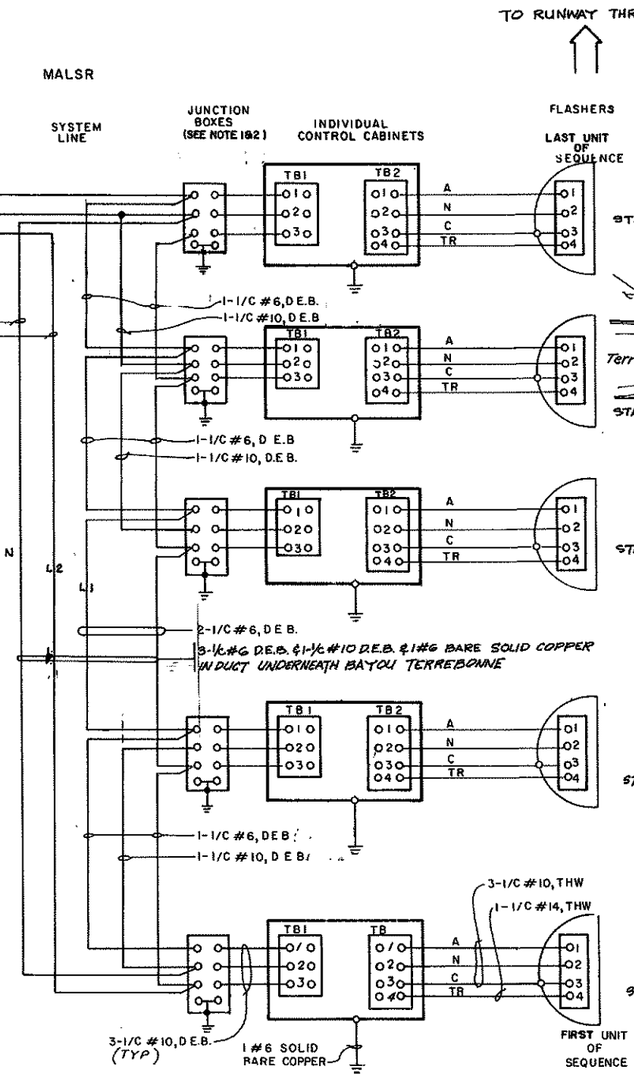

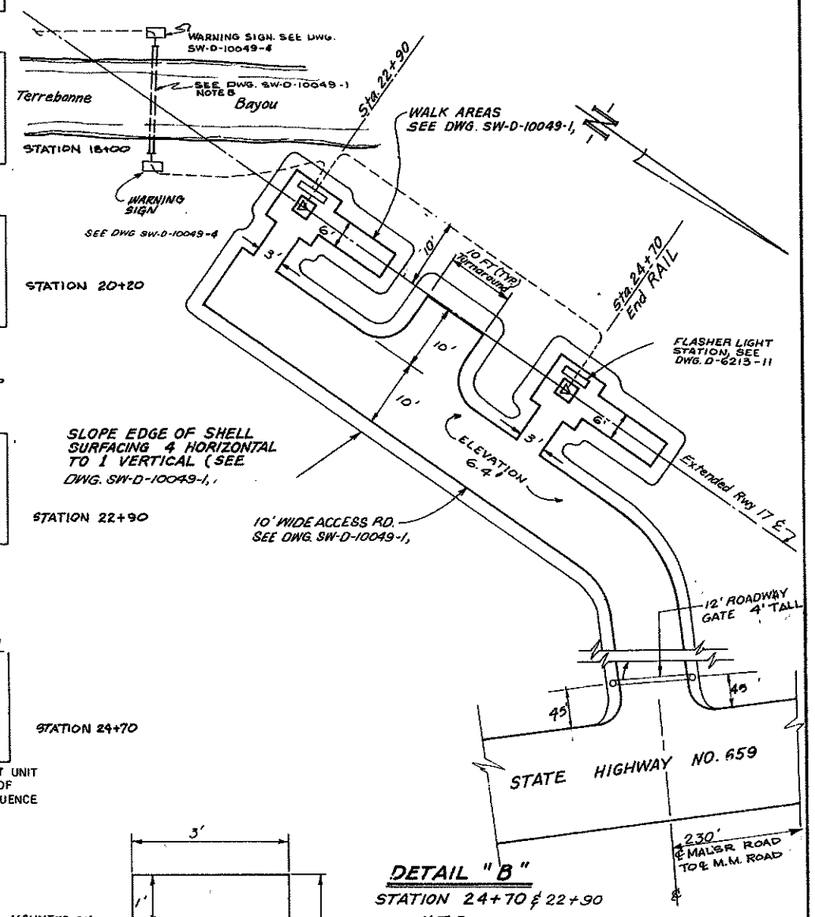

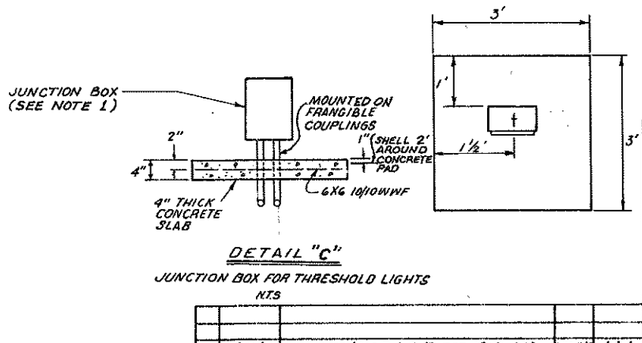

REV	DATE	DESCRIPTION	DRTG	CHECKED
1	8/20/85	As Built (Per D.J.C. Dated 12-9-85)	EBING	J.L.L.

DEPARTMENT OF TRANSPORTATION
FEDERAL AVIATION ADMINISTRATION
SOUTHWEST REGION — FORT WORTH, TEXAS

RAIL

WIRING DIAGRAM

HOUMA (HOUMA-TERREBONNE) LOUISIANA

SUBMITTED	APPROVED
CHIEF OF SECTION, ASW-442	CHIEF OF BRANCH, ASW-440

REVIEWED	DESIGNED D.J.C.	ISSUED BY AIRWAY FACILITIES DIVISION	DATE: 3-9-83
	DRAWN TMR/JLL		DRAWING NO. SW-D-10049-3
	CHECKED		

SW FORM 6000 791

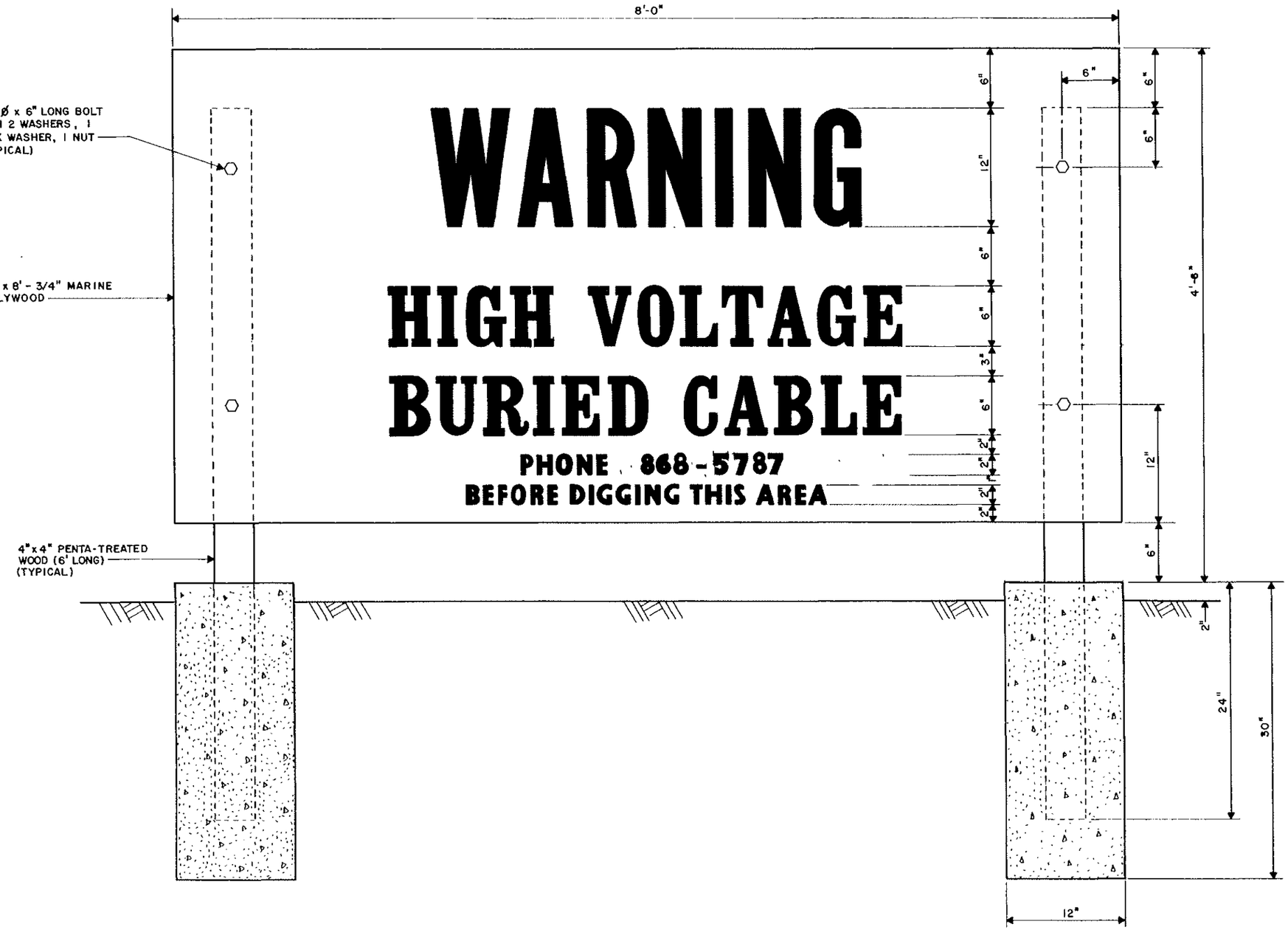

NOTES:

1. FACED SIGNS TOWARD ROADS AND BAYOU. LOCATED AS PER DRAWING SW-D-10049-1.
2. BEFORE PAINTING, CLEANED WOOD SURFACE OF DIRT, OIL AND OTHER FOREIGN SUBSTANCES WITH MINERAL SPIRITS. THE SURFACE SHALL BE COMPLETELY FREE FROM SURFACE MOISTURE AND THE ATMOSPHERIC TEMPERATURE BE MAINTAINED AT A MINIMUM OF 45°F AND A MAXIMUM OF 95°F. PAINT COMPLETELY FREE FROM SURFACE STRAINED AND KEPT AT A UNIFORM CONSISTENCY DURING APPLICATION. THE PRIMER COAT SHALL CONFORM TO FEDERAL SPECIFICATION TT-P-25, PRIMER, PAINT, EXTERIOR (UNDERCOAT FOR WOOD, READY-MIXED, WHITE AND TINTS). THE INTERMEDIATE AND FINISH COAT SHALL BE LUSTERLESS (OR FLAT) WHITE # 37875 AS PER FEDERAL STANDARD NO. 595a EPOXY PAINT. LETTERING TO BE EPOXY LUSTERLESS BLACK # 37038 AS PER FEDERAL STANDARD NO. 595a WITH THE MEETING LINE BETWEEN COLORS BEING STRAIGHT AND SHARPLY DEFINED, WITH NO BLENDING, RUNNING OR GAPS. SUFFICIENT TIME SHALL ELAPSE BETWEEN SUCCESSIVE COATINGS TO PERMIT PROPER DRYING. THE WARNING SIGN SHALL NOT HAVE ANY PAINT FAILURES SUCH AS PEELING, BLISTERING, ALLIGATORING, CRACKING, CHECKING OR CURLING.

SCALE: 3/16" = 1"

REV	DATE	DESCRIPTION	DFTG	CHECKED
1	6/22/85	AS-BUILT (PER D.J.C. DATED 12-9-85)	LTS MHC	J.L.L.

DEPARTMENT OF TRANSPORTATION
FEDERAL AVIATION ADMINISTRATION
SOUTHWEST REGION — FORT WORTH, TEXAS

MALSR
(RUNWAY 17)

WARNING SIGN

HOUMA (Houma-Terrebonne Airport) LOUISIANA

SUBMITTED: John L. Barrett — CHIEF OF SECTION, ASW-442
APPROVED: [signature] — CHIEF OF BRANCH, ASW-4[illegible]

REVIEWED
DESIGNED DJC
DRAWN Pdm
CHECKED
ISSUED BY: AIRWAY FACILITIES DIVISION
DATE: MARCH 9, 1983
DRAWING NO. SW-D-10049-4

SW FORM 6000-14 (10-80)

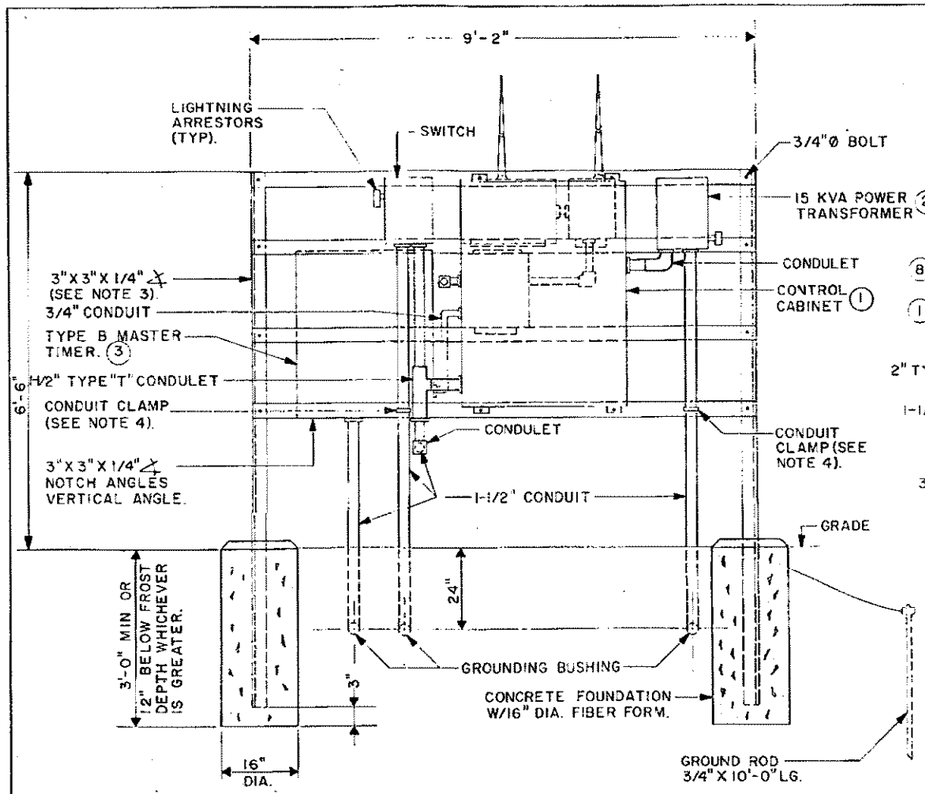

FRONT ELEVATION OF POWER & CONTROL STATION

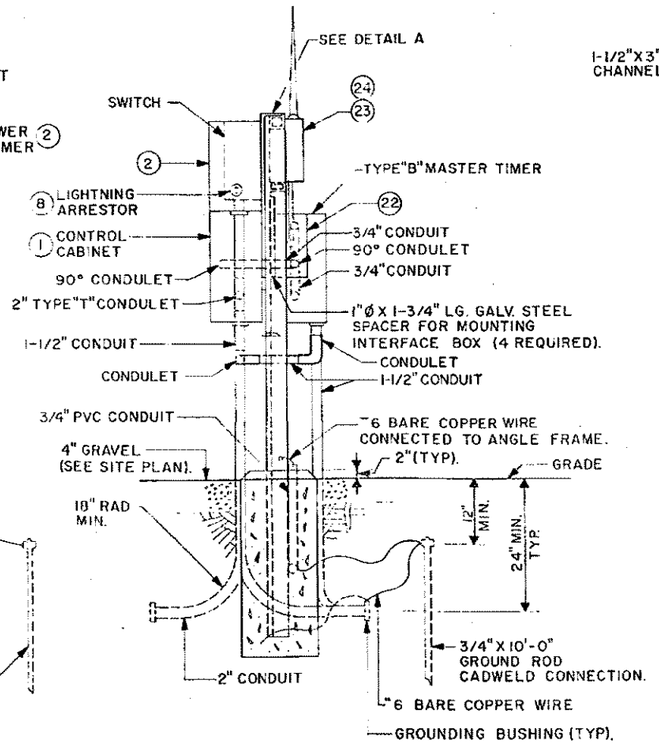

SIDE ELEVATION OF POWER & CONTROL STATION

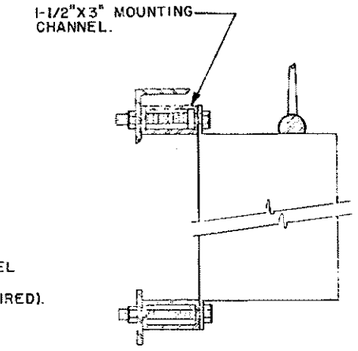

MOUNTING DETAIL "A"

(FOR AIR-GROUND CONTROLLER & GRD. TO GRD. DECODER).

NOTES:

1. FOR LOCATION OF POWER & CONTROL STATION SEE SITE PLAN.
2. CONDUITS & NIPPLES SHALL BE IN SIZES SHOWN & SHALL BE GALVANIZED. TERMINATE EACH CONDUIT & EACH NIPPLE IN A GROUNDED INSULATED BUSHING. USE TWO LOCKNUTS AT EACH ENTRANCE INTO CABINETS.
3. 3"X3"X1/4" ANGLES SHALL BE BOLTED SECURELY USING 3/4"Ø BOLTS, NUTS & LOCKWASHERS. ADDITIONAL ANGLES AND/OR STRAPS SHALL BE USED & POSITIONED AS REQUIRED TO FIRMLY MOUNT ALL EQUIPMENT TO FRAME.
4. CONDUITS SHALL BE SECURED TO ANGLES WITH "U" CLAMPS AND SPACERS WHEN REQUIRED FOR RIGIDITY.
5. POWER DISCONNECT SWITCH, 240 VOLT, 100 AMP, 3 WIRE WITH NEUTRAL LUG IN NEMA RAINTIGHT ENCLOSURE. NEMA TYPE H.D. LOCKABLE TYPE, NON-FUSIBLE.
6. GROUND-TO-GROUND CONTROL-INSTALL THE RECEIVER ON EITHER SIDE OF THE CONTROL CABINET AS DESIRED.
7. AIR-TO-GROUND CONTROL-INSTALL THE RECEIVER ON EITHER SIDE OF THE CONTROL CABINET AS DESIRED.
8. GROUND-TO-GROUND AND AIR-TO-GROUND-INSTALL THE RECEIVER-DECODER, THE INTERFACE BOX, AND THE RECEIVER CONTROLLER.
9. SEE DRAWING D-6213-2 FOR ITEMS REFFERENCED BY CIRCLED NUMBERS.

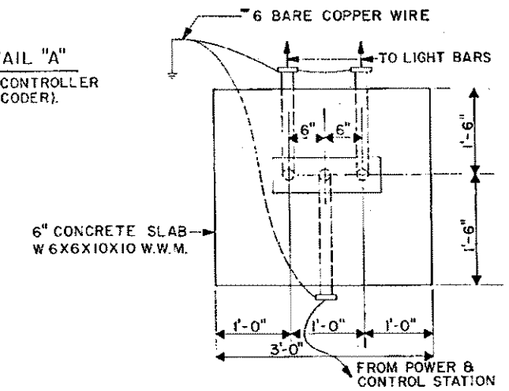

PLAN

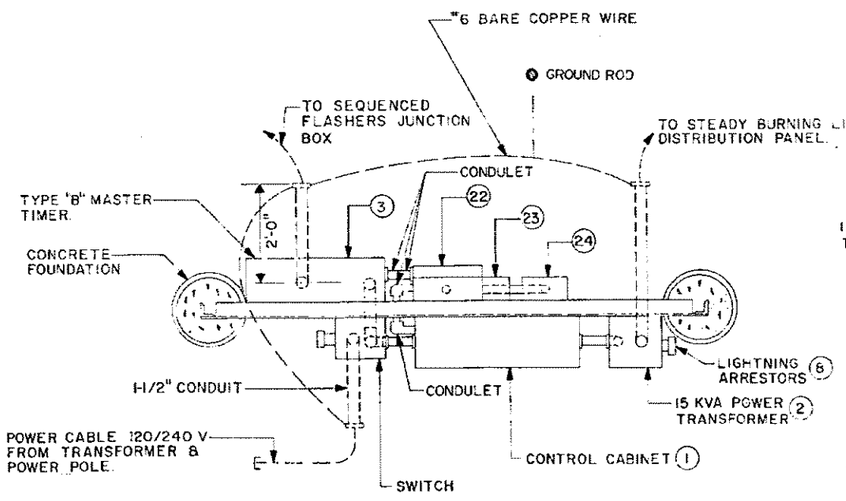

PLAN OF POWER CONTROL STATION

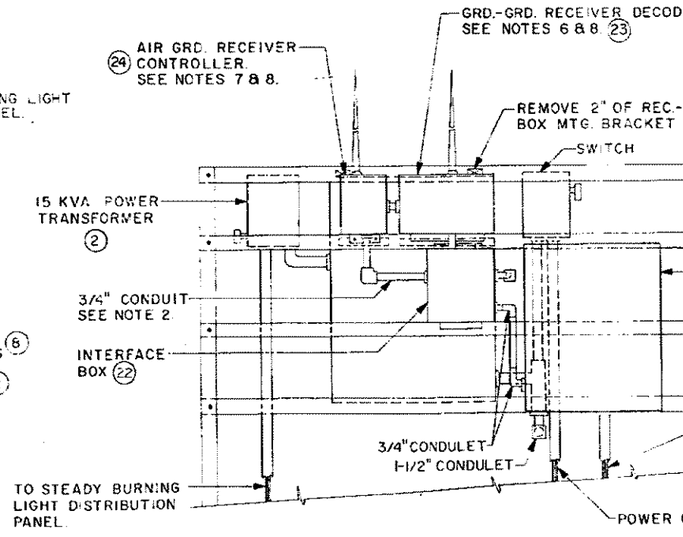

PART OF REAR ELEVATION OF POWER & CONTROL STATION

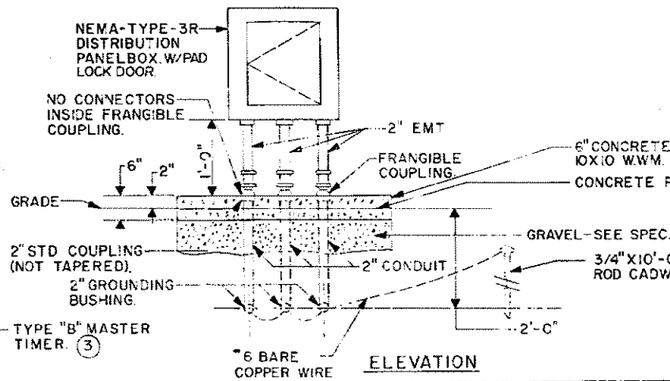

ELEVATION

REMOTE RADIO CONTROL SYSTEM

DEPARTMENT OF TRANSPORTATION
FEDERAL AVIATION ADMINISTRATION
WASHINGTON, D.C. 20591

MALS R W/THRESHOLD LIGHTS
LOW IMPACT RESISTANT STRUCTURE
POWER AND CONTROL STATION
EQUIPMENT MOUNTING DETAILS

REVISED BY	SUBMITTED BY	APPROVED BY
	A. FROEHLICH	F. GILMORE
	HQ, AAF-533	CHIEF, ENGINEERING & TECH. DIV., AAF-500
DESIGNED BY	ISSUED BY: AIRWAY FACILITIES SERVICE	DATE: SEPTEMBER 5, 1978
DRAWN BY		DRAWING NO. D-6213-4
TRACED BY		REV. LTR.

REV. LTR.	DATE	DESCRIPTION	CHECKED/APPROVED

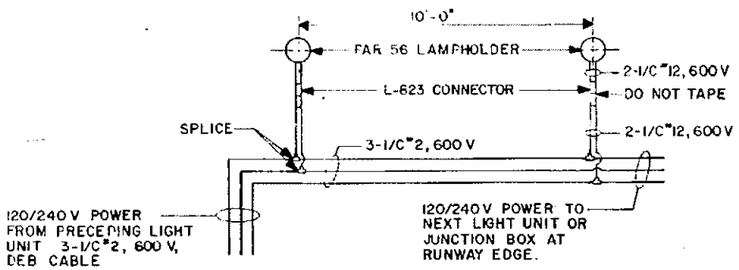

WIRING DIAGRAM FOR TWO LIGHTS

TYPICAL FOR ANY NUMBER OF UNITS (GROUNDING CONDUCTOR NOT SHOWN)

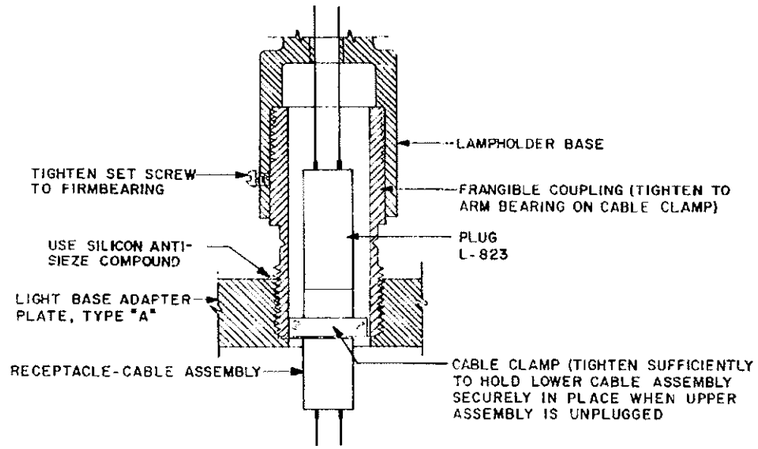

DETAIL "A"

GROUND MOUNTING

NOTES:

1. ALL LAMP BASES(CANS)SHALL BE GROUNDED AS SHOWN IN SECTION "A-A". THE GROUND WIRE SHALL BE RUN THROUGH EACH BASE IN THE LIGHT BARS AND GROUNDED AT EACH CAN TO THE #6 BARE COPPER COUNTERPOISE. SEE DWG. D-6213-2 FOR LOCATION OF COUNTERPOISE GROUND RODS.
2. CONCRETE FOUNDATION TO HAVE A MINIMUM DEPTH OF 2'-6" OR BE BELOW LOCAL FROST LINE, WHICH EVER DEPTH IS GREATER.
3. THE TOP OF THE LIGHT BASE FLANGE SHALL BE RECESSED 1 3/8" BELOW THE CONCRETE SURFACE OF THE FOUNDATION TO PERMIT THE INSTALLATION OF THE GASKET AND ADAPTER PLATE (TYPE "A") SHALL BE FLUSH WITH PAD SURFACE AFTER INSTALLATION.
4. EVERY OTHER LIGHT CONNECTS TO ALTERNATE CIRCUIT IN THE THRESHOLD BAR.

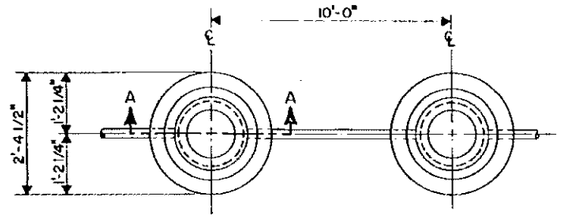

PLAN

SCALE 3/4"=1'-0"

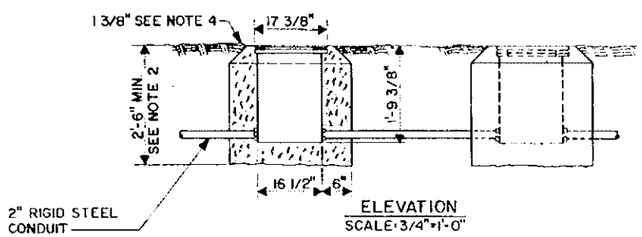

ELEVATION

SCALE 3/4"=1'-0"

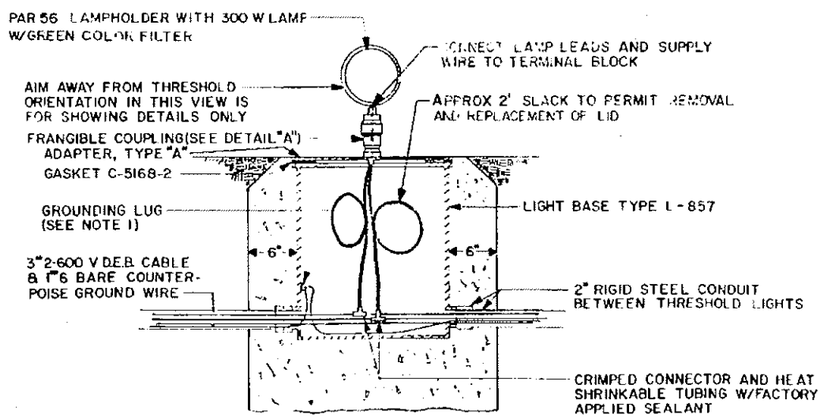

SECTION "A-A"

ELECTRICAL DETAILS OF A SINGLE UNIT

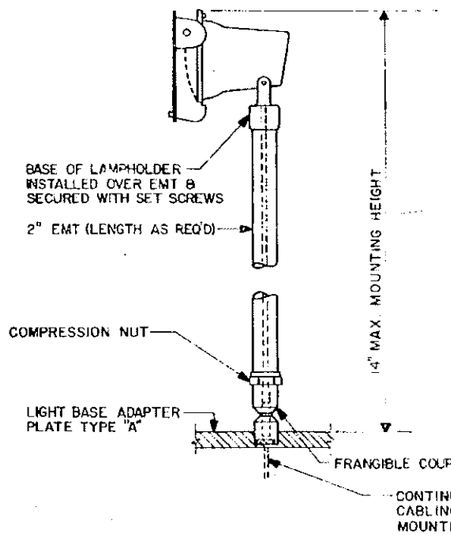

DETAIL "C"

ELEVATED MOUNTING

REV LTR	DATE	DESCRIPTION	CHECKED	APPROVED

DEPARTMENT OF TRANSPORTATION
FEDERAL AVIATION ADMINISTRATION
WASHINGTON, D.C. 20591

MALSR W/THRESHOLD LIGHTS AND LOW IMPACT RESISTANT STRUCTURE
THRESHOLD LIGHT DETAILS

REVIEWED BY	SUBMITTED BY	APPROVED BY
	A. FROEHLICH	

DESIGNED BY	ISSUED BY	DATE	REV LTR
DRAWN BY	AIRWAY FACILITIES SERVICE		
CHECKED BY		DRAWING NO. D-6213-5	

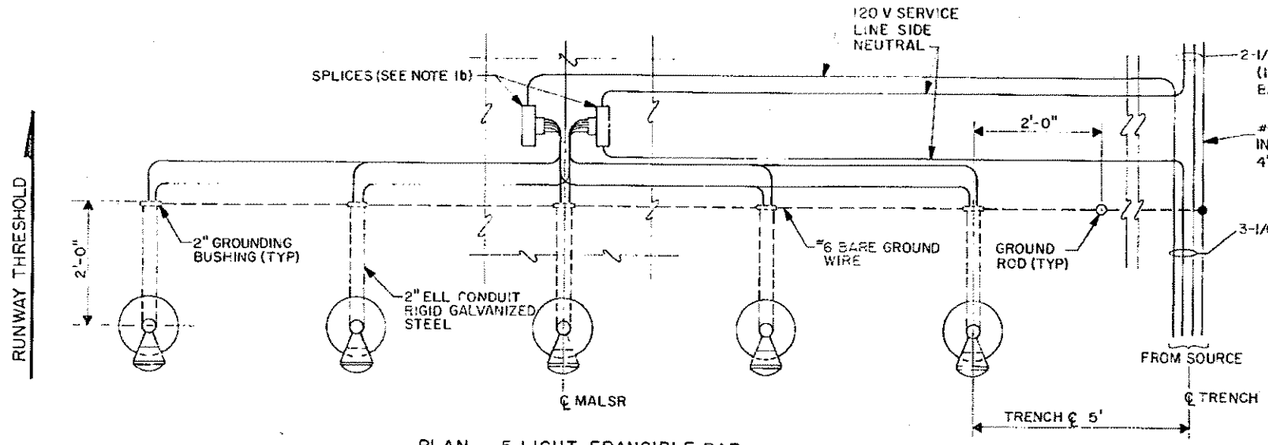

PLAN – 5 LIGHT FRANGIBLE BAR

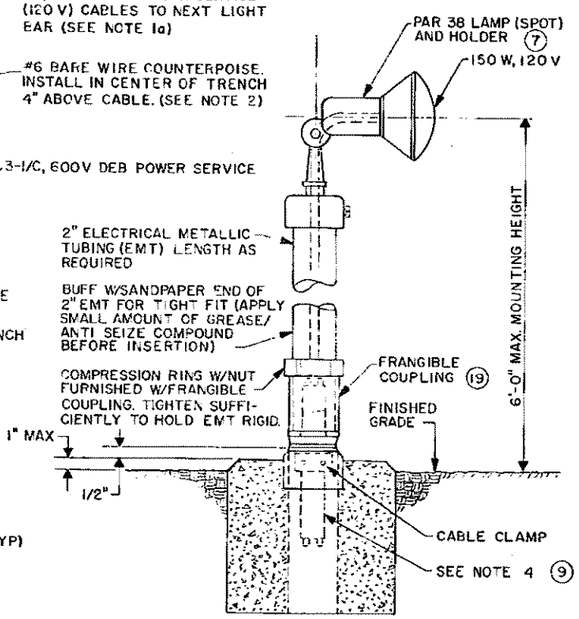

DETAIL "A"

NOTES:

1a. THE POWER CABLES SHALL BE CONTINUOUS BETWEEN THE LIGHT STATIONS. IF SPLICES ARE REQUIRED, THEY SHALL BE OF THE "EPOXY-RESIN" TYPE WITH PLASTIC SHELL. THE CONDUCTORS SHALL BE JOINED WITH SOLDERLESS WIRE CONNECTORS.

1b. "TEE" SPLICES FOR SPLICING THE #12 WIRES OF THE LOWER CABLE CONDUCTORS TO THE POWER SERVICE CABLES SHALL BE JOINED WITH SOLDERLESS WIRE CONNECTORS AN OUTER SHELL FILLET WITH EPOXY-RESIN SHALL BE USED.

2. LONG SECTIONS OF COUNTERPOISE WIRE SHALL BE CONNECTED TO A GROUND ROD ON AT LEAST 400 FT. SPACINGS.

3. LEAVE 3 FEET SLACK IN EACH CABLE AT EACH LIGHT BAR.

4. FIELD ATTACHED CONNECTOR, L-823 PLUG AND RECEPTACLE (AC 150-5343-26A)

5. COUPLING THREADS TO BE CLEANED AND COATED WITH SILICONE ANTI-SEIZE COMPOUND.

6. SEE DRAWING D-6213-2 FOR EQUIPMENT IDENTIFICATION.

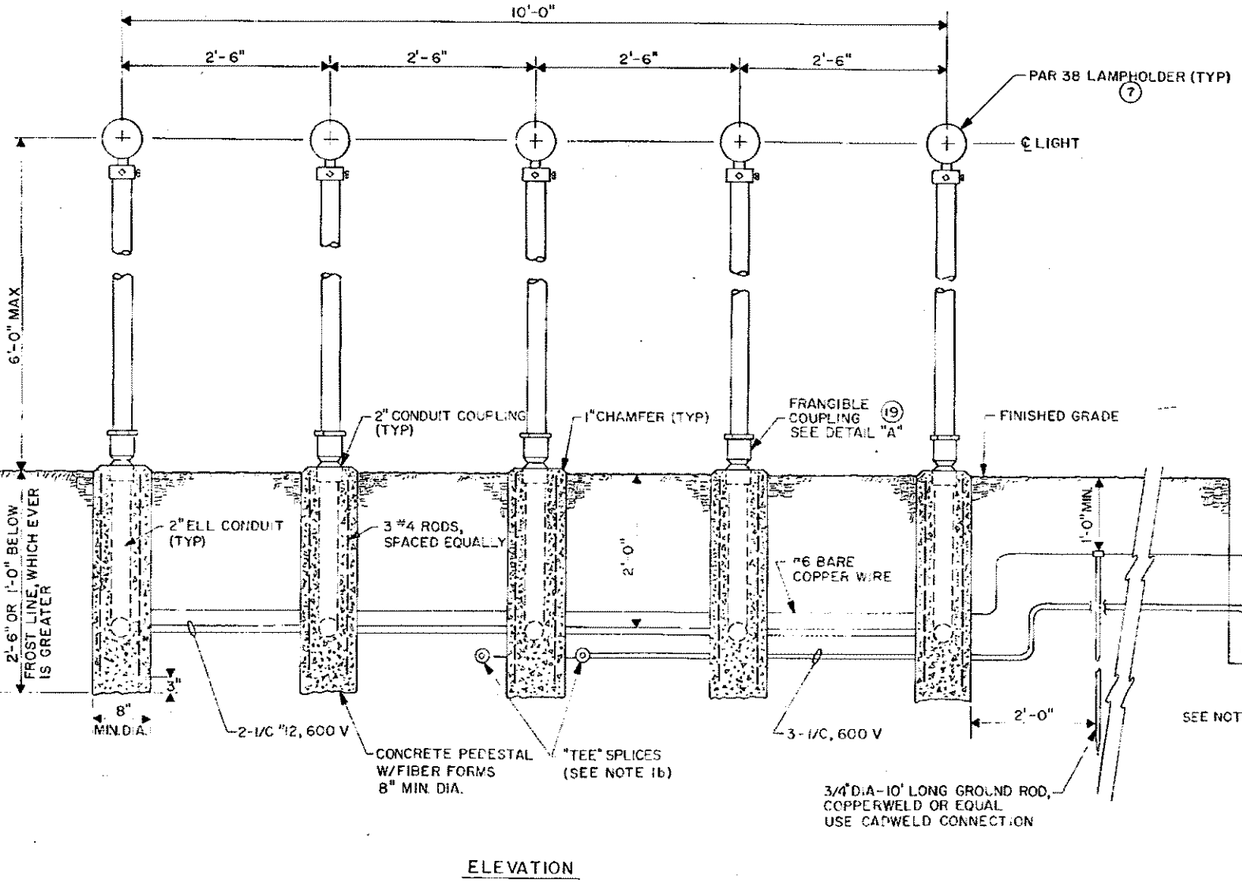

ELEVATION

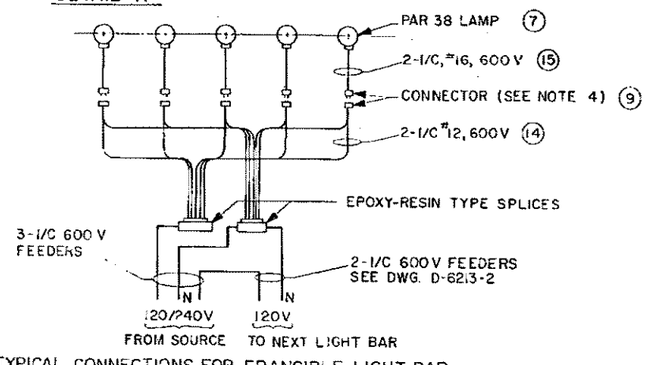

TYPICAL CONNECTIONS FOR FRANGIBLE LIGHT BAR

REV LTR	DATE	DESCRIPTION	CHECKED	APPROVED

DEPARTMENT OF TRANSPORTATION
FEDERAL AVIATION ADMINISTRATION
WASHINGTON, D.C. 20591

MALSR W/THRESHOLD LIGHTS AND LOW IMPACT RESISTANT STRUCTURE UP TO 6'-0" MOUNTING HEIGHT FRANGIBLE LIGHT BAR

DESIGNED BY	SUBMITTED BY	APPROVED BY
	A. FROEHLICH	F. GILMORE
	ELECTRO/MECHANICAL BR, AAF-530	CHIEF, ENGINEERING SYSTEM DIV., AAF-500
DESIGNED BY	ISSUED BY	DATE
DRAWN BY	AIRWAY FACILITIES SERVICE	NOVEMBER 15, 1991
CHECKED BY		DRAWING NO. D-6213-7
		REV LTR

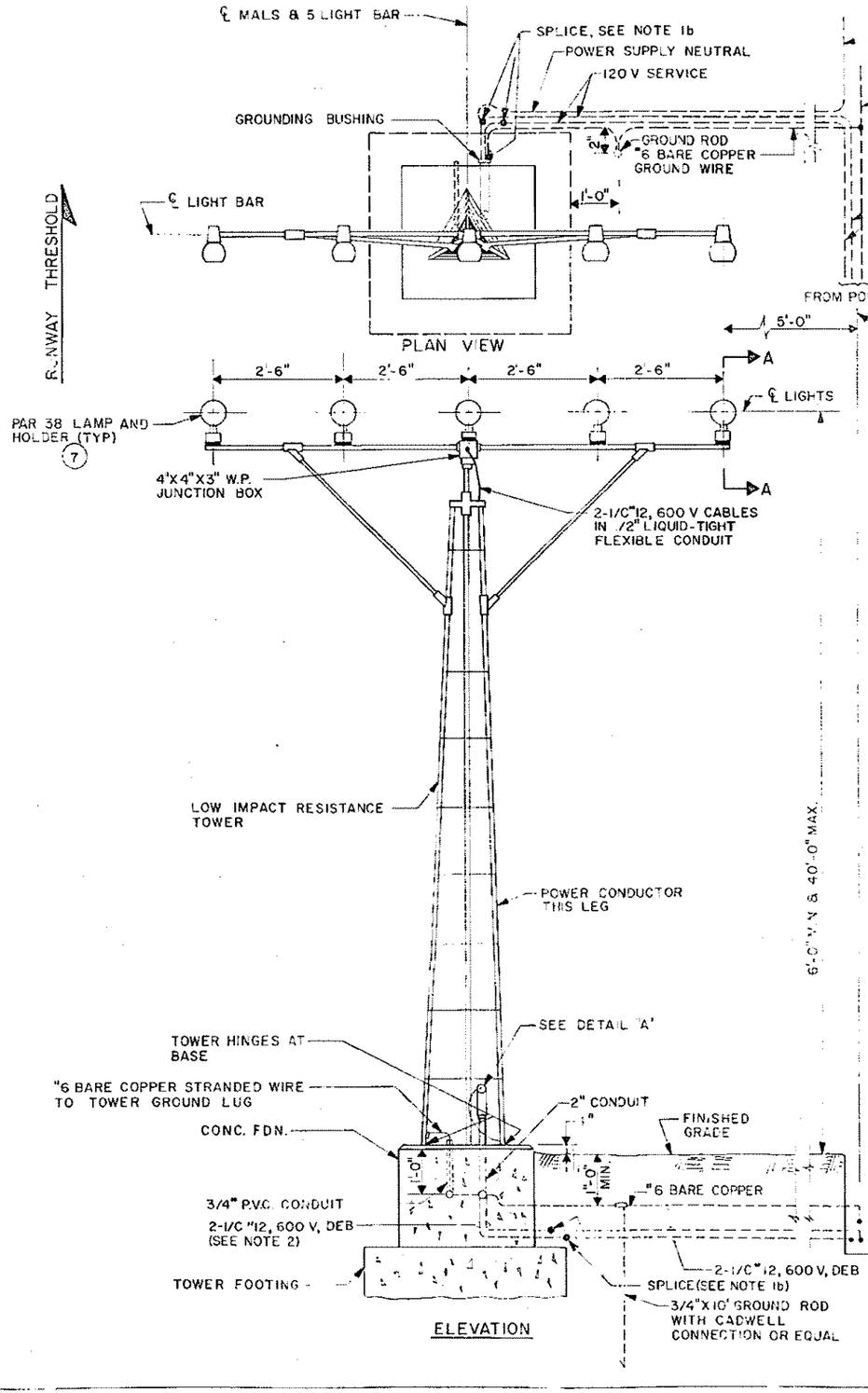

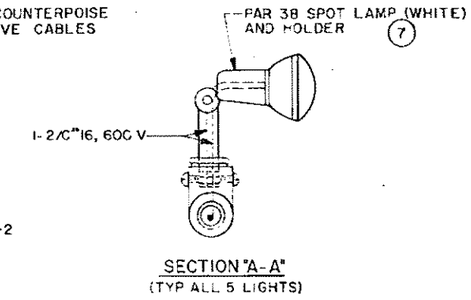

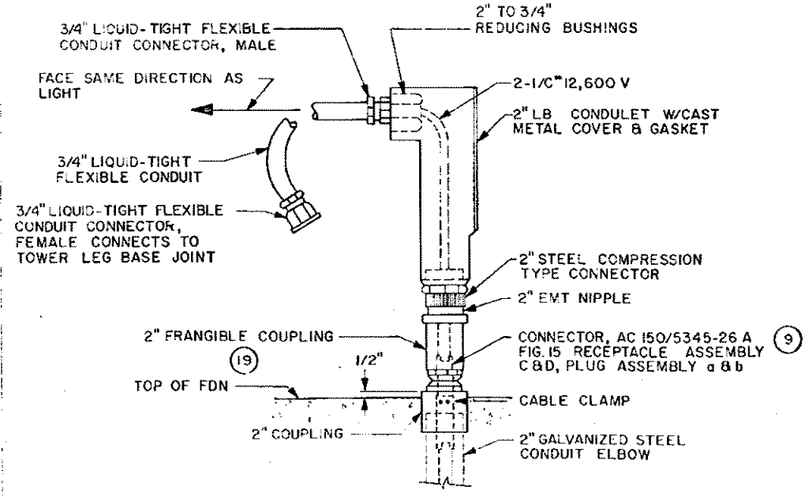

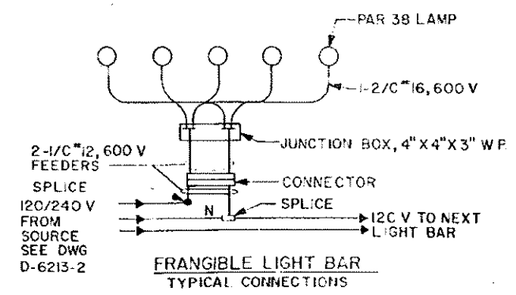

NOTES:

1a THE POWER CABLES SHALL BE CONTINUOUS BETWEEN THE LIGHT STATIONS. IF SPLICES ARE REQUIRED, THEY SHALL BE OF THE "EPOXY-RESIN" TYPE WITH PLASTIC SHELL. THE CONDUCTORS SHALL BE EQUIPPED WITH SOLDERLESS WIRE CONNECTORS

1b "TEE" SPLICES FOR SPLICING THE #12 WIRES OF THE LOWER CABLE ASSEMBLY CONDUCTORS TO THE POWER SERVICE CABLES SHALL BE SECURED WITH SOLDERLESS WIRE CONNECTORS. AN OUTER PLASTIC SHELL, FILLED WITH EPOXY-RESIN SHALL BE USED.

2. LEAVE 3 FEET SLACK IN EACH CABLE AT EACH LIGHT BAR.

3. TOWER FOUNDATION SHALL BE CONSTRUCTED IN ACCORDANCE WITH D-6213-10.

REV LTR	DATE	DESCRIPTION	CHECKED	APPROVED

DEPARTMENT OF TRANSPORTATION
FEDERAL AVIATION ADMINISTRATION
WASHINGTON, D.C. 20591

MALSR W/THRESHOLD LIGHTS AND LOW IMPACT RESISTANT STRUCTURE 6'-0" TO 40'-0" MOUNTING HEIGHT STEADY-BURNING LIGHT DETAILS

REVIEWED BY	SUBMITTED BY	APPROVED BY
	A. ERICKSON	F. DEMORE
DESIGNED BY	ISSUED BY	DATE —
DRAWN BY	AIRWAY FACILITIES SERVICE	DRAWING NO. D-6213-8
CHECKED BY		REV LTR

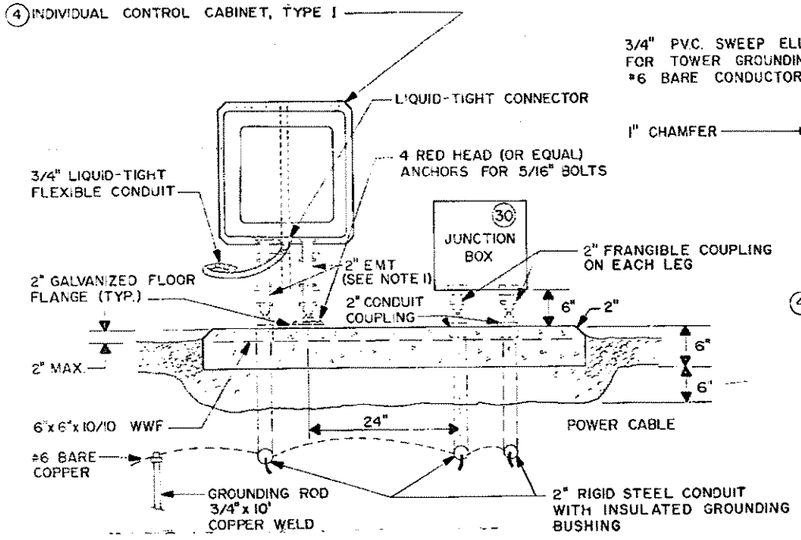

SECTION "A-A"

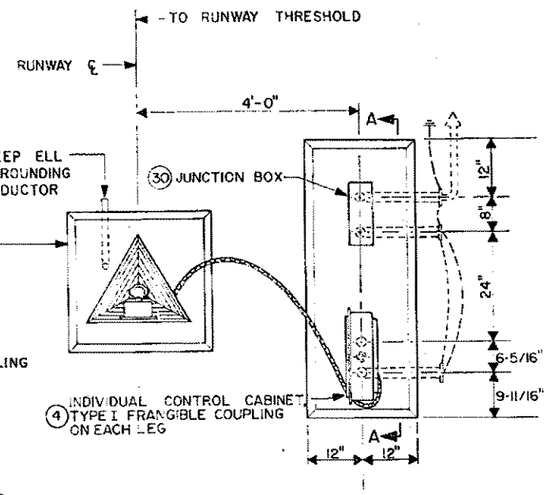

PLAN

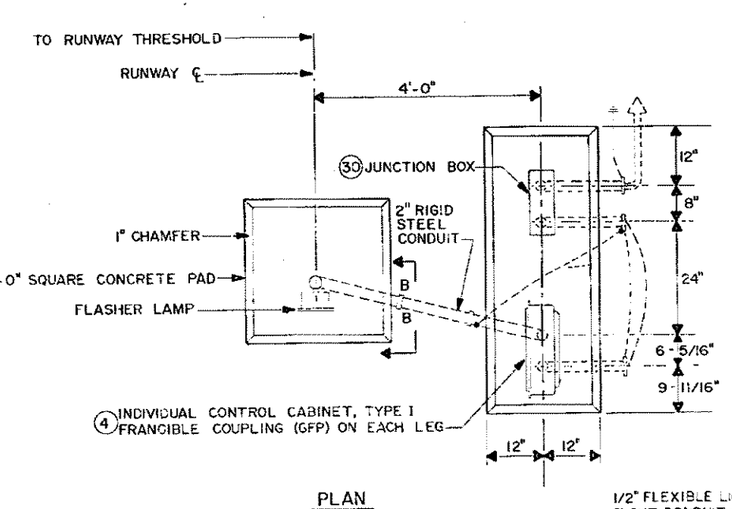

PLAN
6'-0" AND UNDER INSTALLATIONS

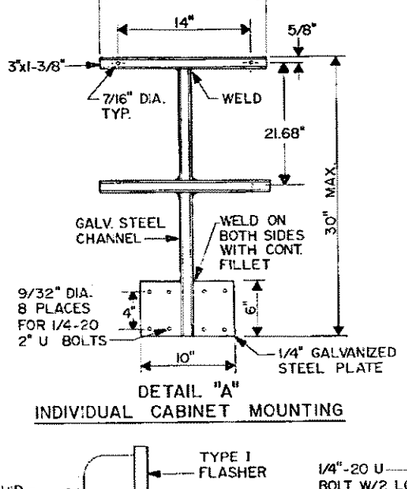

DETAIL "A"
INDIVIDUAL CABINET MOUNTING

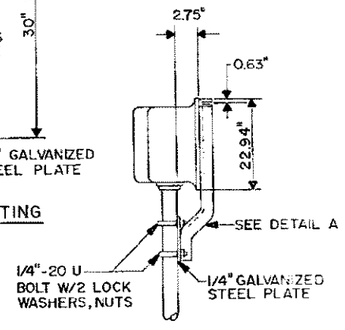

DETAIL "B"

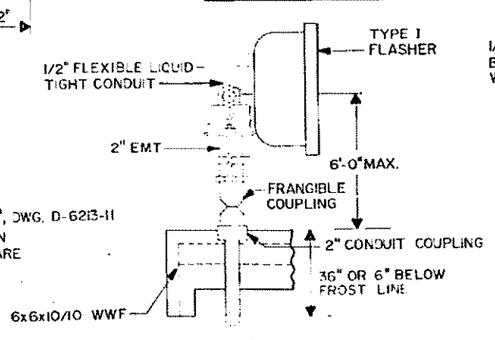

SECTION "B-B"

NOTES: THE CONTRACTOR SHALL CONSTRUCT THE RAIL SUCH THAT--

1. EMT CONDUIT IS USED WHERE DESIGNATED WITH NO SUBSTITUTION.
2. LATERAL TRENCH FROM STRUCTURE TO ℄ CABLE RUN IS A MINIMUM OF 24" DEEP.
3. FLASHER TOWER STATION HAS A TOWER MAINTAINANCE AREA, DETAIL "A", DWG. D-6213-11
4. CABLES AND CONNECTIONS FOR POWER AND CONTROL TO THE JUNCTION BOX, CONTROL CABINET, AND THE FLASHER REMOTE HEAD ASSEMBLY ARE PER DRAWING D-6213-3.
5. A WARNING SIGN, SHALL BE INSTALLED ON THE TOWER, DWG. D-6081.
6. TYPE FA-9985 SEQUENCED FLASHING LIGHT PURCHASED UNDER CONTRACT DTFA-01-C-20051.

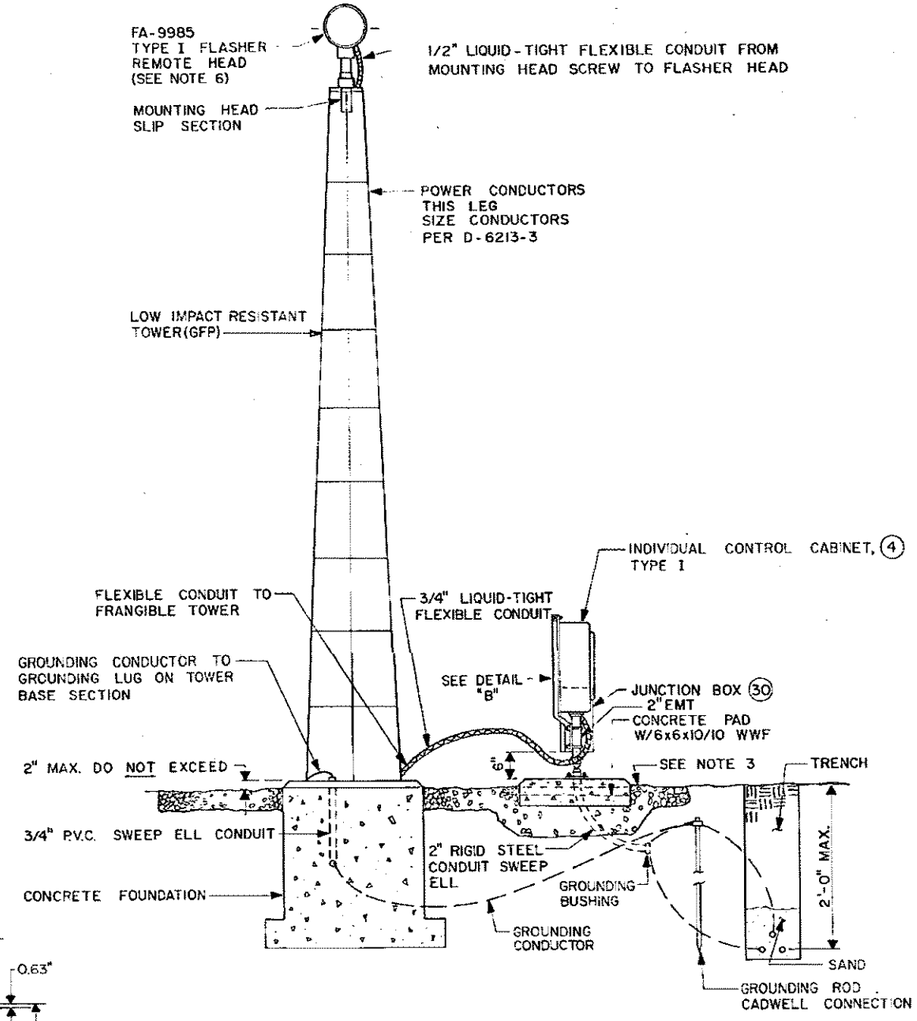

ELEVATION
SEQUENCED FLASHER-FRANGIBLE ALUMINUM TOWER

REV. LTR	DATE	DESCRIPTION	CHECKED	APPROVED

DEPARTMENT OF TRANSPORTATION
FEDERAL AVIATION ADMINISTRATION
WASHINGTON, D.C. 20591

MALSR W/THRESHOLD LIGHTS AND
LOW IMPACT RESISTANT STRUCTURE
6'-0" TO 40'-0" MOUNTING HEIGHT
FLASHER LIGHT INSTALLATION DETAILS

REVIEWED BY	SUBMITTED BY	APPROVED BY
CHIEF, [illegible] MECHANICAL BR., AAF-530	CHIEF, ENVIRONMENTAL [illegible] DIV., AAF-[illegible]	
DESIGNED BY	ISSUED BY	DATE — SEPTEMBER 15, 1981
DRAWN BY	AIRWAY FACILITIES SERVICE	DRAWING NO. D-6213-9
CHECKED BY		REV. LTR.

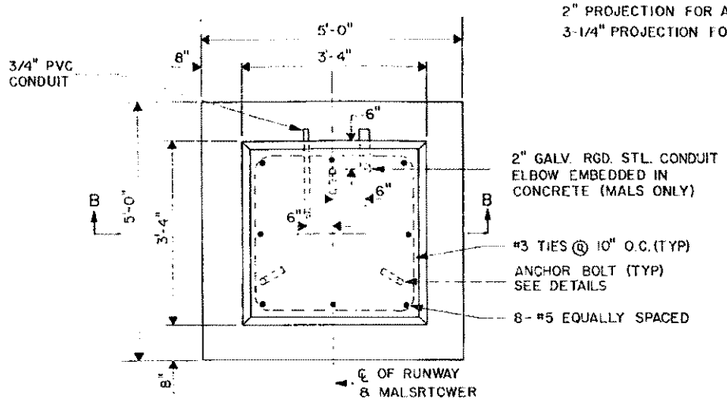

PLAN

FOUNDATION TYPE II
(TOWER HEIGHTS 6'-0" TO 20'-11")

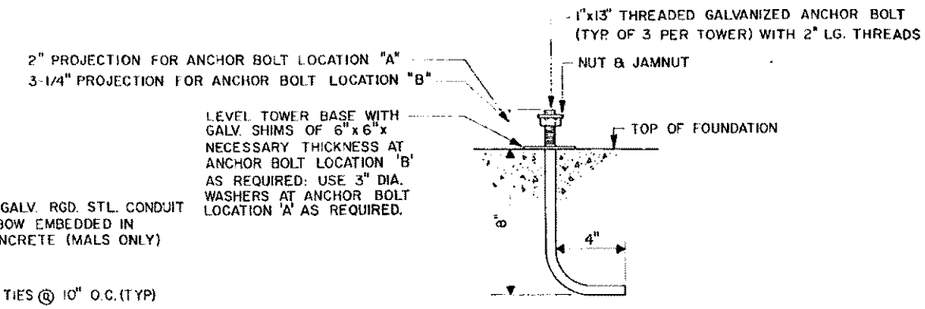

ANCHOR BOLT DETAILS

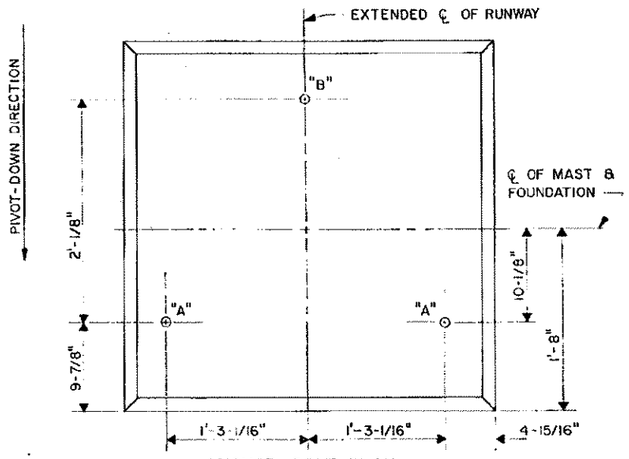

ANCHOR BOLT PLAN

FOR TOWER HEIGHTS (6'-0" TO 20'-11")

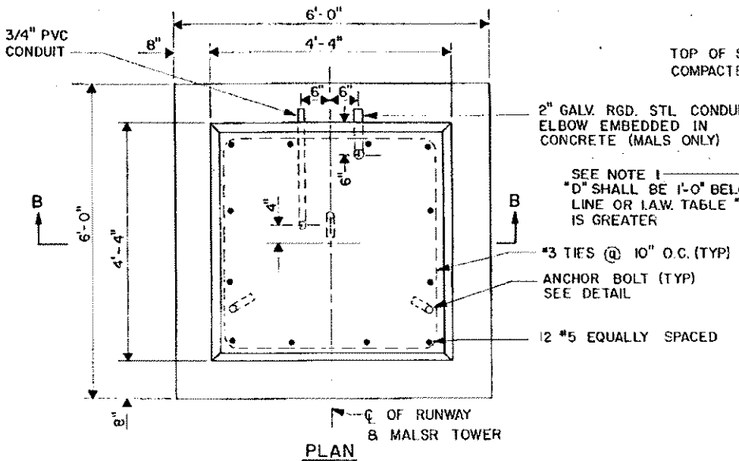

PLAN

FOUNDATION TYPE II
(TOWER HEIGHTS 21'-0" TO 40'-0")

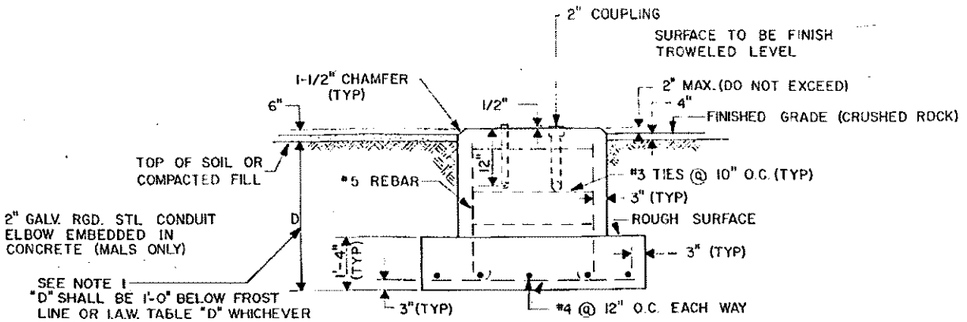

SECTION "B-B"

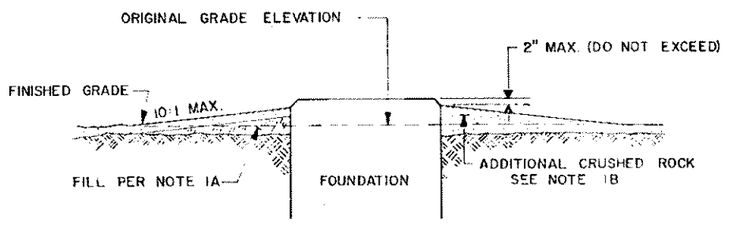

DETAIL "C"

FILL TO MAINTAIN 2" MAXIMUM FOUNDATION PROJECTION ABOVE FINISHED GRADE

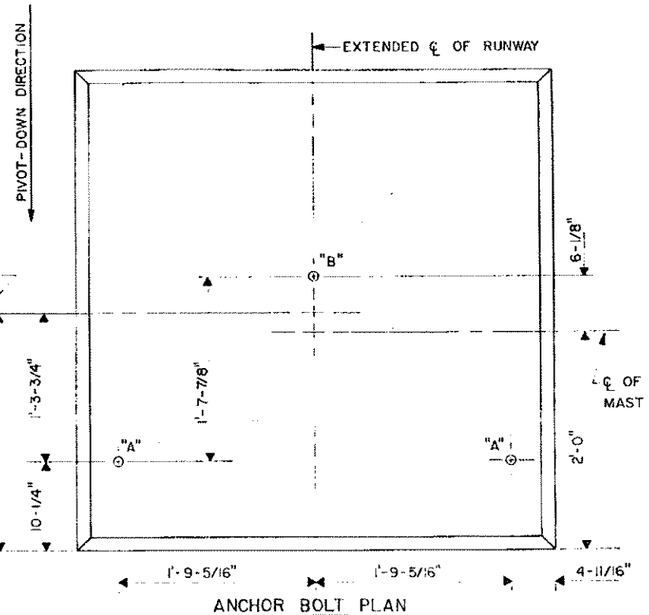

ANCHOR BOLT PLAN

FOR TOWER HEIGHTS (21'-0" TO 40'-0")

NOTES

1. IMPORTANT: IF FOUNDATION TOP ELEVATION ON SITE PLAN-PROFILE DRAWING IS MORE THAN 0'-2" HIGHER THAN ORIGINAL GRADE, THE CONTRACTOR SHALL:
   A. PLACE AND COMPACT EARTH FILL AROUND THE FOUNDATION TO SUCH A DEPTH THAT A 4" DEPTH OF CRUSHED ROCK ON TOP OF THE FILL WILL BRING THE FINISHED GRADE WITHIN 2" OF THE FOUNDATION TOP, OR
   B. PLACE AND COMPACT ADDITIONAL CRUSHED ROCK AROUND THE FOUNDATION TO BRING THE FINISHED GRADE WITHIN 2" OF THE FOUNDATION TOP.

   IN EITHER CASE, THE RESULTING SLOPE OF THE FINISHED GRADE AWAY FROM THE FOUNDATION SHALL NOT BE STEEPER THAN 10 HORIZONTAL TO 1 VERTICAL, SEE DETAIL "C".
2. THIS DRAWING GIVES INFORMATION FOR ALL TOWERS IN THE HEIGHT RANGE OF 6'-0" TO 40'-0". DISREGARD UNNECESSARY INFORMATION FOR TOWERS OUTSIDE THE HEIGHT RANGE OF THIS MALSR.
3. THIS DRAWING IS FOR STANDARD INSTALLATION OF LOW IMPACT RESISTANCE TOWER, TYPE SMA. SEE SPECIFIC DRAWING ON SITE LOCATION FOR FINAL ELEVATIONS

NOMINAL TOWER HEIGHT	DEPTH D
6'-0" TO 20'-0"	3'-0"
20'-0" TO 30'-0"	3'-6"
30'-0" TO 40'-0"	4'-0"

TABLE "D"

FOUNDATION DEPTH

REVISIONS			
REV LTR	DATE	DESCRIPTION	CHECKED / APPROVED

DEPARTMENT OF TRANSPORTATION
FEDERAL AVIATION ADMINISTRATION
WASHINGTON, D.C. 20591

MALSR W/THRESHOLD LIGHTS AND LOW IMPACT RESISTANT STRUCTURE 6'-0" TO 40'-0" MOUNTING HEIGHT LIR TOWER FOUNDATION DETAILS

DESIGNED BY	SUBMITTED BY	APPROVED BY
DRAWN BY	ISSUED BY: AIRWAY FACILITIES SERVICE	DATE
CHECKED BY		DRAWING NO: D-6213-10

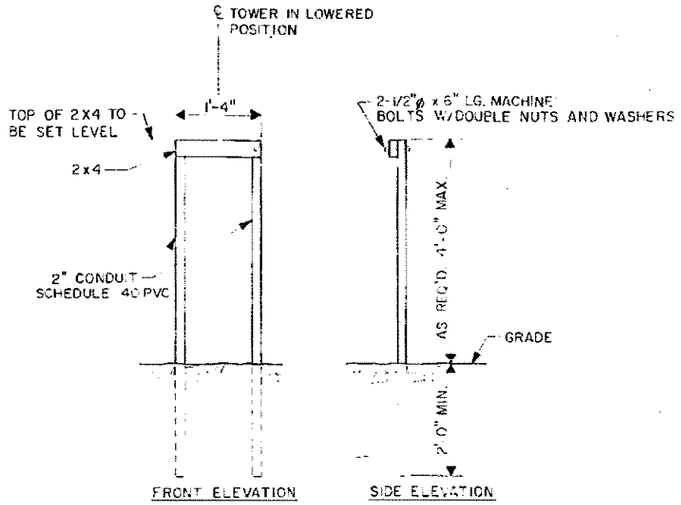

SINGLE TOWER MAINTENANCE STAND
(FOR LOCATION SEE DETAIL "A")

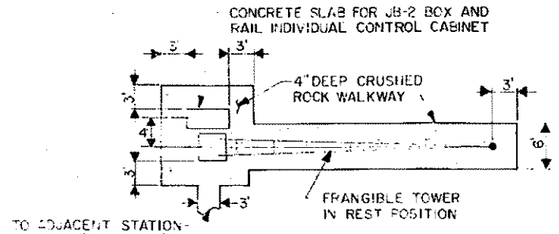

PLAN FOR RAIL FLASHER TOWER

NOTES:

1. THE TOWER MAINTENANCE STAND MAY BE LOCATED AT A DIFFERENT POINT DICTATED BY LOCAL CONDITIONS. CARE MUST BE EXERCISED WHILE SERVICING THE LOWERED TOWER TO PREVENT KINKING OR OTHER DAMAGE TO THE FRANGIBLE TOWER

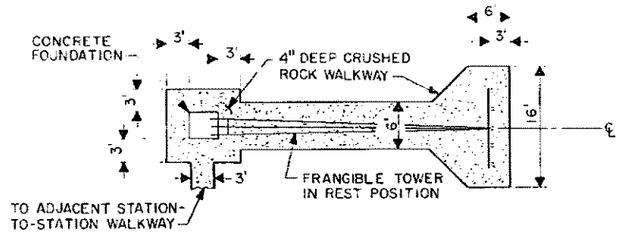

PLAN FOR MALS T-BAR TOWER
DETAIL "A" — TOWER MAINTENANCE AREA

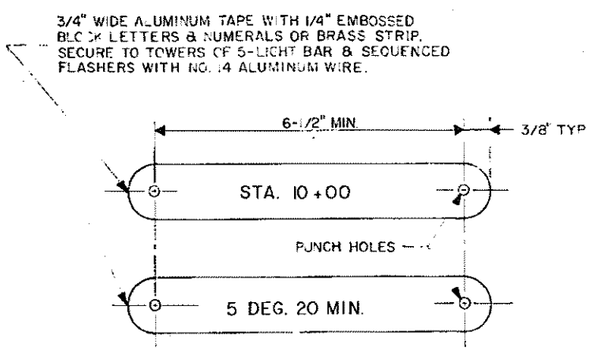

STATION & VERTICAL ANGLE IDENTIFICATION STRIPS

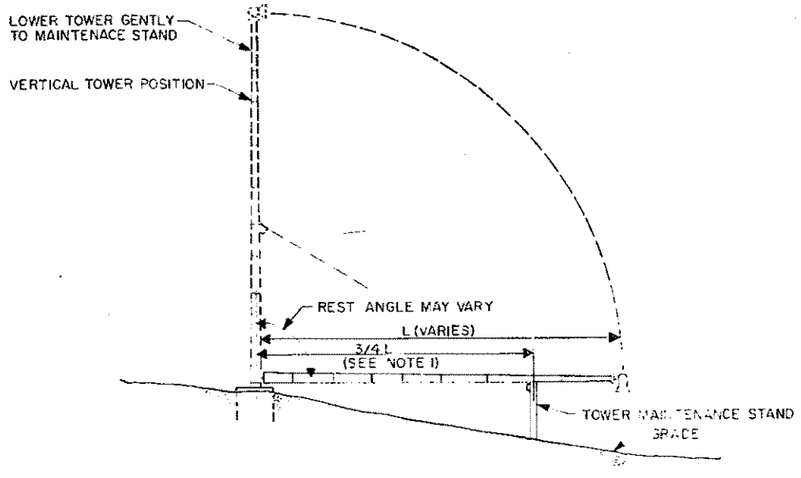

TOWER MAINTENANCE STAND LOCATION
DETAIL "B"

LOWERING DEVICE TO BE SUPPLIED BY MANUFACTURER OF TOWER

REV LTR	DATE	DESCRIPTION	CHECKED	APPROVED

DEPARTMENT OF TRANSPORTATION
FEDERAL AVIATION ADMINISTRATION
WASHINGTON, D.C. 20591

MALSR W/THRESHOLD LIGHTS AND LOW IMPACT RESISTANT STRUCTURE
6'-0" TO 40'-0" MOUNTING HEIGHT
MISCELLANEOUS DETAILS

SUBMITTED BY: A. FROEHLICH
CHIEF, ELECTRO/MECHAN. AL BR., AAF-530
APPROVED BY: [illegible]
CH, ENVIRONMENTAL [illegible]
DESIGNED BY
DRAWN BY
CHECKED BY
ISSUED BY: AIRWAY FACILITIES SERVICE
DATE — [illegible]
DRAWING NO. D-6213-11
REV LTR

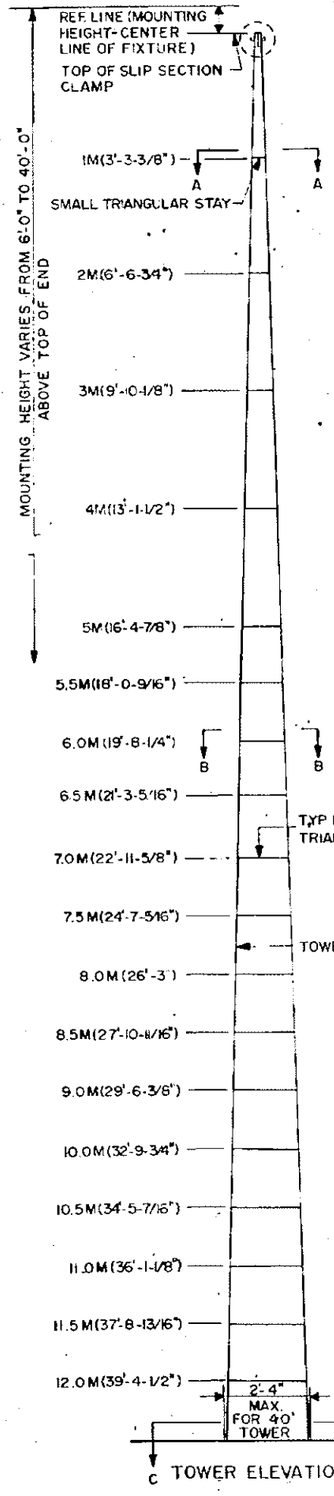

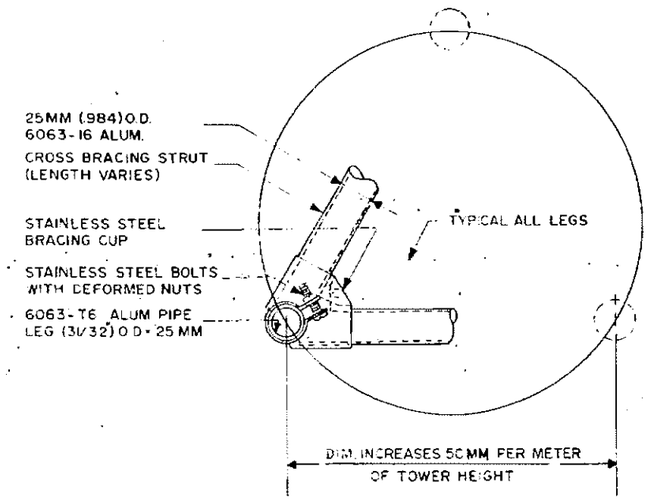

TYP SECTION "B-B"
(LARGE STAY)

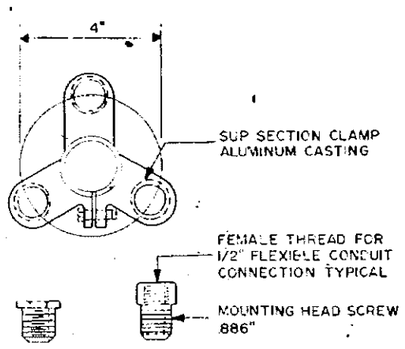

SLIP SECTION CLAMP
DETAIL "A"

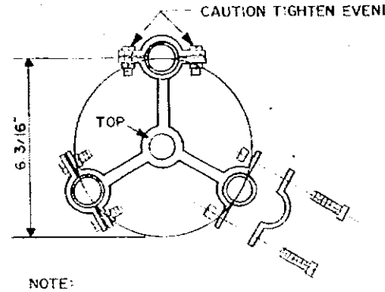

NOTE:
UNIT SHOULD BE INSTALLED WITH "TOP" & ARROWS TOWARDS TOP OF MAST.

SECTION A-A"
(SMALL STAY)

NOTES:
1. COAT ALL THREADS WITH SILICONE ANTI-SEIZE COMPOUND.
2. TOWERS SHALL BE CONSTRUCTED ACCORDING TO MANUFACTURERS INSTRUCTIONS.
3. TOWERS ARE MANUFACTURED BY JAQUITH INDUSTRIES INC. SYRACUSE, N.Y. 13205

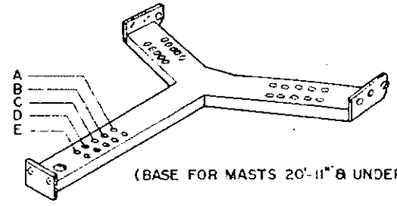

(BASE FOR MASTS 20'-11"& UNDER)

MAST HEIGHT FROM - TO		USE HOLES
6'-0"	8'-11"	A
9'-0"	11'-11"	B
12'-0"	14'-11"	C
15'-0"	17'-11"	D
18'-0"	20'-11"	E

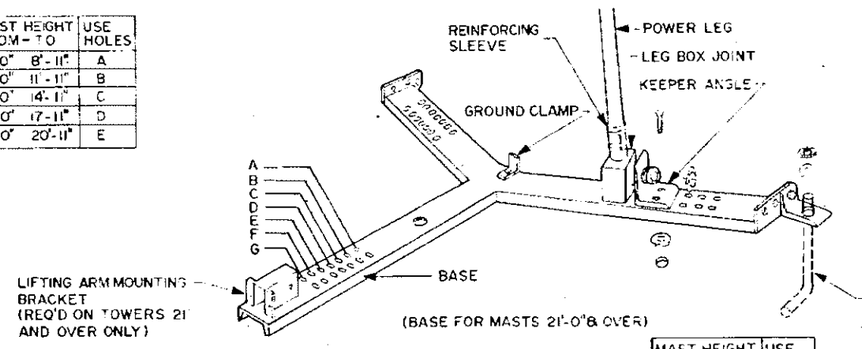

(BASE FOR MASTS 21'-0"& OVER)

BASE SECTION "C-C"

MAST HEIGHT FROM - TO		USE HOLES
21'-0"	23'-11"	A
24'-0"	26'-11"	B
27'-0"	29'-11"	C
30'-0"	32'-11"	D
33'-0"	35'-11"	E
36'-0"	38'-11"	F
39'-0"	40'-1"	G

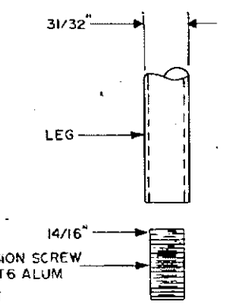

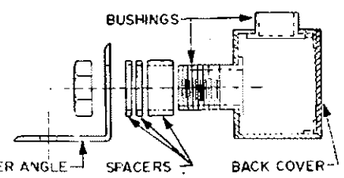

POWER LEG DETAIL
(CABLE NOT SHOWN)

DEPARTMENT OF TRANSPORTATION
FEDERAL AVIATION ADMINISTRATION
WASHINGTON, D.C. 20591

MALSR W/THRESHOLD LIGHTS AND LOW IMPACT RESISTANT STRUCTURE
6'-0" TO 40'-0" MOUNTING HEIGHT
STRUCTURAL ERECTION AND DETAILS

REVISED BY	SUBMITTED BY	APPROVED BY
	A. FAGNILLI	F. GILMORE
DESIGNED BY	ISSUED BY	DATE
DRAWN BY	AIRWAY FACILITIES SERVICE	
CHECKED BY	DRAWING NO. D-6213-13	REV. LTR.

REV. LTR.	DATE	DESCRIPTION	CHECKED	APPROVED

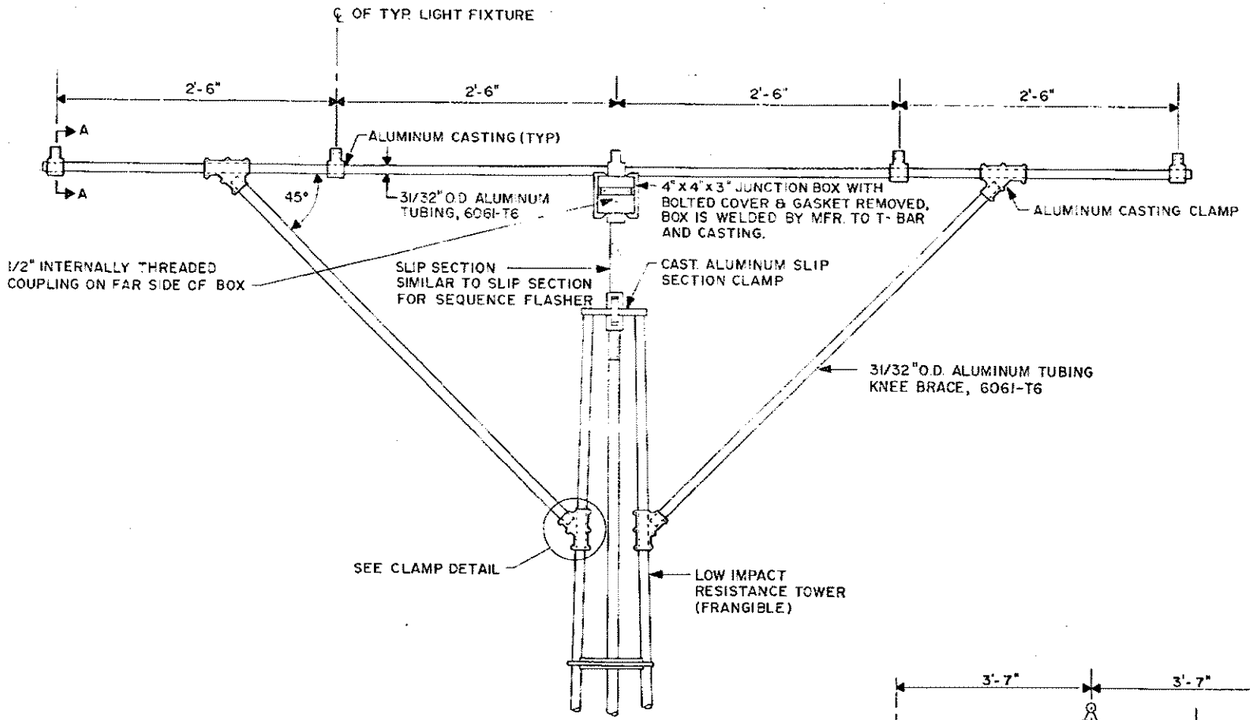

5 - LIGHT T-BAR
(CROSS BAR)

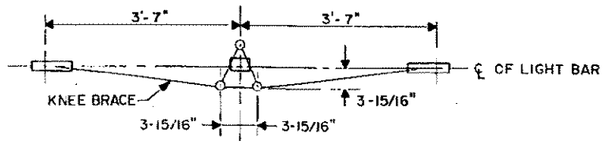

PLAN VIEW OF KNEE BRACES
SHOWING BUILT-IN RESISTANCE TO TWISTING

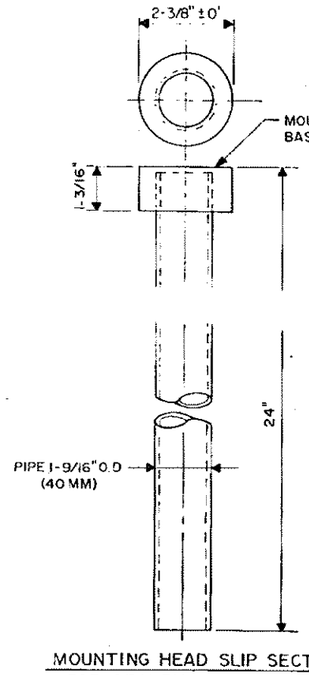

MOUNTING HEAD SLIP SECTION
FOR SEQUENCED FLASHER

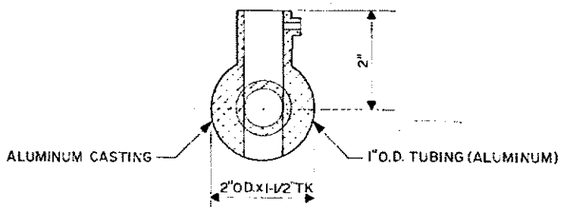

SECTION "A - A"

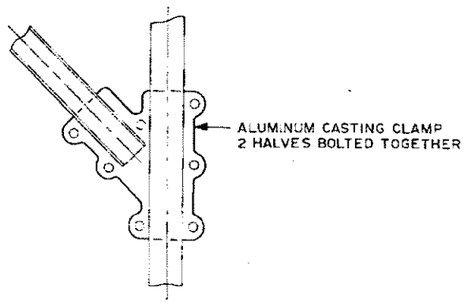

CLAMP DETAIL

REV LTR	DATE	DESCRIPTION	CHECKED	APPROVED

DEPARTMENT OF TRANSPORTATION
FEDERAL AVIATION ADMINISTRATION
WASHINGTON, D.C. 20591

MALSR W/THRESHOLD LIGHTS AND LOW IMPACT RESISTANT STRUCTURE 6'-0" TO 40'-0" MOUNTING HEIGHT FRANGIBLE T-BAR AND RAIL FLASHER MOUNTING HEAD

REVIEWED BY	SUBMITTED BY	APPROVED BY
	A. PROVENCH	F. GILMORE

DESIGNED BY
DRAWN BY
CHECKED BY

ISSUED BY
AIRWAY FACILITIES SERVICE

DATE —

DRAWING NO
D-6213-14

REV LTR

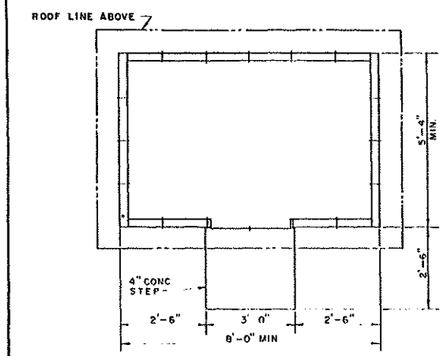

PLAN
SCALE: $\frac{1}{2}$ = 1'-0"

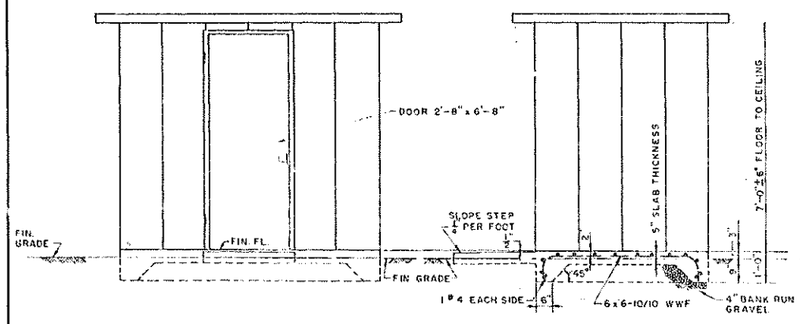

FRONT ELEVATION
SCALE: $\frac{1}{2}$ = 1'-0"

SIDE ELEVATION
SCALE: $\frac{1}{2}$ = 1'-0"

GENERAL NOTES

PREFABRICATED METAL BUILDING

DESCRIPTION – BUILDING SHALL BE PRE-ENGINEERED, SELF-FRAMING TYPE WITH PANELS PROVIDING STRUCTURAL SUPPORT AND COVER IN ONE UNIT, FURNISHED WITH ALL ITEMS INCIDENTAL TO ERECTION. THE STORAGE SHED SHALL CONFORM TO THE SPACE REQUIREMENTS ON THIS DRAWING; HOWEVER THE CONTRACOR MAY SUBSTITUTE A SUITABLE COMMERCIAL PRODUCT OF MINIMUM 20 GAUGE GALV. SHEET STEEL, EQUIVALENT STORAGE CAPACITY, & 6'-6" MINIMUM HEIGHT, ERECTED ON CONCRETE FLOOR IN ACCORDANCE WITH MANUFACTURER'S INSTRUCTION

REV LTR	DATE	DESCRIPTION	CHECKED	APP'D

DEPARTMENT OF TRANSPORTATION
FEDERAL AVIATION ADMINISTRATION
SOUTHWEST REGION — FORT WORTH, TEXAS

MALS
STORAGE BUILDING
PLAN AND ELEVATIONS

REVIEWED BY	SUBMITTED BY	APPROVED BY
	FF ELECTRO/MECH SECT SW-435	CHIEF, ENGINEERING BRANCH
DES. INIT. BY	ISSUED BY	DATE 26 JANUARY 1970
DRAWN BY EMV	AIRWAY FACILITIES DIVISION	DRAWING NO. SW-C-7450
CHECKED BY		

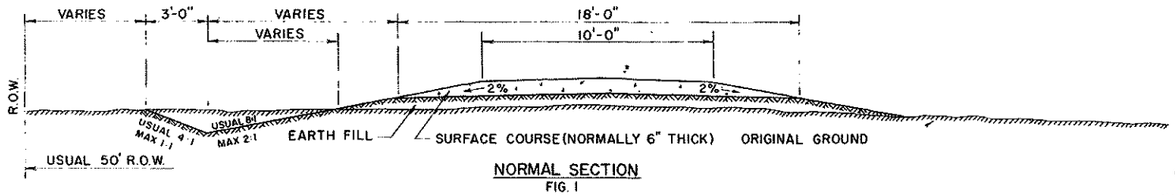

NORMAL SECTION
FIG. 1

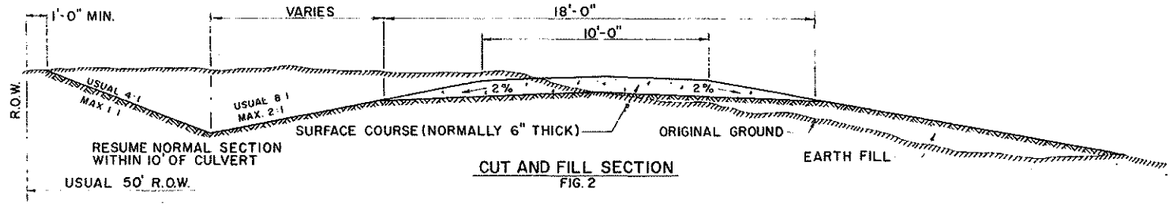

CUT AND FILL SECTION
FIG. 2

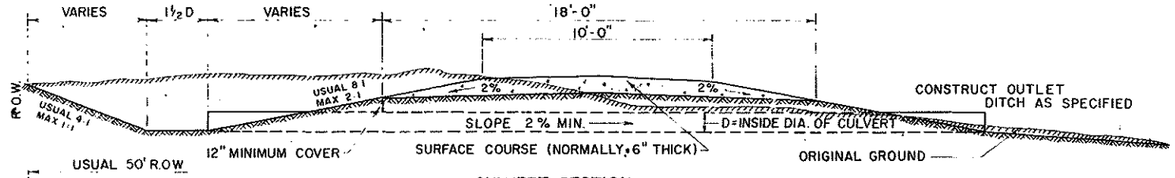

CULVERT SECTION
FIG. 3

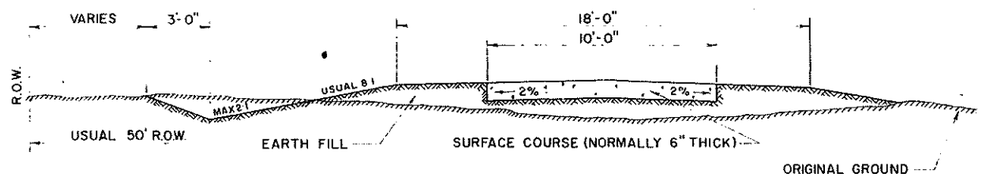

FILL SECTION
FIG. 4
ALTERNATE

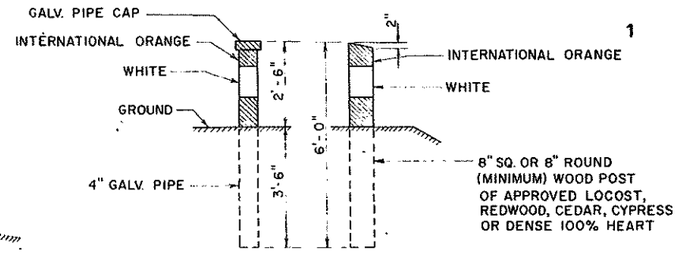

PIPE AND WOOD GUARD POSTS
FIG. 5

NOTES:

1. THE FIELD ENGINEER AT TIME OF SITE SELECTION AND SURVEY SHOULD MAKE RECOMMENDATION AS TO TYPE OF DRIVEWAY BEST SUITED FOR THE SITE.
2. LOCAL CONDITIONS MAY MODIFY THE TYPICAL SECTIONS SHOWN HEREON. SEE PLOT LAYOUT DRAWING FOR DETAILS OF DRIVEWAY TO BE CONSTRUCTED.
3. SEE PLOT LAYOUT DRAWING FOR DETAILS OF BOX CULVERTS, BRIDGES, OR OTHER STRUCTURES REQUIRED.
4. SURFACE COURSES SHALL BE GRAVEL, STONE OR OTHER ACCEPTABLE LOCAL MATERIAL COMPACTED BY TRAFFIC TO THE THICKNESS ORDERED BY THE GOVT'S REPRESENTATIVES. SURFACE MATERIAL SHALL CONFORM TO SPEC. FW-603
5. GUARD POSTS OF TYPES SPECIFIED SHALL BE INSTALLED AT LOCATIONS SHOWN OR WHERE ORDERED.
6. VARY DEPTHS OF DITCH TO PROVIDE NECESSARY FILL.
7. DRIVEWAY TO CONFORM TO SPECIFICATION CAA-95b.

NO	REVISION	ENG	DFT	DATE	CHK'D
1	REDRAWN - NO CHANGES	KRH		2-26-64	

FEDERAL AVIATION AGENCY
SOUTHWEST REGION — FORT WORTH, TEXAS

DRIVEWAY CROSS SECTIONS (TYPICAL)

APPROVED: [illegible]
SUBMITTED: [illegible]

CK'D	DR. BY:	TR. BY:	SW.D- 2089
DESIGN		DATE: 1-16-59	CONSTRUCTION

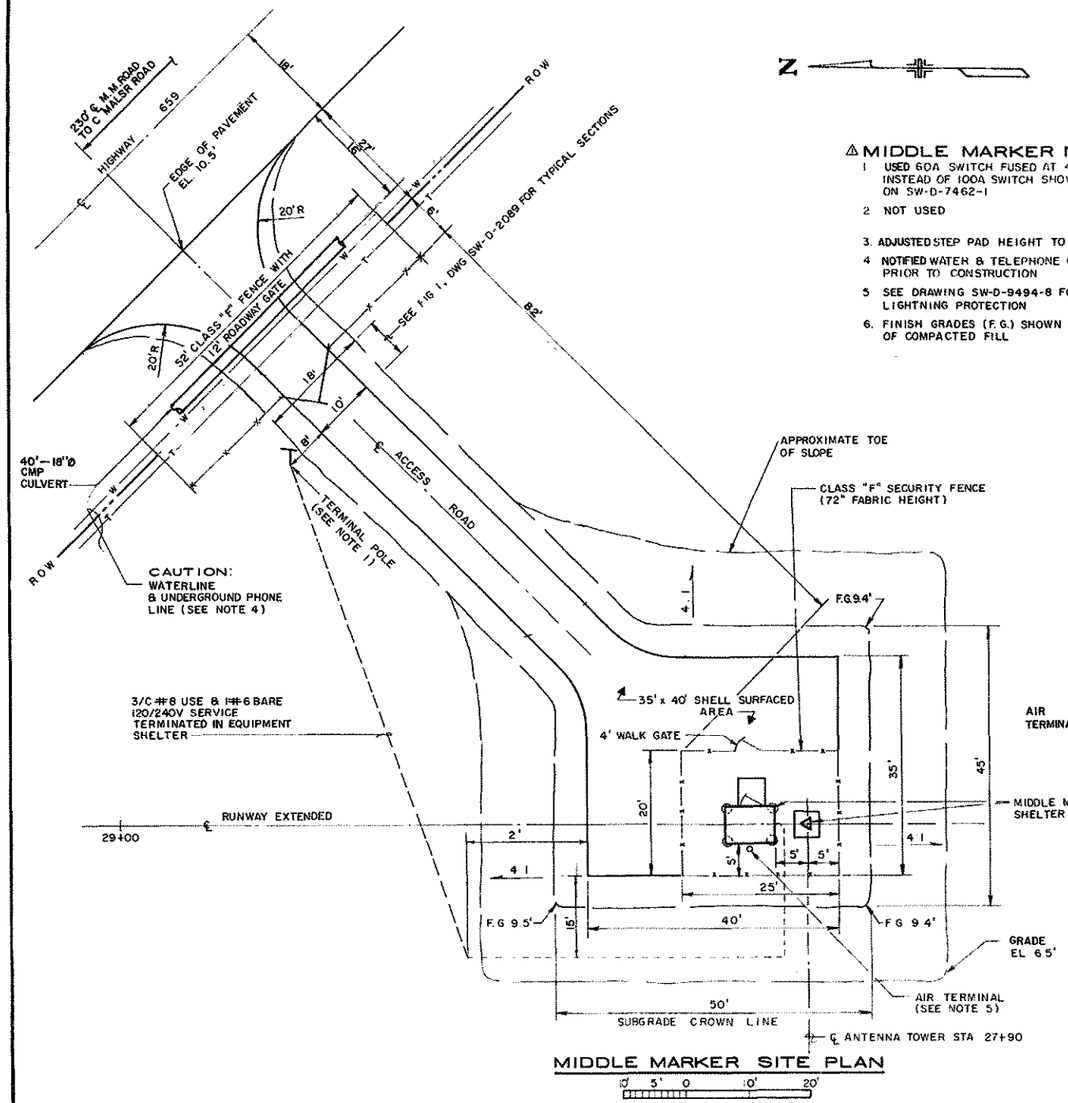

MIDDLE MARKER SITE PLAN

10' 5' 0 10' 20'

△ MIDDLE MARKER NOTES:

1. USED 60A SWITCH FUSED AT 40A INSTEAD OF 100A SWITCH SHOWN ON SW-D-7462-1
2. NOT USED
3. ADJUSTED STEP PAD HEIGHT TO FIT GRADE
4. NOTIFIED WATER & TELEPHONE COMPANIES PRIOR TO CONSTRUCTION
5. SEE DRAWING SW-D-9494-8 FOR UP GRADE LIGHTNING PROTECTION
6. FINISH GRADES (F.G.) SHOWN ARE GRADE OF COMPACTED FILL

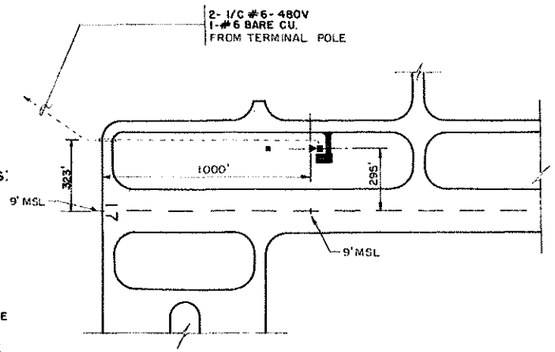

GLIDE SLOPE LOCATION PLAN

300' 0 300' 600'

GLIDE SLOPE SITE INFORMATION

LATITUDE 29° 34' 19.21"
LONGITUDE 90° 39' 33.33"
TCH 52' MSL
GLIDE SLOPE ANGLE 3°
EQUIPMENT. WILCOX MK-1F, D-6191 SERIES OF DRAWINGS

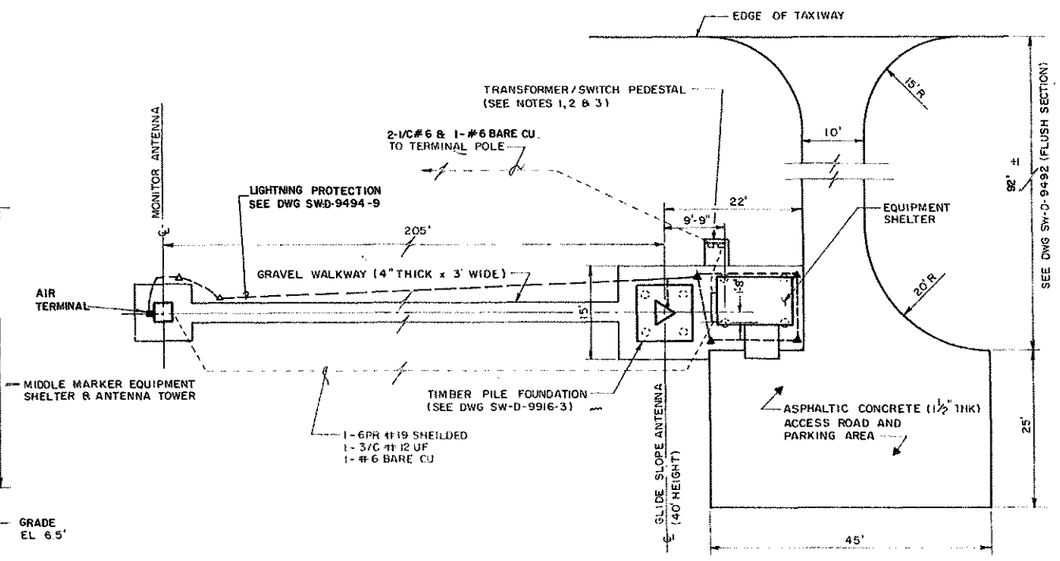

GLIDE SLOPE SITE

10' 5' 0 10' 20'

ADD LIGHTNING PROTECTION

GLIDE SLOPE NOTES:

1. SEE DRAWING SW-D-9494-9 FOR UP GRADE LIGHTNING PROTECTION.

△ MIDDLE MARKER SITE INFORMATION:

LATITUDE 29° 34' 56.75"
LONGITUDE 90° 39' 35.27"
DECISION HEIGHT 199' (208 MSL)
EQUIPMENT TYPE WILCOX MKI-F, D-6191 SERIES DRAWINGS

REV	DATE	DESCRIPTION	DRWN	CHECKED
5	9-18-85	MIDDLE MARKER AS-BUILT (PER DJC DATED 12-9-83)	LTS,INC	J.L.L
4	9-18-85	GLIDE SLOPE LIGHTNING PROTECTION AS-BUILT (PER DJC, DATED 12-9-83)	LTS,INC	J.L.L
3	9-18-85	GLIDE SLOPE AS-BUILT (PER 12-8-82)	LTS,INC	J.L.L
2	5-11-83	REVISED MIDDLE MARKER SITE	Pdm	SBM
1	12-10-82	REVISED MIDDLE MARKER SITE AND ADD G.S. LIGHTNING PROTECTION	JLL	SBM

DEPARTMENT OF TRANSPORTATION
FEDERAL AVIATION ADMINISTRATION
SOUTHWEST REGION FORT WORTH, TEXAS

INSTRUMENT LANDING SYSTEM
RUNWAY 17

GLIDE SLOPE & MIDDLE MARKER
SITE PLANS

HOUMA (Houma-Terrebonne Airport) LOUISIANA

SUBMITTED: [signature] APPROVED: [signature]
CHIEF OF SECTION, ASW-441 CHIEF OF SECTION, ASW-440
DESIGNED: SBM DRAWN: Pdm CHECKED:
INSPECTOR: AIRWAY FACILITIES DIVISION
DATE: MARCH 23, 1982
DRAWING NO. SW-D-9916-2

SW FORM 6005-14 (10-80)