Department of Transportation
Federal Aviation Administration

MALSR Replacement Runway 18
Houma-Terrebonne Airport
Houma, Louisiana

[redacted]

ISSUED FOR BID SUBMISSION
JULY 16, 2025

FOR OFFICIAL USE ONLY
PUBLIC AVAILABILITY TO BE DETERMINED UNDER 5 USC 552

JACOBS
1100 N GLEBE RD.
SUITE 500
ARLINGTON, VA 22201

REV.	APPROVED DATE	DESCRIPTION	JCN	REDLINE DATE	APVD

COMMONWEALTH OF PENNSYLVANIA
REGISTERED PROFESSIONAL
CHRISTOPHER STEVEN WULFF
ENGINEER
No. PE078766
7/16/25

Jacobs

HOUMA-TERRABONNE AIRPORT
HOUMA, LOUISIANA

DEPARTMENT OF TRANSPORTATION
FEDERAL AVIATION ADMINISTRATION
CENTRAL SERVICE AREA — FORTH WORTH, TX

MALSR
REPLACEMENT RUNWAY 18

COVER SHEET

HOUMA — HOUMA-TERREBONNE AIRPORT — LA

REVIEWED BY	SUBMITTED BY	APPROVED BY
	SUBMITTER'S TITLE	APPROVER'S TITLE
	DESIGNED BY W. KING	ISSUED BY: ENGINEERING SERVICES NAVAIDS
	DRAWN BY W. KING	DATE 07-16-25 JCN: 22001835
	CHECKED BY C. WULFF	DRAWING NO. HUM-D-MALSR-G-001 REV.

ABBREVIATIONS

ABBREVIATIONS:

AC	ADVISORY CIRCULAR
AOA	AIR OPERATIONS AREA
APPROX	APPROXIMATELY
ASTM	ASTM INTERNATIONAL
BLVD	BOULEVARD
C/L,C	CENTERLINE
CI	CAST IRON
CLR	CLEAR, CLEARANCE
CMP	CORRUGATED METAL PIPE
DEG	DEGREE
DIA, Ø	DIAMETER
DME	DISTANCE-MEASURING EQUIPMENT
DOTD	DEPARTMENT OF TRANSPORTATION AND DEVELOPMENT
E	EAST / EASTING
E&S	EROSION AND SEDIMENTATION
ELEV	ELEVATION
EQUIP	EQUIPMENT
FAA	FEDERAL AVIATION ADMINISTRATION
FOD	FOREIGN OBJECT DEBRIS
FT	FOOT, FEET
GFE	GOVERNMENT FURNISHED EQUIPMENT
GRS	RIGID GALVANIZED STEEL
HDPE	HIGH DENSITY POLYETHYLENE
HUM	HOUMA-TERREBOONE AIRPORT
ILS	INSTRUMENT LANDING SYSTEM
IN	INCH
L	LEFT, LONGITUDE
LA	LOUISIANA
LIR	LOW-IMPACT RESISTANT
LF	LINEAR FEET
LOD	LIMIT OF DISTURBANCE
MAX	MAXIMUM
MALSR	MEDIUM INTENSITY APPROACH LIGHTING SYSTEM WITH RAIL
MIN	MINIMUM
MSL	MEAN SEA LEVEL
N	NORTH/ NORTHING
NAD 83	NORTH AMERICAN DATUM OF 1983
NAVD 88	NORTH AMERICAN VERTICAL DATUM OF 1988
NEMA	NATIONAL ELECTRICAL MANUFACTURERS ASSOCIATION
NGA	NATIONAL GEOSPATIAL - INTELLIGENCE AGENCY
NGS	NATIONAL GEODETIC SURVEY
NOTAM	NOTICE TO AIRMEN
NPDES	NATIONAL POLLUTANT DISCHARGE ELIMINATION SYSTEM
NTS	NOT TO SCALE
O.C.	ON CENTER
OFF	OFFSET
P/C	POWER AND CONTROL
PC	POINT OF CURVATURE
PCC	PORTLAND CEMENT CONCRETE
PI	POINT OF INTERSECTION
PVC	POLYVINYL CHLORIDE
PRC	POINT OF REVERSE CURVE
PT	POINT OF TANGENCY
PVI	POINT OF VERTICAL INTERSECTION
R	RIGHT, RADIUS
RAIL	RUNWAY ALIGNMENT INDICATOR LIGHTS
RCP	REINFORCED CONCRETE PIPE
RGS	RIGID GALVANIZED STEEL (SAME AS GRS)
RPR	RESIDENT PROJECT REPRESENTATIVE
RLCZ	RUNWAY LATERAL CLEARANCE ZONE
R/W, RW, RWY	RUNWAY
SF	SILT FENCE
STA	STATION
TPCG	TERREBONNE PARISH CONSOLIDATED GOVERNMENT
TOF	TOP OF FOUNDATION
T/W, TW, TWY	TAXIWAY
TYP	TYPICAL
U.L.	UNDERWRITERS LABORATORY
WWF	WELDED WIRE FABRIC
#	NUMBER

GENERAL NOTES

1. CONTRACTOR SHALL CONSTRUCT THE PROJECT IN ACCORDANCE WITH THE PROJECT PLANS AND SPECIFICATIONS.
2. THIS PROJECT IS SUBJECT TO INSPECTION BY AUTHORIZED REPRESENTATIVES OF THE AIRPORT, FAA, LA DEQ. THE CONTRACTOR SHALL PROVIDE CONTROLLED ACCESS FOR INSPECTION PURPOSES TO AUTHORIZED REPRESENTATIVES AT ALL TIMES. AUTHORIZED REPRESENTATIVES WILL DISPLAY PROPER CREDENTIALS WHEN ACCESSING AND WHILE ON SITE.
3. COORDINATE ALL CONSTRUCTION ACTIVITIES WITH THE RESIDENT PROJECT REPRESENTATIVE (RPR). THE RPR WILL ASSIST THE CONTRACTOR IN COORDINATION OF THE WORK WITH THE AIRPORT, THE FAA, AND THE AIR TRAFFIC CONTROL TOWER (ATCT). EXCEPT FOR EMERGENCIES ALL COORDINATION WITH THESE ENTITIES SHALL BE MADE THROUGH THE RPR.
4. IN THE EVENT OF AN EMERGENCY THE CONTRACTOR SHALL CALL 911.

SAFETY AND SECURITY

1. THE CONTRACTOR SHALL OBTAIN AND HAVE KNOWLEDGE OF, AND INCORPORATE THE FOLLOWING SAFETY PROVISIONS INTO THE CONSTRUCTION PROJECT:
   - 1.1. FAA AC 150/5370-2G, OPERATIONAL SAFETY ON AIRPORTS DURING CONSTRUCTION
   - 1.2. FAA AC 150/5200-18C, AIRPORT SAFETY SELF-INSPECTION
   - 1.3. FAA AC 150/5210-5D, PARKING, MARKING, AND LIGHTING OF VEHICLES USED ON AIRPORT
2. THE CONTRACTOR SHALL MAINTAIN RADIO COMMUNICATION WITH AIR TRAFFIC CONTROL TOWER AT ALL TIMES DURING CONSTRUCTION AND SHALL ASSIGN RESPONSIBLE PERSONNEL TO CONTINUOUSLY MONITOR THE GROUND CONTROL FREQUENCY (125.3 MHz). THE CONTRACTOR SHALL PROVIDE AT LEAST 1 RADIO AT EACH WORK AREA.
3. NOTICE TO AIRMEN (NOTAM) - THE CONTRACTOR SHALL PROVIDE THE NECESSARY INFORMATION ON CONSTRUCTION CONDITIONS TO THE RPR IN ORDER FOR NOTAMS TO BE ISSUED IN ACCORDANCE WITH ESTABLISHED CRITERIA. THE RPR SHALL BE NOTIFIED OF ANY ACTIVITY REQUIRING A NOTAM AT LEAST 48 HOURS IN ADVANCE.
4. ALL CONSTRUCTION TRAFFIC SHALL ENTER AND EXIT THE PROJECT AREA THROUGH THE PROJECT ACCESS GATE AND UTILIZE THE HAUL ROUTES SHOWN ON THE PLANS. THE CONTRACTOR WILL BE RESPONSIBLE FOR SECURITY OF ALL GATES. IT IS THE RESPONSIBILITY OF THE CONTRACTOR TO COORDINATE THE USE OF ALL PUBLIC ROADWAYS TO TRAVEL BETWEEN WORK AREAS.
5. AREAS OUTSIDE THE PROJECT LIMITS ARE DESIGNATED AS RESTRICTED AREAS. THE CONTRACTOR'S PERSONNEL AND EQUIPMENT ARE PROHIBITED FROM ENTERING THESE AREAS AT ANY TIME UNLESS SPECIFICALLY AUTHORIZED IN WRITING BY THE RPR.
6. ALL VEHICLES USED ON THE AIRFIELD SHALL MEET THE AIRPORT AND FAA REQUIREMENTS FOR MARKING AND LIGHTING IN ACCORDANCE WITH NOTE 1.
7. THE CONTRACTOR SHALL BE RESPONSIBLE FOR STAKING LOCATIONS AND GRADE CONTROL OF ALL ELEMENTS OF THE PROJECT.
8. ALL CONSTRUCTION DEBRIS AND WASTE SHALL BE DEPOSED OF BY THE CONTRACTOR ON A CONTINUOUS BASIS TO PREVENT WIND BLOWN DEBRIS FROM EXITING THE ACTIVE PROJECT AREA. THE BURNING OF DEBRIS WILL NOT BE PERMITTED ON AIRPORT PROPERTY

EXISTING CONDITIONS/ UTILITIES

1. THE EXISTING CONDITIONS AND UTILITIES SHOWN ON THE PLANS ARE BASED ON A COMBINATION OF SURVEY, AERIAL IMAGERY, GPR UTILITY LOCATION, AND RESPONSES TO THE DESIGN ONE-CALL. IN THE EVENT THE EXISTING CONDITIONS SIGNIFICANTLY DIFFER THAN THOSE DEPICTED IN THESE PLANS THE CONTRACTOR SHALL NOTIFY THE RPR IMMEDIATELY. THE CONTRACTOR SHALL BE RESPONSIBLE FOR THE LOCATION, DEPTH, AND IDENTIFICATION OF ALL EXISTING UTILITIES IN THE CONSTRUCTION AREA, WITH THE EXCEPTION OF THE FAA CABLES. AERIAL IMAGERY SOURCED FROM BING MAPS.
2. WHERE KNOWN THE SIZE, OWNER, AND TYPE OF UTILITY HAS BEEN PROVIDED ON THE CD SERIES OF DRAWINGS. THE CONTRACTOR SHALL CONFIRM DEPTH, SIZE, TYPE, AND OWNERSHIP PRIOR TO CONSTRUCTION.
3. FAA CABLES WILL BE LOCATED AND MARKED BY THE FAA PRIOR TO CONSTRUCTION. THE CONTRACTOR IS TO NOTIFY THE RPR 45 CALENDAR DAYS IN ADVANCE OF CONSTRUCTION TO ALLOW FOR ADEQUATE TIME FOR FAA TO COMPLETE THIS TASK.
4. THE CONTRACTOR SHALL PROTECT EXISTING AIRFIELD INFRASTRUCTURE INCLUDING PAVED AREAS, RUNWAY AND TAXIWAY LIGHTING SYSTEMS, MARKINGS, ETC.
5. ANY DAMAGE TO AIRPORT INFRASTRUCTURE, UTILITIES, FAA CABLES SHALL BE IMMEDIATELY REPORTED TO THE RPR AND SHALL BE REPAIRED IMMEDIATELY AND CONTINUOUSLY TO THE SATISFACTION OF THE RPR AND THE OWNER AT NO ADDITIONAL CONTRACT TIME OR COST TO THE OWNER. THE FAA MAY REQUIRE DAMAGED CABLES TO BE REPLACED BETWEEN TERMINATION POINTS.

GENERAL LEGEND

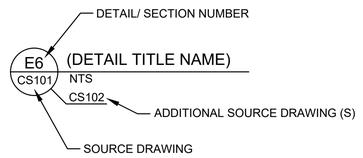

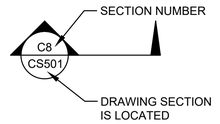

SECTION CALL OUT

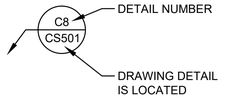

DETAIL CALL OUT

EXISTING CONDITIONS LEGEND

E E	UNDERGROUND ELECTRICAL CONDUIT/ DUCT BANK
OH/E	OVERHEAD ELECTRICAL CABLES
COM	UNDERGROUND COMMUNICATION CONDUIT/ DUCT BANK
NG NG	NATURAL GAS LINE
SAN	SANITARY SEWER LINE
ST	STORM PIPE
W W	WATERLINE
X X	FENCE
RSA	RUNWAY SAFETY AREA
ROFA	RUNWAY OBJECT FREE AREA
TSA	TAXIWAY SAFETY AREA
TOFA	TAXIWAY OBJECT FREE AREA
[E]	ELECTRICAL HANDHOLE
[J] [J]	ELECTRICAL JUNCTION STRUCTURE
Ø	UTILITY POLE
	TAXIWAY EDGE LIGHT (ELEVATED)
	RUNWAY END LIGHT (ELEVATEED)

INDEX OF DRAWINGS

REV LTR	DRAWING NUMBER	DRAWING TITLE
	GENERAL	
	G-001	COVER SHEET
	G-002	INDEX OF DRAWINGS, GENERAL NOTES, ABBREVIATIONS, AND LEGEND
	G-101	CONSTRUCTION ACCESS AND PROJECT LAYOUT PLAN
	G-201	PHASING PLAN
	G-300	MALSR PLAN AND PROFILE OVERALL
	CIVIL	
	CD101 - CD103	CIVIL DEMOLITION PLAN
	CS101 - CS103	CIVIL SITE PLAN
	CS401	CIVIL SITE PLAN ENLARGED VIEWS
	CS501	TYPICAL LIGHT STATION LAYOUTS AND PAVEMENT SECTIONS
	CS502	FENCING DETAILS
	CG101 - CG104	GRADING AND DRAINAGE PLAN
	CG201	MALSR STA 2 THRU 18 ACCESS ROADWAY PROFILE
	CG202	MALSR STA 22 AND 24 ACCESS ROAD AND MALSR SHELTER ACCESS ROADWAY PROFILES
	CG501	DRAINAGE DETAILS
	ELECTRICAL	
	ED101 - ED104	ELECTRICAL DEMOLITION PLAN
	ES101 - ES104	ELECTRICAL SITE PLAN
	ES401 - ES402	ELECTRICAL SITE PLAN ENLARGED VIEWS
	ES501	MALSR GENERAL INFRASTRUCTURE DETAILS 1
	ES502	MALSR GENERAL INFRASTRUCTURE DETAILS 2
	ES503	FAA CONDUIT DETAILS
	ES504	MALSR THRESHOLD BAR DETAILS
	ES505	MALSR EMT LIGHT STATION DETAILS
	ES506	MALSR MG-20 LIGHT STATION DETAILS 1
	ES507	MALSR MG-20 LIGHT STATION DETAILS 2
	ES508	MALSR MG-20 LIGHT STATION DETAILS 3
	ES509	HIGH VOLTAGE RAIL LIGHT STATION DETAILS
	ES510	MALS STEADY-BURN WIRING DETAILS
	ES511	MALSR DISTRIBUTION PANEL DETAILS
	ES512	MALSR FACILITY GROUND RESISTANCE TESTING REQUIREMENT DETAILS
	ES513	MALSR SHELTER LIGHTNING PROTECTION DETAILS
	ES514	MALSR SHELTER SERVICE EQUIPMENT RACK DETAILS
	ES515	MALSR GROUNDING CONNECTION DETAILS
	ES521	10' X 16' LEFT HAND CONFIGURATION MALSR SHELTER INTERIOR DETAILS
	ES522	10' X 16' LEFT HAND CONFIGURATION MALSR SHELTER EXTERIOR DETAILS
	ES523	10' X 16' LEFT HAND CONFIGURATION MALSR SHELTER DUPONT DRAWING 1 OF 3
	ES524	10' X 16' LEFT HAND CONFIGURATION MALSR SHELTER DUPONT DRAWING 2 OF 3
	ES525	10' X 16' LEFT HAND CONFIGURATION MALSR SHELTER DUPONT DRAWING 3 OF 3
	ES601	MALSR SHELTER POWER DISTRIBUTION WIRING DIAGRAM
	ES602	MALSR CONTROL CABINET FA-21000 WIRING DIAGRAM
	ES603	MALS FIELD DISTRIBUTION RACK WIRING DIAGRAM
	ES604	RAIL HIGH VOLTAGE ICC WIRING DIAGRAM
	STRUCTURAL	
	S-001	STRUCTURAL GENERAL NOTES AND ABBREVIATIONS
	S-101	MALSR SHELTER AND SERVICE EQUIPMENT RACK FOUNDATION STRUCTURAL PLAN
	S-102	STRUCTURAL MALSR FOUNDATION PLANS
	S-501 - S-502	STRUCTURAL SECTIONS AND DETAILS

FOR OFFICIAL USE ONLY
PUBLIC AVAILABILITY TO BE DETERMINED UNDER 5 USC 552

COMMONWEALTH OF PENNSYLVANIA — REGISTERED PROFESSIONAL ENGINEER — CHRISTOPHER STEVEN WULFF — No. PE078766
7/16/25

JACOBS
1100 N GLEBE RD.
SUITE 500
ARLINGTON, VA 22201

REV.	APPROVED DATE	DESCRIPTION	JCN	REDLINE DATE	APVD

Jacobs

DEPARTMENT OF TRANSPORTATION
FEDERAL AVIATION ADMINISTRATION
CENTRAL SERVICE AREA — FORTH WORTH, TX

MALSR
REPLACEMENT RUNWAY 18

INDEX OF DRAWINGS, GENERAL NOTES, ABBREVIATIONS, AND LEGEND

HOUMA — HOUMA-TERREBONNE AIRPORT — LA

REVIEWED BY	SUBMITTED BY	APPROVED BY
	SUBMITTER'S TITLE	APPROVER'S TITLE
DESIGNED BY W. KING	ISSUED BY	DATE 07-16-25 JCN: 22001835
DRAWN BY W. KING	ENGINEERING SERVICES NAVAIDS	DRAWING NO. HUM-D-MALSR-G-002 REV.
CHECKED BY C. WULFF		

HOUMA-TERRABONNE AIRPORT
HOUMA, LOUISIANA

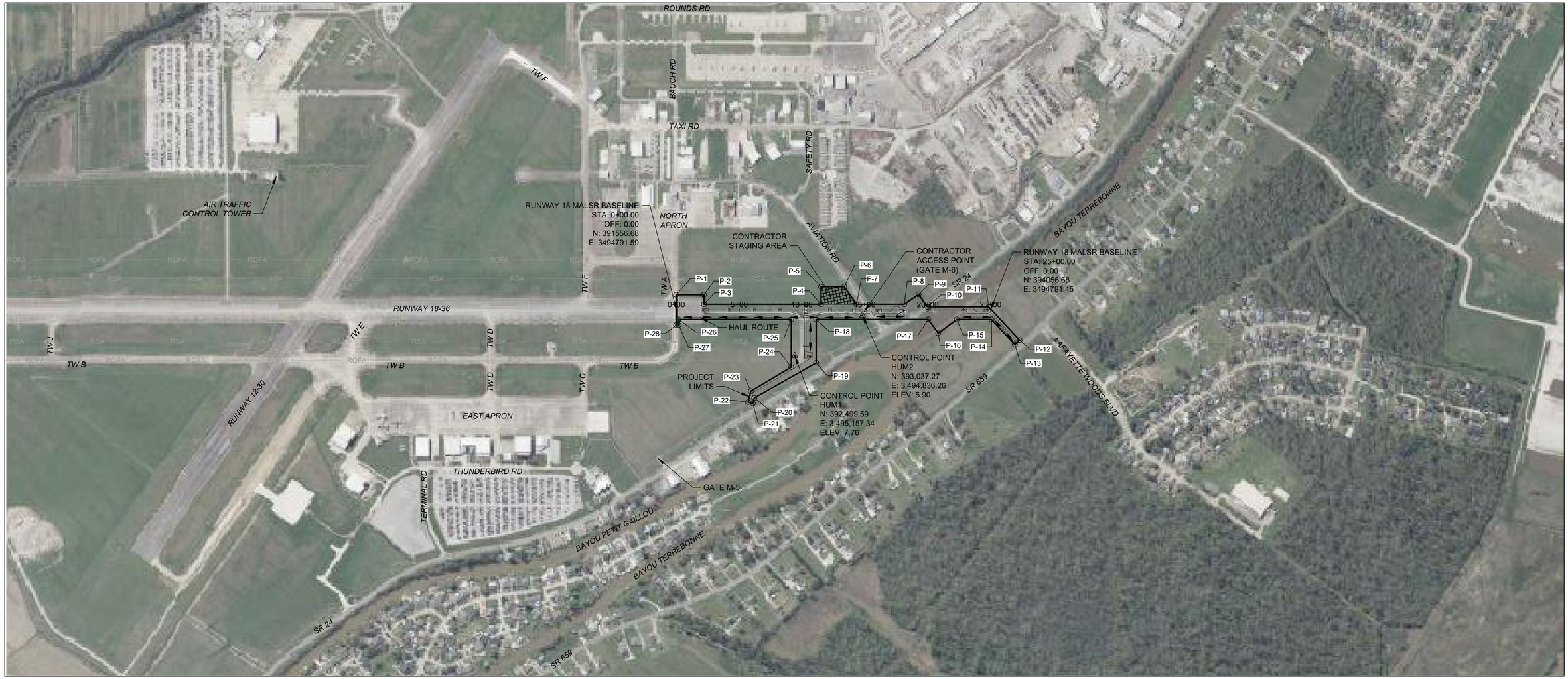

STAGING AREA/ HAUL ROUTE NOTES

1. THE CONTRACTOR'S STAGING AREA AND HAUL ROUTES SHALL BE AS SHOWN ON THE PLANS.
2. ALL EXISTING GRASSED AREAS WHICH ARE DISTURBED SHALL BE RESTORED TO THEIR ORIGINAL CONDITION OR BETTER AT THE COMPLETION OF THE PROJECT AT NO ADDITIONAL COST TO THE OWNER.
3. THE CONTRACTOR WILL NOT BE PERMITTED TO UTILIZE ANY TAXIWAY OR RUNWAY AS A HAUL ROUTE AT ANY TIME.
4. ALL TAXIWAYS AND RUNWAYS SHALL BE KEPT FREE OF FOD (DEBRIS, DIRT, ETC.) AT ALL TIMES. ANY MATERIAL FOUND ON ANY TAXIWAY OR RUNWAY SHALL BE IMMEDIATELY CLEANED UP TO THE SATISFACTION OF THE RPR AND CORRECTIVE ACTIONS SHALL BE TAKEN TO PREVENT FUTURE FOD FROM BEING DEPOSITED ON THE TAXIWAY OR RUNWAY PAVEMENTS.
5. THE CONTRACTOR SHALL HAVE A POWER SWEEPER, BLOWER, OR OTHER APPROVED EQUIPMENT TO MAINTAIN THE CONSTRUCTION AREA AS WELL AS THE AREAS ADJACENT TO THE CONSTRUCTION AREA.
6. DUST GENERATED DUE TO CONSTRUCTION ACTIVITIES SHALL BE ADEQUATELY CONTROLLED AT ALL TIMES.
7. ALL EQUIPMENT MUST BE RETURNED TO THE STAGING AREA AT THE COMPLETION OF THE WORK DAY AND REMAIN IN THE STAGING AREA UNTIL NEEDED FOR CONSTRUCTION.
8. THE CONTRACTOR IS RESPONSIBLE FOR COORDINATING AND PROVIDING ALL PERMANENT AND TEMPORARY CONNECTIONS TO THE STAGING AREA AT NO ADDITIONAL COST TO THE OWNER.
9. THE CONTRACTOR IS RESPONSIBLE TO COORDINATE ALL PUBLIC ROADWAYS THAT ARE UTILIZED TO ACCESS THE CONSTRUCTION AREA WITH THE LA DOTD AND OBTAIN ALL NECESSARY PERMITS TO DO SO.

SURVEY CONTROL NOTES

1. THE SURVEY CONTROL POINTS ARE AVERAGED OPUS SOLUTIONS THAT ESTABLISH THE CONNECTION TO THE NATIONAL SPATIAL REFERENCE SYSTEM ON THE NAD 83/2011 EPOCH 2010.00 REFERENCE FRAME.
2. THE VERTICAL DATUM IS NAVD88 AND ORTHOMETRIC HEIGHTS ARE DERIVED FROM APPLYING THE GEOD18 TO THE NAD83 ELLIPSOID HEIGHTS.
3. THE NAD83 LATITUDE AND LONGITUDE IS PROJECTED ON THE LOUISIANA SOUTH ZONE STATE PLANE COORDINATE SYSTEM TO PRODUCE NORTHINGS AND EASTINGS.
4. ALL UNITS ARE US SURVEY FEET UNLESS OTHERWISE NOTED.
5. SEE CS100 SERIES FOR ROADWAY ALIGNMENT INFORMATION.

TEMPORARY MARKINGS BARRICADES, AND TRAFFIC CONTROL FOR ROADWAYS

1. ALL TRAFFIC CONTROL REQUIRED FOR PUBLIC ROADWAYS, SUCH AS: AVIATION ROAD, ROUTE 24, OR ROUTE 659 SHALL BE PERFORMED IN ACCORDANCE WITH LA DOTD STANDARD DRAWINGS. THE CONTRACTOR SHALL PROVIDE ALL NECESSARY TRAFFIC CONTROL DEVICES.

PROJECT LIMIT POINT TABLE		
POINT NO.	NORTHING	EASTING
P-1	391555.2	3494671.4
P-2	391776.8	3494671.4
P-3	391776.8	3494746.6
P-4	392708.2	3494746.5
P-5	392708.2	3494607.1
P-6	392892.6	3494607.1
P-7	392990.7	3494746.5
P-8	393369.7	3494746.5
P-9	393483.9	3494668.7
P-10	393554.0	3494766.5
P-11	394041.9	3494766.5
P-12	394287.9	3495031.9
P-13	394250.1	3495067.6
P-14	394063.7	3494866.5

PROJECT LIMIT POINT TABLE		
POINT NO.	NORTHING	EASTING
P-15	393788.4	3494866.5
P-16	393640.6	3494977.4
P-17	393561.2	3494866.5
P-18	392669.2	3494866.5
P-19	392669.2	3495213.2
P-20	392177.0	3495491.1
P-21	392166.0	3495535.2
P-22	392127.2	3495525.6
P-23	392149.0	3495437.6
P-24	392471.6	3495246.1
P-25	392471.5	3494866.5
P-26	391575.2	3494866.6
P-27	391575.2	3494911.6
P-28	391555.2	3494911.6

N

0 200 400 800

SCALE: 1 INCH = 400 FEET

FOR OFFICIAL USE ONLY
PUBLIC AVAILABILITY TO BE DETERMINED UNDER 5 USC 552

COMMONWEALTH OF PENNSYLVANIA — REGISTERED PROFESSIONAL — CHRISTOPHER STEVEN WULFF — ENGINEER — No. PE076766
7/16/25

JACOBS
1100 N GLEBE RD.
SUITE 500
ARLINGTON, VA 22201

REV.	APPROVED DATE	DESCRIPTION	JCN	REDLINE DATE	APVD

Jacobs

DEPARTMENT OF TRANSPORTATION
FEDERAL AVIATION ADMINISTRATION
CENTRAL SERVICE AREA — FORTH WORTH, TX

MALSR REPLACEMENT RUNWAY 18

CONSTRUCTION ACCESS AND PROJECT LAYOUT PLAN

HOUMA — HOUMA-TERREBONNE AIRPORT — LA

HOUMA-TERRABONNE AIRPORT
HOUMA, LOUISIANA

REVIEWED BY	SUBMITTED BY	APPROVED BY
	SUBMITTER'S TITLE	APPROVER'S TITLE
DESIGNED BY W. KING	ISSUED BY: ENGINEERING SERVICES NAVAIDS	DATE 07-16-25 JCN: 22001835
DRAWN BY W. KING		DRAWING NO. HUM-D-MALSR-G-101 REV.
CHECKED BY C. WULFF		

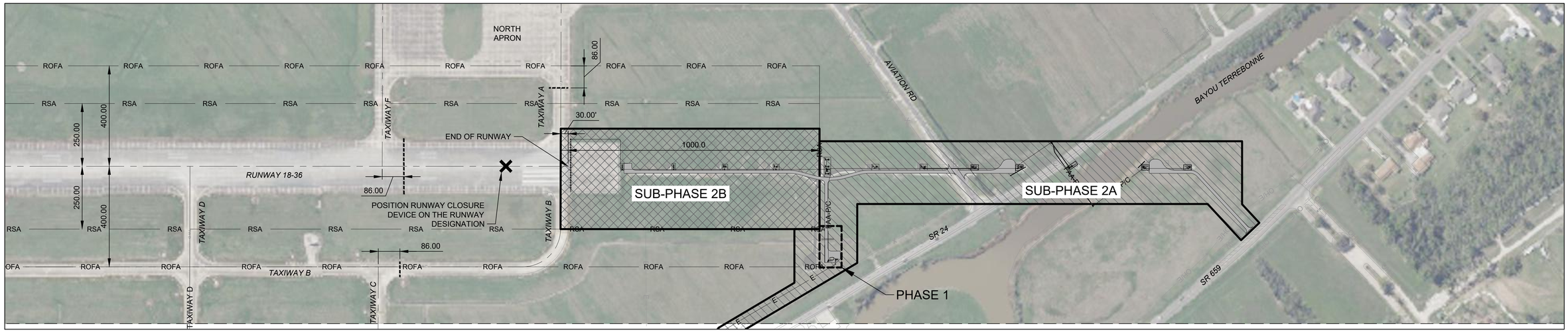

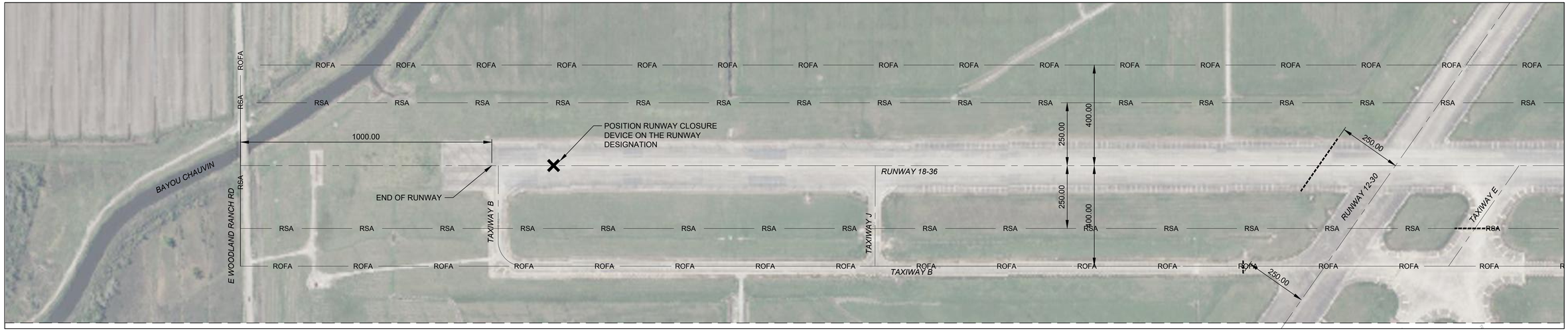

GENERAL PHASING NOTES

1. THE PHASING PLANS HAVE BEEN DEVELOPED IN COORDINATION WITH FAA, AIRPORT OPERATIONS, AND OTHER STAKEHOLDERS AND SHALL BE FOLLOWED WITHOUT REVISION UNLESS APPROVED OTHERWISE IN WRITING BY THE RPR.
2. THE TOTAL CONTRACT DURATION SHALL BE 275 CONTINUOUS CALENDAR DAYS (CCD), WHICH INCLUDES A 35 CCD CLOSEOUT PHASE THAT STARTS AT THE COMPLETION OF PHASE 2.
3. WHEN A CLOSURE OF RUNWAY OR TAXIWAY IS SHOWN ALL ASSOCIATED SIGNAGE SHALL BE COVERED AND ALL EDGE LIGHTING SHALL BE DE-ENERGIZED FOR THE CLOSED PORTION OF THE TAXIWAY.
4. THE LOW-PROFILE BARRICADES AND RUNWAY CLOSURE DEVICES REQUIRED TO CLOSE AIRFIELD PAVEMENTS WILL BE FURNISHED, ERRECTED, AND MAINTAINED BY THE AIRPORT. THE CONTRACTOR SHALL COORDINATE THE PLACEMENT AT LEAST 7 CCD PRIOR TO THE START OF THE PHASE IN WHICH THEY ARE NEEDED.
5. PRIOR TO THE START OF PHYSICAL CONSTRUCTION THE CONTRACTOR SHALL FURNISH AND INSTALL PLACE LOW-PROFILE BARRICADES ALONG THE PROJECT LIMITS DEFINED ON SHEET G-101.
6. THE CONTRACTOR SHALL DEVELOP AND MAINTAIN A CONSTRUCTION SCHEDULE PRIOR TO THE START OF CONSTRUCTION. THIS SCHEDULE SHALL BE UPDATED WEEKLY TO PROVIDE AN ACCURATE 3-WEEK LOOK AHEAD.

PHASE 1

1. THE DURATION OF THIS PHASE IS 218 CONTINUOUS CALENDAR DAYS.
2. THE START OF THIS PHASE SHALL BE BASED ON THE CONTRACT NTP.
3. THIS PHASE HAS BEEN ESTABLISHED TO ALLOW THE CONTRACTOR PERFORM THE FOLLOWING AS A MINIMUM TO AVOID DELAYS DURING CONSTRUCTION:
   - SUBMIT DETAILED CONSTRUCTION SCHEDULE
   - SUBMIT SAFETY PLAN COMPLIANCE DOCUMENT
   - SUBMIT SUBMITTALS, AND OBTAIN APPROVAL, FOR LONG LEAD ITEMS, SUCH AS BUT NOT LIMITED TO: BASE CANS, TRANSFORMERS, CONCRETE/ ASPHALT MIX DESIGNS, LIR SUPPORTS, ETC.
   - DEVELOP TRAFFIC CONTROL PLAN FOR STATE ROUTES 26 AND 659, AND AVIATION ROAD
   - SET UP SURVEY CONTROL AND VERIFY EXISTING SITE CONDITIONS.
   - PLACEMENT OF EMBANKMENT AT THE MALSR SHELTER SITE.
   - CONSOLIDATION OF EMBANKMENT AT MALSR SHELTER SITE. (APPROXIMATELY 6 MONTHS TOTAL)
4. ALL WORK REQUIRED TO SET UP SURVEY CONTROL FOR THE CONSTRUCTION OF THE PROJECT AND TO VERIFY EXISTING CONDITIONS SHALL BE COORDINATED WITH THE RPR WITHIN 5 DAYS OF THE CONTRACT NTP.
5. THE PLACEMENT OF EMBANKMENT SHALL NOT START UNTIL APPROVAL OF THE FAA FORM 7460-1, WHICH CAN TAKE UP TO 45 CCD.
6. THE WORK AREA SHOWN SHALL BE AVAILABLE TO THE CONTRACTOR FOR 14 CCD, 24 HOURS A DAY TO ALLOW FOR THE PLACEMENT OF EMBANKMENT AT THE MALSR SHELTER SITE AND INSTALLATION OF SETTLEMENT MONITORING DEVICES.

PHASE 2

1. THIS PHASE HAS BEEN SPLIT INTO 2 SUB-PHASES AS DESCRIBED HEREIN BASED ON THE WORKING RESTRICTIONS. THE TOTAL DURATION OF THIS PHASE IS 120 CCD.
2. THE START OF THIS PHASE IS 120 DAYS FOLLOWING THE CONTRACT NTP, PROVIDED THE CONTRACTOR HAS ADEQUATE MATERIALS ON HAND AND ALL LONG LEAD SUBMITTALS HAVE BEEN APPROVED. THIS PHASE SHALL NOT START UNTIL THE APPROVAL OF LONG LEAD MATERIAL SUBMITTALS. NO ADDITIONAL TIME WILL BE PROVIDED FOR LATE SUBMITTALS.

SUB-PHASE 2A

1. THE DURATION OF THIS SUB-PHASE IS 120 CCD.
2. WHILE WORKING IN ONLY THIS SUB-PHASE NO AIRFIELD CLOSURES ARE REQUIRED.
3. WHEN WORKING WITHIN THE RIGHT OF WAY FOR STATE ROUTE 26 OR 659 THE WORK SHALL BE COORDINATED WITH THE LA DOTD AND ALL REQUIRED TRAFFIC CONTROL MEASURES SHALL BE IN PLACE.
4. THE WORK AREA SHOWN FOR THIS PHASE SHALL BE AVAILABLE TO THE CONTRACTOR 24 HOURS A DAY, 7 DAYS A WEEK.
5. THE CONSTRUCTION OF THE INFRASTRUCTURE AT THE MALSR SHELTER SITE SHALL NOT START UNTIL THE CONSOLIDATION OF THE EMBANKMENT HAS COMPLETED.

SUB-PHASE 2B

1. THE DURATION OF THIS SUB-PHASE IS 60 CCD AND IS PERFORMED CONCURRENTLY WITH THE LAST 60 CCD OF SUB-PHASE 2A
2. PRIOR TO ANY WORK STARTING IN THIS SUB-PHASE THE CONTRACTOR SHALL HAVE ALL BARRICADES AND RUNWAY CLOSURE DEVICES IN PLACE AND APPROVED BY THE RPR IN WRITING.
3. THE AREA SHOWN FOR THIS PHASE SHALL BE AVAILABLE TO THE CONTRACTOR 24 HOURS A DAY, 7 DAYS A WEEK.

LEGEND

LOW PROFILE BARRICADE PLACED EDGE OF PAVEMENT TO EDGE OF PAVEMENT (TO BE PLACED BY AIRPORT)

RUNWAY CLOSURE MARKER (TO BE PLACED BY AIRPORT)

N

0 100 200 400

SCALE: 1 INCH = 200 FEET

FOR OFFICIAL USE ONLY

PUBLIC AVAILABILITY TO BE DETERMINED UNDER 5 USC 552

COMMONWEALTH OF PENNSYLVANIA — REGISTERED PROFESSIONAL — CHRISTOPHER STEVEN WULFF — ENGINEER — No. PE076766

7/16/25

JACOBS
1100 N GLEBE RD.
SUITE 500
ARLINGTON, VA 22201

REV.	APPROVED DATE	DESCRIPTION	JCN	REDLINE DATE	APVD

DEPARTMENT OF TRANSPORTATION
FEDERAL AVIATION ADMINISTRATION
CENTRAL SERVICE AREA — FORTH WORTH, TX

Jacobs

MALSR REPLACEMENT RUNWAY 18

PHASING PLAN

HOUMA — HOUMA-TERREBONNE AIRPORT — LA

HOUMA-TERRABONNE AIRPORT
HOUMA, LOUISIANA

REVIEWED BY	SUBMITTED BY	APPROVED BY
	SUBMITTER'S TITLE	APPROVER'S TITLE
	DESIGNED BY	ISSUED BY: ENGINEERING SERVICES NAVAIDS
	DRAWN BY	DATE: 07-16-25 — JCN: 22001835
	CHECKED BY	DRAWING NO.: HUM-D-MALSR-G-201 — REV.

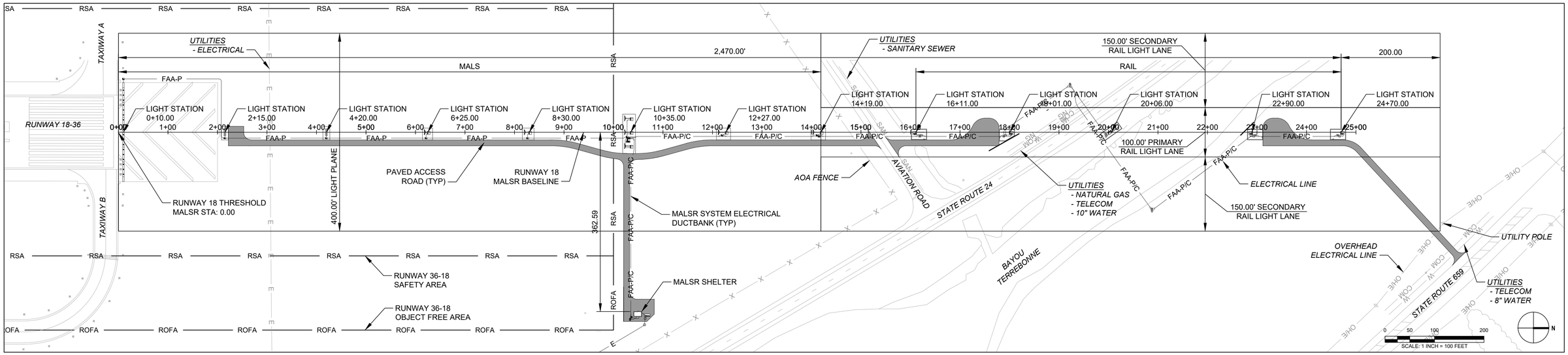

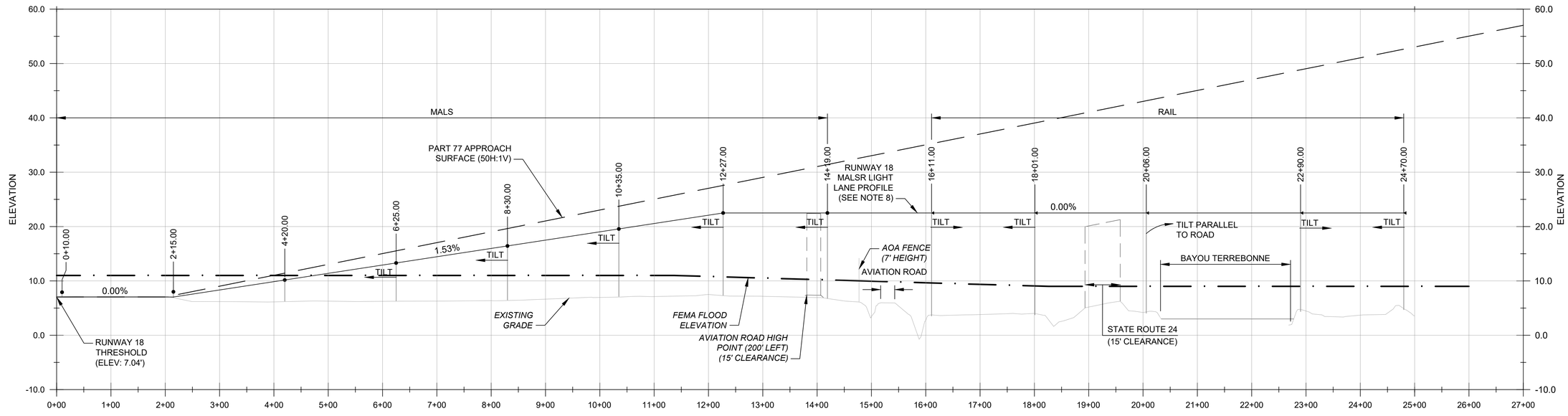

RUNWAY 18 MALSR

HOR SCALE: 1" = 100'
VER SCALE: 1" = 10'

RUNWAY 18 MALSR INSTALLATION SCHEDULE

	STATION	EXISTING GRADE ELEV.	TOP OF FOUNDATION ELEV.	LAMP CENTER ELEV.	SUPPORT HEIGHT (SEE NOTE 4)	LIGHT ANGLE	SUPPORT TYPE (SEE NOTE 6)
MALS	0+10.00	7.04	7.04	7.04 (SEE NOTE 2 & 3)	0.83	3.10	EMT
	2+15.00	6.91	7.00	7.04 (SEE NOTE 3)	0.83	3.20	EMT
	4+20.00	6.25	6.25	10.18	3.93	3.26	EMT
	6+25.00	6.32	6.50	13.31	6.81	3.32	MG-20
	8+30.00	6.47	6.70	16.44	9.74	3.29	MG-20
	10+35.00	7.12	7.25	19.57 (SEE NOTE 4)	12.32	3.35	MG-20
	12+27.00	7.35	7.50	22.50	15.00	3.41	MG-20
	14+19.00	6.77	7.00	22.50	15.50	3.51	MG-20
RAIL	16+11.00	3.52	5.75	22.50	16.75	6.00	MG-20
	18+01.00	3.74	5.25	22.50	17.25	6.00	MG-20
	20+06.00	4.04	5.60	22.50	16.90	6.00	MG-20
	22+90.00	4.36	5.60	22.50	16.90	6.00	MG-20
	24+70.00	4.22	5.60	22.50	16.90	6.00	MG-20

NOTES

1. AT THE THRESHOLD BAR (MALSR STA: 0+10.00), THE INSTALLATION HEIGHT ABOVE GRADE OF ALL LIGHTS ABOVE GRADE WILL BE UNIFORM, THE ELEVATION (MSL) OF THE LIGHTS WILL VARY.
2. THE LIGHTS AT MALSR STA: 0+10.00 AND 2+15.00 SHALL BE INSTALLED AT A MAXIMUM HEIGHT OF 14 INCHES ABOVE THE FOUNDATION
3. ALL LIGHTS AT MALSR STA: 10+35.00 SHALL BE INSTALLED AT THE SAME ELEVATION. INFORMATION PROVIDED IS BASED ON EXTENDED CENTERLINE.
4. STRUCTURE HEIGHT IS THE DIFFERENCE IN ELEVATION BETWEEN THE CENTER OF THE FIXTURE AND THE TOP OF THE FOUNDATION.
5. LIGHT PLANE IS CENTERED ON RUNWAY 18 MALSR BASELINE.
6. SUPPORT TYPE BASED ON FLOODPLAIN LIR HEIGHTS ABOVE GRADE.
7. CONTRACTOR SHALL VERIFY THE LOCATION AND DEPTH OF ALL UTILITIES WITHIN THE PROJECT AREA.
8. PROFILE SHOWN IS FOR THE NEW SYSTEM INSTALLED AS PART OF THIS PROJECT.

COMMONWEALTH OF PENNSYLVANIA
REGISTERED PROFESSIONAL ENGINEER
CHRISTOPHER STEVEN WULFF
No. PE078766
7/16/25

JACOBS
1100 N GLEBE RD.
SUITE 500
ARLINGTON, VA 22201

REV.	APPROVED DATE	DESCRIPTION	JCN	REDLINE DATE	APVD

FOR OFFICIAL USE ONLY
PUBLIC AVAILABILITY TO BE DETERMINED UNDER 5 USC 552

DEPARTMENT OF TRANSPORTATION
FEDERAL AVIATION ADMINISTRATION
CENTRAL SERVICE AREA — FORTH WORTH, TX

Jacobs

MALSR
REPLACEMENT RUNWAY 18
MALSR PLAN AND PROFILE OVERALL

HOUMA — HOUMA-TERREBONNE AIRPORT — LA

HOUMA-TERRABONNE AIRPORT
HOUMA, LOUISIANA

REVIEWED BY	SUBMITTED BY		APPROVED BY
	SUBMITTER'S TITLE		APPROVER'S TITLE
	DESIGNED BY	W. KING	ISSUED BY: ENGINEERING SERVICES NAVAIDS
	DRAWN BY	W. KING	DATE 07-16-25 JCN: 22001835
	CHECKED BY	C. WULFF	DRAWING NO. HUM-D-MALSR-G-300 REV.

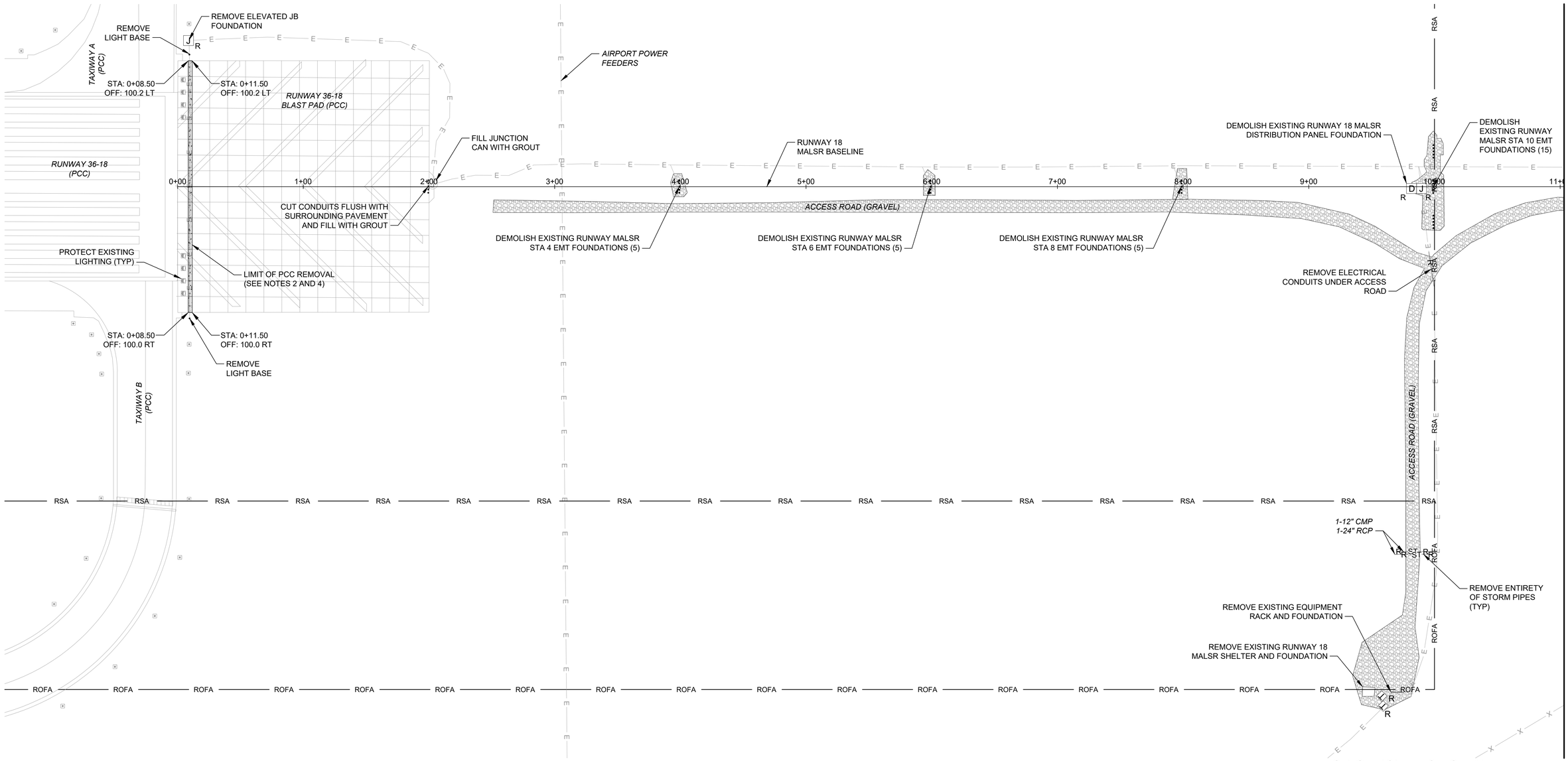

NOTES

1. LIMITS OF GRAVEL ACCESS ROAD AND MAINTENANCE AREAS ARE APPROXIMATE. CONTRACTOR SHALL REMOVE GRAVEL AREA TO THE FULL EXTENT REQUIRED FOR THE INSTALLATION OF THE NEW ACCESS ROAD, MAINTENANCE AREAS, AND 4 INCHES OF TOP SOIL.
2. SAW CUT PAVEMENT FULL DEPTH AT LIMIT OF REMOVAL PRIOR TO PAVEMENT REMOVAL.
3. PRIOR TO THE REMOVAL OF ANY FOUNDATION, EQUIPMENT RACK, ELECTRICAL JUNCTION STRUCTURE, HANDHOLE, OR SHELTER ALL ELECTRICAL APPURTENANCES SHALL BE REMOVED IN ACCORDANCE WITH THE ELECTRICAL DEMOLITION PLAN.
4. PCC REMOVAL SHOWN ALSO INCLUDES THE REMOVAL OF THE 20 MALSR THRESHOLD BAR LIGHT BASES.
5. SEE SPECIFICATION SECTION P-101 FOR BACKFILL REQUIREMENTS.

LEGEND

- REMOVE GRAVEL ACCESS ROAD OR MAINTENANCE AREA (SEE NOTE 1)
- BITUMINOUS PAVEMENT REMOVAL (SEE NOTE 2)
- REMOVE PCC PAVEMENT (10" DEPTH) (SEE NOTE 2)
- E R — REMOVE ELECTRICAL HANDHOLE
- J R — REMOVE ELECTRICAL JUNCTION STRUCTURE
- J R — REMOVE LIGHT BASE CAN
- T R — REMOVE TRANSFORMER FOUNDATION
- R ST R — REMOVE STORM PIPE (SIZE AND TYPE AS INDICATED)

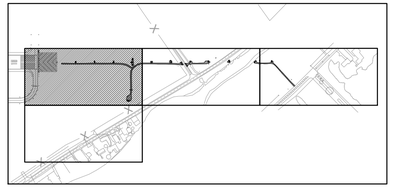

KEY MAP

N

0 40 80 160

SCALE: 1 INCH = 40 FEET

COMMONWEALTH OF PENNSYLVANIA — REGISTERED PROFESSIONAL — CHRISTOPHER STEVEN WULFF — ENGINEER — No. PE078766

7/16/25

FOR OFFICIAL USE ONLY

PUBLIC AVAILABILITY TO BE DETERMINED UNDER 5 USC 552

JACOBS
1100 N GLEBE RD.
SUITE 500
ARLINGTON, VA 22201

REV.	APPROVED DATE	DESCRIPTION	JCN	REDLINE DATE	APVD

Jacobs

DEPARTMENT OF TRANSPORTATION
FEDERAL AVIATION ADMINISTRATION
CENTRAL SERVICE AREA — FORTH WORTH, TX

MALSR REPLACEMENT RUNWAY 18

CIVIL DEMOLITION PLAN

HOUMA — HOUMA-TERREBONNE AIRPORT — LA

HOUMA-TERRABONNE AIRPORT
HOUMA, LOUISIANA

REVIEWED BY	SUBMITTED BY	APPROVED BY	
	SUBMITTER'S TITLE	APPROVER'S TITLE	
	DESIGNED BY W. KING	ISSUED BY: ENGINEERING SERVICES NAVAIDS	DATE 07-16-25 JCN: 22001835
	DRAWN BY W. KING		DRAWING NO. HUM-D-MALSR-CD101 REV.
	CHECKED BY C. WULFF		

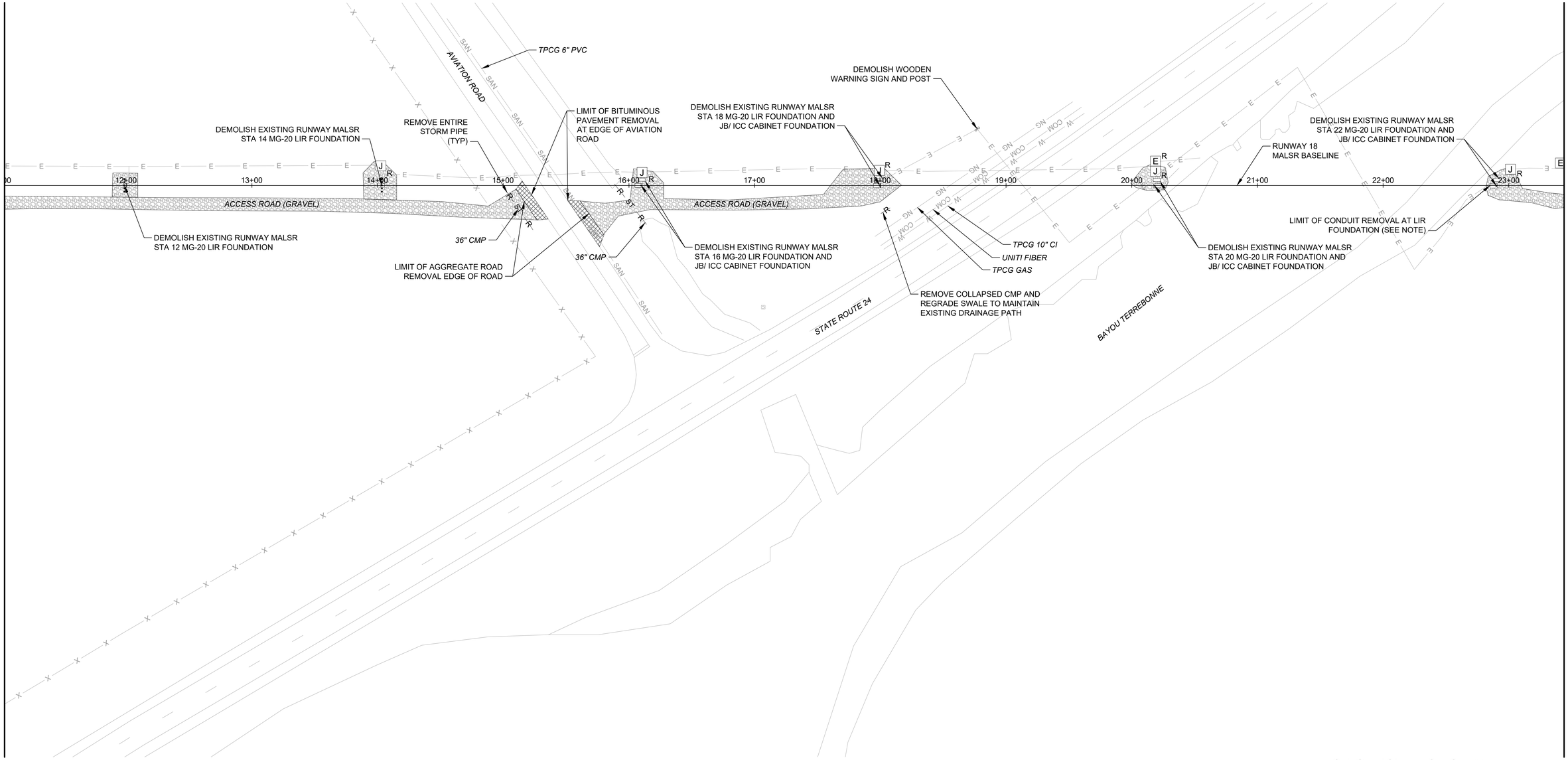

NOTES

1. LIMITS OF GRAVEL ACCESS ROAD AND MAINTENANCE AREAS ARE APPROXIMATE. CONTRACTOR SHALL REMOVE GRAVEL AREA TO THE FULL EXTENT REQUIRED FOR THE INSTALLATION OF THE NEW ACCESS ROAD, MAINTENANCE AREAS, AND 4 INCHES OF TOP SOIL.
2. SAW CUT PAVEMENT FULL DEPTH AT LIMIT OF REMOVAL PRIOR TO PAVEMENT REMOVAL.
3. PRIOR TO THE REMOVAL OF ANY FOUNDATION, EQUIPMENT RACK, ELECTRICAL JUNCTION STRUCTURE, HANDHOLE, OR SHELTER ALL ELECTRICAL APPURTENANCES SHALL BE REMOVED IN ACCORDANCE WITH THE ELECTRICAL DEMOLITION PLAN.
4. SEE SPECIFICATION SECTION P-101 FOR BACKFILL REQUIREMENTS.

LEGEND

- REMOVE GRAVEL ACCESS ROAD OR MAINTENANCE AREA (SEE NOTE 1)
- BITUMINOUS PAVEMENT REMOVAL (SEE NOTE 2)
- REMOVE PCC PAVEMENT (10" DEPTH) (SEE NOTE 2)
- E R — REMOVE ELECTRICAL HANDHOLE
- J R — REMOVE ELECTRICAL JUNCTION STRUCTURE
- (J) R — REMOVE LIGHT BASE CAN
- T R — REMOVE TRANSFORMER FOUNDATION
- R ST R — REMOVE STORM PIPE (SIZE AND TYPE AS INDICATED)

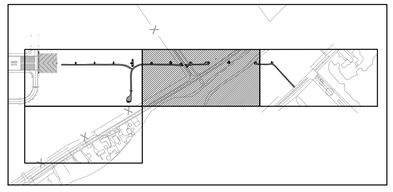

KEY MAP

N

0 40 80 160

SCALE: 1 INCH = 40 FEET

COMMONWEALTH OF PENNSYLVANIA — REGISTERED PROFESSIONAL ENGINEER — CHRISTOPHER STEVEN WULFF — No. PE078766

7/16/25

FOR OFFICIAL USE ONLY
PUBLIC AVAILABILITY TO BE DETERMINED UNDER 5 USC 552

JACOBS
1100 N GLEBE RD.
SUITE 500
ARLINGTON, VA 22201

REV.	APPROVED DATE	DESCRIPTION	JCN	REDLINE DATE	APVD

Jacobs

DEPARTMENT OF TRANSPORTATION
FEDERAL AVIATION ADMINISTRATION
CENTRAL SERVICE AREA — FORTH WORTH, TX

MALSR
REPLACEMENT RUNWAY 18

CIVIL DEMOLITION PLAN

HOUMA — HOUMA-TERREBONNE AIRPORT — LA

HOUMA-TERRABONNE AIRPORT
HOUMA, LOUISIANA

REVIEWED BY	SUBMITTED BY	APPROVED BY
	SUBMITTER'S TITLE	APPROVER'S TITLE
	DESIGNED BY W. KING	ISSUED BY: ENGINEERING SERVICES NAVAIDS
	DRAWN BY W. KING	DATE 07-16-25 — JCN: 22001835
	CHECKED BY C. WULFF	DRAWING NO. HUM-D-MALSR-CD102 — REV.

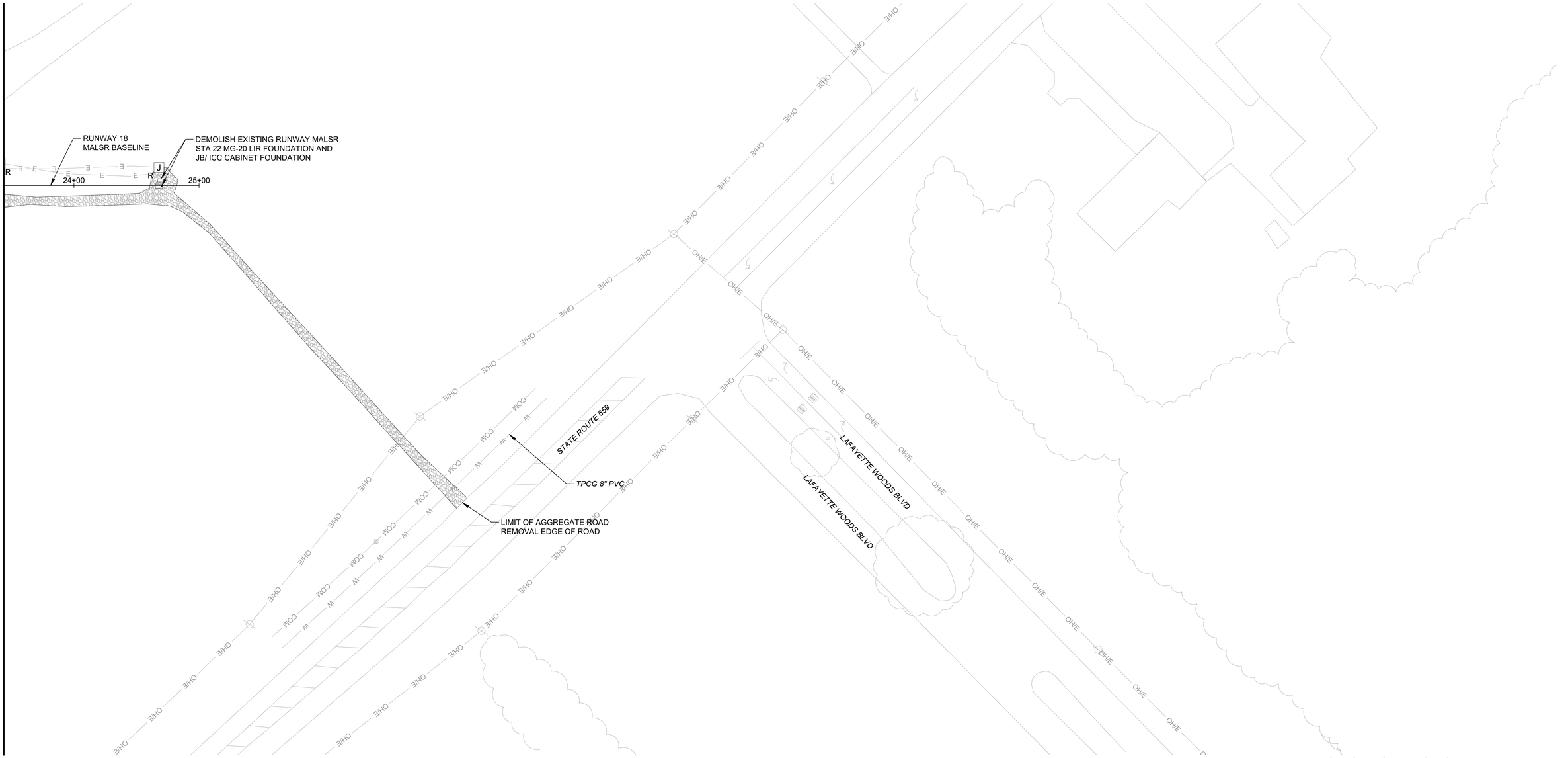

NOTES

1. LIMITS OF GRAVEL ACCESS ROAD AND MAINTENANCE AREAS ARE APPROXIMATE. CONTRACTOR SHALL REMOVE GRAVEL AREA TO THE FULL EXTENT REQUIRED FOR THE INSTALLATION OF THE NEW ACCESS ROAD, MAINTENANCE AREAS, AND 4 INCHES OF TOP SOIL.
2. SAW CUT PAVEMENT FULL DEPTH AT LIMIT OF REMOVAL PRIOR TO PAVEMENT REMOVAL.
3. PRIOR TO THE REMOVAL OF ANY FOUNDATION, EQUIPMENT RACK, ELECTRICAL JUNCTION STRUCTURE, HANDHOLE, OR SHELTER ALL ELECTRICAL APPURTENANCES SHALL BE REMOVED IN ACCORDANCE WITH THE ELECTRICAL DEMOLITION PLAN.
4. SEE SPECIFICATION SECTION P-101 FOR BACKFILL REQUIREMENTS.

LEGEND

- REMOVE GRAVEL ACCESS ROAD OR MAINTENANCE AREA (SEE NOTE 1)
- BITUMINOUS PAVEMENT REMOVAL (SEE NOTE 2)
- REMOVE PCC PAVEMENT (10" DEPTH) (SEE NOTE 2)
- (E)R REMOVE ELECTRICAL HANDHOLE
- (J)R REMOVE ELECTRICAL JUNCTION STRUCTURE
- (J)R REMOVE LIGHT BASE CAN
- (T)R REMOVE TRANSFORMER FOUNDATION
- —R—ST—R— REMOVE STORM PIPE (SIZE AND TYPE AS INDICATED)

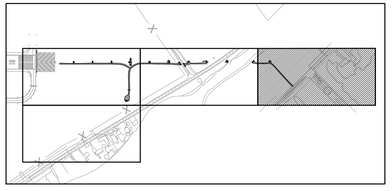

KEY MAP

N

0 40 80 160

SCALE: 1 INCH = 40 FEET

COMMONWEALTH OF PENNSYLVANIA
REGISTERED PROFESSIONAL
CHRISTOPHER STEVEN WULFF
ENGINEER
No. PE078766
7/16/25

JACOBS
1100 N GLEBE RD.
SUITE 500
ARLINGTON, VA 22201

REV.	APPROVED DATE	DESCRIPTION	JCN	REDLINE DATE	APVD

FOR OFFICIAL USE ONLY
PUBLIC AVAILABILITY TO BE DETERMINED UNDER 5 USC 552

Jacobs

DEPARTMENT OF TRANSPORTATION
FEDERAL AVIATION ADMINISTRATION
CENTRAL SERVICE AREA — FORTH WORTH, TX

MALSR
REPLACEMENT RUNWAY 18

CIVIL DEMOLITION PLAN

HOUMA — HOUMA-TERREBONNE AIRPORT — LA

HOUMA-TERRABONNE AIRPORT
HOUMA, LOUISIANA

REVIEWED BY	SUBMITTED BY		APPROVED BY
	SUBMITTER'S TITLE		APPROVER'S TITLE
	DESIGNED BY W. KING	ISSUED BY: ENGINEERING SERVICES NAVAIDS	DATE 07-16-25 JCN: 22001835
	DRAWN BY W. KING		DRAWING NO. HUM-D-MALSR-CD103 REV.
	CHECKED BY C. WULFF		

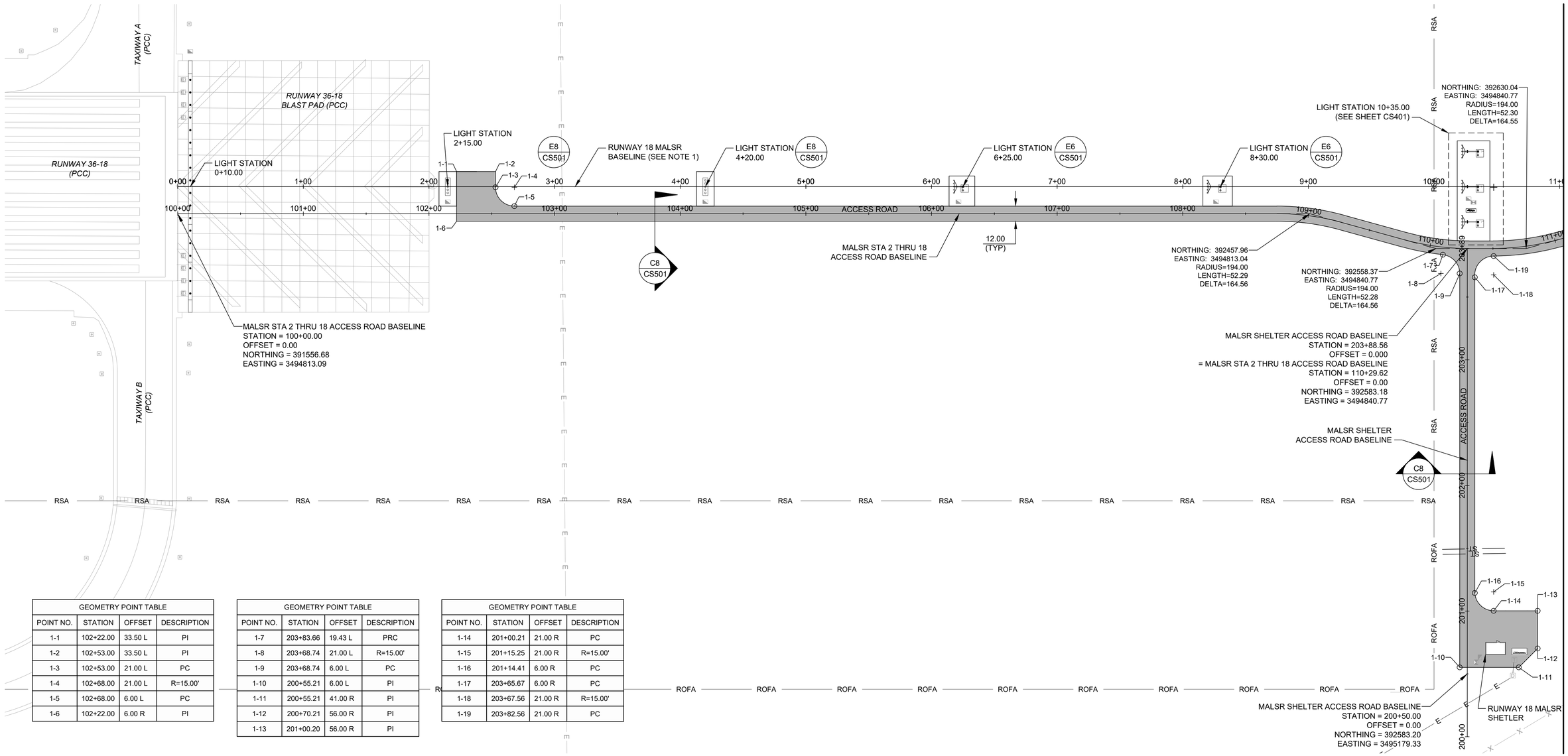

GEOMETRY POINT TABLE			
POINT NO.	STATION	OFFSET	DESCRIPTION
1-1	102+22.00	33.50 L	PI
1-2	102+53.00	33.50 L	PI
1-3	102+53.00	21.00 L	PC
1-4	102+68.00	21.00 L	R=15.00'
1-5	102+68.00	6.00 L	PC
1-6	102+22.00	6.00 R	PI

GEOMETRY POINT TABLE			
POINT NO.	STATION	OFFSET	DESCRIPTION
1-7	203+83.66	19.43 L	PRC
1-8	203+68.74	21.00 L	R=15.00'
1-9	203+68.74	6.00 L	PC
1-10	200+55.21	6.00 L	PI
1-11	200+55.21	41.00 R	PI
1-12	200+70.21	56.00 R	PI
1-13	201+00.20	56.00 R	PI

GEOMETRY POINT TABLE			
POINT NO.	STATION	OFFSET	DESCRIPTION
1-14	201+00.21	21.00 R	PC
1-15	201+15.25	21.00 R	R=15.00'
1-16	201+14.41	6.00 R	PC
1-17	203+65.67	6.00 R	PC
1-18	203+67.56	21.00 R	R=15.00'
1-19	203+82.56	21.00 R	PC

NOTES

1. FOR RUNWAY 18 MALSR BASELINE LAYOUT SEE SURVEY CONTROL PLAN.
2. WHERE PCC MAINTENANCE AREAS ARE ADJACENT TO THE ACCESS ROAD THE MAINTENANCE AREA SHALL ABUT THE ACCESS ROADWAY. THE ROADWAY GEOMETRY DICTATES THE INTERFACE OF THE TWO AREAS.

LEGEND

BITUMINOUS PAVEMENT

FAA FENCE

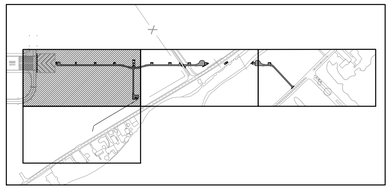

KEY MAP

N

0 20 40 80

SCALE: 1 INCH = 40 FEET

COMMONWEALTH OF PENNSYLVANIA
REGISTERED PROFESSIONAL
CHRISTOPHER STEVEN WULFF
ENGINEER
No. PE078766

7/16/25

FOR OFFICIAL USE ONLY
PUBLIC AVAILABILITY TO BE DETERMINED UNDER 5 USC 552

JACOBS
1100 N GLEBE RD.
SUITE 500
ARLINGTON, VA 22201

REV.	APPROVED DATE	DESCRIPTION	JCN	REDLINE DATE	APVD

Jacobs

HOUMA-TERRABONNE AIRPORT
HOUMA, LOUISIANA

DEPARTMENT OF TRANSPORTATION
FEDERAL AVIATION ADMINISTRATION
CENTRAL SERVICE AREA — FORTH WORTH, TX

MALSR
REPLACEMENT RUNWAY 18

CIVIL SITE PLAN

HOUMA — HOUMA-TERREBONNE AIRPORT — LA

REVIEWED BY	SUBMITTED BY	APPROVED BY	
	SUBMITTER'S TITLE	APPROVER'S TITLE	
DESIGNED BY W. KING	ISSUED BY: ENGINEERING SERVICES NAVAIDS	DATE 07-16-25	JCN: 22001835
DRAWN BY W. KING		DRAWING NO. HUM-D-MALSR-CS101	REV.
CHECKED BY C. WULFF			

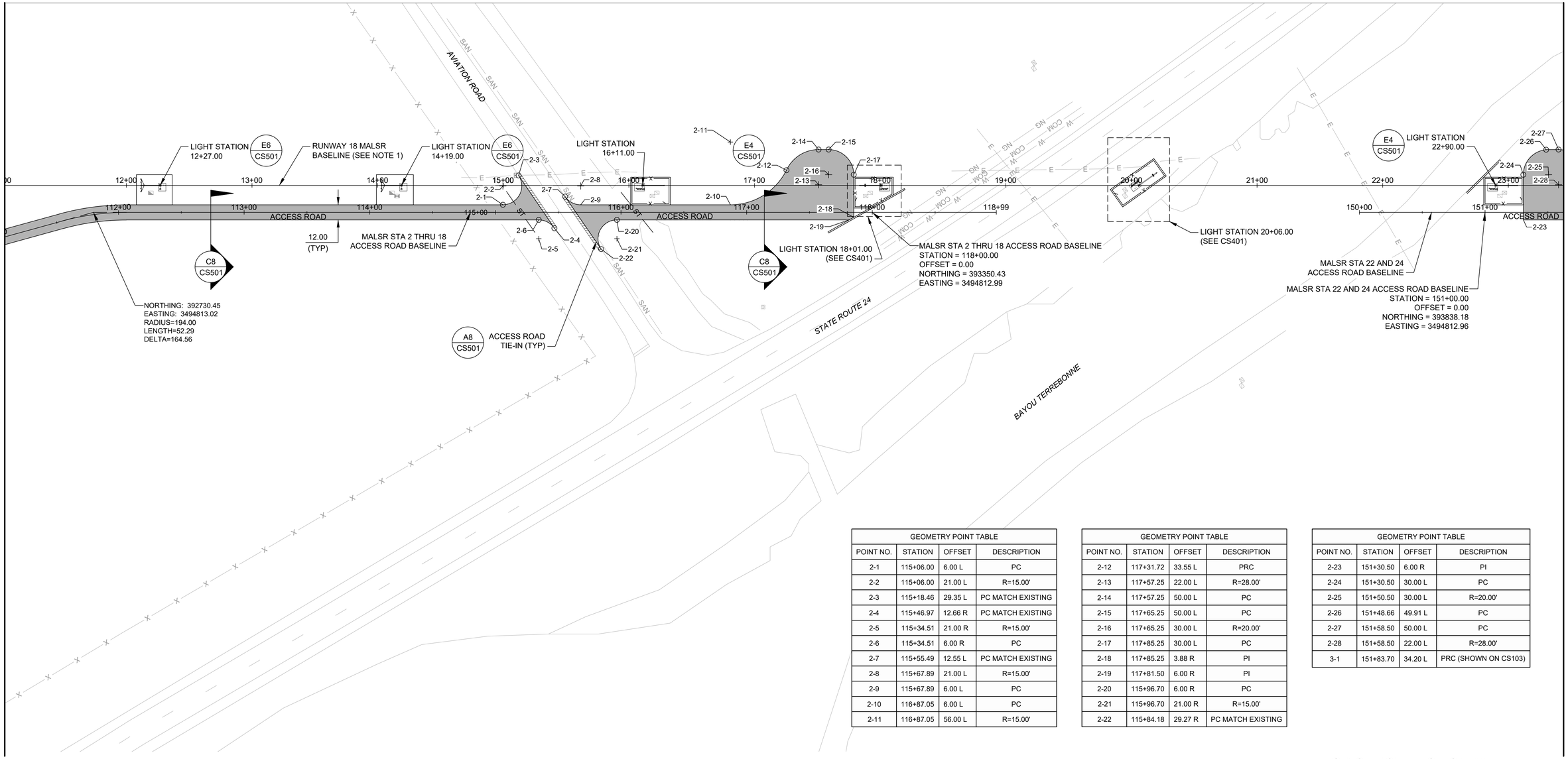

GEOMETRY POINT TABLE			
POINT NO.	STATION	OFFSET	DESCRIPTION
2-1	115+06.00	6.00 L	PC
2-2	115+06.00	21.00 L	R=15.00'
2-3	115+18.46	29.35 L	PC MATCH EXISTING
2-4	115+46.97	12.66 R	PC MATCH EXISTING
2-5	115+34.51	21.00 R	R=15.00'
2-6	115+34.51	6.00 R	PC
2-7	115+55.49	12.55 L	PC MATCH EXISTING
2-8	115+67.89	21.00 L	R=15.00'
2-9	115+67.89	6.00 L	PC
2-10	116+87.05	6.00 L	PC
2-11	116+87.05	56.00 L	R=15.00'

GEOMETRY POINT TABLE			
POINT NO.	STATION	OFFSET	DESCRIPTION
2-12	117+31.72	33.55 L	PRC
2-13	117+57.25	22.00 L	R=28.00'
2-14	117+57.25	50.00 L	PC
2-15	117+65.25	50.00 L	PC
2-16	117+65.25	30.00 L	R=20.00'
2-17	117+85.25	30.00 L	PC
2-18	117+85.25	3.88 R	PI
2-19	117+81.50	6.00 R	PI
2-20	115+96.70	6.00 R	PC
2-21	115+96.70	21.00 R	R=15.00'
2-22	115+84.18	29.27 R	PC MATCH EXISTING

GEOMETRY POINT TABLE			
POINT NO.	STATION	OFFSET	DESCRIPTION
2-23	151+30.50	6.00 R	PI
2-24	151+30.50	30.00 L	PC
2-25	151+50.50	30.00 L	R=20.00'
2-26	151+48.66	49.91 L	PC
2-27	151+58.50	50.00 L	PC
2-28	151+58.50	22.00 L	R=28.00'
3-1	151+83.70	34.20 L	PRC (SHOWN ON CS103)

NOTES

1. FOR RUNWAY 18 MALSR BASELINE LAYOUT SEE SURVEY CONTROL PLAN.
2. WHERE PCC MAINTENANCE AREAS ARE ADJACENT TO THE ACCESS ROAD THE MAINTENANCE AREA SHALL ABUT THE ACCESS ROADWAY. THE ROADWAY GEOMETRY DICTATES THE INTERFACE OF THE TWO AREAS.

LEGEND

BITUMINOUS PAVEMENT

FAA FENCE

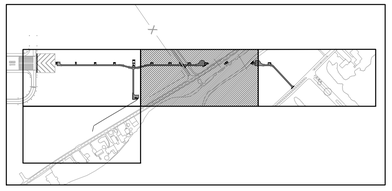

KEY MAP

N

0 20 40 80

SCALE: 1 INCH = 40 FEET

COMMONWEALTH OF PENNSYLVANIA
REGISTERED PROFESSIONAL
CHRISTOPHER STEVEN WULFF
ENGINEER
No. PE078766
7/16/25

FOR OFFICIAL USE ONLY
PUBLIC AVAILABILITY TO BE DETERMINED UNDER 5 USC 552

JACOBS
1100 N GLEBE RD.
SUITE 500
ARLINGTON, VA 22201

REV.	APPROVED DATE	DESCRIPTION	JCN	REDLINE DATE	APVD

DEPARTMENT OF TRANSPORTATION
FEDERAL AVIATION ADMINISTRATION
CENTRAL SERVICE AREA — FORTH WORTH, TX

Jacobs

MALSR REPLACEMENT RUNWAY 18

CIVIL SITE PLAN

HOUMA — HOUMA-TERREBONNE AIRPORT — LA

HOUMA-TERRABONNE AIRPORT
HOUMA, LOUISIANA

REVIEWED BY	SUBMITTED BY		APPROVED BY
	SUBMITTER'S TITLE		APPROVER'S TITLE
	DESIGNED BY	W. KING	ISSUED BY: ENGINEERING SERVICES NAVAIDS
	DRAWN BY	W. KING	DATE: 07-16-25 JCN: 22001835
	CHECKED BY	C. WULFF	DRAWING NO.: HUM-D-MALSR-CS102 REV.

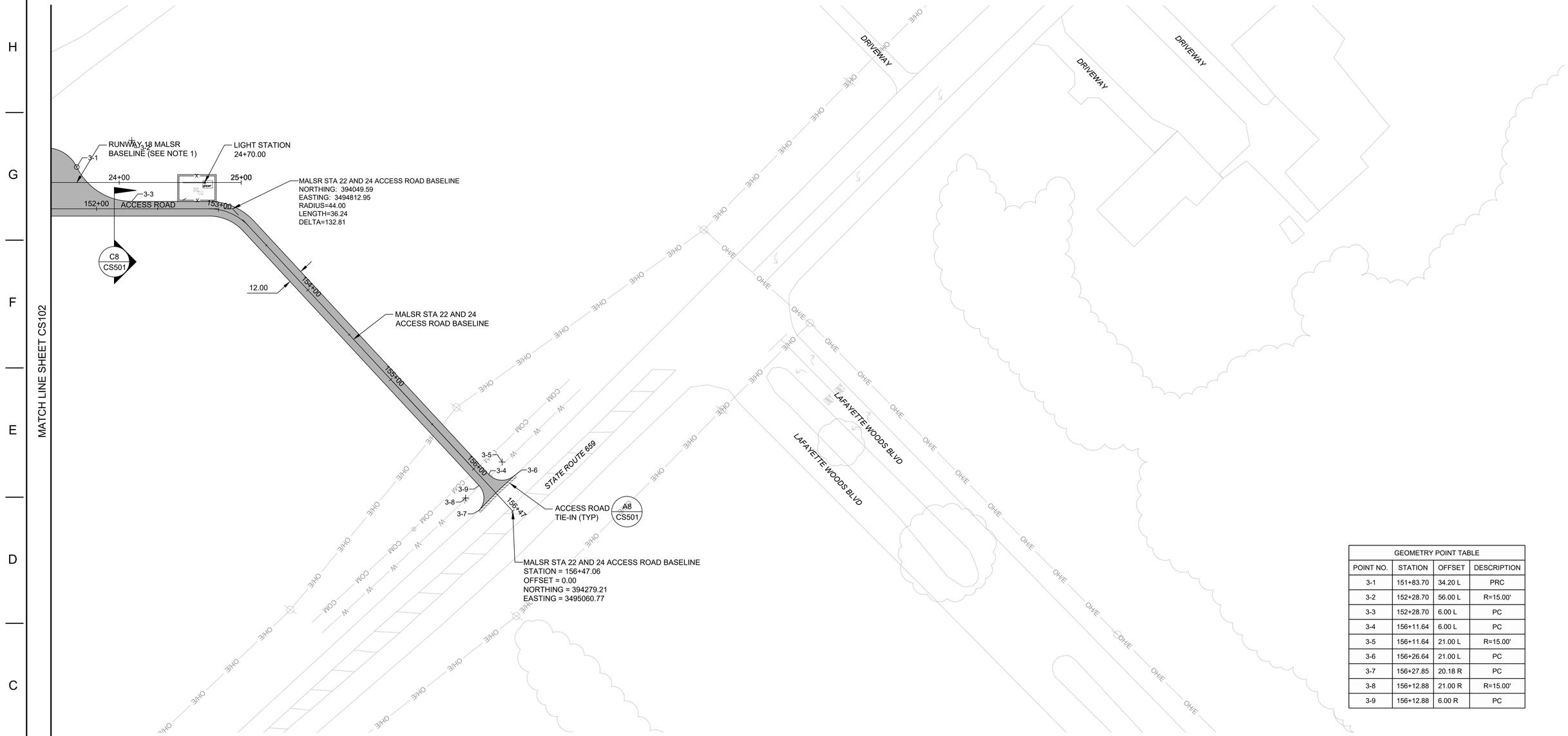

GEOMETRY POINT TABLE			
POINT NO.	STATION	OFFSET	DESCRIPTION
3-1	151+83.70	34.20 L	PRC
3-2	152+28.70	56.00 L	R=15.00'
3-3	152+28.70	6.00 L	PC
3-4	156+11.64	6.00 L	PC
3-5	156+11.64	21.00 L	R=15.00'
3-6	156+26.64	21.00 L	PC
3-7	156+27.85	20.18 R	PC
3-8	156+12.88	21.00 R	R=15.00'
3-9	156+12.88	6.00 R	PC

NOTES

1. FOR RUNWAY 18 MALSR BASELINE LAYOUT SEE SURVEY CONTROL PLAN.
2. WHERE PCC MAINTENANCE AREAS ARE ADJACENT TO THE ACCESS ROAD THE MAINTENANCE AREA SHALL ABUT THE ACCESS ROADWAY. THE ROADWAY GEOMETRY DICTATES THE INTERFACE OF THE TWO AREAS.

LEGEND

BITUMINOUS PAVEMENT

FAA FENCE

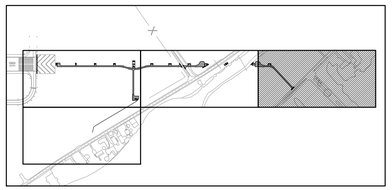

KEY MAP

N

0 20 40 80

SCALE: 1 INCH = 40 FEET

COMMONWEALTH OF PENNSYLVANIA
REGISTERED PROFESSIONAL ENGINEER
CHRISTOPHER STEVEN WULFF
No. PE078766
7/16/25

HOUMA-TERRABONNE AIRPORT
HOUMA, LOUISIANA

JACOBS
1100 N GLEBE RD.
SUITE 500
ARLINGTON, VA 22201

Jacobs

REV.	APPROVED DATE	DESCRIPTION	JCN	REDLINE DATE	APVD

FOR OFFICIAL USE ONLY
PUBLIC AVAILABILITY TO BE DETERMINED UNDER 5 USC 552

DEPARTMENT OF TRANSPORTATION
FEDERAL AVIATION ADMINISTRATION
CENTRAL SERVICE AREA FORTH WORTH, TX

MALSR
REPLACEMENT RUNWAY 18

CIVIL SITE PLAN

HOUMA HOUMA-TERREBONNE AIRPORT LA

REVIEWED BY	SUBMITTED BY	APPROVED BY
	SUBMITTER'S TITLE	APPROVER'S TITLE
	DESIGNED BY W. KING	ISSUED BY: ENGINEERING SERVICES NAVAIDS
	DRAWN BY W. KING	DATE 07-16-25 JCN: 22001835
	CHECKED BY C. WULFF	DRAWING NO. HUM-D-MALSR-CS103 REV.

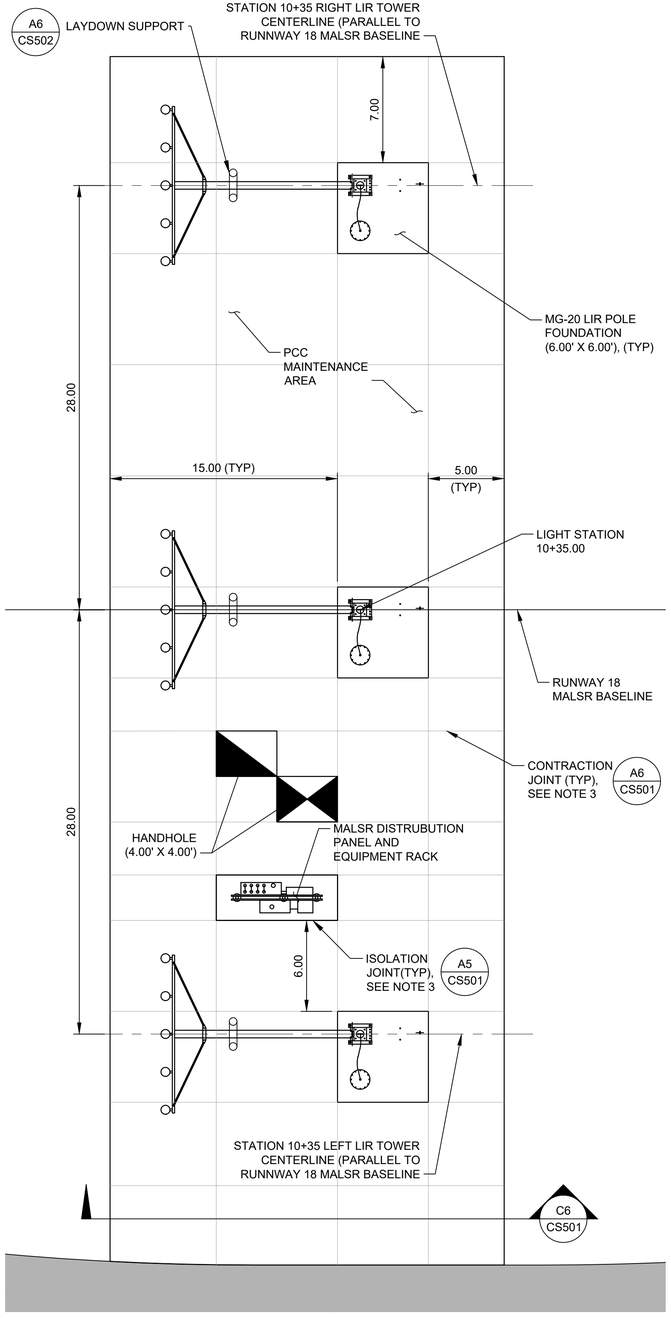

MALSR LIGHT STATION 10+35.00 ENLARGED PLAN
1" = 5'

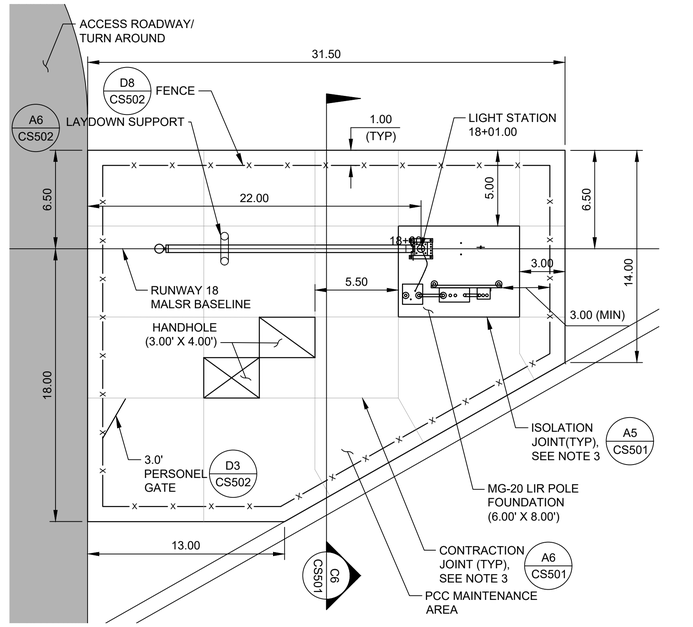

LIGHT STATION 18+01.00 ENLARGED PLAN
1" = 5'

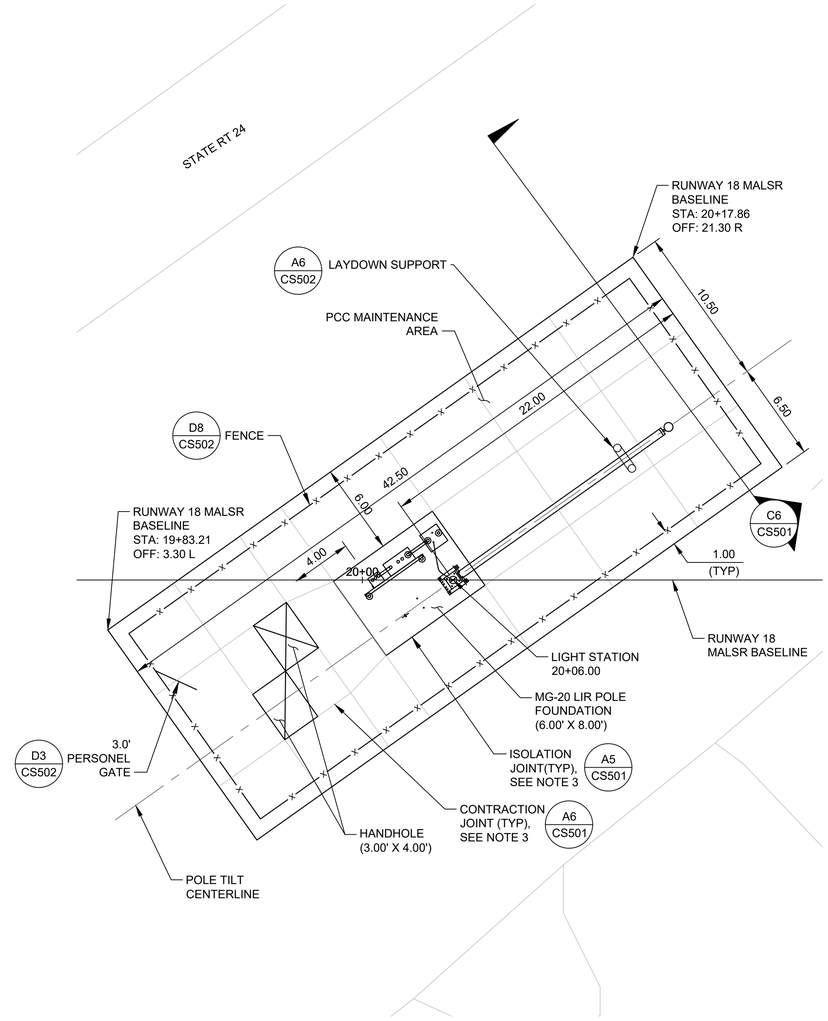

MALSR LIGHT STATION 20+06.00 ENLARGED PLAN
1" = 5'

NOTES:

1. LIR POLE SHALL BE CUT TO LENGTH TO ALLOW FOR THE LIGHT TO BE INSTALLED AT THE ELEVATION SHOWN ON G-300.
2. AREA ADJACENT TO MAINTENANCE AREA SHALL TIE INTO EXISTING GRADE AT A MAXIMUM OF 3.0% BETWEEN STA 0+00 AND 10+00, ALL OTHER AREAS SHALL BE 4H:1V MAX.
3. PCC JOINT LAYOUT SHOWN IS NOTIONAL. CONTRACTOR SHALL PROVIDE JOINT LAYOUT BASED ON THE SIZE OF THE JUNCTION STRUCTURES PROCURED WITH A MAXIMUM JOINT SPACING OF 12.5'.

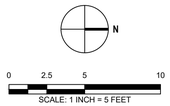

FOR OFFICIAL USE ONLY
PUBLIC AVAILABILITY TO BE DETERMINED UNDER 5 USC 552

JACOBS
1100 N GLEBE RD.
SUITE 500
ARLINGTON, VA 22201

REV.	APPROVED DATE	DESCRIPTION	JCN	REDLINE DATE	APVD

DEPARTMENT OF TRANSPORTATION
FEDERAL AVIATION ADMINISTRATION
CENTRAL SERVICE AREA — FORTH WORTH, TX

Jacobs

MALSR REPLACEMENT RUNWAY 18

CIVIL SITE PLAN ENLARGED VIEWS

HOUMA — HOUMA-TERREBONNE AIRPORT — LA

HOUMA-TERRABONNE AIRPORT
HOUMA, LOUISIANA

REVIEWED BY	SUBMITTED BY		APPROVED BY
	SUBMITTER'S TITLE		APPROVER'S TITLE
DESIGNED BY W. KING	ISSUED BY	DATE 07-16-25	JCN: 22001835
DRAWN BY W. KING	ENGINEERING SERVICES NAVAIDS	DRAWING NO. HUM-D-MALSR-CS401	REV.
CHECKED BY C. WULFF			

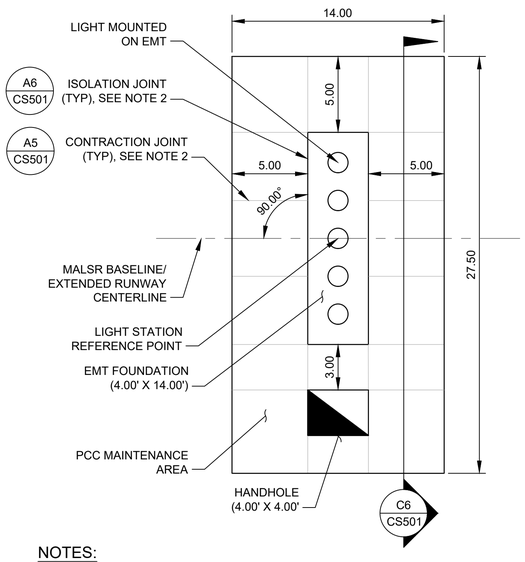

NOTES:

1. AREA ADJACENT TO MAINTENANCE AREA SHALL TIE INTO EXISTING GRADE AT A MAXIMUM OF 3.0%.
2. PCC JOINT LAYOUT SHOWN IS NOTIONAL. CONTRACTOR SHALL PROVIDE JOINT LAYOUT BASED ON THE SIZE OF THE JUNCTION STRUCTURES PROCURED WITH A MAXIMUM JOINT SPACING OF 12.5'.

E8 CS101 TYPICAL LIGHT STATION EMT (5 LIGHTS)
NTS

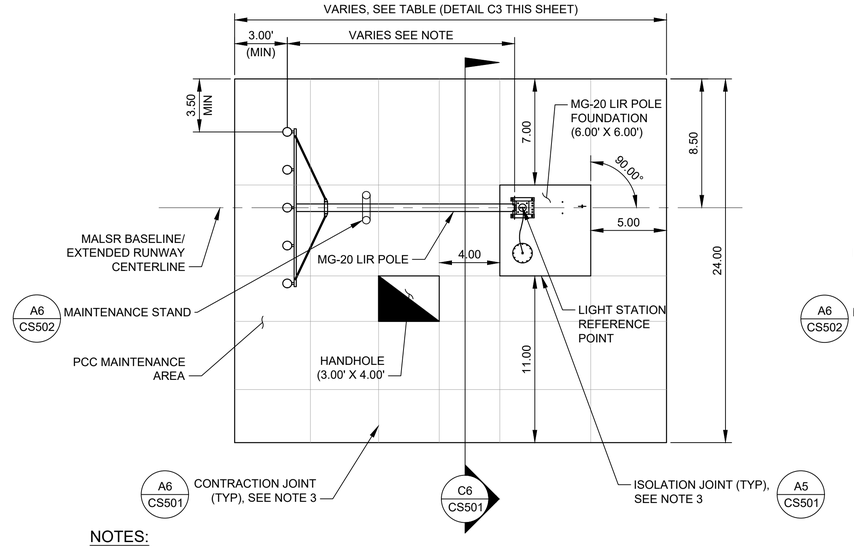

NOTES:

1. LIR POLE SHALL BE CUT TO LENGTH TO ALLOW FOR THE LIGHT TO BE INSTALLED AT THE ELEVATION SHOWN ON G-300.
2. AREA ADJACENT TO MAINTENANCE AREA SHALL TIE INTO EXISTING GRADE AT A MAXIMUM OF 3.0% BETWEEN STA 0+00 AND 10+00, ALL OTHER AREAS SHALL BE 4H:1V MAX.
3. PCC JOINT LAYOUT SHOWN IS NOTIONAL. CONTRACTOR SHALL PROVIDE JOINT LAYOUT BASED ON THE SIZE OF THE JUNCTION STRUCTURES PROCURED WITH A MAXIMUM JOINT SPACING OF 12.5'.

E6 CS101 TYPICAL LIGHT STATION MG-20 WITH LIGHT BAR
NTS
CS102

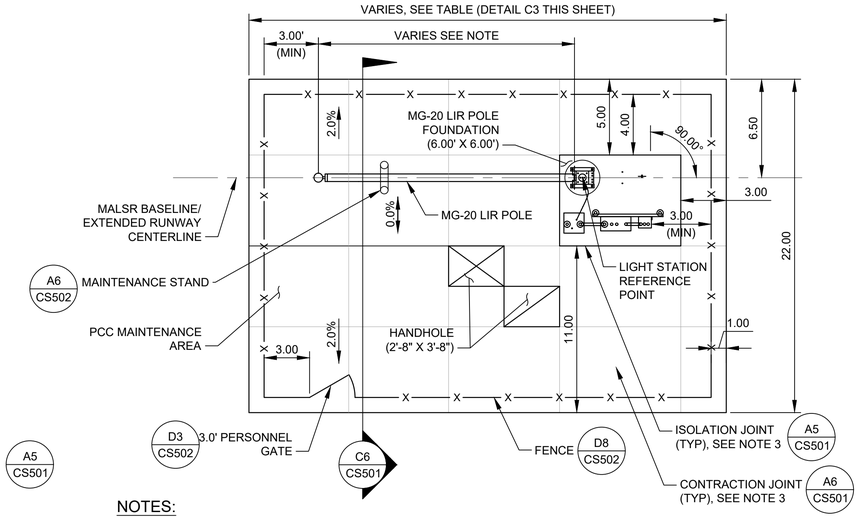

NOTES:

1. LIR POLE SHALL BE CUT TO LENGTH TO ALLOW FOR THE LIGHT TO BE INSTALLED AT THE ELEVATION SHOWN ON G-300.
2. AREA ADJACENT TO MAINTENANCE AREA SHALL TIE INTO EXISTING GRADE AT A MAXIMUM OF 3.0% BETWEEN STA 0+00 AND 10+00, ALL OTHER AREAS SHALL BE 4H:1V MAX.
3. PCC JOINT LAYOUT SHOWN IS NOTIONAL. CONTRACTOR SHALL PROVIDE JOINT LAYOUT BASED ON THE SIZE OF THE JUNCTION STRUCTURES PROCURED WITH A MAXIMUM JOINT SPACING OF 12.5'. NO FENCE POST SHALL BE LOCATED WITHIN 12" OF A PCC JOINT.

E4 CS102 TYPICAL LIGHT STATION MG-20 WITH RAIL
NTS
CS103

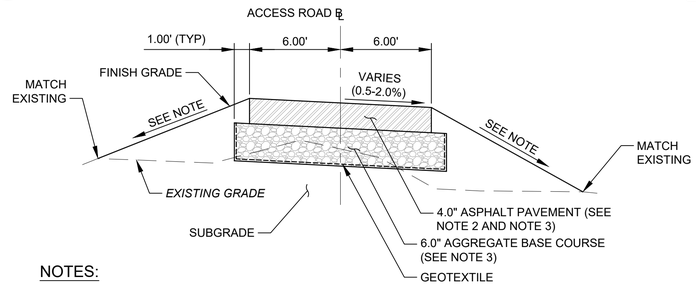

NOTES:

1. MAXIMUM SLOPE STA 102+00 TO 110+10 IS 3.0%, MAXIMUM SLOPE ALL OTHER LOCATIONS IS 4H:1V.
2. IF PLACED IN 2 LIFTS, BITUMINOUS TACK COAT SHALL BE APPLIED BETWEEN LIFTS.
3. ACCESS ROAD ADD ALTERNATE: 6" PCC WITH WELDED WIRE REINFORCEMENT (SEE C6, THIS SHEET) ON 4" AGGREGATE BASE COURSE. MAXIMUM JOINT SPACING 12'. CONTRACTOR TO SUBMIT JOINTING PLAN FOR APPROVAL.

C8 CS101 ACCESS ROAD TYPICAL SECTION
NTS
CS102, CS103

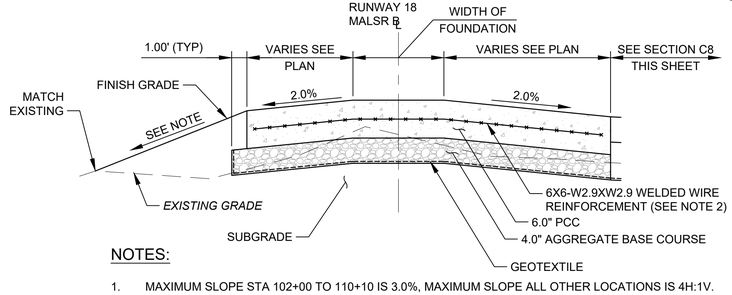

NOTES:

1. MAXIMUM SLOPE STA 102+00 TO 110+10 IS 3.0%, MAXIMUM SLOPE ALL OTHER LOCATIONS IS 4H:1V.
2. WELDED WIRE REINFORCEMENT SHALL BE PLACED AT THE MID SLAB THICKNESS. BE CONTINUOUS THROUGH ALL CONTRACTION JOINTS. IT SHALL STOP 3 INCHES FROM ISOLATION JOINTS OR EDGES OF PAVEMENT.

C6 CS401 MAINTENANCE AREA TYPICAL SECTION
NTS
CS501

LIGHT STATION	LENGTH
6+25.00	20.50'
8+30.00	23.50'
10+35.00	SEE NOTE
12+27.00	28.50'
14+19.00	29.50'
16+11.00	31.50'
18+01.00	SEE NOTE
20+06.00	SEE NOTE
22+90.00	31.50'
24+50.00	31.50'

NOTE:

1. REFER TO CS401 FOR LIGHT STATION CONFIGURATION.

C3 CS501 LENGTH OF MAINTENANCE AREAS TABLE
NTS

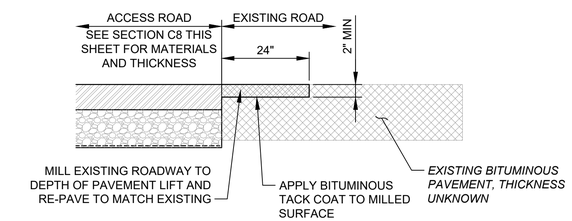

A8 CS101 ACCESS ROAD TIE-IN (BASE BID ONLY)
NTS

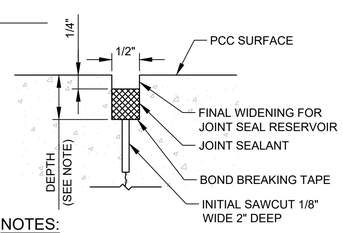

NOTES:

1. DEPTH OF SEALANT PER MANUFACTURER'S RECOMMENDATIONS.
2. INSTALL CLOSED CELL RESILIENT FOAM, SIZED TO FIT INITIAL SAW, CUT IMMEDIATELY FOLLOWING SAW CUT.

A6 CS401 CONTRACTION JOINT
NTS
CS501

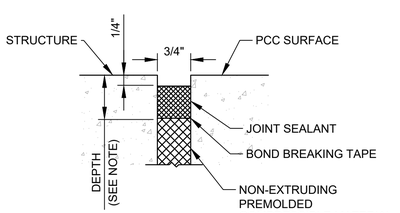

NOTES:

1. DEPTH OF SEALANT PER MANUFACTURER'S RECOMMENDATIONS.

A5 CS401 ISOLATION JOINT
NTS
CS501

FOR OFFICIAL USE ONLY
PUBLIC AVAILABILITY TO BE DETERMINED UNDER 5 USC 552

COMMONWEALTH OF PENNSYLVANIA — REGISTERED PROFESSIONAL — CHRISTOPHER STEVEN WULFF — ENGINEER — No. PE078766
7/16/25

JACOBS
1100 N GLEBE RD.
SUITE 500
ARLINGTON, VA 22201

REV.	APPROVED DATE	DESCRIPTION	JCN	REDLINE DATE	APVD

Jacobs

DEPARTMENT OF TRANSPORTATION
FEDERAL AVIATION ADMINISTRATION
CENTRAL SERVICE AREA — FORTH WORTH, TX

MALSR
REPLACEMENT RUNWAY 18

TYPICAL LIGHT STATION LAYOUTS AND PAVEMENT SECTIONS

HOUMA — HOUMA-TERREBONNE AIRPORT — LA

REVIEWED BY	SUBMITTED BY	APPROVED BY
	SUBMITTER'S TITLE	APPROVER'S TITLE
DESIGNED BY W. KING	ISSUED BY	DATE 07-16-25 JCN: 22001835
DRAWN BY W. KING	ENGINEERING SERVICES NAVAIDS	DRAWING NO. HUM-D-MALSR-CS501 REV.
CHECKED BY C. WULFF		

HOUMA-TERRABONNE AIRPORT
HOUMA, LOUISIANA

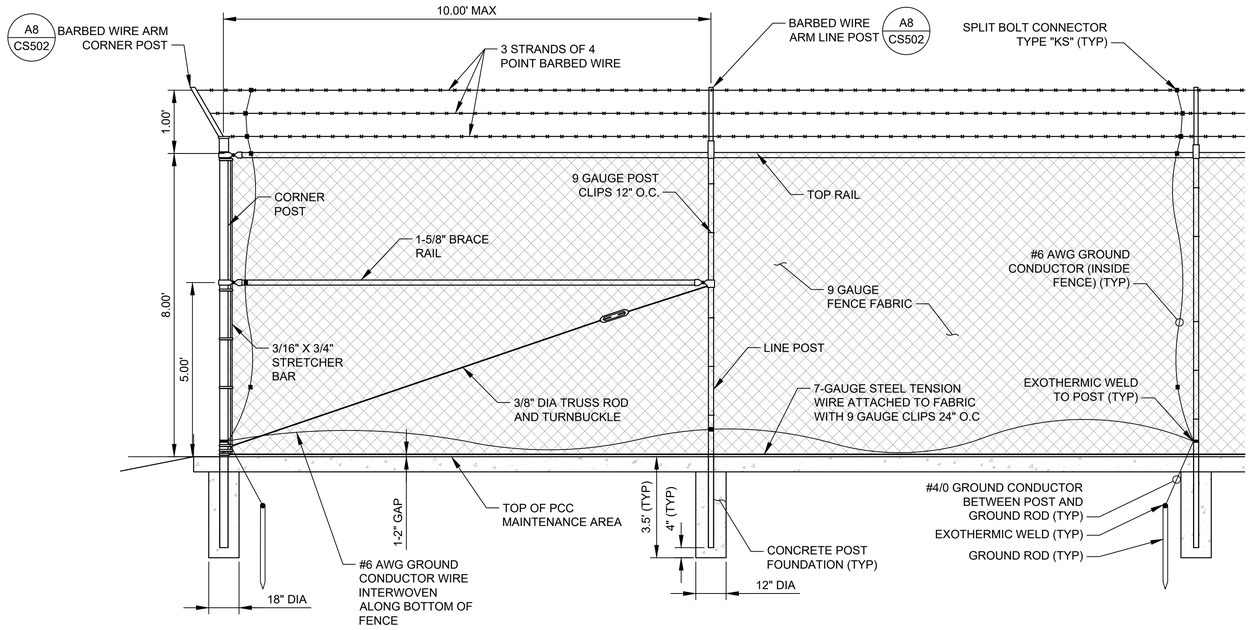

NOTE:

1. ALL BRACE RAILS, TRUSS RODS, AND ALL OTHER HARDWARE SHALL BE MOUNTED ON THE SECURE SIDE OF THE FENCE FABRIC.
2. GROUND CONDUCTORS AND GROUND RODS SHALL BE PROVIDED AT EACH CORNER POST.

D8 / CS501 FENCE
NTS

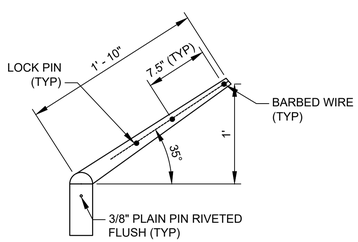

CORNER POST

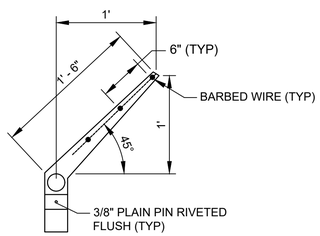

LINE POST

A8 / CS502 BARBED WIRE SUPPORT ARM
NTS

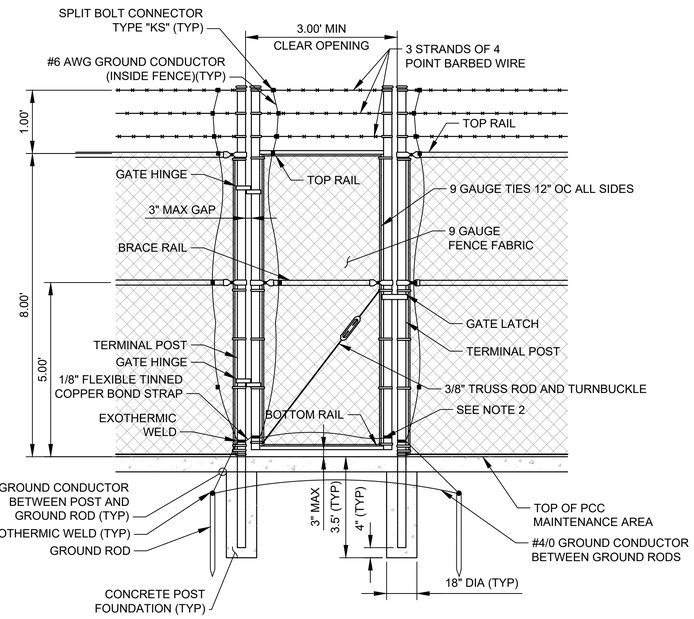

NOTE:

1. ALL BRACE RAILS, TRUSS RODS, AND ALL OTHER HARDWARE SHALL BE MOUNTED ON THE SECURE SIDE OF THE FENCE FABRIC.
2. 6 AWG BARE STRANDED TINNED COPPER CONDUCTOR THREADED CONTINUOUSLY THROUGH THE GATE FABRIC AND MECHANICALLY BONDED TO THE GATE VERTICAL SUPPORT RAILS

D3 / CS501 3.0' PERSONNEL GATE
NTS

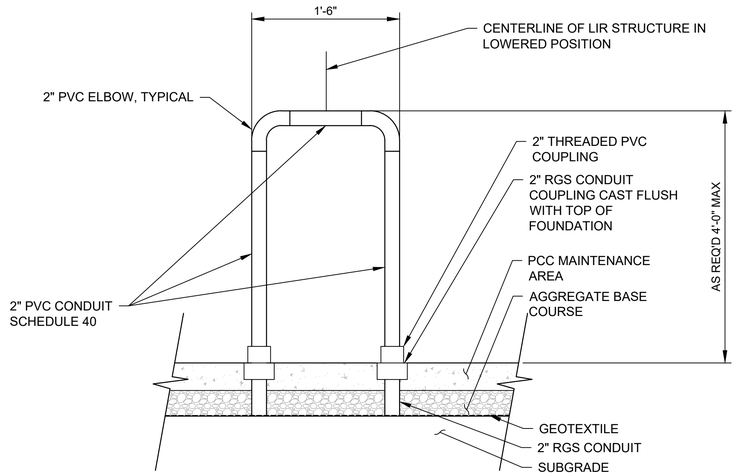

NOTE:

1. POSITION AT 3/4 OF SUPPORT HEIGHT UNLESS OTHERWISE DIRECTED BY RPR

A6 / CS502 MAINTENANCE STAND DETAIL (REMOVABLE)
SCALE: NTS

FOR OFFICIAL USE ONLY
PUBLIC AVAILABILITY TO BE DETERMINED UNDER 5 USC 552

COMMONWEALTH OF PENNSYLVANIA
REGISTERED PROFESSIONAL ENGINEER
CHRISTOPHER STEVEN WULFF
No. PE078766
7/16/25

JACOBS
1100 N GLEBE RD.
SUITE 500
ARLINGTON, VA 22201

REV.	APPROVED DATE	DESCRIPTION	JCN	REDLINE DATE	APVD

Jacobs

DEPARTMENT OF TRANSPORTATION
FEDERAL AVIATION ADMINISTRATION
CENTRAL SERVICE AREA — FORTH WORTH, TX

MALSR
REPLACEMENT RUNWAY 18

FENCING DETAILS

HOUMA — HOUMA-TERREBONNE AIRPORT — LA

HOUMA-TERRABONNE AIRPORT
HOUMA, LOUISIANA

REVIEWED BY	SUBMITTED BY		APPROVED BY
	SUBMITTER'S TITLE		APPROVER'S TITLE
	DESIGNED BY	W. KING	ISSUED BY: ENGINEERING SERVICES NAVAIDS
	DRAWN BY	W. KING	DATE 07-16-25 JCN: 22001835
	CHECKED BY	C. WULFF	DRAWING NO. HUM-D-MALSR-CS502 REV.

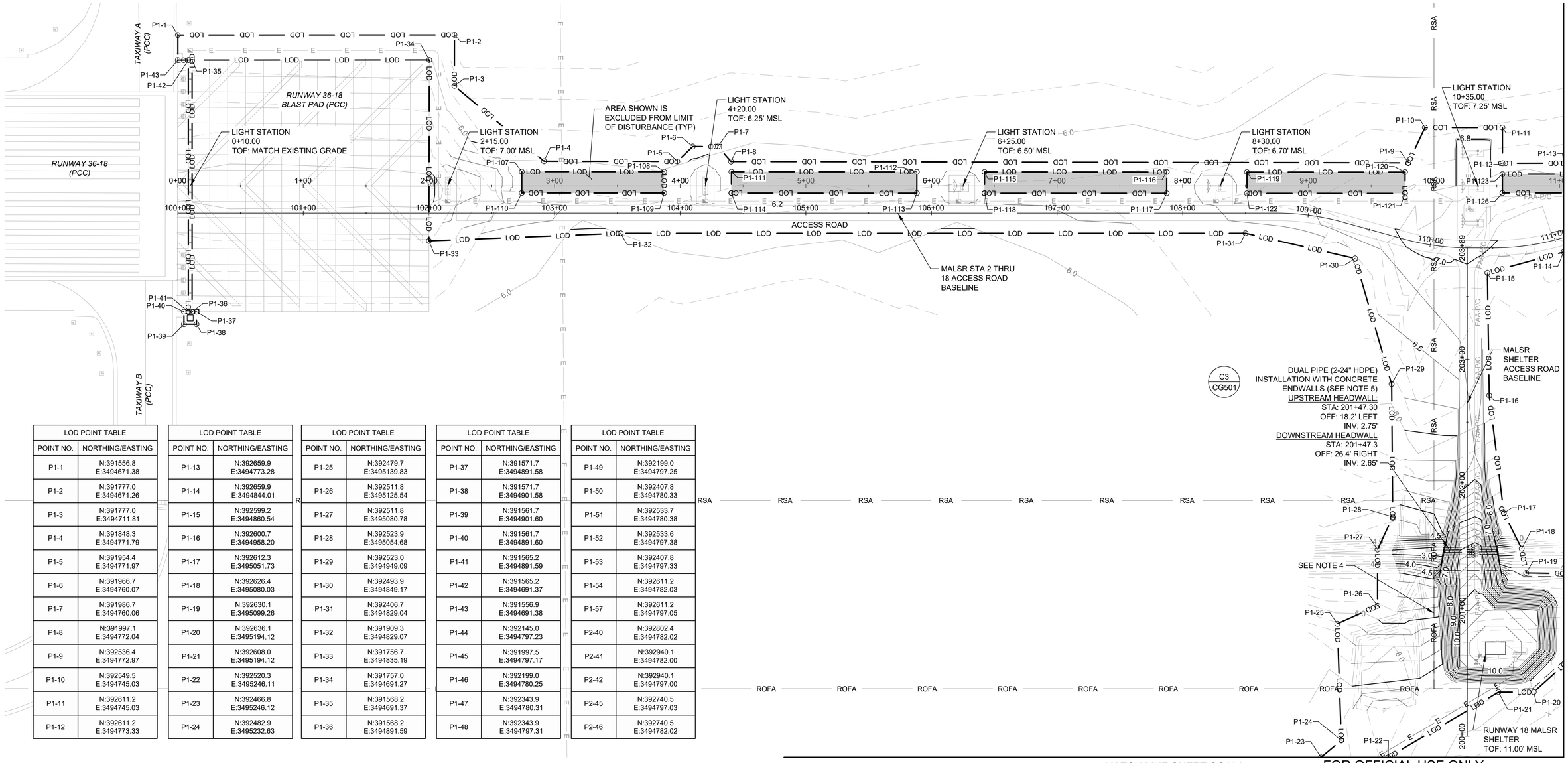

LOD POINT TABLE	
POINT NO.	NORTHING/EASTING
P1-1	N:391556.8 E:3494671.38
P1-2	N:391777.0 E:3494671.26
P1-3	N:391777.0 E:3494711.81
P1-4	N:391848.3 E:3494771.79
P1-5	N:391954.4 E:3494771.97
P1-6	N:391966.7 E:3494760.07
P1-7	N:391986.7 E:3494760.06
P1-8	N:391997.1 E:3494772.04
P1-9	N:392536.4 E:3494772.97
P1-10	N:392549.5 E:3494745.03
P1-11	N:392611.2 E:3494745.03
P1-12	N:392611.2 E:3494773.33

LOD POINT TABLE	
POINT NO.	NORTHING/EASTING
P1-13	N:392659.9 E:3494773.28
P1-14	N:392659.9 E:3494844.01
P1-15	N:392599.2 E:3494860.54
P1-16	N:392600.7 E:3494958.20
P1-17	N:392612.3 E:3495051.73
P1-18	N:392626.4 E:3495080.03
P1-19	N:392630.1 E:3495099.26
P1-20	N:392636.1 E:3495194.12
P1-21	N:392608.0 E:3495194.12
P1-22	N:392520.3 E:3495246.11
P1-23	N:392466.8 E:3495246.12
P1-24	N:392482.9 E:3495232.63

LOD POINT TABLE	
POINT NO.	NORTHING/EASTING
P1-25	N:392479.7 E:3495139.83
P1-26	N:392511.8 E:3495125.54
P1-27	N:392511.8 E:3495080.78
P1-28	N:392523.9 E:3495054.68
P1-29	N:392523.0 E:3494949.09
P1-30	N:392493.9 E:3494849.17
P1-31	N:392406.7 E:3494829.04
P1-32	N:391909.3 E:3494829.07
P1-33	N:391756.7 E:3494835.19
P1-34	N:391757.0 E:3494691.27
P1-35	N:391568.2 E:3494691.37
P1-36	N:391568.2 E:3494891.59

LOD POINT TABLE	
POINT NO.	NORTHING/EASTING
P1-37	N:391571.7 E:3494891.58
P1-38	N:391571.7 E:3494901.58
P1-39	N:391561.7 E:3494901.60
P1-40	N:391561.7 E:3494891.60
P1-41	N:391565.2 E:3494891.59
P1-42	N:391565.2 E:3494691.37
P1-43	N:391556.9 E:3494691.38
P1-44	N:392145.0 E:3494797.23
P1-45	N:391997.5 E:3494797.17
P1-46	N:392199.0 E:3494780.25
P1-47	N:392343.9 E:3494780.31
P1-48	N:392343.9 E:3494797.31

LOD POINT TABLE	
POINT NO.	NORTHING/EASTING
P1-49	N:392199.0 E:3494797.25
P1-50	N:392407.8 E:3494780.33
P1-51	N:392533.7 E:3494780.38
P1-52	N:392533.6 E:3494797.38
P1-53	N:392407.8 E:3494797.33
P1-54	N:392611.2 E:3494782.03
P1-57	N:392611.2 E:3494797.05
P2-40	N:392802.4 E:3494782.02
P2-41	N:392940.1 E:3494782.00
P2-42	N:392940.1 E:3494797.00
P2-45	N:392740.5 E:3494797.03
P2-46	N:392740.5 E:3494782.02

NOTES

1. HEADWALLS SHALL BE IN ACCORDANCE WITH LA DOTD STANDARD DETAILS FOR THE SIZE OF PIPE INDICATED ON PLAN. THE LA DOTD STANDARD DETAILS CAN BE FOUND AT WWWSP.DOTD.LA.GOV.
2. ALL SLOPES BETWEEN RUNWAY 18 MALSR BASELINE STATIONS 0+00 AND 10+00 ARE LIMITED TO 5.0% MAX. SLOPES BEYOND RUNWAY 18 MALSR BASELINE STATION 10+00 ARE LIMITED TO 4H:1V MAX.
3. ALL DISTURBED AREAS SHALL BE HYDROSEEDED WITH PENSACOLA BAHIA GRASS AND COMPACTED IN ACCORDANCE WITH PROJECT SPECIFICATIONS
4. FOLLOWING THE PLACEMENT, THE CONTRACTOR SHALL INSTALL SETTLEMENT MONITORING POINTS AND MONITOR THE SETTLEMENT. THE EQUIPMENT SHELTER, EQUIPMENT RACKS, ACCESS ROADWAYS, AND ALL OTHER INFRASTRUCTURE SHALL NOT BE INSTALLED UNTIL THE SETTLEMENT READINGS ARE ACCEPTABLE. IT IS ANTICIPATED THE SETTLEMENT WILL TAKE APPROXIMATELY 6 MONTHS TO ACHIEVE.
5. LOCATION OF STATION AND OFFSET IS THE MID POINT BETWEEN THE DUAL PIPES, INVERT INFORMATION PROVIDED IS APPLICABLE TO EACH PIPE.
6. NO EARTH DISTURBANCE SHALL OCCUR UNTIL ADEQUATE EROSION AND SEDIMENTATION CONTROLS ARE IN PLACE AND ACCEPTED. THE CONTRACTOR SHALL DEVELOP THE EROSION AND SEDIMENTATION CONTROL PLAN.

LEGEND

- 10.0 — MAJOR CONTOUR (1.0' INTERVAL)
- MINOR CONTOUR (0.25' INTERVAL)
- 10.0 — EXISTING MAJOR CONTOUR (1.0' INTERVAL)
- EXISTING MINOR CONTOUR (0.25' INTERVAL)
- ST — STORM PIPE (SIZE AND TYPE INDICATED)
- LOD — LIMIT OF DISTURBANCE

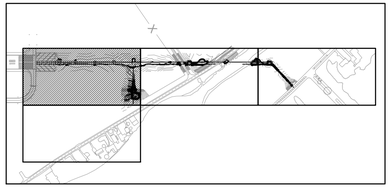

KEY MAP

SCALE: 1 INCH = 40 FEET

COMMONWEALTH OF PENNSYLVANIA REGISTERED PROFESSIONAL CHRISTOPHER STEVEN WULFF ENGINEER No. PE078766

7/16/25

FOR OFFICIAL USE ONLY
PUBLIC AVAILABILITY TO BE DETERMINED UNDER 5 USC 552

JACOBS
1100 N GLEBE RD.
SUITE 500
ARLINGTON, VA 22201

REV.	APPROVED DATE	DESCRIPTION	JCN	REDLINE DATE	APVD

Jacobs

DEPARTMENT OF TRANSPORTATION
FEDERAL AVIATION ADMINISTRATION
CENTRAL SERVICE AREA — FORTH WORTH, TX

MALSR REPLACEMENT RUNWAY 18

GRADING AND DRAINAGE PLAN

HOUMA — HOUMA-TERREBONNE AIRPORT — LA

HOUMA-TERRABONNE AIRPORT
HOUMA, LOUISIANA

REVIEWED BY	SUBMITTED BY		APPROVED BY
	SUBMITTER'S TITLE		APPROVER'S TITLE
	DESIGNED BY W. KING	ISSUED BY ENGINEERING SERVICES NAVAIDS	DATE 07-16-25 JCN: 22001835
	DRAWN BY W. KING		DRAWING NO. HUM-D-MALSR-CG101 REV.
	CHECKED BY C. WULFF		

MATCH LINE SEE INSET A

MATCH LINE SHEET CG101

MATCH LINE SHEET CG103

AREA SHOWN IS EXCLUDED FROM LIMIT OF DISTURBANCE (TYP)

LIGHT STATION 12+27.00 TOF: 7.50' MSL

LIGHT STATION 14+19.00 TOF: 7.00' MSL

LIGHT STATION 16+11.00 TOF: 5.75' MSL

LIGHT STATION 18+01.00 TOF: 5.25' MSL

LIGHT STATION 20+06.00 TOF: 5.60' MSL

LIGHT STATION 22+90.00 TOF: 5.60' MSL

AVIATION ROAD

STATE ROUTE 24

RUNWAY 18 MALSR BASELINE

ACCESS ROAD

MALSR STA 22 AND 24 ACCESS ROAD BASELINE

MALSR STA 2 THRU 18 ACCESS ROAD BASELINE

BAYOU TERREBONNE

AOA FENCE

MATCH EXISTING GRADE

24" X 36" BOX CULVERT WITH CONCRETE ENDWALLS (SEE NOTE 4)
UPSTREAM HEADWALL
STA: 115+07.10
OFF: 19.00' LEFT
INV: -1.26'
DOWNSTREAM HEADWALL
STA: 115+29.9
OFF: 13+75 RIGHT
INV: -1.35'

SINGLE PIPE (1-36" HDPE) INSTALLATION WITH CONCRETE ENDWALLS (SEE NOTE 4)
UPSTREAM HEADWALL
STA: 115+94.60
OFF: 22.72' LEFT
INV: -2.01'
DOWNSTREAM HEADWALL
STA: 116+20.20
OFF: 9.45' RIGHT
INV: -2.11'

WALL 1
NORTHING: 393375.96
EASTING: 3494794.01
TOP OF WALL: 3.20'
BOTTOM OF WALL: 3.00'

WALL 1
NORTHING: 393367.18
EASTING: 3494798.99
TOP OF WALL: 5.59'
BOTTOM OF WALL: 3.00'

WALL 1
NORTHING: 393331.93
EASTING: 3494819.07
TOP OF WALL: 5.25'
BOTTOM OF WALL: 3.00'

WALL 1
NORTHING: 393315.42
EASTING: 3494828.34
TOP OF WALL: 3.00'
BOTTOM OF WALL: 3.00'

WALL 2
NORTHING: 393850.69
EASTING: 3494771.68
TOP OF WALL: 2.00'
BOTTOM OF WALL: 2.00'

WALL 2
NORTHING: 393837.18
EASTING: 3494784.96
TOP OF WALL: 5.44'
BOTTOM OF WALL: 2.00'

WALL 2
NORTHING: 393823.92
EASTING: 3494797.95
TOP OF WALL: 2.00'
BOTTOM OF WALL: 2.00'

F5 CG501

F3 CG501

LOD POINT TABLE	
POINT NO.	NORTHING/EASTING
P2-1	N:392708.3 E:3494773.22
P2-2	N:392708.2 E:3494607.13
P2-3	N:392892.6 E:3494607.12
P2-4	N:393013.9 E:3494779.59
P2-5	N:393039.8 E:3494800.03
P2-6	N:393066.9 E:3494780.66
P2-7	N:393105.0 E:3494799.08
P2-8	N:393155.6 E:3494770.00
P2-9	N:393197.0 E:3494770.09
P2-10	N:393216.8 E:3494777.37
P2-11	N:393257.2 E:3494776.57
P2-12	N:393283.9 E:3494751.97

LOD POINT TABLE	
POINT NO.	NORTHING/EASTING
P2-13	N:393318.2 E:3494746.51
P2-14	N:393365.7 E:3494767.97
P2-15	N:393479.6 E:3494689.73
P2-16	N:393485.2 E:3494697.99
P2-17	N:393382.0 E:3494768.91
P2-18	N:393382.3 E:3494797.28
P2-19	N:393317.7 E:3494833.99
P2-20	N:393158.4 E:3494834.00
P2-21	N:393137.9 E:3494847.46
P2-22	N:393095.3 E:3494822.46
P2-23	N:393068.5 E:3494841.03
P2-24	N:393056.4 E:3494823.83

LOD POINT TABLE	
POINT NO.	NORTHING/EASTING
P2-25	N:392733.1 E:3494824.05
P2-26	N:393525.9 E:3494792.42
P2-27	N:393576.9 E:3494756.24
P2-28	N:393598.3 E:3494786.41
P2-29	N:393547.4 E:3494822.59
P2-30	N:393638.8 E:3494947.43
P2-31	N:393822.2 E:3494809.84
P2-32	N:393822.2 E:3494797.55
P2-33	N:393877.1 E:3494742.17
P2-34	N:393891.0 E:3494742.27
P2-35	N:393900.7 E:3494748.58
P2-36	N:393900.7 E:3494829.58

LOD POINT TABLE	
POINT NO.	NORTHING/EASTING
P2-37	N:393846.7 E:3494833.96
P2-38	N:393806.7 E:3494833.97
P2-39	N:393644.4 E:3494955.70
P2-40	N:392802.4 E:3494782.02
P2-41	N:392940.1 E:3494782.00
P2-42	N:392940.1 E:3494797.00
P2-43	N:392802.4 E:3494797.02
P2-45	N:392740.5 E:3494797.03
P2-46	N:392740.5 E:3494782.02
P2-47	N:392664.2 E:3495099.74
P2-48	N:392664.2 E:3495168.92

NOTES

1. HEADWALLS SHALL BE IN ACCORDANCE WITH LA DOTD STANDARD DETAILS FOR THE SIZE OF PIPE INDICATED ON PLAN. THE LA DOTD STANDARD DETAILS CAN BE FOUND AT WWWSP.DOTD.LA.GOV.
2. ALL SLOPES BETWEEN RUNWAY 18 MALSR BASELINE STATIONS 0+00 AND 10+00 ARE LIMITED TO 5.0% MAX. SLOPES BEYOND RUNWAY 18 MALSR BASELINE STATION 10+00 ARE LIMITED TO 4H:1V MAX.
3. ALL DISTURBED AREAS SHALL BE HYDROSEEDED WITH PENSACOLA BAHIA GRASS AND COMPACTED IN ACCORDANCE WITH PROJECT SPECIFICATIONS.
4. LOCATION OF PIPE SHALL BE INLINE WITH EXISTING DRAINAGE CHANNEL AND MAINTAIN EXISTING FLOW PATTERNS.
5. NO EARTH DISTURBANCE SHALL OCCUR UNTIL ADEQUATE EROSION AND SEDIMENTATION CONTROLS ARE IN PLACE AND ACCEPTED. THE CONTRACTOR SHALL DEVELOP THE EROSION AND SEDIMENTATION CONTROL PLAN.

LEGEND

- 10.0 — MAJOR CONTOUR (1.0' INTERVAL)
- MINOR CONTOUR (0.25' INTERVAL)
- 10.0 — EXISTING MAJOR CONTOUR (1.0' INTERVAL)
- EXISTING MINOR CONTOUR (0.25' INTERVAL)
- ST — STORM PIPE (SIZE AND TYPE INDICATED)
- LOD — LIMIT OF DISTURBANCE

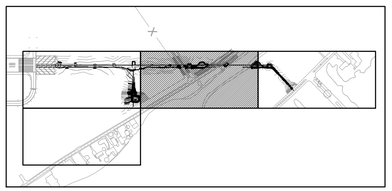

KEY MAP

N

0 20 40 80

SCALE: 1 INCH = 40 FEET

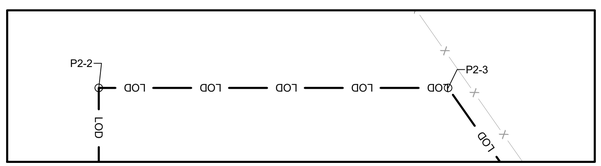

INSET A

FOR OFFICIAL USE ONLY
PUBLIC AVAILABILITY TO BE DETERMINED UNDER 5 USC 552

COMMONWEALTH OF PENNSYLVANIA
REGISTERED PROFESSIONAL
CHRISTOPHER STEVEN WULFF
ENGINEER
No. PE078766
7/16/25

JACOBS
1100 N GLEBE RD.
SUITE 500
ARLINGTON, VA 22201

REV.	APPROVED DATE	DESCRIPTION	JCN	REDLINE DATE	APVD

Jacobs

HOUMA-TERRABONNE AIRPORT
HOUMA, LOUISIANA

DEPARTMENT OF TRANSPORTATION
FEDERAL AVIATION ADMINISTRATION
CENTRAL SERVICE AREA FORTH WORTH, TX

MALSR
REPLACEMENT RUNWAY 18

GRADING AND DRAINAGE PLAN

HOUMA HOUMA-TERREBONNE AIRPORT LA

REVIEWED BY	SUBMITTED BY		APPROVED BY
	SUBMITTER'S TITLE		APPROVER'S TITLE
	DESIGNED BY W. KING	ISSUED BY ENGINEERING SERVICES NAVAIDS	DATE 07-16-25 JCN: 22001835
	DRAWN BY W. KING		DRAWING NO. HUM-D-MALSR-CG102 REV.
	CHECKED BY C. WULFF		

LOD POINT TABLE	
POINT NO.	NORTHING/EASTING
P3-1	N:393938.6 E:3494772.96
P3-2	N:394033.8 E:3494772.95
P3-3	N:394264.1 E:3495020.88
P3-4	N:394281.1 E:3495021.53
P3-5	N:394285.9 E:3495026.71
P3-6	N:394246.1 E:3495065.54
P3-7	N:394241.4 E:3495060.29
P3-8	N:394241.6 E:3495040.74
P3-9	N:394058.1 E:3494842.71
P3-10	N:394028.1 E:3494828.95

NOTES

1. HEADWALLS SHALL BE IN ACCORDANCE WITH LA DOTD STANDARD DETAILS FOR THE SIZE OF PIPE INDICATED ON PLAN. THE LA DOTD STANDARD DETAILS CAN BE FOUND AT WWWSP.DOTD.LA.GOV.
2. ALL SLOPES BETWEEN RUNWAY 18 MALSR BASELINE STATIONS 0+00 AND 10+00 ARE LIMITED TO 5.0% MAX. SLOPES BEYOND RUNWAY 18 MALSR BASELINE STATION 10+00 ARE LIMITED TO 4H:1V MAX.
3. ALL DISTURBED AREAS SHALL BE HYDROSEEDED WITH PENSACOLA BAHIA GRASS AND COMPACTED IN ACCORDANCE WITH PROJECT SPECIFICATIONS.
4. NO EARTH DISTURBANCE SHALL OCCUR UNTIL ADEQUATE EROSION AND SEDIMENTATION CONTROLS ARE IN PLACE AND ACCEPTED. THE CONTRACTOR SHALL DEVELOP THE EROSION AND SEDIMENTATION CONTROL PLAN.

LEGEND

10.0	MAJOR CONTOUR (1.0' INTERVAL)
	MINOR CONTOUR (0.25' INTERVAL)
10.0	EXISTING MAJOR CONTOUR (1.0' INTERVAL)
	EXISTING MINOR CONTOUR (0.25' INTERVAL)
ST	STORM PIPE (SIZE AND TYPE INDICATED)
LOD	LIMIT OF DISTURBANCE

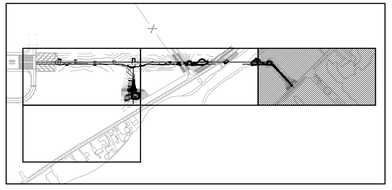

KEY MAP

0 20 40 80
SCALE: 1 INCH = 40 FEET

COMMONWEALTH OF PENNSYLVANIA
REGISTERED PROFESSIONAL
CHRISTOPHER STEVEN WULFF
ENGINEER
No. PE078766
7/16/25

FOR OFFICIAL USE ONLY
PUBLIC AVAILABILITY TO BE DETERMINED UNDER 5 USC 552

JACOBS
1100 N GLEBE RD.
SUITE 500
ARLINGTON, VA 22201

REV.	APPROVED DATE	DESCRIPTION	JCN	REDLINE DATE	APVD

DEPARTMENT OF TRANSPORTATION
FEDERAL AVIATION ADMINISTRATION
CENTRAL SERVICE AREA — FORTH WORTH, TX

Jacobs

MALSR
REPLACEMENT RUNWAY 18

GRADING AND DRAINAGE PLAN

HOUMA — HOUMA-TERREBONNE AIRPORT — LA

HOUMA-TERRABONNE AIRPORT
HOUMA, LOUISIANA

REVIEWED BY	SUBMITTED BY		APPROVED BY
	SUBMITTER'S TITLE		APPROVER'S TITLE
	DESIGNED BY W. KING	ISSUED BY	DATE 07-16-25 JCN: 22001835
	DRAWN BY W. KING	ENGINEERING SERVICES NAVAIDS	DRAWING NO. HUM-D-MALSR-CG103 REV.
	CHECKED BY C. WULFF		

MATCH LINE SHEET CG101

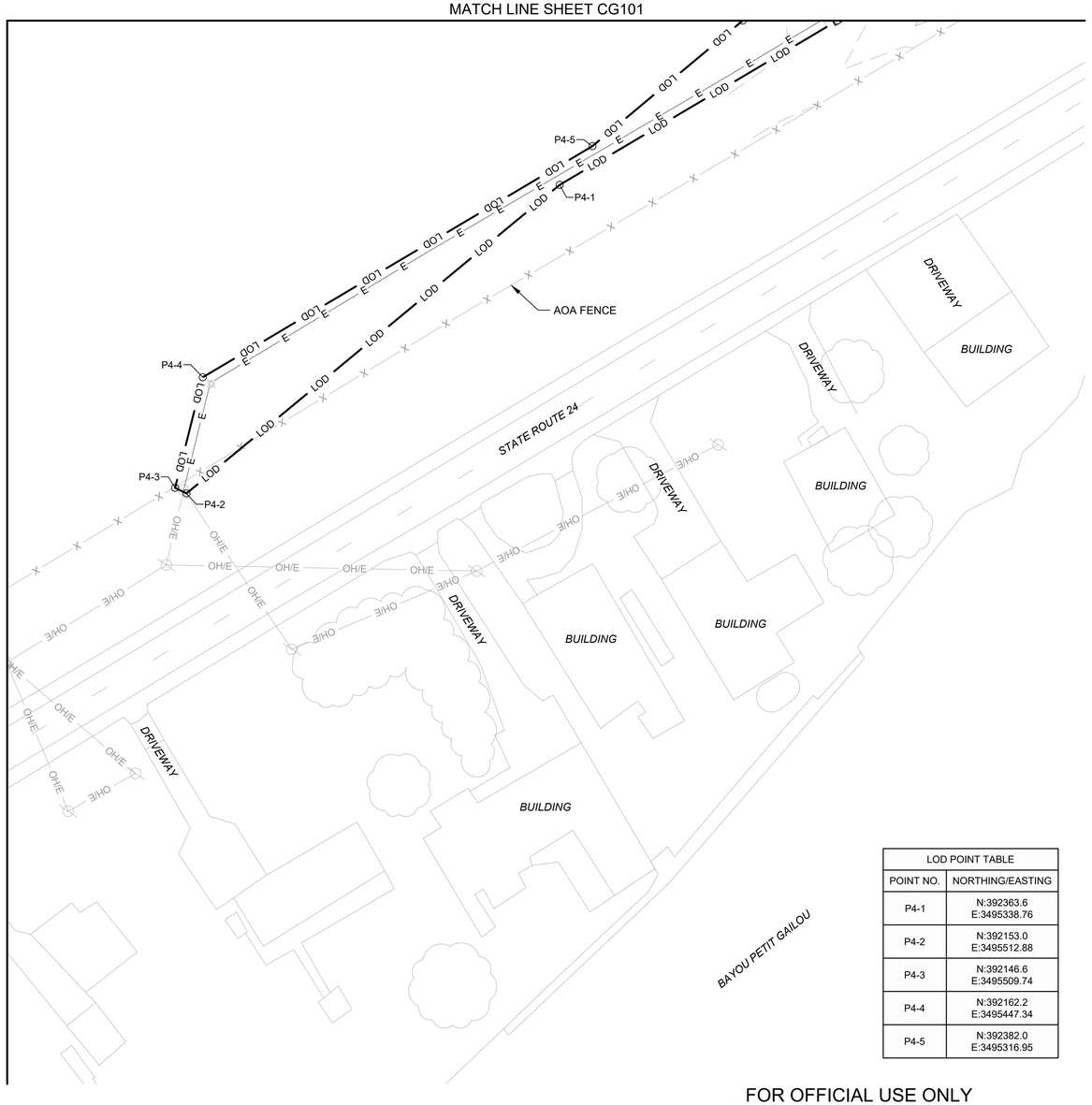

LOD POINT TABLE	
POINT NO.	NORTHING/EASTING
P4-1	N:392363.6 E:3495338.76
P4-2	N:392153.0 E:3495512.88
P4-3	N:392146.6 E:3495509.74
P4-4	N:392162.2 E:3495447.34
P4-5	N:392382.0 E:3495316.95

NOTES

1. HEADWALLS SHALL BE IN ACCORDANCE WITH LA DOTD STANDARD DETAILS FOR THE SIZE OF PIPE INDICATED ON PLAN. THE LA DOTD STANDARD DETAILS CAN BE FOUND AT WWWSP.DOTD.LA.GOV.
2. ALL SLOPES BETWEEN RUNWAY 18 MALSR BASELINE STATIONS 0+00 AND 10+00 ARE LIMITED TO 5.0% MAX. SLOPES BEYOND RUNWAY 18 MALSR BASELINE STATION 10+00 ARE LIMITED TO 4H:1V MAX.
3. ALL DISTURBED AREAS SHALL BE HYDROSEEDED WITH PENSACOLA BAHIA GRASS AND COMPACTED IN ACCORDANCE WITH PROJECT SPECIFICATIONS.
4. FOLLOWING THE COMPLETION OF THE PROJECT THE CONTRACTOR SHALL RESTORE THE CONSTRUCTION STAGING AREA TO THE SAME OR BETTER CONDITION AS IT EXIST PRIOR TO MOBILIZATION.
5. NO EARTH DISTURBANCE SHALL OCCUR UNTIL ADEQUATE EROSION AND SEDIMENTATION CONTROLS ARE IN PLACE AND ACCEPTED. THE CONTRACTOR SHALL DEVELOP THE EROSION AND SEDIMENTATION CONTROL PLAN.

LEGEND

10.0	MAJOR CONTOUR (1.0' INTERVAL
	MINOR CONTOUR (0.25' INTERVAL)
10.0	EXISTING MAJOR CONTOUR (1.0' INTERVAL)
	EXISTING MINOR CONTOUR (0.25' INTERVAL)
ST	STORM PIPE (SIZE AND TYPE INDICATED)
LOD	LIMIT OF DISTURBANCE

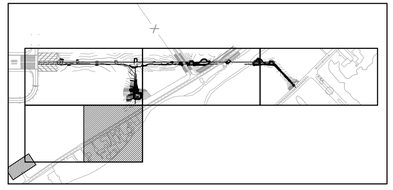

KEY MAP

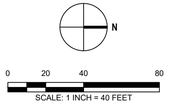

SCALE: 1 INCH = 40 FEET

COMMONWEALTH OF PENNSYLVANIA
REGISTERED PROFESSIONAL ENGINEER
CHRISTOPHER STEVEN WULFF
No. PE078766
7/16/25

FOR OFFICIAL USE ONLY
PUBLIC AVAILABILITY TO BE DETERMINED UNDER 5 USC 552

JACOBS
1100 N GLEBE RD.
SUITE 500
ARLINGTON, VA 22201

REV.	APPROVED DATE	DESCRIPTION	JCN	REDLINE DATE	APVD

DEPARTMENT OF TRANSPORTATION
FEDERAL AVIATION ADMINISTRATION
CENTRAL SERVICE AREA — FORTH WORTH, TX

Jacobs

MALSR
REPLACEMENT RUNWAY 18

GRADING AND DRAINAGE PLAN

HOUMA — HOUMA-TERREBONNE AIRPORT — LA

HOUMA-TERRABONNE AIRPORT
HOUMA, LOUISIANA

REVIEWED BY	SUBMITTED BY		APPROVED BY
	SUBMITTER'S TITLE		APPROVER'S TITLE
	DESIGNED BY W. KING	ISSUED BY ENGINEERING SERVICES NAVAIDS	DATE 07-16-25 JCN: 22001835
	DRAWN BY W. KING		DRAWING NO. HUM-D-MALSR-CG104 REV.
	CHECKED BY C. WULFF		

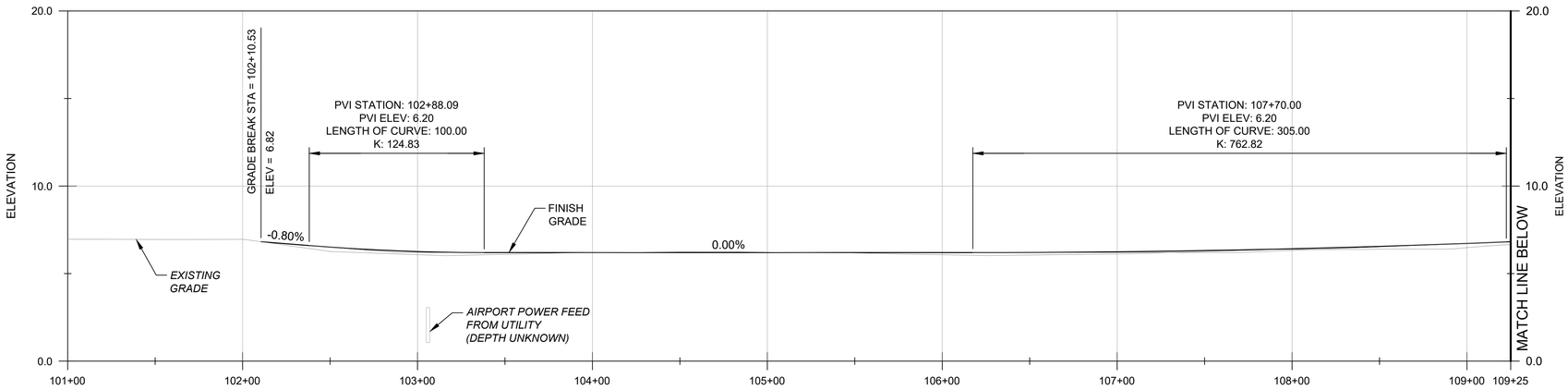

MALSR STA 2 THRU 18 ACCESS ROAD

HOR SCALE: 1" = 40'
VER SCALE: 1" = 10'

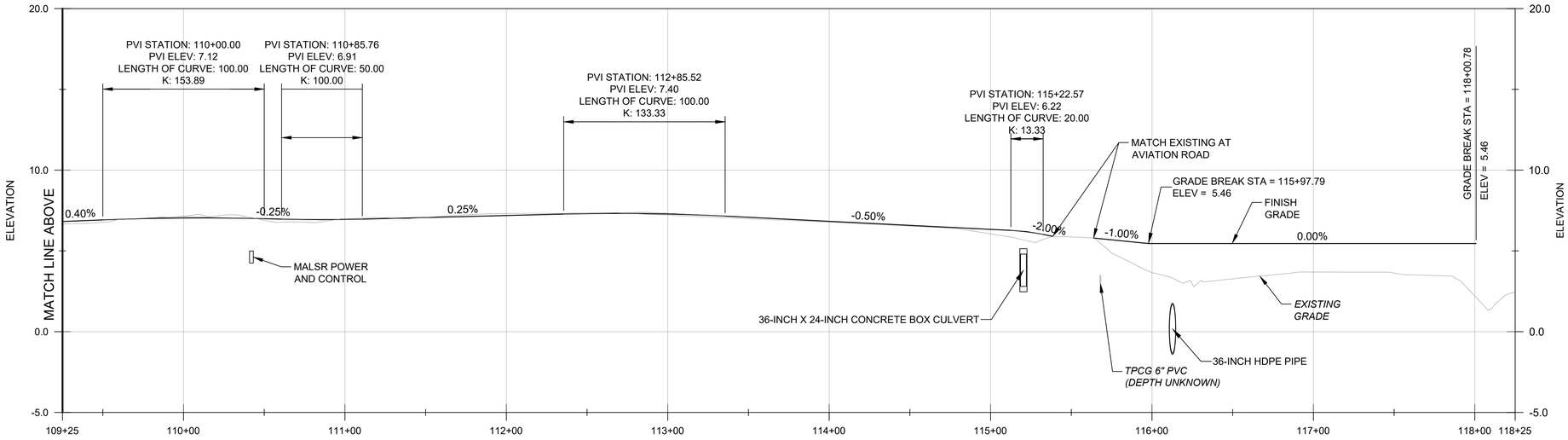

MALSR STA 2 THRU 18 ACCESS ROAD

HOR SCALE: 1" = 40'
VER SCALE: 1" = 10'

FOR OFFICIAL USE ONLY
PUBLIC AVAILABILITY TO BE DETERMINED UNDER 5 USC 552

COMMONWEALTH OF PENNSYLVANIA
REGISTERED PROFESSIONAL
CHRISTOPHER STEVEN WULFF
ENGINEER
No. PE078766
7/16/25

JACOBS
1100 N GLEBE RD.
SUITE 500
ARLINGTON, VA 22201

REV.	APPROVED DATE	DESCRIPTION	JCN	REDLINE DATE	APVD

DEPARTMENT OF TRANSPORTATION
FEDERAL AVIATION ADMINISTRATION
CENTRAL SERVICE AREA — FORTH WORTH, TX

Jacobs

MALSR
REPLACEMENT RUNWAY 18

MALSR STA 2 THRU 18
ACCESS ROADWAY PROFILES

HOUMA — HOUMA-TERREBONNE AIRPORT — LA

HOUMA-TERRABONNE AIRPORT
HOUMA, LOUISIANA

REVIEWED BY	SUBMITTED BY		APPROVED BY
	SUBMITTER'S TITLE		APPROVER'S TITLE
DESIGNED BY	W. KING	ISSUED BY: ENGINEERING SERVICES NAVAIDS	DATE 07-16-25 JCN: 22001835
DRAWN BY	W. KING		DRAWING NO. HUM-D-MALSR-CG201 REV.
CHECKED BY	C. WULFF		

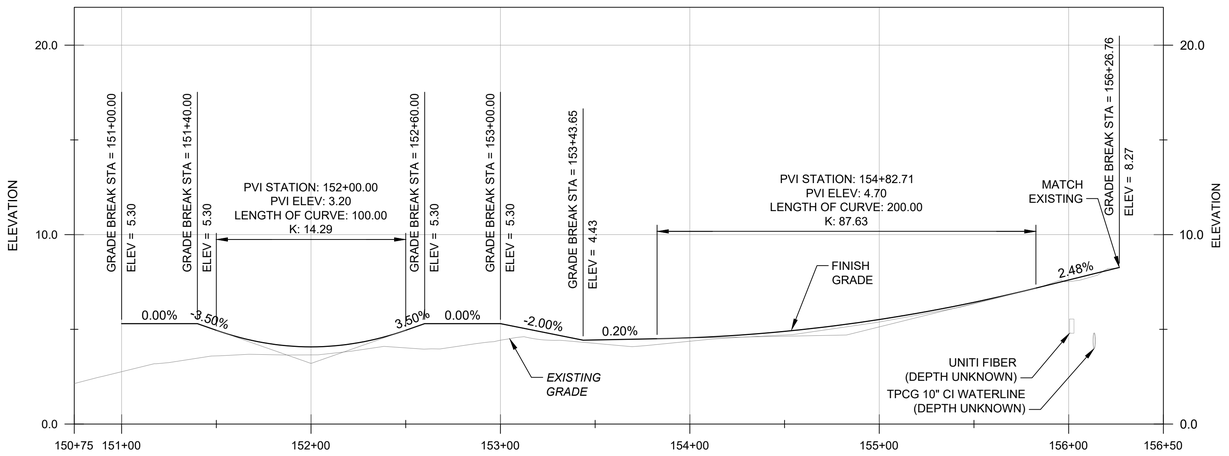

MALSR STA 22 AND 24 ACCESS ROAD

HOR SCALE: 1" = 40'
VER SCALE: 1" = 10'

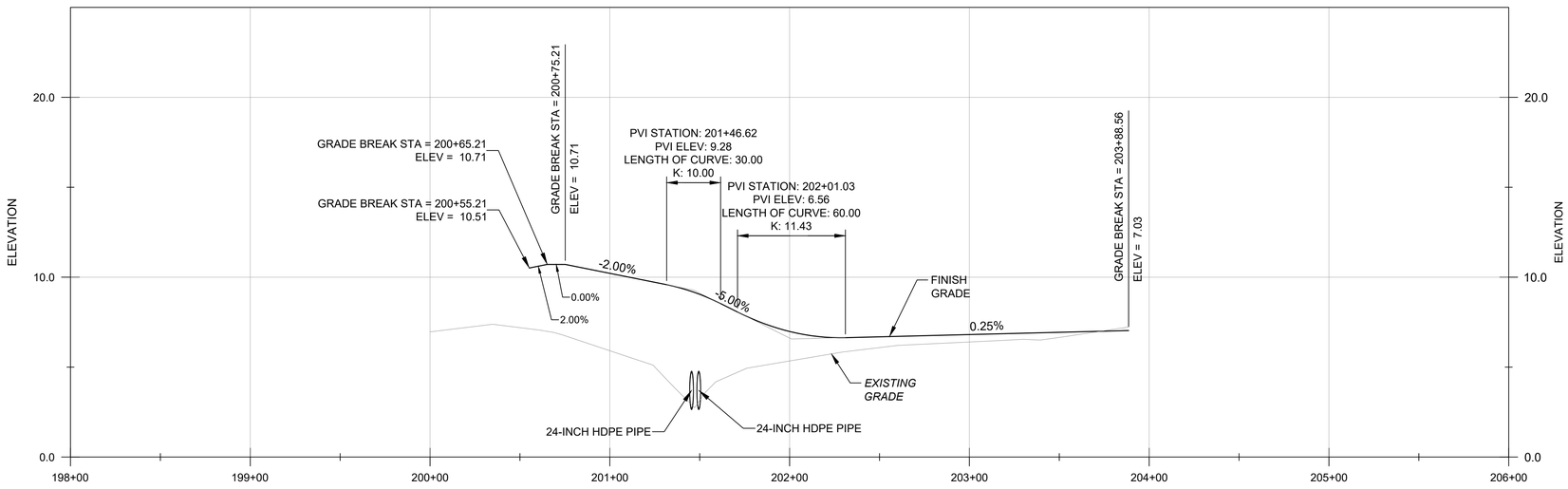

MALSR SHELTER ACCESS ROAD

HOR SCALE: 1" = 40'
VER SCALE: 1" = 10'

FOR OFFICIAL USE ONLY
PUBLIC AVAILABILITY TO BE DETERMINED UNDER 5 USC 552

COMMONWEALTH OF PENNSYLVANIA
REGISTERED PROFESSIONAL
CHRISTOPHER STEVEN WULFF
ENGINEER
No. PE078768
7/16/25

JACOBS
1100 N GLEBE RD.
SUITE 500
ARLINGTON, VA 22201

REV.	APPROVED DATE	DESCRIPTION	JCN	REDLINE DATE	APVD

DEPARTMENT OF TRANSPORTATION
FEDERAL AVIATION ADMINISTRATION
CENTRAL SERVICE AREA — FORTH WORTH, TX

MALSR
REPLACEMENT RUNWAY 18

MALSR STA 22 AND 24 ACCESS ROAD AND
MALSR SHETLER ACCESS ROADWAY PROFILES

HOUMA — HOUMA-TERREBONNE AIRPORT — LA

REVIEWED BY	SUBMITTED BY	APPROVED BY
	SUBMITTER'S TITLE	APPROVER'S TITLE
	DESIGNED BY W. KING	ISSUED BY: ENGINEERING SERVICES NAVAIDS
	DRAWN BY W. KING	DATE 07-16-25 JCN: 22001835
	CHECKED BY C. WULFF	DRAWING NO. HUM-D-MALSR-CG202 REV.

HOUMA-TERRABONNE AIRPORT
HOUMA, LOUISIANA

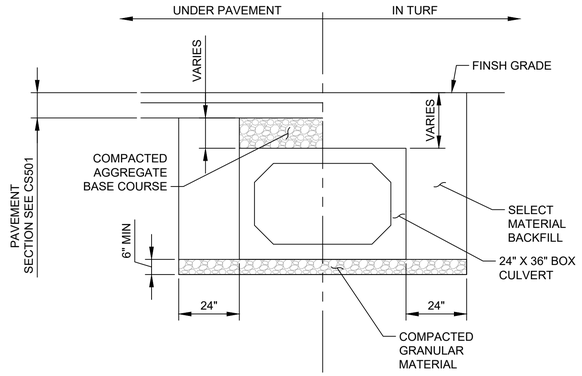

F5 CG102 BOX CULVERT INSTALLATION
NTS

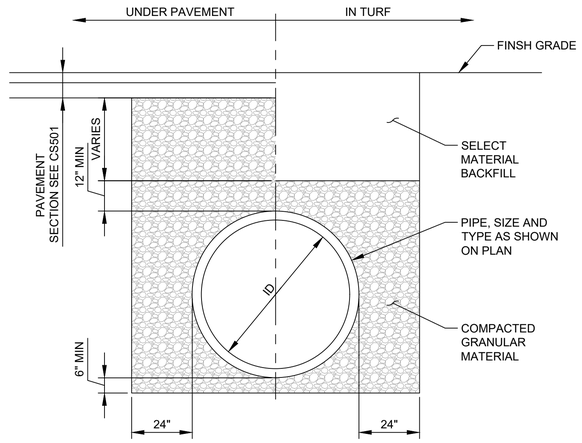

F3 CG102 SINGLE PIPE INSTALLATION
NTS

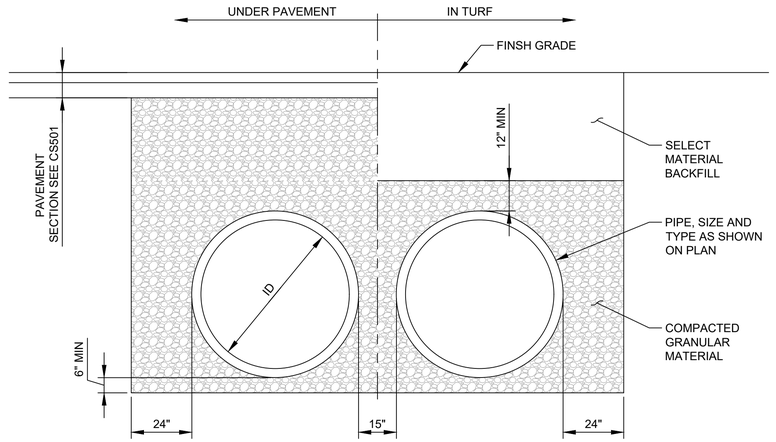

C3 CG101 DUAL PIPE INSTALLATION
NTS

FOR OFFICIAL USE ONLY
PUBLIC AVAILABILITY TO BE DETERMINED UNDER 5 USC 552

JACOBS
1100 N GLEBE RD.
SUITE 500
ARLINGTON, VA 22201

REV.	APPROVED DATE	DESCRIPTION	JCN	REDLINE DATE	APVD

Jacobs

DEPARTMENT OF TRANSPORTATION
FEDERAL AVIATION ADMINISTRATION
CENTRAL SERVICE AREA — FORTH WORTH, TX

MALSR
REPLACEMENT RUNWAY 18

DRAINAGE DETAILS

HOUMA — HOUMA-TERREBONNE AIRPORT — LA

COMMONWEALTH OF PENNSYLVANIA
REGISTERED PROFESSIONAL ENGINEER
CHRISTOPHER STEVEN WULFF
No. PE078766
7/16/25

HOUMA-TERRABONNE AIRPORT
HOUMA, LOUISIANA

REVIEWED BY	SUBMITTED BY		APPROVED BY
	SUBMITTER'S TITLE		APPROVER'S TITLE
	DESIGNED BY	W. KING	ISSUED BY: ENGINEERING SERVICES NAVAIDS
	DRAWN BY	W. KING	DATE 07-16-25 JCN: 22001835
	CHECKED BY	C. WULFF	DRAWING NO. HUM-D-MALSR-CG501 REV.

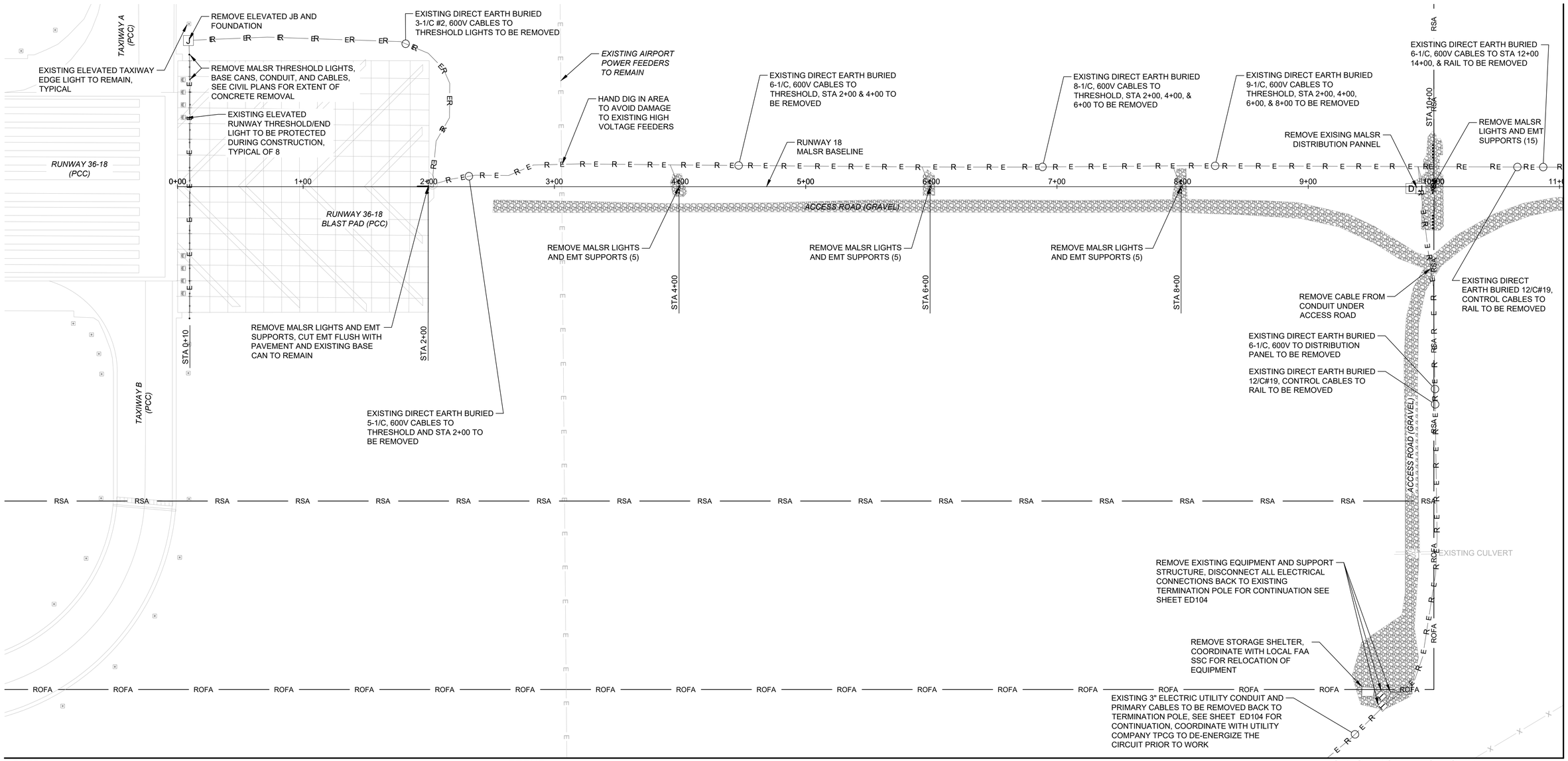

NOTES

1. CABLES ARE DIRECT BURIED EXCEPT FOR UNDER ROADWAYS AND BAYOU. UNLESS SHOWN OTHERWISE THE CABLES SHALL BE REMOVED FROM THE CONDUITS. EXISTING CONDUITS BELOW ROADWAYS AND BAYOU TO BE ABANDONED.
2. FOR FOUNDATION AND STRUCTURAL REMOVALS REFER TO CD SERIES OF DRAWINGS. IMMEDIATELY FOLLOWING REMOVAL OF EQUIPMENT FOUNDATIONS, HANDHOLES, AND JUNCTION STRUCTURES THE CONTRACTOR SHALL RESTORE THE VOID IN ACCORDANCE WITH THE REQUIREMENTS OF SPECIFICATION P-152. THE COST ASSOCIATED WITH THIS WORK SHALL BE CONSIDERED INCIDENTAL TO THE COST OF THE ASSOCIATED REMOVAL PAY ITEM.
3. ELECTRICAL UTILITY CONDUIT AND CABLES SHALL BE REMOVED IN THEIR ENTIRETY BACK TO THE EXISTING UTILITY TERMINATION POLE. COORDINATE DE-ENERGIZATION OF MALSR SERVICE PRIOR TO REMOVAL OF UTILITY COMPANY CONDUIT, CABLES, UTILITY METER, AND UTILITY TRANSFORMER.
4. THE CONTRACTOR SHALL SALVAGE BACK TO THE FAA LOCAL SSC THE FOLLOWING EXISTING EQUIPMENT: RAIL FLASHER JUNCTION BOXES, RAIL HIGH VOLTAGE FLASHER ICC'S, A/G RECEIVER, A/G ANTENNA, G/G RECEIVER, G/G ANTENNA, RADIO CONTROL ENCLOSURE, PAR-56 LAMPS, AND PAR-38 LAMPS.

LEGEND

R E R	REMOVE DIRECT BURIED ELECTRICAL CABLES (SEE NOTE 1 & 3)
A E A	ABANDON CONDUIT IN PLACE, REMOVE EXISTING CABLES (SEE NOTE 1)
E OR J	JUNCTION STRUCTURE TO BE REMOVED
E E	EXISTING UNDERGROUND ELECTRICAL CONDUIT/ DUCT BANK TO REMAIN
OH/E	EXISTING OVERHEAD ELECTRICAL CABLES TO REMAIN
COM	EXISTING UNDERGROUND COMMUNICATION CONDUIT/DUCT BANK TO REMAIN
NG NG	EXISTING NATURAL GAS LINE TO REMAIN
SAN	EXISTING SANITARY SEWER LINE TO REMAIN
ST	EXISTING STORM PIPE TO REMAIN
W W	EXISTING WATERLINE TO REMAIN
X X	EXISTING FENCE TO REMAIN

MATCH LINE SHEET ED104

KEY MAP

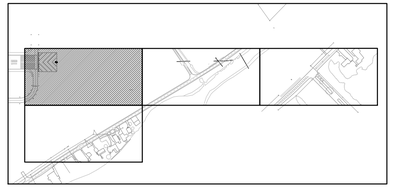

0 20' 40' 80'
SCALE: 1 INCH = 40 FEET

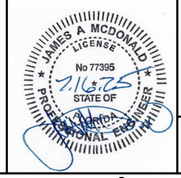

JACOBS
1100 N GLEBE RD.
SUITE 500
ARLINGTON, VA 22201

REV.	APPROVED DATE	DESCRIPTION	JCN	REDLINE DATE	APVD

FOR OFFICIAL USE ONLY
PUBLIC AVAILABILITY TO BE DETERMINED UNDER 5 USC 552

Jacobs

DEPARTMENT OF TRANSPORTATION
FEDERAL AVIATION ADMINISTRATION
CENTRAL SERVICE AREA — FORTH WORTH, TX

MALSR REPLACEMENT RUNWAY 18

ELECTRICAL DEMOLITION PLAN

HOUMA — HOUMA-TERREBONNE AIRPORT — LA

HOUMA-TERRABONNE AIRPORT
HOUMA, LOUISIANA

REVIEWED BY	SUBMITTED BY		APPROVED BY
	SUBMITTER'S TITLE		APPROVER'S TITLE
DESIGNED BY R. GARCIA	ISSUED BY	DATE 07-16-25	JCN: 22001835
DRAWN BY R. GARCIA	ENGINEERING SERVICES NAVAIDS	DRAWING NO. HUM-D-MALSR-ED101	REV.
CHECKED BY J. MCDONALD			

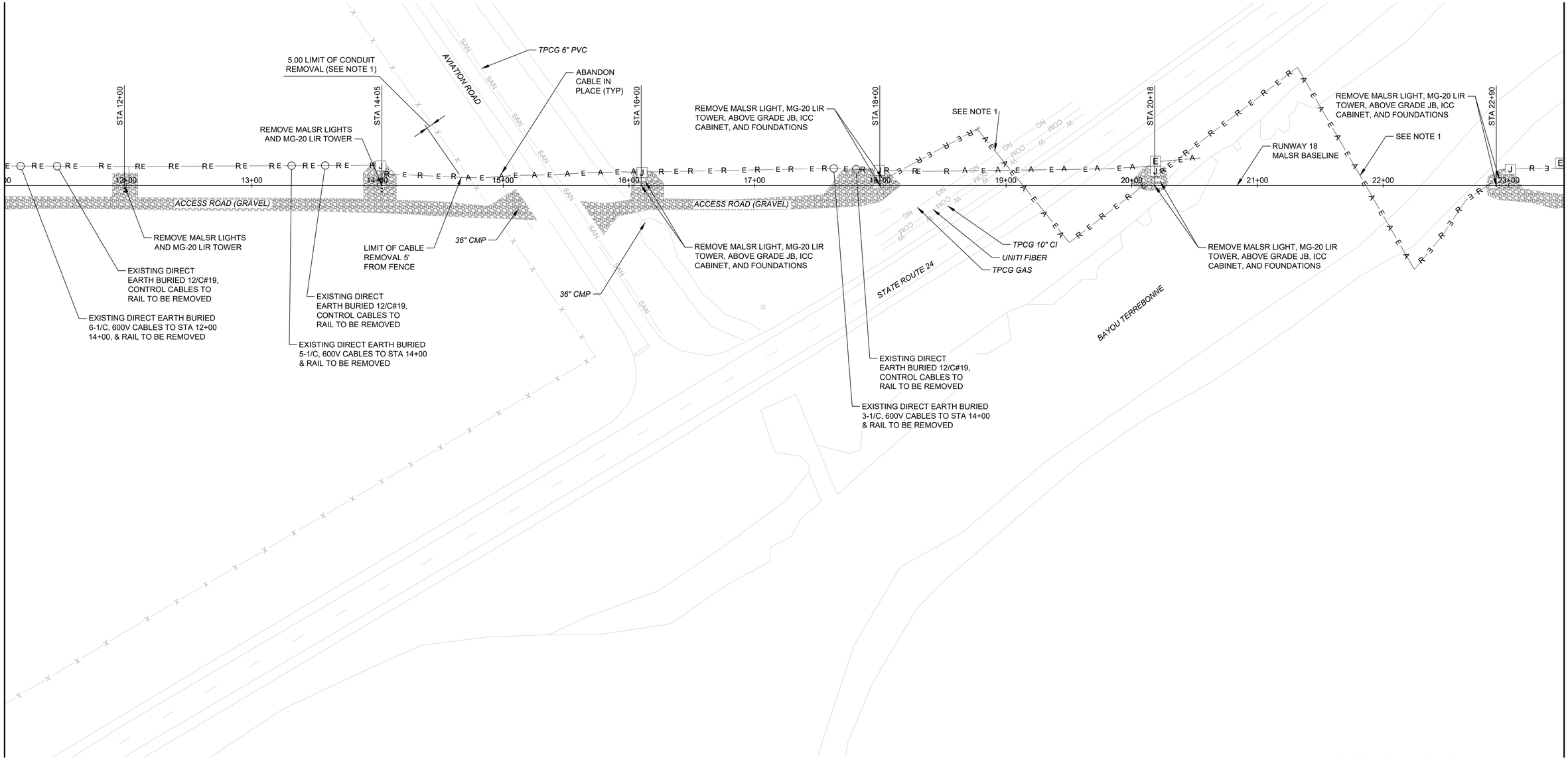

MATCH LINE SHEET ED101

MATCH LINE SHEET ED103

NOTES

1. CABLES ARE DIRECT BURIED EXCEPT FOR UNDER ROADWAYS. UNLESS SHOWN OTHERWISE THE CABLES SHALL BE REMOVED FROM THE CONDUITS.
2. FOR FOUNDATION AND STRUCTURAL REMOVALS REFER TO CD SERIES OF DRAWINGS.
3. IMMEDIATELY FOLLOWING REMOVAL OF EQUIPMENT FOUNDATIONS, HANDHOLES, AND JUNCTION STRUCTURES THE CONTRACTOR SHALL RESTORE THE VOID IN ACCORDANCE WITH THE REQUIREMENTS OF SPECIFICATION P-152. THE COST ASSOCIATED WITH THIS WORK SHALL BE CONSIDERED INCIDENTAL TO THE COST OF THE ASSOCIATED REMOVAL PAY ITEM.
4. THE CONTRACTOR SHALL SALVAGE BACK TO THE FAA LOCAL SSC THE FOLLOWING EXISTING EQUIPMENT: RAIL FLASHER JUNCTION BOXES, RAIL HIGH VOLTAGE FLASHER ICC'S, A/G RECEIVER, A/G ANTENNA, G/G RECEIVER, G/G ANTENNA, RADIO CONTROL ENCLOSURE, PAR-56 LAMPS, AND PAR-38 LAMPS.

LEGEND

R E R	REMOVE DIRECT BURIED ELECTRICAL CABLES (SEE NOTE 1)
A E A	ABANDON CONDUIT IN PLACE, REMOVE EXISTING CABLES (SEE NOTE 1)
E OR J	JUNCTION STRUCTURE TO BE REMOVED
E E	EXISTING UNDERGROUND ELECTRICAL CONDUIT/ DUCT BANK TO REMAIN
OH/E	EXISTING OVERHEAD ELECTRICAL CABLES TO REMAIN
COM	EXISTING UNDERGROUND COMMUNICATION CONDUIT/DUCT BANK TO REMAIN
NG NG	EXISTING NATURAL GAS LINE TO REMAIN
SAN	EXISTING SANITARY SEWER LINE TO REMAIN
ST	EXISTING STORM PIPE TO REMAIN
W W	EXISTING WATERLINE TO REMAIN
X X	EXISTING FENCE TO REMAIN

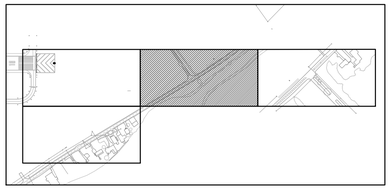

KEY MAP

N

0 20' 40' 80'

SCALE: 1 INCH = 40 FEET

JAMES A MCDONALD LICENSE No 77395 7.16.25 STATE OF FLORIDA PROFESSIONAL ENGINEER

FOR OFFICIAL USE ONLY

PUBLIC AVAILABILITY TO BE DETERMINED UNDER 5 USC 552

JACOBS
1100 N GLEBE RD.
SUITE 500
ARLINGTON, VA 22201

REV.	APPROVED DATE	DESCRIPTION	JCN	REDLINE DATE	APVD

DEPARTMENT OF TRANSPORTATION
FEDERAL AVIATION ADMINISTRATION
CENTRAL SERVICE AREA FORTH WORTH, TX

Jacobs

MALSR REPLACEMENT RUNWAY 18

ELECTRICAL DEMOLITION PLAN

HOUMA HOUMA-TERREBONNE AIRPORT LA

HOUMA-TERRABONNE AIRPORT
HOUMA, LOUISIANA

REVIEWED BY	SUBMITTED BY		APPROVED BY	
	SUBMITTER'S TITLE		APPROVER'S TITLE	
	DESIGNED BY	R. GARCIA	ISSUED BY: ENGINEERING SERVICES NAVAIDS	DATE 07-16-25 JCN: 22001835
	DRAWN BY	R. GARCIA		DRAWING NO. HUM-D-MALSR-ED102 REV.
	CHECKED BY	J. MCDONALD		

NOTES

1. CABLES ARE DIRECT BURIED EXCEPT FOR UNDER ROADWAYS. UNLESS SHOWN OTHERWISE THE CABLES SHALL BE REMOVED FROM THE CONDUITS.
2. FOR FOUNDATION AND STRUCTURAL REMOVALS REFER TO CD SERIES OF DRAWINGS.
3. IMMEDIATELY FOLLOWING REMOVAL OF EQUIPMENT FOUNDATIONS, HANDHOLES, AND JUNCTION STRUCTURES THE CONTRACTOR SHALL RESTORE THE VOID IN ACCORDANCE WITH THE REQUIREMENTS OF SPECIFICATION P-152. THE COST ASSOCIATED WITH THIS WORK SHALL BE CONSIDERED INCIDENTAL TO THE COST OF THE ASSOCIATED REMOVAL PAY ITEM.
4. THE CONTRACTOR SHALL SALVAGE BACK TO THE FAA LOCAL SSC THE FOLLOWING EXISTING EQUIPMENT: RAIL FLASHER JUNCTION BOXES, RAIL HIGH VOLTAGE FLASHER ICC'S, A/G RECEIVER, A/G ANTENNA, G/G RECEIVER, G/G ANTENNA, RADIO CONTROL ENCLOSURE, PAR-56 LAMPS, AND PAR-38 LAMPS.

LEGEND

R E R	REMOVE DIRECT BURIED ELECTRICAL CABLES (SEE NOTE 1)
A E A	ABANDON CONDUIT IN PLACE, REMOVE EXISTING CABLES (SEE NOTE 1)
E OR J	JUNCTION STRUCTURE TO BE REMOVED
E E	EXISTING UNDERGROUND ELECTRICAL CONDUIT/ DUCT BANK TO REMAIN
OHE	EXISTING OVERHEAD ELECTRICAL CABLES TO REMAIN
COM	EXISTING UNDERGROUND COMMUNICATION CONDUIT/DUCT BANK TO REMAIN
NG NG	EXISTING NATURAL GAS LINE TO REMAIN
SAN	EXISTING SANITARY SEWER LINE TO REMAIN
ST	EXISTING STORM PIPE TO REMAIN
W W	EXISTING WATERLINE TO REMAIN
X X	EXISTING FENCE TO REMAIN

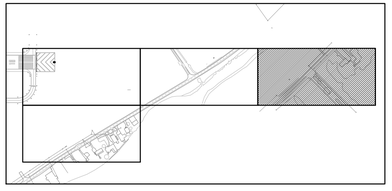

KEY MAP

N

0 20' 40' 80'

SCALE: 1 INCH = 40 FEET

JAMES A MCDONALD LICENSE No 77395 7.16.25 STATE OF FLORIDA PROFESSIONAL ENGINEER

FOR OFFICIAL USE ONLY

PUBLIC AVAILABILITY TO BE DETERMINED UNDER 5 USC 552

JACOBS
1100 N GLEBE RD.
SUITE 500
ARLINGTON, VA 22201

REV.	APPROVED DATE	DESCRIPTION	JCN	REDLINE DATE	APVD

Jacobs

DEPARTMENT OF TRANSPORTATION
FEDERAL AVIATION ADMINISTRATION
CENTRAL SERVICE AREA FORTH WORTH, TX

MALSR
REPLACEMENT RUNWAY 18

ELECTRICAL DEMOLITION PLAN

HOUMA HOUMA-TERREBONNE AIRPORT LA

HOUMA-TERRABONNE AIRPORT
HOUMA, LOUISIANA

REVIEWED BY	SUBMITTED BY		APPROVED BY
	SUBMITTER'S TITLE		APPROVER'S TITLE
	DESIGNED BY R. GARCIA	ISSUED BY: ENGINEERING SERVICES NAVAIDS	DATE 07-16-25 JCN: 22001835
	DRAWN BY R. GARCIA		DRAWING NO. HUM-D-MALSR-ED103 REV.
	CHECKED BY J. MCDONALD		

MATCH LINE SHEET ED101

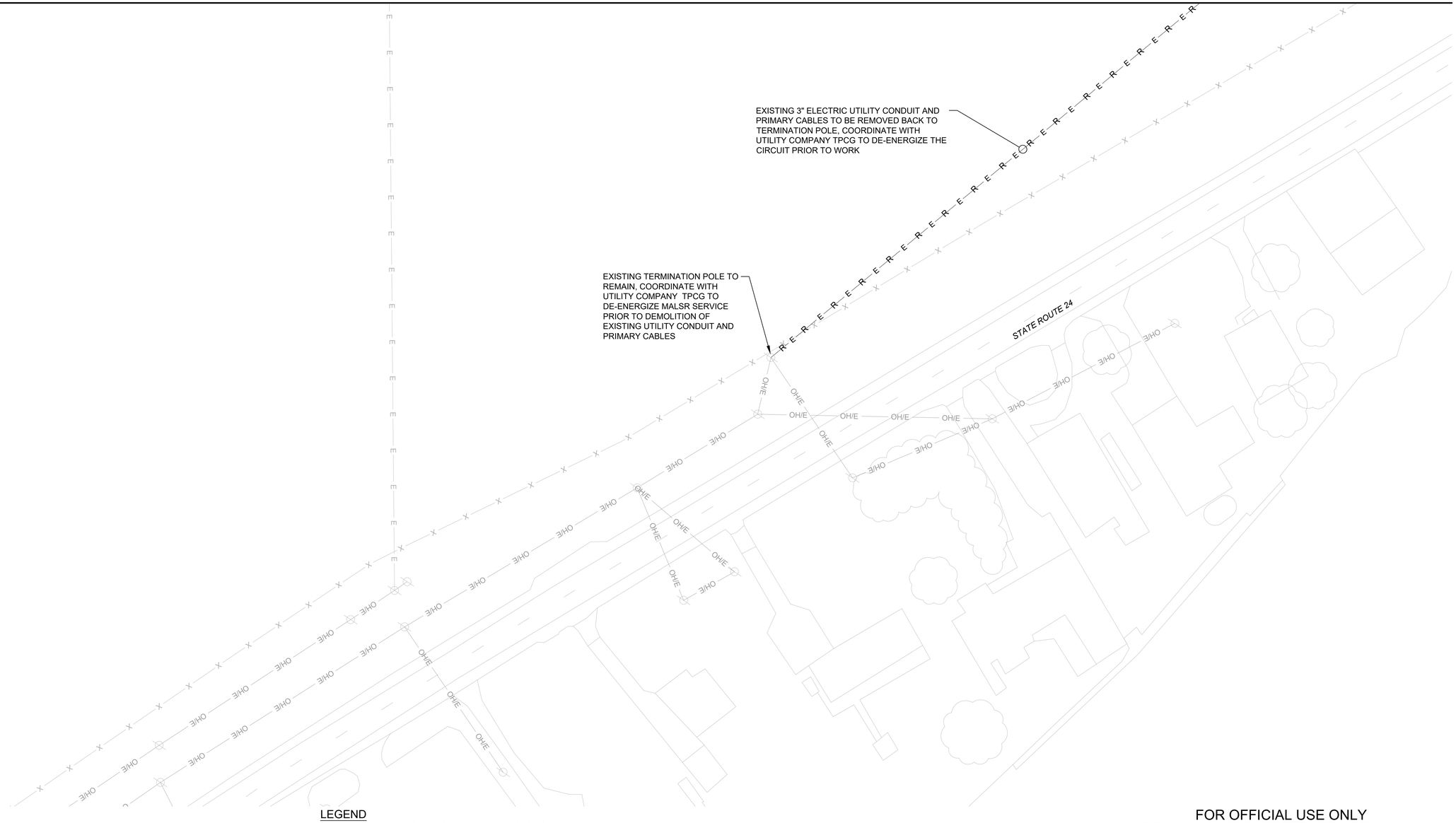

NOTES

1. CABLES ARE DIRECT BURIED EXCEPT FOR UNDER ROADWAYS. UNLESS SHOWN OTHERWISE THE CABLES SHALL BE REMOVED FROM THE CONDUITS.
2. FOR FOUNDATION AND STRUCTURAL REMOVALS REFER TO CD SERIES OF DRAWINGS.
3. ELECTRICAL UTILITY CONDUIT AND CABLES SHALL BE REMOVED IN THEIR ENTIRETY BACK TO THE EXISTING UTILITY TERMINATION POLE. COORDINATE DE-ENERGIZATION OF MALSR SERVICE PRIOR TO REMOVAL OF UTILITY COMPANY CONDUIT, CABLES, UTILITY METER, AND UTILITY TRANSFORMER.
4. IMMEDIATELY FOLLOWING REMOVAL OF EQUIPMENT FOUNDATIONS, HANDHOLES, AND JUNCTION STRUCTURES THE CONTRACTOR SHALL RESTORE THE VOID IN ACCORDANCE WITH THE REQUIREMENTS OF SPECIFICATION P-152. THE COST ASSOCIATED WITH THIS WORK SHALL BE CONSIDERED INCIDENTAL TO THE COST OF THE ASSOCIATED REMOVAL PAY ITEM.
5. THE CONTRACTOR SHALL SALVAGE BACK TO THE FAA LOCAL SSC THE FOLLOWING EXISTING EQUIPMENT: RAIL FLASHER JUNCTION BOXES, RAIL HIGH VOLTAGE FLASHER ICC'S, A/G RECEIVER, A/G ANTENNA, G/G RECEIVER, G/G ANTENNA, RADIO CONTROL ENCLOSURE, PAR-56 LAMPS, AND PAR-38 LAMPS.

LEGEND

R E R	REMOVE DIRECT BURIED ELECTRICAL CABLES (SEE NOTE 1 & 3)
A E A	ABANDON CONDUIT IN PLACE, REMOVE EXISTING CABLES (SEE NOTE 1)
E OR J	JUNCTION STRUCTURE TO BE REMOVED
E E	EXISTING UNDERGROUND ELECTRICAL CONDUIT/ DUCT BANK TO REMAIN
OH/E	EXISTING OVERHEAD ELECTRICAL CABLES TO REMAIN
COM	EXISTING UNDERGROUND COMMUNICATION CONDUIT/DUCT BANK TO REMAIN
NG NG	EXISTING NATURAL GAS LINE TO REMAIN
SAN	EXISTING SANITARY SEWER LINE TO REMAIN
ST	EXISTING STORM PIPE TO REMAIN
W W	EXISTING WATERLINE TO REMAIN
X X	EXISTING FENCE TO REMAIN

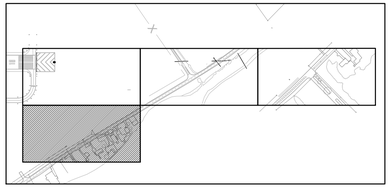

KEY MAP

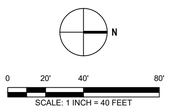

0 20' 40' 80'

SCALE: 1 INCH = 40 FEET

FOR OFFICIAL USE ONLY
PUBLIC AVAILABILITY TO BE DETERMINED UNDER 5 USC 552

JAMES A MCDONALD LICENSE No 77395 7/16/25 STATE OF LOUISIANA PROFESSIONAL ENGINEER

JACOBS
1100 N GLEBE RD.
SUITE 500
ARLINGTON, VA 22201

REV.	APPROVED DATE	DESCRIPTION	JCN	REDLINE DATE	APVD

Jacobs

DEPARTMENT OF TRANSPORTATION
FEDERAL AVIATION ADMINISTRATION
CENTRAL SERVICE AREA FORTH WORTH, TX

MALSR
REPLACEMENT RUNWAY 18

ELECTRICAL DEMOLITION PLAN

HOUMA HOUMA-TERREBONNE AIRPORT LA

REVIEWED BY	SUBMITTED BY	APPROVED BY
	SUBMITTER'S TITLE	APPROVER'S TITLE
	DESIGNED BY R. GARCIA	ISSUED BY: ENGINEERING SERVICES NAVAIDS
	DRAWN BY R. GARCIA	DATE 07-16-25 JCN: 22001835
	CHECKED BY J. MCDONALD	DRAWING NO. HUM-D-MALSR-ED104 REV.

HOUMA-TERRABONNE AIRPORT
HOUMA, LOUISIANA

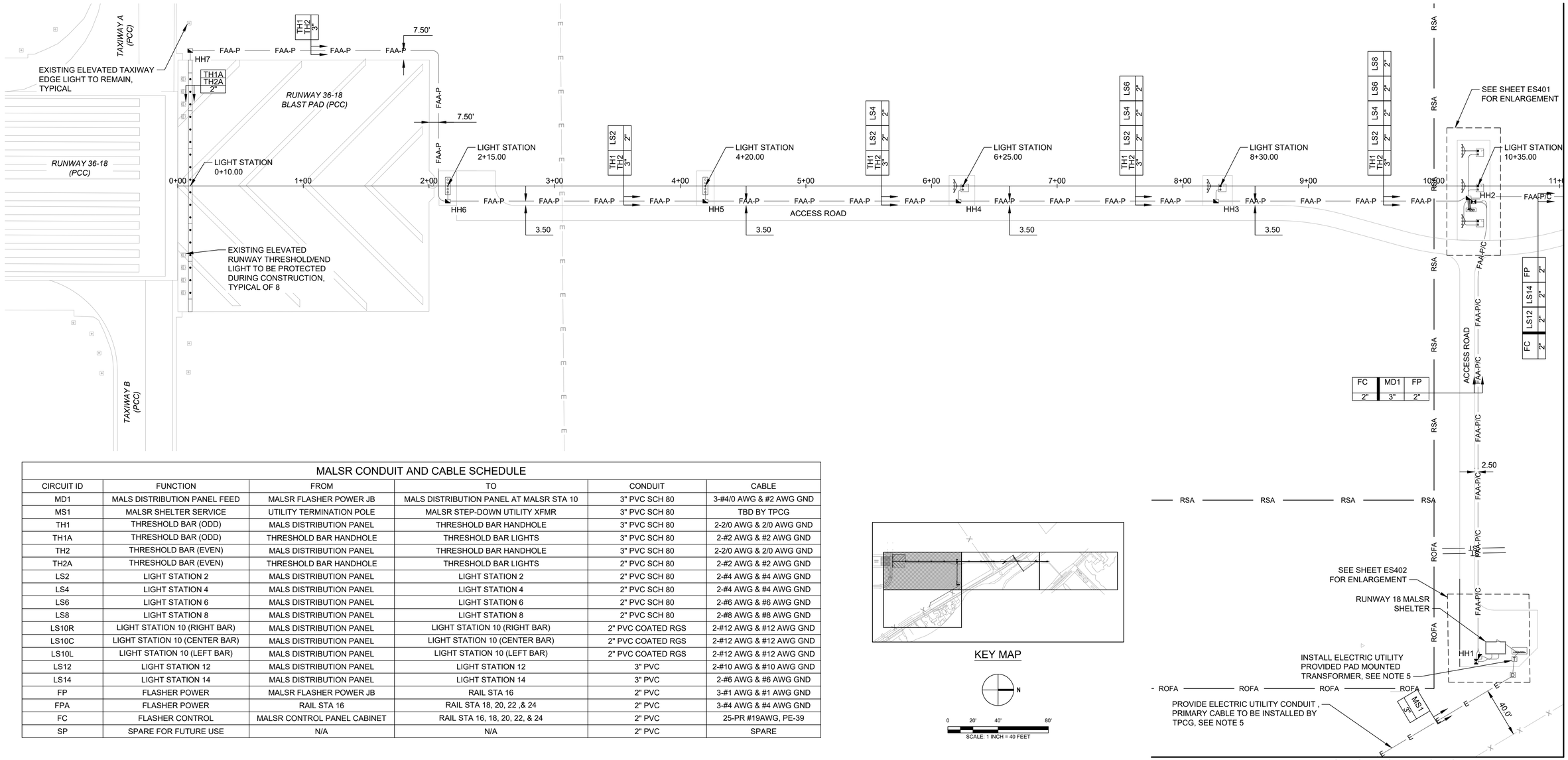

MALSR CONDUIT AND CABLE SCHEDULE

CIRCUIT ID	FUNCTION	FROM	TO	CONDUIT	CABLE
MD1	MALS DISTRIBUTION PANEL FEED	MALSR FLASHER POWER JB	MALS DISTRIBUTION PANEL AT MALSR STA 10	3" PVC SCH 80	3-#4/0 AWG & #2 AWG GND
MS1	MALSR SHELTER SERVICE	UTILITY TERMINATION POLE	MALSR STEP-DOWN UTILITY XFMR	3" PVC SCH 80	TBD BY TPCG
TH1	THRESHOLD BAR (ODD)	MALS DISTRIBUTION PANEL	THRESHOLD BAR HANDHOLE	3" PVC SCH 80	2-2/0 AWG & 2/0 AWG GND
TH1A	THRESHOLD BAR (ODD)	THRESHOLD BAR HANDHOLE	THRESHOLD BAR LIGHTS	3" PVC SCH 80	2-#2 AWG & #2 AWG GND
TH2	THRESHOLD BAR (EVEN)	MALS DISTRIBUTION PANEL	THRESHOLD BAR HANDHOLE	3" PVC SCH 80	2-2/0 AWG & 2/0 AWG GND
TH2A	THRESHOLD BAR (EVEN)	THRESHOLD BAR HANDHOLE	THRESHOLD BAR LIGHTS	2" PVC SCH 80	2-#2 AWG & #2 AWG GND
LS2	LIGHT STATION 2	MALS DISTRIBUTION PANEL	LIGHT STATION 2	2" PVC SCH 80	2-#4 AWG & #4 AWG GND
LS4	LIGHT STATION 4	MALS DISTRIBUTION PANEL	LIGHT STATION 4	2" PVC SCH 80	2-#4 AWG & #4 AWG GND
LS6	LIGHT STATION 6	MALS DISTRIBUTION PANEL	LIGHT STATION 6	2" PVC SCH 80	2-#6 AWG & #6 AWG GND
LS8	LIGHT STATION 8	MALS DISTRIBUTION PANEL	LIGHT STATION 8	2" PVC SCH 80	2-#8 AWG & #8 AWG GND
LS10R	LIGHT STATION 10 (RIGHT BAR)	MALS DISTRIBUTION PANEL	LIGHT STATION 10 (RIGHT BAR)	2" PVC COATED RGS	2-#12 AWG & #12 AWG GND
LS10C	LIGHT STATION 10 (CENTER BAR)	MALS DISTRIBUTION PANEL	LIGHT STATION 10 (CENTER BAR)	2" PVC COATED RGS	2-#12 AWG & #12 AWG GND
LS10L	LIGHT STATION 10 (LEFT BAR)	MALS DISTRIBUTION PANEL	LIGHT STATION 10 (LEFT BAR)	2" PVC COATED RGS	2-#12 AWG & #12 AWG GND
LS12	LIGHT STATION 12	MALS DISTRIBUTION PANEL	LIGHT STATION 12	3" PVC	2-#10 AWG & #10 AWG GND
LS14	LIGHT STATION 14	MALS DISTRIBUTION PANEL	LIGHT STATION 14	3" PVC	2-#6 AWG & #6 AWG GND
FP	FLASHER POWER	MALSR FLASHER POWER JB	RAIL STA 16	2" PVC	3-#1 AWG & #1 AWG GND
FPA	FLASHER POWER	RAIL STA 16	RAIL STA 18, 20, 22 ,& 24	2" PVC	3-#4 AWG & #4 AWG GND
FC	FLASHER CONTROL	MALSR CONTROL PANEL CABINET	RAIL STA 16, 18, 20, 22, & 24	2" PVC	25-PR #19AWG, PE-39
SP	SPARE FOR FUTURE USE	N/A	N/A	2" PVC	SPARE

KEY MAP

N

0 20' 40' 80'

SCALE: 1 INCH = 40 FEET

NOTES

1. REFER TO SHEET G-003 FOR GENERAL NOTES, ABBREVIATIONS, AND LEGEND.
2. THE CONTRACTOR SHALL COMPLY WITH FAA "LOCK-OUT/TAG-OUT" PROCEDURES AND NFPA 70E.
3. ALL CONTRACTOR PROVIDED MATERIALS SHALL MEET ALL APPLICABLE FAA SPECIFICATIONS AND REQUIREMENTS INCLUDING BUT NOT LIMITED TO FAA-C-1391, FAA-STD-19, AND FAA-C-1217 LATEST VERSIONS.
4. REFER TO SHEET G-300 FOR MALSR STEADY BURN AND RAIL LAMP CENTERLINE ELEVATIONS, LIGHT PLANE, AND FOUNDATION ELEVATIONS.
5. CONSTRUCT ELECTRIC UTILITY INFRASTRUCTURE IN ACCORDANCE WITH TPCG STANDARDS AND SPECIFICATIONS OR AS NOTED ON THIS DRAWING. COORDINATE INSTALLATION OF ALL ELECTRIC UTILITY INFRASTRUCTURE WITH TPCG. PERFORM SITE INSPECTIONS AS REQUIRED PRIOR TO BACKFILLING TRENCH AND PRIOR TO INSTALLING UTILITY TRANSFORMER ON TRANSFORMER PAD.

LEGEND

- FAA-P — FAA POWER CONCRETE ENCASED DUCTBANK, SIZE AND NUMBER AS INDICATED
- FAA-P/C — FAA POWER AND CONTROL CONCRETE ENCASED DUCTBANK, SIZE AND NUMBER AS INDICATED
- FAA-P/C — DIRECTIONAL DRILL CONDUIT, SIZE AND NUMBER AS INDICATED
- FAA POWER HANDHOLE, AIRCRAFT RATED, 36" X 24" HANDHOLE
- FAA CONTROL HANDHOLE, AIRCRAFT RATED, 36" X 24" HANDHOLE
- FAA POWER HANDHOLE, H-20 RATED, 36" X 24" HANDHOLE
- FAA CONTROL HANDHOLE, H-20 RATED, 36" X 24" HANDHOLE
- D — DUCT MARKER
- T — STEP-DOWN TRANSFORMER
- E — ELECTRIC UTILITY CONDUIT, SIZE AS INDICATED, CABLES BY TPCG, SEE NOTE 5
- E — EXISTING UNDERGROUND ELECTRICAL CONDUIT/ DUCT BANK TO REMAIN
- OH/E — EXISTING OVERHEAD ELECTRICAL CABLES TO REMAIN
- COM — EXISTING UNDERGROUND COMMUNICATION CONDUIT/DUCT BANK TO REMAIN
- NG — EXISTING NATURAL GAS LINE TO REMAIN
- SAN — EXISTING SANITARY SEWER LINE TO REMAIN
- ST — EXISTING STORM PIPE TO REMAIN
- W — EXISTING WATERLINE TO REMAIN
- X — EXISTING FENCE TO REMAIN

MATCH LINE SHEET ES104

FOR OFFICIAL USE ONLY
PUBLIC AVAILABILITY TO BE DETERMINED UNDER 5 USC 552

JACOBS
1100 N GLEBE RD.
SUITE 500
ARLINGTON, VA 22201

REV.	APPROVED DATE	DESCRIPTION	JCN	REDLINE DATE	APVD

DEPARTMENT OF TRANSPORTATION
FEDERAL AVIATION ADMINISTRATION
CENTRAL SERVICE AREA — FORTH WORTH, TX

MALSR REPLACEMENT RUNWAY 18

ELECTRICAL SITE PLAN

HOUMA — HOUMA-TERREBONNE AIRPORT — LA

JAMES A. MCDONALD LICENSE No 77395 STATE OF LOUISIANA PROFESSIONAL ENGINEER 7.16.25

HOUMA-TERRABONNE AIRPORT
HOUMA, LOUISIANA

REVIEWED BY	SUBMITTED BY	APPROVED BY
	SUBMITTER'S TITLE	APPROVER'S TITLE
DESIGNED BY R. GARCIA	ISSUED BY ENGINEERING SERVICES NAVAIDS	DATE 07-16-25 JCN: 22001835
DRAWN BY R. GARCIA		DRAWING NO. HUM-D-MALSR-ES101 REV.
CHECKED BY J. MCDONALD		

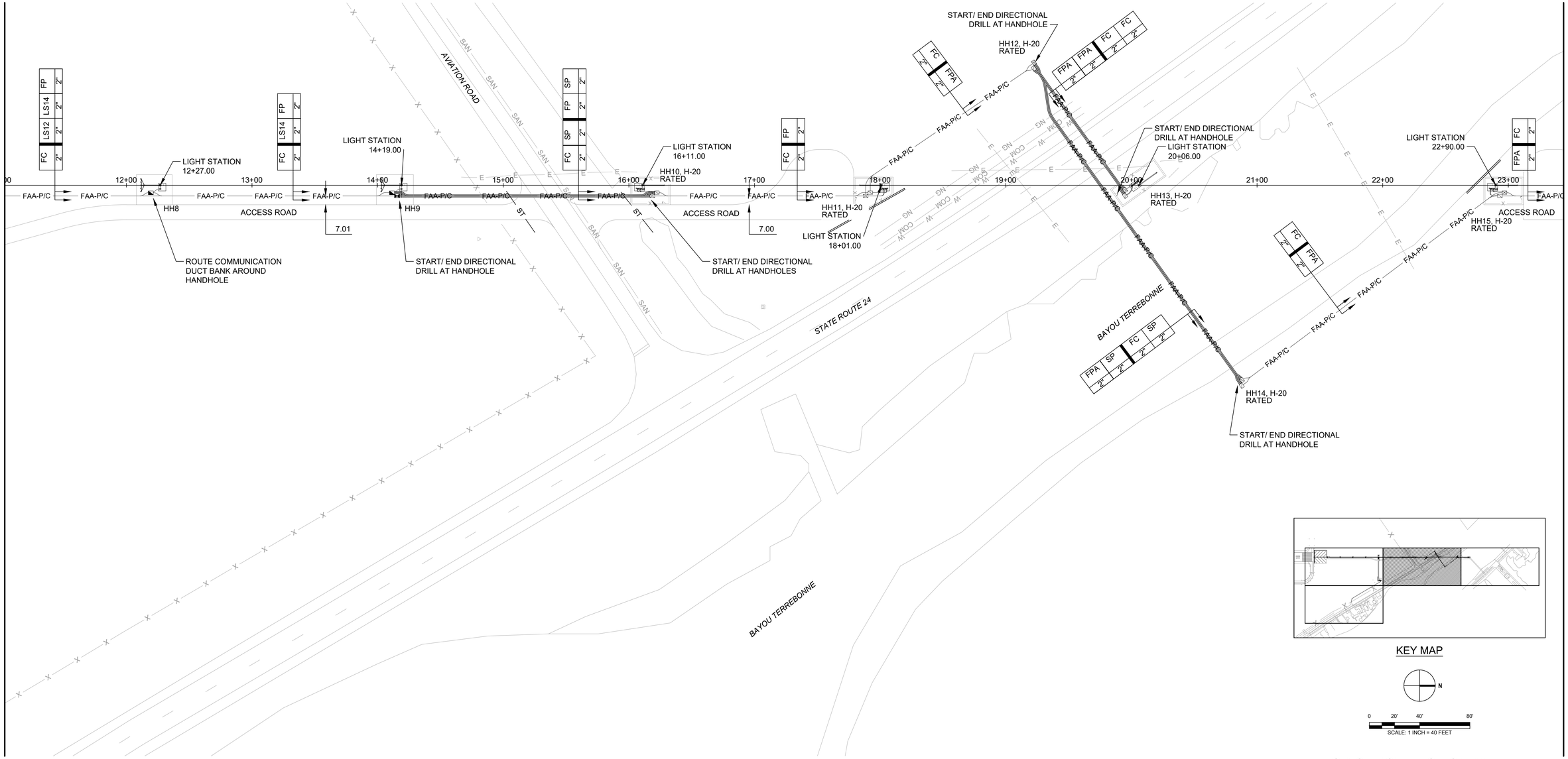

NOTES

1. REFER TO SHEET ES101 FOR MALSR CIRCUIT SCHEDULE.
2. REFER TO SHEET G-003 FOR GENERAL NOTES, ABBREVIATIONS, AND LEGEND.
3. THE CONTRACTOR SHALL COMPLY WITH FAA "LOCK-OUT/TAG-OUT" PROCEDURES AND NFPA 70E.
4. ALL CONTRACTOR PROVIDED MATERIALS SHALL MEET ALL APPLICABLE FAA SPECIFICATIONS AND REQUIREMENTS INCLUDING BUT NOT LIMITED TO FAA-C-1391, FAA-STD-19, AND FAA-C-1217 LATEST VERSIONS.
5. REFER TO SHEET G-300 FOR MALSR STEADY BURN AND RAIL LAMP CENTERLINE ELEVATIONS, LIGHT PLANE, AND FOUNDATION ELEVATIONS.

LEGEND

- FAA-P — FAA POWER CONCRETE ENCASED DUCTBANK, SIZE AND NUMBER AS INDICATED
- FAA-P/C — FAA POWER AND CONTROL CONCRETE ENCASED DUCTBANK, SIZE AND NUMBER AS INDICATED
- FAA-P/C — DIRECTIONAL DRILL CONDUIT, SIZE AND NUMBER AS INDICATED
- FAA POWER HANDHOLE, AIRCRAFT RATED, 36" X 24" HANDHOLE
- FAA CONTROL HANDHOLE, AIRCRAFT RATED, 36" X 24" HANDHOLE
- FAA POWER HANDHOLE, H-20 RATED, 36" X 24" HANDHOLE
- FAA CONTROL HANDHOLE, H-20 RATED, 36" X 24" HANDHOLE
- D — DUCT MARKER
- E E — EXISTING UNDERGROUND ELECTRICAL CONDUIT/ DUCT BANK TO REMAIN
- OH/E — EXISTING OVERHEAD ELECTRICAL CABLES TO REMAIN
- COM — EXISTING UNDERGROUND COMMUNICATION CONDUIT/DUCT BANK TO REMAIN
- NG NG — EXISTING NATURAL GAS LINE TO REMAIN
- SAN — EXISTING SANITARY SEWER LINE TO REMAIN
- ST — EXISTING STORM PIPE TO REMAIN
- W W — EXISTING WATERLINE TO REMAIN
- X X — EXISTING FENCE TO REMAIN

KEY MAP

N

0 20' 40' 80'
SCALE: 1 INCH = 40 FEET

FOR OFFICIAL USE ONLY
PUBLIC AVAILABILITY TO BE DETERMINED UNDER 5 USC 552

JAMES A MCDONALD LICENSE No 77395 7.16.25 STATE OF LOUISIANA PROFESSIONAL ENGINEER

HOUMA-TERRABONNE AIRPORT
HOUMA, LOUISIANA

JACOBS
1100 N GLEBE RD.
SUITE 500
ARLINGTON, VA 22201

REV.	APPROVED DATE	DESCRIPTION	JCN	REDLINE DATE	APVD

DEPARTMENT OF TRANSPORTATION
FEDERAL AVIATION ADMINISTRATION
CENTRAL SERVICE AREA — FORTH WORTH, TX

MALSR
REPLACEMENT RUNWAY 18

ELECTRICAL SITE PLAN

HOUMA — HOUMA-TERREBONNE AIRPORT — LA

REVIEWED BY	SUBMITTED BY	APPROVED BY
	SUBMITTER'S TITLE	APPROVER'S TITLE
	DESIGNED BY R. GARCIA	ISSUED BY: ENGINEERING SERVICES NAVAIDS
	DRAWN BY R. GARCIA	DATE 07-16-25
	CHECKED BY J. MCDONALD	JCN: 22001835
		DRAWING NO. HUM-D-MALSR-ES102
		REV.

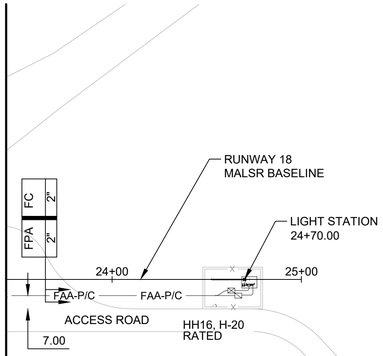

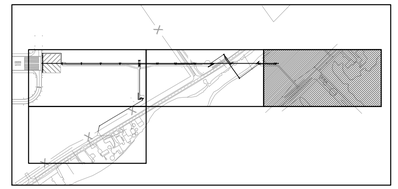

KEY MAP

N

0 20' 40' 80'

SCALE: 1 INCH = 40 FEET

MATCH LINE SHEET ES102

NOTES

1. REFER TO SHEET ES101 FOR MALSR CIRCUIT SCHEDULE.
2. REFER TO SHEET G-003 FOR GENERAL NOTES, ABBREVIATIONS, AND LEGEND.
3. THE CONTRACTOR SHALL COMPLY WITH FAA "LOCK-OUT/TAG-OUT" PROCEDURES AND NFPA 70E.
4. ALL CONTRACTOR PROVIDED MATERIALS SHALL MEET ALL APPLICABLE FAA SPECIFICATIONS AND REQUIREMENTS INCLUDING BUT NOT LIMITED TO FAA-C-1391, FAA-STD-19, AND FAA-C-1217 LATEST VERSIONS.
5. REFER TO SHEET G-300 FOR MALSR STEADY BURN AND RAIL LAMP CENTERLINE ELEVATIONS, LIGHT PLANE, AND FOUNDATION ELEVATIONS.

LEGEND

FAA-P	FAA POWER CONCRETE ENCASED DUCTBANK, SIZE AND NUMBER AS INDICATED
FAA-P/C	FAA POWER AND CONTROL CONCRETE ENCASED DUCTBANK, SIZE AND NUMBER AS INDICATED
FAA-P/C	DIRECTIONAL DRILL CONDUIT, SIZE AND NUMBER AS INDICATED
	FAA POWER HANDHOLE, AIRCRAFT RATED, 36" X 24" HANDHOLE
	FAA CONTROL HANDHOLE, AIRCRAFT RATED, 36" X 24" HANDHOLE
	FAA POWER HANDHOLE, H-20 RATED, 36" X 24" HANDHOLE
	FAA CONTROL HANDHOLE, H-20 RATED, 36" X 24" HANDHOLE
D	DUCT MARKER
E E	EXISTING UNDERGROUND ELECTRICAL CONDUIT/ DUCT BANK TO REMAIN
OH/E	EXISTING OVERHEAD ELECTRICAL CABLES TO REMAIN
COM	EXISTING UNDERGROUND COMMUNICATION CONDUIT/DUCT BANK TO REMAIN
NG NG	EXISTING NATURAL GAS LINE TO REMAIN
SAN	EXISTING SANITARY SEWER LINE TO REMAIN
ST	EXISTING STORM PIPE TO REMAIN
W W	EXISTING WATERLINE TO REMAIN
X X	EXISTING FENCE TO REMAIN

JAMES A MCDONALD LICENSE No 77395 7.16.25 STATE OF LOUISIANA PROFESSIONAL ENGINEER

FOR OFFICIAL USE ONLY
PUBLIC AVAILABILITY TO BE DETERMINED UNDER 5 USC 552

JACOBS
1100 N GLEBE RD.
SUITE 500
ARLINGTON, VA 22201

REV.	APPROVED DATE	DESCRIPTION	JCN	REDLINE DATE	APVD

DEPARTMENT OF TRANSPORTATION
FEDERAL AVIATION ADMINISTRATION
CENTRAL SERVICE AREA FORTH WORTH, TX

Jacobs

MALSR
REPLACEMENT RUNWAY 18

ELECTRICAL SITE PLAN

HOUMA HOUMA-TERREBONNE AIRPORT LA

HOUMA-TERRABONNE AIRPORT
HOUMA, LOUISIANA

REVIEWED BY	SUBMITTED BY	APPROVED BY	
	SUBMITTER'S TITLE	APPROVER'S TITLE	
DESIGNED BY R. GARCIA	ISSUED BY ENGINEERING SERVICES NAVAIDS	DATE 07-16-25	JCN: 22001835
DRAWN BY R. GARCIA		DRAWING NO. HUM-D-MALSR-ES103	REV.
CHECKED BY J. MCDONALD			

MATCH LINE SHEET ES101

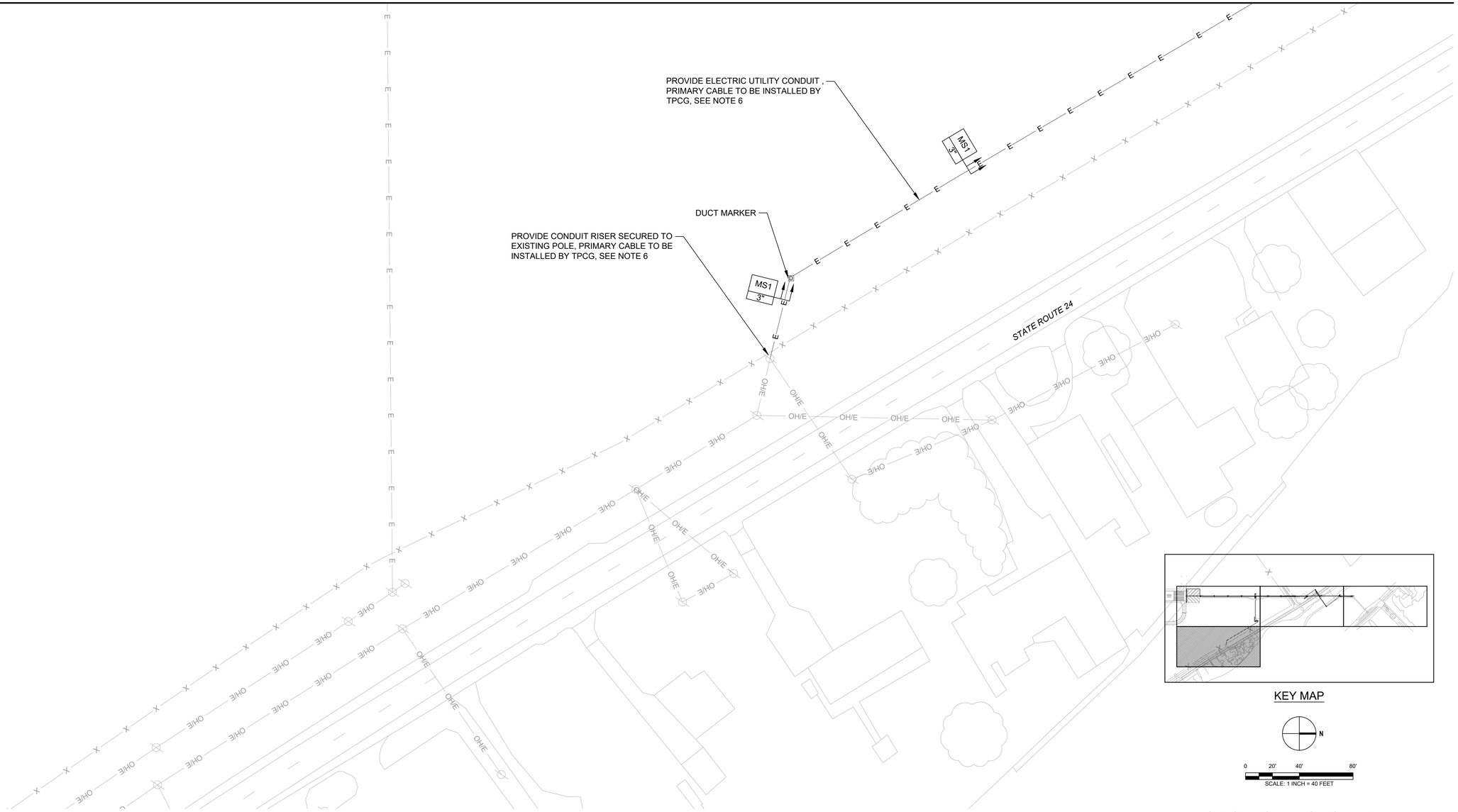

KEY MAP

N

0 20' 40' 80'

SCALE: 1 INCH = 40 FEET

NOTES

1. REFER TO SHEET ES101 FOR MALSR CIRCUIT SCHEDULE.
2. REFER TO SHEET G-003 FOR GENERAL NOTES, ABBREVIATIONS, AND LEGEND.
3. THE CONTRACTOR SHALL COMPLY WITH FAA "LOCK-OUT/TAG-OUT" PROCEDURES AND NFPA 70E.
4. ALL CONTRACTOR PROVIDED MATERIALS SHALL MEET ALL APPLICABLE FAA SPECIFICATIONS AND REQUIREMENTS INCLUDING BUT NOT LIMITED TO FAA-C-1391, FAA-STD-19, AND FAA-C-1217 LATEST VERSIONS.
5. REFER TO SHEET G-300 FOR MALSR STEADY BURN AND RAIL LAMP CENTERLINE ELEVATIONS, LIGHT PLANE, AND FOUNDATION ELEVATIONS.
6. CONSTRUCT ELECTRIC UTILITY INFRASTRUCTURE IN ACCORDANCE WITH TPCG STANDARDS AND SPECIFICATIONS OR AS NOTED ON THIS DRAWING. COORDINATE INSTALLATION OF ALL ELECTRIC UTILITY INFRASTRUCTURE WITH TPCG. PERFORM SITE INSPECTIONS AS REQUIRED PRIOR TO BACKFILLING TRENCH AND PRIOR TO INSTALLING UTILITY TRANSFORMER ON TRANSFORMER PAD.

LEGEND

- FAA-P — FAA POWER CONCRETE ENCASED DUCTBANK, SIZE AND NUMBER AS INDICATED
- FAA-P/C — FAA POWER AND CONTROL CONCRETE ENCASED DUCTBANK, SIZE AND NUMBER AS INDICATED
- FAA-P/C — DIRECTIONAL DRILL CONDUIT, SIZE AND NUMBER AS INDICATED
- FAA POWER HANDHOLE, AIRCRAFT RATED, 36" X 24" HANDHOLE
- FAA CONTROL HANDHOLE, AIRCRAFT RATED, 36" X 24" HANDHOLE
- FAA POWER HANDHOLE, H-20 RATED, 36" X 24" HANDHOLE
- FAA CONTROL HANDHOLE, H-20 RATED, 36" X 24" HANDHOLE
- D — DUCT MARKER
- E — ELECTRIC UTILITY CONDUIT, SIZE AS INDICATED, CABLES BY TPCG, SEE NOTE 6
- E E — EXISTING UNDERGROUND ELECTRICAL CONDUIT/ DUCT BANK TO REMAIN
- OH/E — EXISTING OVERHEAD ELECTRICAL CABLES TO REMAIN
- COM — EXISTING UNDERGROUND COMMUNICATION CONDUIT/DUCT BANK TO REMAIN
- NG NG — EXISTING NATURAL GAS LINE TO REMAIN
- SAN — EXISTING SANITARY SEWER LINE TO REMAIN
- ST — EXISTING STORM PIPE TO REMAIN
- W W — EXISTING WATERLINE TO REMAIN
- X X — EXISTING FENCE TO REMAIN

JAMES A MCDONALD LICENSE No 77395 STATE OF LOUISIANA PROFESSIONAL ENGINEER 7.16.25

FOR OFFICIAL USE ONLY
PUBLIC AVAILABILITY TO BE DETERMINED UNDER 5 USC 552

JACOBS
1100 N GLEBE RD.
SUITE 500
ARLINGTON, VA 22201

REV.	APPROVED DATE	DESCRIPTION	JCN	REDLINE DATE	APVD

Jacobs

DEPARTMENT OF TRANSPORTATION
FEDERAL AVIATION ADMINISTRATION
CENTRAL SERVICE AREA — FORTH WORTH, TX

MALSR REPLACEMENT RUNWAY 18

ELECTRICAL SITE PLAN

HOUMA — HOUMA-TERREBONNE AIRPORT — LA

HOUMA-TERRABONNE AIRPORT
HOUMA, LOUISIANA

REVIEWED BY	SUBMITTED BY		APPROVED BY
	SUBMITTER'S TITLE		APPROVER'S TITLE
	DESIGNED BY R. GARCIA	ISSUED BY ENGINEERING SERVICES NAVAIDS	DATE 07-16-25 JCN: 22001835
	DRAWN BY R. GARCIA		DRAWING NO. HUM-D-MALSR-ES104 REV.
	CHECKED BY J. MCDONALD		

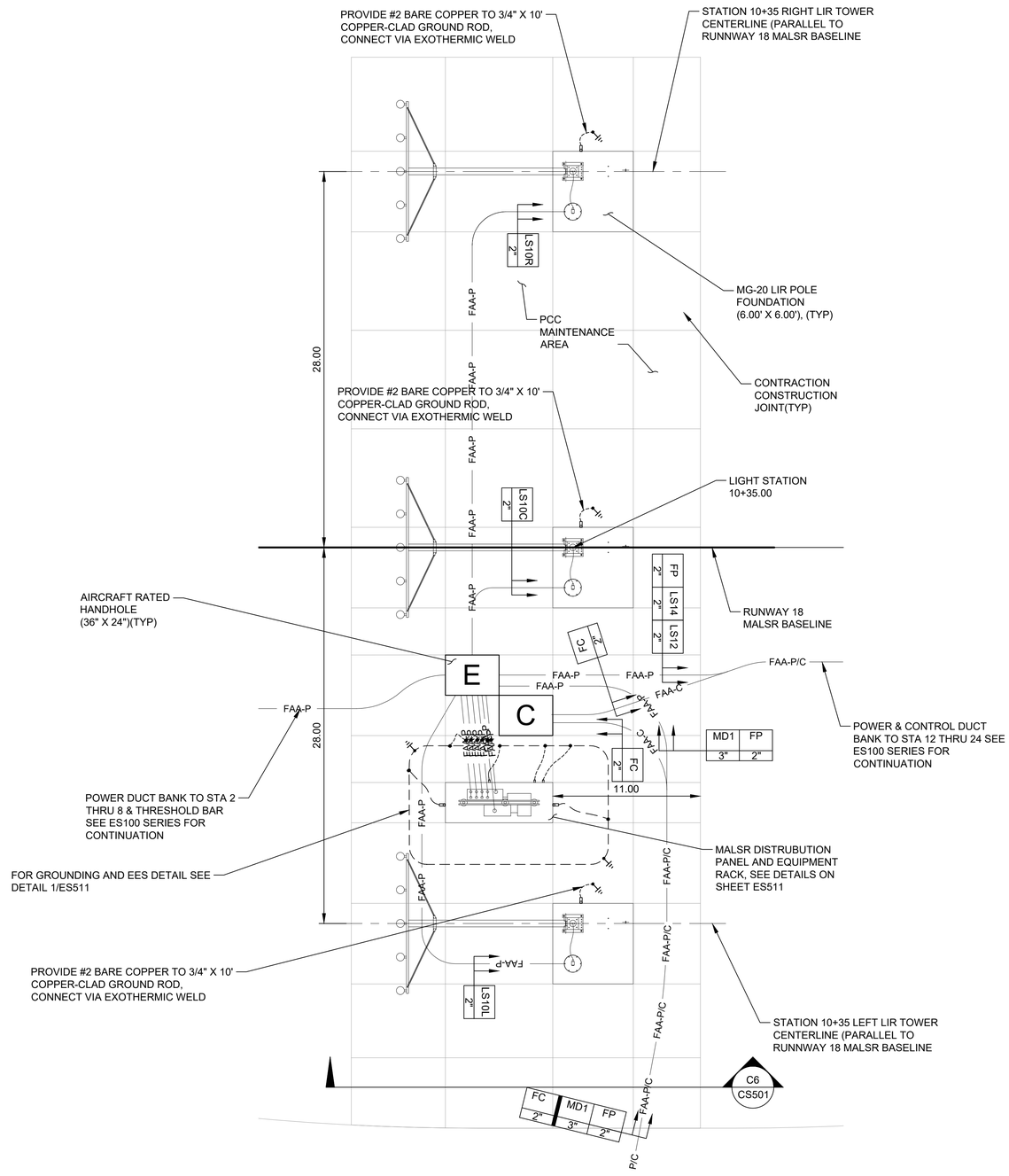

MALSR LIGHT STATION 10+35.00 ENLARGED PLAN

1" = 5'

N

0 2.5 5 10

SCALE: 1 INCH = 5 FEET

NOTES

1. REFER TO SHEET ES101 FOR MALSR CIRCUIT SCHEDULE.
2. REFER TO SHEET G-003 FOR GENERAL NOTES, ABBREVIATIONS, AND LEGEND.
3. THE CONTRACTOR SHALL COMPLY WITH FAA "LOCK-OUT/TAG-OUT" PROCEDURES AND NFPA 70E.
4. ALL CONTRACTOR PROVIDED MATERIALS SHALL MEET ALL APPLICABLE FAA SPECIFICATIONS AND REQUIREMENTS INCLUDING BUT NOT LIMITED TO FAA-C-1391, FAA-STD-19, AND FAA-C-1217 LATEST VERSION.

FOR OFFICIAL USE ONLY

PUBLIC AVAILABILITY TO BE DETERMINED UNDER 5 USC 552

JACOBS
1100 N GLEBE RD.
SUITE 500
ARLINGTON, VA 22201

REV.	APPROVED DATE	DESCRIPTION	JCN	REDLINE DATE	APVD

DEPARTMENT OF TRANSPORTATION
FEDERAL AVIATION ADMINISTRATION
CENTRAL SERVICE AREA — FORTH WORTH, TX

MALSR
REPLACEMENT RUNWAY 18

ELECTRICAL SITE PLAN ENLARGED VIEWS

HOUMA — HOUMA-TERREBONNE AIRPORT — LA

HOUMA-TERRABONNE AIRPORT
HOUMA, LOUISIANA

JAMES A MCDONALD LICENSE No 77395 STATE OF LOUISIANA PROFESSIONAL ENGINEER 7.16.25

REVIEWED BY	SUBMITTED BY		APPROVED BY
	SUBMITTER'S TITLE		APPROVER'S TITLE
	DESIGNED BY R. GARCIA	ISSUED BY: ENGINEERING SERVICES NAVAIDS	DATE 07-16-25 JCN: 22001835
	DRAWN BY R. GARCIA		DRAWING NO. HUM-D-MALSR-ES401 REV.
	CHECKED BY J. MCDONALD		

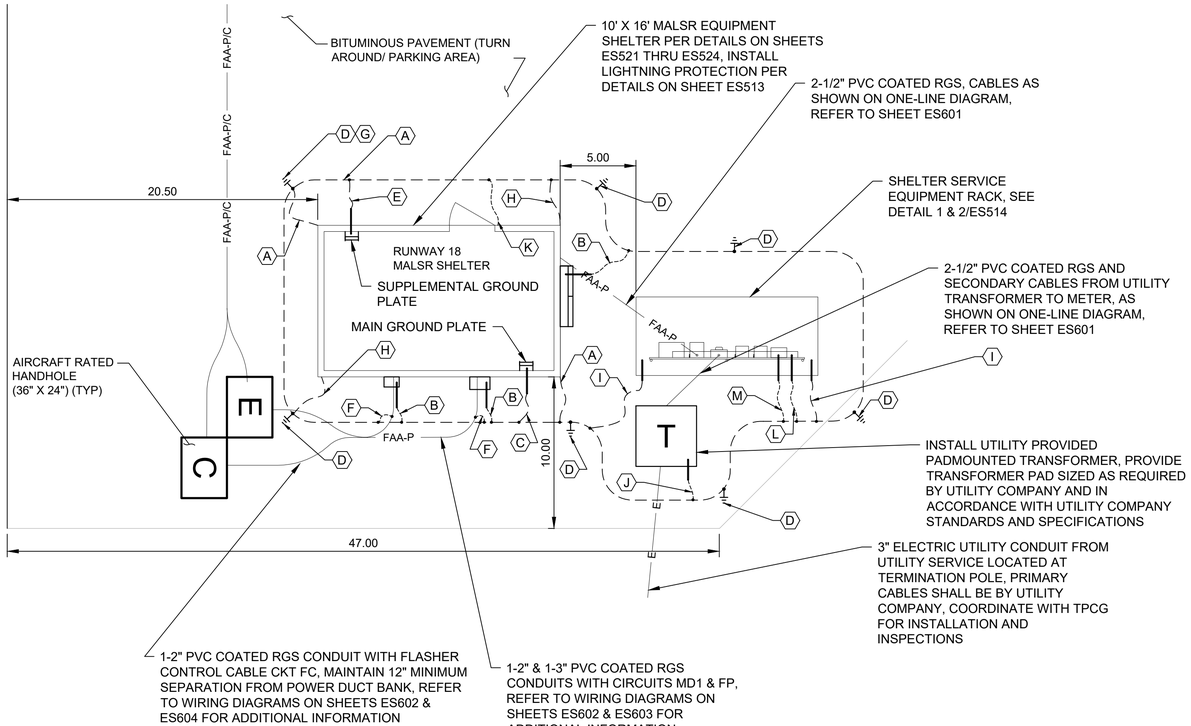

MALSR SHELTER AREA ENLARGED PLAN
1"=5'

KEYED NOTES:

A. #4/0 BARE STRANDED COPPER GROUND WIRE FROM SHELTER LIGHTNING PROTECTION TO EES (2 PLACES). REFER TO DETAIL D/ES513 FOR ADDITIONAL INFORMATION.

B. #2 BARE STRANDED COPPER FROM JUNCTION BOX TO EES.

C. 500MCM MAIN GROUND FROM MAIN GROUND PLATE.

D. 3/4" X 10' COPPER-CLAD STEEL GROUND ROD.

E. 500MCM MAIN GROUND FROM SUPPLEMENTAL GROUND PLATE.

F. BOND PVC COATED RGS CONDUIT(S) TO EES VIA #2 BARE STRANDED COPPER BONDING JUMPER.

G. GROUNDING ACCESS WELL, SEE DETAIL 3 THIS SHEET.

H. #4/0 BARE STRANDED COPPER GROUND WIRE FROM SHELTER FOUNDATION STRUCTURAL STEEL TO EES (2 PLACES), SEE DETAIL 1 THIS SHEET.

I. #4/0 BARE STRANDED COPPER GROUND WIRE FROM SHELTER SERVICE EQUIPMENT RACK LIGHTNING PROTECTION TO EES (2 PLACES).

J. #4/0 BARE STRANDED COPPER GROUND WIRE FROM UTILITY TRANSFORMER TO EES.

K. #2 BARE STRANDED COPPER FROM DOOR FRAME TO EES SEE DETAIL 2 THIS SHEET.

L. #1/0 STRANDED GREEN COPPER GROUND FROM SERVICE ENTRANCE DISCONNECT TO GROUND BUS TO EES.

M. #4/0 BARE STRANDED COPPER FROM SPD TO EES.

NOTES:

1. ALL TRENCHES OR EXCAVATED SURFACES SHALL BE COMPLETELY BACKFILLED AND TAMPED LEVEL WITH THE ADJACENT SURFACE. PER FAA-C-1391 LATEST VERSION, BACKFILLING REQUIREMENT.
2. ALL CABLES INSIDE HANDHOLES SHALL HAVE CABLE TAGS LABELED TO THEIR DESIGNATED LIGHT STATION. CABLE ID TAGS SHALL BE PER DETAIL 1/ES503.
3. EARTH ELECTRODE SYSTEM (EES) SHALL BE LOCATED BETWEEN 2' AND 6' FROM FOUNDATIONS.
4. EES SHALL BE 30" BELOW FINISHED GRADE. ALL CONNECTIONS TO EES SHALL BE VIA EXOTHERMIC WELDS ONLY.
5. CONSTRUCT ELECTRIC UTILITY INFRASTRUCTURE IN ACCORDANCE WITH TPCG STANDARDS AND SPECIFICATIONS OR AS NOTED ON THIS DRAWING. COORDINATE INSTALLATION OF ALL ELECTRIC UTILITY INFRASTRUCTURE WITH TPCG. PERFORM SITE INSPECTIONS AS REQUIRED PRIOR TO BACKFILLING TRENCH AND PRIOR TO INSTALLING UTILITY TRANSFORMER ON TRANSFORMER PAD.
6. REFER TO SHEET ES513 FOR MALSR SHELTER LIGHTNING PROTECTION DETAILS.

ITEM NO.	DESCRIPTION
1	T&B PART NUMBER 256-30695-252 (# 6 AWG CONDUCTOR)
2	T&B PART NUMBER 256-30695-1185 (# 2 AWG CONDUCTOR)
3	T&B PART NUMBER 54209 (# 1/0 AWG CONDUCTOR)
4	T&B PART NUMBER 54210 (# 2/0 AWG CONDUCTOR)
5	T&B PART NUMBER 54212 (# 4/0 AWG CONDUCTOR)
6	T&B PART NUMBER 54213 (# 250 KCMIL CONDUCTOR)
7	T&B PART NUMBER 54218 (# 500 KCMIL CONDUCTOR)

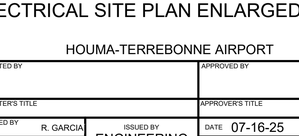

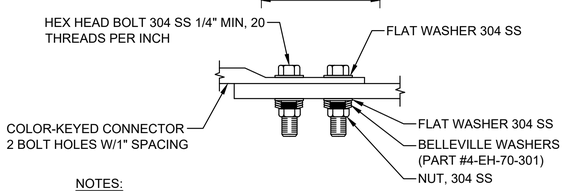

NOTES:

1. ALL EXTERIOR HARDWARE SHALL BE 304 SS UNLESS OTHERWISE NOTED.
2. TREAT CONTACT SURFACES WITH AN APPROVED ANTI-OXIDANT COMPOUND PRIOR TO INSTALLATION.
3. REFERENCE FAA-STD-019 LATEST VERSION REGARDING BOLT SIZE, WASHERS REQUIRED QUANTITY, AND TORQUE SPEC ON "TABLE 2" SECTION 4.2.3.4.2 "BOLTED CONNECTIONS".

4 / ES402 BOLTED GROUND CONNECTIONS DETAIL
SCALE: NTS

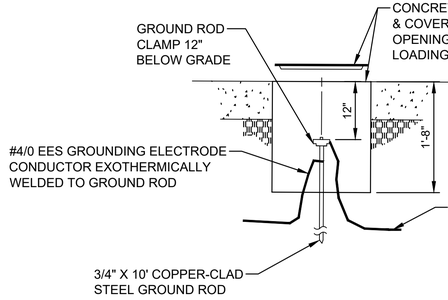

3 / ES402 GROUNDING ACCESS WELL DETAIL
SCALE: NTS

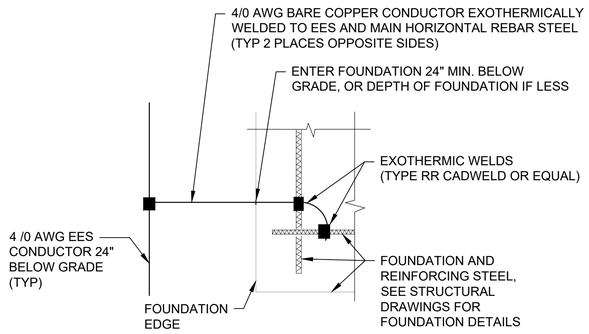

1 / ES402 SHELTER FOUNDATION GROUNDING DETAIL
SCALE: NTS

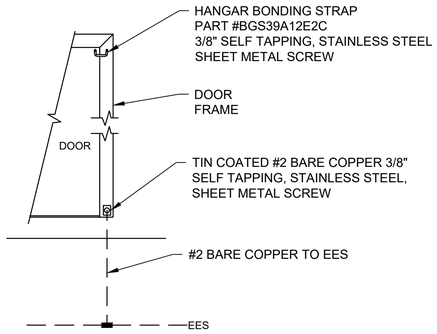

2 / ES402 DOOR FRAME GROUNDING DETAIL
SCALE: NTS

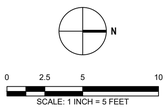

FOR OFFICIAL USE ONLY
PUBLIC AVAILABILITY TO BE DETERMINED UNDER 5 USC 552

JAMES A. MCDONALD LICENSE No 77395 7.16.25 STATE OF LOUISIANA PROFESSIONAL ENGINEER

JACOBS
1100 N GLEBE RD.
SUITE 500
ARLINGTON, VA 22201

Jacobs

HOUMA-TERRABONNE AIRPORT
HOUMA, LOUISIANA

REV.	APPROVED DATE	DESCRIPTION	JCN	REDLINE DATE	APVD

DEPARTMENT OF TRANSPORTATION
FEDERAL AVIATION ADMINISTRATION
CENTRAL SERVICE AREA — FORTH WORTH, TX

MALSR
REPLACEMENT RUNWAY 18

ELECTRICAL SITE PLAN ENLARGED VIEWS

HOUMA — HOUMA-TERREBONNE AIRPORT — LA

REVIEWED BY	SUBMITTED BY	APPROVED BY
	SUBMITTER'S TITLE	APPROVER'S TITLE
	DESIGNED BY R. GARCIA	ISSUED BY: ENGINEERING SERVICES NAVAIDS
	DRAWN BY R. GARCIA	DATE 07-16-25 JCN: 22001835
	CHECKED BY J. MCDONALD	DRAWING NO. HUM-D-MALSR-ES402 REV.

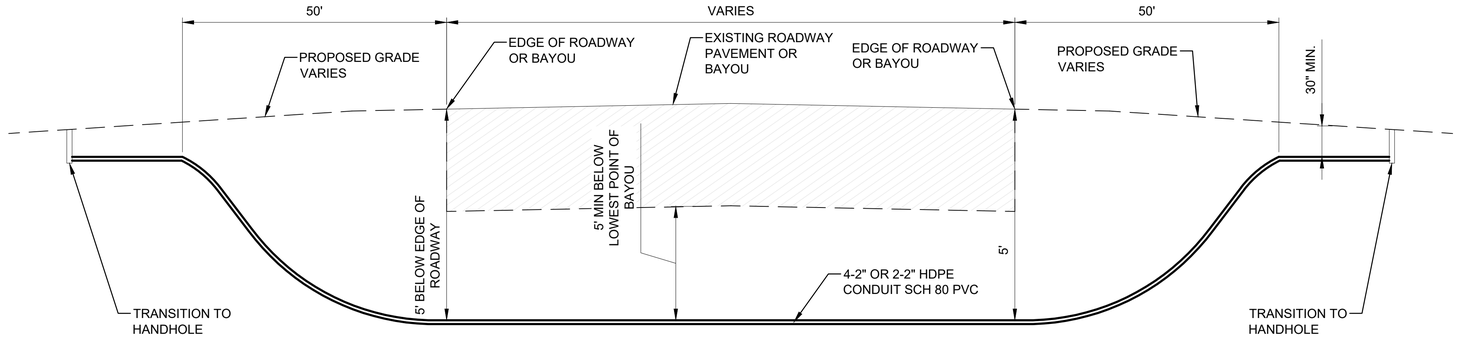

1 ES501 DIRECTIONAL BORED CONDUIT PROFILE DETAIL
SCALE: NTS

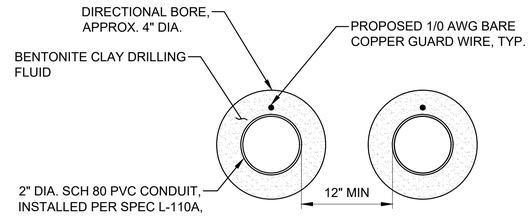

2 ES501 TYPICAL DUCT SECTION - DIRECTIONAL BORE
SCALE: NTS

DIRECTIONAL DRILLING NOTES:

1. THE GUIDANCE SYSTEM SHALL BE OF A PROVEN TYPE AND SHALL BE SET UP AND OPERATED BY PERSONNEL EXPERIENCED WITH THIS SYSTEM. THE OPERATOR SHALL BE AWARE OF ANY MAGNETIC ANOMALIES AND SHALL CONSIDER SUCH INFLUENCES IN THE OPERATION OF THE GUIDANCE SYSTEM IF USING A MAGNETIC SYSTEM.
2. A SELF CONTAINED, CLOSED, DRILLING FLUID MIXING SYSTEM SHALL BE OF SUFFICIENT SIZE TO MIX AND DELIVER DRILLING FLUID COMPOSED OF BENTONITE CLAY, POTABLE WATER AND APPROPRIATE ADDITIVES. MIXING SYSTEM SHALL BE ABLE TO MOLECULARLY SHEAR INDIVIDUAL BENTONITE PARTICLES FROM THE DRY POWDER TO AVOID CLUMPING AND ENSURE THOROUGH MIXING. MIXING SYSTEM SHALL CONTINUALLY AGITATE THE DRILLING FLUID DURING DRILLING OPERATIONS.
3. DRILLING FLUID SHALL BE COMPOSED OF CLEAN WATER AND AN APPROPRIATE ADDITIVE. WATER SHALL BE FROM A CLEAN SOURCE WITH A PH OF 8.5 TO 10. WATER OF A LOWER PH OR WITH EXCESSIVE CALCIUM SHALL BE TREATED WITH THE APPROPRIATE AMOUNT OF SODIUM CARBONATE OR EQUAL. THE WATER AND ADDITIVES SHALL BE MIXED THOROUGHLY AND BE ABSENT OF ANY CLUMPS OR CLODS. NO HAZARDOUS ADDITIVES MAY BE USED. DRILLING FLUID SHALL BE MAINTAINED AT A VISCOSITY SUFFICIENT TO SUSPEND CUTTINGS AND MAINTAIN THE INTEGRITY OR BORE WALL.
4. DRILLING OPERATIONS ON THE SURFACE SHALL BE NO LESS THAN TEN FEET (10') FROM THE EDGE OF A RUNWAY OR TAXIWAY, OR AS REQUIRED BY THE DRAWINGS AND PERMITS, UNLESS APPROVED BY THE RPR.
5. THE ENTIRE DRILL PATH SHALL BE ACCURATELY SURVEYED WITH ENTRY AND EXIT STAKES PLACED IN THE APPROPRIATE LOCATIONS. IF THE CONTRACTOR IS USING A MAGNETIC GUIDANCE SYSTEM, THE DRILL PATH WILL BE SURVEYED FOR ANY SURFACE GEO-MAGNETIC VARIATIONS OR ANOMALIES.
6. THE INITIAL BORE ANGLE SHALL BE SUCH THAT THE RESULTANT CONDUIT PATH YIELDS A POSITIVE DRAINAGE PATH TO PREVENT THE ACCUMULATION OF WATER AND DEBRIS.
7. A PILOT HOLE SHALL BE DRILLED ON THE BORE PATH WITH NO DEVIATIONS GREATER THAN 5% OF DEPTH OVER A LENGTH OF 100 FEET. IN THE EVENT THAT THE PILOT HOLE DOES DEVIATE FROM THE BORE PATH MORE THAN 5% OF DEPTH IN 100 FEET, THE CONTRACTOR WILL NOTIFY THE ENGINEER AND THE ENGINEER MAY REQUIRE THE CONTRACTOR TO PULL BACK AND RE-DRILL FROM THE LOCATION ALONG THE BORE PATH BEFORE THE DEVIATION.
8. THE CONTRACTOR SHALL MAINTAIN A DAILY PROJECT LOG OF DRILLING OPERATIONS AND A GUIDANCE SYSTEM LOG WITH A COPY GIVEN TO THE ENGINEER AT THE COMPLETION OF THE PROJECT. AS-BUILT DRAWINGS SHALL BE CERTIFIED AS TO ACCURACY BY THE CONTRACTOR.
9. THE GUARD WIRE CONDUCTOR SHALL BE TERMINATED ON A GROUND ROD AT THE BEGINNING AND END OF THE DIRECTIONAL DRILLING SECTION OF A DUCT BANK RUN.
10. DIRECTIONAL BORING PROFILE SHALL APPLY FOR ALL AREAS NOTED ON THE PLANS, INCLUDING PIPE, CONCRETE DITCH, SWALE CROSSING, ROADWAY CROSSING, AND FENCE CROSSINGS.
11. 5' IS A GENERALIZATION FOR BORING DEPTH, THERE MAY BE CIRCUMSTANCES WHERE A DIFFERENT DEPTH MAY REQUIRE TO ARCHIVE RESULTS LAID OUT IN PROFILE OF THE CONDUITS DUE TO EXISTING UTILITIES IN THE IMMEDIATE AREA. THE BORE SHALL BE 5' MINIMUM BELOW THE LOWEST POINT OF THE BAYOU.

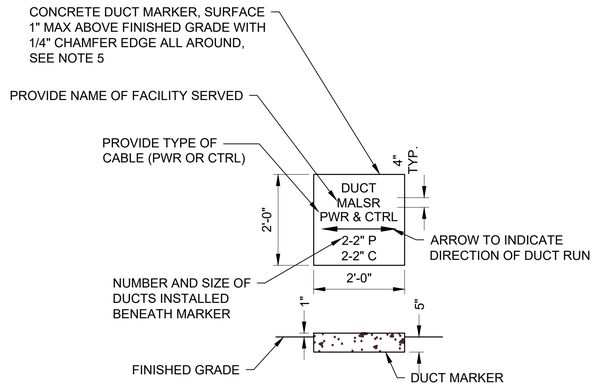

DUCT MARKER NOTES:

1. CONCRETE MARKERS SHALL BE INSTALLED EVERY 200 FEET AND SHALL ALSO BE PLACED AT ALL DUCT CROSSINGS, END OF STUB OUTS, AND ANY CHANGE IN DIRECTION.
2. EDGE EXPOSED CONCRETE WITH A 1/4" RADIUS TOOL.
3. LEGEND INSCRIBED BY HAND IN WET CONCRETE WILL NOT BE ACCEPTABLE.
4. CONCRETE MARKERS SHALL HAVE LETTERS 4" HIGH, 3" WIDE WITH WIDTH OF STROKE AND 1/2" DEEP. ALL LETTERS, NUMBERS AND ARROWS TO BE IMPRESSED.
5. CONCRETE SHALL HAVE A COMPRESSIVE STRENGTH OF NOT LESS THAN 277 MPA (4,000 PSI) AND HAVE A SMOOTH, TROWELED FINISH ON THE EXPOSED SURFACE. AFTER THE CONCRETE MARKER HAS SET A MINIMUM OF 24 HOURS, THE TOP SURFACE SHALL BE PAINTED AVIATION ORANGE WITH PAINT MANUFACTURED SPECIFICALLY FOR UNCURED EXTERIOR CONCRETE. MARKERS SHALL NOT BE INSTALLED IN CONCRETE OR ASPHALT SURFACES.
6. FAA CONCRETE DUCT MARKER SHALL BE IN ACCORDANCE WITH FAA-C-1391F.
7. COST OF CONCRETE MARKERS IS INCIDENTAL TO THE ASSOCIATED ITEMS OF DUCT OR CABLE.

3 ES501 FAA CONCRETE DUCT MARKER DETAIL
SCALE: NTS

FOR OFFICIAL USE ONLY
PUBLIC AVAILABILITY TO BE DETERMINED UNDER 5 USC 552

JAMES A MCDONALD LICENSE No 77395 STATE OF LOUISIANA PROFESSIONAL ENGINEER 7.16.25

JACOBS
1100 N GLEBE RD.
SUITE 500
ARLINGTON, VA 22201

Jacobs

HOUMA-TERRABONNE AIRPORT
HOUMA, LOUISIANA

REV.	APPROVED DATE	DESCRIPTION	JCN	REDLINE DATE	APVD

DEPARTMENT OF TRANSPORTATION
FEDERAL AVIATION ADMINISTRATION
CENTRAL SERVICE AREA — FORTH WORTH, TX

MALSR
REPLACEMENT RUNWAY 18

MALSR GENERAL INFRASTRUCTURE DETAILS 1

HOUMA — HOUMA-TERREBONNE AIRPORT — LA

REVIEWED BY	SUBMITTED BY	APPROVED BY
	SUBMITTER'S TITLE	APPROVER'S TITLE
	DESIGNED BY R. GARCIA	ISSUED BY ENGINEERING SERVICES NAVAIDS
	DRAWN BY R. GARCIA	DATE 07-16-25 JCN: 22001835
	CHECKED BY J. MCDONALD	DRAWING NO. HUM-D-MALSR-ES501 REV.

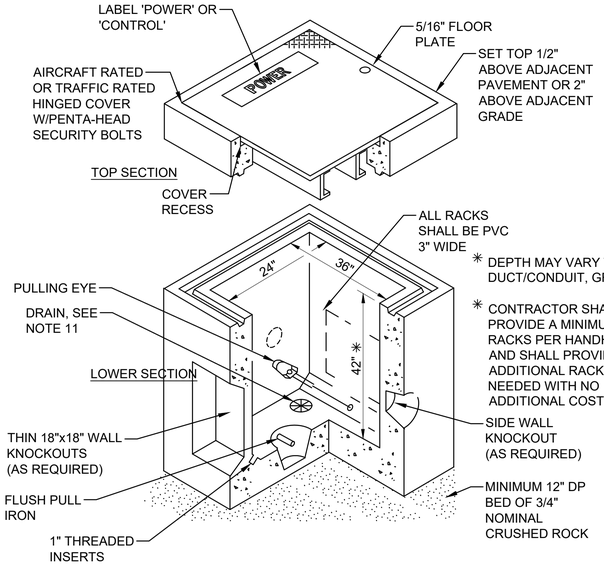

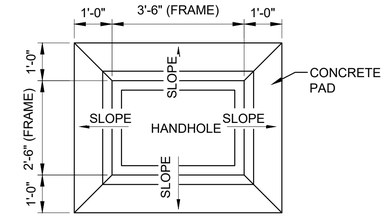

HANDHOLE PLAN VIEW

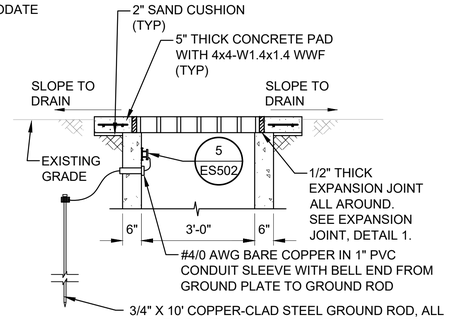

HANDHOLE SECTION 'A'

1 ES502 FAA CONCRETE HANDHOLE DETAILS
SCALE: NTS

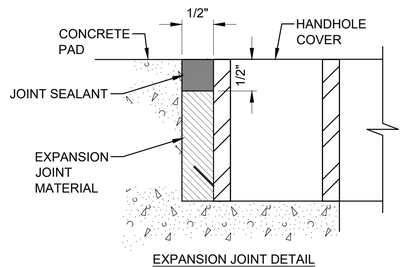

EXPANSION JOINT DETAIL

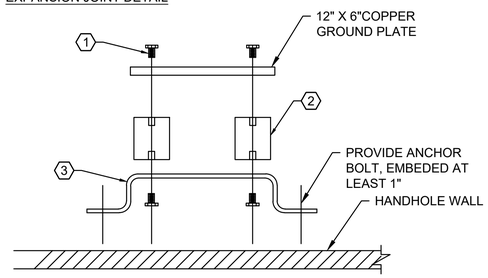

BRACKET ASSEMBLY PARTS LIST		
ITEM	DESCRIPTION	QTY
1	1/4"-20 x 1/2" S.S HEX BOLT	4
2	INSULATOR 2 1/2 " HIGH 1" DIA.	4
3	GROUND PLATE LEG 6 1/2" x 3/16" x 1" STOCK BRIGHT ZINC FINISH	2

5 ES502 HANDHOLE GROUND PLATE DETAIL
SCALE: NTS

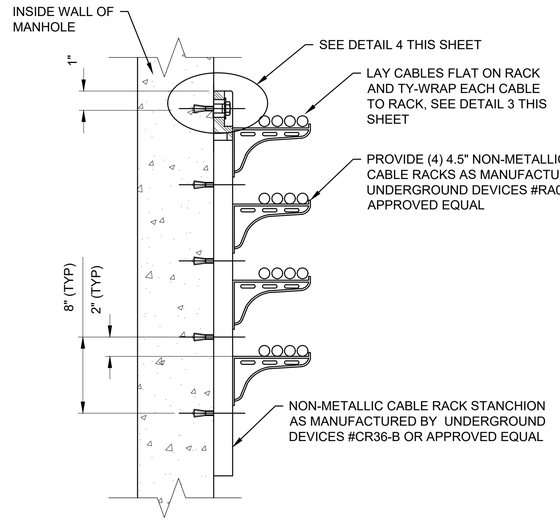

2 ES502 CABLE RACK INSTALLATION DETAIL
SCALE: NTS

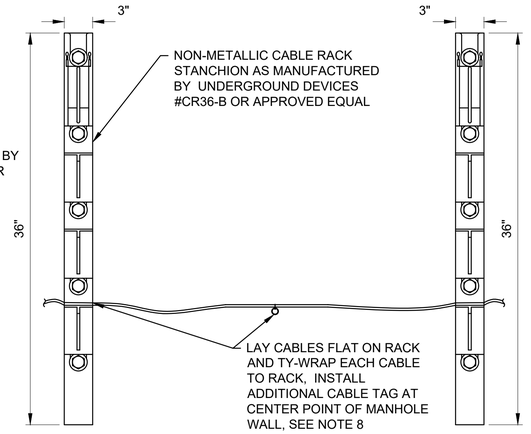

3 ES502 CABLE RACKING DETAIL
SCALE: NTS

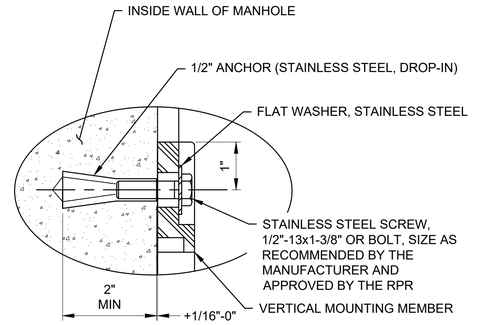

4 ES502 CABLE RACK WALL PENETRATION DETAIL
SCALE: NTS

CONCRETE HANDHOLE NOTES:

1. CONTRACTOR SHALL SUBMIT DETAILED SHOP DRAWINGS FROM HANDHOLE FABRICATOR SHOWING PLACEMENT AND SIZE OF REINFORCEMENT STEEL AND THICKNESS OF HANDHOLE WALL, BOTTOM, AND TOP. SUBMITTAL SHALL INCLUDE CALCULATIONS SEALED BY A LICENSED STRUCTURAL ENGINEER IN THE STATE OF LOUISIANA.
2. ALL HANDHOLES SHALL CONFORM TO LATEST FAA, ASTM, AND AASHTO SPECIFICATIONS. HAND HOLES SHALL HAVE ADEQUATE DRAINAGE. HANDHOLES SHALL BE APPROVED BY RPR. ALL HANDHOLES SHALL BE AIRCRAFT WEIGHT BEARING UNLESS OTHERWISE INDICATED ON ES100 SERIES DRAWINGS.
3. AIRCRAFT RATED HANDHOLES SHALL BE 24"x36"x42" D PRECAST CONCRETE, AIRCRAFT LOAD RATED, EXTRA HEAVY-DUTY, (OLDCASTLE PRECAST INC. OR APPROVED EQUAL) WITH GALVANIZED, AIRCRAFT LOAD RATED BOLT-DOWN FRAME WITH HINGED AND TORSIONED SPRING ASSIST DOOR ASSEMBLY (INWESCO OR APPROVED EQUAL).
4. VEHICLE RATED HANDHOLES SHALL BE 24"x36"x42" D PRECAST CONCRETE, H-20 LOAD RATED, EXTRA HEAVY-DUTY, (OLDCASTLE PRECAST INC. OR APPROVED EQUAL) WITH GALVANIZED, H-20 LOAD RATED BOLT-DOWN FRAME WITH HINGED AND TORSIONED SPRING ASSIST DOOR ASSEMBLY (INWESCO OR APPROVED EQUAL). H-20 LOAD RATING SHALL BE IN ACCORDANCE WITH AASHTO M-306.
5. FURNISH AND INSTALL A GROUND LUG ON FRAME AND COVER INSIDE THE HANDHOLE. HANDHOLE LID SHALL BE MARKED FAA POWER. SEE NOTE 8 FOR BONDING JUMPER REQUIREMENTS.
6. ALL MATERIALS AND ASSOCIATED HARDWARE IN THE HANDHOLES SHALL BE NON-CORROSIVE MATERIALS.
7. CONTRACTOR SHALL GRADE AROUND HANDHOLES AS NECESSARY TO PREVENT SILT/DIRT INFILTRATION INTO HANDHOLES. NO SEPARATE PAYMENT SHALL BE MADE.
8. ALL METALLIC OBJECTS WITHIN HANDHOLE SHALL BE BONDED TO THE 12"X 6" COPPER GROUND PLATE VIA A #2 AWG INSULATED GREEN BONDING JUMPER. ALL METALLIC CONDUITS SHALL BE INSTALLED WITH INSULATED GROUNDING BUSHINGS WITHIN HANDHOLE BONDED TO THE GROUND PLATE.
9. ALL TRENCHES OR EXCAVATED SURFACES SHALL BE COMPLETELY BACKFILLED AND TAMPED LEVEL WITH THE ADJACENT SURFACE. PER FAA-C-1391F OR LATER, BACKFILLING REQUIREMENT.
10. PROVIDE (2) CABLE TAGS PER CABLE WITHIN EACH HANDHOLE. CABLE TAGS SHALL BE LABELED TO THEIR DESIGNATED LIGHT STATION. CABLE ID TAGS SHALL BE PER DETAIL 1/ES503.
11. PROVIDE DRAIN WITH CONE GRATE.
12. ALL CABLES MUST HAVE A LOOP OF AT LEAST 10' OF SLACK PER CABLE NEATLY RACKED.

FOR OFFICIAL USE ONLY
PUBLIC AVAILABILITY TO BE DETERMINED UNDER 5 USC 552

JAMES A MCDONALD LICENSE No 77395 STATE OF Florida PROFESSIONAL ENGINEER
7/16/25

JACOBS
1100 N GLEBE RD.
SUITE 500
ARLINGTON, VA 22201

Jacobs

HOUMA-TERRABONNE AIRPORT
HOUMA, LOUISIANA

REV.	APPROVED DATE	DESCRIPTION	JCN	REDLINE DATE	APVD

DEPARTMENT OF TRANSPORTATION
FEDERAL AVIATION ADMINISTRATION
CENTRAL SERVICE AREA — FORTH WORTH, TX

MALSR
REPLACEMENT RUNWAY 18

MALSR GENERAL INFRASTRUCTURE DETAILS 2

HOUMA — HOUMA-TERREBONNE AIRPORT — LA

REVIEWED BY	SUBMITTED BY	APPROVED BY
	SUBMITTER'S TITLE	APPROVER'S TITLE
	DESIGNED BY R. GARCIA	ISSUED BY: ENGINEERING SERVICES NAVAIDS
	DRAWN BY R. GARCIA	DATE 07-16-25 JCN: 22001835
	CHECKED BY J. MCDONALD	DRAWING NO. HUM-D-MALSR-ES502 REV.

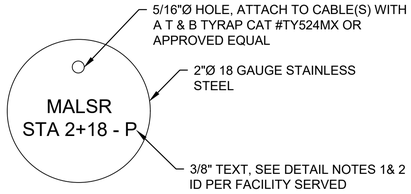

DETAIL NOTES:

1. ALL CABLES SHALL BE IDENTIFIED WITH A FACTORY ENGRAVED ID TAG WITH ITS RESPECTIVE MALSR STATION NUMBER AT ALL ACCESSIBLE LOCATIONS. ATTACH THE ID TAG WITHIN 12" OF THE ENTRANCE AND EXIT OF HANDHOLES, JUNCTION CANS, AND JUNCTION STRUCTURES. PROVIDE (2) CABLE TAGS PER CABLE WITHIN EACH HANDHOLE.
2. TAGS SHALL BE MARKED WITH THE NAME OF THE MALSR STATION SERVED BY THE CABLE PLUS THE LETTER "P" (POWER). WHERE MORE THAN ONE IDENTICAL CABLE IS USED TO SERVE THE SAME MALSR STATION, CABLES MAY BE BUNDLED UNDER ONE TAG UNLESS INDICATED OTHERWISE BY THE RPR.

1 ES503 FAA CABLE ID TAG DETAIL
SCALE: NTS

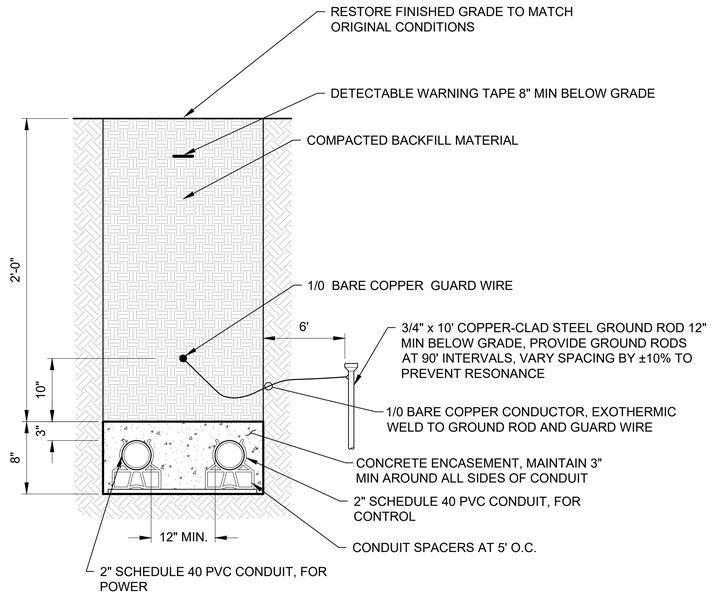

2 ES503 TYPICAL CONCRETE ENCASED DUCT BANK - POWER & CONTROL
SCALE: NTS

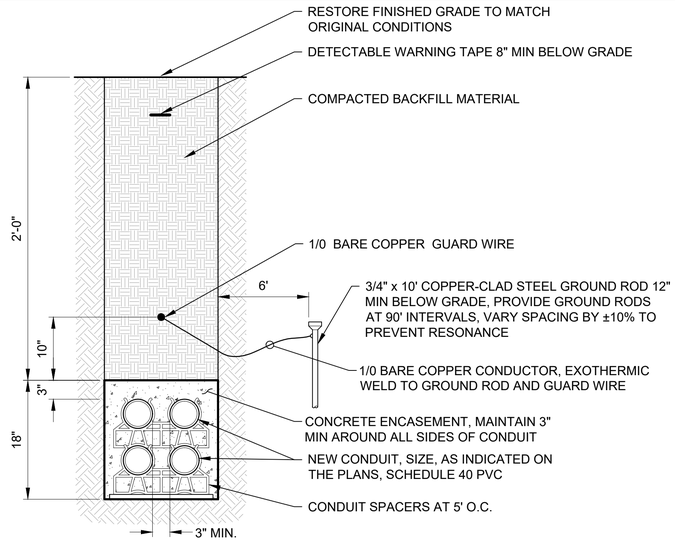

3 ES503 TYPICAL CONCRETE ENCASED DUCT BANK - POWER
SCALE: NTS

FOR OFFICIAL USE ONLY
PUBLIC AVAILABILITY TO BE DETERMINED UNDER 5 USC 552

JAMES A MCDONALD LICENSE No 77395 7.16.25 STATE OF LOUISIANA PROFESSIONAL ENGINEER

JACOBS
1100 N GLEBE RD.
SUITE 500
ARLINGTON, VA 22201

REV.	APPROVED DATE	DESCRIPTION	JCN	REDLINE DATE	APVD

Jacobs

DEPARTMENT OF TRANSPORTATION
FEDERAL AVIATION ADMINISTRATION
CENTRAL SERVICE AREA — FORTH WORTH, TX

MALSR
REPLACEMENT RUNWAY 18

FAA CONDUIT DETAILS

HOUMA — HOUMA-TERREBONNE AIRPORT — LA

HOUMA-TERRABONNE AIRPORT
HOUMA, LOUISIANA

REVIEWED BY	SUBMITTED BY	APPROVED BY
	SUBMITTER'S TITLE	APPROVER'S TITLE
	DESIGNED BY R. GARCIA	ISSUED BY ENGINEERING SERVICES NAVAIDS
	DRAWN BY R. GARCIA	DATE 07-16-25 JCN: 22001835
	CHECKED BY J. MCDONALD	DRAWING NO. HUM-D-MALSR-ES503 REV.

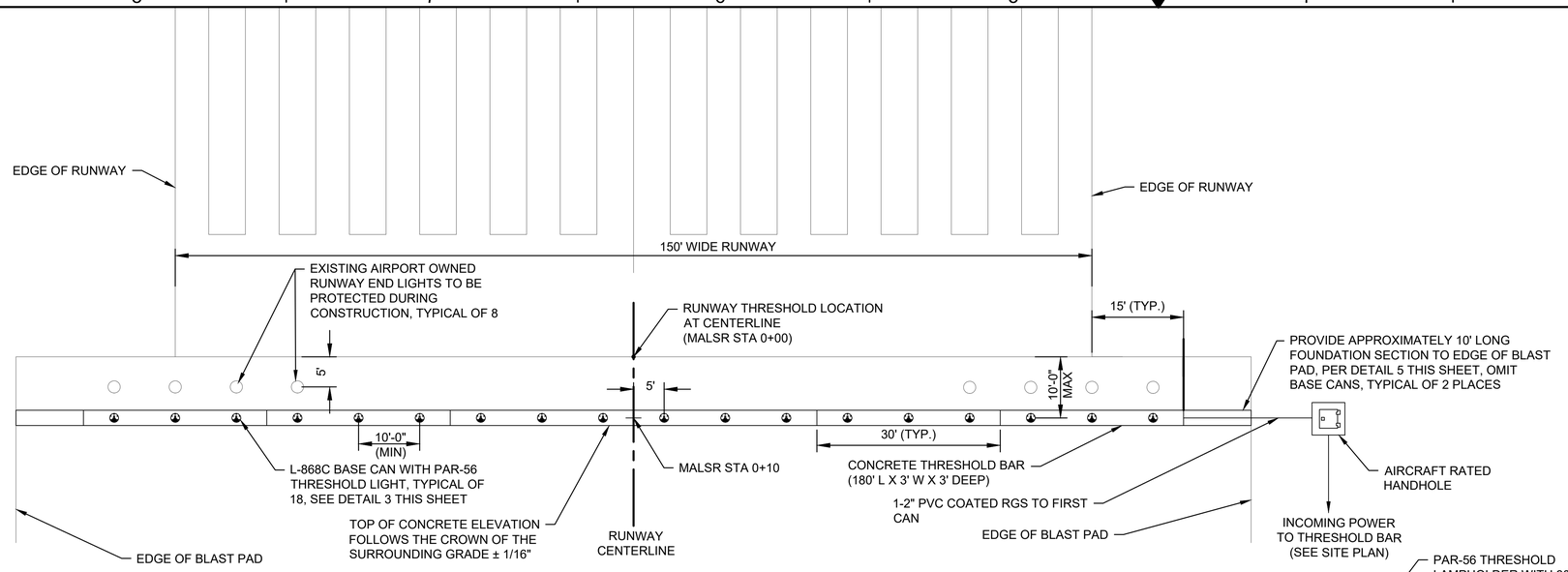

1 ES504 THRESHOLD BAR - PLAN VIEW DETAIL
SCALE: NTS

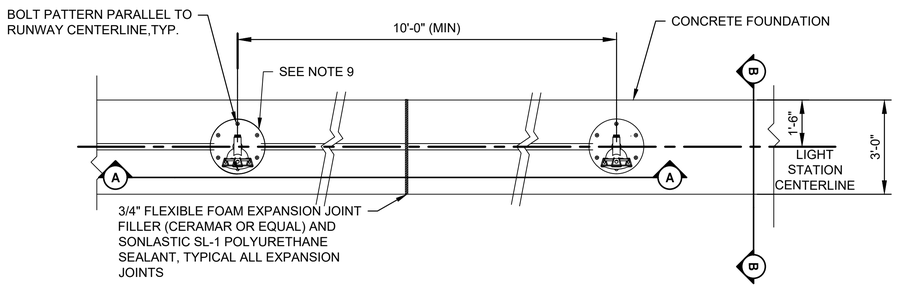

2 ES504 THRESHOLD BAR ENLARGED PLAN VIEW DETAIL
SCALE: NTS

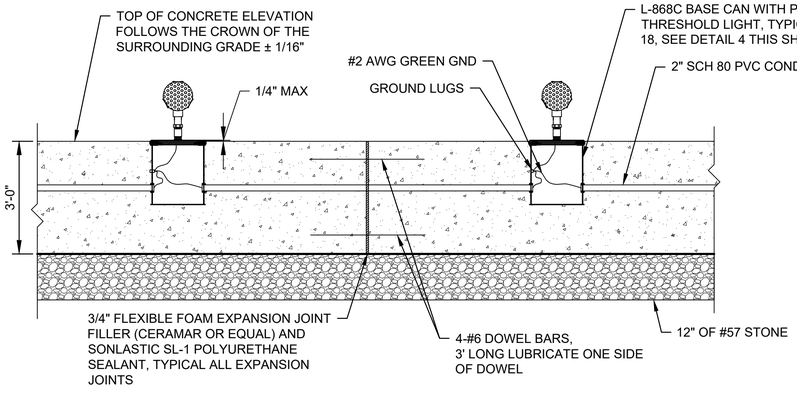

3 ES504 THRESHOLD BAR ELEVATION VIEW - SECTION A-A
SCALE: NTS

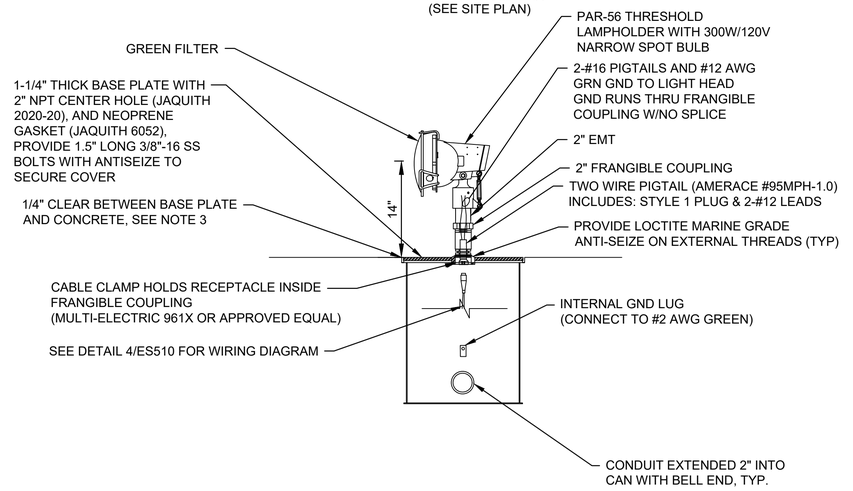

4 ES504 THRESHOLD BAR BASE CAN INSTALLATION SECTION B-B DETAIL
SCALE: NTS

NOTES:

1. CONCRETE FOUNDATIONS ARE A MINIMUM DEPTH OF 3'-0" FOR THE ENTIRE LENGTH OF THE LIGHT BAR AND INSTALLED PERPENDICULAR TO RUNWAY CENTERLINE.
2. LIGHT BASES ARE L-868C AND MUST CONFORM TO FAA ADVISORY CIRCULAR 150/5345-42 LATEST EDITION, "SPECIFICATION FOR AIRPORT LIGHT BASES AND TRANSFORMER HOUSINGS". TOLERANCE BETWEEN L-868C COVERPLATE AND FINISHED CONCRETE +1/4"/-0".
3. INSTALL P-605 SEALANT PER MANUFACTURERS INSTRUCTIONS.
4. PROVIDE 3' OF SLACK IN EACH CABLE AT EACH LIGHT TO PERMIT REMOVAL OF AND REPLACEMENT OF COVERPLATE.
5. FIELD ATTACHED CONNECTOR, AMERACE 90R/90P OR EQUAL L-823 PLUG AND RECEPTACLE (AC 150/5345-26, LATEST EDITION).
6. PROVIDE AN ID TAG WITH STATION AND AIMING ANGLE AT EACH END OF MALSR EMT LIGHT BAR. ID TAG MUST BE STAINLESS STEEL ENGRAVED MOUNTED WITH STAINLESS STEEL ZIP TIE PER DETAIL 7/ES507.
7. ALL MALSR FIXTURES, BASE CANS, CONNECTOR KITS, MOUNTING HARDWARE, CONDUIT, CABLES, AND FOUNDATION SHALL BE PROVIDED NEW.
8. ALL METALLIC OBJECTS WITHIN HANDHOLE SHALL BE BONDED TO THE 12"X 6" COPPER GROUND PLATE VIA A #2 AWG INSULATED GREEN BONDING JUMPER.
9. ALL TRENCHES OR EXCAVATED SURFACES SHALL BE COMPLETELY BACKFILLED AND TAMPED LEVEL WITH THE ADJACENT SURFACE. PER FAA-C-1391F OR LATER, BACKFILLING REQUIREMENT.
10. ALL CABLES INSIDE HANDHOLES SHALL HAVE CABLE TAGS LABELED TO THEIR DESIGNATED LIGHT STATION. CABLE ID TAGS SHALL BE PER DETAIL 1/ES503.
11. INSTALL MALS THRESHOLD LIGHTS TO A MAXIMUM OF 14" ABOVE RUNWAY THRESHOLD ELEVATION TO CENTER OF LAMP.
12. PROVIDE A LABEL WITH STATION AND AIMING ANGLE AT EACH END OF THE MALS THRESHOLD BAR.
13. ALL THREADED BOLT AND CONDUIT CONNECTIONS TO BE COATED IN LOCTITE MARINE GRADE ANTI-SEIZE OR APPROVED EQUAL.

FOR OFFICIAL USE ONLY
PUBLIC AVAILABILITY TO BE DETERMINED UNDER 5 USC 552

JAMES A MCDONALD LICENSE No 77395 STATE OF LOUISIANA PROFESSIONAL ENGINEER 7.16.25

JACOBS
1100 N GLEBE RD.
SUITE 500
ARLINGTON, VA 22201

REV.	APPROVED DATE	DESCRIPTION	JCN	REDLINE DATE	APVD

DEPARTMENT OF TRANSPORTATION
FEDERAL AVIATION ADMINISTRATION
CENTRAL SERVICE AREA — FORTH WORTH, TX

Jacobs

MALSR REPLACEMENT RUNWAY 18

MALSR THRESHOLD BAR DETAILS

HOUMA — HOUMA-TERREBONNE AIRPORT — LA

HOUMA-TERRABONNE AIRPORT
HOUMA, LOUISIANA

REVIEWED BY	SUBMITTED BY		APPROVED BY
	SUBMITTER'S TITLE		APPROVER'S TITLE
	DESIGNED BY R. GARCIA	ISSUED BY ENGINEERING SERVICES NAVAIDS	DATE 07-16-25 JCN: 22001835
	DRAWN BY R. GARCIA		DRAWING NO. HUM-D-MALSR-ES504 REV.
	CHECKED BY J. MCDONALD		

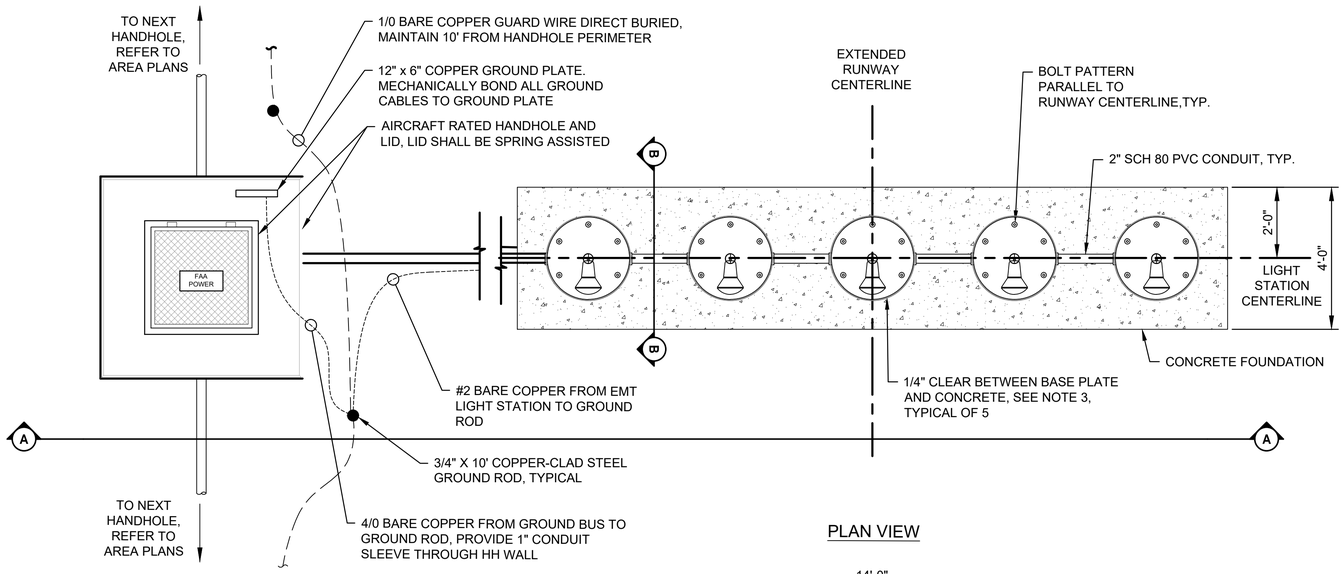

PLAN VIEW

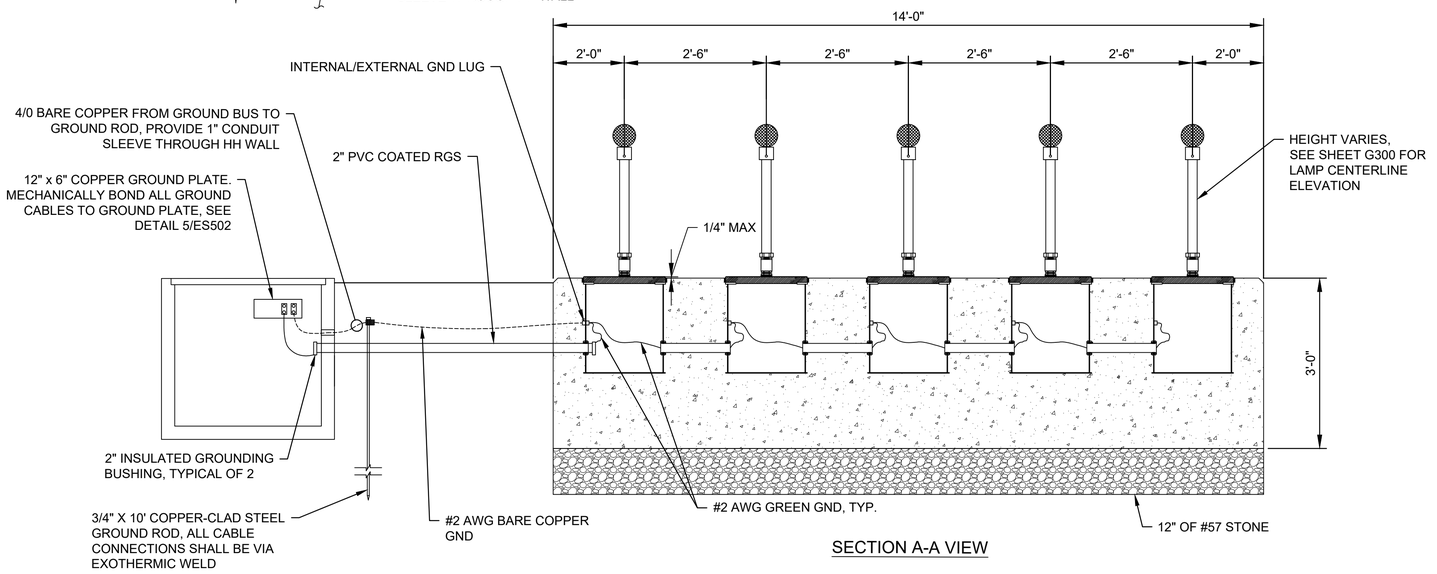

SECTION A-A VIEW

1 ES505 TYPICAL EMT MALSR LIGHT STATION INSTALLATION DETAILS
SCALE: NTS

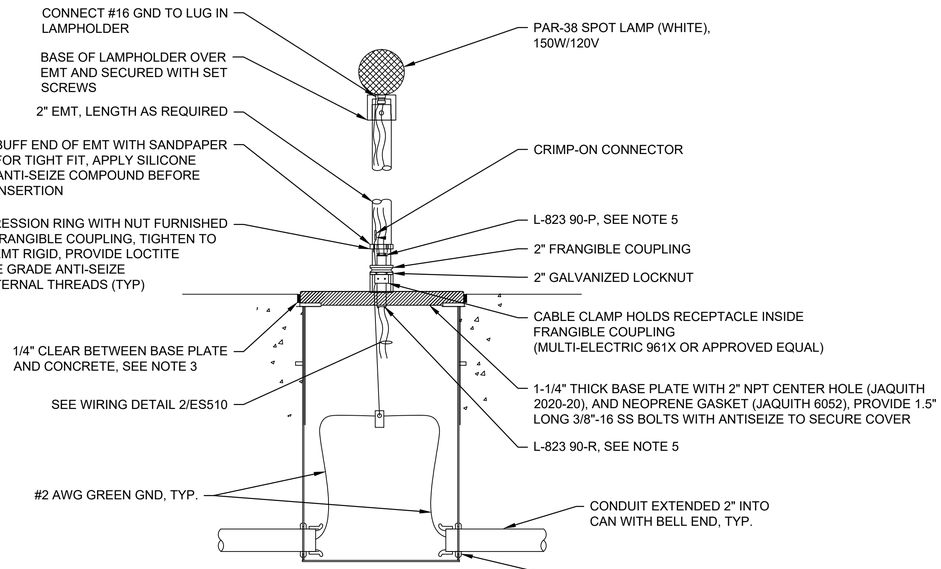

2 ES505 EMT MOUNTED MALSR STATION BASE CAN - SECTION B-B DETAIL
SCALE: NTS

NOTES:

1. CONCRETE FOUNDATIONS ARE A MINIMUM DEPTH OF 3'-0" FOR THE ENTIRE LENGTH OF THE LIGHT BAR AND INSTALLED PERPENDICULAR TO RUNWAY CENTERLINE.
2. LIGHT BASES ARE L-868C AND MUST CONFORM TO FAA ADVISORY CIRCULAR 150/5345-42 LATEST EDITION, "SPECIFICATION FOR AIRPORT LIGHT BASES AND TRANSFORMER HOUSINGS". TOLERANCE BETWEEN L-868C COVERPLATE AND FINISHED CONCRETE +1/4"/-0".
3. INSTALL P-605 SEALANT PER MANUFACTURERS INSTRUCTIONS.
4. PROVIDE 3' OF SLACK IN EACH CABLE AT EACH LIGHT TO PERMIT REMOVAL OF AND REPLACEMENT OF COVERPLATE.
5. FIELD ATTACHED CONNECTOR, AMERACE 90R/90P OR EQUAL L-823 PLUG AND RECEPTACLE (AC 150/5345-26, LATEST EDITION).
6. PROVIDE AN ID TAG WITH STATION AND AIMING ANGLE AT EACH END OF MALSR EMT LIGHT BAR. ID TAG MUST BE STAINLESS STEEL ENGRAVED MOUNTED WITH STAINLESS STEEL ZIP TIE PER DETAIL 7/ES507.
7. ALL MALSR FIXTURES, BASE CANS, CONNECTOR KITS, MOUNTING HARDWARE, CONDUIT, CABLES, AND FOUNDATION SHALL BE PROVIDED NEW.
8. ALL METALLIC OBJECTS WITHIN HANDHOLE SHALL BE BONDED TO THE 12"X 6" COPPER GROUND PLATE VIA A #2 AWG INSULATED GREEN BONDING JUMPER.
9. ALL TRENCHES OR EXCAVATED SURFACES SHALL BE COMPLETELY BACKFILLED AND TAMPED LEVEL WITH THE ADJACENT SURFACE. PER FAA-C-1391 LATEST VERSION, BACKFILLING REQUIREMENT.
10. PROVIDE (2) CABLE TAGS PER CABLE WITHIN EACH HANDHOLE. CABLE TAGS SHALL BE LABELED TO THEIR DESIGNATED LIGHT STATION. CABLE ID TAGS SHALL BE PER DETAIL 1/ES503.
11. ALL THREADED BOLT AND CONDUIT CONNECTIONS TO BE COATED IN LOCTITE MARINE GRADE ANTI-SEIZE OR APPROVED EQUAL.

FOR OFFICIAL USE ONLY
PUBLIC AVAILABILITY TO BE DETERMINED UNDER 5 USC 552

JACOBS
1100 N GLEBE RD.
SUITE 500
ARLINGTON, VA 22201

REV.	APPROVED DATE	DESCRIPTION	JCN	REDLINE DATE	APVD

DEPARTMENT OF TRANSPORTATION
FEDERAL AVIATION ADMINISTRATION
CENTRAL SERVICE AREA — FORTH WORTH, TX

Jacobs

MALSR
REPLACEMENT RUNWAY 18

MALSR EMT LIGHT STATION DETAILS

HOUMA — HOUMA-TERREBONNE AIRPORT — LA

JAMES A MCDONALD LICENSE No 77395 7/16/25 STATE OF LOUISIANA PROFESSIONAL ENGINEER

HOUMA-TERRABONNE AIRPORT
HOUMA, LOUISIANA

REVIEWED BY	SUBMITTED BY	APPROVED BY
	SUBMITTER'S TITLE	APPROVER'S TITLE
	DESIGNED BY R. GARCIA	ISSUED BY: ENGINEERING SERVICES NAVAIDS
	DRAWN BY R. GARCIA	DATE 07-16-25
	CHECKED BY J. MCDONALD	JCN: 22001835
		DRAWING NO. HUM-D-MALSR-ES505
		REV.

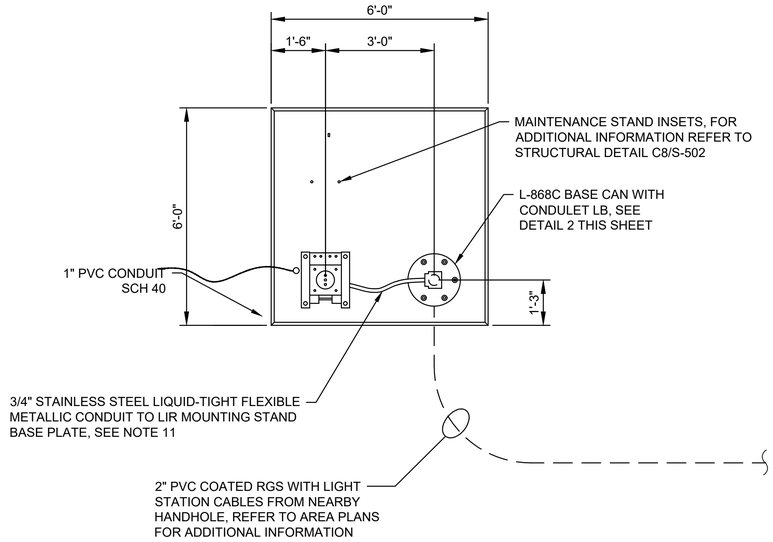

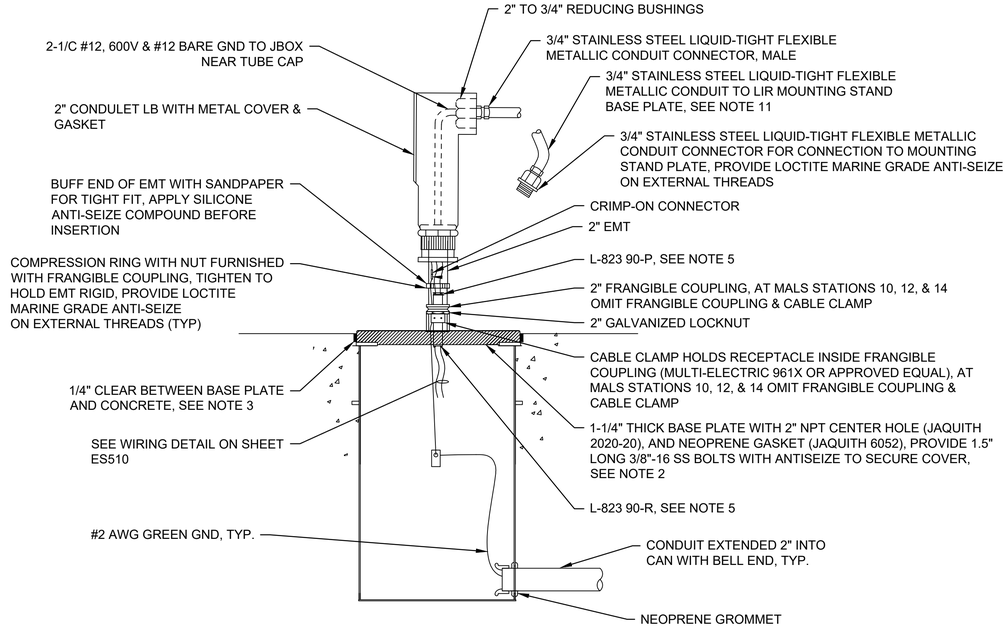

2 ES506 MG-20 LIR MALSR STATION BASE CAN - DETAIL
SCALE: NTS

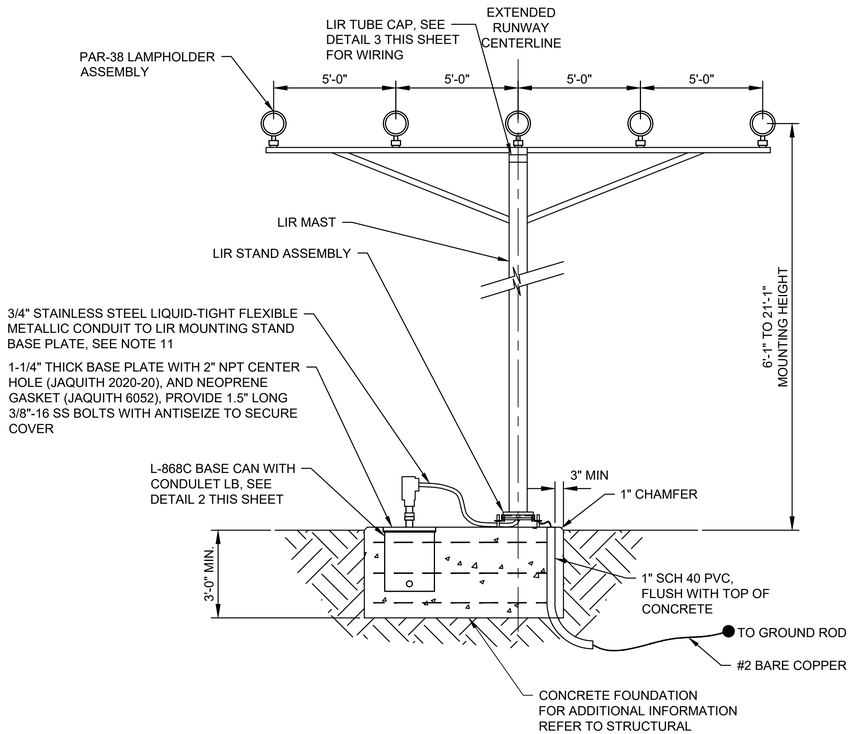

1 ES506 TYPICAL MG-20 LIR MALSR LIGHT STATION INSTALLATION DETAILS
SCALE: NTS

NOTES:

1. CONCRETE FOUNDATIONS ARE A MINIMUM DEPTH OF 3'-0" FOR THE ENTIRE LENGTH OF THE LIGHT BAR AND INSTALLED PERPENDICULAR TO RUNWAY CENTERLINE.
2. LIGHT BASES ARE L-868C AND MUST CONFORM TO FAA ADVISORY CIRCULAR 150/5345-42 LATEST EDITION, "SPECIFICATION FOR AIRPORT LIGHT BASES AND TRANSFORMER HOUSINGS". TOLERANCE BETWEEN L-868C COVERPLATE AND FINISHED CONCRETE +1/4"/-0".
3. INSTALL P-606 SEALANT PER MANUFACTURERS INSTRUCTIONS.
4. PROVIDE 3' OF SLACK IN EACH CABLE AT EACH LIGHT TO PERMIT REMOVAL OF AND REPLACEMENT OF COVERPLATE.
5. FIELD ATTACHED CONNECTOR, AMERACE 90R/90P OR EQUAL L-823 PLUG AND RECEPTACLE (AC 150/5345-26, LATEST EDITION).
6. PROVIDE AN ID TAG WITH STATION AND AIMING ANGLE AT EACH END OF MALSR EMT LIGHT BAR. ID TAG MUST BE STAINLESS STEEL ENGRAVED MOUNTED WITH STAINLESS STEEL ZIP TIE PER DETAIL 7/ES507.
7. ALL MALSR FIXTURES, BASE CANS, CONNECTOR KITS, MOUNTING HARDWARE, CONDUIT, CABLES, AND FOUNDATION SHALL BE PROVIDED NEW.
8. ALL METALLIC OBJECTS WITHIN HANDHOLE SHALL BE BONDED TO THE 12"X 6" COPPER GROUND PLATE VIA A #2 AWG INSULATED GREEN BONDING JUMPER.
9. ALL TRENCHES OR EXCAVATED SURFACES SHALL BE COMPLETELY BACKFILLED AND TAMPED LEVEL WITH THE ADJACENT SURFACE. PER FAA-C-1391 LATEST VERSION, BACKFILLING REQUIREMENT.
10. PROVIDE (2) CABLE TAGS PER CABLE WITHIN EACH HANDHOLE. CABLE TAGS SHALL BE LABELED TO THEIR DESIGNATED LIGHT STATION. CABLE ID TAGS SHALL BE PER DETAIL 1/ES503.
11. PROVIDE ENOUGH 3/4" STAINLESS STEEL LIQUIDTIGHT FLEXIBLE METALLIC CONDUIT TO ALLOW LOWERING OF TOWER.
12. ALL THREADED BOLT AND CONDUIT CONNECTIONS TO BE COATED IN LOCTITE MARINE GRADE ANTI-SEIZE OR APPROVED EQUAL.

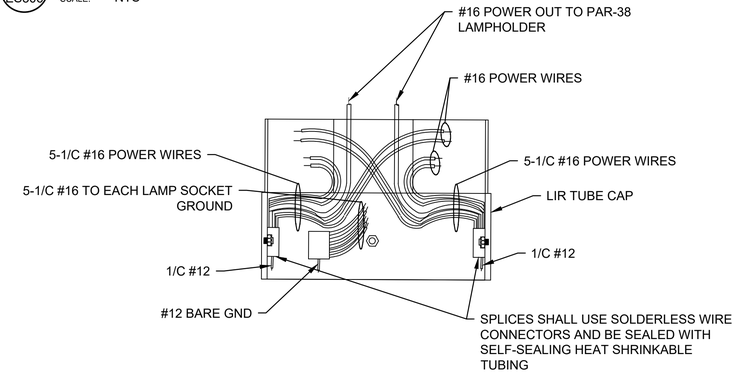

3 ES506 TYPICAL WIRING AT TUBE CAP AT TOP OF LIR MAST DETAIL
SCALE: NTS

FOR OFFICIAL USE ONLY
PUBLIC AVAILABILITY TO BE DETERMINED UNDER 5 USC 552

JAMES A MCDONALD LICENSE No 77395 7.16.25 STATE OF LOUISIANA PROFESSIONAL ENGINEER

JACOBS
1100 N GLEBE RD.
SUITE 500
ARLINGTON, VA 22201

REV.	APPROVED DATE	DESCRIPTION	JCN	REDLINE DATE	APVD

DEPARTMENT OF TRANSPORTATION
FEDERAL AVIATION ADMINISTRATION
CENTRAL SERVICE AREA — FORTH WORTH, TX

Jacobs

MALSR
REPLACEMENT RUNWAY 18

MALSR MG-20 LIGHT STATION DETAILS 1

HOUMA — HOUMA-TERREBONNE AIRPORT — LA

HOUMA-TERRABONNE AIRPORT
HOUMA, LOUISIANA

REVIEWED BY	SUBMITTED BY		APPROVED BY
	SUBMITTER'S TITLE		APPROVER'S TITLE
DESIGNED BY R. GARCIA	ISSUED BY ENGINEERING SERVICES NAVAIDS	DATE 07-16-25	JCN: 22001835
DRAWN BY R. GARCIA		DRAWING NO. HUM-D-MALSR-ES506	REV.
CHECKED BY J. MCDONALD			

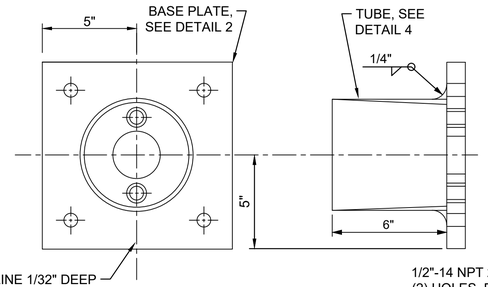

1 ES507 LIR STAND ASSEMBLY
SCALE: NTS

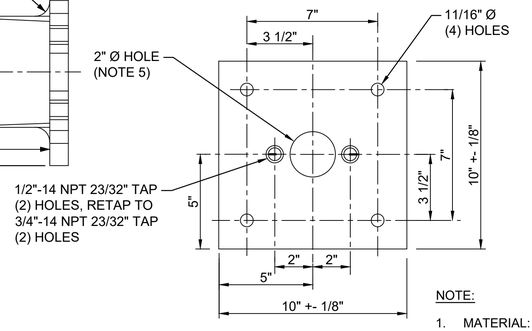

NOTE:

1. MATERIAL: 1" THICK 6061-70 ALUMINUM.

2 ES507 BASE PLATE
SCALE: NTS

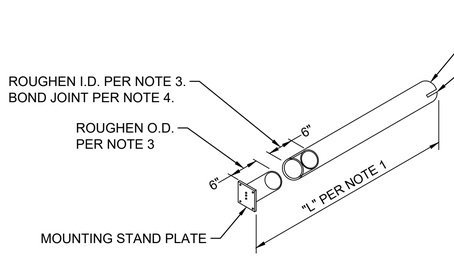

MAST BONDING DETAIL

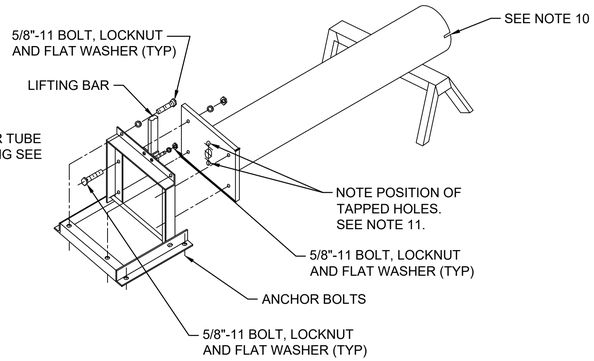

MAST BONDING DETAIL - TILTED CONDITION

3 ES507 MG-20 MAST BONDING DETAILS
SCALE: NTS

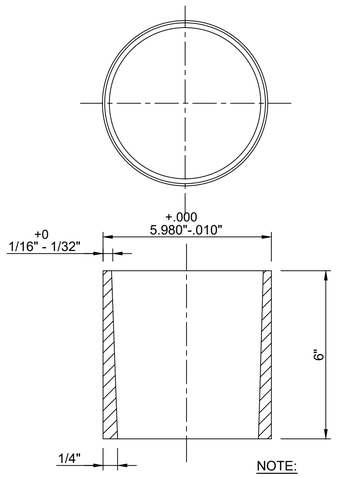

NOTE:

1. MATERIAL: 6061-70 ALUMINUM.TUBING.

4 ES507 TUBE DETAIL
SCALE: NTS

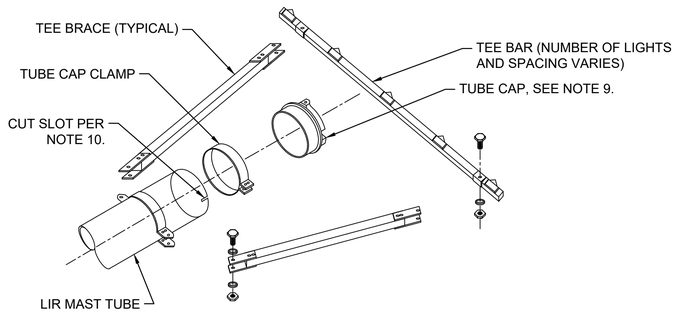

5 ES507 MG-20 MAST TEE BRACE ASSEMBLY DETAIL
SCALE: NTS

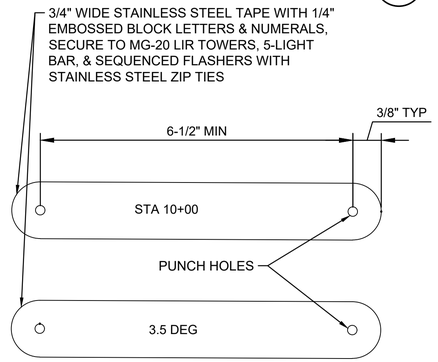

6 ES507 STATION & VERTICAL ANGLE IDENTIFICATION DETAIL
SCALE: NTS

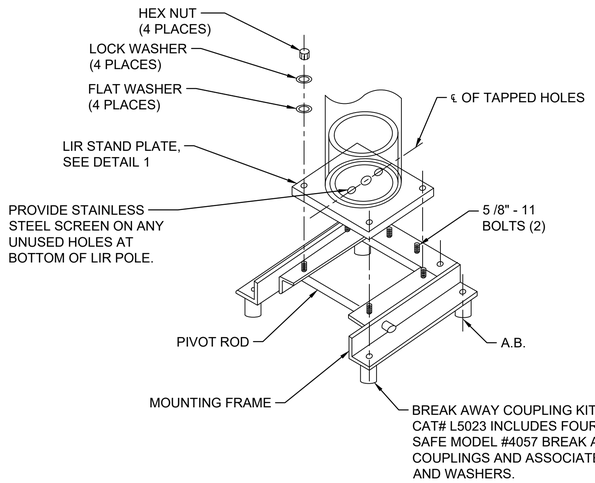

7 ES507 TILTING MG-20 MOUNTING STAND DETAIL
SCALE: NTS

NOTES:

1. THE CONTRACTOR SHALL ESTABLISH TOP OF FOUNDATION ELEVATION PER LIGHT BAR AND LAMP SCHEDULE. FOR EACH LIR TOWER AT A LIGHT STATION. THE CONTRACTOR SHALL FIELD VERIFY THE ACTUAL FOUNDATION TOP ELEVATION PRIOR TO CUTTING LIR TUBE. THE CONTRACTOR SHALL DETERMINE THE REQUIRED TUBE LENGTH 'L' AS FOLLOWS:

   L = LAMP C ELEVATION - FOUNDATION TOP ELEVATION - (V + 6 3/4")

   THE FOUNDATION TOP OF ELEVATION MUST BE FIELD VERIFIED. THE DIMENSION 'V' MAY NOT BE 10 3/4" AND IS DEPENDANT ON THE HARDWARE AND THEREFORE MUST BE FIELD VERIFIED. THE TOTAL VALUE OF THE COMPUTATION IN THE BRACKETS MUST BE INCREASED BY 6 3/8" FOR MG-20 STRUCTURES THAT REQUIRE THE BREAK-AWAY COUPLING KIT. BREAK-AWAY KIT ONLY REQUIRED AT MALS STATIONS 6 & 8 ONLY.
2. CUT TUBE LENGTH FROM THE 20 FOOT TUBE 'A' STOCK AS REQUIRED. USING A TABLE SAW WITH A DIAMOND OR CARBIDE ABRASIVE BLADE. ALL SAW CUTS SHALL BE PERPENDICULAR TO THE TUBE'S LONGITUDINAL AXIS. DEBURR CUT EDGES.
3. USE SAND PAPER TO ROUGHEN THE SURFACES TO BE BONDED TO THE STAND PLATE PER DETAIL '3'. CLEAN THE ROUGHENED SURFACES WITH A SOLVENT (TRICHLOROETHYLENE, ACETONE, OR METHYL ETHYL KEYTONE).
4. CONTRACTOR SHALL BOND EACH JOINT BY SPREADING A LIGHT COAT OF MIXED ADHESIVE ON BOTH SURFACES TO BE BONDED. SLOWLY SLIDE THE TUBE ONTO THE STAND PLATE. WHILE ROTATING IT TO EXCLUDE AIR. THE BONDING ADHESIVE MATERIALS, 2-PART EPOXY, FUSOR 304-1 RESIN AND 304-2 HARDENER, FUSOR 304-1 AND 304-2 ARE AVAILABLE FROM LORD CORP. CHEMICAL PRODUCTS GROUP, ERIE PA. THE ADHESIVE MUST BE MIXED AND CURED IN AIR TEMPERATURES WHICH DO NOT DROP BELOW 67°F. CURING IS COMPLETE AFTER 48 HOURS. FOLLOW MANUFACTURER'S INSTRUCTIONS.
5. ASSEMBLE LIR STRUCTURES IN HORIZONTAL POSITION PER DETAIL '2'.TO TILT TOWER, SECURE MOUNTING STAND ON ANCHOR BOLTS, REMOVE TWO 5/8" BOLTS AT REAR OF MOUNTING STAND ASSEMBLY, AND PIVOT INNER SECTION UP TO VERTICAL POSITION. PLACE STAND PLATE (BOTTOM OF MAST) OVER FOUR 5/8" STUDS IN MOUNTING STAND, AND FASTEN WITH HEX NUTS. NOTE POSITION OF TAPPED HOLES IN STAND PLATE. HOLES MUST BE POSITIONED TO ACCOMMODATE INSTALLATION OF TUBE CAP AND TEE BAR ASSEMBLY PER DETAIL '5' THIS SHEET.
6. SEE INSTRUCTION BOOK TI 6850.77 FOR ADDITIONAL ASSEMBLY INSTRUCTIONS.
7. TWO SPARE 'A' TUBES SHALL REMAIN IN STORAGE. RETURN TO STORAGE ANY TUBE REMNANT GREATER THAN 10' LONG.
8. TEE BAR SHALL BE ALIGNED PERPENDICULAR TO RUNWAY CENTERLINE +/- 1".
9. A SMALL HOLE MUST BE CUT IN THE RUBBER LINER OF TUBE CAP TO ALLOW ACCESS FOR TEE BAR WIRING INSTALLATION. DO NOT REMOVE RUBBER LINER.
10. SAWCUT FOUR 2" LONG SLOTS, EQUALLY SPACED AROUND PERIMETER, IN TOP OF LIR TUBE TO ALLOW EASY INSERTION OF TUBE CAP.
11. THE CONTRACTOR SHALL COVER THE 2" CENTER HOLE OF THE MG-20 STAND PLATE ASSEMBLY WITH A 2" DIA. PLASTIC OR ALUMINUM MINI-LOUVER. MCMASTER-CARR CAT. NO. 2016K23, AND 2016K13, AND 2016K3 MINI-LOUVERS MEET THIS REQUIREMENT. SEAL UNUSED HOLE IN THE STAND PLATE WITH A STAINLESS STEEL SCREEN.
12. FOR MG-20 STRUCTURES REQUIRING THE BREAK-AWAY COUPLING KIT, AN ADDITIONAL 6-3/8" MUST BE ADDED TO THE 6-3/4" DIMENSION IN ORDER TO CORRECTLY DETERMINE THE LENGTH OF TUBE REQUIRED 'L'. SEE NOTE 1 AND DETAIL 1 OF THIS SHEET. BREAK-AWAY KIT ONLY REQUIRED AT MALS STATIONS 6 & 8 ONLY.
13. ALL THREADED BOLT AND CONDUIT CONNECTIONS TO BE COATED IN LOCTITE MARINE GRADE ANTI-SEIZE OR APPROVED EQUAL.

FOR OFFICIAL USE ONLY
PUBLIC AVAILABILITY TO BE DETERMINED UNDER 5 USC 552

JAMES A MCDONALD LICENSE No 77395 STATE OF LOUISIANA PROFESSIONAL ENGINEER 7/16/25

JACOBS
1100 N GLEBE RD.
SUITE 500
ARLINGTON, VA 22201

REV.	APPROVED DATE	DESCRIPTION	JCN	REDLINE DATE	APVD

Jacobs

DEPARTMENT OF TRANSPORTATION
FEDERAL AVIATION ADMINISTRATION
CENTRAL SERVICE AREA — FORTH WORTH, TX

MALSR
REPLACEMENT RUNWAY 18

MALSR MG-20 LIGHT STATION DETAILS 2

HOUMA — HOUMA-TERREBONNE AIRPORT — LA

HOUMA-TERRABONNE AIRPORT
HOUMA, LOUISIANA

REVIEWED BY	SUBMITTED BY	APPROVED BY
	SUBMITTER'S TITLE	APPROVER'S TITLE
DESIGNED BY R. GARCIA	ISSUED BY	DATE 07-16-25	JCN: 22001835
DRAWN BY R. GARCIA	ENGINEERING SERVICES NAVAIDS	DRAWING NO. HUM-D-MALSR-ES507	REV.
CHECKED BY J. MCDONALD			

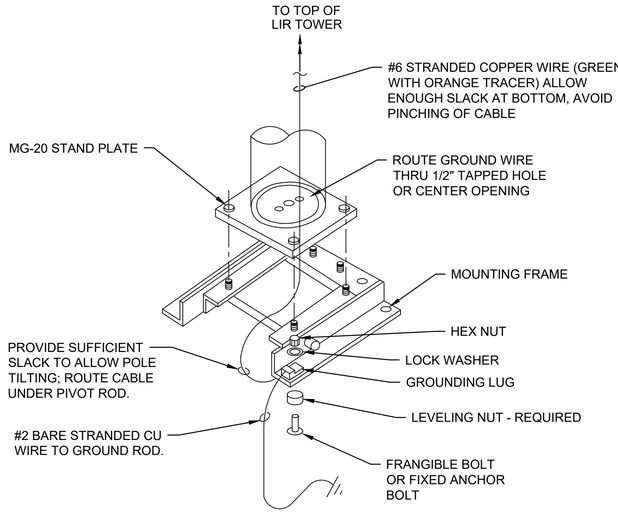

2 ES508 MG-20 LIR MOUNTING STAND GROUNDING DETAIL
SCALE: NTS

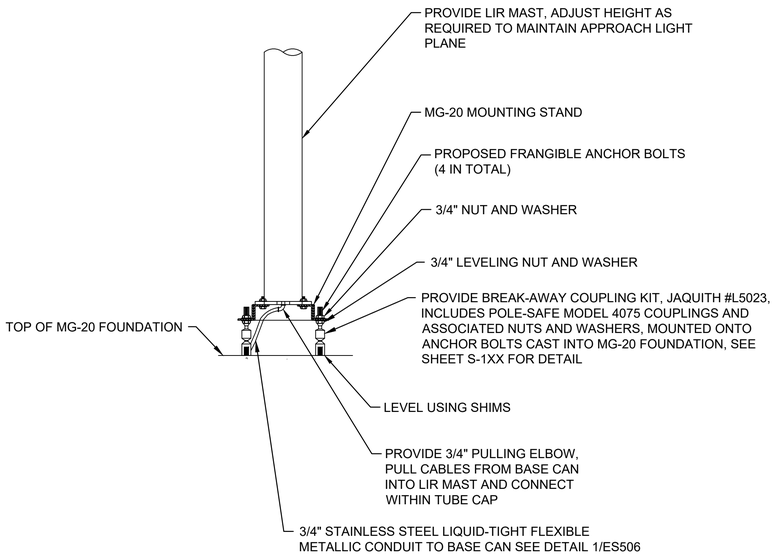

3 ES508 MG-20 LIR MOUNTING STAND INSTALLATION WITHIN RSA DETAIL
SCALE: NTS

APPLICABLE TO MALSR STATIONS:

MALS LIGHT STATIONS 6 & 8

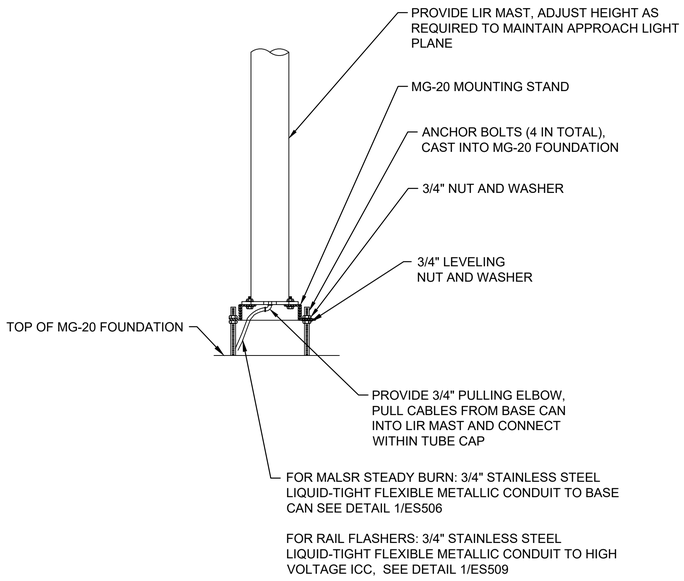

4 ES508 MG-20 LIR MOUNTING STAND INSTALLATION OUTSIDE OF RSA DETAIL
SCALE: NTS

APPLICABLE TO MALSR STATIONS:

MALS LIGHT STATIONS 10, 12, & 14
RAIL STATIONS 16, 18, 20, 22, & 24

FOR OFFICIAL USE ONLY
PUBLIC AVAILABILITY TO BE DETERMINED UNDER 5 USC 552

JAMES A MCDONALD LICENSE No 77395 7.16.25 STATE OF FLORIDA PROFESSIONAL ENGINEER

JACOBS
1100 N GLEBE RD.
SUITE 500
ARLINGTON, VA 22201

REV.	APPROVED DATE	DESCRIPTION	JCN	REDLINE DATE	APVD

Jacobs

DEPARTMENT OF TRANSPORTATION
FEDERAL AVIATION ADMINISTRATION
CENTRAL SERVICE AREA FORTH WORTH, TX

MALSR
REPLACEMENT RUNWAY 18

MALSR MG-20 LIGHT STATION DETAILS 3

HOUMA HOUMA-TERREBONNE AIRPORT LA

REVIEWED BY	SUBMITTED BY	APPROVED BY
	SUBMITTER'S TITLE	APPROVER'S TITLE
	DESIGNED BY R. GARCIA	ISSUED BY ENGINEERING SERVICES NAVAIDS; DATE 07-16-25; JCN: 22001835
	DRAWN BY R. GARCIA	DRAWING NO. HUM-D-MALSR-ES508; REV.
	CHECKED BY J. MCDONALD	

HOUMA-TERRABONNE AIRPORT
HOUMA, LOUISIANA

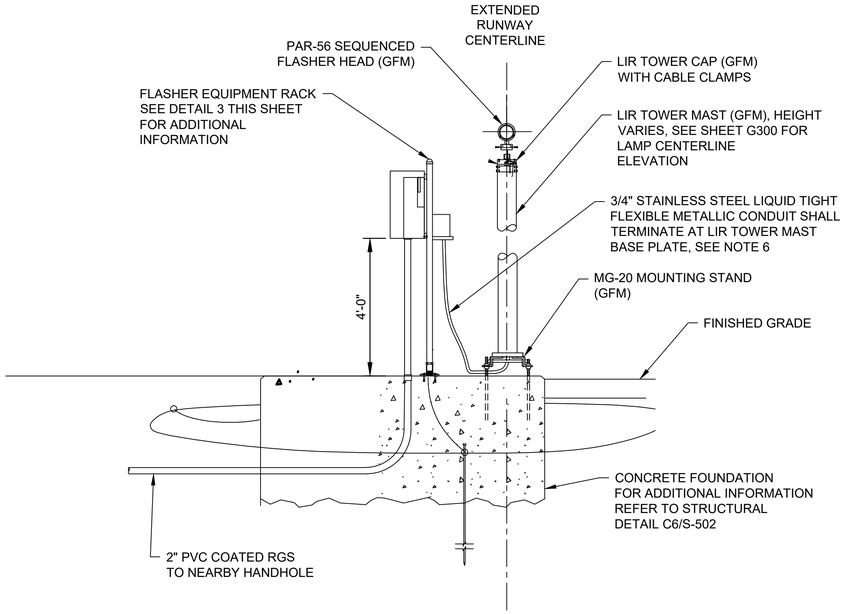

1 ES509 HIGH VOLTAGE RAIL - ELEVATION VIEW
SCALE: NTS

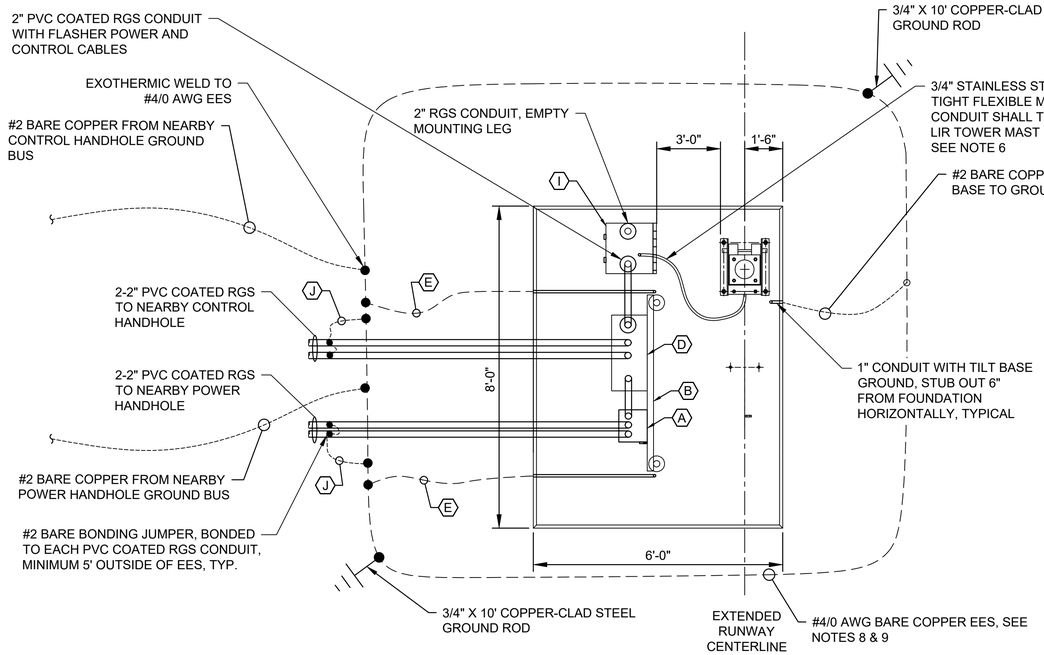

2 ES509 HIGH VOLTAGE RAIL - PLAN VIEW
SCALE: NTS

NOTES:

1. CONCRETE FOUNDATIONS ARE A MINIMUM DEPTH OF 3'-0" FOR THE ENTIRE LENGTH OF THE LIGHT BAR AND INSTALLED PERPENDICULAR TO RUNWAY CENTERLINE.
2. PROVIDE AN ID TAG WITH STATION AND AIMING ANGLE AT EACH END OF MALSR EMT LIGHT BAR. ID TAG MUST BE STAINLESS STEEL ENGRAVED MOUNTED WITH STAINLESS STEEL ZIP TIE PER DETAIL 7/ES507.
3. ALL TRENCHES OR EXCAVATED SURFACES SHALL BE COMPLETELY BACKFILLED AND TAMPED LEVEL WITH THE ADJACENT SURFACE. PER FAA-C-1391 LATEST VERSION, BACKFILLING REQUIREMENT.
4. ALL CABLES INSIDE HANDHOLES SHALL HAVE CABLE TAGS LABELED TO THEIR DESIGNATED LIGHT STATION. CABLE ID TAGS SHALL BE PER DETAIL 1/ES503.
5. ALL CABLES WITHIN THE LIR MAST SHALL BE INDIVIDUAL CONDUCTORS, MULTI-CONDUCTOR CABLE IS NOT ALLOWED.
6. PROVIDE ENOUGH 3/4" STAINLESS STEEL LIQUIDTIGHT FLEXIBLE METALLIC CONDUIT TO ALLOW LOWERING OF TOWER.
7. PROVIDE WEEP HOLE WITH SCREEN COVER IN BOTTOM OF LIGHT POLE BASE.
8. EARTH ELECTRODE SYSTEM (EES) SHALL BE LOCATED BETWEEN 2' AND 6' FROM FOUNDATIONS.
9. EES SHALL BE 30" BELOW FINISHED GRADE.
10. ALL THREADED BOLT AND CONDUIT CONNECTIONS TO BE COATED IN LOCTITE MARINE GRADE ANTI-SEIZE OR APPROVED EQUAL.
11. ALL METALLIC CONDUITS ENTERING ENCLOSURES SHALL BE BONDED VIA INSULATED GROUNDING BUSHINGS INSTALLED WITHIN THE ENCLOSURE. PROVIDE MYERS HUB, OR APPROVED EQUAL, FOR ALL CONDUIT ENTRIES INTO ENCLOSURES AND EQUIPMENT. PROVIDE BONDING JUMPER TO GROUND BUS FROM GROUNDING BUSHING THE SAME SIZE AS THE EQUIPMENT GROUNDING CONDUCTOR (EGC). INSTALL IN ACCORDANCE WITH FAA-STD-19G FIGURE 7 ALONG WITH SECTION 4.5.4 "GROUNDING BUSHINGS FOR CONDUIT RACEWAYS".

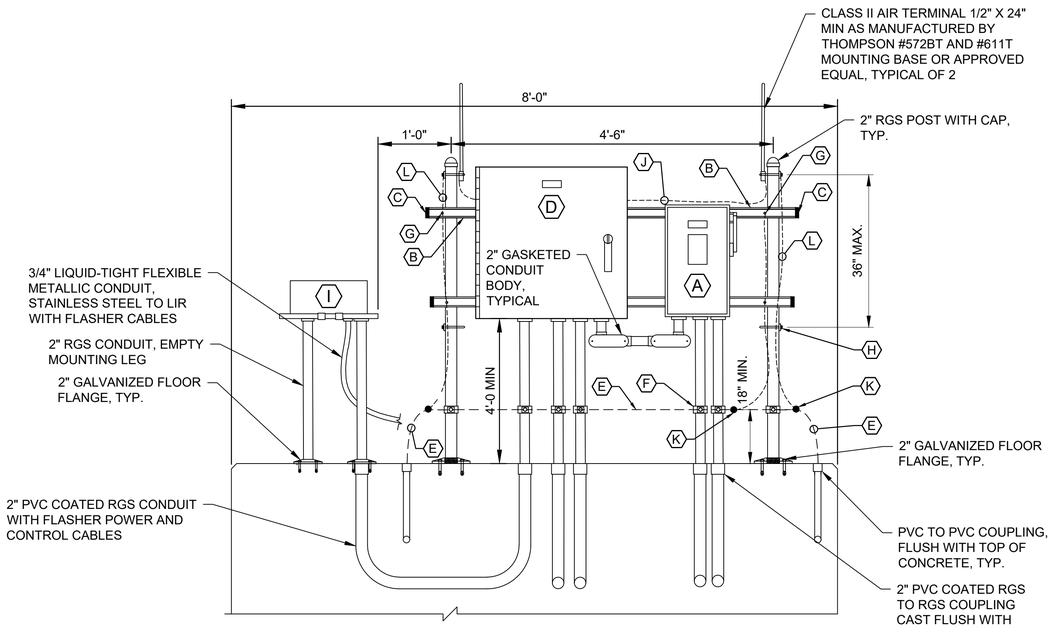

3 ES509 HIGH VOLTAGE RAIL ICC & EQUIPMENT RACK - ELEVATION VIEW
SCALE: NTS

KEYED NOTES:

A. PROVIDE HEAVY DUTY, SINGLE-THROW, DISCONNECT SWITCH 120/240V, 1ϕ, 3-WIRE 60A RATED, NONFUSIBLE IN NEMA 4X 316 STAINLESS STEEL ENCLOSURE. LABELED "STATION # RAIL DISC".

B. PROVIDE 316 STAINLESS STEEL UNISTRUT CHANNEL, TYPICAL.

C. PROVIDE UNISTRUT CHANNEL PLASTIC END CAP, TYPICAL.

D. INSTALL FLASHER JUNCTION BOX, TYPE FA-11509, LABELED "FLASHER JUNCTION BOX" (GFM).

E. #4/0 BARE STRANDED COPPER GROUND WIRE.

F. BOND #4/0 BARE STRANDED COPPER GROUND WIRE TO RGS SUPPORT POST AND RGS CONDUITS WITH MECHANICAL CONNECTION AS MANUFACTURED BY BURNDY #GAR1829W OR APPROVED EQUAL, TYPICAL.

G. BOND #2 BARE COPPER TO EACH UNISTRUT CROSSMEMBER WITH COPPER MECHANICAL LUGS, ILSCO TYPE "SLU" OR APPROVED EQUAL, UTILIZE STAINLESS STEEL BOLTS AND BELLEVILLE WASHERS.

H. U-BOLT TYPE CLAMP, SEE DETAIL 1/ES515 FOR ADDITIONAL INFORMATION, TYPICAL.

I. INSTALL RAIL HIGH VOLTAGE ICC, TYPE FA-11501 (GFM).

J. THOMPSON #28R OR APPROVED EQUAL HORIZONTAL CONDUCTOR, TYPICAL.

K. EXOTHERMIC WELD TO #4/0 BARE COPPER AT LEAST 18" ABOVE GRADE, TYPICAL.

L. THOMPSON #28R OR APPROVED EQUAL DOWN CONDUCTOR, FASTENED TO POST AT 3'-0" MAX INTERVALS, TYP.

FOR OFFICIAL USE ONLY
PUBLIC AVAILABILITY TO BE DETERMINED UNDER 5 USC 552

JACOBS
1100 N GLEBE RD.
SUITE 500
ARLINGTON, VA 22201

REV.	APPROVED DATE	DESCRIPTION	JCN	REDLINE DATE	APVD

DEPARTMENT OF TRANSPORTATION
FEDERAL AVIATION ADMINISTRATION
CENTRAL SERVICE AREA — FORTH WORTH, TX

Jacobs

MALSR
REPLACEMENT RUNWAY 18

HIGH VOLTAGE RAIL LIGHT STATION DETAILS

HOUMA — HOUMA-TERREBONNE AIRPORT — LA

HOUMA-TERRABONNE AIRPORT
HOUMA, LOUISIANA

JAMES A. MCDONALD LICENSE No 77395 STATE OF LOUISIANA PROFESSIONAL ENGINEER 7.16.25

REVIEWED BY	SUBMITTED BY	APPROVED BY
	SUBMITTER'S TITLE	APPROVER'S TITLE
	DESIGNED BY R. GARCIA	ISSUED BY: ENGINEERING SERVICES NAVAIDS
	DRAWN BY R. GARCIA	DATE 07-16-25 JCN: 22001835
	CHECKED BY J. MCDONALD	DRAWING NO. HUM-D-MALSR-ES509 REV.

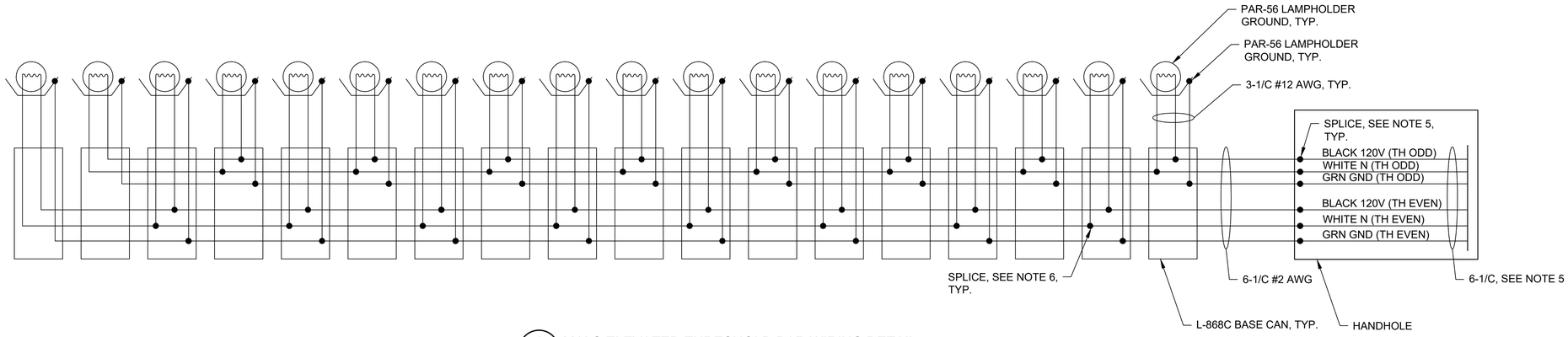

1 ES510 MALS ELEVATED THRESHOLD BAR WIRING DETAIL
SCALE: NTS

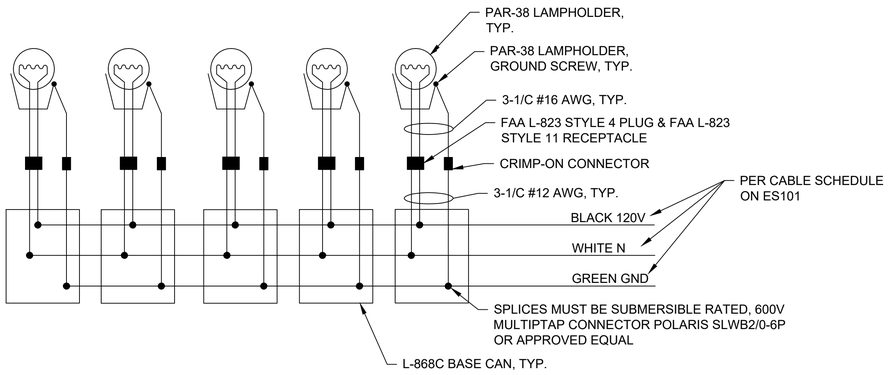

2 ES510 MALS FRANGIBLE EMT STATION WIRING DETAIL
SCALE: NTS

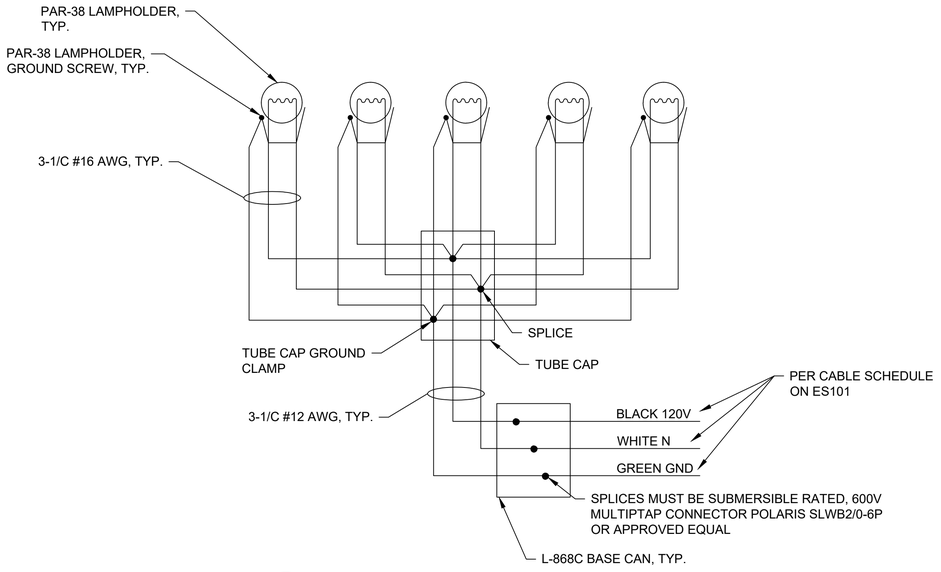

3 ES510 MALS LIR STRUCTURE WIRING DETAIL
SCALE: NTS

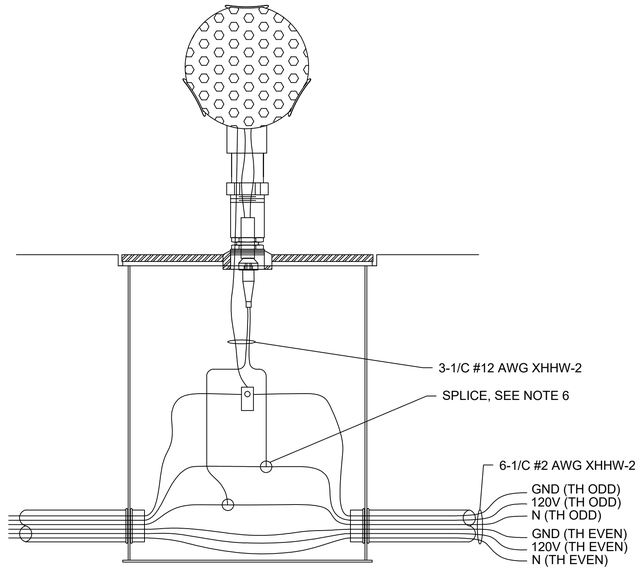

4 ES510 MALS ELEVATED THRESHOLD BAR LIGHT BASE WIRING DETAIL
SCALE: NTS

NOTES:

1. ALL WIRING SHALL MEET LATEST EDITION OF NFPA 70, THE NATIONAL ELECTRIC CODE (NEC), AND FAA STD-019 LATEST VERSION, LIGHTNING AND SURGE PROTECTION, GROUNDING, BONDING AND SHIELDING REQUIREMENTS FOR FACILITIES AND ELECTRONIC EQUIPMENT.
2. UNDERGROUND POWER CONDUCTORS SHALL BE 600V RATED XHHW-2 OR APPROVED EQUAL UNLESS OTHERWISE INDICATED. ABOVEGROUND POWER CONDUCTORS SHALL BE 600V RATED THWN-2, XHHW-2, OR APPROVED EQUAL UNLESS OTHERWISE INDICATED.
3. ALL CONDUCTORS #6 AWG AND SMALLER ARE COLORED AS INDICATED.
4. GROUND TERMINATIONS SHOWN ARE DIAGRAMMATIC ONLY; MULTIPLE GROUNDING CONDUCTORS SHALL NOT BE TERMINATED IN SINGLE CONDUCTOR GROUND LUGS.
5. INCOMING POWER CONDUCTORS TO THE THRESHOLD ARE SIZED TO PREVENT EXCESSIVE VOLTAGE DROP. THIS LARGER CONDUCTOR MUST BE SPLICED TO THE #2 AWG WITH AN INSULATED INLINE SPLICE POLARIS #PBT-250 OR APPROVED EQUAL.
6. SPLICE MUST BE COMPRESSION TYPE SUCH AS BURNDY #YPC2A8U OR APPROVED EQUAL. INSULATE AND SEAL SPLICE WITH 3M SCOTCHCAST WYE RESIN SPLICE #90-B1 OR APPROVED EQUAL.

FOR OFFICIAL USE ONLY
PUBLIC AVAILABILITY TO BE DETERMINED UNDER 5 USC 552

JAMES A MCDONALD LICENSE No 77395 7.16.25 STATE OF FLORIDA PROFESSIONAL ENGINEER

JACOBS
1100 N GLEBE RD.
SUITE 500
ARLINGTON, VA 22201

REV.	APPROVED DATE	DESCRIPTION	JCN	REDLINE DATE	APVD

DEPARTMENT OF TRANSPORTATION
FEDERAL AVIATION ADMINISTRATION
CENTRAL SERVICE AREA — FORTH WORTH, TX

Jacobs

MALSR
REPLACEMENT RUNWAY 18

MALS STEADY-BURN WIRING DETAILS

HOUMA — HOUMA-TERREBONNE AIRPORT — LA

HOUMA-TERRABONNE AIRPORT
HOUMA, LOUISIANA

REVIEWED BY	SUBMITTED BY	APPROVED BY
	SUBMITTER'S TITLE	APPROVER'S TITLE
	DESIGNED BY R. GARCIA	ISSUED BY ENGINEERING SERVICES NAVAIDS — DATE 07-16-25 — JCN: 22001835
	DRAWN BY R. GARCIA	DRAWING NO. HUM-D-MALSR-ES510 — REV.
	CHECKED BY J. MCDONALD	

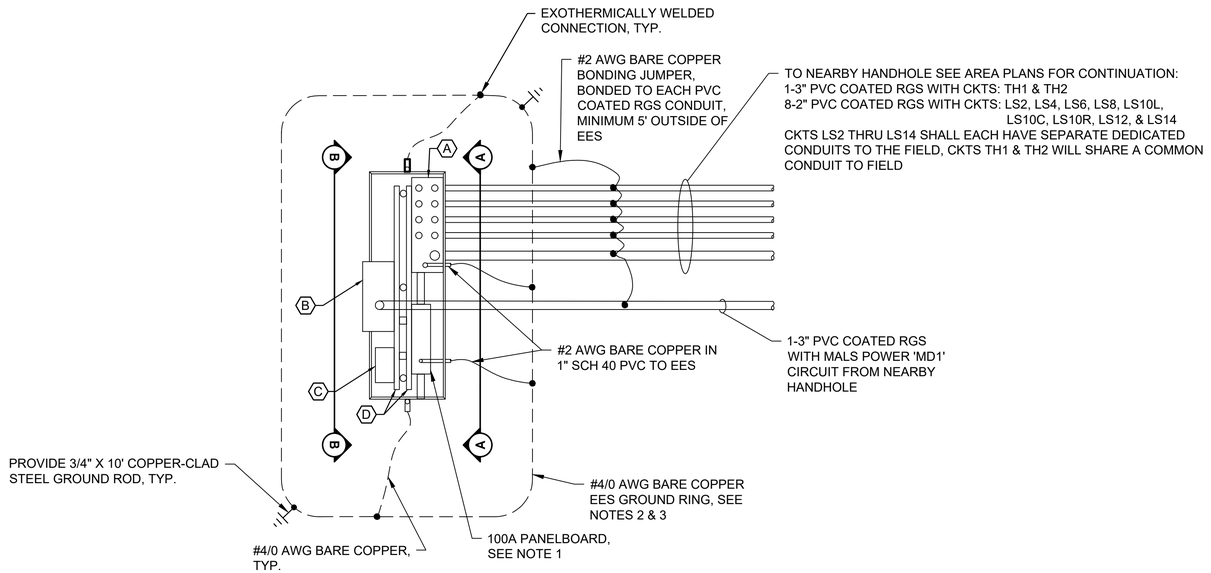

1 ES511 MALSR DISTRIBUTION PANEL - PLAN VIEW
SCALE: NTS

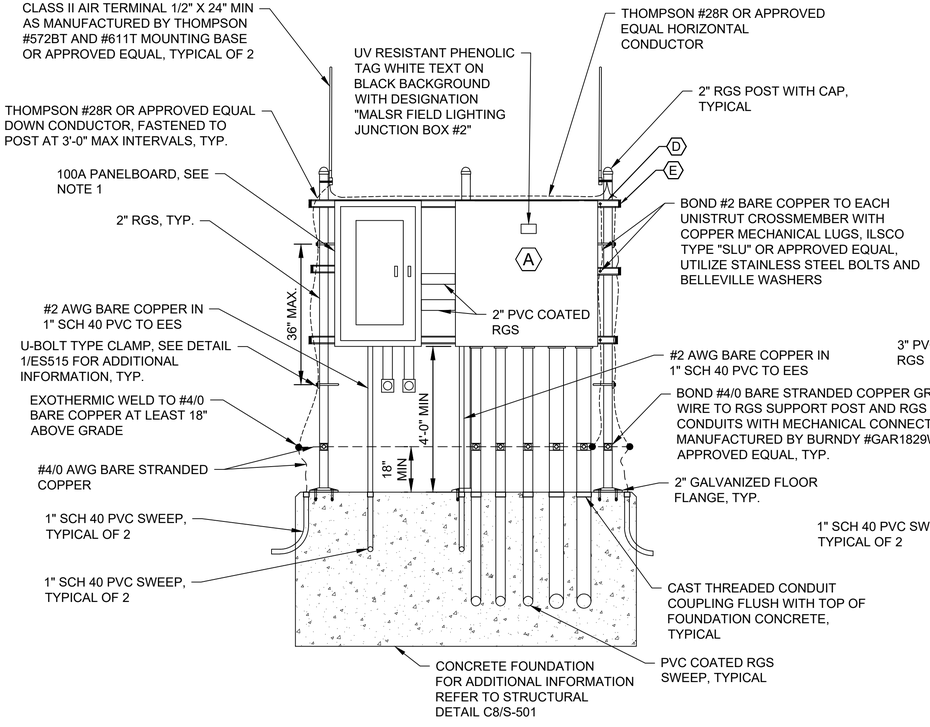

2 ES511 MALSR DISTRIBUTION PANEL - SECTION A-A
SCALE: NTS

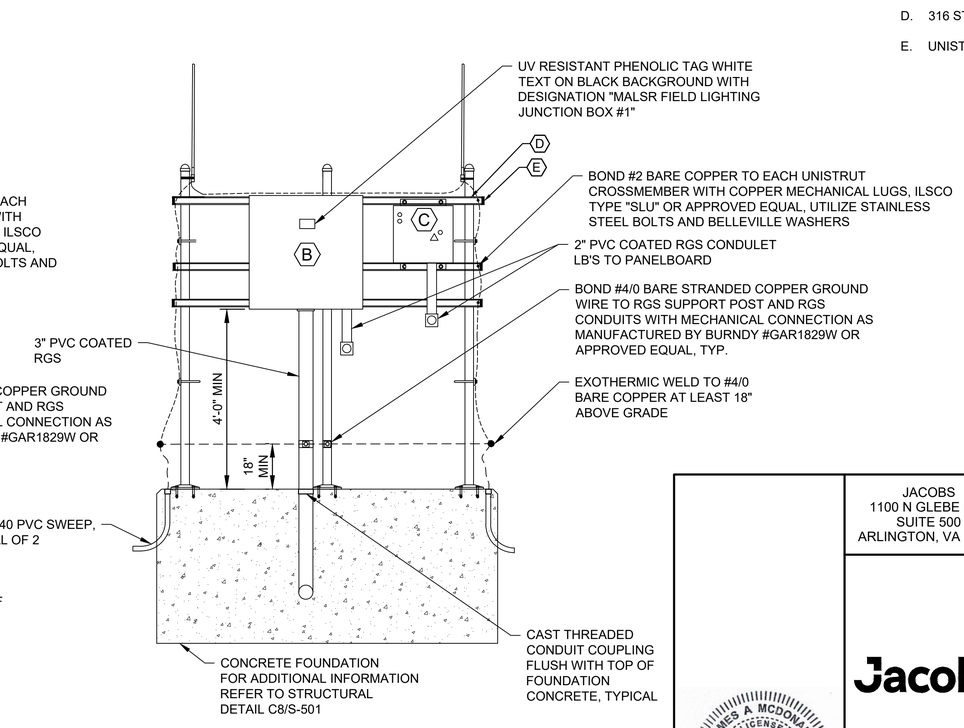

3 ES511 MALSR DISTRIBUTION PANEL - SECTION B-B
SCALE: NTS

NOTES:

1. PANELBOARD SHALL BE DOOR IN DOOR CONSTRUCTION, PANELBOARD COVER SHALL BE FULL PIANO HINGED TYPE, 120/240V, 1ϕ, 3 WIRE, INSULATED NEUTRAL BUS AND COPPER GROUND BUS WITH 100A MAIN BREAKER, IN NEMA 4X 316 STAINLESS STEEL ENCLOSURE. CIRCUIT BREAKERS SHALL BE BOLT-ON TYPE.
2. EARTH ELECTRODE SYSTEM (EES) SHALL BE LOCATED BETWEEN 2' AND 6' FROM EQUIPMENT FOUNDATION.
3. EES SHALL BE 30" BELOW FINISHED GRADE.
4. TOP OF GROUND ROD SHALL BE 18" BELOW FINISHED GRADE.
5. GROUND RODS SHALL BE COPPER-CLAD STEEL, 10' IN LENGTH AND 3/4" DIAMETER. ROD CLADDING SHALL NOT BE LESS THAN 1/100" THICK. GROUND ROD SPACING SHALL NOT BE LESS THAN 2 TIMES GROUND ROD LENGTH.
6. ALL CONNECTIONS BELOW GRADE SHALL BE EXOTHERMICALLY WELDED.
7. ALL METALLIC CONDUIT SHALL BE PVC COATED RGS UNLESS OTHERWISE NOTED. ALL METALLIC CONDUITS ENTERING ENCLOSURES SHALL BE BONDED VIA INSULATED GROUNDING BUSHINGS INSTALLED WITHIN THE ENCLOSURE. PROVIDE MYERS HUB, OR APPROVED EQUAL, FOR ALL CONDUIT ENTRIES INTO ENCLOSURES AND EQUIPMENT. PROVIDE BONDING JUMPER TO GROUND BUS FROM GROUNDING BUSHING THE SAME SIZE AS THE EQUIPMENT GROUNDING CONDUCTOR (EGC). INSTALL IN ACCORDANCE WITH FAA-STD-19G FIGURE 7 ALONG WITH SECTION 4.5.4 "GROUNDING BUSHINGS FOR CONDUIT RACEWAYS".
8. CONTRACTOR SHALL LOCATE AND PROTECT ALL UNDERGROUND UTILITIES STORM DRAINS, AIRPORT, AND FAA CABLES PRIOR TO START OF ANY EXCAVATION.
9. ALL THREADED BOLT AND CONDUIT CONNECTIONS TO BE COATED IN LOCTITE MARINE GRADE ANTI-SEIZE OR APPROVED EQUAL.

(#) KEYED NOTES:

A. 30" X 30" X 10" NEMA 4X 316 STAINLESS STEEL HINGED JUNCTION BOX W/BACKPLATE AND GROUND BUS BAR.

B. 24" X 24" X 10" NEMA 4X 316 STAINLESS STEEL HINGED JUNCTION BOX.

C. RAYVOSS 100A SPD IN NEMA 4X 316 STAINLESS STEEL ENCLOSURE OR APPROVED EQUAL.

D. 316 STAINLESS STEEL UNISTRUT CHANNEL, TYPICAL.

E. UNISTRUT CHANNEL PLASTIC END CAP, TYPICAL.

FOR OFFICIAL USE ONLY
PUBLIC AVAILABILITY TO BE DETERMINED UNDER 5 USC 552

JAMES A MCDONALD LICENSE No 77395 STATE OF FLORIDA PROFESSIONAL ENGINEER 7/16/25

JACOBS
1100 N GLEBE RD.
SUITE 500
ARLINGTON, VA 22201

REV.	APPROVED DATE	DESCRIPTION	JCN	REDLINE DATE	APVD

DEPARTMENT OF TRANSPORTATION
FEDERAL AVIATION ADMINISTRATION
CENTRAL SERVICE AREA — FORTH WORTH, TX

Jacobs

MALSR
REPLACEMENT RUNWAY 18
MALSR DISTRIBUTION PANEL DETAILS

HOUMA — HOUMA-TERREBONNE AIRPORT — LA

REVIEWED BY	SUBMITTED BY	APPROVED BY
	SUBMITTER'S TITLE	APPROVER'S TITLE
DESIGNED BY R. GARCIA	ISSUED BY ENGINEERING SERVICES NAVAIDS	DATE 07-16-25 — JCN: 22001835
DRAWN BY R. GARCIA		DRAWING NO. HUM-D-MALSR-ES511 — REV.
CHECKED BY J. MCDONALD		

HOUMA-TERRABONNE AIRPORT
HOUMA, LOUISIANA

METHOD B - (TO BE USED WHERE RELATIVELY LARGE GROUNDING SYSTEMS ARE INSTALLED):

1. NEW FACILITIES - A QUALIFIED ELECTRICIAN, FURNISHED BY THE CONTRACTOR, SHALL PREPARE A NEAT SKETCH OF THE FACILITY GROUND SYSTEM OF THE NEW FACILITY. SIMILAR TO THAT SHOWN IN FIGURE 1.
2. AN FAA RESIDENT ENGINEER SHALL BE PRESENT TO MONITOR AND/OR VERIFY THE EARTH ELECTRODE RESISTANCE TEST. THIS SKETCH TOGETHER WITH THE RESISTANCE MEASUREMENT WORKSHEET (FIGURE 2) WILL BECOME PART OF THE PERMANENT FACILITIES FILES. THREE COPIES WILL BE PROVIDED TO THE RESIDENT ENGINEER.
3. NEW AND EXISTING FACILITIES - MEASURE THE RESISTANCE OF THE ELECTRODE SYSTEM WITH AN INSTRUMENT DESIGNED FOR THE PURPOSE USING THE FALL POTENTIAL METHOD (SUCH AS THE BIDDLE NULL BALANCE EARTH TESTER). PROCEED AS FOLLOWS:
   - A. CONNECT THE TERMINALS MARKED C1 AND P1 TOGETHER AND CONNECT THEM TO THE ELECTRODE UNDER TEST.
   - B. POSITION THE C2 PROBE ALONG A LINE WHICH MAXIMIZES THE DISTANCE FROM THE ELECTRODE UNDER THE TEST AND FROM THE OTHER BURIED METALS SUCH AS UTILITY PIPES, POWER AND SIGNAL CABLES, FUEL TANKS, ETC. IN CHOOSING THE DIRECTION FOR PLACEMENT OF THE C2 PROBE, EXAMINE THE CONFIGURATION OF THE ELECTRODE SYSTEM FOR THE FACILITY AND DETERMINE THE LOCATION OF ALL SUCH BURIED METALS. THEN LOCATE THE PROBE AS FAR AS POSSIBLE FROM THESE MATERIALS AS ILLUSTRATED IN FIGURE 1 (FOR LONG SYSTEMS SUCH AS ALS. THE C2 PROBE LINE SHOULD BE RUN 90 DEGREES TO ALS) KEEP C2 & P2 LEADS SEPARATED AS FAR AS POSSIBLE.
   - C. POSITION THE C2 PROBE AT DISTANCES AS SHOWN IN FIGURE E. RECORD THE METER READINGS FOR EACH C2 & P2 PROBE POSITION (NOTE THAT THE P2 POSITIONS ARE 62% OF THE C2 POSITIONS). IT MAY NOT BE NECESSARY TO PLOT THE FULL 500'. PLOT ENOUGH POINTS TO ACCURATELY DETERMINE WHERE CURVE LEVELS OFF
   - D. NEXT, PLOT ON A GRAPH AS MANY RECORDED RESISTANCE READINGS VERSUS THE CORRESPONDING C2 PROBE POSITIONS AS NECESSARY TO DETERMINE WHERE CURVE LEVELS OFF (SEE FIGURE 3).
   - E. THE TRUE VALUE OF RESISTANCE CAN BE ESTIMATED BY EXTRAPOLATING THE CURVE TO ITS ASYMPTOTIC VALUE.
4. THIS SHEET SHALL BE FILLED OUT DURING CONSTRUCTION AND TURNED OVER TO FAA AT B.O.D.

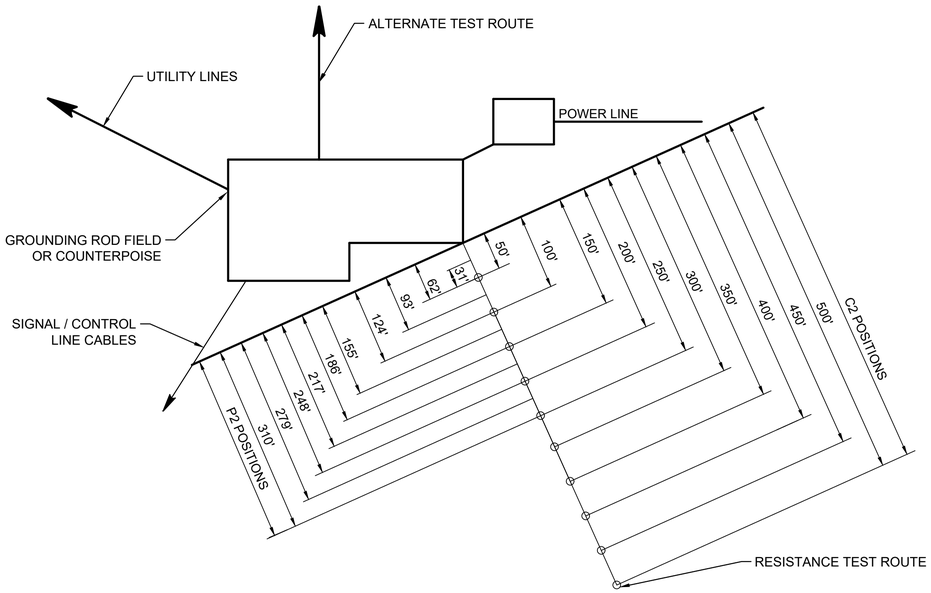

1 ES512 FIGURE 1 - EARTH RESISTANCE MEASUREMENT AT A TYPICAL FACILITY
SCALE: NTS

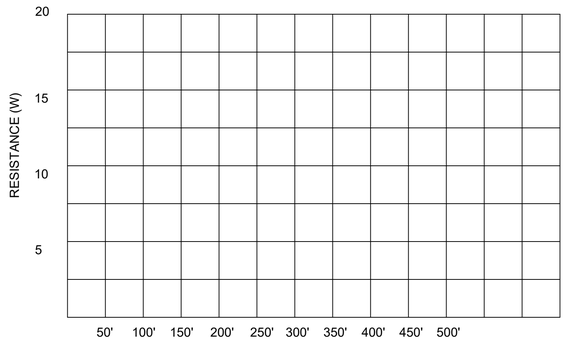

PROBE C2 LOCATION

C2 PROBE DISTANCE	P2 PROBE DISTANCE (.62xC2)	RESISTANCE METER READING W
50'	31'	
100'	62'	
150'	93'	
200'	124'	
250'	154'	
300'	185'	
350'	217'	
400'	248'	
450'	279'	
500'	318'	

DEPTH OF REFERENCE RODS
RESISTANCE =

2 ES512 FIGURE 2 - RESISTANCE MEASUREMENT WORKSHEETS
SCALE: NTS

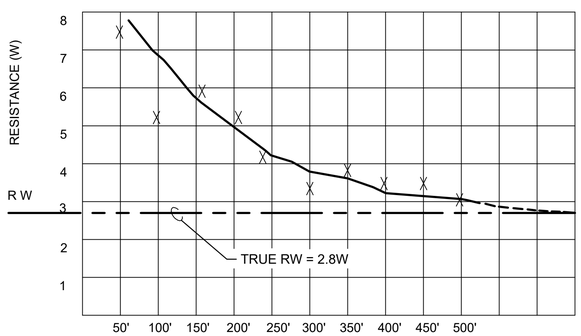

PROBE 2 LOCATION

C2 PROBE DISTANCE	P2 PROBE DISTANCE (.62xC2)	RESISTANCE METER READING W
50'	31'	7.5
100'	62'	5.2
150'	93'	5.9
200'	124'	5.2
250'	154'	4.2'
300'	185'	3.4
350'	217'	3.8
400'	248'	3.4
450'	279'	3.4
500'	318'	3.1

DEPTH OF REFERENCE RODS
RESISTANCE = 2.8 W

NOTE:

1. IT MAY NOT BE NECESSARY TO PLOT THE FULL 500 FT. PLOT ENOUGH POINTS TO ACCURATELY DETERMINE WHERE CURVE LEVELS OFF.

3 ES512 FIGURE 3 - SAMPLE OF A COMPLETED RESISTANCE MEASUREMENT WORKSHEETS
SCALE: NTS

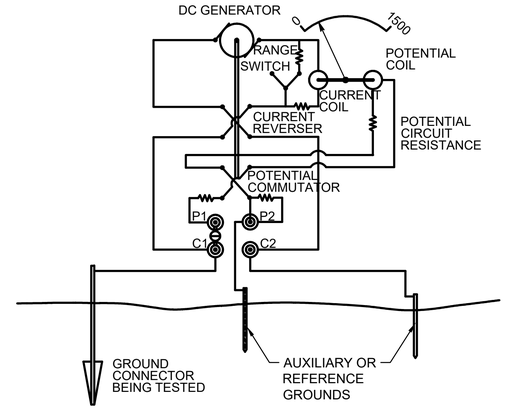

4 ES512 SCHEMATIC OF CONNECTORS OF GROUND TESTERS
SCALE: NTS

FOR OFFICIAL USE ONLY
PUBLIC AVAILABILITY TO BE DETERMINED UNDER 5 USC 552

JAMES A MCDONALD LICENSE No 77395 STATE OF FLORIDA PROFESSIONAL ENGINEER 7.16.25

JACOBS
1100 N GLEBE RD.
SUITE 500
ARLINGTON, VA 22201

REV.	APPROVED DATE	DESCRIPTION	JCN	REDLINE DATE	APVD

Jacobs

DEPARTMENT OF TRANSPORTATION
FEDERAL AVIATION ADMINISTRATION
CENTRAL SERVICE AREA — FORTH WORTH, TX

MALSR
REPLACEMENT RUNWAY 18

MALSR FACILITY GROUND RESISTANCE TESTING
REQUIREMENT DETAILS

HOUMA — HOUMA-TERREBONNE AIRPORT — LA

HOUMA-TERRABONNE AIRPORT
HOUMA, LOUISIANA

REVIEWED BY	SUBMITTED BY	APPROVED BY
	SUBMITTER'S TITLE	APPROVER'S TITLE
DESIGNED BY R. GARCIA	ISSUED BY: ENGINEERING SERVICES NAVAIDS	DATE 07-16-25 JCN: 22001835
DRAWN BY R. GARCIA		DRAWING NO. HUM-D-MALSR-ES512 REV.
CHECKED BY J. MCDONALD		

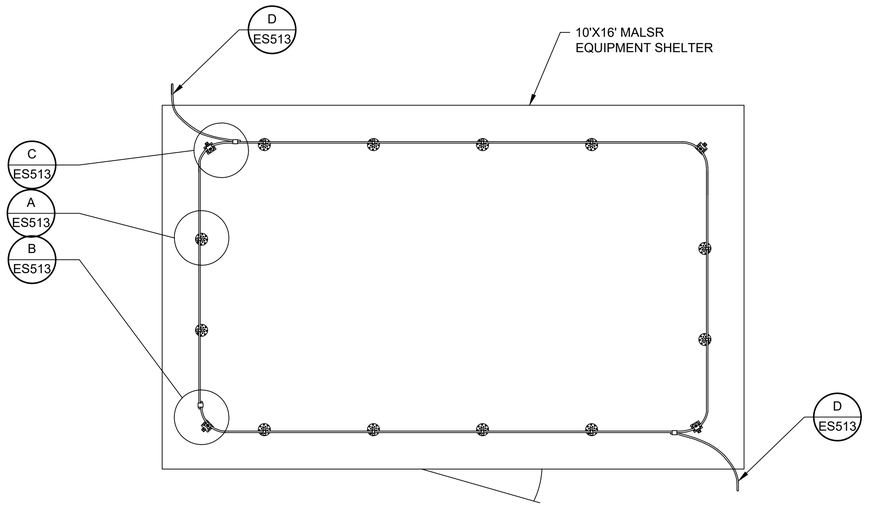

1 ES513 MALSR SHELTER ROOF LIGHTNING PROTECTION PLAN DETAIL
SCALE: NTS

NOTES:

1. EARTH ELECTRODE SYSTEM (EES) SHALL BE LOCATED BETWEEN 2' AND 6' FROM FOUNDATIONS.
2. EES SHALL BE 30" BELOW FINISHED GRADE.
3. TOP OF GROUND ROD SHALL BE 18" BELOW FINISHED GRADE.
4. ALL CONNECTIONS BELOW GRADE SHALL BE EXOTHERMICALLY WELDED.
5. ALL METALLIC CONDUITS ENTERING ENCLOSURES SHALL BE BONDED VIA INSULATED GROUNDING BUSHINGS INSTALLED WITHIN THE ENCLOSURE. PROVIDE MYERS HUB, OR APPROVED EQUAL, FOR ALL CONDUIT ENTRIES INTO ENCLOSURES AND EQUIPMENT.
6. PROVIDE GROUNDING BRAID ON ALL CONTRACTOR PROVIDED JUNCTION BOXES BETWEEN THE BODY AND HINGED COVERS. USE GROUNDING LUG TO SECURE THE THE BRAID. ANY PAINT REMOVED TO SECURE THE ATTACHMENT OF THE GROUND LUG SHALL BE REPAIRED TO PREVENT RUSTING.
7. PROVIDE #6 AWG GROUND WIRE BETWEEN ALL CONTRACTOR PROVIDED WIREWAYS AND COVERS. USE GROUNDING LUG TO SECURE THE BRAID. ANY PAINT REMOVED TO SECURE THE ATTACHMENT OF THE GROUND LUG SHALL BE REPAIRED TO PREVENT RUSTING.
8. ALL THREADED BOLT AND CONDUIT CONNECTIONS TO BE COATED IN LOCTITE MARINE GRADE ANTI-SEIZE OR APPROVED EQUAL.

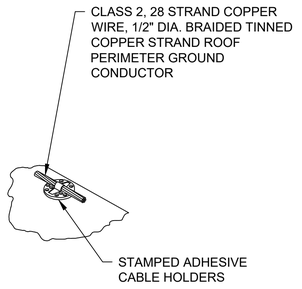

A ES513 ROOF CONDUCTOR CONNECTION DETAIL
SCALE: NTS

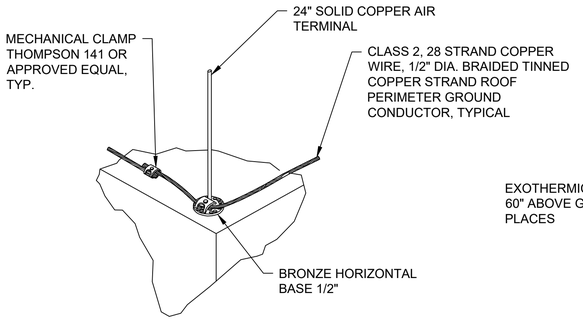

B ES513 AIR TERMINAL CONNECTION DETAIL
SCALE: NTS

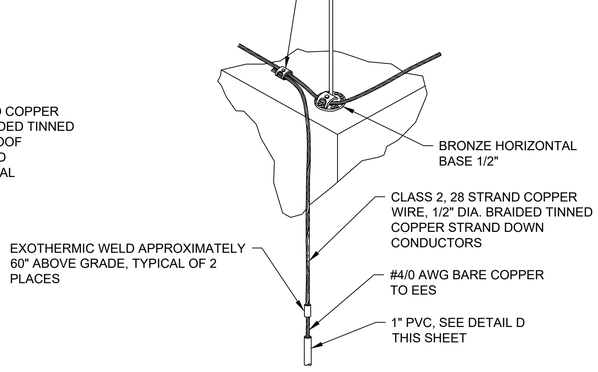

C ES513 AIR TERMINAL/DOWN CONDUCTOR CONNECTION DETAIL
SCALE: NTS

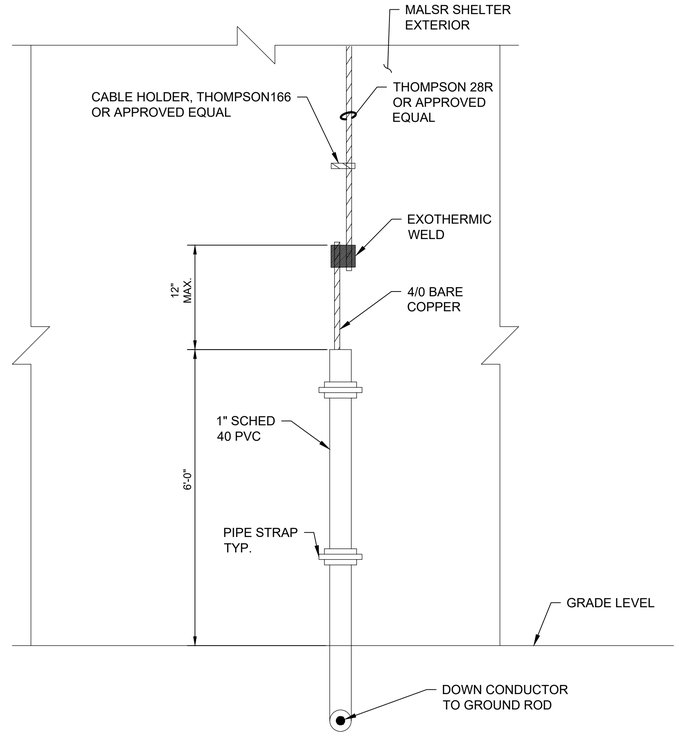

D ES513 DOWN CONDUCTOR SHELTER EXTERIOR MOUNTING DETAIL
SCALE: NTS

FOR OFFICIAL USE ONLY
PUBLIC AVAILABILITY TO BE DETERMINED UNDER 5 USC 552

JACOBS
1100 N GLEBE RD.
SUITE 500
ARLINGTON, VA 22201

REV.	APPROVED DATE	DESCRIPTION	JCN	REDLINE DATE	APVD

DEPARTMENT OF TRANSPORTATION
FEDERAL AVIATION ADMINISTRATION
CENTRAL SERVICE AREA — FORTH WORTH, TX

Jacobs

MALSR
REPLACEMENT RUNWAY 18

MALSR SHELTER LIGHTNING PROTECTION DETAILS

HOUMA — HOUMA-TERREBONNE AIRPORT — LA

HOUMA-TERRABONNE AIRPORT
HOUMA, LOUISIANA

REVIEWED BY	SUBMITTED BY		APPROVED BY
	SUBMITTER'S TITLE		APPROVER'S TITLE
DESIGNED BY R. GARCIA	ISSUED BY	DATE 07-16-25	JCN: 22001835
DRAWN BY R. GARCIA	ENGINEERING SERVICES NAVAIDS	DRAWING NO. HUM-D-MALSR-ES513	REV.
CHECKED BY J. MCDONALD			

JAMES A MCDONALD LICENSE No 77395 STATE OF FLORIDA PROFESSIONAL ENGINEER 7.16.25

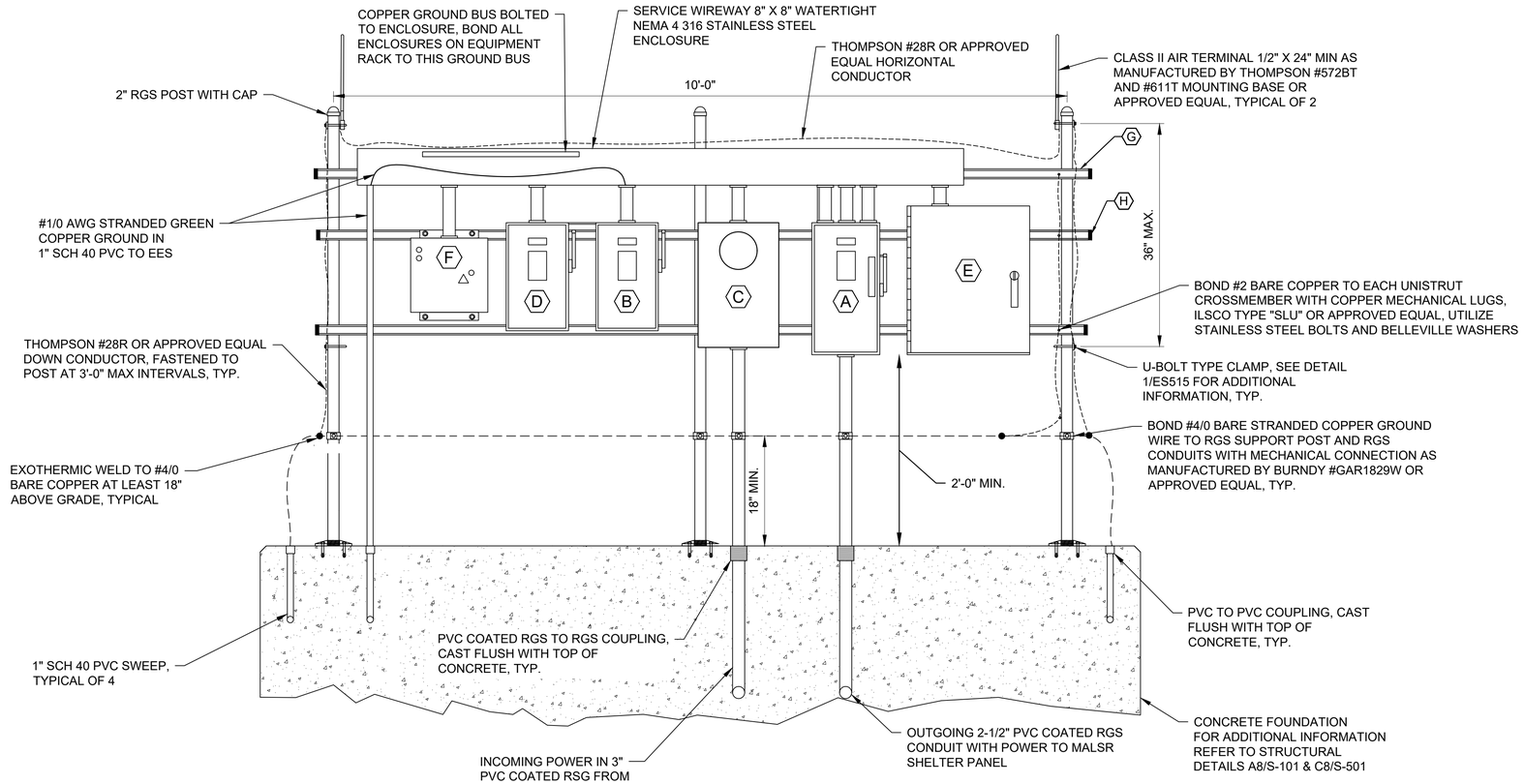

1 ES514 SHELTER SERVICE EQUIPMENT RACK DETAIL - ELEVATION VIEW
SCALE: NTS

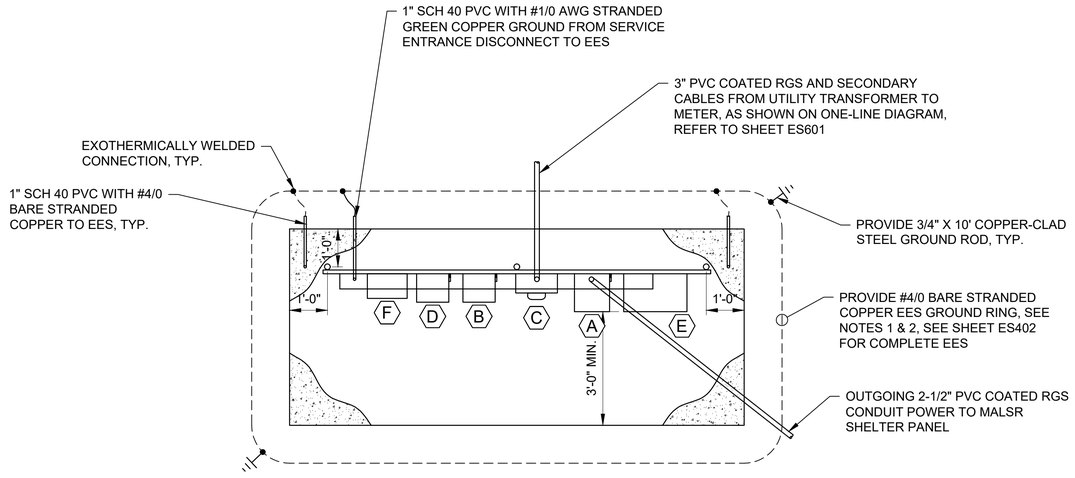

2 ES514 SHELTER SERVICE EQUIPMENT RACK DETAIL - PLAN VIEW
SCALE: NTS

NOTES:

1. EARTH ELECTRODE SYSTEM (EES) SHALL BE LOCATED BETWEEN 2' AND 6' FROM FOUNDATIONS.
2. EES SHALL BE 30" BELOW FINISHED GRADE.
3. TOP OF GROUND ROD SHALL BE 18" BELOW FINISHED GRADE.
4. ALL CONNECTIONS BELOW GRADE SHALL BE EXOTHERMICALLY WELDED.
5. ALL METALLIC CONDUITS ENTERING ENCLOSURES SHALL BE BONDED VIA INSULATED GROUNDING BUSHINGS INSTALLED WITHIN THE ENCLOSURE. PROVIDE MYERS HUB, OR APPROVED EQUAL, FOR ALL CONDUIT ENTRIES INTO ENCLOSURES AND EQUIPMENT. PROVIDE BONDING JUMPER TO GROUND BUS FROM GROUNDING BUSHING THE SAME SIZE AS THE EQUIPMENT GROUNDING CONDUCTOR (EGC). INSTALL IN ACCORDANCE WITH FAA-STD-19G FIGURE 7 ALONG WITH SECTION 4.5.4 "GROUNDING BUSHINGS FOR CONDUIT RACEWAYS".
6. PROVIDE GROUNDING BRAID ON ALL CONTRACTOR PROVIDED JUNCTION BOXES BETWEEN THE BODY AND HINGED COVERS. USE GROUNDING LUG TO SECURE THE THE BRAID. ANY PAINT REMOVED TO SECURE THE ATTACHMENT OF THE GROUND LUG SHALL BE REPAIRED TO PREVENT RUSTING.
7. PROVIDE #6 AWG GROUND WIRE BETWEEN ALL CONTRACTOR PROVIDED WIREWAYS AND COVERS. USE GROUNDING LUG TO SECURE THE BRAID. ANY PAINT REMOVED TO SECURE THE ATTACHMENT OF THE GROUND LUG SHALL BE REPAIRED TO PREVENT RUSTING.
8. ALL THREADED BOLT AND CONDUIT CONNECTIONS TO BE COATED IN LOCTITE MARINE GRADE ANTI-SEIZE OR APPROVED EQUAL.

(#) KEYED NOTES:

A. PROVIDE HEAVY DUTY, DOUBLE-THROW, 120/240V, 1ϕ, 3-WIRE 200A RATED, MANUAL TRANSFER SWITCH IN NEMA 4X 316 STAINLESS STEEL ENCLOSURE.

B. PROVIDE HEAVY DUTY, SERVICE ENTRANCE RATED, SINGLE-THROW, DISCONNECT SWITCH 120/240V, 1ϕ, 3-WIRE 200A RATED, FUSED AT 200A IN NEMA 4X 316 STAINLESS STEEL ENCLOSURE. LABELED "NORMAL POWER".

C. PROVIDE A 120/240V, 1ϕ, 3-WIRE, 200A RATED METER BASE WITH METER SOCKET LEVER BYPASS. METER BASE SHALL BE NEMA 4X 316 STAINLESS STEEL ENCLOSURE AND SHALL MEET UTILITY COMPANY REQUIREMENTS. COORDINATE INSTALLATION OF METER WITH UTILITY COMPANY, ENSURE MOUNTING HEIGHT OF METER IS WITHIN UTILITY REQUIREMENTS.

D. PROVIDE HEAVY DUTY, SINGLE-THROW, DISCONNECT SWITCH 120/240V, 1ϕ, 3-WIRE 200A RATED, FUSED AT 200A IN NEMA 4X 316 STAINLESS STEEL ENCLOSURE. LABELED "SPD DISC".

E. PROVIDE PORTABLE GENERATOR CONNECTION BOX, 120/240V, 1ϕ, 3-WIRE, 200A RATED, IN NEMA 4X 316 STAINLESS STEEL ENCLOSURE, CAM LOCK SERIES 16 CONNECTORS BOTTOM MOUNTED COLOR CODED PER PHASE/NEUTRAL/GND.

F. PROVIDE RAYVOSS SPD IN NEMA 4X 316 STAINLESS STEEL ENCLOSURE #120-2S-N1-3-06-SS

G. PROVIDE 316 STAINLESS STEEL UNISTRUT CHANNEL, TYPICAL.

H. PROVIDE UNISTRUT CHANNEL PLASTIC END CAP, TYPICAL.

FOR OFFICIAL USE ONLY
PUBLIC AVAILABILITY TO BE DETERMINED UNDER 5 USC 552

JAMES A MCDONALD LICENSE No 77395 STATE OF LOUISIANA PROFESSIONAL ENGINEER 7/16/25

JACOBS
1100 N GLEBE RD.
SUITE 500
ARLINGTON, VA 22201

REV.	APPROVED DATE	DESCRIPTION	JCN	REDLINE DATE	APVD

DEPARTMENT OF TRANSPORTATION
FEDERAL AVIATION ADMINISTRATION
CENTRAL SERVICE AREA — FORTH WORTH, TX

Jacobs

MALSR
REPLACEMENT RUNWAY 18

MALSR SHELTER SERVICE EQUIPMENT RACK DETAILS

HOUMA — HOUMA-TERREBONNE AIRPORT — LA

HOUMA-TERRABONNE AIRPORT
HOUMA, LOUISIANA

REVIEWED BY	SUBMITTED BY		APPROVED BY
	SUBMITTER'S TITLE		APPROVER'S TITLE
	DESIGNED BY R. GARCIA	ISSUED BY ENGINEERING SERVICES NAVAIDS	DATE 07-16-25 JCN: 22001835
	DRAWN BY R. GARCIA		DRAWING NO. HUM-D-MALSR-ES514 REV.
	CHECKED BY J. MCDONALD		

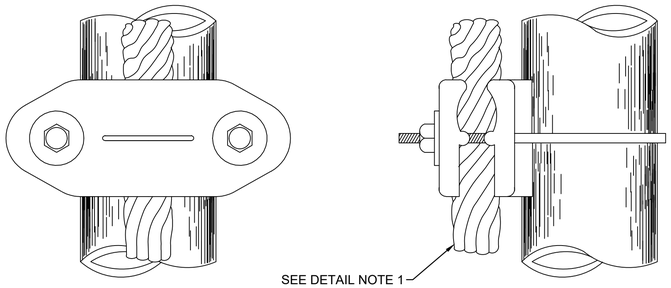

MATERIAL:

CASTING - BRONZE ALLOY
HARDWARE - SILICON BRONZE OR STAINLESS STEEL

SOURCES:

A. BURNDY "GAR" TYPE

B. THOMPSON NO.800 SERIES

C. ANDERSON CONNECTOR "GC" TYPE

D. OR APPROVED EQUAL

NOTES:

1. TWO EACH U-BOLT CLAMPS TO BE USED TO ATTACH AIR TERMINALS TO PIPE STANDARDS.

2. USE PROPER SIZE U-BOLT CLAMP TO FIT CABLE AND PIPE.

1 ES515 U-BOLT TYPE CLAMP DETAIL
SCALE: NTS

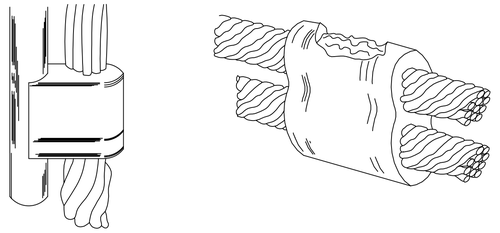

EXOTHERMIC WELD NOTES:

1. DUXSEAL, MADE BY JOHNS-MANVILLE, SHALL BE USED TO SEAL AROUND EACH CABLE ON OUTSIDE OF THE MOLD FOR ALL CABLE CONNECTIONS.

2. THE CABLES SHALL BE CLEANED WITH A WIRE BRUSH AND CLAMPED TO PREVENT THEIR MOVEMENT FROM MOLD PRIOR TO SHOOTING WELD.

3. MOLDS ARE TO BE OF THE TYPE APPROVED FOR PROPER CONNECTION AND CLEANED PRIOR TO SHOT. MOLD SHALL BE DRIED WITH PROPANE TORCH BEFORE USING.

4. MOLDS SHALL NOT BE MODIFIED.

2 ES515 EXOTHERMIC WELD CONNECTIONS DETAIL
SCALE: NTS

RECOMMENDED EXOTHERMIC WELD COMPONENTS

REQUIRED CABLE CONNECTION	MOLD	WELD METAL
THOMPSON NO.32 TO GND. ROD	GPR-188C	250
THOMPSON NO.32 TO NO.32	PTC-8C8C	150
SOLID AWG NO.2 TO NO.32	PTC-8C1T	90
STRANDED AWG NO.2 TO NO.32	PTC-8C1V	115
STRANDED AWG NO.4/0 TO NO.32	PTC-2Q8C	150
STRANDED AWG NO.4/0 TO NO.28R	PTC-2Q8D	200
THOMPSON 28R TO GROUND ROD	GPR-188D	250
STRANDED AWG NO.4/0 TO NO.4/0	PTC-2Q2Q	200
THOMPSON NO.28R TO NO.28R	PTC-8D8D	200
STRANDED AWG NO.4/0 TO AWG NO.2	PTC-2Q1V	150
STRANDED AWG NO.4/0 TO GND. ROD	GPR-182Q	250
NO.32 TO VERTICAL STEEL	VVR8C	200 (SEE NOTE 1)
NO.28R TO VERTICAL STEEL	VVR8D	2-150 (SEE NOTE 1)

NOTES:
1. FOR CABLE TO STEEL PIPE, ADD PIPE DIRECTION AND NORMAL PIPE SIZE TO VV MOLD NUMBER.

EQUIVALENT CATALOG NUMBERS FOR THOMPSON, ROBBINS, AND A/C CABLE

a. THOMPSON NO.32 ROBBINS NO.1 A/C C-122

b. THOMPSON NO.28R ROBBINS NO.604 A/C C-126

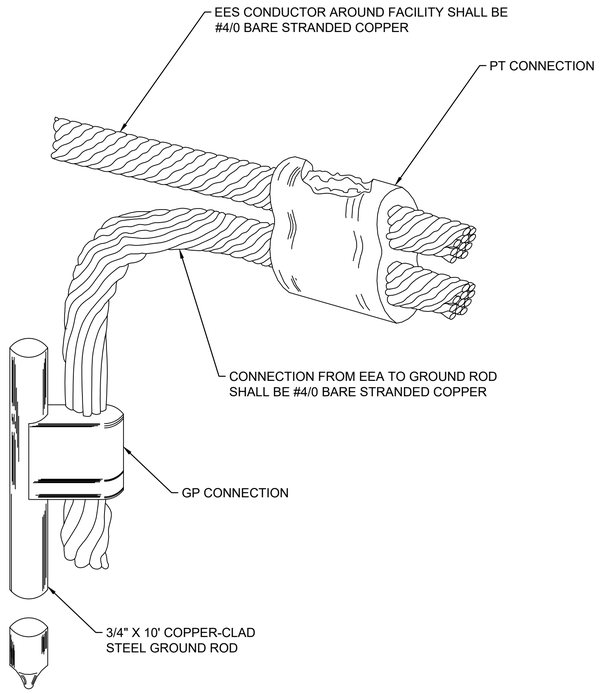

3 ES515 CABLE TO GROUND ROD CONNECTION DETAIL
SCALE: NTS

THE PROCEDURE AND MATERIALS LISTED MEET ALL APPLICABLE CODE REQUIREMENTS LISTED BELOW.
1. NFPA 70 NATIONAL ELECTRICAL CODE 2020, SECTION 250 PART III
2. FAA-STD-19 LATEST VERSION

GROUND RESISTANCE TESTING PROCEDURE FOR CLAMP-ON METER

1. INSTALL ALL COUNTERPOISE CABLE AND ASSOCIATED GROUND RODS AS SHOWN ON CONTRACT DOCUMENTS. EXOTHERMICALLY WELD EACH GROUND ROD TO CABLE. EACH GROUND ROD SHALL BE MINIMUM 10FT LONG BY 3/4" MINIMUM COPPER CLAD GROUND ROD AS SHOWN ON CONTRACT DOCUMENTS. DOCUMENT LOCATION OF EACH ROD AND PROVIDE UNIQUE NUMBER FOR EACH ROD. MEASURE RESISTANCE TO EARTH FOR EACH ROD BY ATTACHING CLAMP ON METER ON ROD BELOW COUNTERPOISE WIRE. DOCUMENT RESULTS ON APPROVED TESTING FORM IN THE PRESENCE OF THE RESIDENT ENGINEER OR AIRPORT REPRESENTATIVE. IF VALUE IS HIGHER THAN 10 OHMS FOR ANY ROD CONFIRM RESULTS WITH RESIDENT ENGINEER AND PROCEED TO STEP 2.

2. FOR ANY GROUND ROD NOT MEETING A MAXIMUM VALUE OF 10 OHMS, INSTALL A 10FT LONG X 3/4" COPPER CLAD SECTIONAL GROUND ROD AT A DISTANCE OF 20' FROM ORIGINAL GROUND ROD. EXOTHERMICALLY WELD NEW ROD WITH ORIGINAL USING BARE #2 AWG BARE COPPER WIRE. MEASURE RESISTANCE TO EARTH OF NEW SECTIONAL GROUND ROD BY ATTACHING CLAMP ON METER ON ROD BELOW GROUND WIRE. IF VALUE IS HIGHER THAN 10 OHMS, DISCONNECT GROUND WIRE, ATTACH A COUPLING TO TOP OF ROD, ATTACH A NEW 10FT SECTION OF ROD AND DRIVE INTO EARTH. EXOTHERMICALLY WELD NEW ROD TO ORIGINAL USING BARE #2 AWG BARE COPPER COUNTERPOISE WIRE. MEASURE RESISTANCE TO EARTH OF NEW 20' SECTIONAL GROUND ROD BY ATTACHING CLAMP ON METER ON ROD BELOW COUNTERPOISE WIRE. IF RESULTS ARE UNSATISFACTORY, REPEAT PROCEDURE UNTIL ROCK IS ENCOUNTERED, EQUIPMENT IS UNABLE TO DRIVE THE ROD, OR A TOTAL DEPTH OF 40FT IS ACHIEVED. PROCEED TO STEP 3.

3. INSTALL ANOTHER 10FT LONG BY 3/4" GROUND ROD IN A 6" AUGERED HOLE. LOCATE NEW ROD 20' FROM OTHER GROUND RODS. SURROUND GROUND ROD WITH AN APPROVED EARTHING ENHANCEMENT MATERIAL UP TO WITHIN 6" OF TOP OF ROD. CONNECT THE RODS WITH A BARE #2 AWG COPPER CONDUCTOR VIA EXOTHERMIC WELD. MEASURE RESISTANCE TO EARTH OF NEW GROUND ROD AND DOCUMENT RESULTS.

GROUND RESISTANCE TESTING PROCEDURE FOR 3 POINT METER FALL OF POTENTIAL METHOD

1. INSTALL GROUND ROD AS SHOWN ON CONTRACT DOCUMENTS. EACH GROUND ROD SHALL BE MINIMUM 10FT LONG BY 3/4" MINIMUM COPPER CLAD GROUND ROD AS SHOWN ON CONTRACT DOCUMENTS. DOCUMENT LOCATION OF EACH ROD AND PROVIDE UNIQUE NUMBER FOR EACH ROD. DO NOT CONNECT COUNTERPOISE CABLE TO ROD. MEASURE RESISTANCE TO EARTH FOR EACH ROD AND DOCUMENT RESULTS ON APPROVED TESTING FORM IN THE PRESENCE OF THE RESIDENT ENGINEER OR AIRPORT REPRESENTATIVE. IF VALUE IS HIGHER THAN 10 OHMS FOR ANY ROD CONFIRM RESULTS WITH RESIDENT ENGINEER AND PROCEED TO STEP 2.

2. FOR ANY GROUND ROD NOT MEETING A MAXIMUM VALUE OF 10 OHMS, INSTALL A 10FT LONG X ¾" COPPER CLAD SECTIONAL GROUND ROD AT A DISTANCE OF 20' FROM ORIGINAL GROUND ROD. MEASURE RESISTANCE TO EARTH OF NEW SECTIONAL GROUND ROD. IF VALUE IS HIGHER THAN 10 OHMS, ATTACH A COUPLING TO TOP OF ROD, ATTACH A NEW 10FT SECTION OF ROD AND DRIVE INTO EARTH. MEASURE RESISTANCE TO EARTH OF NEW 20' SECTIONAL GROUND ROD. IF RESULTS ARE UNSATISFACTORY, REPEAT PROCEDURE UNTIL ROCK IS ENCOUNTERED, EQUIPMENT IS UNABLE TO DRIVE THE ROD, OR A TOTAL DEPTH OF 40FT IS ACHIEVED. MEASURE RESISTANCE TO EARTH OF NEW GROUND ROD AND DOCUMENT RESULTS. EXOTHERMICALLY WELD NEW ROD TO ORIGINAL USING BARE #6 AWG COPPER COUNTERPOISE WIRE. PROCEED TO STEP 3.

3. INSTALL ANOTHER 10FT LONG BY 3/4" GROUND ROD IN A 6" AUGERED HOLE. LOCATE NEW ROD 20' FROM OTHER GROUND RODS. SURROUND GROUND ROD WITH AN APPROVED EARTHING ENHANCEMENT MATERIAL UP TO WITHIN 6" OF TOP OF ROD. MEASURE RESISTANCE TO EARTH OF NEW GROUND ROD AND DOCUMENT RESULTS. CONNECT THE RODS WITH A #2 AWG BARE STRANDED COPPER CONDUCTOR VIA EXOTHERMIC WELD.

4 ES515 FAA GROUND RESISTANCE TESTING PROCEDURE DETAIL
SCALE: NTS

FOR OFFICIAL USE ONLY
PUBLIC AVAILABILITY TO BE DETERMINED UNDER 5 USC 552

JAMES A MCDONALD LICENSE No 77395 7.16.25 STATE OF LOUISIANA PROFESSIONAL ENGINEER

JACOBS
1100 N GLEBE RD.
SUITE 500
ARLINGTON, VA 22201

Jacobs

HOUMA-TERRABONNE AIRPORT
HOUMA, LOUISIANA

REV.	APPROVED DATE	DESCRIPTION	JCN	REDLINE DATE	APVD

DEPARTMENT OF TRANSPORTATION
FEDERAL AVIATION ADMINISTRATION
CENTRAL SERVICE AREA FORTH WORTH, TX

MALSR
REPLACEMENT RUNWAY 18

MALSR GROUNDING CONNECTION DETAILS

HOUMA HOUMA-TERREBONNE AIRPORT LA

REVIEWED BY	SUBMITTED BY	APPROVED BY
	SUBMITTER'S TITLE	APPROVER'S TITLE
	DESIGNED BY R. GARCIA	ISSUED BY: ENGINEERING SERVICES NAVAIDS
	DRAWN BY R. GARCIA	DATE 07-16-25 JCN: 22001835
	CHECKED BY J. MCDONALD	DRAWING NO. HUM-D-MALSR-ES515 REV.

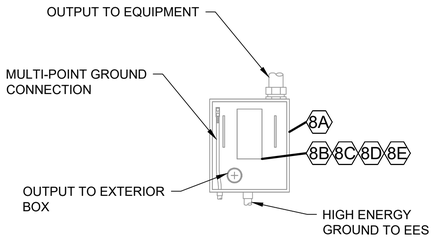

DETAIL 'AA'

SCALE: 1" = 1'-0"

FLASHER CONTROL JUNCTION BOX

(SHOWN WITH DOOR REMOVED)

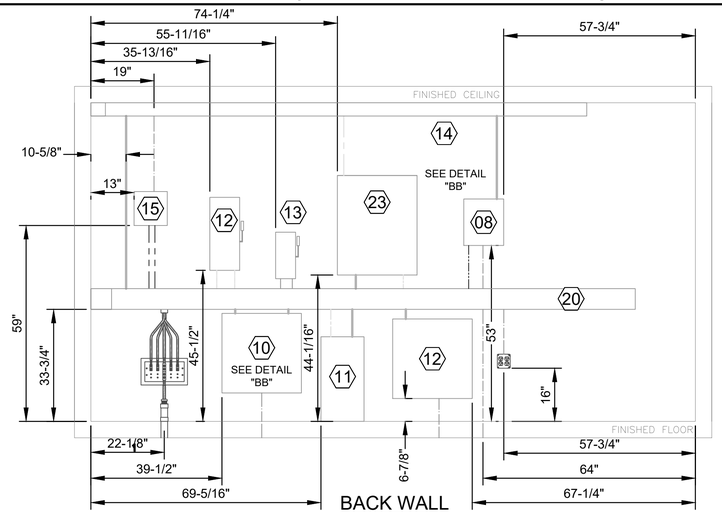

BACK WALL VIEW

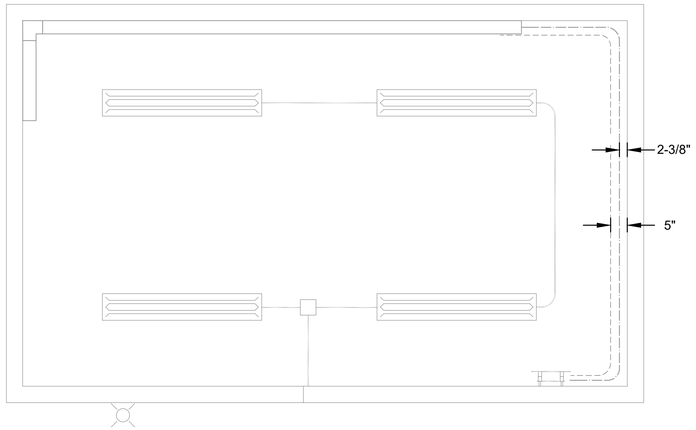

LIGHTING/CEILING CONDUIT VIEW

FAALC AJW-L521 INSTALLED CONDUIT LEGEND:

- 1/2" CONDUIT
- 3/4" CONDUIT
- 1" CONDUIT
- 1-1/4" CONDUIT
- 1-1/2" CONDUIT
- 2" CONDUIT
- 3" CONDUIT
- 4" CONDUIT
- CONDUIT THROUGH WALL

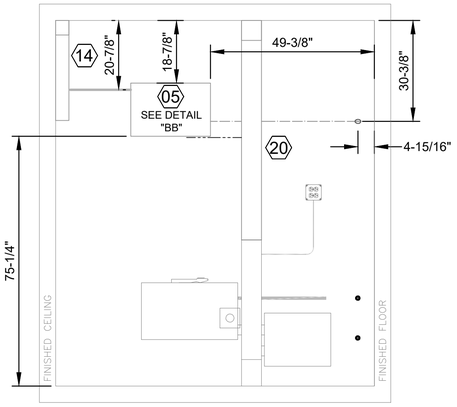

LEFT WALL VIEW

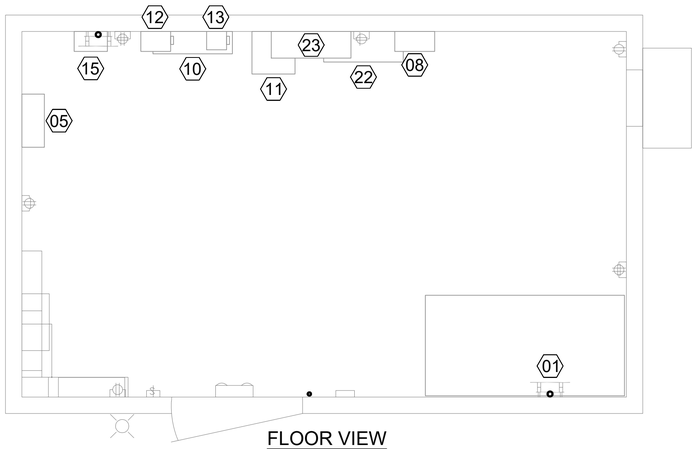

FLOOR VIEW

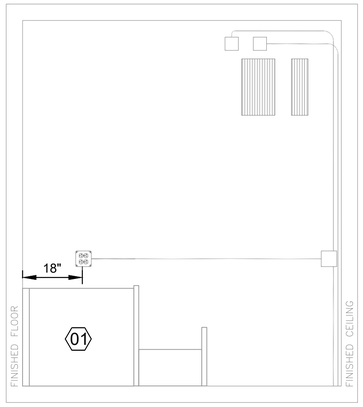

RIGHT WALL VIEW

BILL OF MATERIALS EQUIPMENT INSTALLED BY FAALC			
ITEM #	QUANTITY REQUIRED	PART #	DESCRIPTION
1	1	STANLEY VIDMAR	WORK STATION (55-1/2" X 60" X 30")
3	4	FAA	CHANNEL BRACKET, CONDUIT MTG (CUT AS REQUIRED)
5	1	FAA	COMMUNICATION DATA/COMM JUNCTION BOX
5A	1	S66M1-25	TELECOMMUNICATIONS PUNCH BLOCK
5B	2	CITEL, 280T	SURGE PROTECTION, 170 VOLTS
5C	1	CITEL, F132.B25QC66	BASE, HOLDS UP TO 13 E280 MODULES
6	1	G1-23-1140 REV-A	MALSR CONTROL CABINET (24" X 20" X 8")
8	1	FAA	FLASHER CONTROL RMS JUNCTION BOX, 240V (12" X 14" X 6")
8A	0	CITEL, E28012	SURGE PROTECTION, 12 VOLTS DC
8B	0	CITEL, E28024	SURGE PROTECTION, 24 VOLTS DC
8C	0	CITEL, E28048	SURGE PROTECTION, 48 VOLTS DC
8D	6	CITEL, E280T	SURGE PROTECTION, 170 VOLTS DC
8E	1	CITEL, FPSU16	BASE, DIN RAIL, HOLDS UP TO 8 E280 MODULES
9	2	16H12BLP	ASSEMBLY, INTERFACE BOX (12" X 16" X 8")
10	1	FAA, DE-D-3616	STEADY BURNER FLASHER OUTPUT TVSS JUNCTION BOX, 240V (24" X 24" X 6-1/2")
10A	6	766464-000	SURGE ARRESTOR 40MM
10B	1	FAA, DE-C-3507	SURGE ARRESTOR, BASE PLATE
11	1	FA-11504	MALS 15KVA TRANSFORMER (13" X 23" X 13")
12	1	SQUARE-D, H223N	100A, POWER DISCONNECT, 240V (18-1/4" X 10-1/2" X 6-1/2")
13	1	SQUARE-D, H222N	60 AMP, FLASHER OUTPUT POWER DISCONNECT, POWER OUT, 240V (13-1/2" X 7-1/2" X 6-1/2")
14	1	HOFFMAN	CONDUIT, RACEWAY (4" X 4" SECTIONS)
15	1	CONTROL INDUSTIES RC1T5A	MALSR AIR TO GROUND RECEIVER CONTROLLER (10" X 12" X 6")
17	0	FAA	MALSR GROUND TO GROUND RRCIU (20" X 16" X 7.4")
18	0	FAA	MALSR GROUND TO GROUND DECODER (24" X 20" X 6")
19	0	FAA	MALSR GROUND TO GROUND RECEIVER (13" X 16" X 7")
20	1	HOFFMAN	CONDUIT, RACEWAY (6" X 6" SECTIONS)
22	1	FA-21000/15	POWER ISOLATION UNIT (24" X 24" X 9-1/2")
23	1	TYPE-FA-21000	MALSR CONTROL CABINET (27" X 34" X 13-1/2")
24	1	FAA	EXT. CONTROL CABINET (20" X 16" X 10")

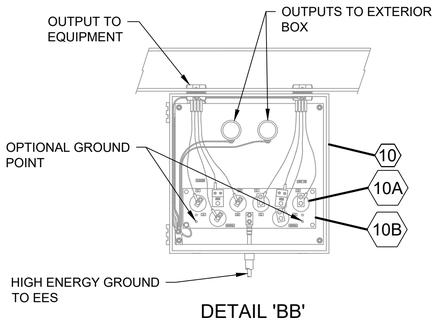

DETAIL 'BB'

SCALE: 1" = 1'-0"

STEADY BURN AND FLASHER OUTPUT POWER JUNCTION BOX

(SHOWN WITH DOOR REMOVED)

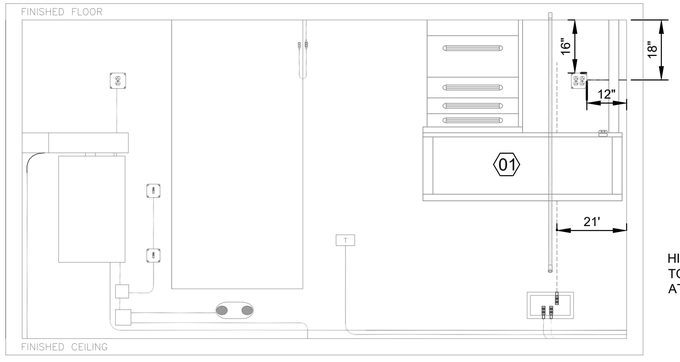

FRONT WALL VIEW

1 / ES521 SHELTER INTERIOR ELEVATIONS

SCALE: 1/2" = 1'-0"

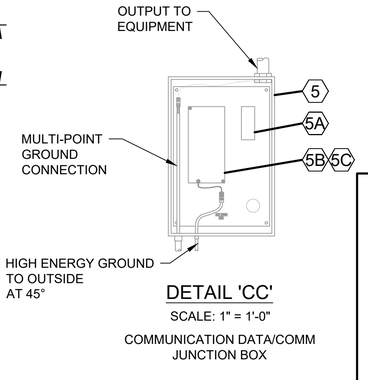

DETAIL 'CC'

SCALE: 1" = 1'-0"

COMMUNICATION DATA/COMM JUNCTION BOX

(SHOWN WITH DOOR REMOVED)

GENERAL NOTES:

1. REFER TO DUPONT STANDARD SHELTER DRAWINGS ON SHEETS ES523, ES524, & ES525 FOR DETAILS ON BUILDING STRUCTURE AND STANDARD FIXTURES.
2. ALL WALLS ARE 4-15/16" THICK.
3. SEAL ALL PENETRATIONS THROUGH BUILDING WALLS WITH SILICONE SEALER.

THIS DRAWING PROVIDED FOR REFERENCE ONLY

FOR OFFICIAL USE ONLY
PUBLIC AVAILABILITY TO BE DETERMINED UNDER 5 USC 552

JAMES A MCDONALD LICENSE No 77395 7/16/25 STATE OF LOUISIANA PROFESSIONAL ENGINEER

JACOBS
1100 N GLEBE RD.
SUITE 500
ARLINGTON, VA 22201

REV.	APPROVED DATE	DESCRIPTION	JCN	REDLINE DATE	APVD

Jacobs

DEPARTMENT OF TRANSPORTATION
FEDERAL AVIATION ADMINISTRATION
CENTRAL SERVICE AREA — FORTH WORTH, TX

MALSR
REPLACEMENT RUNWAY 18

TYPICAL 10' X 16' LEFT HAND CONFIGURATION
MALSR SHELTER INTERIOR DETAILS

HOUMA — HOUMA-TERREBONNE AIRPORT — LA

REVIEWED BY	SUBMITTED BY	APPROVED BY
	SUBMITTER'S TITLE	APPROVER'S TITLE
	DESIGNED BY R. GARCIA	ISSUED BY: ENGINEERING SERVICES NAVAIDS
	DRAWN BY R. GARCIA	DATE 07-16-25 JCN: 22001835
	CHECKED BY J. MCDONALD	DRAWING NO. HUM-D-MALSR-ES521 REV.

HOUMA-TERRABONNE AIRPORT
HOUMA, LOUISIANA

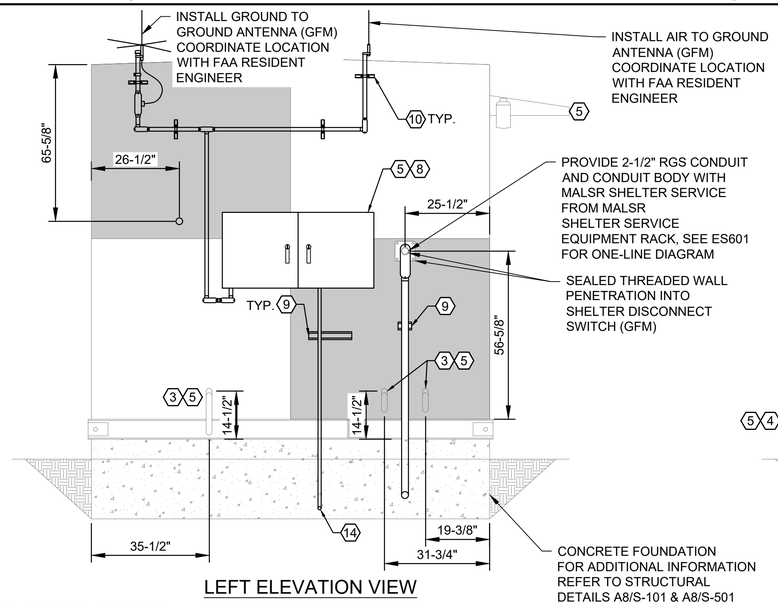

LEFT ELEVATION VIEW

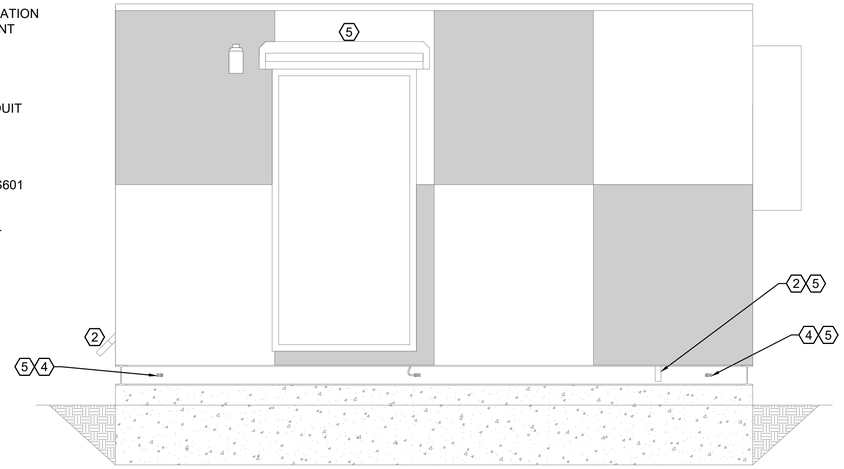

FRONT ELEVATION VIEW

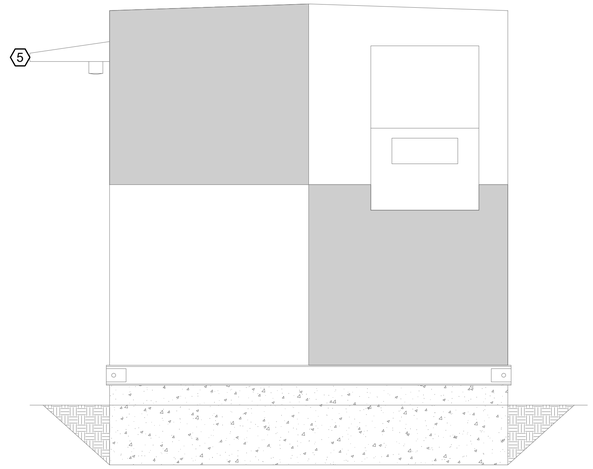

RIGHT ELEVATION VIEW

#KEYED NOTES:

1. REFER TO DUPONT STANDARD SHELTER DRAWINGS ON SHEETS ES523, ES524, & ES525 FOR DETAILS ON BUILDING STRUCTURE AND STANDARD FIXTURES.
2. EXTERIOR CONDUIT SHOWN, TIES TO SITE EES.
3. HIGH ENERGY/GEC GROUND CONDUITS EXTEND FROM EXTERIOR OF SHELTER AT 45°. TVSS UNITS MUST BE GROUNDED TO THE EES DURING INSTALLATION.
4. SHELTER SKID SHALL BE GROUNDED TO THE EES IN A MINIMUM OF TWO PLACES.
5. ITEMS ARE FIELD INSTALLED.
6. INSTALL MALSR & RAIL POWER JUNCTION BOX, 20" H X 16" W X 10" D, NEMA 4X 316 STAINLESS STEEL HINGED LOCKABLE ENCLOSURE (GFM). SHOWN WITH DOOR OFF TO SHOW CONDUIT SLEEVES THROUGH SHELTER WALL.
7. INSTALL RAIL CONTROL JUNCTION BOX, 16" H X 12" W X 8" D, NEMA 4X 316 STAINLESS STEEL HINGED LOCKABLE ENCLOSURE (GFM). SHOWN WITH DOOR OFF TO SHOW CONDUIT SLEEVE THROUGH SHELTER WALL.
8. INSTALL ANTENNA AND FUTURE CONTROL JUNCTION BOX, 24" H X 48" W X 10" D, NEMA 4X STAINLESS STEEL ENCLOSURE (GFM). FIELD VERIFY ENCLOSURE MOUNTING LOCATION, CONDUIT SLEEVE LOCATION(S), AND CONDUIT SLEEVE SIZE(S) FOR THROUGH SHELTER WALL WITH FAA RESIDENT ENGINEER. INSTALL ANTENNA CABLES FOR AIR TO GROUND AND GROUND TO GROUND ANTENNAS, THESE CABLES ARE GFM.
9. PROVIDE 316 STAINLESS STEEL UNISTRUT AND SECURE CONDUIT TO SHELTER, TYPICAL.
10. PROVIDE TWO HOLE STAINLESS STEEL CONDUIT STRAP AND SECURE CONDUIT TO SHELTER.
11. PROVIDE 3" PVC COATED RGS CONDUIT WITH MALSR POWER CABLES FOR CIRCUIT "MD1" TO NEARBY FAA POWER HANDHOLE, SEE SHEET ES402 FOR ROUTING AND ADDITIONAL INFORMATION.
12. PROVIDE 2" PVC COATED RGS CONDUIT WITH RAIL POWER CABLES FOR CIRCUIT "FP" TO NEARBY FAA POWER HANDHOLE, SEE SHEET ES402 FOR ROUTING AND ADDITIONAL INFORMATION.
13. PROVIDE 2" PVC COATED RGS CONDUIT WITH RAIL CONTROL CABLES FOR CIRCUIT "FC" TO NEARBY FAA CONTROL HANDHOLE, SEE SHEET ES402 FOR ROUTING AND ADDITIONAL INFORMATION.
14. PROVIDE 1" PVC CONDUIT WITH #2 INSULATED GREEN COPPER GROUND WIRE TO EES, SEE SHEET ES402 FOR ROUTING AND ADDITIONAL INFORMATION.

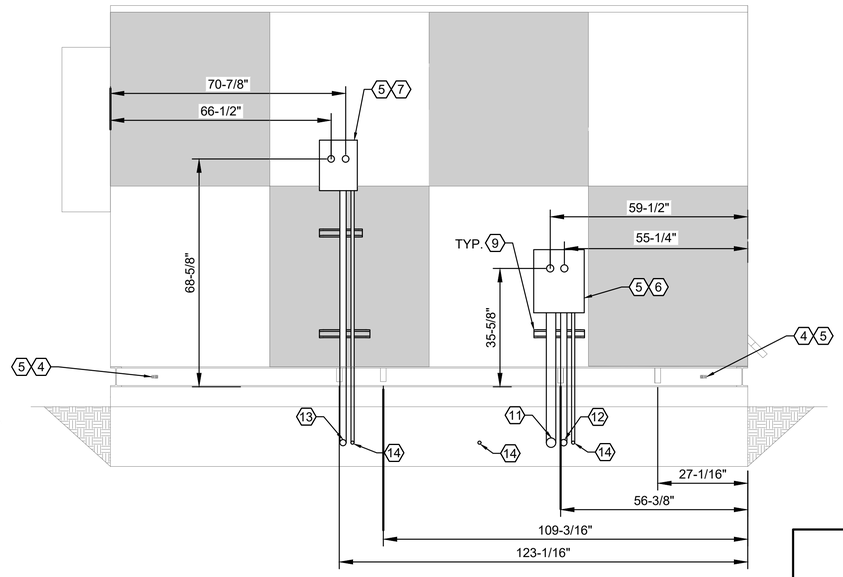

REAR ELEVATION VIEW

1 ES522 SHELTER EXTERIOR ELEVATIONS
SCALE: 1/2" = 1'-0"

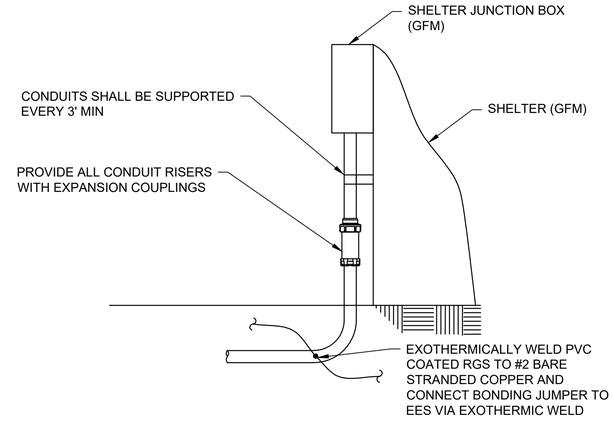

2 ES522 CONDUIT RISER DETAIL
SCALE: 1/2" = 1'-0"

GENERAL NOTES:

1. REFER TO DUPONT STANDARD SHELTER DRAWINGS ON SHEETS ES523 & ES524 FOR DETAILS ON BUILDING STRUCTURE AND STANDARD FIXTURES.
2. ALL WALLS ARE 4-15/16" THICK.
3. SEAL ALL PENETRATIONS THROUGH BUILDING WALLS WITH 3M 4200 MARINE SEALANT OR APPROVED EQUAL AT ALL WALL PENETRATIONS.
4. PROVIDE ALL PVC COATED OR RGS CONDUIT RISERS WITH EXPANSION COUPLINGS. CONDUITS SHALL BE SUPPORTED BY CONDUIT STRAPS EVERY 3' MIN.
5. ALL THREADED BOLT AND CONDUIT CONNECTIONS TO BE COATED IN LOCTITE MARINE GRADE ANTI-SEIZE.
6. ALL METALLIC CONDUITS ENTERING ENCLOSURES SHALL BE BONDED VIA INSULATED GROUNDING BUSHINGS INSTALLED WITHIN THE ENCLOSURE. PROVIDE MYERS HUB, OR APPROVED EQUAL, FOR ALL CONDUIT ENTRIES INTO ENCLOSURES AND EQUIPMENT. PROVIDE BONDING JUMPER TO GROUND BUS FROM GROUNDING BUSHING THE SAME SIZE AS THE EQUIPMENT GROUNDING CONDUCTOR (EGC). INSTALL IN ACCORDANCE WITH FAA-STD-19G FIGURE 7 ALONG WITH SECTION 4.5.4 "GROUNDING BUSHINGS FOR CONDUIT RACEWAYS".

THIS DRAWING PROVIDED FOR REFERENCE ONLY

FOR OFFICIAL USE ONLY
PUBLIC AVAILABILITY TO BE DETERMINED UNDER 5 USC 552

JACOBS
1100 N GLEBE RD.
SUITE 500
ARLINGTON, VA 22201

REV.	APPROVED DATE	DESCRIPTION	JCN	REDLINE DATE	APVD

DEPARTMENT OF TRANSPORTATION
FEDERAL AVIATION ADMINISTRATION
CENTRAL SERVICE AREA — FORTH WORTH, TX

MALSR
REPLACEMENT RUNWAY 18

TYPICAL 10' X 16' LEFT HAND CONFIGURATION
MALSR SHELTER EXTERIOR DETAILS

HOUMA — HOUMA-TERREBONNE AIRPORT — LA

JAMES A MCDONALD LICENSE No 77395 7.16.25 STATE OF LOUISIANA PROFESSIONAL ENGINEER

HOUMA-TERRABONNE AIRPORT
HOUMA, LOUISIANA

REVIEWED BY	SUBMITTED BY	APPROVED BY
	SUBMITTER'S TITLE	APPROVER'S TITLE
DESIGNED BY R. GARCIA	ISSUED BY ENGINEERING SERVICES NAVAIDS	DATE 07-16-25 JCN: 22001835
DRAWN BY R. GARCIA		DRAWING NO. HUM-D-MALSR-ES522 REV.
CHECKED BY J. MCDONALD		

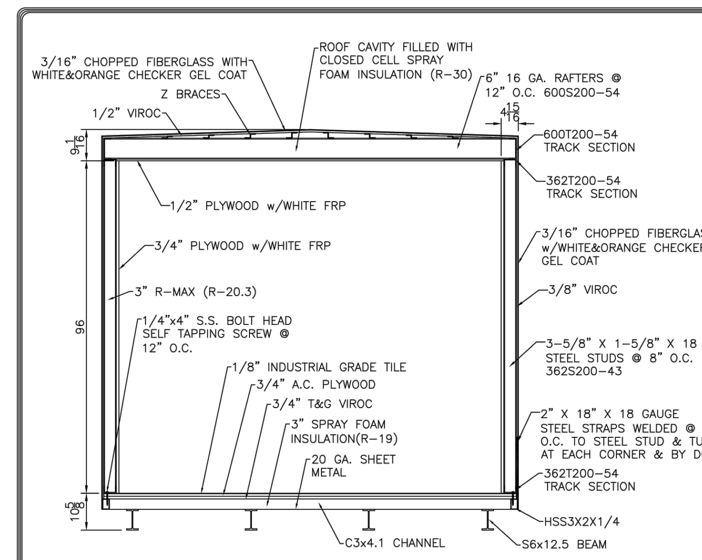

CONSTRUCTION DETAIL
SCALE: 1/2"=1'-0"

GENERAL NOTES

1. ALL FIBERGLASSED OPENINGS TO OVERLAP EDGES OF THE OPENINGS AND DOOR A MINIMUM OF 1",
2. ALL FAN, A/C AND LOUVER OPENINGS IN WALL TO BE CUT OUT AND FINISHED WITH INTERIOR AND EXTERIOR BOARDS COMPLIMENTARY TO THE SHELTER WHEN ITEMS ARE NOT INSTALLED WHEN SHELTER WAS ORDERED,
3. THE EXTERIOR CHECKER'S ARE AS FOLLOWS:
   8' LENGTH = 4' CHECK
   10' LENGTH = 5' CHECK
   12' LENGTH = 4' CHECK
   16' LENGTH = 4' CHECK
   20' LENGTH = 4' CHECK
   8' WIDE = 4' CHECKS
   10' WIDE = 5' CHECKS
   6' WIDE = 3' CHECKS ROOF IS CHECKER
   DOOR, A/C AND HOODS ARE WHITE,
4. USE CLEAR SILICONE ON FIBERGLASSED AREAS.

NAILING SCHEDULE

ROOF: USE 8d NAILS AT 6" OC AND 4" OC ON 4' ENDS
FLOOR: USE 10d NAILS AT 6" OC AND 4" OC ON 4' ENDS
SHEAR WALLS: USE 6d NAILS AT 4" OC
LONG WALLS: USE #66G NAILS AT 4" OC

ELECTRICAL NOTES

1. ALL INTERIOR ELECTRICAL WORK IS SURFACE MOUNT IN EMT CONDUIT. MINIMUM IS SIZE 3/4", SEE CONDUIT LEGEND.
2. ALL 15 & 20 AMP CIRCUITS HAVE #12 THHN WIRING.
3. EXTERIOR GROUNDING SYSTEM METER AND SERVICE BY THE ELECTRICAL CONTRACTOR.
4. PANEL BOARD ENCLOSURE GROUNDING BAR AND SERVICE ENTRANCE RACEWAY SHALL BE EFFECTIVELY BONDED TOGETHER.
5. HEAT SHRINK LABELING FOR ALL CIRCUITS AND ITEMS.
6. NEUTRAL BAR SHALL BE ISOLATED FROM THE GROUNDING BAR IN THE MAIN DISCONNECT & PANEL BOARD.
7. FLEXIBLE NONMETALLIC CONDUIT SHALL NOT BE USED. USE FLEXIBLE METAL CONDUIT IF NECESSARY.
8. ALL FEEDER AND BRANCH CIRCUITS INCLUDING NEUTRAL CONDUCTORS SHALL BE IDENTIFIED AT BOTH ENDS OF CONDUCTOR W/ PANEL AND CIRCUIT NUMBER INDICATED.
9. PANEL BOARD AND DISCONNECT SHALL HAVE NAME PLATES SHOWING PERTINENT INFORMATION MADE OF RIGID PLASTIC, AND ENGRAVED WITH 3/8" TEXT ATTACHED WITH WEATHER PROOF BONDING MATERIAL.
10. 12 TON HEX CRIMP TO BE USED ON GROUNDING.
11. GROUNDING TO HAVE SS BOLTS AND NUTS ON DOOR USE SS BOLTS AND NUTS.
12. ALL CIRCUIT WIRING ON LINE #1 TO BE BLACK AND LINE #2 TO BE RED.
13. L1 SERVICE WIRE TO BE BLACK, L2 SERVICE WIRE TO BE RED, LN SERVICE WIRE TO BE WHITE.

SCHEDULE – PANEL

PANEL GIA 120/240V 1 PHASE 200 AMP. MAIN LUG SURFACE MOUNT

DESCRIPTION	CB	#	LOAD	LOAD	#	CB	DESCRIPTION
LIGHTS	20/1	1	550/3456		2	30/2	HVAC
SPARE	20/1	3		3456	4		
RECEPTACLES	20/1	5	360/720		6	20/1	RECEPTACLES
SPARE	20/1	7		180	8	20/1	GFCI RECEPT
SPARE	20/1	9	360		10	20/1	FAN / LOUVER
		11			12		
RECEPTACLES	20/1	13	360		14		
		15			16		
		17			18		
		19			20		
		21			22		
		23			24		
		25			26		
		27			28		
		29			30		
PHASE LOAD			5806	3636			
TOTAL LOAD			5806w / 120v = 48.3 AMPS				

CONDUIT DETAILS ARE EXACT LOCATIONS OF CONDUIT ENTRY INTO J-BOXES

MATERIAL LIST

ITEM#	QTY.	DBI #	VENDOR/PART#	DESCRIPTION
1	1	2058	D-C/D00037	3'-0" X 6'-8" HEAVY DUTY DOOR HINGE RIGHT WITH A DOOR CLOSURE, THREE-POINT LATCH, BEST CORE, YALE LOCKSET, 24" DEEP FIBERGLASS DOOR SHIELD, PADLOCK EYES, PAINTED WHITE, TOP HINGE KEYCOVER WITH (2) KEYS AND (1) CORE KEY
2	1	1874	50123	THERMOSTAT ICM SS COOL/HEAT SS HP AUTO
3	2	3793	CSB1-20 SP 20A	SWITCH, SP 20A 120-277V BRN AC SW
4	4	10073	LBL4 LP840 MEZ158729	4' LED WRAPAROUND W/ CLASS B DRIVER (TO BE FCC PART 15, CLASS B COMPLIANT)
5	NA.	–	–	–
6	4	8952	CR20	125V RATED QUAD RECEPTACLES, 20 AMP, BROWN, COMMERCIAL GRADE (2 SHIPS LOOSE)
7	1	5071	#1UHH2	DAYTON THERMOSTAT TO OPERATE FAN
8	3	3060-80	PVC 10080	1" SCHEDULE 80 GRAY PVC EXIT AT 45° WITH SQUARE CUT EXTERIOR END 3" CLEAR OF FIBERGLASS FOR FIELD CONNECTION
9	1 1 4 1	12921 11474 4029 1472W	SQUARE D VH224N SQUARE D AL20DTF BUS NON-200 –	HEAVY DUTY SAFETY SWITCH, FUSED, 200 AMP, 2 POLE, 240V NEMA 1, NEUTRAL FACTORY INSTALLED SAFETY SWITCH LUG KIT, TWO #6-250MCM 200 AMP FUSES, 2 FUSES SHIP LOOSE STEEL ENTRANCE PLATE PAINTED WHITE, 2-1/2" 6"X6" PLATE
10	1 1 1	13296 1887 1888	MAH1020AA050A++2+1E AKC35++++++ 80674 80677	MARVAIR WALL MOUNT, 11EER, R-454B REFRIGERANT, SINGLE -FIXED SPEED COMPRESSOR, 20,000 BTU, AIR CONDITIONER, 208/230V-1PH-60HZ, 5KW HEAT, SOLID FRONT DOOR, LOW AMBIENT W/EFS, TOP SUPPLY/BOTTOM RETURN, RIGHT HAND COMPRESSOR LOCATION, 2" PLATED FILTER, COASTAL ENVIRONMENTAL PACKAGE, REV C3, STAINLESS STEEL EXTERIOR VPG-20S GRILL SUPPLY 20X8 VPG-20R GRILL RETURN 20X12
11	1 1 1	5038 3868 5171	SQD NQ30L2C SQD MH32BE SQD NC32SHRSBC	200 AMP. MAIN LUG 20" PANEL W/ 30 CIRCUITS, BOLT ON BREAKERS AND #CB23 GROUND LUG KIT PANEL BOARD ENCLOSURE BOX TYPE 1 32"Hx20"W PNLBD COVER/TRIM NF T-1
12	1	6879-3	RAYVOSS #120-2S-M1-3-06-A	120 – 240V SINGLE PHASE 80MM STRIKESORB SURGE ARRESTOR, CLOSE DISCONNECT, NO 90°S
13	NA.	–	–	–
14	1	3519	DAYTON #484X38	12" EXHAUST FAN w/90° FIBERGLASS HOOD PAINTED WHITE, 850 CFM @ .125SP
15	1 1	3487 3498	DAYTON #4C556 DAYTON #24N064	12" X 12" MOTORIZED LOUVER CONTROLLED BY #1UHH2 w/90° FIBERGLASS HOOD PAINTED WHITE w/ENCLOSED FILTER
16	NA.	–	–	–
17	1 1	3707 3720	RAB VXBR100DG PMC T-15	EXTERIOR LIGHT WITH GLOBE AND GUARD (WITH LED BULB) PHOTO CONTROL MODEL T-15
18	1	3696	LIT ELM2L-M12	COMMERCIAL LED 2-HEAD AIMABLE EMERGENCY LIGHT 120/277V WHITE
19	1	8952	CR20	GFI BREAKER PROTECTED DUPLEX RECEPTACLE
20	2 8 4 24 16 1 1 1	1440 4370 1441 1458 4309 7370 1461 4269	DUPONT	6" x 12" x 1/4" COPPER BAR (1 SHIPS LOOSE) 3/8" x 1-1/2" PLATED LAG GROUND BAR BRACKET 2165-1A RED SEAL INSULATORS-1/4" 1/4" x 1" SS HEX HEAD BOLTS 8 x 14 PLEXI PLATE SUPPLEMENTAL 8 x 14 PLEXI PLATE MAIN GROUND 1/4"-20x12" PLT. RODS, 12' SECT. ZINC PLATED 47257 PER FOOT
21	1	8214	UNT 664SCNK	N1 SCREW COVER PULL BOX NO K.O. POWDER COATED
22	1	–	CUSTOM	1-1/2" SCHEDULE 80 PVC EXITS THROUGH FLOOR
23	NA.	–	–	–
24	1 1 1 1 1	2718 5414 2722 2721 2725	6624GNK 6660GNK 6696GNK 66120GNK 66L	6"x6"x24" NM1 COMBO WIREWAY wo/KO 6"x6"x60" NM1 COMBO WIREWAY wo/KO 6"x6"x96" NM1 COMBO WIREWAY wo/KO 6"x6"x120" NM1 COMBO WIREWAY wo/KO 6x6 WIREWAY 90 DEGREE
25	1	4204	GS112524SP1.75	HARGER LIGHTNING PROTECTION, 2 HOLE 24" GROUND STRAP
26	NA.	–	–	–
27	2	3062-80	PVC 15080	1-1/2" SCHEDULE 80 PVC FOR GROUNDING (1 SHIPSLOOSE)
28	2	2722	6696GNK	6"X6"X96" NM1 COMBO WIREWAY WO/KO
29	1	3060-80	PVC 10080	1" SCHEDULE 80 PVC FOR DOOR GROUNDING
30	1 4	12920 13053	SQUARE D VH223N BUSMAN LPJ-70SP	HEAVY DUTY SAFETY SWITCH, FUSED, 100 AMP, 2 POLE, 240V, NEMA 1, NEUTRAL FACTORY INSTALLED 70 AMP CLASS J FUSES, 2 FUSES SHIP LOOSE

NOTE: 1. DO NOT BOND GROUND & NEUTRAL INSIDE MAIN DISCONNECT.

REV	DATE
1	02/05/25
2	02/14/25

DUPONT BUILDING, INC.
100 RITA DRIVE
BELL CITY, LA. 70630
337/905-5928
FAX 337/905-5268
www.dupontbuilding.com

CUSTOMER: FEDERAL AVIATION ADMIN.
HOUMA-TERREBONNE AIRPORT RWY 18 MALSR W/A2G G2G

SIZE: 10' X 16' X 8'
SHEET TITLE: MATERIAL LIST & DETAILS

0371

SERIAL NO. –
DRAWING NO. 25007
DRAWN K. SAVOIE
RELEASE DATE 01/30/2025
CHECKED BY:/DATE/REV

SHEET NO. 1 OF 3
SCALE: 1/2"=1' 0"

CLIN # 003,031,051,055,077,071,047,095

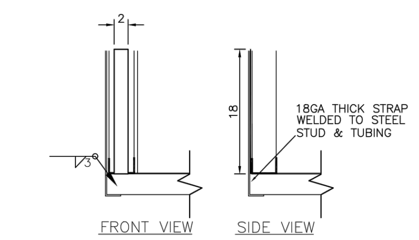

NOTE: STRAP ON EACH CORNER

STRAP DETAILS
SCALE: 1"=1'-0"

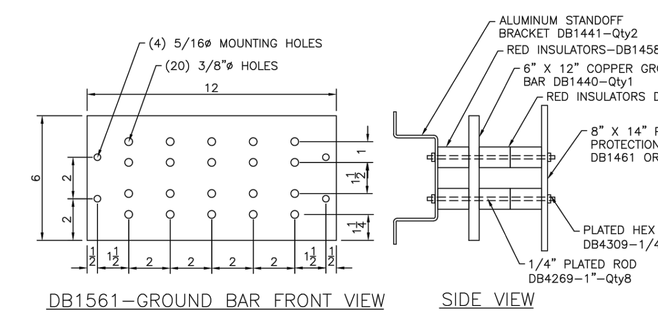

DB1561-GROUND BAR FRONT VIEW   SIDE VIEW

GROUND BAR DETAILS
SCALE: 3"=1'-0"

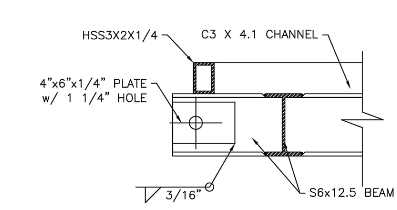

LIFTING EYE
SCALE: 1 1/2"=1'-0"

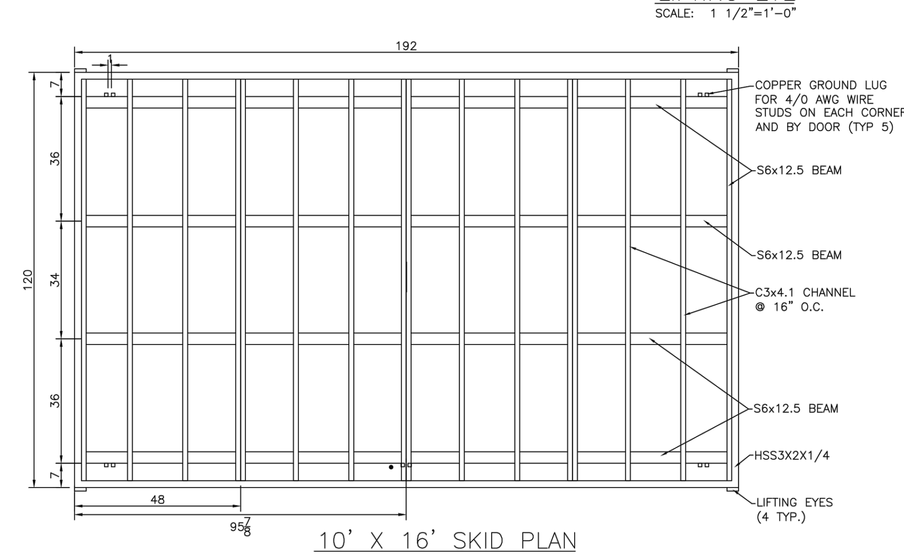

10' X 16' SKID PLAN

DESIGN LOADS

400 PSF – LIVE FLOOR
70 PSF – LIVE ROOF
150 MPH – WIND
ZONE 4 – SEISMIC

SHIP LOOSE LIST

(6) TIE DOWN PLATES
(1) FIBERGLASS DOOR HOOD w/SILICONE AND SCREWS
(1) EMERGENCY LIGHT BATTERY
(2) 200A EXTRA FUSES
(2) 70A EXTRA FUSES
(1) MAIN GROUND PLATE WITH 1-1/2" SCHEDULE 80 PVC
(2) QUAD RECEPTACLE
(30') 3/4" EMT CONDUIT

CONDUIT LEGEND

3/4" CONDUIT –
1" PVC –
1-1/2" PVC –
FLEX CONDUIT –
CONDUIT THROUGH FLOOR AND WALL

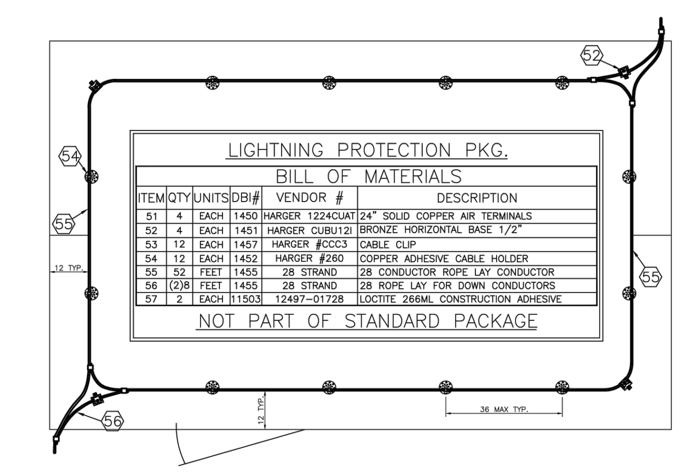

LIGHTNING PROTECTION PKG.

BILL OF MATERIALS

ITEM	QTY	UNITS	DBI#	VENDOR #	DESCRIPTION
51	4	EACH	1450	HARGER 1224CUAT	24" SOLID COPPER AIR TERMINALS
52	4	EACH	1451	HARGER CUBU12I	BRONZE HORIZONTAL BASE 1/2"
53	12	EACH	1457	HARGER #CCC3	CABLE CLIP
54	12	EACH	1452	HARGER #260	COPPER ADHESIVE CABLE HOLDER
55	52	FEET	1455	28 STRAND	28 CONDUCTOR ROPE LAY CONDUCTOR
56	(2)8	FEET	1455	28 STRAND	28 ROPE LAY FOR DOWN CONDUCTORS
57	2	EACH	11503	12497-01728	LOCTITE 266ML CONSTRUCTION ADHESIVE

NOT PART OF STANDARD PACKAGE

GENERAL NOTES:

1. ALL MATERIALS SHOWN ON THIS SHEET ARE GOVERNMENT FURNISHED MATERIALS.

THIS DRAWING PROVIDED FOR REFERENCE ONLY

FOR OFFICIAL USE ONLY
PUBLIC AVAILABILITY TO BE DETERMINED UNDER 5 USC 552

JAMES A MCDONALD LICENSE No 77395 7.16.25 STATE OF FLORIDA PROFESSIONAL ENGINEER

JACOBS
1100 N GLEBE RD.
SUITE 500
ARLINGTON, VA 22201

REV.	APPROVED DATE	DESCRIPTION	JCN	REDLINE DATE	APVD

DEPARTMENT OF TRANSPORTATION
FEDERAL AVIATION ADMINISTRATION
CENTRAL SERVICE AREA   FORTH WORTH, TX

MALSR
REPLACEMENT RUNWAY 18

TYPICAL 10' X 16' LEFT HAND CONFIGURATION
MALSR SHELTER DUPONT DRAWING 1 OF 3

HOUMA   HOUMA-TERREBONNE AIRPORT   LA

REVIEWED BY | SUBMITTED BY | APPROVED BY
SUBMITTER'S TITLE | APPROVER'S TITLE

DESIGNED BY R. GARCIA
DRAWN BY R. GARCIA
CHECKED BY J. MCDONALD
ISSUED BY ENGINEERING SERVICES NAVAIDS
DATE 07-16-25   JCN: 22001835
DRAWING NO. HUM-D-MALSR-ES523   REV.

HOUMA-TERRABONNE AIRPORT
HOUMA, LOUISIANA

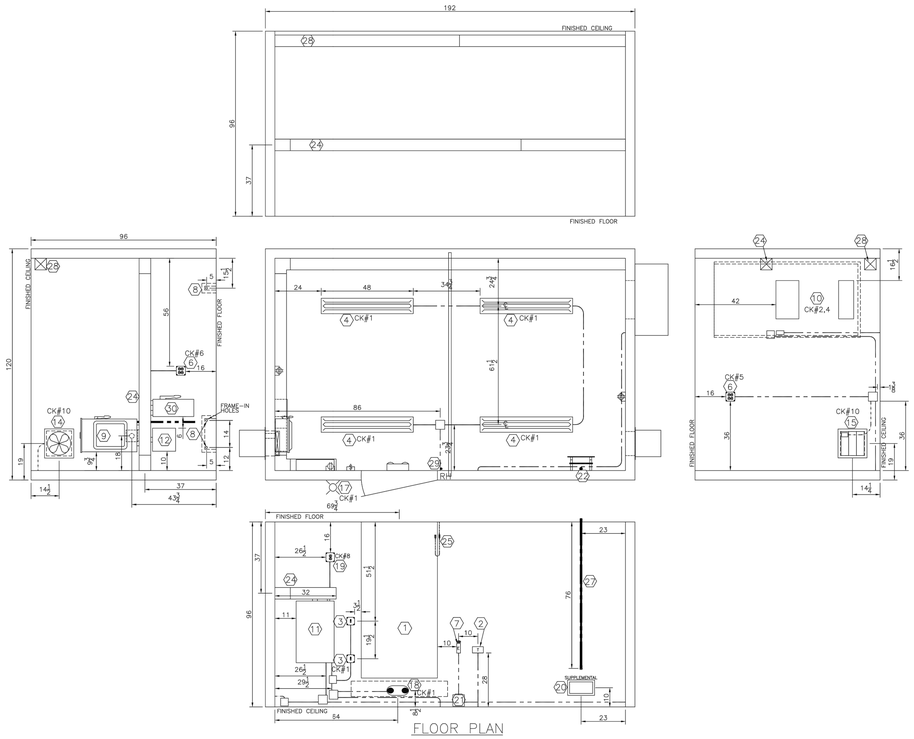

FLOOR PLAN

REV	DATE
1	02/05/25
2	02/14/25

DUPONT BUILDING, INC.
100 RITA DRIVE
LAFAYETTE, LA 70507
BELL CITY, INC.
337/905-3628
337/896-0533
www.dupontbuilding.com

CUSTOMER: FEDERAL AVIATION ADMIN
HUM-TERREBONNE AIRPORT HWY 90 MAJOR GOS

SIZE: 10' X 16' X 8'
SHEET TITLE: FLOOR PLAN

0371

SERIAL NO.
DRAWING NO. 25007
DRAWN K. SAVOIE
RELEASE DATE 01/30/2025
CHECKED BY/DATE/REV

SHEET NO. 2 OF 3
SCALE: 1/2"=1'-0"

CLIN # 003,031,051,055,077,071,047,095

THIS DRAWING PROVIDED FOR REFERENCE ONLY

FOR OFFICIAL USE ONLY
PUBLIC AVAILABILITY TO BE DETERMINED UNDER 5 USC 552

JAMES A MCDONALD LICENSE No 77395 STATE OF LOUISIANA PROFESSIONAL ENGINEER 7.16.25

JACOBS
1100 N GLEBE RD.
SUITE 500
ARLINGTON, VA 22201

REV.	APPROVED DATE	DESCRIPTION	JCN	REDLINE DATE	APVD

Jacobs

HOUMA-TERRABONNE AIRPORT
HOUMA, LOUISIANA

DEPARTMENT OF TRANSPORTATION
FEDERAL AVIATION ADMINISTRATION
CENTRAL SERVICE AREA — FORTH WORTH, TX

MALSR
REPLACEMENT RUNWAY 18

TYPICAL 10' X 16' LEFT HAND CONFIGURATION
MALSR SHELTER DUPONT DRAWING 2 OF 3

HOUMA — HOUMA-TERREBONNE AIRPORT — LA

REVIEWED BY	SUBMITTED BY	APPROVED BY
	SUBMITTER'S TITLE	APPROVER'S TITLE
	DESIGNED BY R. GARCIA	ISSUED BY: ENGINEERING SERVICES NAVAIDS
	DRAWN BY R. GARCIA	DATE 07-16-25 JCN: 22001835
	CHECKED BY J. MCDONALD	DRAWING NO. HUM-D-MALSR-ES524 REV.

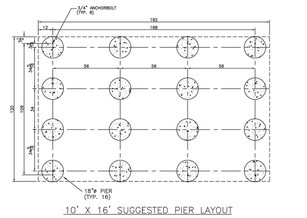

10' X 16' SUGGESTED PIER LAYOUT

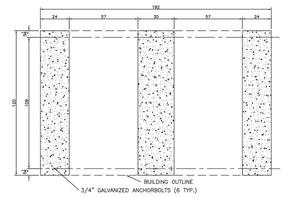

10' X 16' SUGGESTED GRADE BEAM FOUNDATION PLAN

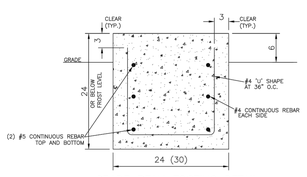

GRADE BEAM FOOTING DETAIL
SCALE: 1 1/2"=1'-0"

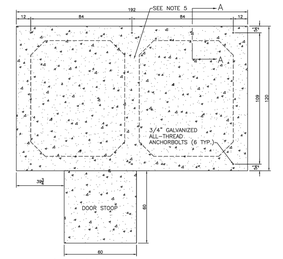

10' X 16' SUGGESTED FOUNDATION PLAN

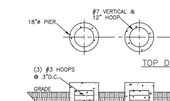

PIER DETAIL
SCALE: 1/2"=1' 0"

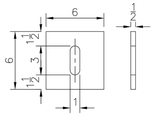

6"x6"x1/2" HOLD DOWN PLATE
SCALE: 3"=1'-0"

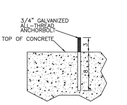

ANCHORBOLT DETAIL
SCALE: 1 1/2"=1'-0"

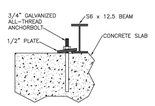

TIE-DOWN DETAIL
SCALE: 1 1/2"=1'-0"

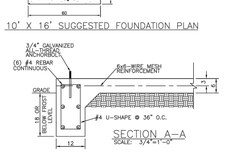

SECTION A-A
SCALE: 3/4"=1'-0"

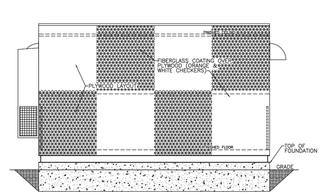

REAR ELEVATION

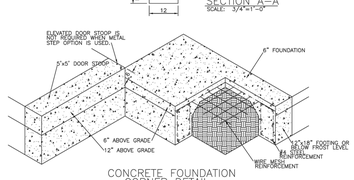

CONCRETE FOUNDATION CORNER DETAIL
SCALE: 1/2"=1'-0"

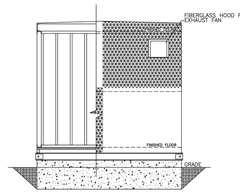

LEFT ELEVATION

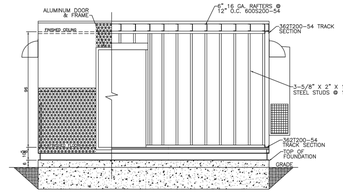

FRONT ELEVATION

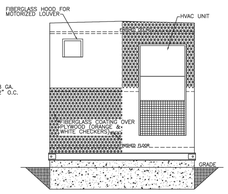

RIGHT ELEVATION

NOTES:

1. 4500 PSI CONCRETE WITH 5" SLUMP TO BE USED FOR FOUNDATION.
2. DRILL AND EPOXY ANCHOR BOLTS WITH PRO-POXIE EPOXY KIT 300 FAST SET.
3. TORQUE ANCHOR BOLT NUTS TO 45 Ft. LBS.
4. SOIL BASE SHALL BE UNDISTURBED SOIL OR COMPACTED FIRMLY.
5. CENTER FOOTING IS REQUIRED IN LOCATIONS WHERE SOIL CANNOT BE COMPACTED TO 2000 PSF, E.G. SANDY BASE.
6. FILL BENEATH SLAB SHALL BE 6" OF CRUSHED 3/4" ROCK WITH 30-40% FINES. (ROAD BASE)
7. LATERAL REBAR SHALL HAVE 90° BENT CORNERS WITH 3" OVERLAP.

DUPONT ENGINEERED MINIMAL FOOTING AND FOUNDATION DESIGN; BUILDING WARRANTY DEPENDENT UPON FOUNDATION MEETING OR EXCEEDING DESIGN REQUIREMENTS.

REV	DATE
1	02/05/25
2	02/14/25

DUPONT BUILDING, INC.

BELL CITY, LA. 70630
PH. 337/905-2588
FAX 337/905-2588
www.DupontBuilding.com

CUSTOMER: FEDERAL AVIATION ADMIN
HUM-TERREBONNE AIRPORT DMV 18 MALSR W/ATC SHL

SIZE: 10' X 16' X 8'
SHEET TITLE: FOUNDATION/EXTERIOR VIEW

0371

SERIAL NO.: –
DRAWING NO.: 25007
DRAWN: K. SAVOIE
RELEASE DATE: 01/30/2025
CHECKED BY/DATE/REV:

SHEET NO.: 3 OF 3
SCALE: 1/2"=1' 0"

CLIN # 003,031,051,055,077,071,047,095

THIS DRAWING PROVIDED FOR REFERENCE ONLY

JAMES A MCDONALD LICENSE No 77395 STATE OF Florida PROFESSIONAL ENGINEER
7.16.25

FOR OFFICIAL USE ONLY
PUBLIC AVAILABILITY TO BE DETERMINED UNDER 5 USC 552

JACOBS
1100 N GLEBE RD.
SUITE 500
ARLINGTON, VA 22201

Jacobs

HOUMA-TERRABONNE AIRPORT
HOUMA, LOUISIANA

REV.	APPROVED DATE	DESCRIPTION	JCN	REDLINE DATE	APVD

DEPARTMENT OF TRANSPORTATION
FEDERAL AVIATION ADMINISTRATION
CENTRAL SERVICE AREA — FORTH WORTH, TX

MALSR
REPLACEMENT RUNWAY 18

TYPICAL 10' X 16' LEFT HAND CONFIGURATION
MALSR SHELTER DUPONT DRAWING 3 OF 3

HOUMA — HOUMA-TERREBONNE AIRPORT — LA

REVIEWED BY	SUBMITTED BY	APPROVED BY
	SUBMITTER'S TITLE	APPROVER'S TITLE
DESIGNED BY: R. GARCIA	ISSUED BY: ENGINEERING SERVICES NAVAIDS	DATE: 07-16-25
DRAWN BY: R. GARCIA		JCN: 22001835
CHECKED BY: J. MCDONALD		DRAWING NO.: HUM-D-MALSR-ES525
		REV.

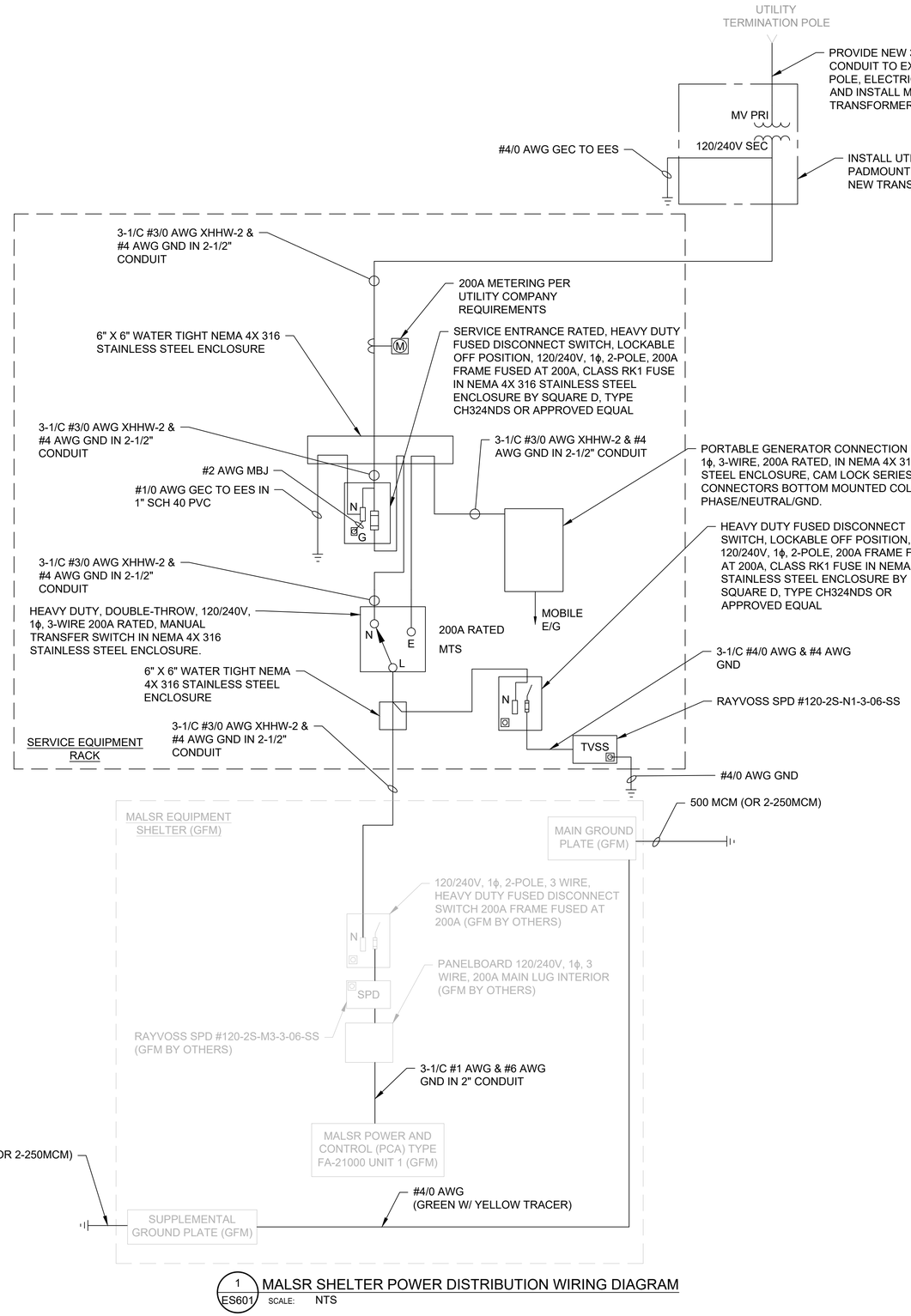

1 ES601 MALSR SHELTER POWER DISTRIBUTION WIRING DIAGRAM
SCALE: NTS

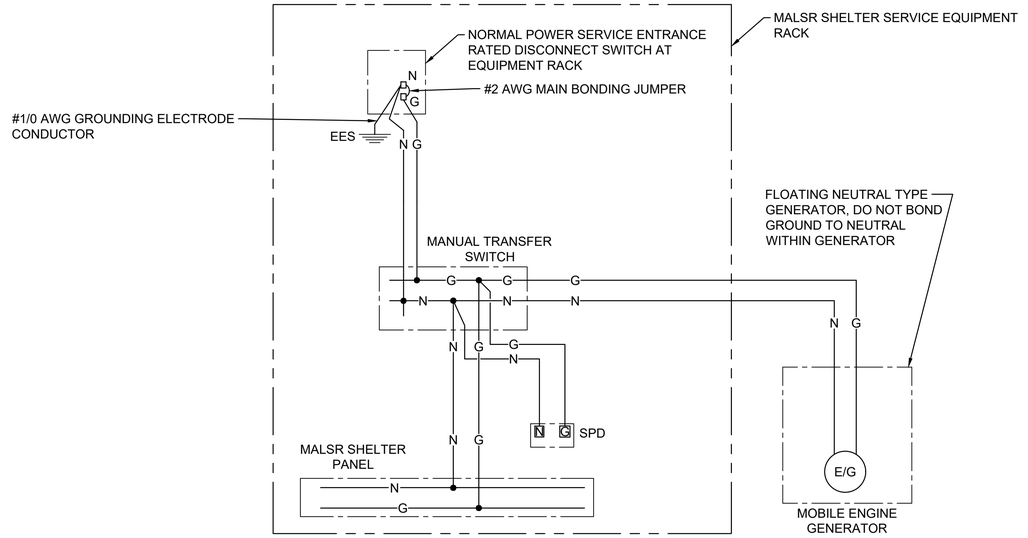

2 ES601 GROUNDING AND NEUTRAL CONNECTIONS BLOCK DIAGRAM - NON-SEPARATELY DERIVED SYSTEM
SCALE: NTS

NOTES:

1. ALL WIRING SHALL MEET LATEST EDITION OF THE NATIONAL ELECTRIC CODE (NEC), AND FAA STD-019 LATEST VERSION, LIGHTNING AND SURGE PROTECTION, GROUNDING, BONDING AND SHIELDING REQUIREMENTS FOR FACILITIES AND ELECTRONIC EQUIPMENT.
2. UNDERGROUND POWER CONDUCTORS SHALL BE 600V RATED XHHW-2 OR APPROVED EQUAL UNLESS OTHERWISE INDICATED. ABOVEGROUND POWER CONDUCTORS SHALL BE 600V RATED THWN-2, XHHW-2, OR APPROVED EQUAL UNLESS OTHERWISE INDICATED.
3. CONDUIT ENTERING SPD SHALL BE SEALED WITH DUCT SEAL.
4. PROVIDE SPARE FUSES FOR ALL FUSED DISCONNECT SWITCHES. STORE WITHIN FUSED DISCONNECT.
5. CONSTRUCT ELECTRIC UTILITY INFRASTRUCTURE IN ACCORDANCE WITH TPCG STANDARDS AND SPECIFICATIONS OR AS NOTED ON THIS DRAWING. COORDINATE INSTALLATION OF ALL ELECTRIC UTILITY INFRASTRUCTURE WITH TPCG. PERFORM SITE INSPECTIONS AS REQUIRED PRIOR TO BACKFILLING CONDUIT TRENCHES AND PRIOR TO INSTALLING UTILITY TRANSFORMER ON TRANSFORMER PAD.
6. TEST ALL 600V RATED CABLES IN ACCORDANCE WITH FAA STANDARDS. INSULATION RESISTANCE FOR ALL NEW 600V RATED CABLES SHALL BE 50MΩ MINIMUM. ANY CABLES THAT HAVE FAILED TESTING SHALL BE REMOVED AND REPLACED IN THEIR ENTIRETY ALONG WITH ALL OTHER CABLES OCCUPYING THE SAME CONDUIT/RACEWAY AT THE CONTRACTOR'S OWN EXPENSE.

FOR OFFICIAL USE ONLY
PUBLIC AVAILABILITY TO BE DETERMINED UNDER 5 USC 552

JACOBS
1100 N GLEBE RD.
SUITE 500
ARLINGTON, VA 22201

REV.	APPROVED DATE	DESCRIPTION	JCN	REDLINE DATE	APVD

DEPARTMENT OF TRANSPORTATION
FEDERAL AVIATION ADMINISTRATION
CENTRAL SERVICE AREA — FORTH WORTH, TX

Jacobs

MALSR
REPLACEMENT RUNWAY 18

MALSR SHELTER POWER DISTRIBUTION WIRING DIAGRAM

HOUMA — HOUMA-TERREBONNE AIRPORT — LA

JAMES A. MCDONALD LICENSE No 77395 STATE OF LOUISIANA PROFESSIONAL ENGINEER 7.16.25

HOUMA-TERRABONNE AIRPORT
HOUMA, LOUISIANA

REVIEWED BY	SUBMITTED BY	APPROVED BY
	SUBMITTER'S TITLE	APPROVER'S TITLE
	DESIGNED BY R. GARCIA	ISSUED BY: ENGINEERING SERVICES NAVAIDS
	DRAWN BY R. GARCIA	DATE 07-16-25
	CHECKED BY J. MCDONALD	JCN: 22001835
		DRAWING NO. HUM-D-MALSR-ES601
		REV.

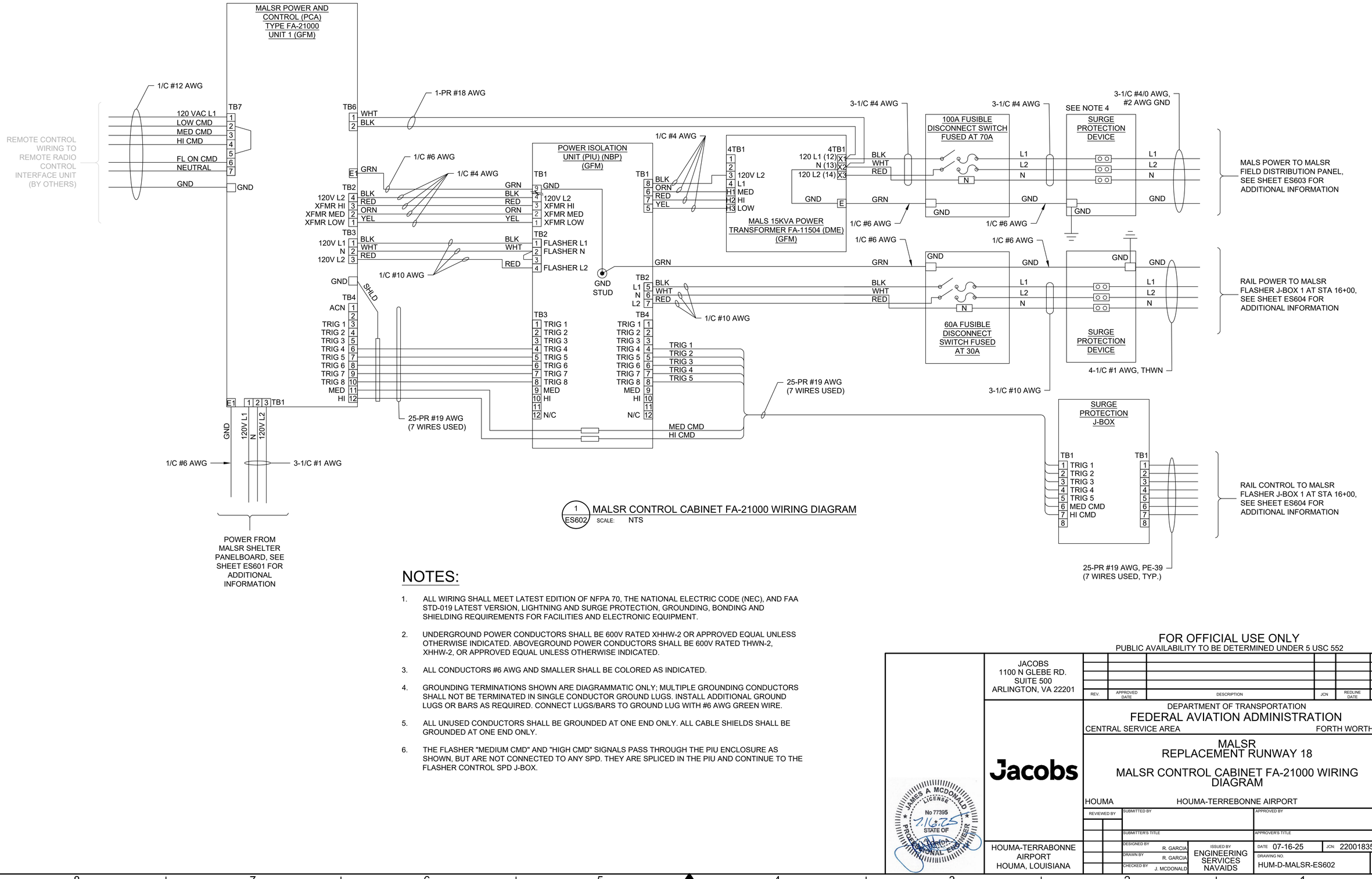

1 ES602 MALSR CONTROL CABINET FA-21000 WIRING DIAGRAM
SCALE: NTS

NOTES:

1. ALL WIRING SHALL MEET LATEST EDITION OF NFPA 70, THE NATIONAL ELECTRIC CODE (NEC), AND FAA STD-019 LATEST VERSION, LIGHTNING AND SURGE PROTECTION, GROUNDING, BONDING AND SHIELDING REQUIREMENTS FOR FACILITIES AND ELECTRONIC EQUIPMENT.
2. UNDERGROUND POWER CONDUCTORS SHALL BE 600V RATED XHHW-2 OR APPROVED EQUAL UNLESS OTHERWISE INDICATED. ABOVEGROUND POWER CONDUCTORS SHALL BE 600V RATED THWN-2, XHHW-2, OR APPROVED EQUAL UNLESS OTHERWISE INDICATED.
3. ALL CONDUCTORS #6 AWG AND SMALLER SHALL BE COLORED AS INDICATED.
4. GROUNDING TERMINATIONS SHOWN ARE DIAGRAMMATIC ONLY; MULTIPLE GROUNDING CONDUCTORS SHALL NOT BE TERMINATED IN SINGLE CONDUCTOR GROUND LUGS. INSTALL ADDITIONAL GROUND LUGS OR BARS AS REQUIRED. CONNECT LUGS/BARS TO GROUND LUG WITH #6 AWG GREEN WIRE.
5. ALL UNUSED CONDUCTORS SHALL BE GROUNDED AT ONE END ONLY. ALL CABLE SHIELDS SHALL BE GROUNDED AT ONE END ONLY.
6. THE FLASHER "MEDIUM CMD" AND "HIGH CMD" SIGNALS PASS THROUGH THE PIU ENCLOSURE AS SHOWN, BUT ARE NOT CONNECTED TO ANY SPD. THEY ARE SPLICED IN THE PIU AND CONTINUE TO THE FLASHER CONTROL SPD J-BOX.

FOR OFFICIAL USE ONLY
PUBLIC AVAILABILITY TO BE DETERMINED UNDER 5 USC 552

JACOBS
1100 N GLEBE RD.
SUITE 500
ARLINGTON, VA 22201

REV.	APPROVED DATE	DESCRIPTION	JCN	REDLINE DATE	APVD

DEPARTMENT OF TRANSPORTATION
FEDERAL AVIATION ADMINISTRATION
CENTRAL SERVICE AREA — FORTH WORTH, TX

MALSR
REPLACEMENT RUNWAY 18

MALSR CONTROL CABINET FA-21000 WIRING DIAGRAM

HOUMA — HOUMA-TERREBONNE AIRPORT — LA

HOUMA-TERRABONNE AIRPORT
HOUMA, LOUISIANA

JAMES A MCDONALD — LICENSE — No 77395 — STATE OF Louisiana — PROFESSIONAL ENGINEER

REVIEWED BY	SUBMITTED BY	APPROVED BY	
	SUBMITTER'S TITLE	APPROVER'S TITLE	
	DESIGNED BY R. GARCIA	ISSUED BY: ENGINEERING SERVICES NAVAIDS	DATE 07-16-25 JCN: 22001835
	DRAWN BY R. GARCIA		DRAWING NO. HUM-D-MALSR-ES602 REV.
	CHECKED BY J. MCDONALD		

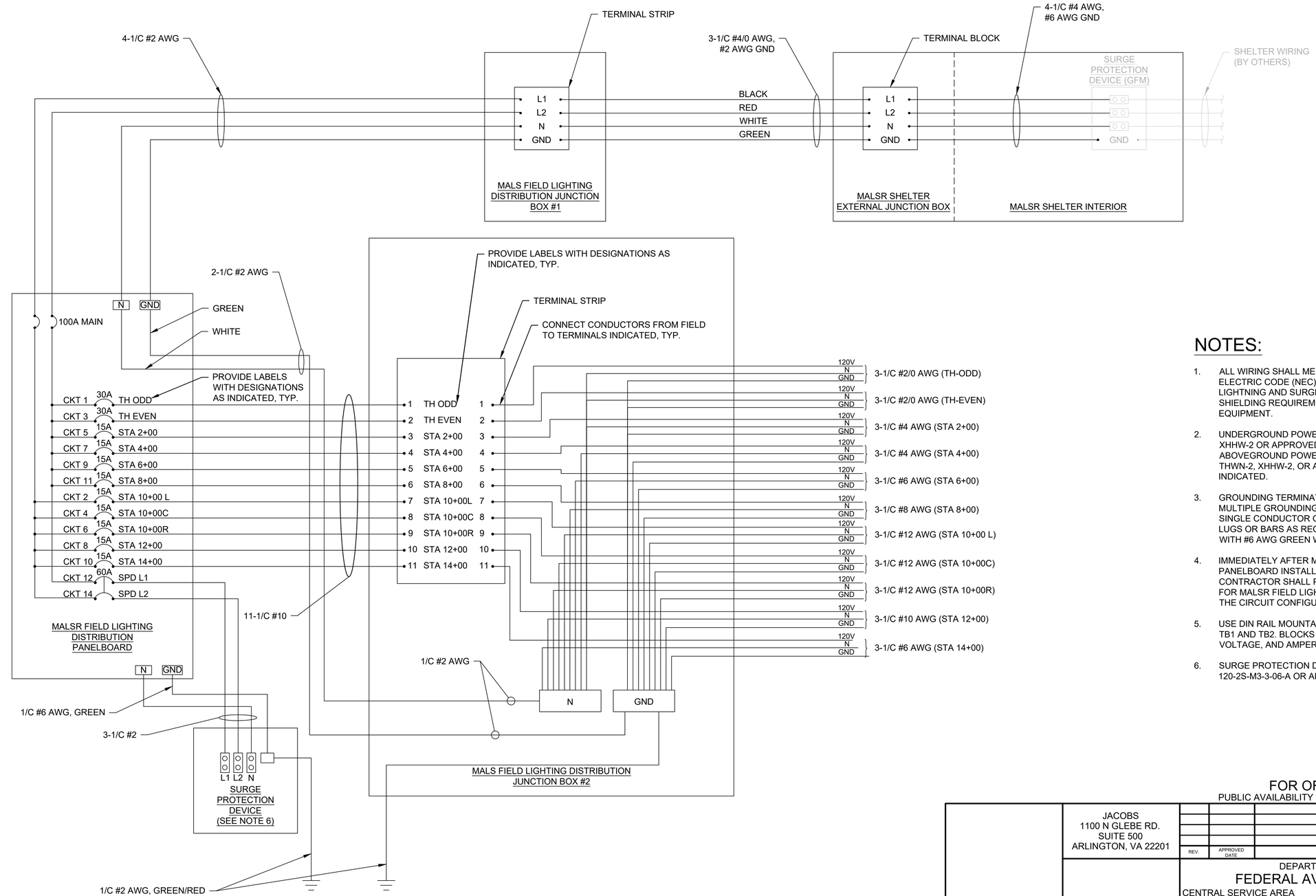

1 ES603 MALS FIELD DISTRIBUTION WIRING DIAGRAM

SCALE: NTS

NOTES:

1. ALL WIRING SHALL MEET LATEST EDITION OF NFPA 70, THE NATIONAL ELECTRIC CODE (NEC), AND FAA STD-019 LATEST VERSION, LIGHTNING AND SURGE PROTECTION, GROUNDING, BONDING AND SHIELDING REQUIREMENTS FOR FACILITIES AND ELECTRONIC EQUIPMENT.
2. UNDERGROUND POWER CONDUCTORS SHALL BE 600V RATED XHHW-2 OR APPROVED EQUAL UNLESS OTHERWISE INDICATED. ABOVEGROUND POWER CONDUCTORS SHALL BE 600V RATED THWN-2, XHHW-2, OR APPROVED EQUAL UNLESS OTHERWISE INDICATED.
3. GROUNDING TERMINATIONS SHOWN ARE DIAGRAMMATIC ONLY; MULTIPLE GROUNDING CONDUCTORS SHALL NOT BE TERMINATED IN SINGLE CONDUCTOR GROUND LUGS. INSTALL ADDITIONAL GROUND LUGS OR BARS AS REQUIRED. CONNECT LUGS/BARS TO GROUND LUG WITH #6 AWG GREEN WIRE.
4. IMMEDIATELY AFTER MALSR FIELD LIGHTING DISTRIBUTION PANELBOARD INSTALLATION HAS BEEN COMPLETED THE CONTRACTOR SHALL PROVIDE A NEW LAMINATED PANEL SCHEDULE FOR MALSR FIELD LIGHTING DISTRIBUTION PANELBOARD SHOWING THE CIRCUIT CONFIGURATION.
5. USE DIN RAIL MOUNTABLE POWER DISTRIBUTION BLOCKS TO BUILD TB1 AND TB2. BLOCKS SHALL BE RATED FOR THE WIRE SIZE, VOLTAGE, AND AMPERAGE SIZES INDICATED.
6. SURGE PROTECTION DEVICE (SPD) SHALL BE RAYVOSS 120-2S-M3-3-06-A OR APPROVED EQUAL.

FOR OFFICIAL USE ONLY
PUBLIC AVAILABILITY TO BE DETERMINED UNDER 5 USC 552

JACOBS
1100 N GLEBE RD.
SUITE 500
ARLINGTON, VA 22201

REV.	APPROVED DATE	DESCRIPTION	JCN	REDLINE DATE	APVD

DEPARTMENT OF TRANSPORTATION
FEDERAL AVIATION ADMINISTRATION
CENTRAL SERVICE AREA — FORTH WORTH, TX

MALSR
REPLACEMENT RUNWAY 18

MALS FIELD DISTRIBUTION RACK WIRING DIAGRAM

HOUMA — HOUMA-TERREBONNE AIRPORT — LA

JAMES A MCDONALD LICENSE No 77395 STATE OF Louisiana PROFESSIONAL ENGINEER 7.16.25

HOUMA-TERRABONNE AIRPORT
HOUMA, LOUISIANA

REVIEWED BY	SUBMITTED BY		APPROVED BY
	SUBMITTER'S TITLE		APPROVER'S TITLE
	DESIGNED BY R. GARCIA	ISSUED BY ENGINEERING SERVICES NAVAIDS	DATE 07-16-25 JCN: 22001835
	DRAWN BY R. GARCIA		DRAWING NO. HUM-D-MALSR-ES603 REV.
	CHECKED BY J. MCDONALD		

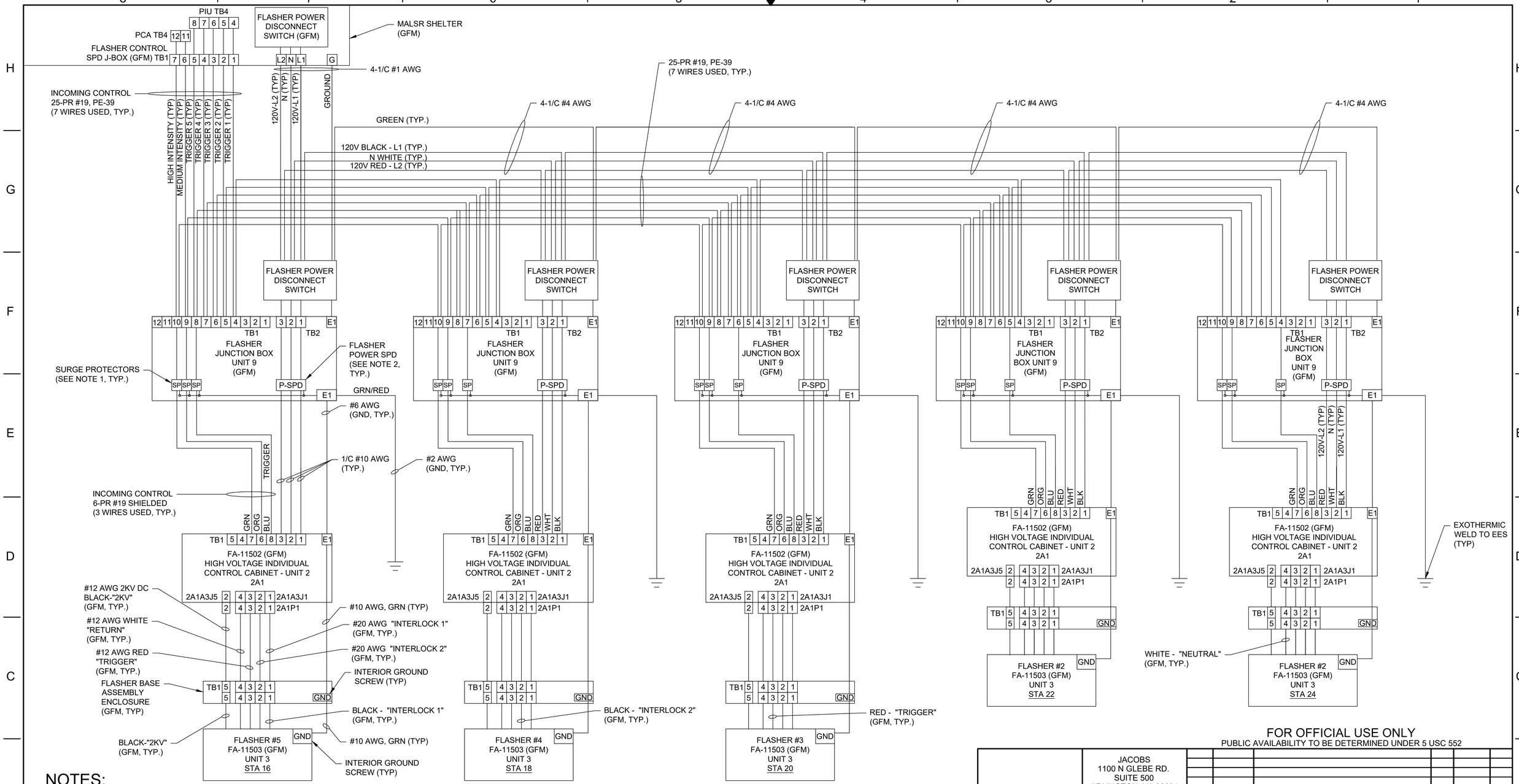

NOTES:

1. COMMUNICATION SURGE PROTECTORS ARE ULTRALINX UB3B-235 OR APPROVED EQUAL. INSTALLED PER MANUFACTURER'S INSTRUCTIONS, MOUNTED ON A SIEMENS 66 BLOCK, AWG #19 WIRES HAVE THEIR INSULATION TRIMMED BACK FOR PUNCHDOWN TO ENSURE GOOD CONNECTIVITY. USE ITWLINX MGBSGL-1 GROUND BAR KIT OR APPROVED EQUAL TO GROUND THE SURGE PROTECTORS.
2. FLASHER POWER SURGE PROTECTORS ARE GFM. DRILL HOLE AND MOUNT PER MANUFACTURER'S INSTRUCTIONS. MOUNT ONE ILSCO PDL-14-2/0-3 POWER DISTRIBUTION BLOCK PER FLASHER J-BOX TO CONNECT INCOMING POWER, OUTGOING POWER, AND THE SPD. INSTALL MANUFACTURER'S COVER OVER PDB.
3. WIRING BETWEEN "INDIVIDUAL CONTROL CABINETS", "TB1", AND "FLASHERS" IS TYPICAL FOR ALL FIVE FLASHER STATIONS.
4. TRIGGERS 1 THROUGH 5 ON THIS DRAWING CORRESPOND TO TRIGGERS 4 THROUGH 8 IN THE MANUFACTURER'S TECHNICAL INSTRUCTION BOOK. THEY HAVE BEEN RELABELED FOR CLARITY.
5. ALL UNDERGROUND POWER WIRING SHALL BE RATED XHHW-2 OR APPROVED EQUAL UNLESS OTHERWISE INDICATED. ALL ABOVEGROUND POWER WIRING SHALL BE RATED THWN-2, XHHW-2, OR APPROVED EQUAL UNLESS OTHERWISE INDICATED.

1 / ES604 RAIL EQUIPMENT WIRING DIAGRAM
SCALE: NTS

FOR OFFICIAL USE ONLY
PUBLIC AVAILABILITY TO BE DETERMINED UNDER 5 USC 552

JACOBS
1100 N GLEBE RD.
SUITE 500
ARLINGTON, VA 22201

REV.	APPROVED DATE	DESCRIPTION	JCN	REDLINE DATE	APVD

DEPARTMENT OF TRANSPORTATION
FEDERAL AVIATION ADMINISTRATION
CENTRAL SERVICE AREA — FORTH WORTH, TX

MALSR
REPLACEMENT RUNWAY 18

RAIL HIGH VOLTAGE ICC WIRING DIAGRAM

HOUMA — HOUMA-TERREBONNE AIRPORT — LA

HOUMA-TERRABONNE AIRPORT
HOUMA, LOUISIANA

JAMES A MCDONALD LICENSE No 77395 STATE OF Florida PROFESSIONAL ENGINEER

REVIEWED BY	SUBMITTED BY	APPROVED BY	
	SUBMITTER'S TITLE	APPROVER'S TITLE	
	DESIGNED BY R. GARCIA	ISSUED BY: ENGINEERING SERVICES NAVAIDS	DATE 07-16-25 JCN: 22001835
	DRAWN BY R. GARCIA		DRAWING NO. HUM-D-MALSR-ES604 REV.
	CHECKED BY J. MCDONALD		

GENERAL NOTES

DESIGN CRITERIA:

1. THE FOLLOWING CODES AND STANDARDS APPLY TO THE DESIGN OF THIS PROJECT:

   A. IBC 2021, INTERNATIONAL BUILDING CODE
   B. ASCE/SEI 7-22, MINIMUM DESIGN LOADS AND ASSOCIATED CRITERIA FOR BUILDINGS AND OTHER STRUCTURES
   C. ACI 318-19, BUILDING CODE REQUIREMENTS FOR STRUCTURAL CONCRETE AND COMMENTARY
   D. ASCE/SEI 72-21, DESIGN OF STEEL LIGHTING SYSTEM SUPPORT POLE STRUCTURES

CONSTRUCTION REQUIREMENTS:

1. FIELD VERIFY EXISTING CONDITIONS AND DIMENSIONS BEFORE STARTING CONSTRUCTION AND SUBMITTING SHOP DRAWINGS. REPORT DISCREPANCIES TO THE COR.
2. DO NOT SCALE DRAWINGS FOR THE PURPOSE OF ESTABLISHING DIMENSIONS.
3. CUT NO HOLES IN STRUCTURAL MEMBERS WITHOUT WRITTEN APPROVAL FROM THE COR.
4. PROTECT EXISTING AND NEW UTILITIES, STRUCTURAL MEMBERS, FINISHES, ETC. ASSUME FULL RESPONSIBILITY FOR DAMAGE DURING CONSTRUCTION. RESTORE DAMAGED AREAS TO THE SATISFACTION OF THE COR, AT NO COST TO THE GOVERNMENT.
5. DETAILS LABELED "TYPICAL" OR SHOWN ON S500 SERIES SHEETS APPLY TO SITUATIONS OCCURRING ON THE PROJECT THAT ARE THE SAME OR SIMILAR TO THOSE SPECIFICALLY DETAILED. SUCH DETAILS APPLY WHETHER OR NOT DETAILS ARE REFERENCED AT EACH LOCATION. NOTIFY COR OF CONFLICTS REGARDING APPLICABILITY OF TYPICAL DETAILS.
6. DO NOT LOAD THE SLAB-ON-GROUND WITH ERECTION CRANES OR ERECTION EQUIPMENT. THE SLABS HAVE NOT BEEN DESIGNED FOR CRANE LOADS AND MAY REQUIRE AN INCREASE IN THICKNESS AND/OR REINFORCEMENT IF DESIGN FOR SAID LOADS IS REQUIRED.
7. DO NOT STORE OR STACK CONSTRUCTION MATERIALS ON POURED OR ERECTED FLOORS IN EXCESS OF 80 PERCENT OF LIVE LOAD. ENSURE SUB-CONTRACTORS ARE INFORMED OF LOADING RESTRICTIONS. AVOID IMPACT WHEN PLACING MATERIALS ON POURED OR ERECTED FLOORS OR ROOF.
8. THE CONTRACT STRUCTURAL DOCUMENTS REPRESENT THE FINISHED STRUCTURE. THE CONTRACTOR IS RESPONSIBLE FOR THE MEANS AND METHODS OF CONSTRUCTION. PROVIDE MEASURES REQUIRED TO PROTECT THE STRUCTURE, WORKMEN, AND OTHER PERSONS DURING CONSTRUCTION; INCLUDING BRACING, SHORING FOR CONSTRUCTION EQUIPMENT, SHORING FOR THE BUILDING, FORMS AND SCAFFOLDING, SHORING OF RETAINING WALLS AND OTHER TEMPORARY SUPPORTS AS REQUIRED.
9. STORE, HANDLE, PREPARE AND INSTALL MATERIALS IN ACCORDANCE WITH MANUFACTURER'S/VENDOR'S PRINTED RECOMMENDATIONS UNLESS OTHERWISE NOTED.

GENERAL:

STRUCTURAL DESIGN IS IN ACCORDANCE WITH THE INTERNATIONAL BUILDING CODE 2021 EDITION WITH THE FOLLOWING MINIMUM LOADS.

1.	BUILDING RISK CATEGORY	I
2.	LIVE LOADS	
	A. SHELTER ROOF:	20 PSF
	B. SHELTER FLOOR:	125 PSF
	C. EQUIPMENT RACK SLAB FLOOR:	125 PSF
3.	SNOW	
	A. GROUND SNOW LOAD:	10 PSF
	B. FLAT-ROOF SNOW LOAD:	10 PSF
4.	RAIN	
	A. RAINFALL INTENSITY (60-MIN):	7.42 IN/HR
5.	WIND	
	A. BASIC WIND SPEED V:	135 MPH
	B. WIND EXPOSURE:	C
	C. SHELTER INTERNAL PRESSURE COEFFICIENT GC_{pi}:	+/- 0.18
	D. SHELTER ENCLOSURE CLASSIFICATION:	ENCLOSED
6.	ICE	
	A. ICE THICKNESS	0.33 IN
7.	EARTHQUAKE	
	A. SEISMIC IMPORTANCE FACTOR I_e:	1.0
	B. MAPPED RESPONSE ACCELERATION PARAMETERS	
	a. S_S:	0.11g
	b. S_1:	0.055g
	C. SITE CLASS:	E
	D. DESIGN RESPONSE ACCELERATION PARAMETERS	
	a. S_{DS}:	0.093g
	b. S_{D1}:	0.079g
	E. SEISMIC DESIGN CATEGORY:	B
	F. SEISMIC BASE SHEAR (SHELTER):	1.2 KIP
	G. SEISMIC RESPONSE COEFFICIENT, C_S:	C_S = 0.07
	H. ANALYSIS PROCEDURE USED:	EQUIVALENT LATERAL FORCE
8.	FLOOD	
	A. FLOOD ZONE:	AE
	B. STATIC BASE FLOOD ELEVATION	11 FT

GEOTECHNICAL & FOUNDATIONS:

1. NET ALLOWABLE SOIL BEARING PRESSURE IS 1000 PSF FOR SUSTAINED LOADS AND 2000 PSF FOR TRANSIENT LOADS.
2. FOUNDATION DESIGN IS BASED ON THE SOILS EXPLORATION REPORT BY FUGRO, LLC, TITLED "RUNWAY 18 APPROACH LIGHTING PROJECT REPORT, GEOTECHNICAL INVESTIGATION, HOUMA, LOUISIANA" DATED JUNE 14, 2024, PROJECT NUMBER 251305.
3. COMPACT FOUNDATION NATURAL SUBGRADE OR BACKFILL TO AT LEAST 95 PERCENT OF THE MODIFIED PROCTOR DENSITY (ASTM D1557). FOUNDATIONS MUST NOT BE PLACED AGAINST SUBGRADE CONTAINING FREE WATER OR ICE. REFER TO THE GEOTECHNICAL REPORT AND SPECIFICATIONS FOR GENERAL INFORMATION AND RECOMMENDATIONS REGARDING EARTHWORK, OVER EXCAVATION, SUBGRADE PREPARATION, FILL AND COMPACTION, WATERPROOFING, REQUIRED MOISTURE CONTENT AND OTHER PERTINENT REQUIREMENTS AND INFORMATION. MAINTAIN SUBGRADE AND FILL MOISTURE CONTENT UNTIL FOUNDATIONS ARE PLACED.
4. ARRANGE FOR CONTRACTOR'S INDEPENDENT TESTING AGENCY TO MONITOR CUT AND FILL OPERATIONS AND SUBMIT REPORT DAILY. CONTRACTOR'S INDEPENDENT TESTING AGENCY MUST PERFORM FIELD DENSITY AND MOISTURE CONTENT TESTS (ASTM D1557 AND ASTM D698) TO VERIFY COMPACTION AND APPROVE FOOTING SUBGRADE PRIOR TO PLACING CONCRETE. CONTRACTOR'S INDEPENDENT TESTING AGENCY MUST SUBMIT A PROPOSED TESTING PLAN TO COR FOR APPROVAL.
5. MAINTAIN PROPER SITE DRAINAGE DURING CONSTRUCTION TO DIRECT SURFACE RUNOFF AWAY FROM STRUCTURES AND TO PREVENT PONDING OF SURFACE RUNOFF NEAR THE STRUCTURES. SUBMIT A PROPOSED SITE DRAINAGE PLAN TO COR FOR APPROVAL.
6. REFER TO CIVIL DRAWINGS FOR LIMITS OF EXCAVATIONS.

CONCRETE:

1. CONCRETE DESIGN CONFORMS TO ACI 318-19 BUILDING CODE REQUIREMENTS FOR STRUCTURAL CONCRETE
2. MINIMUM 28-DAY COMPRESSIVE STRENGTH: 4500PSI UNLESS NOTED OTHERWISE
3. PROVIDE BATCH MIXING, TRANSPORTATION, PLACING AND CURING OF CONCRETE IN ACCORDANCE WITH ACI 301, ACI 318 AND ASTM C94.
4. CHAMFER EXPOSED EDGES 3/4 INCH UNLESS OTHERWISE NOTED.
5. REFER TO OTHER DISCIPLINE'S DRAWINGS FOR LOCATION AND SIZE OF SUB-SLAB PIPING AND SLAB PENETRATIONS.
6. FOR PIPE INSTALLED HORIZONTALLY WITHIN SLAB, LIMIT OUTSIDE DIAMETER TO 30 PERCENT OF THE SLAB THICKNESS. PLACE CONDUIT OR PIPE BETWEEN THE TOP AND BOTTOM LAYERS OF REINFORCEMENT WITHIN THE CENTER THIRD OF THE SLAB. DO NOT SPACE CONDUITS OR PIPES CLOSER THAN THREE DIAMETERS OR WIDTHS ON CENTER.
7. ALUMINUM CONDUIT/PIPE IS NOT PERMITTED IN CONCRETE. ALUMINUM CHUTES/ACCESSORIES ARE NOT PERMITTED.
8. DO NOT PLACE FOOTINGS OR SLABS AGAINST SUBGRADE CONTAINING FREE WATER, FROST, OR ICE.
9. PLACE CONCRETE USING A HOPPER AND CHUTE PIPE. LIMIT CONCRETE FREE FALL TO LESS THAN 5 FEET.
10. FORM SIDES OF THICKENED SLAB EDGES STRAIGHT AND TO SPECIFIED DIMENSIONS. DO NOT USE EARTH FORMS.
11. PROVIDE VAPOR BARRIERS WITH A MINIMUM THICKNESS OF 15 MILS BELOW FOUNDATION STRUCTURAL SLABS, AND SLABS-ON-GROUND.
12. CONCRETE EXPOSURE CLASS: F2, S0, W1, C1.
13. MAXIMUM WATER-CEMENT RATIO: 0.45
14. MAXIMUM WATER-SOLUBLE CHLORIDE ION CONTENT: 0.3 %
15. CONCRETE ENTRAINED AIR CONTENT: 5.5%

REINFORCING STEEL:

1. PROVIDE DETAILING, FABRICATION, AND INSTALLATION OF REINFORCING AND ACCESSORIES IN ACCORDANCE WITH ACI 315 AND ACI 318.
2. PROVIDE NEW BILLET STEEL REINFORCING BARS IN ACCORDANCE WITH ASTM A615, GRADE 60, DEFORMED.
3. COORDINATE PLACEMENT OF CAST-IN-PLACE EMBEDS AND ANCHOR RODS. SET ANCHOR RODS WITH A TEMPLATE. SECURELY ATTACH EMBED ITEMS TO FORMWORK OR REINFORCING. DO NOT WET SET CAST-IN-PLACE EMBEDS AND ANCHOR RODS.
4. PROVIDE CLASS "B" REINFORCEMENT SPLICES FOR CONTINUOUS REINFORCEMENT. PROVIDE STANDARD 90-DEGREE HOOKS IN ACCORDANCE WITH ACI 318. STAGGER SPLICES UNLESS SPECIFICALLY NOTED OTHERWISE.
5. MAINTAIN CONCRETE COVERAGE FOR REINFORCING STEEL IN ACCORDANCE WITH ACI 318-19 UNLESS OTHERWISE NOTED.
6. DO NOT WELD OR BEND REINFORCEMENT IN THE FIELD UNLESS SPECIFICALLY SHOWN OR APPROVED IN WRITING BY STRUCTURAL ENGINEER OF RECORD.
7. PROVIDE MINIMUM 3 INCHES OF REINFORCING COVER FOR CONCRETE SURFACES EXPOSED TO EARTH. PROVIDE MINIMUM 2 INCHES OF REINFORCING COVER FOR OTHER CONCRETE, UNLESS OTHERWISE NOTED.

PRE-ENGINEERED MALSR SHELTER:

1. THE FOLLOWING NOTES APPLY TO THE MALSR PRE-ENGINEERED SHELTER THAT WILL BE PROVIDED BY FAA.
2. VERIFY DIMENSIONS AND SITE CONDITIONS PRIOR TO DESIGN, FABRICATION OR ERECTION OF THE PRE-ENGINEERED STRUCTURES OR FOUNDATIONS.
3. STRUCTURAL ENGINEER OF RECORD IS NOT RESPONSIBLE FOR THE DESIGN OF PRE-ENGINEERED STRUCTURES. PRE-ENGINEERED SHELTER MUST BE DESIGNED AND SEALED BY A REGISTERED ENGINEER IN THE STATE OF LOUISIANA.
4. STRUCTURAL CALCULATIONS AND SHOP DRAWINGS, INCLUDING BUT NOT LIMITED TO, DESIGN LOADS, CRITERIA, ASSUMPTIONS, INTENT, MEMBER CODE CHECK, BY THE PRE-ENGINEERED STRUCTURE MANUFACTURER MUST BE SUBMITTED TO STRUCTURAL ENGINEER OF RECORD FOR APPROVAL PRIOR TO FABRICATION OF BUILDING.
5. THE PRE-ENGINEERED STRUCTURES AND COMPONENTS MUST BE DESIGNED TO CARRY THEIR OWN WEIGHT PLUS SUPERIMPOSED DEAD AND LIVE LOADS INCLUDING LATERAL LOADS (WIND LOADS AND SEISMIC LOADS) FROM ALL DIRECTIONS. MECHANICAL, ELECTRICAL, AND ARCHITECTURAL LOADS MUST BE INCLUDED.
6. THE ANCHOR BOLTS FOR THE CONNECTION OF THE PRE-ENGINEERED STRUCTURES TO THE FOUNDATIONS MUST BE DESIGNED BY THE PRE-ENGINEERED STRUCTURE MANUFACTURER, INCLUDING THE REQUIRED EMBEDMENT DEPTH INTO THE FOUNDATION BASED UPON DETAILS AND FRAMING REACTIONS. ANCHOR ROD DIAMETERS, TYPE OF ADHESIVE, MINIMUM EDGE DISTANCE AND PATTERNS SHOWN IN DRAWINGS MUST BE VERIFIED BY STRUCTURAL ENGINEER OF RECORD PRIOR TO PLACEMENT OF CONCRETE.
7. THE FOUNDATIONS HAVE BEEN DESIGNED USING ESTIMATED REACTIONS FOR BID PURPOSE ONLY. THE CONTRACTOR MUST SUBMIT PRE-ENGINEERED STRUCTURE SHOP DRAWINGS AND STRUCTURAL CALCULATIONS FOR STRUCTURAL ENGINEER OF RECORD'S APPROVAL TO VALIDATE FOUNDATION DESIGN PRIOR TO CONSTRUCTION. FOUNDATION DESIGN REACTIONS MUST BE PROVIDED BY THE MANUFACTURERS TO THE COR FOR VERIFICATION OF FOUNDATION DESIGN.
8. ANY ADDITIONAL COST OF FOUNDATION WORK REQUIRED BY THE FINAL FOUNDATION DESIGN AFTER PRE-ENGINEERED BUILDING REACTIONS AND DETAILS ARE SUBMITTED MUST BE INCLUDED IN CONTRACTOR'S BID PROPOSAL.
9. ROOF MEMBERS LIVE LOAD DEFLECTION MUST BE LIMITED TO L/240. ROOF MEMBERS TOTAL LOAD DEFLECTION MUST BE LIMITED TO L/120.
10. MALSR SHELTER PROPERTIES:
    A. ASSUMED DIMENSIONS OF SHELTER = 16'-0" LONG X 10'-0" WIDE
    B. ASSUMED WEIGHT OF SHELTER AND SKID = 17 KIPS
    C. NOTIFY COR IF ACTUAL DIMENSIONS OR WEIGHT DIFFER

SHEET PILE RETAINING WALLS:

1. WHERE ACCESS ROAD IS DISRUPTED BY THE BAYOU TERREBONNE, PROVIDE SHEET PILE RETAINING WALL AT EACH SIDE. REFER TO CG102 FOR RETAINING WALL LOCATIONS AND LENGTHS. REFER TO ELEVATIONS SHOWN ON CG102 FOR REQUIRED RETAINING WALL HEIGHTS.
2. THE CONTRACTOR MUST VERIFY DIMENSIONS AND SITE CONDITIONS PRIOR TO DESIGN OR CONSTRUCTION OR RETAINING WALL.
3. S-EOR IS NOT RESPONSIBLE FOR THE DESIGN OF RETAINING WALLS. RETAINING WALLS MUST BE DESIGNED AND SEALED BY A REGISTERED ENGINEER.
4. STRUCTURAL CALCULATIONS AND SHOP DRAWINGS, INCLUDING BUT NOT LIMITED TO, DESIGN LOADS, CRITERIA, ASSUMPTIONS, INTENT, MEMBER CODE CHECK, BY THE RETAINING WALL DESIGNER MUST BE SUBMITTED TO S-EOR FOR APPROVAL PRIOR TO CONSTRUCTION OF RETAINING WALL.
5. THE RETAINING WALL MUST BE DESIGNED TO RESIST SOIL LOADS, FLOODING LOADS AND LATERAL LOADS (WIND LOADS AND SEISMIC LOADS).
6. FOR SOIL CRITERIA, REFER TO GEOTECHNICAL REPORT BY FUGRO, LLC, TITLED "RUNWAY 18 APPROACH LIGHTING PROJECT REPORT, GEOTECHNICAL INVESTIFATION, HOUMA, LOUISIANA" DATED JUNE 14, 2024, PROJECT NUMBER 251305.
7. PROVIDE STRUTS, TIEBACK ANCHORS, BRACES ETC. FOR HORIZONTAL SUPPORT AS REQUIRED FOR EXCAVATION FACES TO BE RETAINED BY SHEET PILES. PROVIDE STRUT REINFORCING FOR SHEET PILING EXTENDING ABOVE FINISHED GRADE.
8. MATERIALS: ASTM A328/A328M, ASTM A572/A572M, OR ASTM A690/A690M; WITH CONTINUOUS INTERLOCK.
9. CORNERS MUST BE ROLL-FORMED CORNER SHAPE WITH CONTINUOUS INTERLOCK.
10. BEFORE STARTING EXCAVATION, INSTALL ONE-PIECE SHEET PILING LENGTHS AND TIGHTLY INTERLOCK VERTICAL EDGES TO FORM A CONTINUOUS BARRIER.
11. PLACE THE PILING USING TEMPLATES AND GUIDE FRAMES UNLESS OTHERWISE RECOMMENDED IN WRITING BY THE SHEET PILING MANUFACTURER.
12. LIMIT VERTICAL OFFSET OF ADJACENT SHEET PILING TO 24 INCHES.
13. ALIGN EXPOSED FACES OF SHEET PILING TO VARY NOT MORE THAN 1 INCH FROM A HORIZONTAL LINE AND NOT MORE THAN 1:120 OUT OF VERTICAL ALIGNMENT.
14. EXTEND TOPS OF SHEET PILING TO MINIMUM 42 INCHES ABOVE FINISHED ELEVATION OF RETAINED EARTH.
15. PROVIDE COATING OF SHEET PILE TO RESIST AGAINST ENVIRONMENTAL AND CHEMICAL DETERIORATION.

POST-INSTALLED ANCHORS:

1. MATERIALS:
   A. CARBON STEEL WEDGE ANCHOR STUDS: ASTM A510 OR ASTM A108.
   B. NUT & WASHER: COMPATIBLE WITH STUD MATERIAL & FINISH.
   C. CARBON STEEL THREADED ROD: ASTM F1554.
   D. CONCRETE REINFORCING DOWELS: ASTM A 615, GRADE 60
2. MECHANICAL ANCHORS AND THREADED INSERTS WILL BE CARBON STEEL WITH ZINC PLATING IN ACCORDANCE WITH ASTM B 633,TYPE III Fe/Zn 5 (SC1), UNLESS NOTED OTHERWISE.
3. ANCHORING TO CONCRETE: TYPE AND SIZE AS INDICATED.
   A. MECHANICAL ANCHORS:
      a. MECHANICAL ANCHORS USED IN CONCRETE WILL HAVE BEEN TESTED AND PREQUALIFIED FOR PERFORMANCE IN CRACKED AND UNCRACKED CONCRETE IN ACCORDANCE WITH ACI 355.2 AND ICC-ES AC193, INCLUDING SEISMIC SHEAR AND TENSION.
      b. EXPANSION ANCHORS: WEDGE TYPE, TORQUE CONTROLLED ANCHORS.
   B. ADHESIVE ANCHORS:
      a. ANCHORS CONSISTING OF AN INSERT AND CARTRIDGE TYPE, TWO COMPONENT, EPOXY OR HYBRID ADHESIVE DISPENSED AND MIXED THROUGH A STATIC MIXING NOZZLE PROVIDED BY THE ADHESIVE MANUFACTURER.
      b. ADHESIVE WILL HAVE BEEN TESTED AND PREQUALIFIED FOR PERFORMANCE IN CRACKED AND UNCRACKED CONCRETE IN ACCORDANCE WITH ICC-ES AC308, INCLUDING SEISMIC SHEAR & TENSION, HORIZONTAL AND OVERHEAD INSTALLATIONS, AND LONG TERM CREEP.
4. IDENTIFY POSITION OF REINFORCING STEEL AND OTHER EMBEDDED ITEMS PRIOR TO DRILLING HOLES FOR ANCHORS. EXERCISE CARE IN DRILLING TO AVOID DAMAGING EXISTING REINFORCING OR EMBEDDED ITEMS. STOP DRILLING AND NOTIFY THE COR IF REINFORCING STEEL OR OTHER EMBEDDED ITEMS ARE ENCOUNTERED DURING DRILLING.
5. INSTALL ANCHORS IN ACCORDANCE WITH MANUFACTURER'S PRINTED INSTALLATION INSTRUCTIONS.

ABBREVIATIONS

(ALL ABBREVIATIONS SHOWN ARE NOT NECESSARILY USED IN THE DRAWINGS)

ADDL	ADDITIONAL
ADJ	ADJACENT
AFF	APPROXIMATE(LY)
APPROX	ARCHITECTURAL
ARCH	AM SOCIETY OF TESTING
ASTM	MATERIALS
BETW	BETWEEN
BL	BASE LINE
BLDG	BUILDING
BM	BEAM
BOT	BOTTOM
BP	BASE PLATE
BRG	BEARING
BW	BOTH WAYS
C	COMPRESSION
CJ	CONSTRUCTION JOINT
CL	CENTERLINE
CLR	CLEAR OR CLEARANCE
CMU	CONCRETE MASONRY UNIT
COL	COLUMN
CONC	CONCRETE
CONST	CONSTRUCTION
CONT	CONTINUOUS
CONT'D	CONTINUED
CONX	CONNECTION
COR	CONTRACTING OFFICER'S REPRESENTATIVE
CU	CUBIC
CY	CUBIC YARD
D	DEPTH
DBL	DOUBLE
DETL	DETAIL
DIA	DIAMETER
DIAG	DIAGONAL
DIM	DIMENSION
DL	DEAD LOAD
DN	DOWN
DRWG	DRAWING(S)
DWL	DOWEL
E	EAST
EF	EACH FACE
EJ	EXPANSION JOINT
ELEC	ELECTRICAL
ELEV,EL	ELEVATION
EQ	EQUAL
EQUIP	EQUIPMENT
EW	EACH WAY
EXIST	EXISTING
EXP	EXPANSION
EXT	EXTERIOR
FDN	FOUNDATION
FIN	FINISH(ED)
FS	FAR SIDE
FT	FOOT
FTG	FOOTING
GA	GAGE OR GAUGE
GALV	GALVANIZED
GB	GRADE BEAM
HORIZ	HORIZONTAL
HP	HIGH POINT
HT	HEIGHT
HSS	HOLLOW STEEL SECTION
HUM	HOUMA-TERREBONNE AIRPORT
IN	INCH
INT	INTERIOR
JT	JOINT
JST	JOIST
K	KIPS (1000 LBS)
KSI	KIPS PER SQUARE INCH
LB,#	POUND
LD	DEVELOPMENT LENGTH
LH	LEFT HAND
LL	LIVE LOAD
LONG	LONGITUDINAL
LP	LOW POINT
LWC	LIGHTWEIGHT CONCRETE
MALSR	MEDIUM INTENSITY APPROACH LIGHTING SYSTEM WITH RUNWAY ALIGNMENT INDICATOR LIGHTS
MATL	MATERIAL
MAX	MAXIMUM
MECH	MECHANICAL
MEP	MECHANICAL, ELECTRICAL, PLUMBING
MFR	MANUFACTURE(R)
MID	MIDDLE
MIN	MINIMUM
MISC	MISCELLANEOUS
N/A	NOT APPLICABLE
NF	NEAR FACE
NIC	NOT IN CONTRACT
NO	NUMBER
NTS	NOT TO SCALE
OA	OVERALL
OC	ON CENTER
OD	OUTSIDE DIAMETER
OF	OUTSIDE FACE
OPNG	OPENING
OPP	OPPOSITE
OPP HND	OPPOSITE HAND
OPT	OPTIONAL
PC	PRECAST CONCRETE
PCF	POUNDS PER CUBIC FOOT
PERP	PERPENDICULAR
PG	PRESTRESSED GIRDER
PL	PLATE
PLUMB	PLUMBING
PREFAB	PREFABRICATED
PRELIM	PRELIMINARY
PRMLD	PREMOLDED
PROJ	PROJECTION
PSF	POUNDS PER SQUARE FOOT
PT	POINT
PVC	POLYVINYL CHLORIDE
PVT	PAVEMENT
R	RIGHT, RISER
RAD	RADIUS
RD	ROOF DRAIN
RE:	REFER
RF	RADIO FREQUENCY
REINF	REINFORCING (-ED,-MENT)
REM	REMINDER
REQD	REQUIRED
REV	REVISION
RH	RIGHT HAND
RJ	RUSTICATION JOINT
RND	ROUND
RO	ROUGH OPENING
RW	RETAINING WALL
S	SOUTH
SC	SHEAR CONNECTORS
SCH	SCHEDULE(D)
S-EOR	STRUCTURAL ENGINEER OF RECORD
SECT	SECTION
SHT	SHEET
SIM	SIMILAR
SJ	SAW JOINT
SL	SLOPE
SLRS	SEISMIC-LOAD-RESISTING SYSTEM
SPA	SPACE
SPEC	SPECIFICATION(S)
SPL	SPECIAL
SQ	SQUARE
SS	STAINLESS STEEL
STD	STANDARD
STIFF	STIFFENER
STIR	STIRRUP
STL	STEEL
STR	STRUCTURAL
STRUCT	STRUCTURAL
SW	SHEAR WALL
SYM	SYMMETRICAL
T	TOP, TENSION
T/	TOP OF
T/CONC	TOP OF CONCRETE
T/FD	TOP OF FLOOR DRAIN
T/FTG	TOP OF FOOTING
T/SLAB	TOP OF SLAB
T&B	TOP AND BOTTOM
TEMP	TEMPERATURE
THK	THICKNESS
THRD	THREADED
TOS	TOP OF STEEL
TRD	TREAD(S)
TRANS	TRANSVERSE
TS	STRUCTURAL TUBING
TYP	TYPICAL
UON	UNLESS OTHERWISE NOTED
USGS	UNITED STATES GEOLOGICAL SURVEY
VERT	VERTICAL
W	WEST, WIDTH, WIDE FLANGE
W/	WITH
W/O	WITHOUT
WP	WORK POINT
WPJ	WEAKENED PLANE JOINT
WT	WEIGHT, STRUCTURAL TEE CUT FROM WIDE FLANGE BEAM
WWF	WELDED WIRE FABRIC

FOR OFFICIAL USE ONLY
PUBLIC AVAILABILITY TO BE DETERMINED UNDER 5 USC 552

JACOBS
1100 N GLEBE RD.
SUITE 500
ARLINGTON, VA 22201

REV.	APPROVED DATE	DESCRIPTION	JCN	REDLINE DATE	APVD

COMMONWEALTH OF VIRGINIA
JOHN C. MACKAIL
Lic. No. 065839
07/16/2025
PROFESSIONAL ENGINEER

Jacobs

DEPARTMENT OF TRANSPORTATION
FEDERAL AVIATION ADMINISTRATION
CENTRAL SERVICE AREA — FORTH WORTH, TX

MALSR
REPLACEMENT RUNWAY 18

STRUCTURAL GENERAL NOTES AND ABBREVIATIONS

HOUMA — HOUMA-TERREBONNE AIRPORT — LA

HOUMA-TERRABONNE AIRPORT
HOUMA, LOUISIANA

REVIEWED BY	SUBMITTED BY		APPROVED BY
	SUBMITTER'S TITLE		APPROVER'S TITLE
	DESIGNED BY I. CHANG	ISSUED BY ENGINEERING SERVICES NAVAIDS	DATE 07-16-25 JCN: 22001835
	DRAWN BY C. MACKAIL		DRAWING NO. HUM-D-MALSR-S-001 REV.
	CHECKED BY W. ZUBRICK		

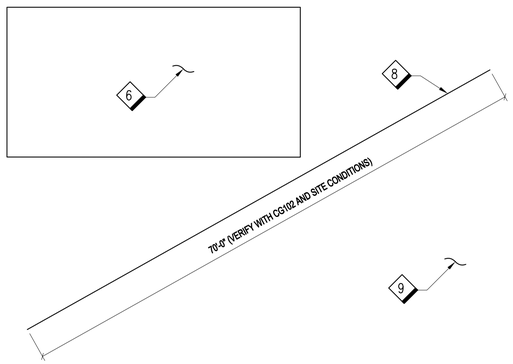

F8 S-101

RETAINING WALL AT STATION 18+01.00

SCALE: NTS

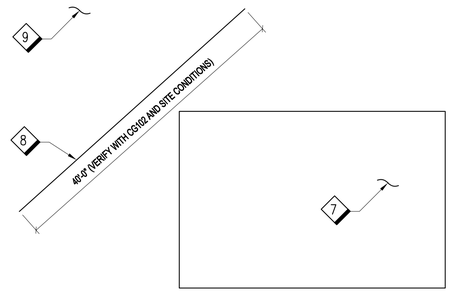

F5 S-101

RETAINING WALL AT STATION 22+90.00

SCALE: NTS

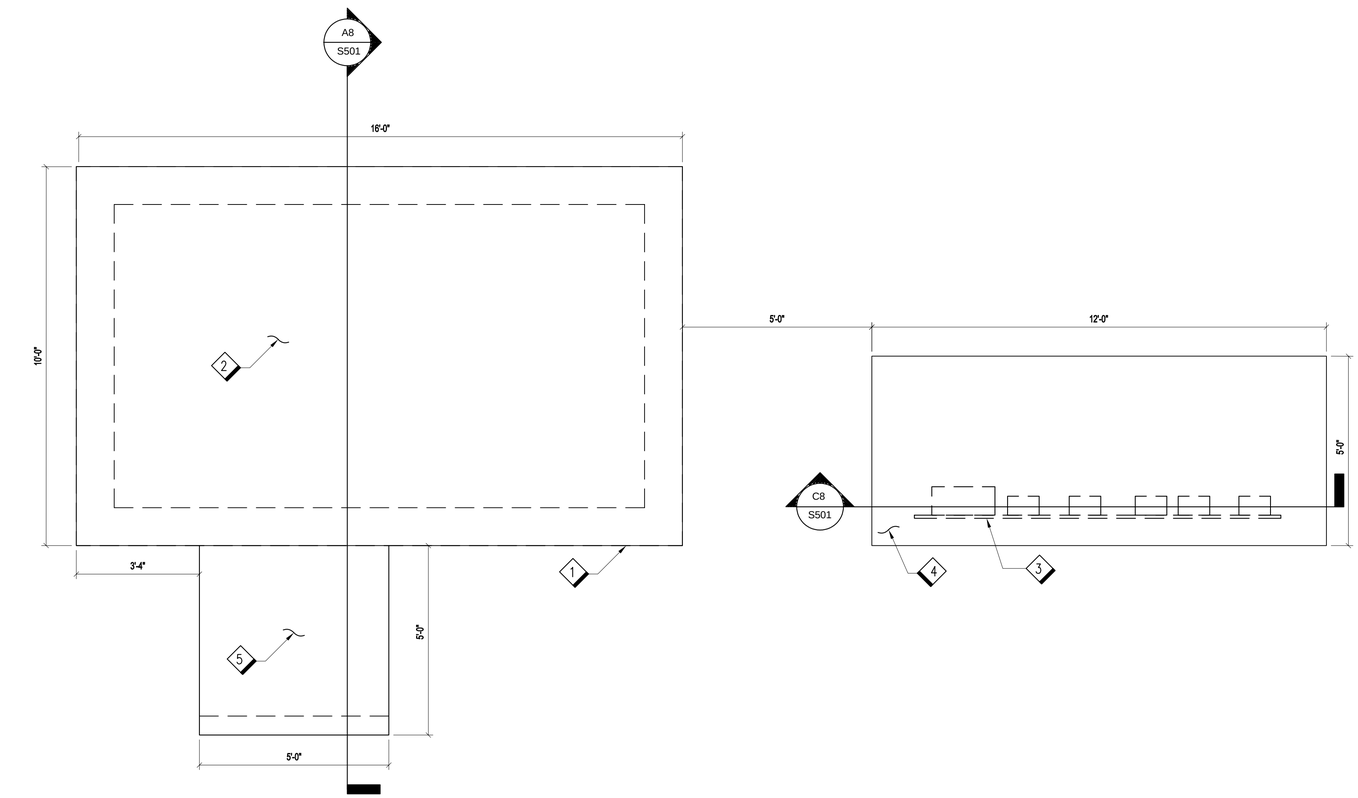

NOTES:

1. VERIFY DIMENSIONS WITH PRE-ENGINEERED SHELTER MANUFACTURER, DUPONT DRAWINGS SHOWN ON SHEETS ES521-ES525.
2. MALSR SERVICE EQUIPMENT RACK DIMENSIONS ARE APPROXIMATE AND DEPEND UPON THE EQUIPMENT SUPPLIED BY THE CONTRACTOR, ENSURE MINIMUM DIMENSIONS SHOWN ON DETAIL 2/ES514 ARE MET.

A8 S-101

MALSR SHELTER AND SERVICE EQUIPMENT RACK FOUNDATION STRUCTURAL PLAN

SCALE" 1/2": 1'

SHEET GENERAL NOTES

A. REFER TO S001 FOR GENERAL NOTES AND ABBREVIATIONS. REFER TO S501 AND S502 FOR DETAILS.

B. SEE CIVIL FOR ELEVATION OF TOP OF GRADE. REFER TO GEOTECHNICAL REPORT FOR FILL REQUIREMENTS.

SHEET KEYNOTES

1. PRE-ENGINEERED MALSR EQUIPMENT SHELTER
2. MALSR EQUIPMENT SHELTER FOUNDATION
3. MALSR SERVICE EQUIPMENT RACK
4. MALSR EQUIPMENT RACK FOUNDATION
5. DOOR STOOP AT MALSR SHELTER
6. LIGHT STATION 18+01.00
7. LIGHT STATION 22+90.00
8. DELEGATED DESIGN: SHEET PILE RETAINING WALL, SEE S001 AND CG102 FOR REQUIREMENTS.
9. BAYOU

N

0 1' 2' 4'

1/2" = 1'-0"

FOR OFFICIAL USE ONLY

PUBLIC AVAILABILITY TO BE DETERMINED UNDER 5 USC 552

COMMONWEALTH OF VIRGINIA
JOHN C. MACKAIL
Lic. No. 065839
07/16/2025
PROFESSIONAL ENGINEER

JACOBS
1100 N GLEBE RD.
SUITE 500
ARLINGTON, VA 22201

REV.	APPROVED DATE	DESCRIPTION	JCN	REDLINE DATE	APVD

Jacobs

DEPARTMENT OF TRANSPORTATION
FEDERAL AVIATION ADMINISTRATION
CENTRAL SERVICE AREA — FORTH WORTH, TX

MALSR
REPLACEMENT RUNWAY 18

MALSR SHELTER AND SERVICE EQUIPMENT
RACK FOUNDATION STRUCTURAL PLAN

HOUMA — HOUMA-TERREBONNE AIRPORT — LA

REVIEWED BY	SUBMITTED BY	APPROVED BY
	SUBMITTER'S TITLE	APPROVER'S TITLE
	DESIGNED BY I. CHANG	ISSUED BY: ENGINEERING SERVICES NAVAIDS
	DRAWN BY C. MACKAIL	DATE 07-16-25
	CHECKED BY W. ZUBRICK	JCN: 22001835
		DRAWING NO. HUM-D-MALSR-S-101
		REV.

HOUMA-TERRABONNE AIRPORT
HOUMA, LOUISIANA

RUNWAY 18 MALSR FOUNDATION SCHEDULE			
	STATION	FOUNDATION TYPE	REMARKS
MALS	0+10.00	THRESHOLD BAR	-
	2+15.00	EMT	-
	4+20.00	EMT	-
	6+25.00	MG-20	-
	8+30.00	MG-20	-
	10+35.00	MG-20	THREE FOUNDATIONS THIS LOCATION
	12+27.00	MG-20	-
	14+19.00	MG-20	-
RAIL	16+11.00	MG-20	-
	18+01.00	MG-20	-
	20+06.00	MG-20	-
	22+90.00	MG-20	-
	24+70.00	MG-20	-

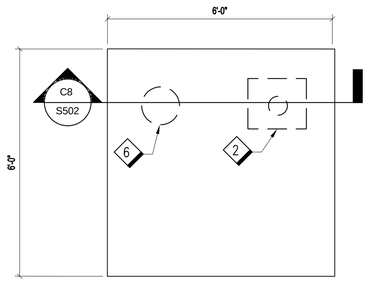

D8 / S102 MALSR FOUNDATION PLAN (MG-20-5 LIGHT)

SCALE: 1/2": 1'

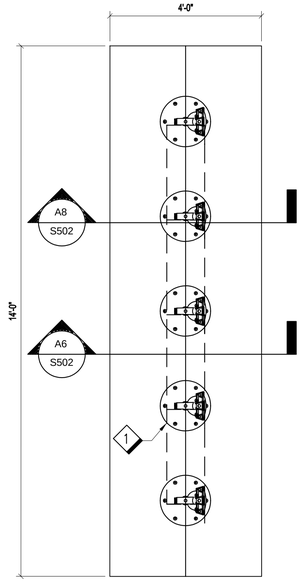

A8 / S102 MALSR FOUNDATION PLAN (EMT)

SCALE: 1/2": 1'

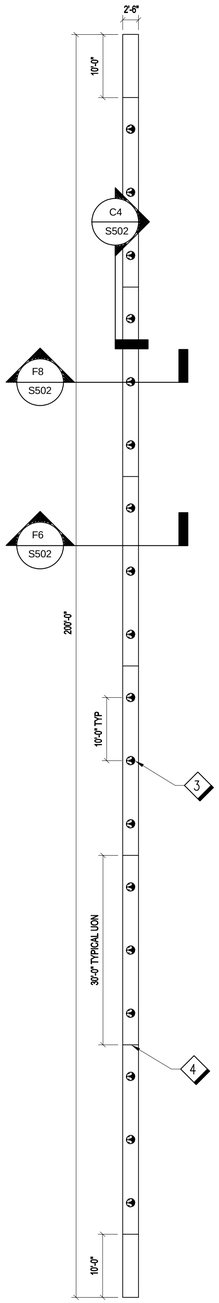

A6 / S102 MALSR FOUNDATION PLAN (THRESHOLD BAR)

SCALE: 1/12": 1'

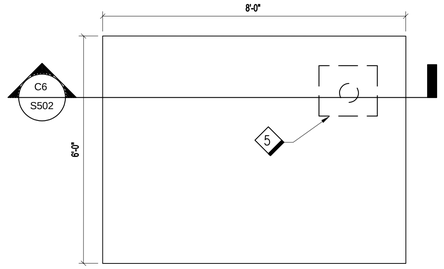

C4 / S102 RAIL FOUNDATION PLAN (MG-20-5 LIGHT)

SCALE: 1/2": 1'

SHEET GENERAL NOTES

A. REFER TO S001 FOR GENERAL NOTES AND ABBREVIATIONS. REFER TO S501 AND S502 FOR DETAILS.

B. VERIFY MALSR SYSTEM LIGHT DIMENSIONS AND ANCHORAGE REQUIREMENTS PRIOR TO START OF CONSTRUCTION.

C. SEE CIVIL FOR GRADING REQUIREMENTS.

SHEET KEYNOTES

1. MALSR EMT LIGHTS, SEE CIVIL FOR LOCATIONS
2. MALSR MG-20 LIR FIBERGLASS POLE, SEE CIVIL FOR LOCATIONS. SEE F3/S102 FOR ANCHOR BOLT PATTERN.
3. MALSR THRESHOLD BAR LIGHT, SEE CIVIL FOR LOCATIONS
4. THRESHOLD BAR EXPANSION JOINT INCLUDING ASTM D1751 JOINT FILLER FULL DEPTH OF CONCRETE WITH ASTM 1854 ELASTIC JOINT SEALER AT TOP.
5. RAIL MG-20 LIR FIBERGLASS POLE, SEE CIVIL FOR LOCATIONS. SEE F3/S102 FOR ANCHOR BOLT PATTERN.
6. BASE CAN, SEE ES506.

N

0 6' 12' 24'
1/12" = 1'-0"

0 1' 2' 4'
1/2" = 1'-0"

FOR OFFICIAL USE ONLY
PUBLIC AVAILABILITY TO BE DETERMINED UNDER 5 USC 552

COMMONWEALTH OF VIRGINIA
JOHN C. MACKAIL
Lic. No. 065839
07/16/2025
PROFESSIONAL ENGINEER

JACOBS
1100 N GLEBE RD.
SUITE 500
ARLINGTON, VA 22201

REV.	APPROVED DATE	DESCRIPTION	JCN	REDLINE DATE	APVD

Jacobs

DEPARTMENT OF TRANSPORTATION
FEDERAL AVIATION ADMINISTRATION
CENTRAL SERVICE AREA — FORTH WORTH, TX

MALSR
REPLACEMENT RUNWAY 18

STRUCTURAL MALSR
FOUNDATION PLANS

HOUMA — HOUMA-TERREBONNE AIRPORT — LA

HOUMA-TERRABONNE AIRPORT
HOUMA, LOUISIANA

REVIEWED BY	SUBMITTED BY		APPROVED BY
	SUBMITTER'S TITLE		APPROVER'S TITLE
DESIGNED BY I. CHANG	ISSUED BY	DATE 07-16-25	JCN: 22001835
DRAWN BY C. MACKAIL	ENGINEERING SERVICES NAVAIDS	DRAWING NO. HUM-D-MALSR-S-102	REV.
CHECKED BY W. ZUBRICK			

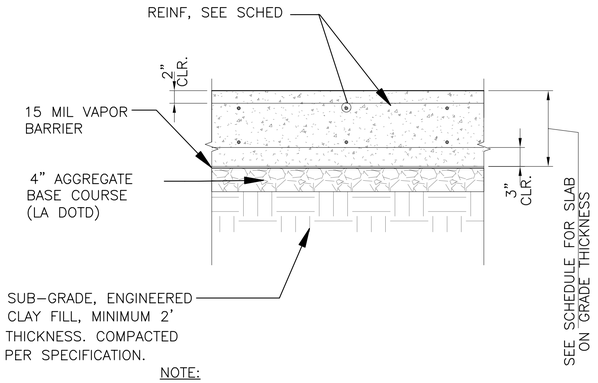

NOTE:

1. REFER TO GENERAL NOTES, AND SPECIFICATIONS FOR OTHER SI INFORMATION AND REQUIREMENTS.
2. FILL REPLACEMENT MUST EXTEND LATERALLY AT LEAST 3 FEET BEYOND THE EDGE OF SLAB FOOTPRINT.

F8 / S501 TYPICAL FOUNDATION SLAB DETAIL

SCALE: NTS

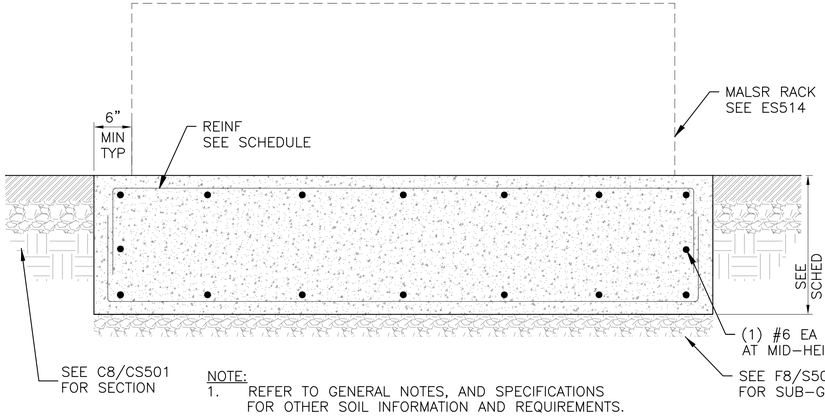

NOTE:

1. REFER TO GENERAL NOTES, AND SPECIFICATIONS FOR OTHER SOIL INFORMATION AND REQUIREMENTS.
2. REFER TO CIVIL FOR LOCATION.
3. PROVIDE LONG SWEEP ELBOWS FOR ALL THROUGH CONDUITS.

C8 / S501 EQUIPMENT RACK FOUNDATION SECTION

SCALE: NTS

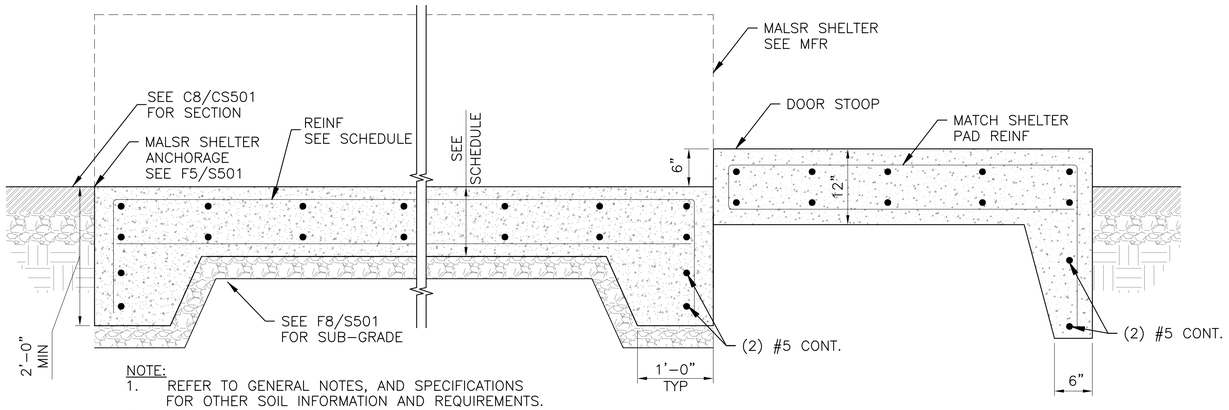

NOTE:

1. REFER TO GENERAL NOTES, AND SPECIFICATIONS FOR OTHER SOIL INFORMATION AND REQUIREMENTS.
2. REFER TO CIVIL FOR LOCATION.

A8 / S501 SHELTER FOUNDATION SECTION

SCALE: NTS

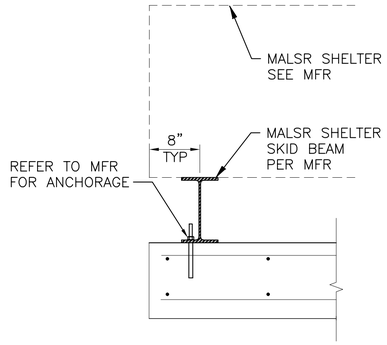

NOTE:

1. SEE SCHEDULE FOR REINFORCEMENT.
2. DO NOT DAMAGE FOUNDATION SLAB REINFORCEMENT WHEN INSTALLING SHELTER ANCHORAGE.
3. THICKENED FOUNDATION EDGE AND SUBGRADE NOT SHOWN.
4. PROVIDE NON-SHRINK GROUT LEVELING PAD BELOW SKID BEAM AS REQUIRED.
5. GALVANIZE EXPOSED STEEL MEMBERS.

F5 / S501 SHELTER ANCHORAGE DETAIL

SCALE: NTS

REINFORCEMENT STANDARD HOOK DEVELOPMENT LENGTHS

REINFORCEMENT SIZE									f'c (psi) @ 28 DAYS
#3	#4	#5	#6	#7	#8	#9	#10	#11	
6	7	9	12	15	18	22	26	31	4500

REINFORCEMENT DEVELOPMENT LENGTHS

REINFORCED CONCRETE										f'c (psi) @ 28 DAYS
REINF. LOCATION	REINFORCEMENT SIZE									
	#3	#4	#5	#6	#7	#8	#9	#10	#11	
TOP	18	24	30	35	51	59	66	74	82	4500
OTHER	14	18	23	27	40	45	51	57	64	

REINFORCEMENT CLASS "B" LAP SPLICES (LENGTHS IN INCHES)

REINFORCED CONCRETE										f'c (psi) @ 28 DAYS
REINF. LOCATION	REINFORCEMENT SIZE									
	#3	#4	#5	#6	#7	#8	#9	#10	#11	
TOP	24	31	39	47	68	78	88	74	109	4500
OTHER	18	24	30	35	51	59	66	76	82	

TOP REINFORCING IS HORIZONTAL REINFORCEMENT THAT HAS MORE THAN TWELVE INCHES OF CONCRETE PLACED BELOW IT.

FOUNDATION SCHEDULE

MARK	DIMENSIONS			REINFORCING	REMARKS
	WIDTH	LENGTH	THICKNESS		
SHELTER	10'-0"	16'-0"	1'-0"	#5@12" EW T&B	REFER TO DETAIL A8/S501
EQUIPMENT RACK	5'-0"	12'-0"	2'-6"	#6@12" EW T&B	REFER TO DETAIL C8/S501
MALSR (EMT)	4'-0"	14'-0"	3'-0"	REFER TO DETAIL A8&A6/S502	REFER TO DETAIL A8/S502
MALSR (MG-20)	6'-0"	6'-0"	3'-0"	#6@6" EW T&B	REFER TO DETAIL C8/S502
RAIL (MG-20)	8'-0"	6'-0"	3'-0"	#6@6" EW T&B	REFER TO DETAIL C6/S502
MALSR (THRESHOLD BAR)	2'-6"	200'-0"	3'-0"	REFER TO DETAIL F6&F8/S502	REFER TO DETAIL F8/S502

FOR OFFICIAL USE ONLY

PUBLIC AVAILABILITY TO BE DETERMINED UNDER 5 USC 552

COMMONWEALTH OF VIRGINIA
JOHN C. MACKAIL
Lic. No. 065839
07/16/2025
PROFESSIONAL ENGINEER

JACOBS
1100 N GLEBE RD.
SUITE 500
ARLINGTON, VA 22201

REV.	APPROVED DATE	DESCRIPTION	JCN	REDLINE DATE	APVD

DEPARTMENT OF TRANSPORTATION
FEDERAL AVIATION ADMINISTRATION
CENTRAL SERVICE AREA — FORTH WORTH, TX

MALSR REPLACEMENT RUNWAY 18

STRUCTURAL SECTIONS AND DETAILS

HOUMA — HOUMA-TERREBONNE AIRPORT — LA

HOUMA-TERRABONNE AIRPORT
HOUMA, LOUISIANA

REVIEWED BY	SUBMITTED BY	APPROVED BY
	SUBMITTER'S TITLE	APPROVER'S TITLE
	DESIGNED BY I. CHANG	ISSUED BY ENGINEERING SERVICES NAVAIDS
	DRAWN BY C. MACKAIL	DATE 07-16-25 JCN: 22001835
	CHECKED BY W. ZUBRICK	DRAWING NO. HUM-D-MALSR-S-501 REV.

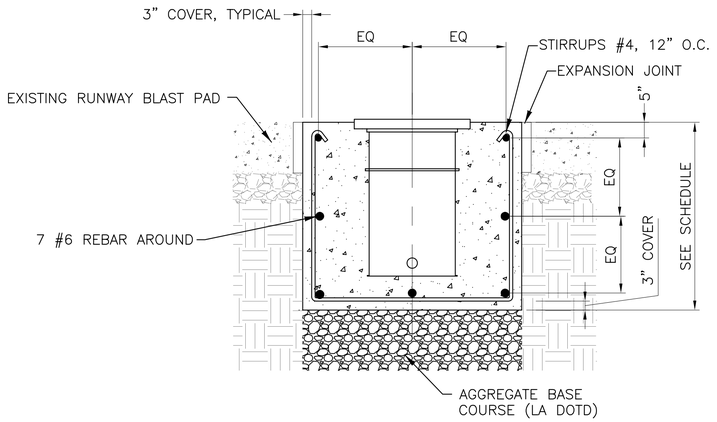

F8 S502 **THRESHOLD BAR FOUNDATION DETAIL AT LIGHT BASE**
SCALE: NTS

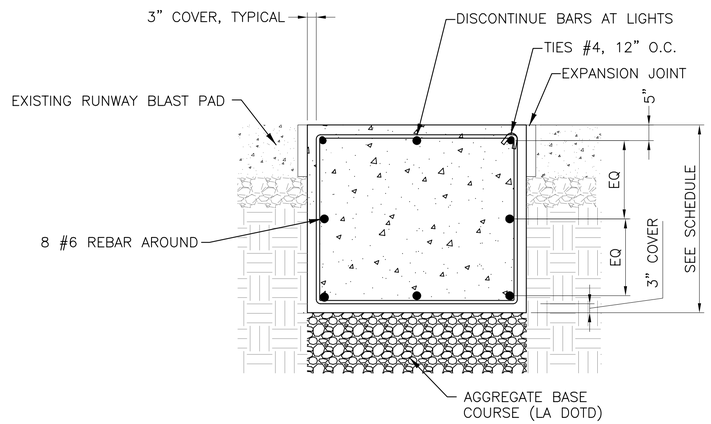

F6 S502 **THRESHOLD BAR FOUNDATION DETAIL BETWEEN LIGHT BASE**
SCALE: NTS

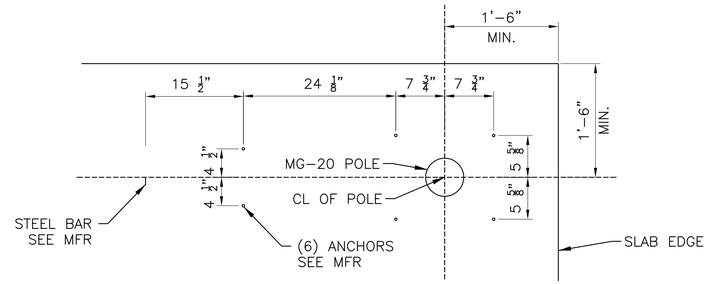

F3 S502 **MG-20 LIGHT POLE ANCHOR PATTERN**
SCALE: NTS

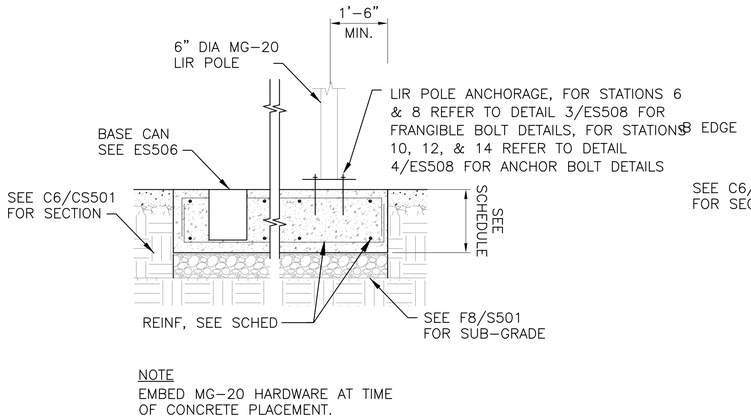

NOTE
EMBED MG–20 HARDWARE AT TIME OF CONCRETE PLACEMENT.

C8 S502 **MG-20-5 LIGHT FOUNDATION DETAIL**
SCALE: NTS

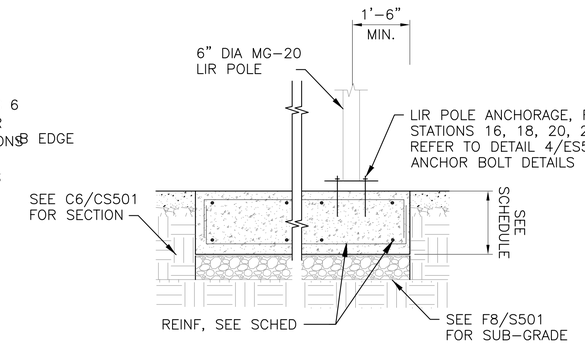

NOTE
EMBED MG–20 HARDWARE AT TIME OF CONCRETE PLACEMENT.

C6 S502 **RAIL MG-20 FOUNDATION DETAIL**
SCALE: NTS

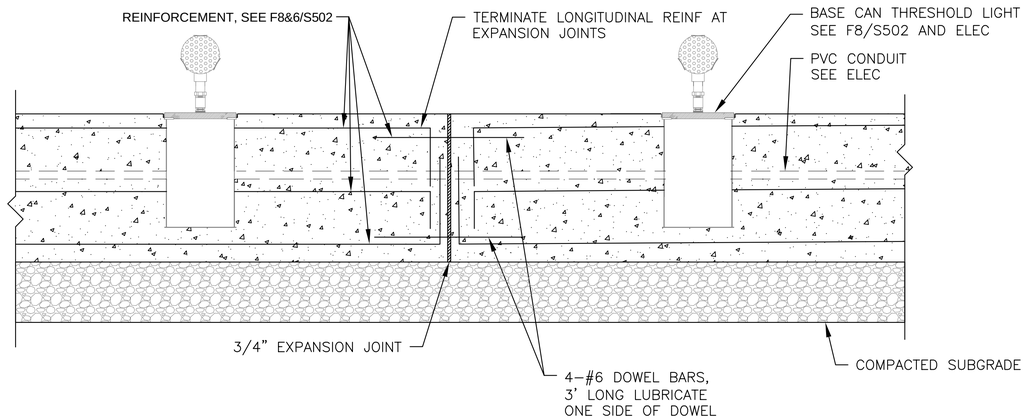

C4 S502 **THRESHOLD BAR FOUNDATION AT EXPANSION JOINT**
SCALE: NTS

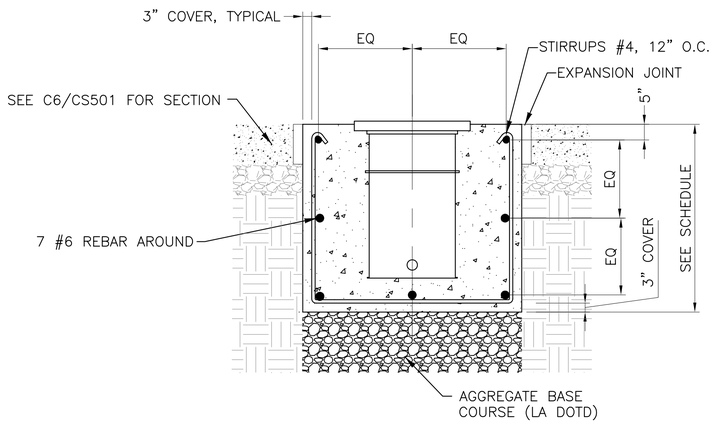

A8 S502 **EMT FOUNDATION DETAIL AT LIGHT BASE**
SCALE: NTS

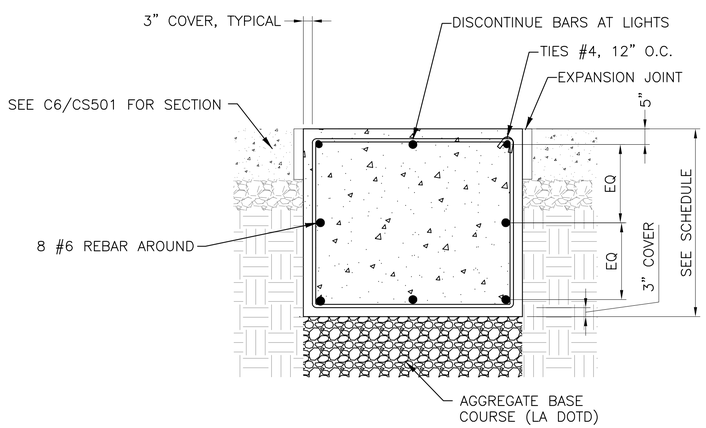

A6 S502 **EMT FOUNDATION DETAIL BETWEEN LIGHT BASE**
SCALE: NTS

FOR OFFICIAL USE ONLY
PUBLIC AVAILABILITY TO BE DETERMINED UNDER 5 USC 552

COMMONWEALTH OF VIRGINIA
JOHN C. MACKAIL
Lic. No. 065839
PROFESSIONAL ENGINEER
07/16/2025

JACOBS
1100 N GLEBE RD.
SUITE 500
ARLINGTON, VA 22201

REV.	APPROVED DATE	DESCRIPTION	JCN	REDLINE DATE	APVD

DEPARTMENT OF TRANSPORTATION
FEDERAL AVIATION ADMINISTRATION
CENTRAL SERVICE AREA — FORTH WORTH, TX

Jacobs

MALSR
REPLACEMENT RUNWAY 18
STRUCTURAL SECTIONS AND DETAILS

HOUMA — HOUMA-TERREBONNE AIRPORT — LA

HOUMA-TERRABONNE AIRPORT
HOUMA, LOUISIANA

REVIEWED BY	
SUBMITTED BY	
SUBMITTER'S TITLE	
APPROVED BY	
APPROVER'S TITLE	
DESIGNED BY	I. CHANG
DRAWN BY	C. MACKAIL
CHECKED BY	W. ZUBRICK
ISSUED BY	ENGINEERING SERVICES NAVAIDS
DATE	07-16-25
JCN:	22001835
DRAWING NO.	HUM-D-MALSR-S-502
REV.	