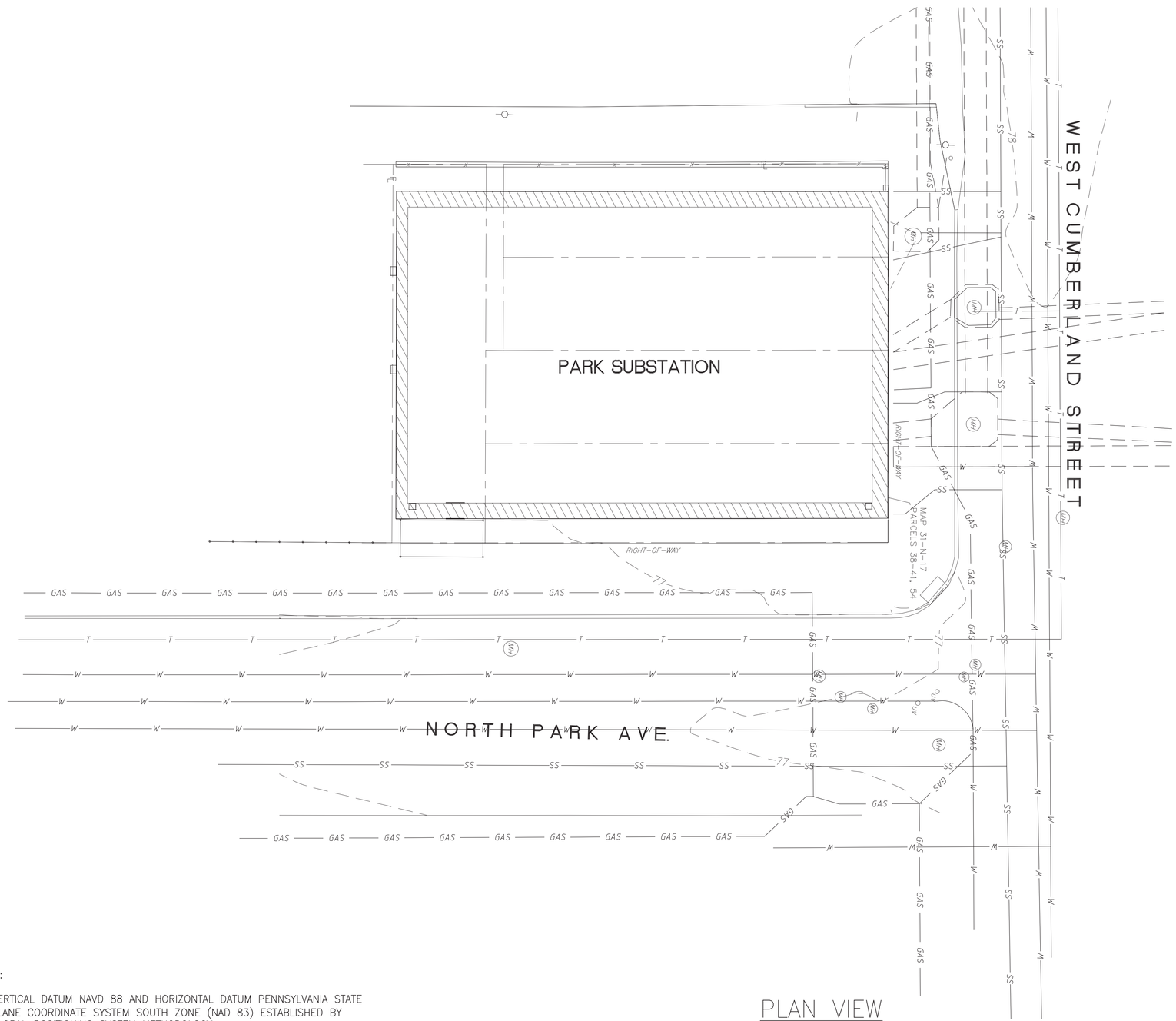

PLAN VIEW

10 5 0 10

SCALE: 1"=10'

NOTES:

1. VERTICAL DATUM NAVD 88 AND HORIZONTAL DATUM PENNSYLVANIA STATE PLANE COORDINATE SYSTEM SOUTH ZONE (NAD 83) ESTABLISHED BY GLOBAL POSITIONING SYSTEM METHODOLOGY.
2. UNDERGROUND UTILITIES AND FACILITIES HAVE BEEN PLOTTED FROM MULTIPLE SOURCES AND ARE SHOWN IN APPROXIMATE LOCATIONS. FIELD VERIFY AS NECESSARY.
3. PROPERTY LINE INFORMATION HEREON SHOULD BE CONSIDERED APPROXIMATE AND IS SHOWN FOR INFORMATION ONLY, BASED ON THE PHILADELPHIA DEPARTMENT OF RECORDS TAX MAP 31-N-17.

PENNSYLVANIA ONE CALL SYSTEM, INC.
1-800-242-1776
DIAL 8-1-1 BEFORE YOU DIG!

CALL BEFORE YOU DIG

PENNSYLVANIA LAW REQUIRES 3 WORKING DAYS NOTICE FOR CONSTRUCTION PHASE AND 10 WORKING DAYS IN DESIGN STAGE – STOP
CALL 1-800-242-1776

WWW.PA1CALL.ORG

DESIGN # 2016 342 1682

CONSTRUCTION # _____

LEGEND:

- W — EXISTING WATER LINE
- EU — EXISTING UNDERGROUND ELECTRIC
- GAS — GAS — EXISTING GAS LINE
- T — EXISTING UNDERGROUND COMMUNICATIONS
- EXISTING DUCT BANK
- SS — EXISTING SANITARY SEWER
- x — EXISTING FENCE
- ℄ — PROPERTY LINE
- (MH) EXISTING MANHOLE

50% SUBMISSION
NOT FOR CONSTRUCTION

SOUTHEASTERN PENNSYLVANIA TRANSPORTATION AUTHORITY
EM&C DIVISION
1234 MARKET ST, 13TH FL.
PHILADELPHIA, PA 19107

CHIEF ENGINEER - EM&C
CHIEF ENGINEERING OFFICER - B&B
CHIEF RAIL TRANSIT OFFICER
SYSTEM SAFETY
DIRECTOR OF ENGINEERING - B&B
MANAGER - ARCH / ENGINEERING
PROJECT MANAGER

HDR Engineering, Inc.
Philadelphia, PA

REV	DATE	DESCRIPTION	BY	CK'D	APV'D

DATE PRINTED: 10/21/2025

PARK
SUBWAY/ELEVATED TRAINS
TRACTION POWER SUBSTATION REHABILITATION
CIVIL
EXISTING CONDITIONS

SCALE: AS SHOWN	SCALE FACTOR: -
DATE: 08/22/2025	DRAWN BY: ARG
	CHECKED BY: SEG
WORK ORDER NO.: 276482	
SHEET NUMBER: **C200**	
DWG. NO.: 1 OF 3	
SHT. NO.: 132 OF 452	
ARCHIVE NO.:	
COMPUTER FILE NO.: 17AN-C200	REV. NO.: -

C:\PW\WORKING\PITTD\19792331\17AN-C200.DWG

STATUS: 50% SUBMISSION

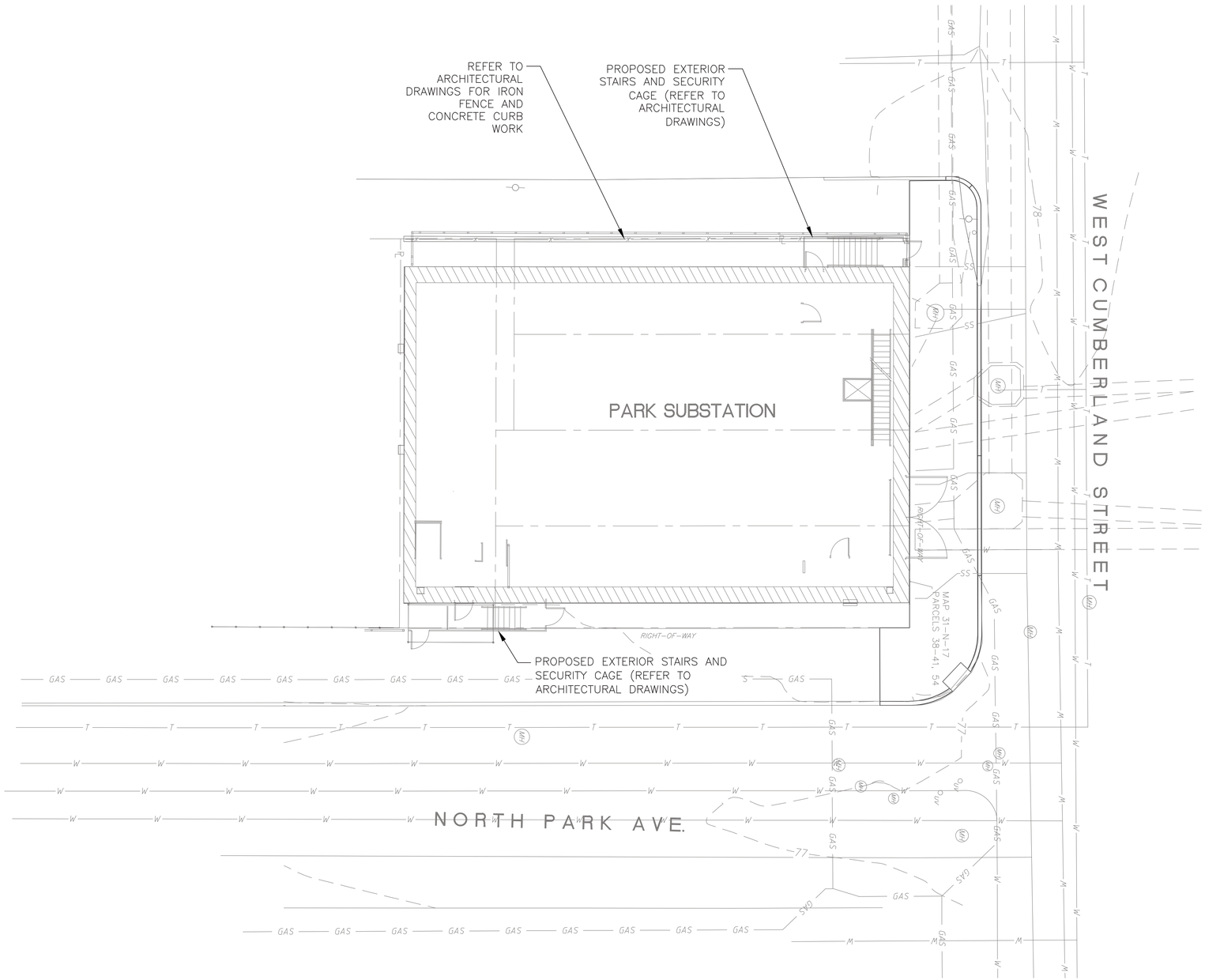

NOTES:

1. THE CONTRACTOR TO DESIGN ADA COMPLIANT RAMP PER PENNDOT RC-67M.

PLAN VIEW

10 5 0 10

SCALE: 1"=10'

PENNSYLVANIA ONE CALL SYSTEM, INC. 1-800-242-1776 DIAL 8-1-1 BEFORE YOU DIG!

CALL BEFORE YOU DIG

PENNSYLVANIA LAW REQUIRES 3 WORKING DAYS NOTICE FOR CONSTRUCTION PHASE AND 10 WORKING DAYS IN DESIGN STAGE – STOP CALL 1-800-242-1776

WWW.PA1CALL.ORG

DESIGN # 2016 342 1682

CONSTRUCTION # _____

LEGEND:

- W — EXISTING WATER LINE
- EU — EXISTING UNDERGROUND ELECTRIC
- E — EXISTING OVERHEAD ELECTRIC
- T — EXISTING UNDERGROUND COMMUNICATIONS
- EXISTING DUCT BANK
- SS — EXISTING SANITARY/SEWER
- x — EXISTING FENCE
- PL — PROPERTY LINE
- (MH) EXISTING MANHOLE
- PROPOSED CONCRETE SIDEWALK REPLACEMENT

50% SUBMISSION
NOT FOR CONSTRUCTION

SOUTHEASTERN PENNSYLVANIA TRANSPORTATION AUTHORITY
EM&C DIVISION
1234 MARKET ST, 13TH FL.
PHILADELPHIA, PA 19107

CHIEF ENGINEER - EM&C
CHIEF ENGINEERING OFFICER - B&B
CHIEF RAIL TRANSIT OFFICER
SYSTEM SAFETY
DIRECTOR OF ENGINEERING - B&B
MANAGER - ARCH / ENGINEERING
PROJECT MANAGER

HDR
HDR Engineering, Inc.
Philadelphia, PA

REV	DATE	DESCRIPTION	BY	CK'D	APD

DATE PRINTED: 10/21/2025

PARK
SUBWAY/ELEVATED TRAINS
TRACTION POWER SUBSTATION REHABILITATION
CIVIL
SITE PLAN

SCALE: AS SHOWN
SCALE FACTOR: -
DATE: 08/22/2025
DRAWN BY: ARG
CHECKED BY: SEG
WORK ORDER NO.: 276482
SHEET NUMBER: **C201**
DWG. NO.: 2 OF 3
SHT. NO.: 133 OF 452
ARCHIVE NO.:
COMPUTER FILE NO.: 17AN-C201
REV. NO.: -

STATUS: 50% SUBMISSION

C:\PW\WORKING\PITTD1979233\17AN-C201.DWG

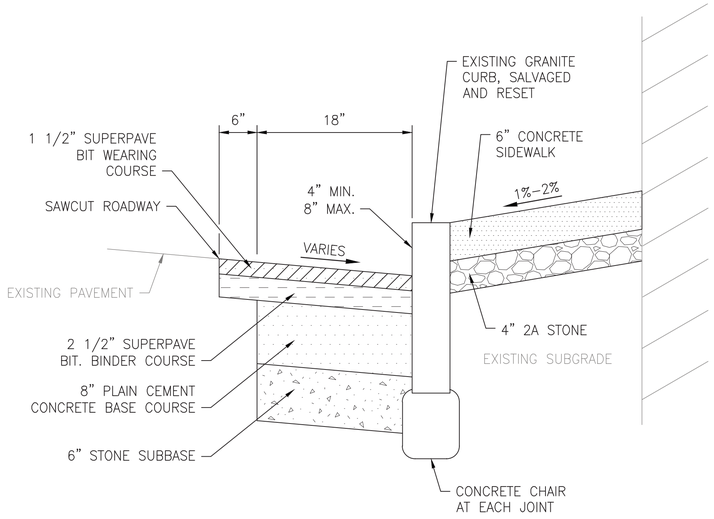

SUBSTATION

TYPICAL SECTION

GRANITE CURB AND CONCRETE SIDEWALK

N.T.S.

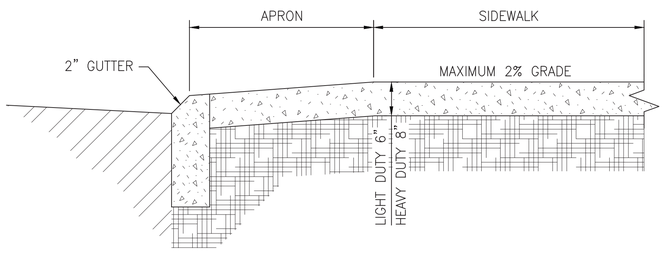

DRIVEWAY AND DEPRESSED CURB

N.T.S.

NOTES:

1. 8 PERCENT MAXIMUM CHANGE IN GRADE BETWEEN ROAD SURFACE AND DRIVEWAY.
2. REFER TO CITY OF PHILADELPHIA DEPARTMENT OF STREETS STANDARD DRIVEWAY DETAIL SC0105 AND PENNDOT RC–67M.
3. MAINTAIN A 6' WALKING ZONE WITH CROSS SLOPE NOT TO EXCEED 2 PERCENT.
4. MAINTAIN A MINIMUM CURB REVEAL OF 4".

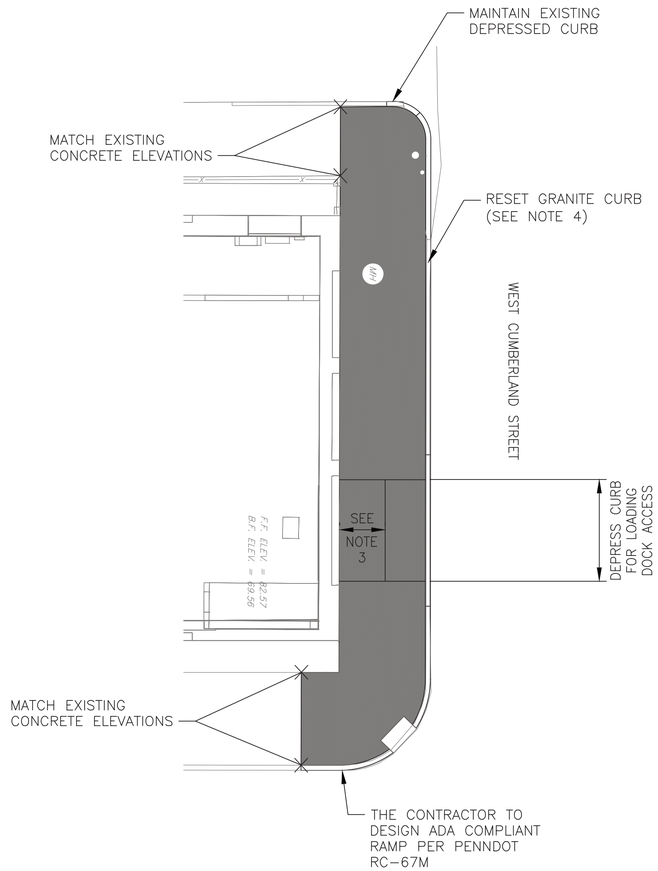

CONCEPTUAL SIDEWALK GRADING AT WEST CUMBERLAND ST

10 5 0 10

SCALE: 1"=10'

50% SUBMISSION
NOT FOR CONSTRUCTION

SOUTHEASTERN PENNSYLVANIA TRANSPORTATION AUTHORITY
EM&C DIVISION
1234 MARKET ST, 13TH FL.
PHILADELPHIA, PA 19107

CHIEF ENGINEER - EM&C
CHIEF ENGINEERING OFFICER - B&B
CHIEF RAIL TRANSIT OFFICER
SYSTEM SAFETY
DIRECTOR OF ENGINEERING - B&B
MANAGER - ARCH / ENGINEERING
PROJECT MANAGER

HDR Engineering, Inc.
Philadelphia, PA

REV	DATE	DESCRIPTION	BY	CKD	APP

DATE PRINTED: 10/21/2025

PARK
SUBWAY/ELEVATED TRAINS
TRACTION POWER SUBSTATION REHABILITATION
CIVIL
CURB & PAVEMENT DETAILS

SCALE: AS SHOWN	SCALE FACTOR: -
DATE: 08/22/2025	DRAWN BY: ARG
	CHECKED BY: SEG
WORK ORDER NO.: 276482	
SHEET NUMBER: **C202**	
DWG. NO.: 3 OF 3	
SHT. NO.: 134 OF 448	
ARCHIVE NO.:	
COMPUTER FILE NO.: 17AN-C202	REV. NO.: -

STATUS: 50% SUBMISSION

C:\PW\WORKING\PITTD\19782331\17AN-C202.DWG

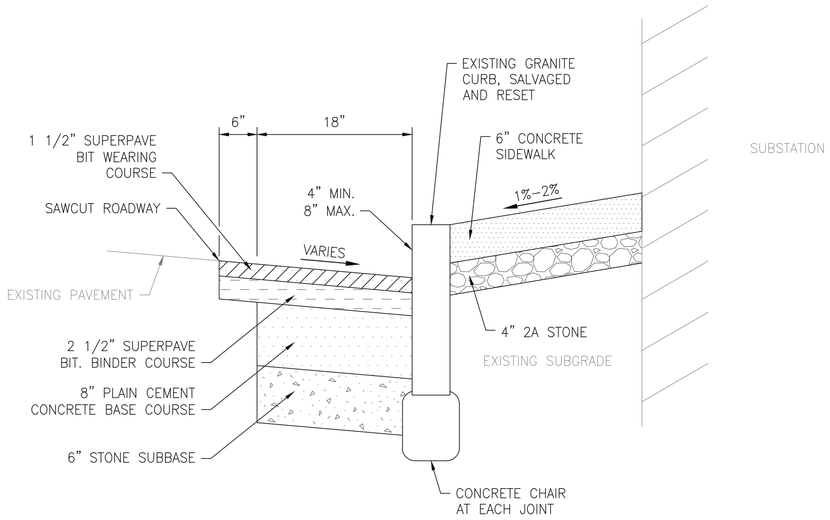

TYPICAL SECTION

GRANITE CURB AND CONCRETE SIDEWALK

N.T.S.

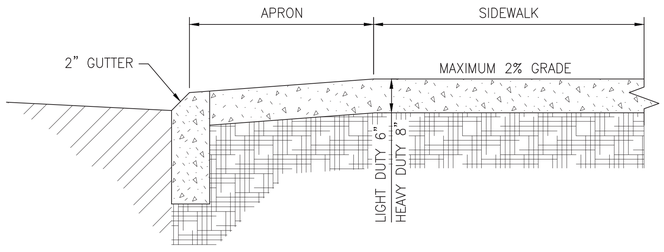

DRIVEWAY AND DEPRESSED CURB

N.T.S.

50% SUBMISSION
NOT FOR CONSTRUCTION

SOUTHEASTERN PENNSYLVANIA TRANSPORTATION AUTHORITY
EM&C DIVISION
1234 MARKET ST, 13TH FL, PHILADELPHIA, PA 19107

CHIEF ENGINEER - EM&C
CHIEF ENGINEERING OFFICER - B&B
CHIEF RAIL TRANSIT OFFICER
SYSTEM SAFETY
DIRECTOR OF ENGINEERING - B&B
MANAGER - ARCH / ENGINEERING
PROJECT MANAGER

HDR Engineering, Inc.
Philadelphia, PA

REV	DATE	DESCRIPTION	BY	CK'D	APP'D

PARK
SUBWAY/ELEVATED TRAINS
TRACTION POWER SUBSTATION REHABILITATION
CIVIL
CURB & PAVEMENT DETAILS

SCALE: AS SHOWN
SCALE FACTOR: -
DATE: 08/22/2025
DRAWN BY: ARG
CHECKED BY: SEG
WORK ORDER NO.: 276482
SHEET NUMBER: **C202**
DWG. NO.: 3 OF 3
SHT. NO.: 134 OF 452
ARCHIVE NO.:
COMPUTER FILE NO.: 17AN-C202
REV. NO.: -

DATE PRINTED: 10/21/2025
STATUS: 50% SUBMISSION
C:\PWWORKING\PITT\D1979233\17AN-C202.DWG

LEGEND–SYMBOLS:

SYMBOL	DESCRIPTION
DIMENSION	DIMENSION TO CENTER LINE
DIMENSION	DIMENSION TO FINISHED FACE
DIMENSION	DIMENSION TO ROUGH FACE
1 A100 PLAN SCALE: 1/4" = 1'–0" FILE: – REF: –	DRAWING TITLE
A A100	ELEV/SECT REFERENCE; ELEVATION REFERENCE; DWG/SHT NO.
A100 1 2	ELEV REFERENCE; INTERIOR ELEVATION REFERENCE; DWG/SHT NO.
1 A100	DETAIL REFERENCE
1 A100	SECTION REFERENCE
1	PARTITION TYPE
1	REVISION NUMBER
1	DOOR NUMBER
1	WINDOW NUMBER
1	COLUMN GRID NUMBER
0.0 REF. ELEV.	REFERENCE ELEVATION LINE
	EXISTING DOOR
	NEW DOOR
	ACCESSIBLE SYMBOL
UP DN	STAIR/RAMP DIRECTION
12 X	ROOF PITCH
+24.90	EXISTING SPOT ELEVATION
+24.90	NEW SPOT ELEVATION
	NORTH ARROW

LEGEND–HATCH PATTERNS:

SYMBOL	DESCRIPTION
	EARTH
	SAND
	CAST STONE
	CONCRETE
	BRICK
	MASONRY–CMU
	GLAZED CMU
	2–HOUR FIRE RATED CMU WALL
	CERAMIC TILE
	RIGID INSULATION BOARD
	SOFT INSULATION
	WOOD FRAMING–CONTINUOUS
	WOOD BLOCKING
	PLYWOOD
	FINISH WOOD
	STEEL
	ALUMINUM

GENERAL NOTES:

1. ALL WORK SHALL BE PERFORMED IN STRICT ACCORDANCE WITH THE CONTRACT DOCUMENTS INCLUDING THE SPECIFICATIONS AND THESE DRAWINGS.
2. DETAILS SHOWN ARE TYPICAL; SIMILAR DETAILS APPLY TO SIMILAR CONDITIONS UNLESS OTHERWISE NOTED.
3. THE DRAWINGS INDICATE A SPECIFIC DESIGN INTENT. THIS INTENT IS NOT SUBJECT TO SUBSTITUTION. WHERE SPECIFIC MATERIALS ARE IDENTIFIED AND ARCHITECTURAL STYLES SHOWN, THESE SHALL BE PROVIDED UNLESS APPROVED OTHERWISE.
4. ALL WORK SHALL BE PERFORMED IN STRICT ACCORDANCE WITH THE COMMONWEALTH OF PENNSYLVANIA CODES, RULES AND REGULATIONS, LOCAL CODES AND ALL OTHER STATE AGENCIES HAVING JURISDICTION OVER ANY PORTION OF WORK SPECIFIED IN THESE DOCUMENTS.
5. THE CONTRACTOR SHALL SUBMIT A WORKPLAN FOR SEPTA APPROVAL, SHOWING A DETAILED WORK SCHEDULE.
6. THE DIMENSIONS SHOWN ON THE DRAWINGS MAY VARY FROM THE ACTUAL EXISTING DIMENSIONS IN THE FIELD. IT IS, THEREFORE, IMPERATIVE THAT THE CONTRACTOR, PRIOR TO COMMENCEMENT OF WORK, TAKE EXACT MEASUREMENTS TO VERIFY ALL DIMENSIONS SHOWN ON THE DRAWINGS AS WELL AS OBTAIN OTHER NECESSARY DIMENSIONS FOR THE PURPOSE OF PREPARING SUBMITTALS. SHOP DRAWINGS AND ANY OTHER DRAWINGS PREPARED BY THE CONTRACTOR SHALL INCLUDE A STATEMENT CERTIFYING THAT THOSE HAVE BEEN PREPARED IN ACCORDANCE WITH THE FIELD–MEASURED DIMENSIONS.
7. THE SEPTA PROJECT MANAGER SHALL BE NOTIFIED IN WRITING OF ANY CONDITIONS THAT VARY FROM THOSE SHOWN ON THE DRAWINGS. THE CONTRACTOR'S WORK SHALL NOT VARY FROM THE DRAWINGS WITHOUT THE EXPRESS WRITTEN APPROVAL OF THE SEPTA PROJECT MANAGER.
8. THE CONTRACTOR IS INSTRUCTED TO COOPERATE WITH SEPTA'S REPRESENTATIVES AND ALL OTHER CONTRACTORS PERFORMING WORK ON THIS JOB SITE DURING THE PERFORMANCE OF THIS CONTRACT.
9. UNLESS OTHERWISE NOTED ON THE DRAWINGS AND SPECIFICATIONS. ALL FACILITIES SHALL REMAIN IN PLACE AND IN SERVICE DURING DEMOLITION AND CONSTRUCTION UNLESS OTHERWISE NOTED. THE CONTRACTOR SHALL PROTECT, PRESERVE, INCORPORATE, AND TEMPORARILY RELOCATE (IF REQUIRED) AND SUPPORT ALL EXISTING FACILITIES, STRUCTURE, UTILITIES, AND OTHER ITEMS TO REMAIN, SUBJECT TO THE APPROVAL OF THE SEPTA PROJECT MANAGER. THE CONTRACTOR IS TO REPAIR OR REPLACE ANY ITEMS DAMAGED DURING THE COURSE OF WORK TO THE SATISFACTION AND APPROVAL OF THE SEPTA PROJECT MANAGER AT NO ADDITIONAL COST TO SEPTA.
10. THE CONTRACTOR SHALL MAINTAIN FLOW FOR ALL EXISTING UTILITIES. COORDINATE ANY REQUIRED SHUTDOWNS WITH THE SEPTA PROJECT MANAGER.
11. THE CONTRACTOR SHALL BE RESPONSIBLE FOR OBTAINING AND INCURRING THE COST OF ALL REQUIRED PERMITS AND CERTIFICATES.
12. THE CONTRACTOR SHALL COMPLY WITH ALL REQUIRED PERMITS.
13. IT IS THE CONTRACTOR'S RESPONSIBILITY TO EXAMINE ALL DRAWINGS AND SPECIFICATIONS, AND COORDINATE WORK WITH ALL OTHER CONTRACTORS AND SUBCONTRACTORS FOR THIS PROJECT.
14. THE CONTRACTOR SHALL TAKE REASONABLE CARE TO MAINTAIN A SAFE AND SECURE WORK AREA AT ALL TIMES THROUGH THE USE OF, AMONG OTHER THINGS, SAFETY EQUIPMENT, FENCING, TEMPORARY DIRECTIONAL SIGNAGE AND FALL PROTECTION.
15. ACCESS TO THE WORK SITE AND STORAGE OF MATERIALS AND EQUIPMENT ON THE PREMISES OR AS DETERMINED BY SEPTA SHALL BE APPROVED BY THE SEPTA PROJECT MANAGER.
16. THE CONTRACTOR SHALL KEEP THE ADJACENT WORK AREAS, STAGING AREAS AND BUILDING ACCESS AREAS CLEAN OF DEBRIS, AND WILL BE RESPONSIBLE FOR ALL MAINTENANCE AND CLEANING OF THESE AREAS DURING THE COURSE OF THE PROJECT.
17. SEPTA REQUIRES ALL PERSONNEL WORKING ON THEIR PROPERTY TO HAVE A SEPTA PHOTO IDENTIFICATION. SEPTA WILL ARRANGE TO HAVE THE IDENTIFICATION CARDS MADE AT THE BEGINNING OF THE CONTRACT AND THROUGHOUT THE DURATION OF THE CONTRACT.
18. SHOULD UNFORESEEN CONDITIONS OR OTHER CAUSES NECESSITATE CONSTRUCTION DETAILS NOT IN ACCORDANCE WITH THESE DRAWINGS, THE CONTRACTOR SHALL NOTIFY THE SEPTA PROJECT MANAGER.
19. IT IS THE CONTRACTOR'S RESPONSIBILITY TO PROCURE AND PAY FOR THE RENTAL EXPENSES AND THE MAINTENANCE OF TRAILERS AND OTHER RENTAL EQUIPMENT FOR THE ENTIRE DURATION OF THE PROJECT. THIS CONSISTS OF BUT IS NOT LIMITED TO ALL LABOR, MATERIAL, EQUIPMENT AND SERVICES REQUIRED.
20. WRITTEN DIMENSIONS ON THE DRAWINGS SHALL TAKE PRECEDENCE, SCALING OF DRAWINGS IS PROHIBITED. LARGE SCALE DRAWINGS SHALL TAKE PRECEDENCE OVER SMALL SCALE DRAWINGS.
21. ALL LUMBER EXPOSED TO THE ELEMENTS OR IN CONTACT WITH MASONRY SHALL BE PRESSURE–TREATED.
22. THE CONTRACTOR IS TO PROTECT ALL AREAS IN SUCH A MANNER AS TO ELIMINATE HAZARDS TO PERSONS AND PROPERTY; TO MINIMIZE INTERFERENCE WITH USE OF ADJACENT AREAS, UTILITIES AND STRUCTURES, OR INTERRUPTION OF USE OF SUCH UTILITIES.
23. IF A CHANGE TO THE PROJECT IS REQUIRED, THE CONTRACTOR IS RESPONSIBLE FOR PROVIDING INFORMATION ABOUT IMPACT OF CHANGE ON CONSTRUCTION SCHEDULE.
24. ALL FINISH COLORS TO BE DETERMINED BY THE SEPTA PROJECT MANAGER.
25. ALL EXISTING CONDITIONS ARE TO BE FIELD–VERIFIED BEFORE COMMENCEMENT OF WORK.
26. ALL NEWLY INSTALLED MATERIALS SHALL BE ASBESTOS–FREE.
27. ALL SPECIFIED MANUFACTURERS AND MODEL NUMBERS INDICATE BASIS OF DESIGN PRODUCTS. PROPOSED ALTERNATES AND EQUIVALENTS MUST BE REVIEWED AND APPROVED BY THE SEPTA PROJECT MANAGER.
28. ALL MATERIALS AND PRODUCTS IN THIS PROJECT MUST COMPLY WITH THE BUY AMERICA ACT.
29. THE CONTRACTOR IS RESPONSIBLE FOR SECURITY OF HIS MATERIAL AND PROPERTY.
30. THE CONTRACTOR IS RESPONSIBLE FOR ALL TEMPORARY UTILITIES.
31. THE CONTRACTOR IS RESPONSIBLE FOR SNOW REMOVAL.
32. CONSTRUCTION/TREATMENTS/ETC AT THE SPECIFIC SITE WILL BE SIMILAR AT ALL OTHER LOCATIONS UNDER THE CONTRACT UNLESS OTHERWISE NOTED.

DEMOLITION NOTES:

1. DO NOT ALLOW DEMOLISHED OR REMOVED MATERIALS TO DROP, FALL OR IMPACT AGAINST STRUCTURES TO REMAIN. PROTECT ALL STRUCTURES TO REMAIN FROM DAMAGE OF ANY KIND.
2. REMOVE ALL DEMOLISHED MATERIAL PROMPTLY FROM SITE.
3. AFTER REMOVAL AND PATCHING OF ELEMENTS, THE FINISHED APPEARANCE SHALL MATCH ADJACENT EXISTING SURFACES AND FINISHES.
4. NO DIGGING OR EXCAVATION MAY TAKE PLACE PRIOR TO PLACING A PA ONE CALL FOR THE ENTIRE PROJECT SITE. IN ADDITION, NO DIGGING OR EXCAVATION MAY TAKE PLACE PRIOR TO THE LOCATING OF NEAR AND ADJACENT BURIED AND OVERHEAD UTILITIES.
5. WORK SITE IS AN ACTIVE TRACTION POWER SUBSTATION (TPSS). FOLLOW ALL SEPTA SAFETY RULES.
6. WORK SHALL BE PERFORMED IN STAGES ACCORDING TO OVERALL CONSTRUCTION STAGING AND SEQUENCING PLAN. SOME WORK MAY ONLY BE PERFORMED DURING POWER OUTAGE.

50% SUBMISSION
NOT FOR CONSTRUCTION

SOUTHEASTERN PENNSYLVANIA TRANSPORTATION AUTHORITY
EM&C DIVISION
1234 MARKET ST, 13TH FL,
PHILADELPHIA, PA 19107

CHIEF ENGINEER - EM&C
CHIEF ENGINEERING OFFICER - B&B
CHIEF RAIL TRANSIT OFFICER
SYSTEM SAFETY
DIRECTOR OF ENGINEERING - B&B
MANAGER - ARCH / ENGINEERING
PROJECT MANAGER

HDR Engineering, Inc.
Philadelphia, PA

SOWINSKI SULLIVAN

REV	DATE	DESCRIPTION	BY	CK'D	APP'D

DATE PRINTED: 10/21/2025

PARK
SUBWAY/ELEVATED TRAINS
TRACTION POWER SUBSTATION REHABILITATION
ARCHITECTURAL
A200 GENERAL NOTES & LEGENDS

SCALE: AS SHOWN	SCALE FACTOR: 1:1
DATE: 08/22/2025	DRAWN BY: AC; CHECKED BY: JH
WORK ORDER NO.: 276482	
SHEET NUMBER: ----	
DWG. NO.: 1 OF 21	
SHT. NO.: 135 OF 452	
ARCHIVE NO.:	
COMPUTER FILE NO.: 17AN-A200	REV. NO.: -

STATUS: 50% SUBMISSION

C:\PW\WORKING\PITTD\17311791\17AN-A200.DWG

ABBREVIATIONS:

ABV	ABOVE
A/C	AIR CONDITIONING
ACST	ACOUSTIC
ADDL	ADDITIONAL
ADA	AMERICANS WITH DISABILITIES ACT
ADJ	ADJACENT
AFF	ABOVE FINISHED FLOOR
AGGR	AGGREGATE
ALUM	ALUMINUM
ALT	ALTERNATE
ANOD	ANODIZED
APPROX	APPROXIMATELY
ARCH	ARCHITECTURAL
ASB	ASBESTOS
ASPH	ASPHALT
ASPHRS	ASPHALT ROOF SHINGLES
ASSN	ASSOCIATION
ASST	ASSISTANT
ASSY	ASSEMBLY
AVE	AVENUE
AVG	AVERAGE
AVPA	AUDIO/VISUAL PUBLIC ADDRESS
BALC	BALCONY
BC	BOTTOM OF CURB
BD	BOARD
BETW	BETWEEN
BLDG	BUILDING
BLK'G	BLOCKING
BLR	BOILER
BM	BEAM
BM	BENCHMARK
BP	BASEPLATE
BRDG	BRIDGING
BRG	BEARING
BS	BOTH SIDES
BSMT	BASEMENT
BTM	BOTTOM
BTU	BRITISH THERMAL UNIT
BTWN	BETWEEN
BUR	BUILT-UP ROOFING
C/C	CENTER TO CENTER
CAB	CABINET
CAP	CAPACITY
CARP	CARPET
CDR	COILING DOOR
CER	CERAMIC TILE
CI	CAST IRON
CIP	CAST IRON PIPE
CIP	CAST-IN-PLACE
CJ	CONTROL JOINT
CL	CENTER LINE
CLG	CEILING
CLR	CLEAR/CLEARANCE
CLOS	CLOSET
CMIU	CONCRETE MASONRY INSULATED UNIT
CMU	CONCRETE MASONRY UNIT
CNCL	CONCEALED
CO	CLEANOUT
CO	COMPANY
COL	COLUMN
COMP	COMPOSITION
CONC	CONCRETE
CONSTR	CONSTRUCTION
CONT	CONTINUOUS
CONTR	CONTRACTOR
CRV	CURVED
CSK	COUNTERSINK
CTD	COATED
CTR	CENTER
CTRL	CONTROL
CUH	CABINET UNIT HEATER
D	DEPTH
DBL	DOUBLE
DEG	DEGREE
DEMO	DEMOLISH/DEMOLITION
DEPT	DEPARTMENT
DIA, ø	DIAMETER
DIAG	DIAGONAL
DIM	DIMENSION
DIST	DISTANCE
DIV	DIVISION
DL	DEAD LOAD
DMPF	DAMPROOFING
DN	DOWN
DPM	DEMOUNTABLE PARTITION MANUFACTURER
DR	DOOR
DS	DOWNSPOUT
DTL	DETAIL
DW	DISHWASHER
DWG	DRAWING
E	EAST
EA	EACH
EF	EXHAUST FAN
EGEN	EMERGENCY GENERATOR
EIFS	EXTERIOR INSULATION & FINISH SYSTEM
EJ	EXPANSION JOINT
ELEV	ELEVATION
ELEV	ELEVATOR
ELEC	ELECTRIC/ELECTRICAL
EMER	EMERGENCY
ENCL	ENCLOSURE
ENG	ENGINEER
ENT	ENTRANCE
EQ	EQUAL
EQUIP	EQUIPMENT
ETC.	ET CETERA
EWC	ELECTRIC WATER COOLER
EXH	EXHAUST
EX	EXISTING
EXIST	EXISTING
EXP	EXPANSION
EXT	EXTERIOR
FAB	FABRICATE
FBD	FIBERBOARD
FD	FLOOR DRAIN
FDR	FIRE DOOR
FE	FIRE EXTINGUISHER
FEC	FIRE EXTINGUISHER & CABINET
FHY	FIRE HYDRANT
FIN	FINISH/FINISHED
FL	FLASHING
FLEX	FLEXIBLE
FLG	FLANGE
FLR	FLOOR
FLRG	FLOORING
FND	FOUNDATION
FNTN	FOUNTAIN
FP	FIREPROOF
FRP	FIBERGLASS REINFORCED PANELING
FRT	FIRE RETARDANT TREATED
FT	FEET/FOOT
FTG	FOOTING
FURN	FURNITURE
FVD	FARE VENDING DEVICE
GA	GAUGE
GAR	GARAGE
GALV	GALVANIZED
GEN	GENERATOR
GFI	GROUND FAULT INTERUPTOR
GL	GLASS
GOVT	GOVERNMENT
GR	GRADE
GRD	GROUND
GSF	GROSS SQUARE FEET
GVL	GRAVEL
GWB	GYPSUM WALLBOARD
GYP	GYPSUM
H	HIGH
HDWE	HARDWARE
HM	HOLLOW METAL
HMD	HOLLOW METAL DOOR
HMI	HUMAN MACHINE INTERFACE
HORIZ	HORIZONTAL
HPT	HIGH POINT
HR	HOUR
HT	HEIGHT
HTR	HEATER
HVAC	HEATING/VENTILATION/AIR CONDITIONING
HWH	HOT WATER HEATER
ID	INSIDE DIAMETER
IE	FOR EXAMPLE
IH	INTAKE HOOD
IN	INCH/INCHES
INCL	INCLUDING
INSUL	INSULATION
INT	INTERIOR
JB	JUNCTION BOX
JST	JOIST
JT	JOINT
LAB	LABORATORY
LAM	LAMINATE
LAV	LAVATORY
LF	LINEAR FEET
LG	LENGTH
LH	LEFT HAND
LIB	LIBRARY
LIN	LINEAR
LL	LIVE LOAD
LLH	LONG LEG HORIZONTAL
LLV	LONG LEG VERTICAL
LPT	LOW POINT
LT	LIGHT
LVL	LEVEL
LWC	LIGHTWEIGHT CONCRETE
MAINT	MAINTENANCE
MANF	MANUFACTURER
MAS	MASONRY
MAT	MATERIAL
MAX	MAXIMUM
MECH	MECHANICAL
MEMB	MEMBRANE
MEZZ	MEZZANINE
MGR	MANAGER
MH	MAN HOLE
MID	MEDIA INFORMATION DISPLAY
MIL	MILITARY
MIN	MINIMUM
MISC	MISCELLANEOUS
ML	METAL LATH
MLDG	MOLDING
MLP	METAL LATH AND PLASTER
MO	MASONRY OPENING
MOD	MODULAR
MOD	MOTOR OPERATED DAMPER
MRL	MACHINE ROOM LESS ELEVATOR
MTG	MOUNTING
MTL	METAL
N	NORTH
N/A	NOT APPLICABLE
N.I.C.	NOT IN CONTRACT
NO.	NUMBER
NOM	NOMINAL
NRC	NOISE-REDUCTION COEFFICIENT
NTS	NOT TO SCALE
OA	OVERALL
OC	ON CENTER
OCC	OCCUPANT
OD	OUTSIDE DIAMETER
OFD	OVERFLOW DRAIN
OFF	OFFICE
OH	OPPOSITE HAND
OHDR	OVERHEAD DOOR
OPNG	OPENING
OPP	OPPOSITE
OSHA	OCCUPATIONAL SAFETY AND HEALTH ADMINISTRATION
OVHD	OVERHEAD
OZ	OUNCE
P/L	PROPERTY LINE
PASS	PASSENGER
PC	PRE-CAST
PERF	PERFORATED
PIM	PERSONS PER INCH PER MINUTE
PIP	POURED-IN-PLACE
PL	PLATE
PLAS	PLASTER
PLBG	PLUMBING
PLYWD	PLYWOOD
PNL	PANEL
PNT	PAINT
PORC	PORCELAIN
PP	PER PERSON
PPM	PERSONS PER MINUTE
PPS	PARKING PAY STATION
PREFAB	PRE-FABRICATED
PR	PAIR
PROJ	PROJECT
PROP	PROPERTY
PROP LN	PROPERTY LINE
PSF	POUNDS PER SQUARE FOOT
PSI	POUNDS PER SQUARE INCH
PT	POINT
PT	PRESSURE TREATED
PTD	PAINTED
PTN	PARTITION
PV	PHOTOVOLTAIC
PVC	POLYVINYL CHLORIDE
QLTY	QUALITY
QTY	QUANTITY
QTF	QUARRY-TILE FLOOR
R	RISER
RAD	RADIUS
RCP	REFLECTED CEILING PLAN
RD	ROOF DRAIN
REBAR	REINFORCING BAR
REF	REFERENCE
REFR	REFRIGERATOR
REG	REGISTER
REINF	REINFORCED
REQ'D	REQUIRED
RET	RETURN
REV	REVISION
RFG	ROOFING
RH	RIGHT HAND
RM	ROOM
RND	ROUND
RO	ROUGH OPENING
ROW	RIGHT OF WAY
RWC	RAIN WATER CONDUCTOR
RWL	RAIN WATER LEADER
RTU	REMOTE TERMINAL UNIT
S	SOUTH
SAPC	SUSPENDED ACOUSTICAL PANEL CEILING
SCHED	SCHEDULE
SDG	SIDING
SECT	SECTION
SF	SQUARE FOOT/FEET
SGFT	STRUCTURAL GLAZED FACING TILE
SH	SHOWER
SHLV	SHELF/SHELVING
SHT	SHEET
SI	INTERNATIONAL SYSTEM OF UNITS
SIM	SIMILAR
SKY	SKYLIGHT
SLDR	SLIDING DOOR
SMLS	SEAMLESS
SPEC	SPECIFICATION
SPKLR	SPRINKLER
SPKR	SPEAKER
SQ	SQUARE
SS	STAINLESS STEEL
ST	STORY
ST	STREET
STD	STANDARD
STOR	STORAGE
STL	STEEL
STRUCT	STRUCTURAL
STWY	STAIRWAY
SUPT	SUPERINTENDENT
SUPVR	SUPERVISOR
SUR	SURFACE
SUSP	SUSPENDED/SUSPENSION
SYS	SYSTEM
T/O	TOP OF
T&B	TOP AND BOTTOM
T&G	TONGUE AND GROOVE
TAN	TANGENT
TC	TOP OF CURB
TDD	TELECOMMUNICATIONS DISPLAY DEVICE
TEL	TELEPHONE
TEMP	TEMPORARY
THERM	THERMAL
THK	THICK/THICKNESS
THRU	THROUGH
TR	TREAD
TRANS	TRANSFORMER
TRTD	TREATED
TYP.	TYPICAL
UNO	UNLESS NOTED OTHERWISE
UTIL	UTILITY
VAT	VINYL ASBESTOS TILE
VCT	VINYL COMPOSITE TILE
VERT	VERTICAL
VIF	VERIFY IN FIELD
VOL	VOLUME
VTR	VENT THRU ROOF
W	WEST
W	WIDE
W/	WITH
W/O	WITHOUT
WBD	WALLBOARD
WC	WATER CLOSET
WD	WOOD
WDR	WATER DOOR
WESS	WAYSIDE ENERGY STORAGE SYSTEM
WH	WATER HEATER
WIN	WINDOW
WT	WIEGHT
WTRPRF	WATERPROOFING
WWF	WELDED WIRE FABRIC
WESS	WAYSIDE ENERGY STORAGE SYSTEM
XFMR	TRANSFORMER
YD	YARD

50% SUBMISSION
NOT FOR CONSTRUCTION

SOUTHEASTERN PENNSYLVANIA TRANSPORTATION AUTHORITY
EM&C DIVISION
1234 MARKET ST, 13TH FL,
PHILADELPHIA, PA 19107

CHIEF ENGINEER - EM&C
CHIEF ENGINEERING OFFICER - B&B
CHIEF RAIL TRANSIT OFFICER
SYSTEM SAFETY
DIRECTOR OF ENGINEERING - B&B
MANAGER - ARCH / ENGINEERING
PROJECT MANAGER

HDR Engineering, Inc.
Philadelphia, PA

SOWINSKI SULLIVAN

REV	DATE	DESCRIPTION	BY	CKD	APD

DATE PRINTED: 10/21/2025

PARK
SUBWAY/ELEVATED TRAINS
TRACTION POWER SUBSTATION REHABILITATION
ARCHITECTURAL
A201 ABBREVIATIONS

SCALE: AS SHOWN	SCALE FACTOR: 1:1
DATE: 08/22/2025	DRAWN BY: AC
	CHECKED BY: ZH
WORK ORDER NO.: 276482	
SHEET NUMBER: ----	
DWG. NO.: 2 OF 21	
SHT. NO.: 136 OF 452	
ARCHIVE NO.:	
COMPUTER FILE NO.: 17AN-A201	REV. NO.: -

STATUS: 50% SUBMISSION

C:\PW\WORKING\PITTIDI\7317178\17AN-A201.DWG

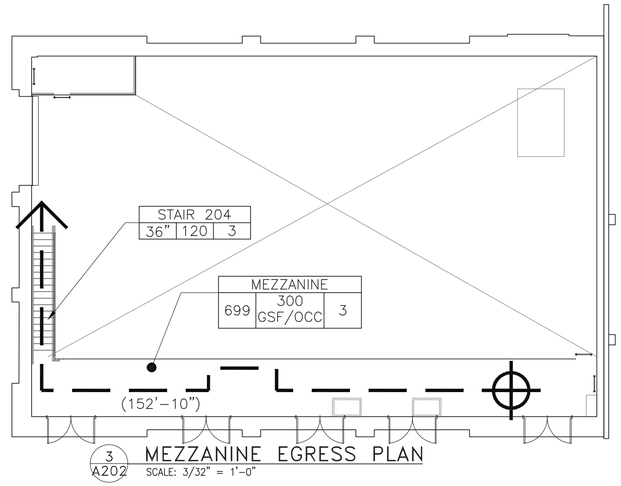

3 A202 MEZZANINE EGRESS PLAN
SCALE: 3/32" = 1'-0"

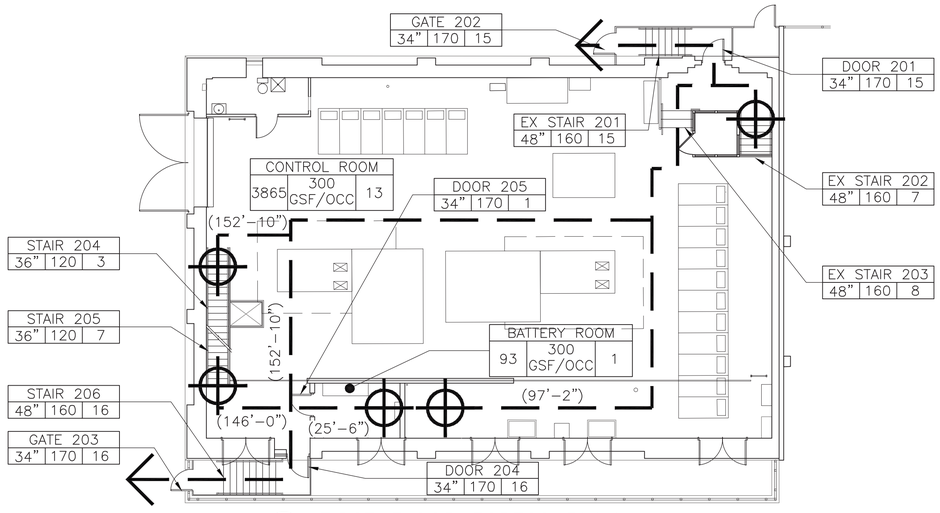

1 A202 FIRST FLOOR EGRESS PLAN
SCALE: 3/32" = 1'-0"

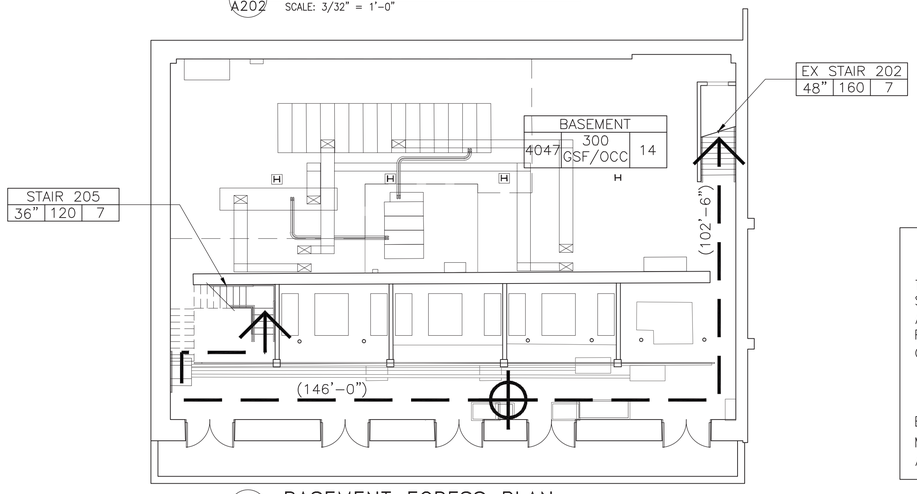

2 A202 BASEMENT EGRESS PLAN
SCALE: 3/32" = 1'-0"

12 8 4 0 12
SCALE: 3/32"=1'-0"

2018 INTERNATIONAL EXISTING BUILDING CODE	
CHAPTER 6 – CLASSIFICATION OF WORK	
603.1	ALTERATION LEVEL 2

2018 INTERNATIONAL BUILDING CODE					
CODE SECTION	SECTION TITLE	CODE REQUIREMENT	EXISTING	PROVIDED	REMARKS
CHAPTER 3 – USE AND OCCUPANCY CRITERIA					
306	USE GROUP	F-1	F-1	F-1	BUILDING IS UNMANNED AND TYPICALLY UNOCCUPIED
CHAPTER 5 – USE AND OCCUPANCY CLASSIFICATION					
TABLES 504.3, 504.4, AND 506.2	HEIGHT/AREA	2 ST (55 FT) 15,500 SF	2 ST (51.5 FT) 8,778 SF	2 ST (51.5 FT) 8,778 SF	
CHAPTER 6 – TYPES OF CONSTRUCTION					
TABLE 601	FIRE RESISTANCE RATING				
	PRIMARY STRUCTURE	IIB	IIB	IIB	
	BEARING WALLS EXTERIOR	0	0	0	
	BEARING WALLS INTERIOR	0	0	0	
	NON-BEARING WALLS EXT.	SEE TABLE 602			
	NON-BEARING WALLS INT.	0	0	0	
	FLOOR CONSTRUCTION	0	0	0	
	ROOF CONSTRUCTION	0	0	0	
CHAPTER 7 – FIRE AND SMOKE PROTECTION FEATURES					
713.4	SHAFT ENCLOSURE, LESS THAN 4 STORIES	1 HOUR RATED	N/A	N/A	
CHAPTER 8 – INTERIOR FINISHES					
TABLE 803.13	INTERIOR WALL AND CEILING FINISHES (NOT SPRINKLERED)				
	ROOMS AND ENCLOSED SPACES	CLASS C	N/A	CLASS C	
	CORRIDORS	CLASS C	N/A	CLASS C	
	EXIT PASSAGEWAYS	CLASS B	N/A	CLASS B	
CHAPTER 9 – FIRE PROTECTION SYSTEMS					
903.2.4	GROUP F-1				
	AREA EXCEEDS FIRE AREA LOCATED MORE THAN 3 STORIES ABOVE GRADE	12,000 SF 3 STORIES	8,778 SF 2 STORY	8,778 SF 2 STORY	
	COMBINED FIRE AREA	24,000 SF	8,778 SF	8,778 SF	
CHAPTER 10 – MEANS OF EGRESS					
TABLE 1004.5	OCCUPANT LOAD				
	ACCESSORY STORAGE AREA/ MECHANICAL EQUIPMENT ROOM	300 SF/PER PERSON	31 PERSONS	31 PERSONS	
1005.3	MINIMUM REQUIRED EGRESS WIDTH				
	STAIRS	0.3" PER PERSON	34"	68"	
	OTHER EGRESS COMPONENTS	0.2" PER PERSON	48"	78"	
NOTE 1. AUTOMATIC SPRINKLER SYSTEM NOT REQUIRED IF ALL THREE CRITERIA ARE MET PER 903.2.4. 2. AUTOMATIC SPRINKLER SYSTEM IS NOT REQUIRED. 3. BUILDING IS UNMANNED AND TYPICALLY UNOCCUPIED.					

2018 – INTERNATIONAL PLUMBING CODE					
CODE SECTION	SECTION TITLE	CODE REQUIREMENT	EXISTING	PROVIDED	REMARKS
TABLE 403.1	MINIMUM NUMBER OF PLUMBING FIXTURES				
	WATER CLOSET (MALE/FEMALE)	1 PER 100 PERSONS=1	1	1	
	LAVATORY (MALE/FEMALE)	1 PER 100 PERSONS=1	1	1	
	INKING FOUNTAIN	1 PER 400 PERSONS=1	1	1	EXISTING WATER COOLER
	SERVICE SINK	1 PER 100 PERSONS=1	1	1	
NOTE 1. BUILDING IS UNMANNED AND TYPICALLY UNOCCUPIED.					

EGRESS LEGEND

NAME OF SPACE
TOTAL SQUARE FEET
AREA REQUIRED PER OCCUPANT
OCCUPANT LOAD

DOOR/STAIR #
EGRESS WIDTH
MAX. OCCUPANT LOAD
ACTUAL OCCUPANTS

— — —	PRIMARY PATH OF EGRESS TRAVEL
(X'-XX")	EGRESS TRAVEL DISTANCE
⊕	EGRESS PATH ORIGIN

PATH OF EGRESS

50% SUBMISSION
NOT FOR CONSTRUCTION

C:\PW\WORKING\PITTD\17317917AN-A202.DWG

SOUTHEASTERN PENNSYLVANIA TRANSPORTATION AUTHORITY
EM&C DIVISION
1234 MARKET ST, 13TH FL,
PHILADELPHIA, PA 19107

CHIEF ENGINEER - EM&C
CHIEF ENGINEERING OFFICER - B&B
CHIEF RAIL TRANSIT OFFICER
SYSTEM SAFETY
DIRECTOR OF ENGINEERING - B&B
MANAGER - ARCH / ENGINEERING
PROJECT MANAGER

HDR Engineering, Inc.
Philadelphia, PA

SOWINSKI SULLIVAN

REV	DATE	DESCRIPTION	BY	CK'D	APP'D

DATE PRINTED: 10/21/2025

PARK
SUBWAY/ELEVATED TRAINS
TRACTION POWER SUBSTATION REHABILITATION
ARCHITECTURAL
CODE DATA

SCALE: AS SHOWN	SCALE FACTOR: 1:1
DATE: 08/22/2025	DRAWN BY: AC
	CHECKED BY: JH
WORK ORDER NO.: 276482	
SHEET NUMBER: **A202**	
DWG. NO.: 3 OF 21	
SHT. NO.: 137 OF 448	
ARCHIVE NO.:	
COMPUTER FILE NO.: 17AN-A202	REV. NO.: -

STATUS: 50% SUBMISSION

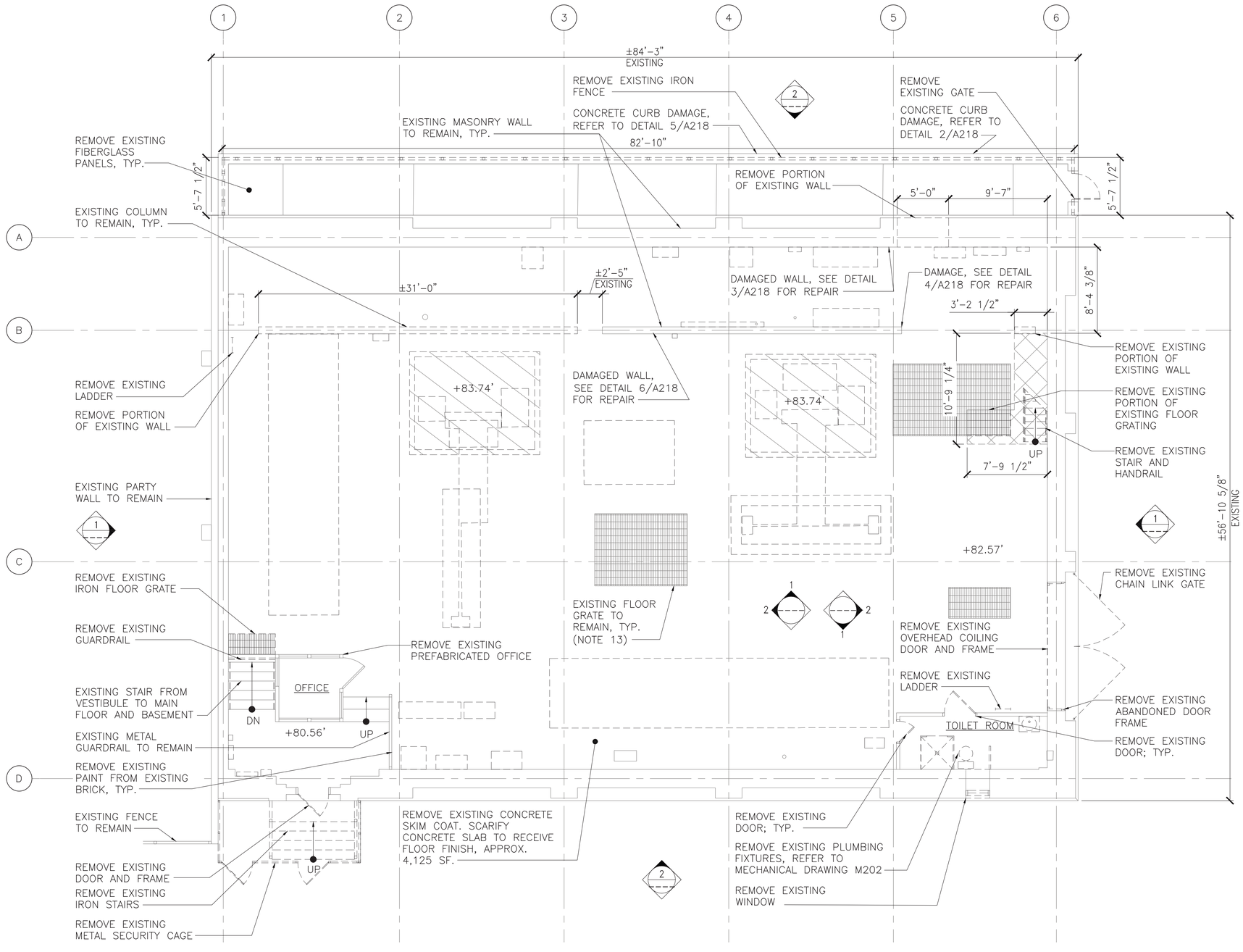

1 FIRST FLOOR REMOVAL PLAN
SCALE: 3/16" = 1'-0"

NOTES:

1. ALL CONDITIONS ARE EXISTING UNLESS NOTED OTHERWISE, TYPICAL.
2. ALL EXISTING DIMENSIONS SHALL BE VERIFIED IN FIELD, TYPICAL.
3. DRAWINGS INDICATE THE VARIOUS TYPES OF REPAIRS REQUIRED AT THE MOST SEVERE LOCATIONS. DRAWINGS SHOW THE INTENT OF THE SCOPE OF WORK BUT DO NOT INCLUDE EVERY SMALL AREA REQUIRING REPAIR, RESTORATION OR REFINISH.
4. WORK SITE IS AN ACTIVE TRACTION POWER SUBSTATION (TPSS). FOLLOW ALL SEPTA SAFETY RULES.
5. WORK SHALL BE PERFORMED IN STAGES ACCORDING TO OVERALL CONSTRUCTION STAGING AND SEQUENCING PLAN. SOME WORK MAY ONLY BE PERFORMED DURING POWER OUTAGE.
6. FLOOR WILL BE MADE AVAILABLE IN STAGES AS THE EXISTING EQUIPMENT IS REMOVED PER OVERALL CONSTRUCTION STAGING AND SEQUENCING PLAN.
7. LEVEL EXISTING BASEMENT FLOOR. REMOVE ALL CURBS, HOUSEKEEPING PADS, AND ELEVATED FLOOR AREAS INDICATED. FLOOR SHALL BE LEVEL WITH ADJACENT EXISTING FLOOR AT ELEVATION 82.57'. FLOOR AREA TO BE LEVELED IS APPROXIMATELY 278.5 SQUARE FEET. REFER TO STRUCTURAL DRAWINGS.
8. REMOVE APPROXIMATELY 32.5 SQUARE FEET OF FLOOR AT NORTHWEST CORNER. REFER TO STRUCTURAL DRAWINGS.
9. SEAL ALL ABANDONED PENETRATIONS PER DETAIL 5/A219.
10. REPAIR ALL ACTIVE PENETRATIONS PER DETAIL 6/A219.
11. REMOVE EXISTING LIGHT FIXTURES, REFER TO ELECTRICAL DRAWING E205, TYPICAL.
12. REMOVE ALL TRACTION POWER EQUIPMENT. REFER TO TRACTION POWER DRAWINGS TP211 THROUGH TP219, TYPICAL.
13. THE CONTRACTOR TO PROVIDE A DESIGN FOR A REDUCED SIZE GRATE IN ORDER FOR THE INSTALLATION OF NEW RECTIFIER TRANSFORMER SET #1 AND INSULATED FLOOR COVERING.

LEGEND

- AREA OF FLOOR TO BE REMOVED, APPROX. 45 SF.
- AREA OF FLOOR TO BE LOWERED, APPROX. 275 SF.

6 4 2 0 6
SCALE: 3/16"=1'0"

50% SUBMISSION
NOT FOR CONSTRUCTION

SOUTHEASTERN PENNSYLVANIA TRANSPORTATION AUTHORITY
EM&C DIVISION
1234 MARKET ST, 13TH FL, PHILADELPHIA, PA 19107

CHIEF ENGINEER - EM&C
CHIEF ENGINEERING OFFICER - B&B
CHIEF RAIL TRANSIT OFFICER
SYSTEM SAFETY
DIRECTOR OF ENGINEERING - B&B
MANAGER - ARCH / ENGINEERING
PROJECT MANAGER

HDR Engineering, Inc.
Philadelphia, PA

SOWINSKI SULLIVAN

REV	DATE	DESCRIPTION	BY	CKD	APD

DATE PRINTED: 10/21/2025

PARK
SUBWAY/ELEVATED TRAINS
TRACTION POWER SUBSTATION REHABILITATION
ARCHITECTURAL
A203 GROUND FLOOR REMOVAL PLAN

SCALE: AS SHOWN	SCALE FACTOR: 1:1
DATE: 08/22/2025	DRAWN BY: AC
	CHECKED BY: ZH
WORK ORDER NO.: 276482	
SHEET NUMBER: ----	
DWG. NO.: 4 OF 21	
SHT. NO.: 138 OF 453	
ARCHIVE NO.:	
COMPUTER FILE NO.: 17AN-A203	REV. NO.: -

STATUS: 50% SUBMISSION

C:\PW\WORKING\PITTD\T73117917AN-A203.DWG

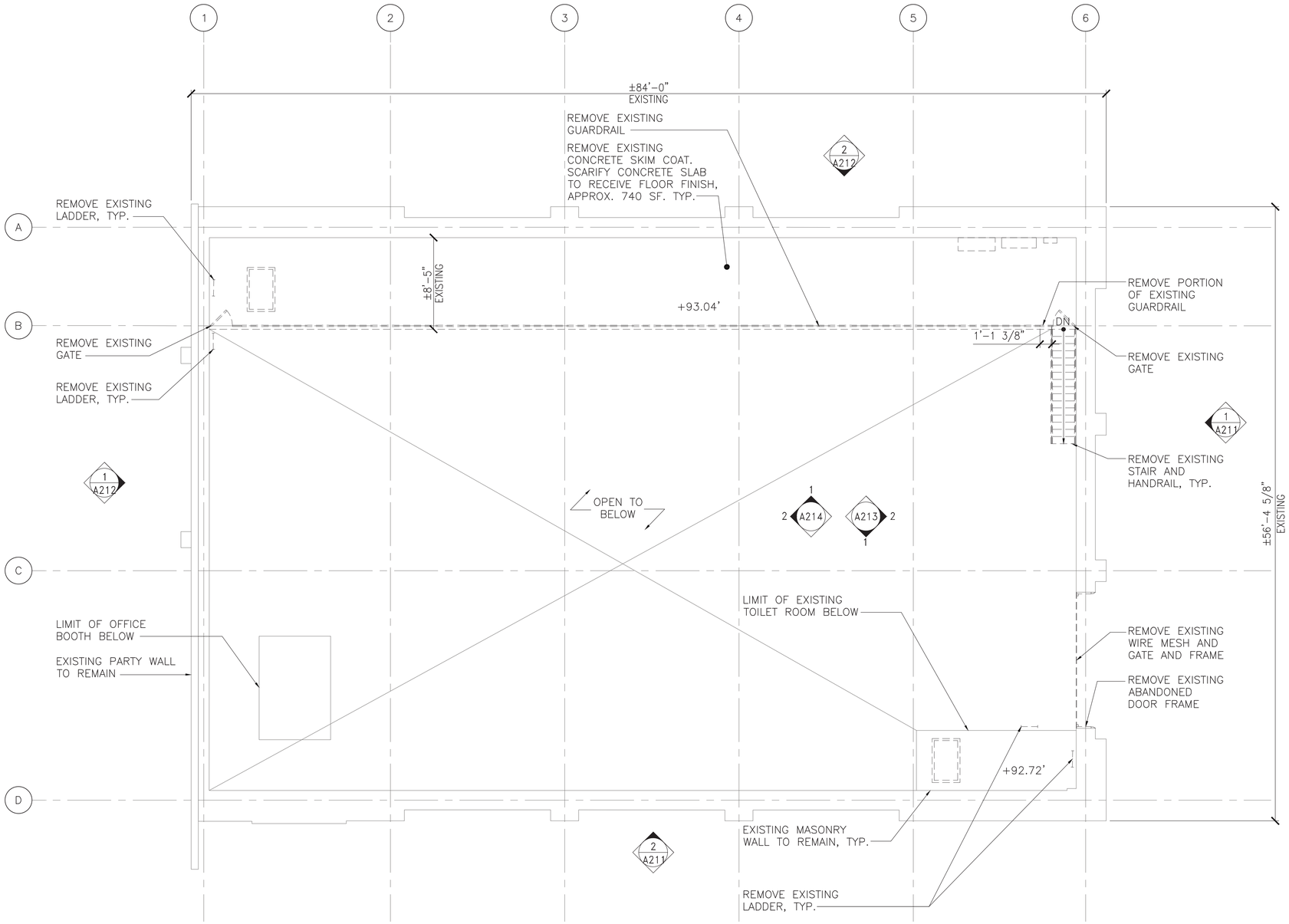

1 A204 MEZZANINE REMOVAL FLOOR PLAN
SCALE: 3/16" = 1'-0"

NOTES:

1. ALL CONDITIONS ARE EXISTING UNLESS NOTED OTHERWISE, TYPICAL.
2. ALL EXISTING DIMENSIONS SHALL BE VERIFIED IN FIELD, TYPICAL.
3. DRAWINGS INDICATE THE VARIOUS TYPES OF REPAIRS REQUIRED AT THE MOST SEVERE LOCATIONS. DRAWINGS SHOW THE INTENT OF THE SCOPE OF WORK BUT DO NOT INCLUDE EVERY SMALL AREA REQUIRING REPAIR, RESTORATION OR REFINISH.
4. WORK SITE IS AN ACTIVE TRACTION POWER SUBSTATION (TPSS). FOLLOW ALL SEPTA SAFETY RULES.
5. WORK SHALL BE PERFORMED IN STAGES ACCORDING TO OVERALL CONSTRUCTION STAGING AND SEQUENCING PLAN. SOME WORK MAY ONLY BE PERFORMED DURING POWER OUTAGE.
6. FLOOR WILL BE MADE AVAILABLE IN STAGES AS THE EXISTING EQUIPMENT IS REMOVED PER OVERALL CONSTRUCTION STAGING AND SEQUENCING PLAN.
7. SEAL ALL ABANDONED PENETRATIONS PER DETAIL 5/A219.
8. REPAIR ALL ACTIVE PENETRATIONS PER DETAIL 6/A219.
9. REMOVE EXISTING LIGHT FIXTURES, REFER TO ELECTRICAL DRAWING E206, TYPICAL.
10. REMOVE ALL EXISTING TRACTION POWER EQUIPMENT. REFER TO TRACTION POWER DRAWINGS TP211 THROUGH TP219, TYPICAL.

6 4 2 0 6
SCALE: 3/16"=1'0"

50% SUBMISSION
NOT FOR CONSTRUCTION

SOUTHEASTERN PENNSYLVANIA TRANSPORTATION AUTHORITY
EM&C DIVISION
1234 MARKET ST, 13TH FL,
PHILADELPHIA, PA 19107

CHIEF ENGINEER - EM&C
CHIEF ENGINEERING OFFICER - B&B
CHIEF RAIL TRANSIT OFFICER
SYSTEM SAFETY
DIRECTOR OF ENGINEERING - B&B
MANAGER - ARCH / ENGINEERING
PROJECT MANAGER

HDR Engineering, Inc.
Philadelphia, PA

SOWINSKI SULLIVAN

REV	DATE	DESCRIPTION	BY	CK'D	APD

DATE PRINTED: 10/21/2025

PARK
SUBWAY/ELEVATED TRAINS
TRACTION POWER SUBSTATION REHABILITATION
ARCHITECTURAL
MEZZANINE REMOVAL FLOOR PLAN

SCALE: AS SHOWN	SCALE FACTOR: 1:1
DATE: 08/22/2025	DRAWN BY: AC
	CHECKED BY: JH
WORK ORDER NO.: 276482	
SHEET NUMBER: **A204**	
DWG. NO.: 5 OF 21	
SHT. NO.: 139 OF 448	
ARCHIVE NO.:	
COMPUTER FILE NO.: 17AN-A204	REV. NO.: -

STATUS: 50% SUBMISSION

C:\PW\WORKING\PITTD\7311791\17AN-A204.DWG

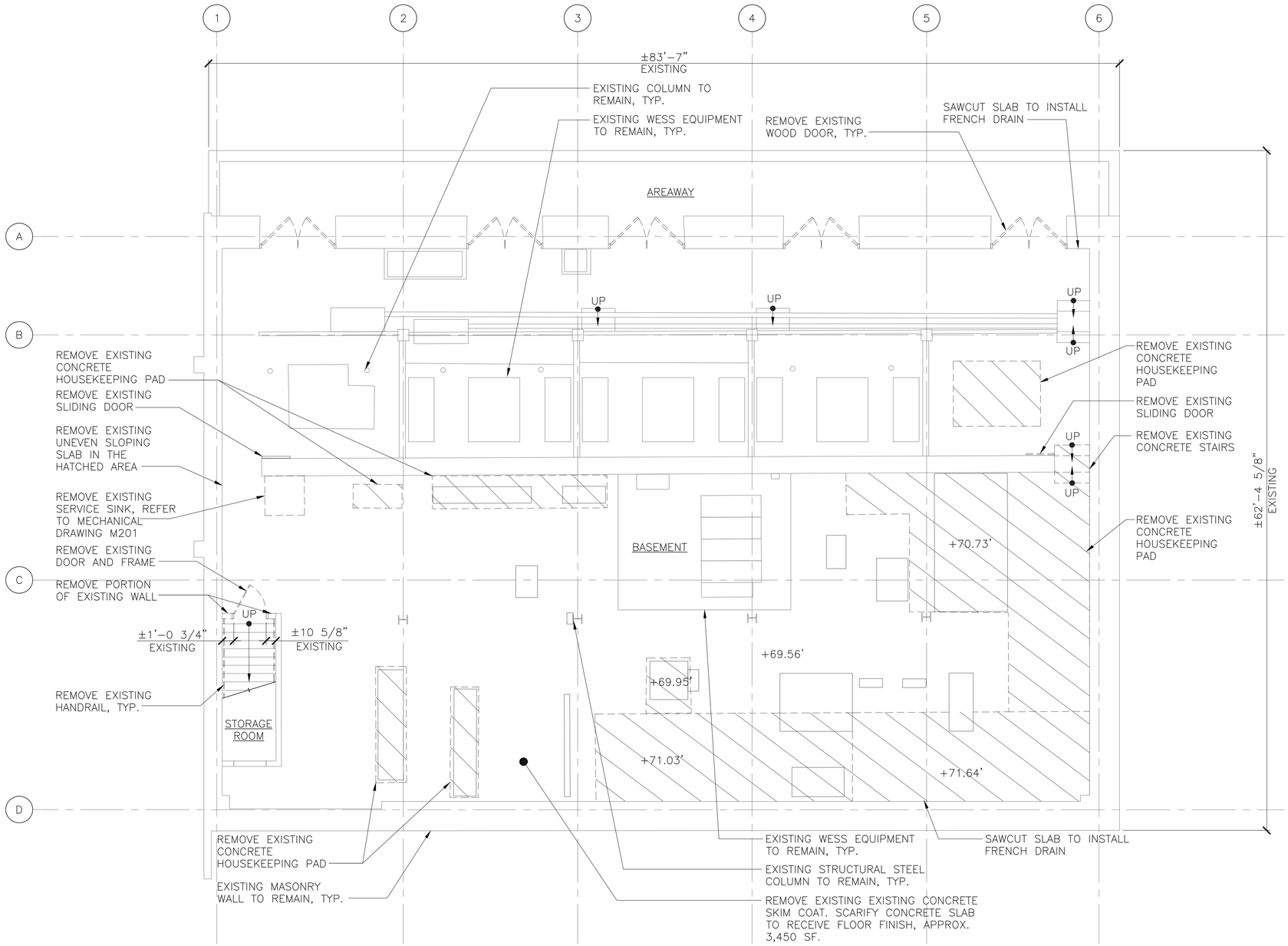

1 A205 BASEMENT REMOVAL PLAN
SCALE: 3/16" = 1'-0"

NOTES:

1. ALL CONDITIONS ARE EXISTING UNLESS NOTED OTHERWISE, TYPICAL.
2. ALL EXISTING DIMENSIONS SHALL BE VERIFIED IN FIELD, TYPICAL.
3. DRAWINGS INDICATE THE VARIOUS TYPES OF REPAIRS REQUIRED AT THE MOST SEVERE LOCATIONS. DRAWINGS SHOW THE INTENT OF THE SCOPE OF WORK BUT DO NOT INCLUDE EVERY SMALL AREA REQUIRING REPAIR, RESTORATION OR REFINISH.
4. WORK SITE IS AN ACTIVE TRACTION POWER SUBSTATION (TPSS). FOLLOW ALL SEPTA SAFETY RULES.
5. WORK SHALL BE PERFORMED IN STAGES ACCORDING TO OVERALL CONSTRUCTION STAGING AND SEQUENCING PLAN. SOME WORK MAY ONLY BE PERFORMED DURING POWER OUTAGE.
6. FLOOR WILL BE MADE AVAILABLE IN STAGES AS THE EXISTING EQUIPMENT IS REMOVED PER OVERALL CONSTRUCTION STAGING AND SEQUENCING PLAN.
7. REMOVE EXISTING LIGHT FIXTURES, REFER TO ELECTRICAL DRAWING E204, TYPICAL.
8. LEVEL EXISTING BASEMENT FLOOR. REMOVE ALL CURBS, HOUSEKEEPING PADS, AND ELEVATED FLOOR AREAS INDICATED. FLOOR SHALL BE LEVEL WITH ADJACENT EXISTING FLOOR AT ELEVATION 69.56'. FLOOR AREA TO BE LEVELED IS APPROXIMATELY 932 SQUARE FEET. REFER TO STRUCTURAL DRAWINGS.
9. SEAL ALL ABANDONED PENETRATIONS PER DETAIL 5/A219 ALL ACTIVE PENETRATIONS PER DETAIL
10. REPAIR ALL ACTIVE PENETRATIONS PER DETAIL 6/A219.
11. REMOVE ALL EXISTING TRACTION POWER EQUIPMENT. REFER TO TRACTION POWER DRAWINGS TP211 THROUGH TP219, TYPICAL.

LEGEND

AREA OF FLOOR TO BE LOWERED, APPROX. 1000 SF.

6 4 2 0 6
SCALE: 3/16"=1'0"

50% SUBMISSION
NOT FOR CONSTRUCTION

SOUTHEASTERN PENNSYLVANIA TRANSPORTATION AUTHORITY
EM&C DIVISION
1234 MARKET ST, 13TH FL,
PHILADELPHIA, PA 19107

CHIEF ENGINEER - EM&C
CHIEF ENGINEERING OFFICER - B&B
CHIEF RAIL TRANSIT OFFICER
SYSTEM SAFETY
DIRECTOR OF ENGINEERING - B&B
MANAGER - ARCH / ENGINEERING
PROJECT MANAGER

HDR Engineering, Inc.
Philadelphia, PA
SOWINSKI SULLIVAN

REV	DATE	DESCRIPTION	BY	CK'D	APP'D

DATE PRINTED: 10/21/2025

PARK
SUBWAY/ELEVATED TRAINS
TRACTION POWER SUBSTATION REHABILITATION
ARCHITECTURAL
BASEMENT REMOVAL PLAN

SCALE: AS SHOWN	SCALE FACTOR: 1:1
DATE: 08/22/2025	DRAWN BY: AC
	CHECKED BY: ZH
WORK ORDER NO.: 276482	
SHEET NUMBER: **A205**	
DWG. NO.: 6 OF 21	
SHT. NO.: 140 OF 448	
ARCHIVE NO.:	
COMPUTER FILE NO.: 17AN-A205	REV. NO.: -

STATUS: 50% SUBMISSION

C:\PW\WORKING\PITTD\7317917\17AN-A205.DWG

NOTES:

1. ALL CONDITIONS ARE EXISTING UNLESS NOTED OTHERWISE, TYPICAL.
2. ALL EXISTING DIMENSIONS SHALL BE VERIFIED IN FIELD, TYPICAL.
3. DRAWINGS INDICATE THE VARIOUS TYPES OF REPAIRS REQUIRED AT THE MOST SEVERE LOCATIONS. DRAWINGS SHOW THE INTENT OF THE SCOPE OF WORK BUT DO NOT INCLUDE EVERY SMALL AREA REQUIRING REPAIR, RESTORATION OR REFINISH.
4. WORK SITE IS AN ACTIVE TRACTION POWER SUBSTATION (TPSS). FOLLOW ALL SEPTA SAFETY RULES.
5. WORK SHALL BE PERFORMED IN STAGES ACCORDING TO OVERALL CONSTRUCTION STAGING AND SEQUENCING PLAN. SOME WORK MAY ONLY BE PERFORMED DURING POWER OUTAGE.

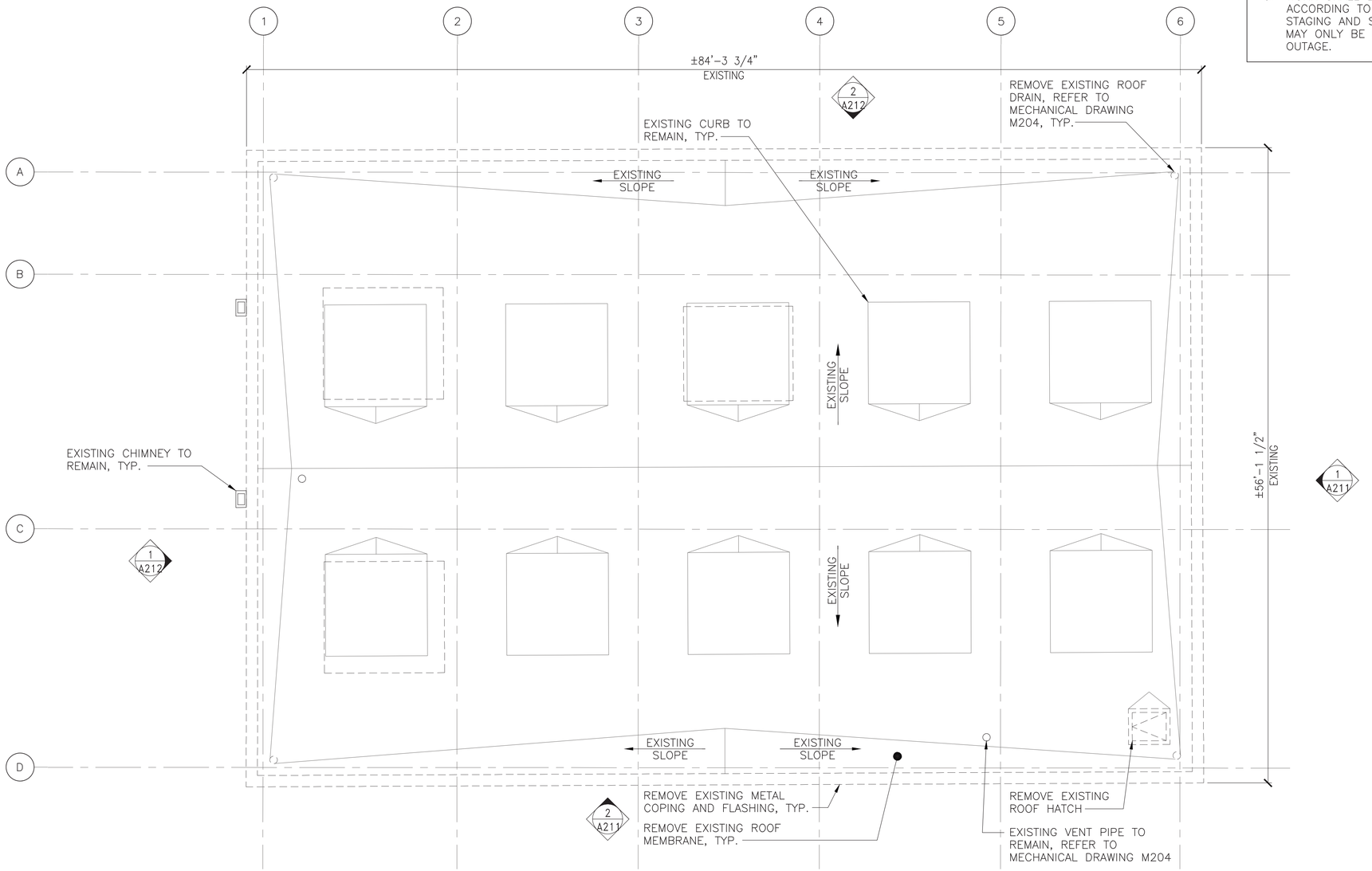

1 ROOF REMOVAL PLAN
SCALE: 3/16" = 1'-0"

6 4 2 0 6
SCALE: 3/16"=1'0"

50% SUBMISSION
NOT FOR CONSTRUCTION

SOUTHEASTERN PENNSYLVANIA TRANSPORTATION AUTHORITY
EM&C DIVISION
1234 MARKET ST, 13TH FL, PHILADELPHIA, PA 19107

CHIEF ENGINEER - EM&C
CHIEF ENGINEERING OFFICER - B&B
CHIEF RAIL TRANSIT OFFICER
SYSTEM SAFETY
DIRECTOR OF ENGINEERING - B&B
MANAGER - ARCH / ENGINEERING
PROJECT MANAGER

HDR Engineering, Inc.
Philadelphia, PA

SOWINSKI SULLIVAN

REV	DATE	DESCRIPTION	BY	CK'D	APP'D

DATE PRINTED: 10/21/2025

PARK
SUBWAY/ELEVATED TRAINS
TRACTION POWER SUBSTATION
REHABILITATION
ARCHITECTURAL
A206 ROOF REMOVAL PLAN

SCALE: AS SHOWN
SCALE FACTOR: 1:1
DATE: 08/22/2025
DRAWN BY: AC
CHECKED BY: ZH
WORK ORDER NO.: 276482
SHEET NUMBER: ----
DWG. NO.: 7 OF 21
SHT. NO.: 141 OF 448
ARCHIVE NO.:
COMPUTER FILE NO.: 17AN-A206
REV. NO.: -

STATUS: 50% SUBMISSION

C:\PWWORKING\PITT\D1731179\17AN-A206.DWG

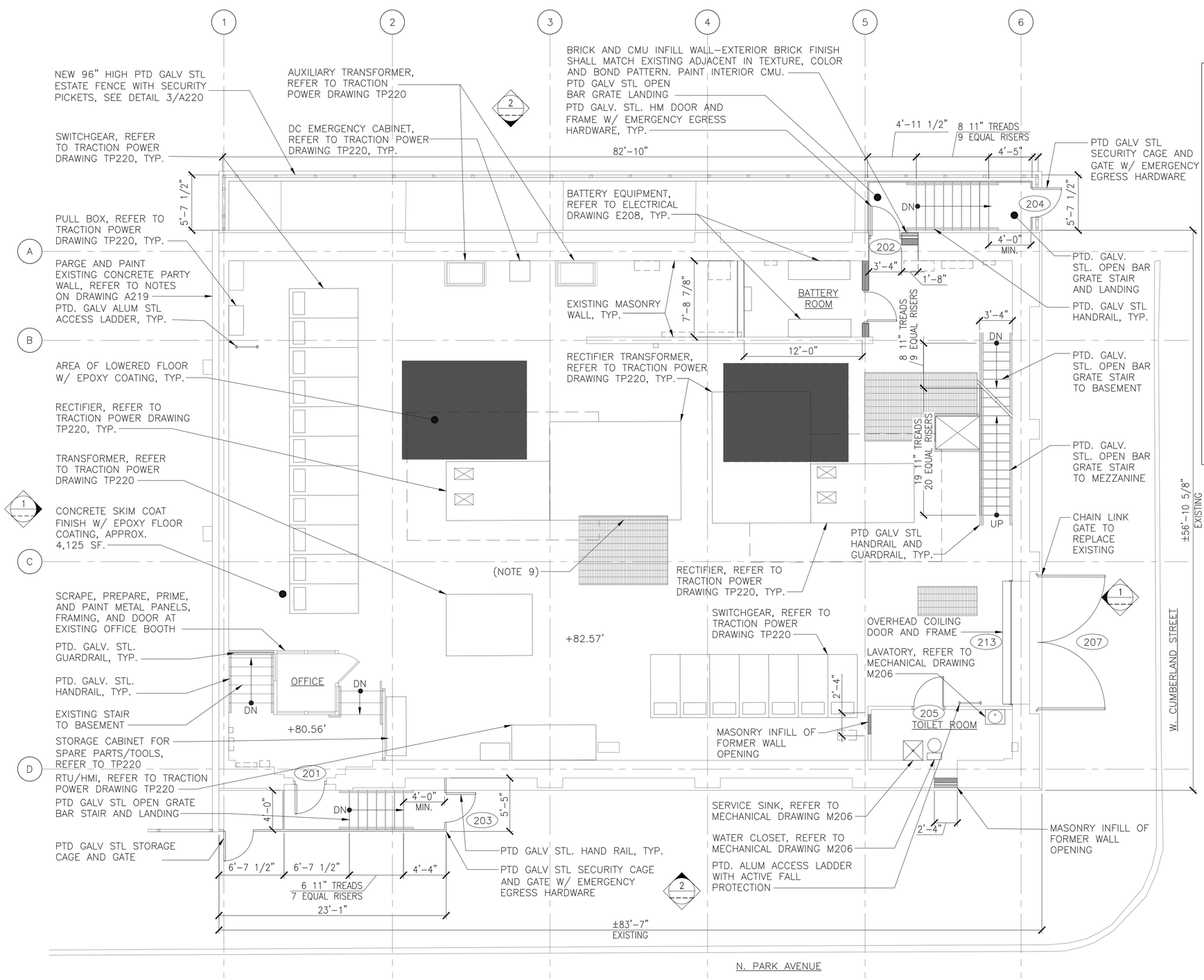

NOTES:

1. ALL CONDITIONS ARE EXISTING UNLESS NOTED OTHERWISE, TYPICAL.
2. ALL EXISTING DIMENSIONS SHALL BE VERIFIED IN FIELD, TYPICAL.
3. DRAWINGS INDICATE THE VARIOUS TYPES OF REPAIRS REQUIRED AT THE MOST SEVERE LOCATIONS. DRAWINGS SHOW THE INTENT OF THE SCOPE OF WORK BUT DO NOT INCLUDE EVERY SMALL AREA REQUIRING REPAIR, RESTORATION OR REFINISH.
4. WORK SITE IS AN ACTIVE TRACTION POWER SUBSTATION (TPSS). FOLLOW ALL SEPTA SAFETY RULES.
5. WORK SHALL BE PERFORMED IN STAGING ACCORDING TO OVERALL CONSTRUCTION STAGING AND SEQUENCING PLAN. SOME WORK MAY ONLY BE PERFORMED DURING POWER OUTAGE.
6. FLOOR WILL BE MADE AVAILABLE IN STAGES AS THE EXISTING EQUIPMENT IS REMOVED PER OVERALL CONSTRUCTION STAGING AND SEQUENCING PLAN.
7. SCRAPE, PREPARE, PRIME, AND PAINT ENTIRE SURFACE OF EXISTING CONCRETE CEILING AND ALL CONCRETE BEAMS
8. SCRAPE, PREPARE, PRIME AND PAINT ALL EXTERNAL STRUCTURAL STEEL FRAMING, TYP.
9. THE CONTRACTOR TO PROVIDE A DESIGN FOR A REDUCED SIZE GRATE IN ORDER FOR THE INSTALLATION OF NEW RECTIFIER TRANSFORMER SET #1 AND INSULATED FLOOR COVERING.
10. ALL LADDER ARE TO COMPLY WITH REQUIREMENTS PER OSHA 1910.23, TYPICAL.

1 FIRST FLOOR PLAN
SCALE: 3/16" = 1'–0"

6 4 2 0 6
SCALE: 3/16"=1'0"

50% SUBMISSION
NOT FOR CONSTRUCTION

SOUTHEASTERN PENNSYLVANIA TRANSPORTATION AUTHORITY
EM&C DIVISION
1234 MARKET ST, 13TH FL.
PHILADELPHIA, PA 19107

CHIEF ENGINEER - EM&C
CHIEF ENGINEERING OFFICER - B&B
CHIEF RAIL TRANSIT OFFICER
SYSTEM SAFETY
DIRECTOR OF ENGINEERING - B&B
MANAGER - ARCH / ENGINEERING
PROJECT MANAGER

HDR Engineering, Inc.
Philadelphia, PA

SOWINSKI SULLIVAN

REV	DATE	DESCRIPTION	BY	CKD	APD

DATE PRINTED: 10/21/2025

PARK
SUBWAY/ELEVATED TRAINS
TRACTION POWER SUBSTATION REHABILITATION
ARCHITECTURAL
A207 GROUND FLOOR PLAN

SCALE: AS SHOWN	SCALE FACTOR: 1:1
DATE: 08/22/2025	DRAWN BY: AC
	CHECKED BY: JH
WORK ORDER NO.: 276482	
SHEET NUMBER: - - - -	
DWG. NO.: 8 OF 21	
SHT. NO.: 142 OF 452	
ARCHIVE NO.:	
COMPUTER FILE NO.: 17AN-A207	REV. NO.: -

STATUS: 50% SUBMISSION

C:\PW\WORKING\PITTD\17317917\17AN-A207.DWG

NOTES:

1. ALL CONDITIONS ARE EXISTING UNLESS NOTED OTHERWISE, TYPICAL.
2. ALL EXISTING DIMENSIONS SHALL BE VERIFIED IN FIELD, TYPICAL.
3. DRAWINGS INDICATE THE VARIOUS TYPES OF REPAIRS REQUIRED AT THE MOST SEVERE LOCATIONS. DRAWINGS SHOW THE INTENT OF THE SCOPE OF WORK BUT DO NOT INCLUDE EVERY SMALL AREA REQUIRING REPAIR, RESTORATION OR REFINISH.
4. WORK SITE IS AN ACTIVE TRACTION POWER SUBSTATION (TPSS). FOLLOW ALL SEPTA SAFETY RULES.
5. WORK SHALL BE PERFORMED IN STAGES ACCORDING TO OVERALL CONSTRUCTION STAGING AND SEQUENCING PLAN. SOME WORK MAY ONLY BE PERFORMED DURING POWER OUTAGE.
7. SCRAPE, PREPARE, PRIME, AND PAINT ENTIRE SURFACE OF EXISTING CONCRETE CEILING AND ALL CONCRETE BEAMS
8. SCRAPE, PREPARE, PRIME AND PAINT ALL EXTERNAL STRUCTURAL STEEL FRAMING, TYPICAL.

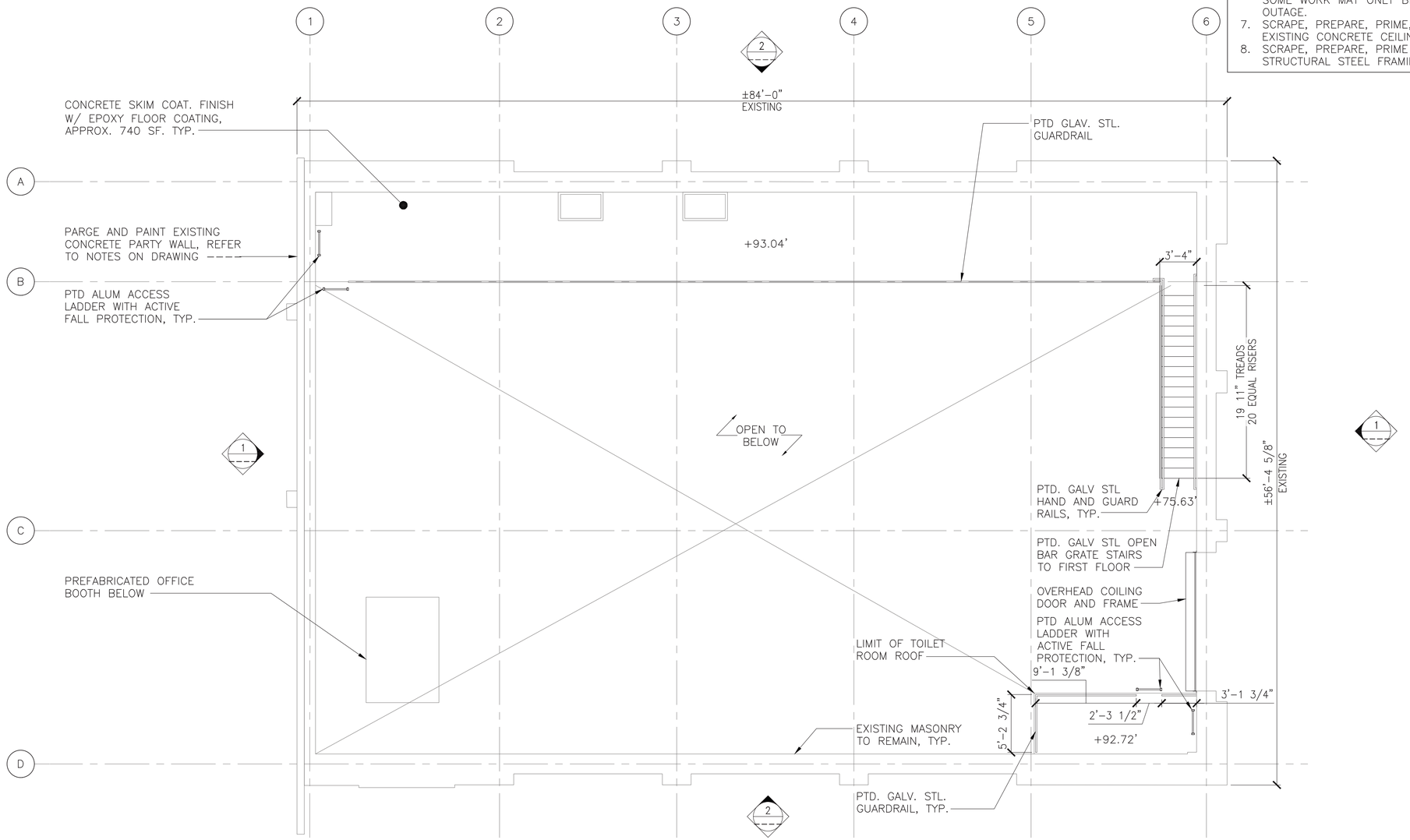

1 MEZZANINE FLOOR PLAN
SCALE: 3/16" = 1'–0"

6 4 2 0 6
SCALE: 3/16"=1'0"

50% SUBMISSION
NOT FOR CONSTRUCTION

SOUTHEASTERN PENNSYLVANIA TRANSPORTATION AUTHORITY
EM&C DIVISION
1234 MARKET ST, 13TH FL, PHILADELPHIA, PA 19107

CHIEF ENGINEER - EM&C
CHIEF ENGINEERING OFFICER - B&B
CHIEF RAIL TRANSIT OFFICER
SYSTEM SAFETY
DIRECTOR OF ENGINEERING - B&B
MANAGER - ARCH / ENGINEERING
PROJECT MANAGER

HDR Engineering, Inc.
Philadelphia, PA
SOWINSKI SULLIVAN

REV	DATE	DESCRIPTION	BY	CK'D	APP'D

DATE PRINTED: 10/21/2025

PARK
SUBWAY/ELEVATED TRAINS
TRACTION POWER SUBSTATION REHABILITATION
ARCHITECTURAL
A208 MEZZANINE FLOOR PLAN

SCALE: AS SHOWN	SCALE FACTOR: 1:1
DATE: 08/22/2025	DRAWN BY: AC
	CHECKED BY: ZH
WORK ORDER NO.: 276482	
SHEET NUMBER: ----	
DWG. NO.: 9 OF 21	
SHT. NO.: 143 OF 452	
ARCHIVE NO.:	
COMPUTER FILE NO.: 17AN-A208	REV. NO.: -

STATUS: 50% SUBMISSION

C:\PW_WORKING\PITTIDI\73117\917AN-A208.DWG

NOTES:

1. ALL CONDITIONS ARE EXISTING UNLESS NOTED OTHERWISE, TYPICAL.
2. ALL EXISTING DIMENSIONS SHALL BE VERIFIED IN FIELD, TYPICAL.
3. DRAWINGS INDICATE THE VARIOUS TYPES OF REPAIRS REQUIRED AT THE MOST SEVERE LOCATIONS. DRAWINGS SHOW THE INTENT OF THE SCOPE OF WORK BUT DO NOT INCLUDE EVERY SMALL AREA REQUIRING REPAIR, RESTORATION OR REFINISH.
4. WORK SITE IS AN ACTIVE TRACTION POWER SUBSTATION (TPSS). FOLLOW ALL SEPTA SAFETY RULES.
5. WORK SHALL BE PERFORMED IN STAGES ACCORDING TO OVERALL CONSTRUCTION STAGING AND SEQUENCING PLAN. SOME WORK MAY ONLY BE PERFORMED DURING POWER OUTAGE.
6. FLOOR WILL BE MADE AVAILABLE IN STAGES AS THE EXISTING EQUIPMENT IS REMOVED PER OVERALL CONSTRUCTION STAGING AND SEQUENCING PLAN.
7. SCRAPE, PREPARE, PRIME, AND PAINT ENTIRE SURFACE OF CONCRETE CEILING AND CONCRETE BEAMS.

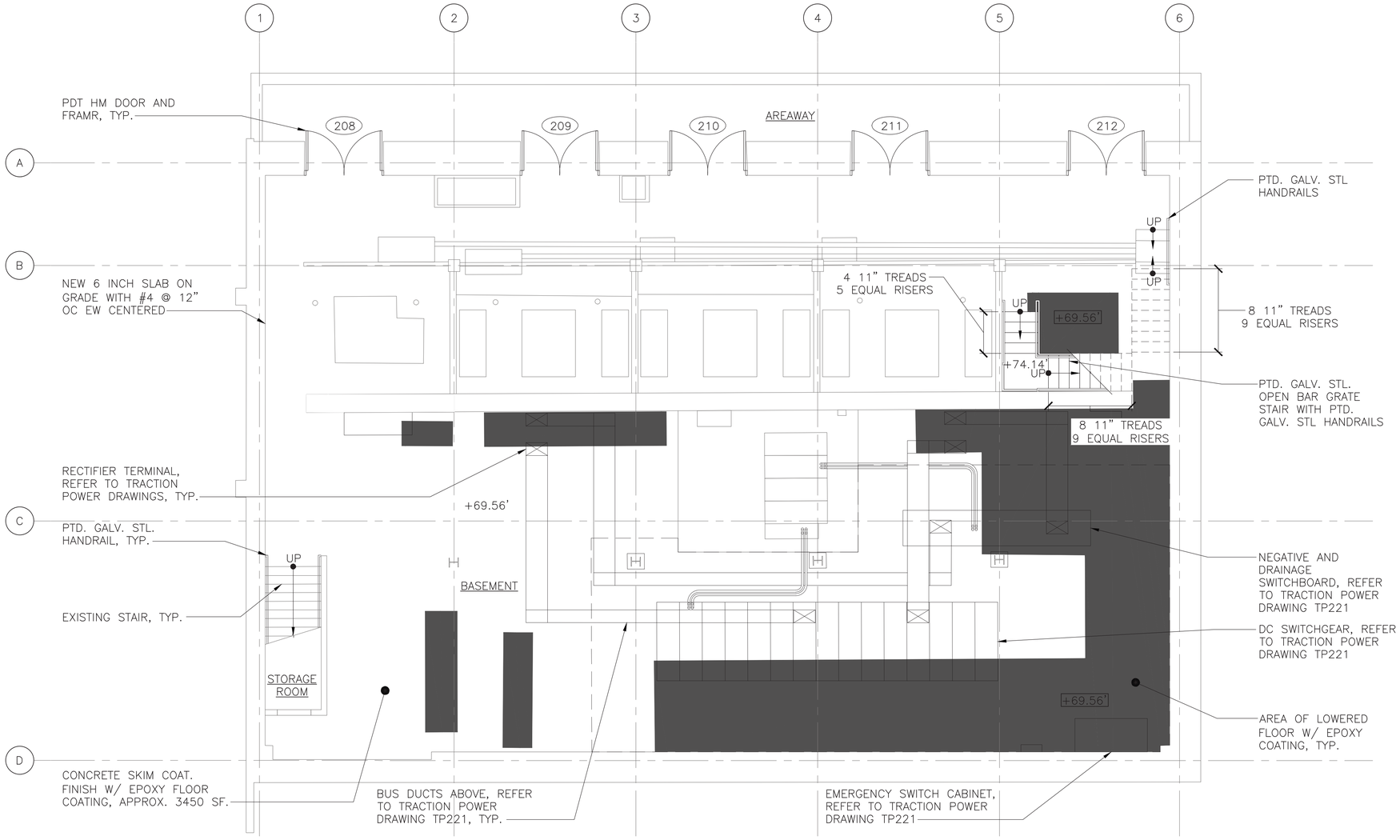

1 / A209 BASEMENT FLOOR PLAN
SCALE: 3/16" = 1'-0"

6 4 2 0 6
SCALE: 3/16"=1'0"

50% SUBMISSION
NOT FOR CONSTRUCTION

SOUTHEASTERN PENNSYLVANIA TRANSPORTATION AUTHORITY
EM&C DIVISION
1234 MARKET ST, 13TH FL, PHILADELPHIA, PA 19107

CHIEF ENGINEER - EM&C
CHIEF ENGINEERING OFFICER - B&B
CHIEF RAIL TRANSIT OFFICER
SYSTEM SAFETY
DIRECTOR OF ENGINEERING - B&B
MANAGER - ARCH / ENGINEERING
PROJECT MANAGER

HDR Engineering, Inc.
Philadelphia, PA
SOWINSKI SULLIVAN

REV	DATE	DESCRIPTION	BY	CK'D	APP'D

DATE PRINTED: 10/21/2025

PARK
SUBWAY/ELEVATED TRAINS
TRACTION POWER SUBSTATION REHABILITATION
ARCHITECTURAL
BASEMENT FLOOR PLAN

SCALE: AS SHOWN	SCALE FACTOR: 1:1
DATE: 08/22/2025	DRAWN BY: AC
	CHECKED BY: ZH
WORK ORDER NO.: 276482	
SHEET NUMBER: **A209**	
DWG. NO.: 10 OF 21	
SHT. NO.: 144 OF 448	
ARCHIVE NO.:	
COMPUTER FILE NO.: 17AN-A209	REV. NO.: -

STATUS: 50% SUBMISSION

C:\PW\WORKING\PITTD\17311791\17AN-A209.DWG

NOTES:

1. ALL CONDITIONS ARE EXISTING UNLESS NOTED OTHERWISE, TYPICAL.
2. ALL EXISTING DIMENSIONS SHALL BE VERIFIED IN FIELD, TYPICAL.
3. DRAWINGS INDICATE THE VARIOUS TYPES OF REPAIRS REQUIRED AT THE MOST SEVERE LOCATIONS. DRAWINGS SHOW THE INTENT OF THE SCOPE OF WORK BUT DO NOT INCLUDE EVERY SMALL AREA REQUIRING REPAIR, RESTORATION OR REFINISH.
4. WORK SITE IS AN ACTIVE TRACTION POWER SUBSTATION (TPSS). FOLLOW ALL SEPTA SAFETY RULES.
5. WORK SHALL BE PERFORMED IN STAGES ACCORDING TO OVERALL CONSTRUCTION STAGING AND SEQUENCING PLAN. SOME WORK MAY ONLY BE PERFORMED DURING POWER OUTAGE.

ROOF AND PARAPET NOTES:

1. REPLACE ENTIRE ROOF (APPROX 4460 SF)
2. REPLACE COPING CAP AND FLASHING (APPROX 282' LF)
3. REPLACE ROOFING DRAINS AND LEADERS
4. ROOFING SYSTEM SHALL MEET FM GLOBAL REQUIREMENTS.

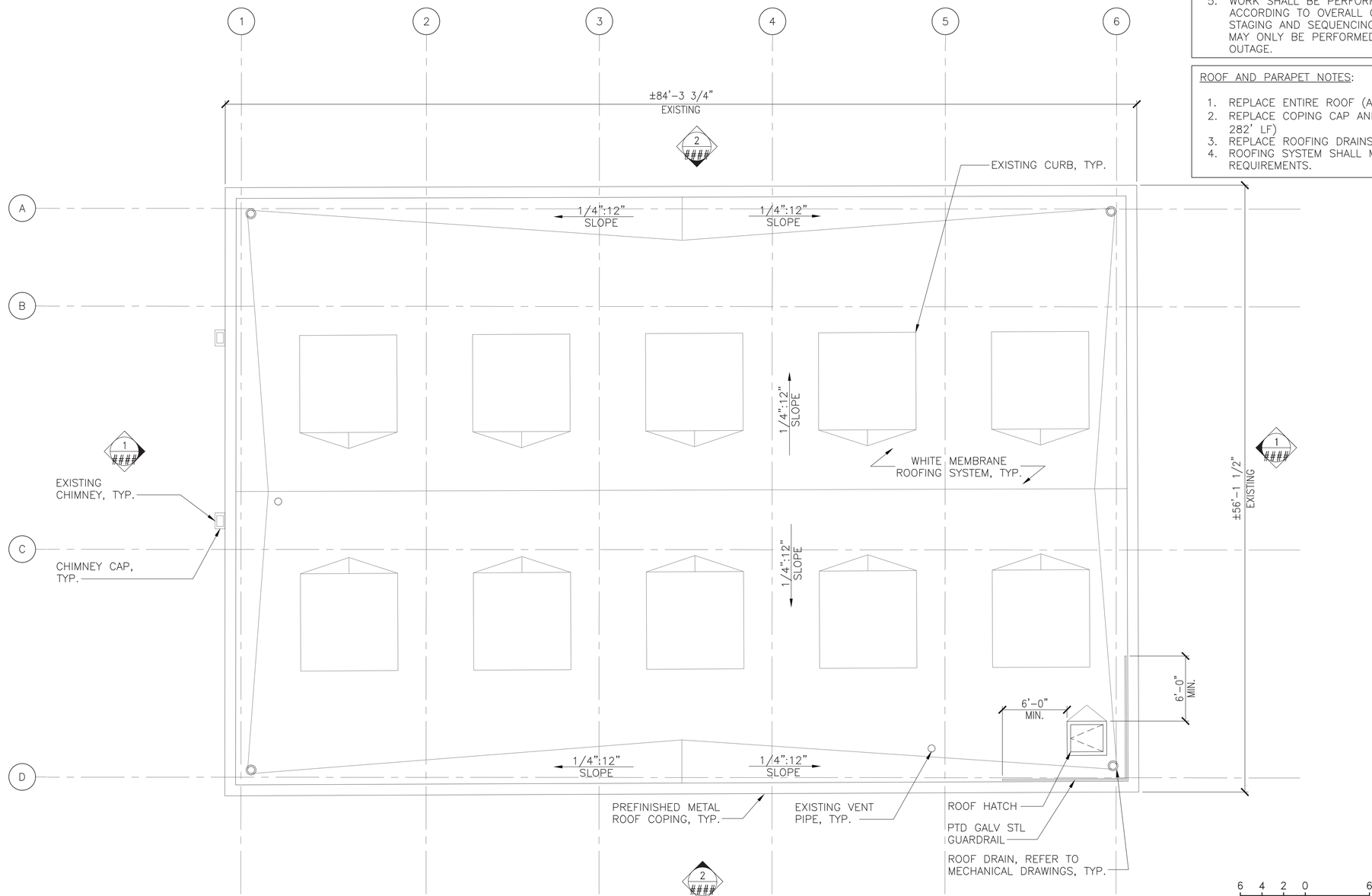

1 ROOF PLAN
SCALE: 3/16" = 1'-0"

6 4 2 0 6
SCALE: 3/16"=1'0"

50% SUBMISSION
NOT FOR CONSTRUCTION

SOUTHEASTERN PENNSYLVANIA TRANSPORTATION AUTHORITY
EM&C DIVISION
1234 MARKET ST, 13TH FL,
PHILADELPHIA, PA 19107

CHIEF ENGINEER - EM&C
CHIEF ENGINEERING OFFICER - B&B
CHIEF RAIL TRANSIT OFFICER
SYSTEM SAFETY
DIRECTOR OF ENGINEERING - B&B
MANAGER - ARCH / ENGINEERING
PROJECT MANAGER

HDR Engineering, Inc.
Philadelphia, PA

SOWINSKI SULLIVAN

REV	DATE	DESCRIPTION	BY	CK'D	APP'D

DATE PRINTED: 10/21/2025

PARK
SUBWAY/ELEVATED TRAINS
TRACTION POWER SUBSTATION
REHABILITATION
ARCHITECTURAL
A210 ROOF PLAN

SCALE: AS SHOWN	SCALE FACTOR: 1:1
DATE: 08/22/2025	DRAWN BY: AC
	CHECKED BY: ZH
WORK ORDER NO.: 276482	
SHEET NUMBER: ----	
DWG. NO.: 11 OF 21	
SHT. NO.: 145 OF 453	
ARCHIVE NO.:	
COMPUTER FILE NO.: 17AN-A210	REV. NO.: -

C:\PW\WORKING\PITTD\17311791\17AN-A210.DWG

STATUS: 50% SUBMISSION

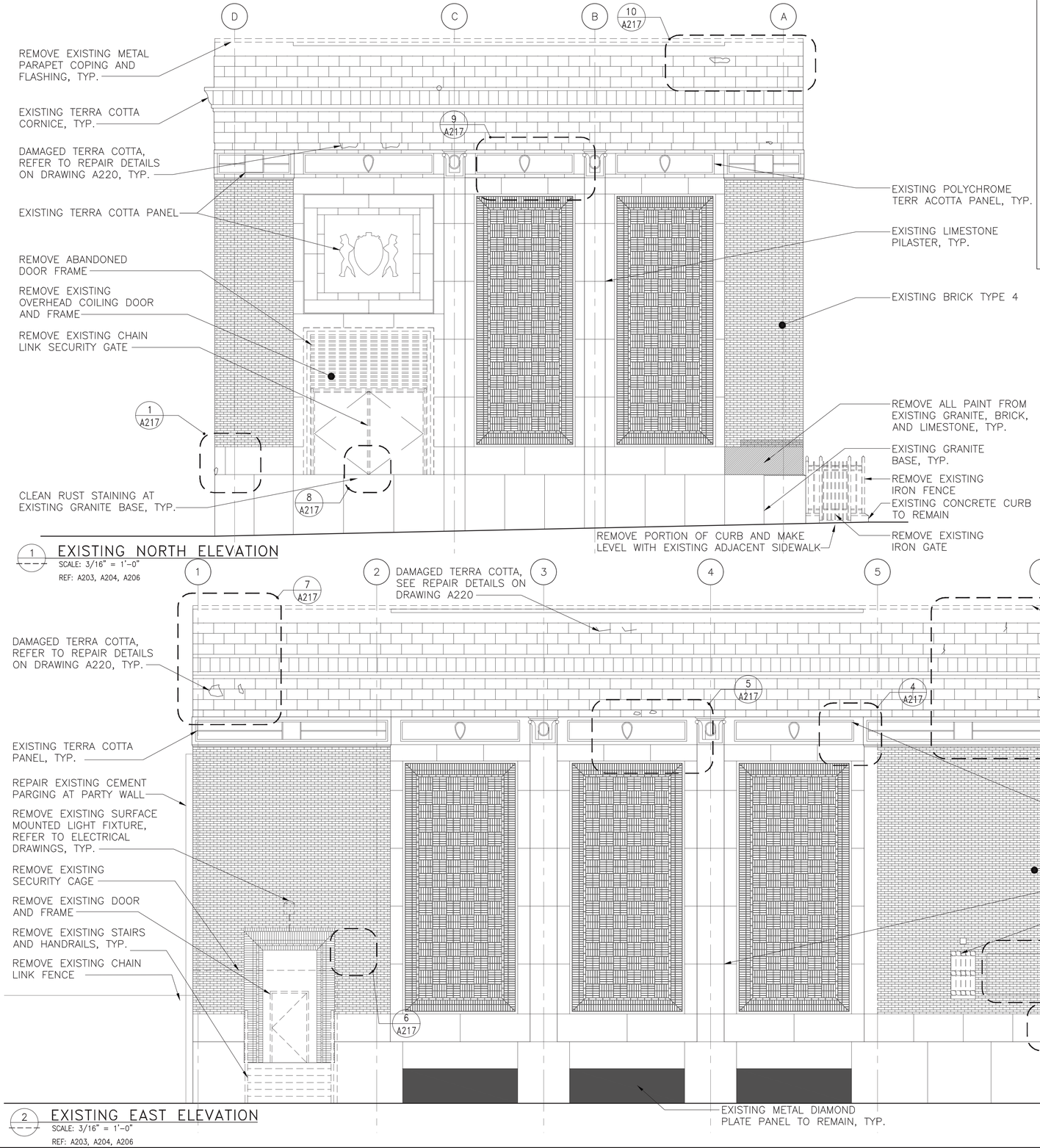

NOTES:

1. ALL CONDITIONS ARE EXISTING UNLESS NOTED OTHERWISE, TYPICAL.
2. ALL EXISTING DIMENSIONS SHALL BE VERIFIED IN FIELD, TYPICAL.
3. DRAWINGS INDICATE THE VARIOUS TYPES OF REPAIRS REQUIRED AT THE MOST SEVERE LOCATIONS. DRAWINGS SHOW THE INTENT OF THE SCOPE OF WORK BUT DO NOT INCLUDE EVERY SMALL AREA REQUIRING REPAIR, RESTORATION OR REFINISH.
4. RAKE AND REPOINT DAMAGED MORTAR JOINTS, EACH ELEVATION.
5. CLEAN ENTIRE FACADE, EACH ELEVATION.
6. WORK SITE IS AN ACTIVE TRACTION POWER SUBSTATION (TPSS). FOLLOW ALL SEPTA SAFETY RULES.
7. WORK SHALL BE PERFORMED IN STAGES ACCORDING TO OVERALL CONSTRUCTION STAGING AND SEQUENCING PLAN. SOME WORK MAY ONLY BE PERFORMED DURING POWER OUTAGE.

BRICK LEGEND:

1. BRICK TYPE 1 = HY-TEX BRICK
2. BRICK TYPE 2 = ENAMELED BRICK – "GREEN"
3. BRICK TYPE 3 = ENAMELED BRICK – "GRANITE MARBLE"
4. BRICK TYPE 4 = FACE BRICK

50% SUBMISSION
NOT FOR CONSTRUCTION

SOUTHEASTERN PENNSYLVANIA TRANSPORTATION AUTHORITY
EM&C DIVISION
1234 MARKET ST, 13TH FL.
PHILADELPHIA, PA 19107

CHIEF ENGINEER - EM&C
CHIEF ENGINEERING OFFICER - B&B
CHIEF RAIL TRANSIT OFFICER
SYSTEM SAFETY
DIRECTOR OF ENGINEERING - B&B
MANAGER - ARCH / ENGINEERING
PROJECT MANAGER

HDR Engineering, Inc.
Philadelphia, PA

SOWINSKI SULLIVAN

REV	DATE	DESCRIPTION	BY	CKD	APD

DATE PRINTED: 10/21/2025

PARK
SUBWAY/ELEVATED TRAINS
TRACTION POWER SUBSTATION REHABILITATION
ARCHITECTURAL
A211 EXISTING ELEVATIONS I

SCALE: AS SHOWN	SCALE FACTOR: 1:1
DATE: 08/22/2025	DRAWN BY: AC
	CHECKED BY: ZH
WORK ORDER NO.: 276482	
SHEET NUMBER: ----	
DWG. NO.: 12 OF 21	
SHT. NO.: 146 OF 448	
ARCHIVE NO.:	
COMPUTER FILE NO.: 17AN-A211	REV. NO.: -

STATUS: 50% SUBMISSION

C:\PW\WORKING\PITTID\7317917AN-A211.DWG

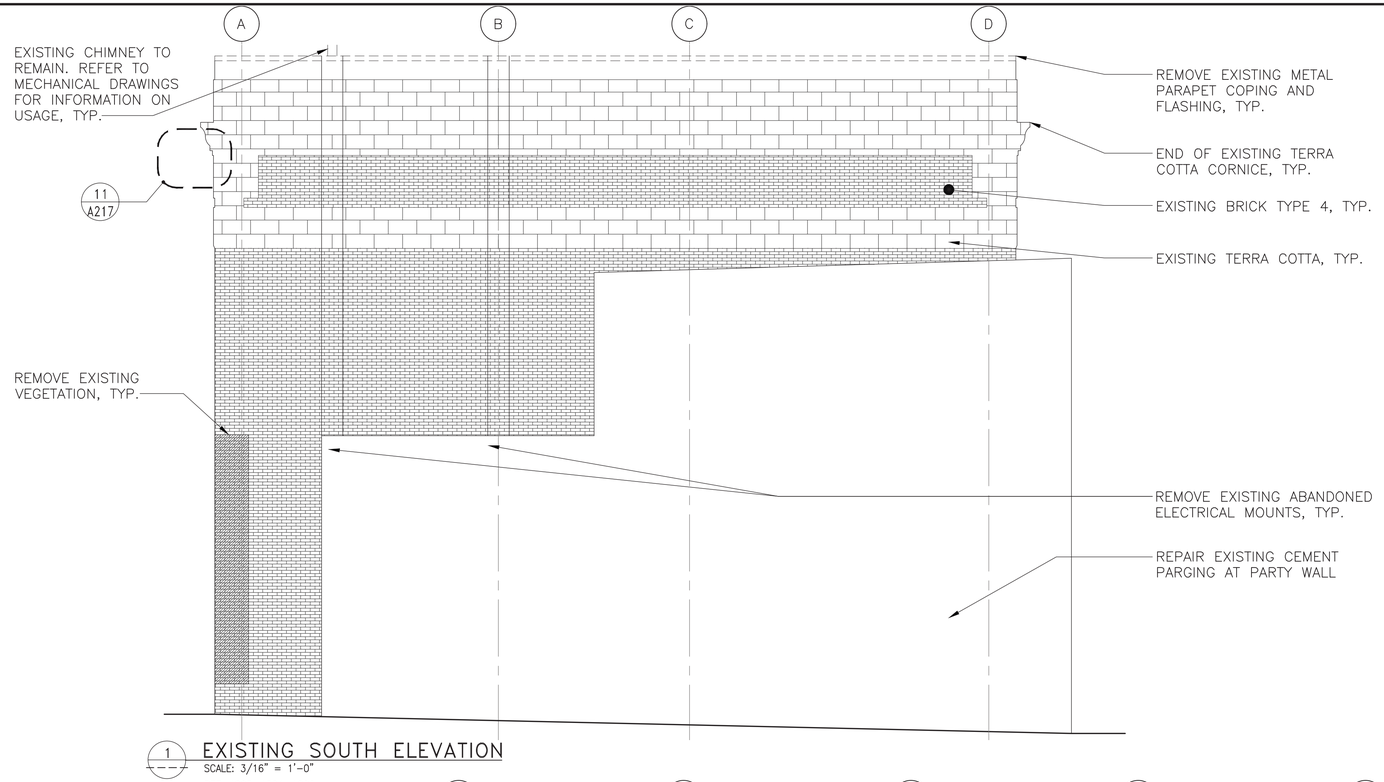

1 EXISTING SOUTH ELEVATION
SCALE: 3/16" = 1'-0"
REF: A203, A204, A206

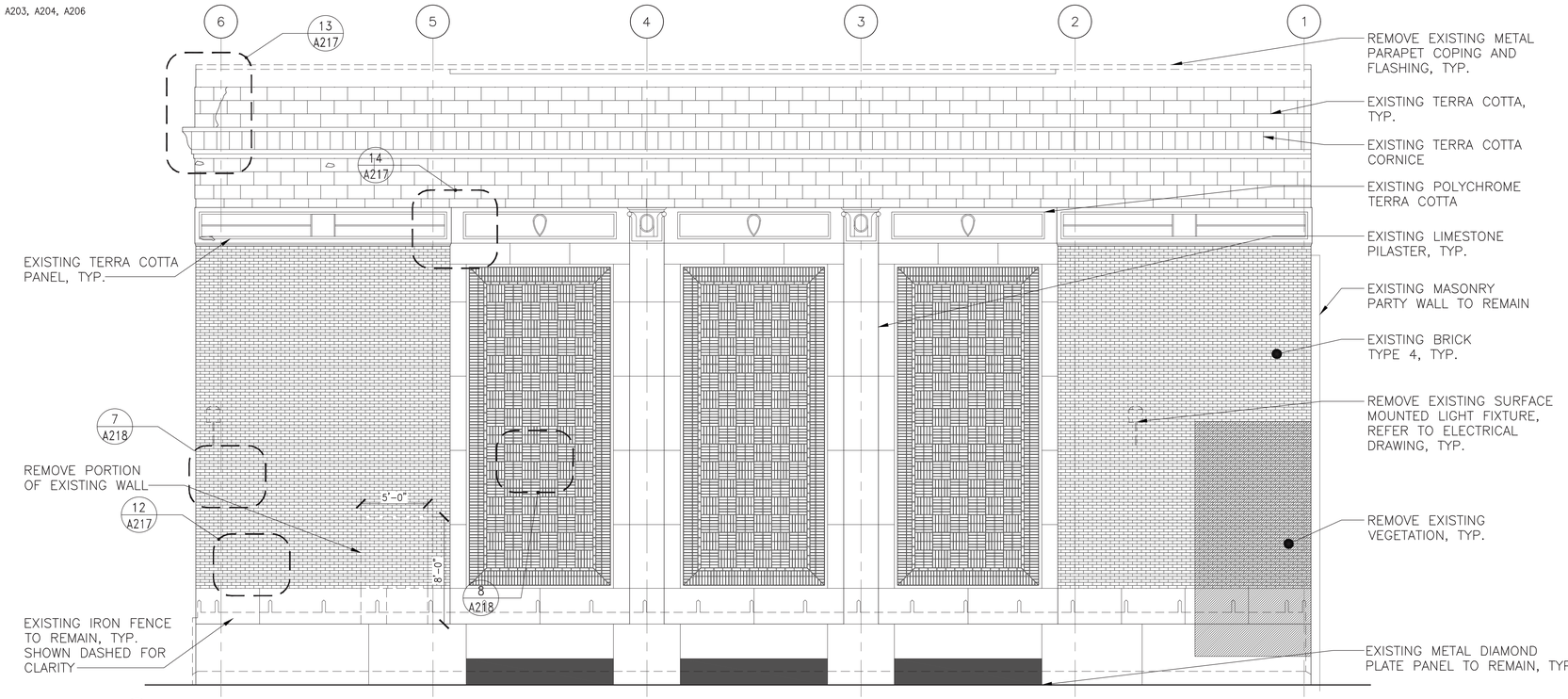

2 EXISTING WEST ELEVATION
SCALE: 3/16" = 1'-0"
REF: A203, A204, A206

6 4 2 0 6
SCALE: 3/16"=1'0"

NOTES:

1. ALL CONDITIONS ARE EXISTING UNLESS NOTED OTHERWISE, TYPICAL.
2. ALL EXISTING DIMENSIONS SHALL BE VERIFIED IN FIELD, TYPICAL.
3. DRAWINGS INDICATE THE VARIOUS TYPES OF REPAIRS REQUIRED AT THE MOST SEVERE LOCATIONS. DRAWINGS SHOW THE INTENT OF THE SCOPE OF WORK BUT DO NOT INCLUDE EVERY SMALL AREA REQUIRING REPAIR, RESTORATION OR REFINISH.
4. RAKE AND REPOINT DAMAGED MORTAR JOINTS, EACH ELEVATION.
5. CLEAN ENTIRE FACADE, EACH ELEVATION.
6. WORK SITE IS AN ACTIVE TRACTION POWER SUBSTATION (TPSS). FOLLOW ALL SEPTA SAFETY RULES.
7. WORK SHALL BE PERFORMED IN STAGES ACCORDING TO OVERALL CONSTRUCTION STAGING AND SEQUENCING PLAN. SOME WORK MAY ONLY BE PERFORMED DURING POWER OUTAGE.
8. CLOSE INSPECTION OF PORTIONS OF THE FACADE WAS NOT POSSIBLE DUE TO RESTRICTED ACCESS AT PRIVATE PROPERTY. DUE TO THIS, NOT ALL AREAS REQUIRING REPAIR, RESTORATIONS OR REFURBISHING ARE INCLUDED ON DRAWINGS. THE CONTRACTOR SHALL INSPECT ENTIRE BUILDING AND REPAIR ALL DAMAGE.

BRICK LEGEND:

1. BRICK TYPE 1 = HY-TEX BRICK
2. BRICK TYPE 2 = ENAMELED BRICK – "GREEN"
3. BRICK TYPE 3 = ENAMELED BRICK – "GRANITE MARBLE"
4. BRICK TYPE 4 = FACE BRICK

50% SUBMISSION
NOT FOR CONSTRUCTION

SOUTHEASTERN PENNSYLVANIA TRANSPORTATION AUTHORITY
EM&C DIVISION
1234 MARKET ST, 13TH FL.
PHILADELPHIA, PA 19107

CHIEF ENGINEER - EM&C
CHIEF ENGINEERING OFFICER - B&B
CHIEF RAIL TRANSIT OFFICER
SYSTEM SAFETY
DIRECTOR OF ENGINEERING - B&B
MANAGER - ARCH / ENGINEERING
PROJECT MANAGER

HDR Engineering, Inc.
Philadelphia, PA
SOWINSKI SULLIVAN

REV	DATE	DESCRIPTION	BY	CK'D	APP'D

DATE PRINTED: 10/21/2025

PARK
SUBWAY/ELEVATED TRAINS
TRACTION POWER SUBSTATION REHABILITATION
ARCHITECTURAL
A212 ELEVATIONS II

SCALE: AS SHOWN	SCALE FACTOR: 1:1
DATE: 08/22/2025	DRAWN BY: AC / CHECKED BY: ZH
WORK ORDER NO.: 276482	
SHEET NUMBER: ----	
DWG. NO.: 13 OF 21	
SHT. NO.: 147 OF 448	
ARCHIVE NO.:	
COMPUTER FILE NO.: 17AN-A212	REV. NO.: -

STATUS: 50% SUBMISSION

C:\PW\WORKING\PITTID\7317917AN-A212.DWG

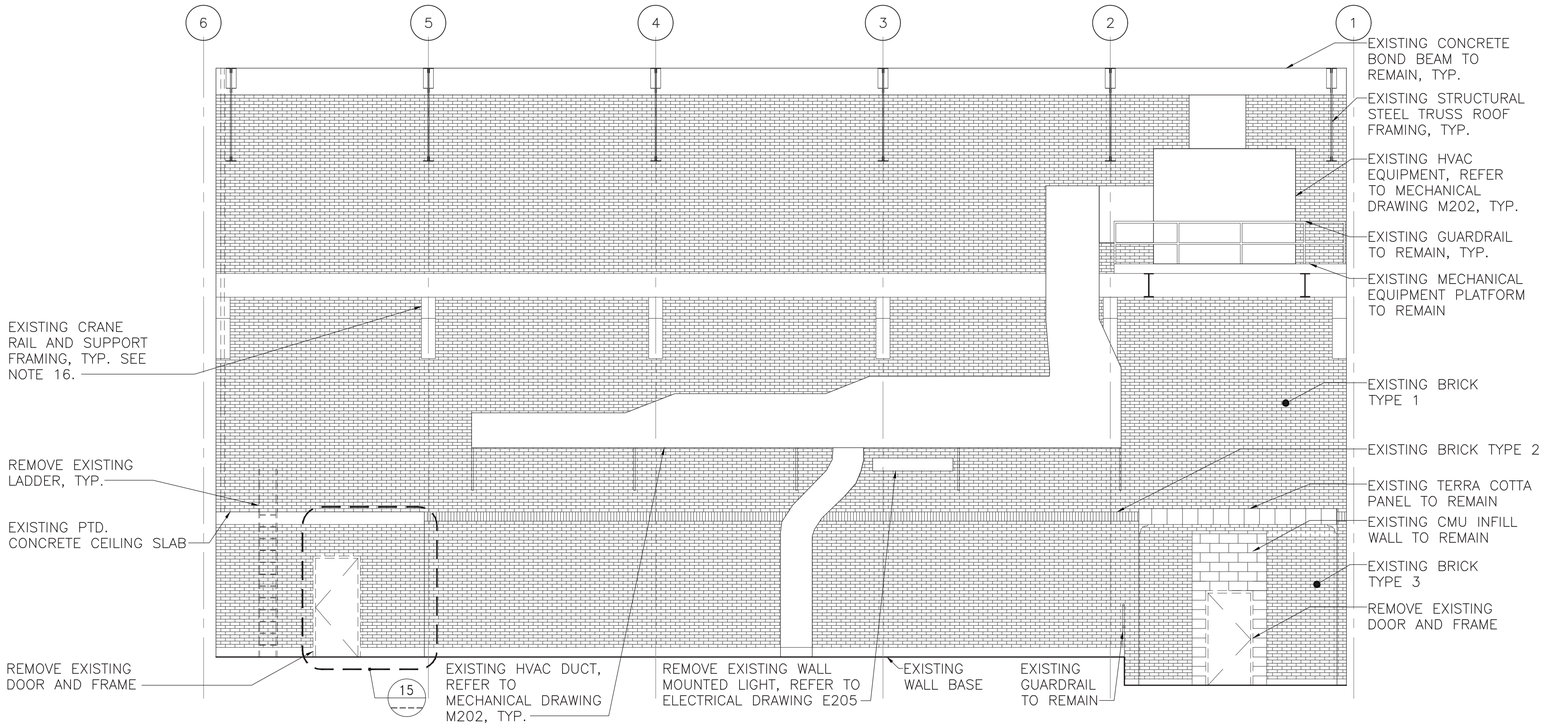

1 A213 EXISTING EAST INTERIOR ELEVATION
SCALE: 3/16" = 1'-0"
REF: ----, ----

NOTES:

1. ALL CONDITIONS ARE EXISTING UNLESS NOTED OTHERWISE, TYPICAL.
2. ALL EXISTING DIMENSIONS SHALL BE VERIFIED IN FIELD, TYPICAL.
3. DRAWINGS INDICATE THE VARIOUS TYPES OF REPAIRS REQUIRED AT THE MOST SEVERE LOCATIONS. DRAWINGS SHOW THE INTENT OF THE SCOPE OF WORK BUT DO NOT INCLUDE EVERY SMALL AREA REQUIRING REPAIR, RESTORATION OR REFINISH.
4. SCRAPE, PREPARE, PRIME AND PAINT ENTIRE SURFACE OF CONCRETE CEILING, ALL ROOMS.
5. REMOVE ALL PAINT FROM ALL BRICK SURFACES, ALL ROOMS, EACH WALL.
6. WORK SITE IS AN ACTIVE TRACTION POWER SUBSTATION (TPSS). FOLLOW ALL SEPTA SAFETY RULES.
7. WORK SHALL BE PERFORMED IN STAGES ACCORDING TO OVERALL CONSTRUCTION STAGING AND SEQUENCING PLAN. SOME WORK MAY ONLY BE PERFORMED DURING POWER OUTAGE.
8. SCRAPE, PREPARE, PRIME, AND PAINT EXISTING OVERHEAD CRANE, CRANE RAIL, AND ASSOCIATED STEEL SUPPORT FRAMING, TYPICAL.
9. SCRAPE, PREPARE, PRIME, AND PAINT ALL EXPOSED STEEL FRAMING, TYPICAL.
10. SCRAPE, PREPARE, PRIME, AND PAINT EXISTING MECHANICAL EQUIPMENT PLATFORM AND ASSOCIATED GUARDRAILS.
11. SCRAP, PREPARE, PRIME, AND PAINT ALL EXPOSED CMU.
12. SEAL ALL ABANDONED PENETRATIONS PER DETAIL 5/----.
13. REPAIR ALL ACTIVE PENETRATIONS PER DETAIL 6/----.
14. REMOVE ALL EXISTING LIGHT FIXTURES, REFER TO ELECTRICAL DRAWINGS E204 THROUGH E206, TYPICAL.
15. REMOVE ALL EXISTING TRACTION POWER EQUIPMENT. REFER TO TRACTION POWER DRAWINGS TP211 THROUGH TP219, TYPICAL.
16. CRANE TO BE FULLY INSPECTED TO VERIFY REQUIREMENTS TO BRING CRANE SYSTEM BACK INTO OPERATION. FOR BIDDING PURPOSES, ASSUME COSTS FOR THE FOLLOWING:
    A. INSPECTION
    B. CRANE TESTING
    C. HOIST REPLACEMENT
    D. REFURBISHMENT OF REMAINING SYSTEM INCLUDING CLEANING AND PAINTING

BRICK LEGEND:

1. BRICK TYPE 1 = HY-TEX BRICK
2. BRICK TYPE 2 = ENAMELED BRICK – "GREEN"
3. BRICK TYPE 3 = ENAMELED BRICK – "GRANITE MARBLE"
4. BRICK TYPE 4 = FACE BRICK

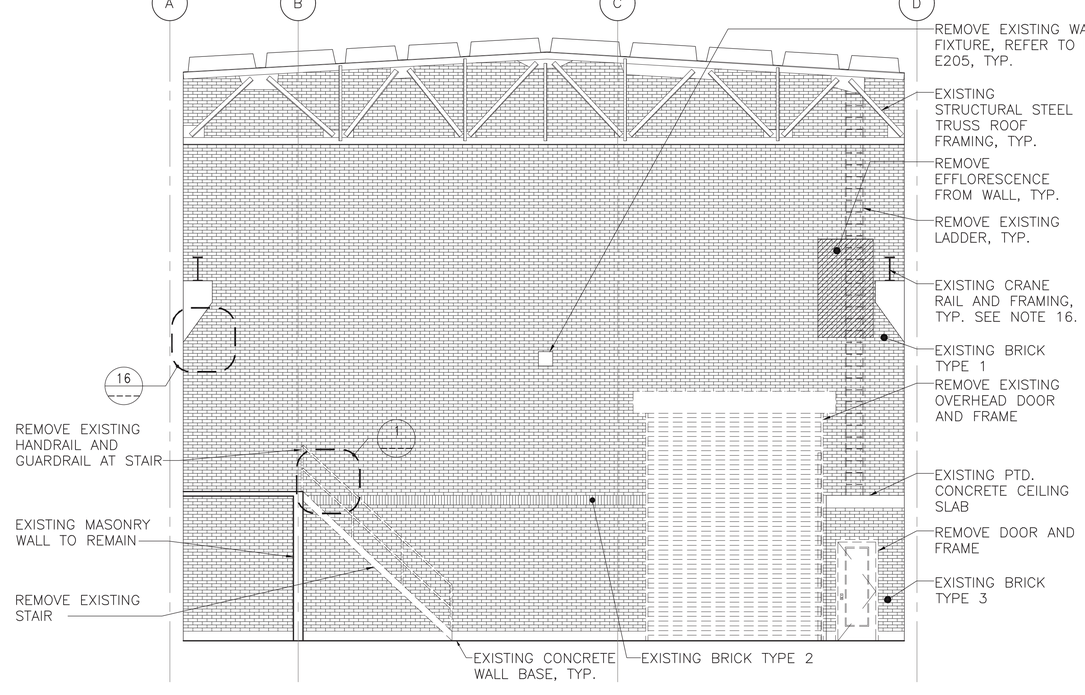

2 A213 EXISTING NORTH INTERIOR ELEVATION
SCALE: 3/16" = 1'-0"
REF: ----, ----

6 4 2 0 6
SCALE: 3/16"=1'0"

50% SUBMISSION
NOT FOR CONSTRUCTION

SOUTHEASTERN PENNSYLVANIA TRANSPORTATION AUTHORITY
EM&C DIVISION
1234 MARKET ST, 13TH FL.
PHILADELPHIA, PA 19107

CHIEF ENGINEER - EM&C
CHIEF ENGINEERING OFFICER - B&B
CHIEF RAIL TRANSIT OFFICER
SYSTEM SAFETY
DIRECTOR OF ENGINEERING - B&B
MANAGER - ARCH / ENGINEERING
PROJECT MANAGER

HDR Engineering, Inc.
Philadelphia, PA

SOWINSKI SULLIVAN

REV	DATE	DESCRIPTION	BY	CKD	APD

DATE PRINTED: 10/21/2025

PARK
SUBWAY/ELEVATED TRAINS
TRACTION POWER SUBSTATION REHABILITATION
ARCHITECTURAL
EXISTING INTERIOR ELEVATIONS - SHEET 1

SCALE: AS SHOWN	SCALE FACTOR: 1:1
DATE: 08/22/2025	DRAWN BY: AC
	CHECKED BY: ZH
WORK ORDER NO.: 276482	
SHEET NUMBER: **A213**	
DWG. NO.: 14 OF 21	
SHT. NO.: 148 OF 452	
ARCHIVE NO.:	
COMPUTER FILE NO.: 17AN-A213	REV. NO.: -

STATUS: 50% SUBMISSION

C:\PWWORKING\PITTDI\73117917AN-A213.DWG

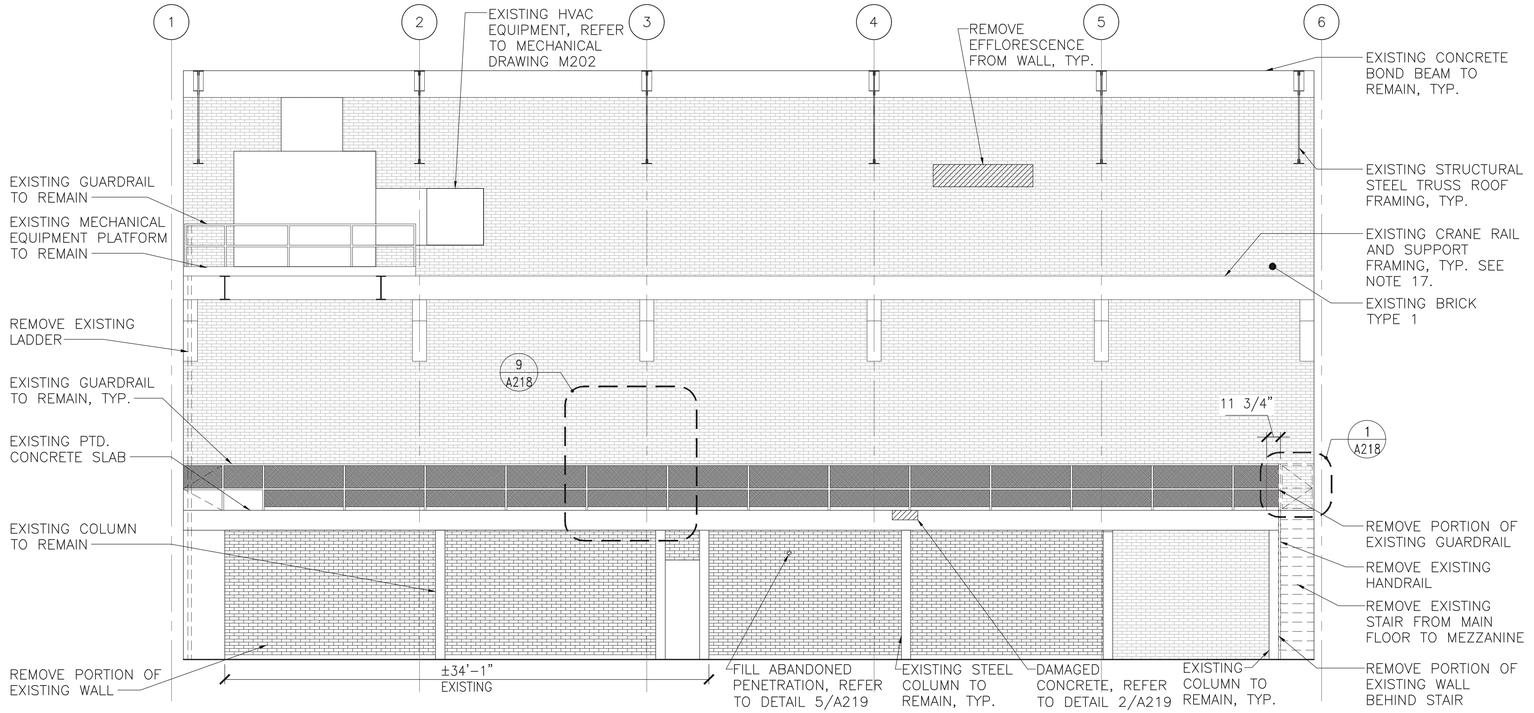

1 A214 EXISTING WEST INTERIOR ELEVATION

SCALE: 3/16" = 1'-0"

REF: A203, A204

NOTES:

1. ALL CONDITIONS ARE EXISTING UNLESS NOTED OTHERWISE, TYPICAL.
2. ALL EXISTING DIMENSIONS SHALL BE VERIFIED IN FIELD, TYPICAL.
3. DRAWINGS INDICATE THE VARIOUS TYPES OF REPAIRS REQUIRED AT THE MOST SEVERE LOCATIONS. DRAWINGS SHOW THE INTENT OF THE SCOPE OF WORK BUT DO NOT INCLUDE EVERY SMALL AREA REQUIRING REPAIR, RESTORATION OR REFINISH.
4. SCRAPE, PREPARE, PRIME AND PAINT ENTIRE SURFACE OF CONCRETE CEILING, ALL ROOMS.
5. REMOVE ALL PAINT FROM ALL BRICK SURFACES, ALL ROOMS, EACH WALL.
6. WORK SITE IS AN ACTIVE TRACTION POWER SUBSTATION (TPSS). FOLLOW ALL SEPTA SAFETY RULES.
7. WORK SHALL BE PERFORMED IN STAGES ACCORDING TO OVERALL CONSTRUCTION STAGING AND SEQUENCING PLAN. SOME WORK MAY ONLY BE PERFORMED DURING POWER OUTAGE.
8. SCRAPE, PREPARE, PRIME, AND PAINT EXISTING OVERHEAD CRANE, CRANE RAIL, AND ASSOCIATED STEEL SUPPORT FRAMING, TYPICAL.
9. SCRAPE, PREPARE, PRIME AND PAINT ALL EXPOSED STEEL FRAMING, TYPICAL.
10. SCRAPE, PREPARE, PRIME, AND PAINT EXISTING MECHANICAL EQUIPMENT PLATFORM AND ASSOCIATED GUARDRAILS.
11. SCRAP, PREPARE, PRIME AND PAINT ALL EXPOSED CMU.
12. SEAL ALL ABANDONED PENETRATIONS PER DETAIL 5/A219.
13. REPAIR ALL ACTIVE PENETRATIONS PER DETAIL 6/A219.
14. REMOVE ALL EXISTING LIGHT FIXTURES, REFER TO ELECTRICAL DRAWINGS E204 THROUGH E206, TYPICAL.
15. REMOVE ALL EXISTING TRACTION POWER EQUIPMENT. REFER TO TRACTION POWER DRAWINGS TP211 THROUGH TP219, TYPICAL.
16. CONTACT CRANE MANUFACTURER TO VERIFY EXISTING WARRANTY.
17. CRANE TO BE FULLY INSPECTED TO VERIFY REQUIREMENTS TO BRING CRANE SYSTEM BACK INTO OPERATON. FOR BIDDING PURPOSES, ASSUME COSTS FOR THE FOLLOWING:
    A. INSPECTION
    B. CRANE TESTING
    C. HOIST REPLACEMENT
    D. REFURBISHMENT OF REMAINING SYSTEM INCLUDING CLEANING AND PAINTING

BRICK LEGEND:

1. BRICK TYPE 1 = HY-TEX BRICK
2. BRICK TYPE 2 = ENAMELED BRICK – "GREEN"
3. BRICK TYPE 3 = ENAMELED BRICK – "GRANITE MARBLE"
4. BRICK TYPE 4 = FACE BRICK

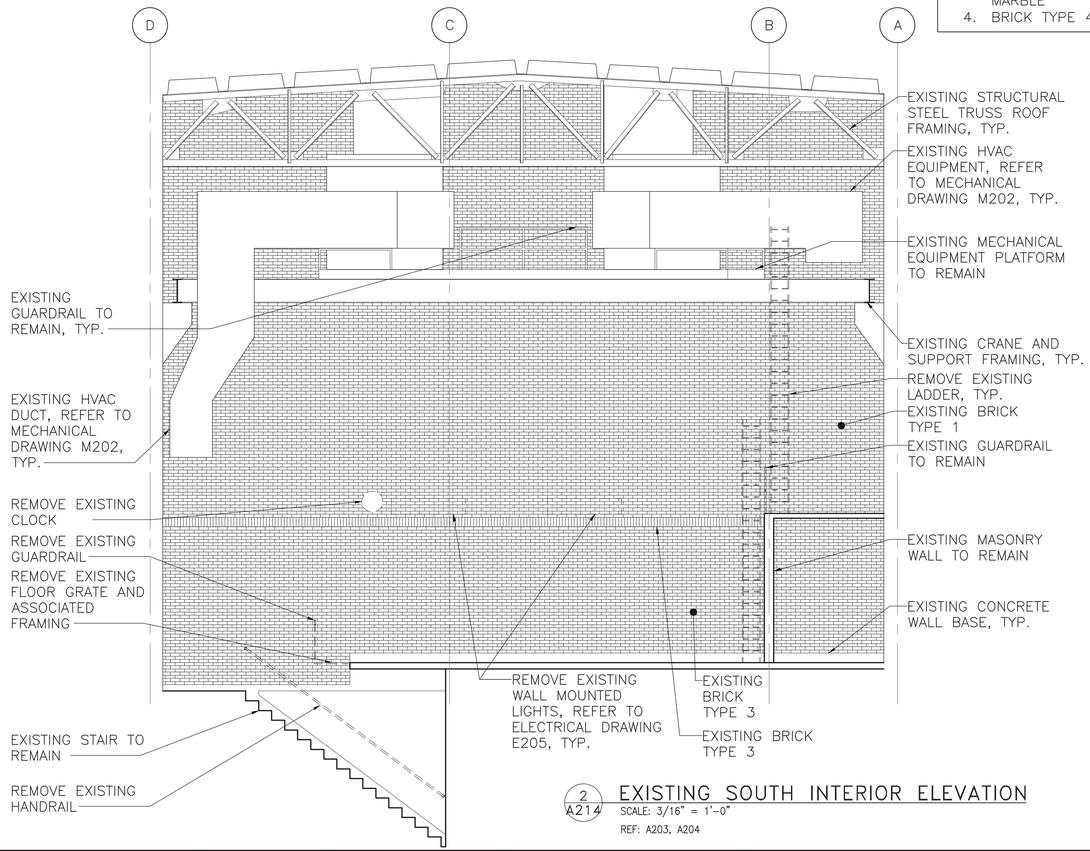

2 A214 EXISTING SOUTH INTERIOR ELEVATION

SCALE: 3/16" = 1'-0"

REF: A203, A204

6 4 2 0 6

SCALE: 3/16"=1'0"

50% SUBMISSION
NOT FOR CONSTRUCTION

SOUTHEASTERN PENNSYLVANIA TRANSPORTATION AUTHORITY
EM&C DIVISION
1234 MARKET ST, 13TH FL.
PHILADELPHIA, PA 19107

CHIEF ENGINEER - EM&C
CHIEF ENGINEERING OFFICER - B&B
CHIEF RAIL TRANSIT OFFICER
SYSTEM SAFETY
DIRECTOR OF ENGINEERING - B&B
MANAGER - ARCH / ENGINEERING
PROJECT MANAGER

HDR Engineering, Inc.
Philadelphia, PA

SOWINSKI SULLIVAN

REV	DATE	DESCRIPTION	BY	CKD	APD

DATE PRINTED: 10/21/2025

PARK
SUBWAY/ELEVATED TRAINS
TRACTION POWER SUBSTATION REHABILITATION
ARCHITECTURAL
EXISTING INTERIOR ELEVATIONS I

SCALE: AS SHOWN	SCALE FACTOR: 1:1
DATE: 08/22/2025	DRAWN BY: AC
	CHECKED BY: ZH
WORK ORDER NO.: 276482	
SHEET NUMBER: **A214**	
DWG. NO.: 15 OF 21	
SHT. NO.: 149 OF 448	
ARCHIVE NO.:	
COMPUTER FILE NO.: 17AN-A214	REV. NO.: -

STATUS: 50% SUBMISSION

C:\PWWORKINGS\PITTDO1\7311791\17AN-A214.DWG

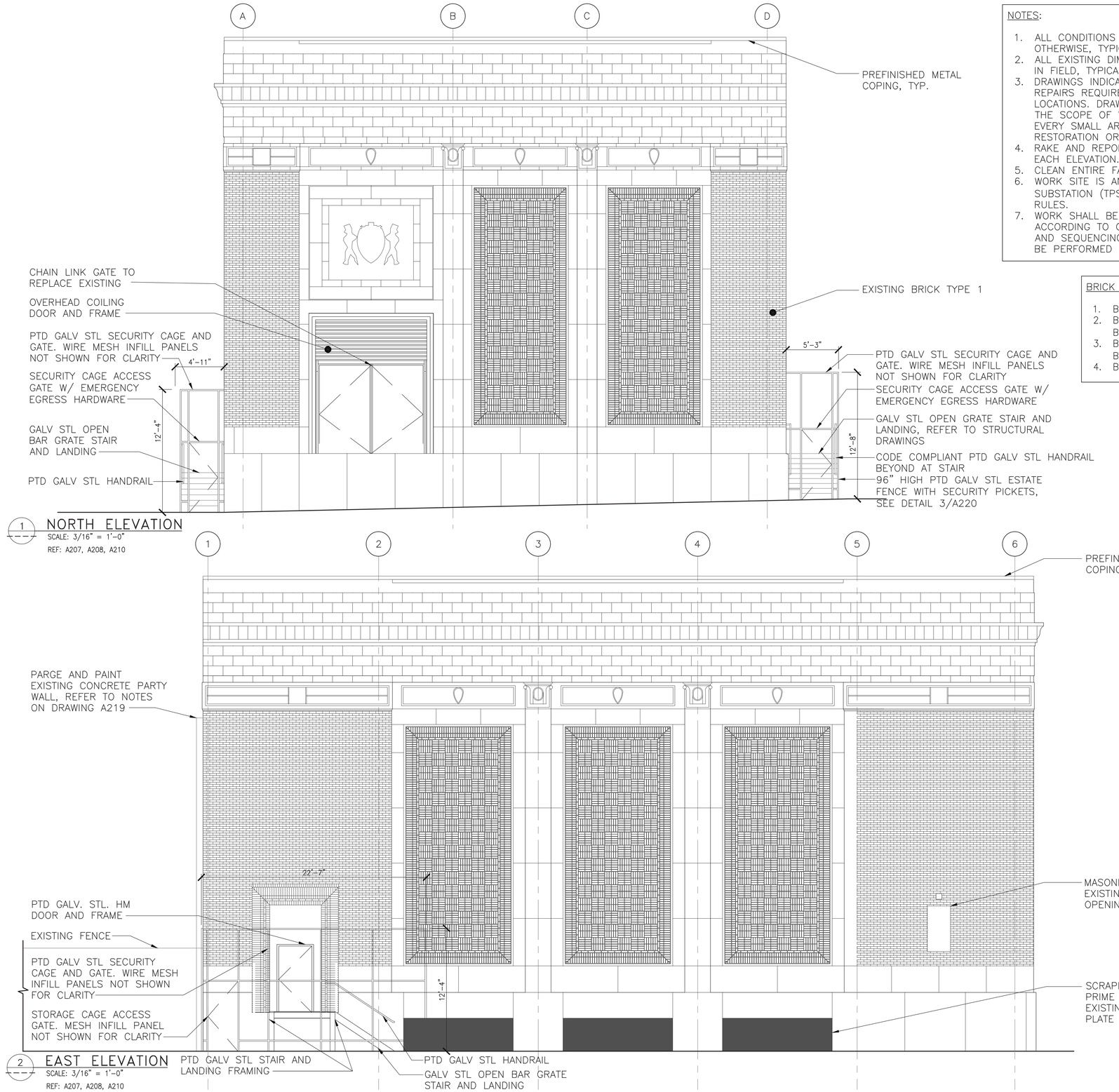

1 NORTH ELEVATION
SCALE: 3/16" = 1'-0"
REF: A207, A208, A210

2 EAST ELEVATION
SCALE: 3/16" = 1'-0"
REF: A207, A208, A210

6 4 2 0 6
SCALE: 3/16"=1'0"

NOTES:

1. ALL CONDITIONS ARE EXISTING UNLESS NOTED OTHERWISE, TYPICAL.
2. ALL EXISTING DIMENSIONS SHALL BE VERIFIED IN FIELD, TYPICAL.
3. DRAWINGS INDICATE THE VARIOUS TYPES OF REPAIRS REQUIRED AT THE MOST SEVERE LOCATIONS. DRAWINGS SHOW THE INTENT OF THE SCOPE OF WORK BUT DO NOT INCLUDE EVERY SMALL AREA REQUIRING REPAIR, RESTORATION OR REFINISH.
4. RAKE AND REPOINT DAMAGED MORTAR JOINTS, EACH ELEVATION.
5. CLEAN ENTIRE FACADE, EACH ELEVATION.
6. WORK SITE IS AN ACTIVE TRACTION POWER SUBSTATION (TPSS). FOLLOW ALL SEPTA SAFETY RULES.
7. WORK SHALL BE PERFORMED IN STAGES ACCORDING TO OVERALL CONSTRUCTION STAGING AND SEQUENCING PLAN. SOME WORK MAY ONLY BE PERFORMED DURING POWER OUTAGE.

BRICK LEGEND:

1. BRICK TYPE 1=HY-TEX BRICK
2. BRICK TYPE 2=ENAMELED BRICK-"GREEN"
3. BRICK TYPE 3=ENAMELED BRICK-"GRANITE MARBLE"
4. BRICK TYPE 4=FACE BRICK

50% SUBMISSION
NOT FOR CONSTRUCTION

SOUTHEASTERN PENNSYLVANIA TRANSPORTATION AUTHORITY
EM&C DIVISION
1234 MARKET ST, 13TH FL.
PHILADELPHIA, PA 19107

CHIEF ENGINEER - EM&C
CHIEF ENGINEERING OFFICER - B&B
CHIEF RAIL TRANSIT OFFICER
SYSTEM SAFETY
DIRECTOR OF ENGINEERING - B&B
MANAGER - ARCH / ENGINEERING
PROJECT MANAGER

HDR Engineering, Inc.
Philadelphia, PA

SOWINSKI SULLIVAN

REV	DATE	DESCRIPTION	BY	CK'D	APP'D

DATE PRINTED: 10/21/2025

PARK
SUBWAY/ELEVATED TRAINS
TRACTION POWER SUBSTATION REHABILITATION
ARCHITECTURAL
A215 EXISTING ELEVATIONS I

SCALE: AS SHOWN	SCALE FACTOR: 1:1
DATE: 08/22/2025	DRAWN BY: AC
	CHECKED BY: ZH
WORK ORDER NO.: 276482	
SHEET NUMBER: - - - -	
DWG. NO.: 16 OF 21	
SHT. NO.: 150 OF 448	
ARCHIVE NO.:	
COMPUTER FILE NO.: 17AN-A215	REV. NO.: -

STATUS: 50% SUBMISSION

C:\PWWORKING\PITTD\17311791\17AN-A215.DWG

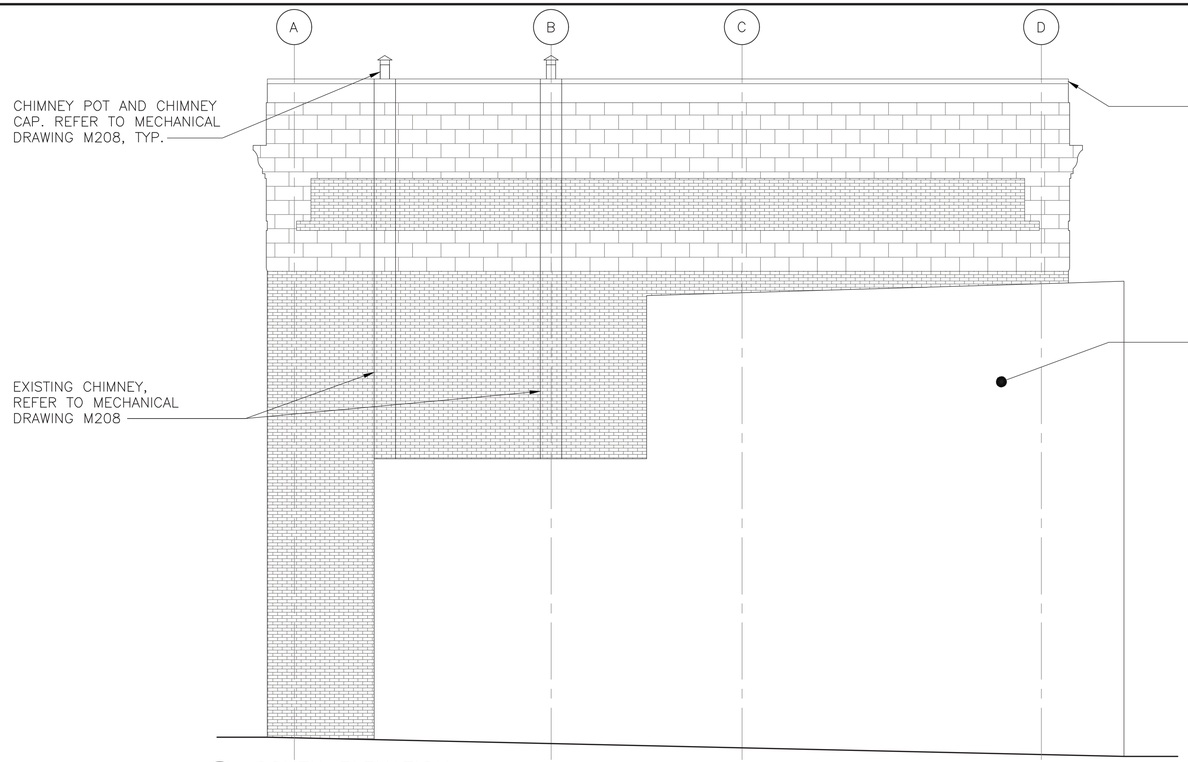

1 SOUTH ELEVATION
SCALE: 3/16" = 1'-0"
REF: ----, ----, ----

NOTES:

1. ALL CONDITIONS ARE EXISTING UNLESS NOTED OTHERWISE, TYPICAL.
2. ALL EXISTING DIMENSIONS SHALL BE VERIFIED IN FIELD, TYPICAL.
3. DRAWINGS INDICATE THE VARIOUS TYPES OF REPAIRS REQUIRED AT THE MOST SEVERE LOCATIONS. DRAWINGS SHOW THE INTENT OF THE SCOPE OF WORK BUT DO NOT INCLUDE EVERY SMALL AREA REQUIRING REPAIR, RESTORATION OR REFINISH.
4. RAKE AND REPOINT DAMAGED MORTAR JOINTS, EACH ELEVATION.
5. CLEAN ENTIRE FACADE, EACH ELEVATION.
6. WORK SITE IS AN ACTIVE TRACTION POWER SUBSTATION (TPSS). FOLLOW ALL SEPTA SAFETY RULES.
7. WORK SHALL BE PERFORMED IN STAGES ACCORDING TO OVERALL CONSTRUCTION STAGING AND SEQUENCING PLAN. SOME WORK MAY ONLY BE PERFORMED DURING POWER OUTAGE.
8. CLOSE INSPECTION OF PORTIONS OF THE FACADE WAS NOT POSSIBLE DUE TO RESTRICTED ACCESS AT PRIVATE PROPERTY. DUE TO THIS, NOT ALL AREAS REQUIRING REPAIR, RESTORATIONS OR REFURBISHING ARE INCLUDED ON DRAWINGS. THE CONTRACTOR SHALL INSPECT ENTIRE BUILDING AND REPAIR ALL DAMAGE.

BRICK LEGEND:

1. BRICK TYPE 1=HY-TEX BRICK
2. BRICK TYPE 2=ENAMELED BRICK-"GREEN"
3. BRICK TYPE 3=ENAMELED BRICK-"GRANITE MARBLE"
4. BRICK TYPE 4=FACE BRICK

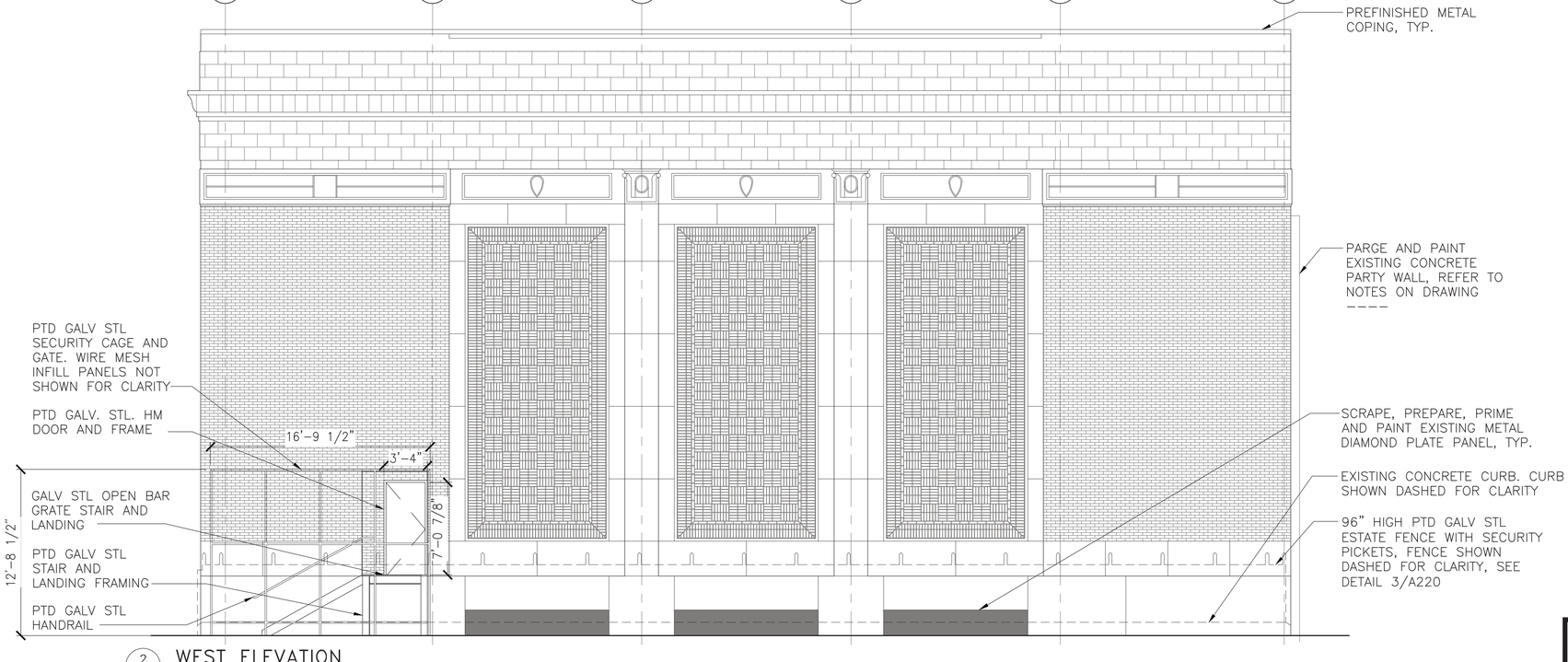

2 WEST ELEVATION
SCALE: 3/16" = 1'-0"
REF: ----, ----, ----

6 4 2 0 6
SCALE: 3/16"=1'0"

50% SUBMISSION
NOT FOR CONSTRUCTION

SOUTHEASTERN PENNSYLVANIA TRANSPORTATION AUTHORITY
EM&C DIVISION
1234 MARKET ST, 13TH FL.
PHILADELPHIA, PA 19107

CHIEF ENGINEER - EM&C
CHIEF ENGINEERING OFFICER - B&B
CHIEF RAIL TRANSIT OFFICER
SYSTEM SAFETY
DIRECTOR OF ENGINEERING - B&B
MANAGER - ARCH / ENGINEERING
PROJECT MANAGER

HDR Engineering, Inc.
Philadelphia, PA

SOWINSKI SULLIVAN

REV	DATE	DESCRIPTION	BY	CKD	APD

DATE PRINTED: 10/21/2025

PARK
SUBWAY/ELEVATED TRAINS
TRACTION POWER SUBSTATION REHABILITATION
ARCHITECTURAL
A216 ELEVATIONS II

SCALE: AS SHOWN	SCALE FACTOR: 1:1
DATE: 08/22/2025	DRAWN BY: AC
	CHECKED BY: ZH
WORK ORDER NO.: 276482	
SHEET NUMBER: **A216**	
DWG. NO.: 17 OF 21	
SHT. NO.: 151 OF 448	
ARCHIVE NO.:	
COMPUTER FILE NO.: 17AN-A216	REV. NO.: -

STATUS: 50% SUBMISSION

C:\PW\WORKING\PITTD\D17317917\AN-A216.DWG

1 DAMAGED LIMESTONE
SCALE: NOT TO SCALE
REF: A211

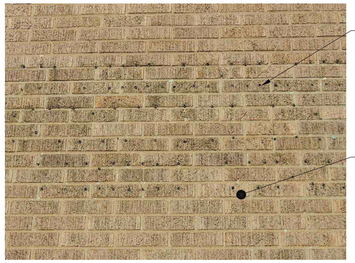

2 ABANDANED PENETRATIONS
SCALE: NOT TO SCALE
REF: A211

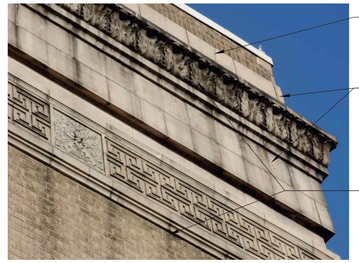

3 CRACKED TERRA COTTA
SCALE: NOT TO SCALE
REF: A211

4 CRACKED TERRA COTTA
SCALE: NOT TO SCALE
REF: A211

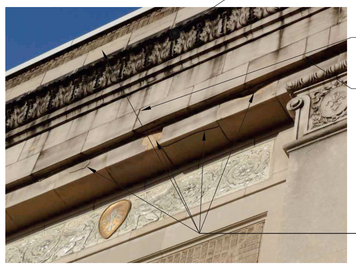

5 DAMAGED TERRA COTTA
SCALE: NOT TO SCALE
REF: A211

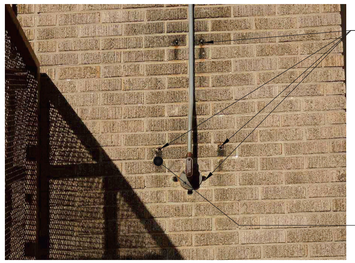

6 ABANDONED PENETRATIONS
SCALE: NOT TO SCALE
REF: A211

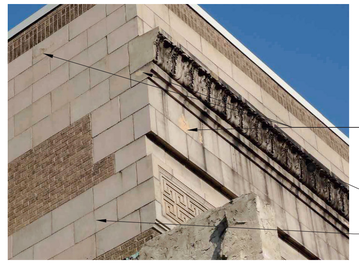

7 CRACKED TERRA COTTA
SCALE: NOT TO SCALE
REF: A211

8 DAMAGED GRANITE
SCALE: NOT TO SCALE
REF: A211

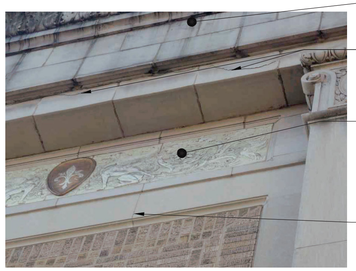

9 DAMAGED TERRA COTTA
SCALE: NOT TO SCALE
REF: A211

10 SPALLED TERRA COTTA
SCALE: NOT TO SCALE
REF: A211

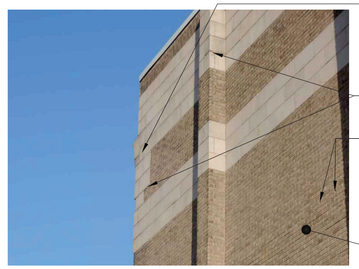

11 SPALLED TERRA COTTA
SCALE: NOT TO SCALE
REF: A212

12 CRACKED BRICK
SCALE: NOT TO SCALE
REF: A212

13 DAMAGED TERRA COTTA
SCALE: NOT TO SCALE
REF: A212

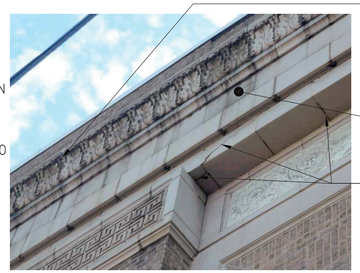

14 DAMAGED TERRA COTTA
SCALE: NOT TO SCALE
REF: A212

15 ABANDONED PENETRATION
SCALE: NOT TO SCALE
REF: A213

16 ABANDONED PIPE
SCALE: NOT TO SCALE
REF: A213

50% SUBMISSION
NOT FOR CONSTRUCTION

C:\PW\WORKING\PITTIDI73117811\7AN-A217.DWG

SOUTHEASTERN PENNSYLVANIA TRANSPORTATION AUTHORITY
EM&C DIVISION
1234 MARKET ST, 13TH FL.
PHILADELPHIA, PA 19107

CHIEF ENGINEER - EM&C
CHIEF ENGINEERING OFFICER - B&B
CHIEF RAIL TRANSIT OFFICER
SYSTEM SAFETY
DIRECTOR OF ENGINEERING - B&B
MANAGER - ARCH / ENGINEERING
PROJECT MANAGER

HDR Engineering, Inc.
Philadelphia, PA
SOWINSKI SULLIVAN

REV	DATE	DESCRIPTION	BY	CK'D	APP'D

DATE PRINTED: 10/21/2025

PARK
SUBWAY/ELEVATED TRAINS
TRACTION POWER SUBSTATION REHABILITATION
ARCHITECTURAL
A217 PHOTO DETAILS I

SCALE: AS SHOWN	SCALE FACTOR: 1:1
DATE: 08/22/2025	DRAWN BY: AC
	CHECKED BY: ZH
WORK ORDER NO.: 276482	
SHEET NUMBER: ----	
DWG. NO.: 18 OF 21	
SHT. NO.: 152 OF 448	
ARCHIVE NO.:	
COMPUTER FILE NO.: 17AN-A217	REV. NO.: -

STATUS: 50% SUBMISSION

CLEAN ENTIRE SURFACE OF WALL, TYP.

REMOVE EXISTING HANDRAIL AND GUARDRAIL

REPAIR DAMAGED BRICK, REFER TO NOTES AND DETAILS ON DRAVING A219

REMOVE EXISTING GATE

1 LOOSE BRICK
SCALE: NOT TO SCALE
REF: A213, A214

REMOVE EXISTING IRON FENCE

DAMAGED CONCRETE, REFER TO NOTES AND DETAILS ON DRAWING A219

2 DAMAGED CURB
SCALE: NOT TO SCALE
REF: A203

CLEAN ENTIRE SURFACE OF WALL, TYP.

SEAL ABANDONED PENETRATIONS, REFER TO DETAIL 5/A219, TYP.

3 ABANDONED PENETRATIONS
SCALE: NOT TO SCALE
REF: A203

SCRAPE, PREPARE, PRIME AND PAINT EXISTING STEEL, TYP.

SCRAPE, PREPARE, PRIME AND PAINT EXISTING CONCRETE, TYP.

CLEAN ENTIRE SURFACE OF WALL, TYP.

SEAL ABANDONED PENETRATIONS, REFER TO DETAIL 5/A219, TYP.

4 ABANDONED PENETRATIONS
SCALE: NOT TO SCALE
REF: A203

SCRAPE, PRIME, PREPARE AND PAINT EXISTING IRON FENCE

DAMAGED CONCRETE, REFER TO NOTES AND DETAILS ON DRAWING A219

5 DAMAGED CURB
SCALE: NOT TO SCALE
REF: A203

DAMAGED CONCRETE, REFER TO NOTES AND DETAILS ON DRAWING A219

6 DAMAGED CONCRETE
SCALE: NOT TO SCALE
REF: A203

OPEN MORTAR JOINT, REFER TO DETAIL 4/A219, TYP.

CRACKED MORTAR JOINT, REFER TO DETAIL 4/A219, TYP.

OPEN MORTAR JOINT, REFER TO DETAIL 4/A219, TYP.

7 CRACKED MORTAR JOINT
SCALE: NOT TO SCALE
REF: A212

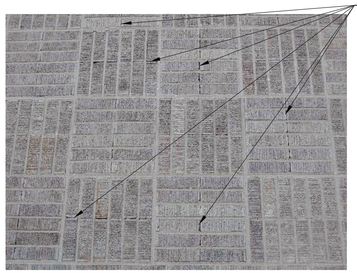

OPEN MORTAR JOINT, REFER TO DETAIL 4/A219, TYP.

8 OPEN MORTAR JOINTS
SCALE: NOT TO SCALE
REF: A212

CLEAN ENTIRE SURFACE OF WALL, TYP.

SEAL ABANDONED PENETRATIONS, REFER TO DETAIL 5/A219, TYP.

REMOVE ALL PAINT FROM EXISTING BRICK, TYP.

SCRAPE, PREPARE, PRIME AND PAINT EXISTING GUARDRAIL, TYP.

CRACKED CONCRETE, REFER TO DETAIL 3/A219, TYP.

9 ABANDONED PENETRATIONS
SCALE: NOT TO SCALE
REF: A214

50% SUBMISSION
NOT FOR CONSTRUCTION

C:\PW\WORKING\PITTD\17311781\17AN-A218.DWG

SOUTHEASTERN PENNSYLVANIA TRANSPORTATION AUTHORITY
EM&C DIVISION
1234 MARKET ST, 13TH FL,
PHILADELPHIA, PA 19107

CHIEF ENGINEER - EM&C
CHIEF ENGINEERING OFFICER - B&B
CHIEF RAIL TRANSIT OFFICER
SYSTEM SAFETY
DIRECTOR OF ENGINEERING - B&B
MANAGER - ARCH / ENGINEERING
PROJECT MANAGER

HDR Engineering, Inc.
Philadelphia, PA

SOWINSKI SULLIVAN

REV	DATE	DESCRIPTION	BY	CKD	APD

DATE PRINTED: 10/21/2025

PARK
SUBWAY/ELEVATED TRAINS
TRACTION POWER SUBSTATION REHABILITATION
ARCHITECTURAL
A218 PHOTO DETAILS II

SCALE: AS SHOWN	SCALE FACTOR: 1:1
DATE: 08/22/2025	DRAWN BY: AC CHECKED BY: ZH
WORK ORDER NO.: 276482	
SHEET NUMBER: ----	
DWG. NO.: 19 OF 21	
SHT. NO.: 153 OF 448	
ARCHIVE NO.:	
COMPUTER FILE NO.: 17AN-A218	REV. NO.: -

STATUS: 50% SUBMISSION

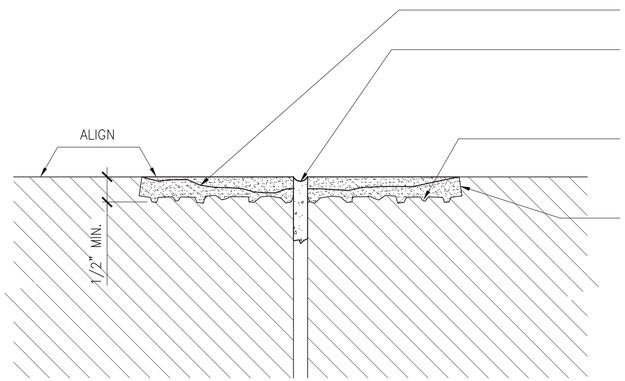

1 A219 MASONRY SPALL REPAIR AT JOINT
SCALE: 6" = 1'-0"

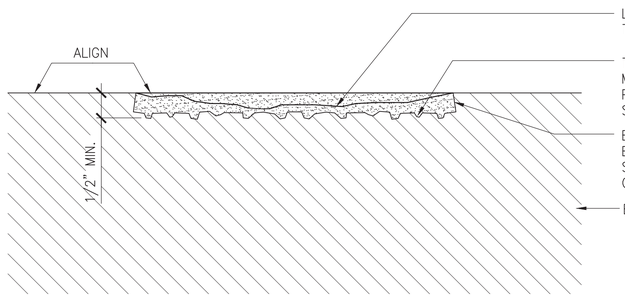

2 A219 MASONRY SPALL REPAIR
SCALE: 6" = 1'-0"

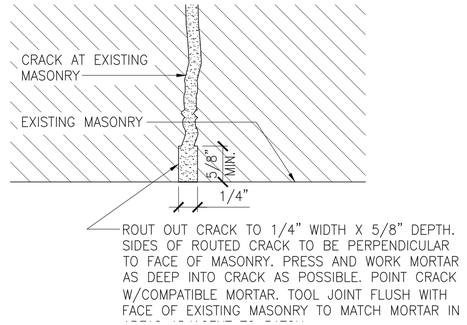

3 A219 MASONRY CRACK REPAIR
SCALE: 6" = 1'-0"

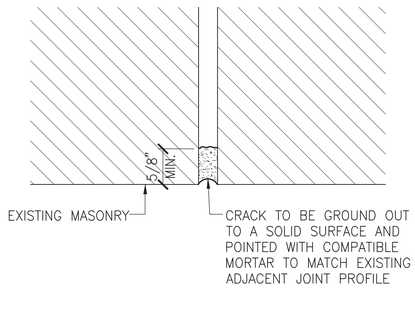

4 A219 MORTAR JOINT REPAIR
SCALE: 6" = 1'-0"

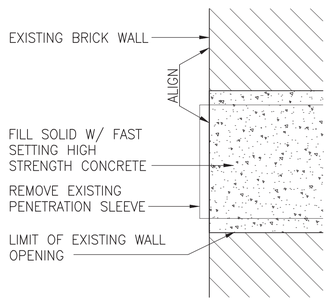

5 A219 ABANDONED PENETRATION REPAIR
SCALE: 6" = 1'-0"

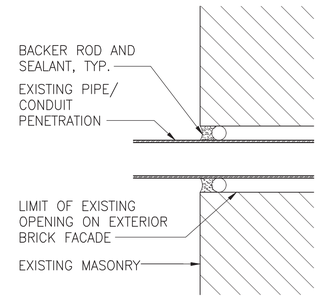

6 A219 PENETRATION REPAIR
SCALE: 6" = 1'-0"

6 3 0 6

SCALE: 6"=1'0"

NOTES:

1. ALL CONDITIONS ARE EXISTING UNLESS NOTED OTHERWISE, TYPICAL.
2. ALL EXISTING DIMENSIONS SHALL BE VERIFIED IN FIELD, TYPICAL.
3. DRAWINGS INDICATE THE VARIOUS TYPES OF REPAIRS REQUIRED AT THE MOST SEVERE LOCATIONS. DRAWINGS SHOW THE INTENT OF THE SCOPE OF WORK BUT DO NOT INCLUDE EVERY SMALL AREA REQUIRING REPAIR, RESTORATION OR REFINISH.
4. PATCHING CEMENT SHALL BE DESIGNED FOR THE REPAIR OF HORIZONTAL, VERTICAL, AND OVERHEAD CONCRETE AND MASONRY SURFACES.
5. MORTAR SHALL BE COMPATIBLE WITH EXISTING MORTAR IN HARDNESS, TEXTURE AND COLOR.

REPAIR NOTES

BRICK:
1. POWERWASH ALL BRICK SURFACES TO REMOVE DIRT AND GRIME.
2. RAKE AND REPOINT ALL AREAS OF DAMAGED MORTAR JOINTS.
3. REMOVE AND RE-INSTALL BRICKS AT SEVERE CRACK LOCATIONS.
4. GRIND OUT CRACK. PREP, PRIME AND PAINT METAL SURFACE OF SHELF ANGLE, REMORTAR.
5. WATERPROOF BRICK WALLS WITH AN APPROVED BREATHABLE, CLEAR SILANE SOLUTION.
6. REPLACE ALL MISSING, CRACKED, BROKEN AND SPALLED BRICK.
7. REPAIR CRACKS IN WALLS.
8. REPAIR ALL CRACKED BRICK, MAXIMUM CRACK WIDTH 1/8". REPLACE BRICK WHERE CRACK EXCEEDS 1/8".
9. REPOINT OPEN MORTAR JOINTS IN EXISTING AREAS AS SHOWN.
10. REMOVE ALL EXISTING PAINT ON BRICK.

WALL PENETRATIONS:
1. REMOVE ABANDONED PROJECTIONS, FILL OPEN HOLES SOLID WITH NON-SHRINK GROUT.
2. AT SMALL PIPE/CONDUIT WALL PENETRATIONS SEAL VOID BETWEEN PIPE AND WALL WITH BACKER ROD AND SEALANT.
3. SEAL PERIMETER OF CONDUIT AND SLEEVES.
4. REMOVE ABANDONED PIPING, FILL OPEN HOLES SOLID WITH NON-SHRINK GROUT.

STEEL LINTELS:
1. EXISTING FAILING LINTELS TO BE REMOVED & REPLACED.
2. RAKE AND RE-CAULK METAL/ MASONRY TIE-IN.
3. PREPARE RUSTED LINTEL TO BARE METAL, PRIME (1 COAT) AND PAINT (2 COATS).
4. REMOVE AND REPLACE DAMAGED LINTELS. COORDINATE WITH STRUCTURAL DRAWINGS.

POWERWASHING, SCRAPING, AND SANDING:
1. TESTING SHALL BE PERFORMED TO DETERMINE PRESENCE OF LEAD. IF LEAD IS PRESENT, ALL INSTANCES SHALL BE REMEDIATED. ALL REMEDIATION WORK SHALL BE PERFORMED IN ACCORDANCE WITH ALL APPLICABLE CODES AND LAWS.
2. PAINTED SURFACES BEING POWERWASHED SHALL BE "CONTAINED" AS PER CODE.
3. DRY SCRAPING OR SANDING OF PAINTED SURFACES MAY ONLY BE PERFORMED WITH EQUIPMENT UTILIZING VACUUM ATTACHMENT W/ HEPA FILTER, AS PER CODE.

ASBESTOS REMOVAL:
1. TESTING SHALL BE PERFORMED TO DETERMINE THE PRESENCE OF ASBESTOS. IF ASBESTOS IS PRESENT, ALL INSTANCES SHALL BE ABATED. ALL ABATEMENT WORK SHALL BE PERFORMED IN ACCORDANCE WITH ALL APPLICABLE CODES AND LAWS.
2. REMOVAL OF NON-FRIABLE ASBESTOS CONTAINING MATERIALS SHALL BE PERFORMED IN SUCH A MANNER THAT THE MATERIALS REMAIN NON-FRIABLE DURING THE RENOVATION. IT IS THE CONTRACTOR'S RESPONSIBILITY TO ENSURE THAT THE MATERIALS ARE REMOVED WITHOUT RENDERING THE MATERIAL FRIABLE. ASBESTOS MATERIALS TO BE PACKAGED AND SEALED AFTER REMOVAL. REFER TO ASBESTOS ABATEMENT SPECIFICATIONS FOR ADDITIONAL INFORMATION ON REMOVAL PROCEDURES.

GRANITE:
1. REMOVE ALL EXISTING PAINT ON GRANITE.
2. POWERWASH ALL GRANITE SURFACES TO REMOVE DIRT AND GRIME.
3. REPAIR CRACKS IN WALLS.
4. REPOINT ALL OPEN MORTAR JOINTS.
5. WATERPROOF GRANITE WITH APPROVED, CLEAR, BREATHABLE SILANE SOLUTION.

LIMESTONE:
1. REMOVE ALL EXISTING PAINT ON LIMESTONE.
2. POWERWASH ALL SURFACES TO CLEAN STONES.
3. REPAIR AND RESTORE ALL SPALLED AND BROKEN LIMESTONE.
4. RAKE AND REPOINT ALL OPEN JOINTS.
5. WATERPROOF LIMESTONE WITH APPROVED, CLEAR, BREATHABLE SILANE SOLUTION.

TERRA COTTA:
1. POWER WASH ALL SURFACES TO REMOVE DIRT AND GRIME.
2. REPAIR AND RESTORE DAMAGED TERRA COTTA.
3. REPLACE TERRA COTTA UNITS WITH SEVERE SPALLING.
4. RAKE AND REPOINT ALL OPEN JOINTS.
5. WATERPROOF TERRA COTTA WITH APPROVED SEALANT PER SPECIFICATION 04212.

POLYCHROME TERRA COTTA:
1. POWER WASH ALL SURFACES TO REMOVE DIRT AND GRIME.
2. MECHANICALLY ABRADE SURFACES TO REMOVE LOOSE GLAZING.
3. FILL IN CRACKS, REBUILD DAMAGED SECTIONS AND CROSS JOINTS WITH THE ELASTORMERIC COATING SYSTEM'S APPROVED PASTE.
4. REMOVE AND REINSTALL SECTIONS THAT HAVE SEPARATED MORE THAN 3/8" FROM EACH OTHER AT HORIZONTAL JOINTS.
5. PRIME SURFACE.
6. APPLY COLOR CAST.

CEMENT PARGE:
1. POWER WASH REPAIR AREA AND SURROUNDING AREA.
2. APPLY CEMENT PARGE EVENLY WITH EXISTING.
3. PAINT TO MATCH EXISTING.

50% SUBMISSION
NOT FOR CONSTRUCTION

SOUTHEASTERN PENNSYLVANIA TRANSPORTATION AUTHORITY
EM&C DIVISION
1234 MARKET ST, 13TH FL.
PHILADELPHIA, PA 19107

CHIEF ENGINEER - EM&C
CHIEF ENGINEERING OFFICER - B&B
CHIEF RAIL TRANSIT OFFICER
SYSTEM SAFETY
DIRECTOR OF ENGINEERING - B&B
MANAGER - ARCH / ENGINEERING
PROJECT MANAGER

HDR Engineering, Inc.
Philadelphia, PA
SOWINSKI SULLIVAN

REV	DATE	DESCRIPTION	BY	CK'D	APD

DATE PRINTED: 10/21/2025

PARK
SUBWAY/ELEVATED TRAINS
TRACTION POWER SUBSTATION REHABILITATION
ARCHITECTURAL
DETAILS I

SCALE: AS SHOWN	SCALE FACTOR: 1:1
DATE: 08/22/2025	DRAWN BY: AC
	CHECKED BY: ZH
WORK ORDER NO.: 276482	
SHEET NUMBER: A219	
DWG. NO.: 20 OF 21	
SHT. NO.: 154 OF 448	
ARCHIVE NO.:	
COMPUTER FILE NO.: 17AN-A219	REV. NO.: -

STATUS: 50% SUBMISSION

C:\PW\WORKING\PITTD\7317917\17AN-A219.DWG

NOTES:

1. ALL CONDITIONS ARE EXISTING UNLESS NOTED OTHERWISE, TYPICAL.
2. ALL EXISTING DIMENSIONS SHALL BE VERIFIED IN FIELD, TYPICAL.
3. DRAWINGS INDICATE THE VARIOUS TYPES OF REPAIRS REQUIRED AT THE MOST SEVERE LOCATIONS. DRAWINGS SHOW THE INTENT OF THE SCOPE OF WORK BUT DO NOT INCLUDE EVERY SMALL AREA REQUIRING REPAIR, RESTORATION OR REFINISH.
4. PATCHING CEMENT SHALL BE DESIGNED FOR THE REPAIR OF HORIZONTAL, VERTICAL, AND OVERHEAD CONCRETE AND MASONRY SURFACES.
5. MORTAR SHALL BE COMPATIBLE WITH EXISTING MORTAR IN HARDNESS, TEXTURE AND COLOR.

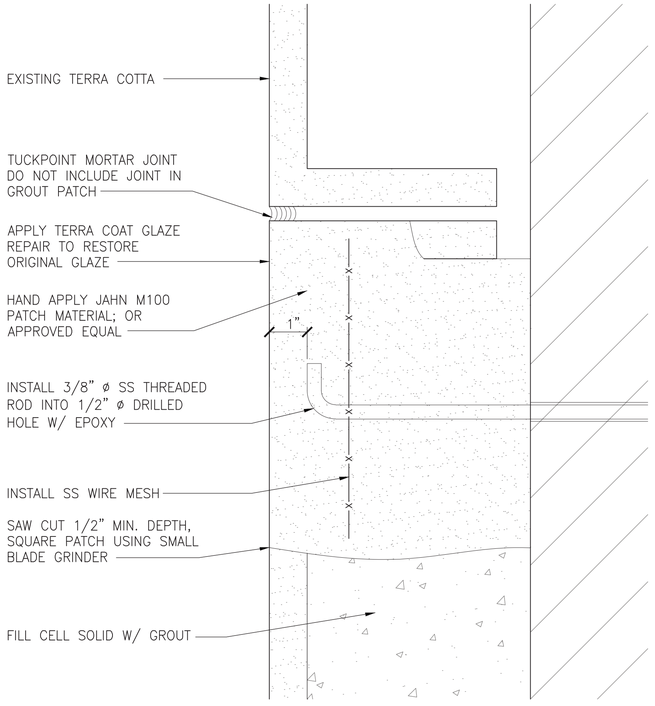

1 A220 GROUT PATCH FOR TERRA COTTA
SCALE: 6" = 1'-0"

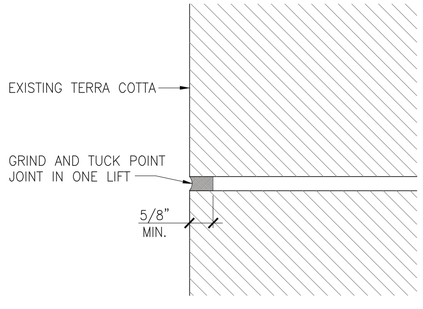

2 A220 POINTING FOR TERRA COTTA
SCALE: 6" = 1'-0"

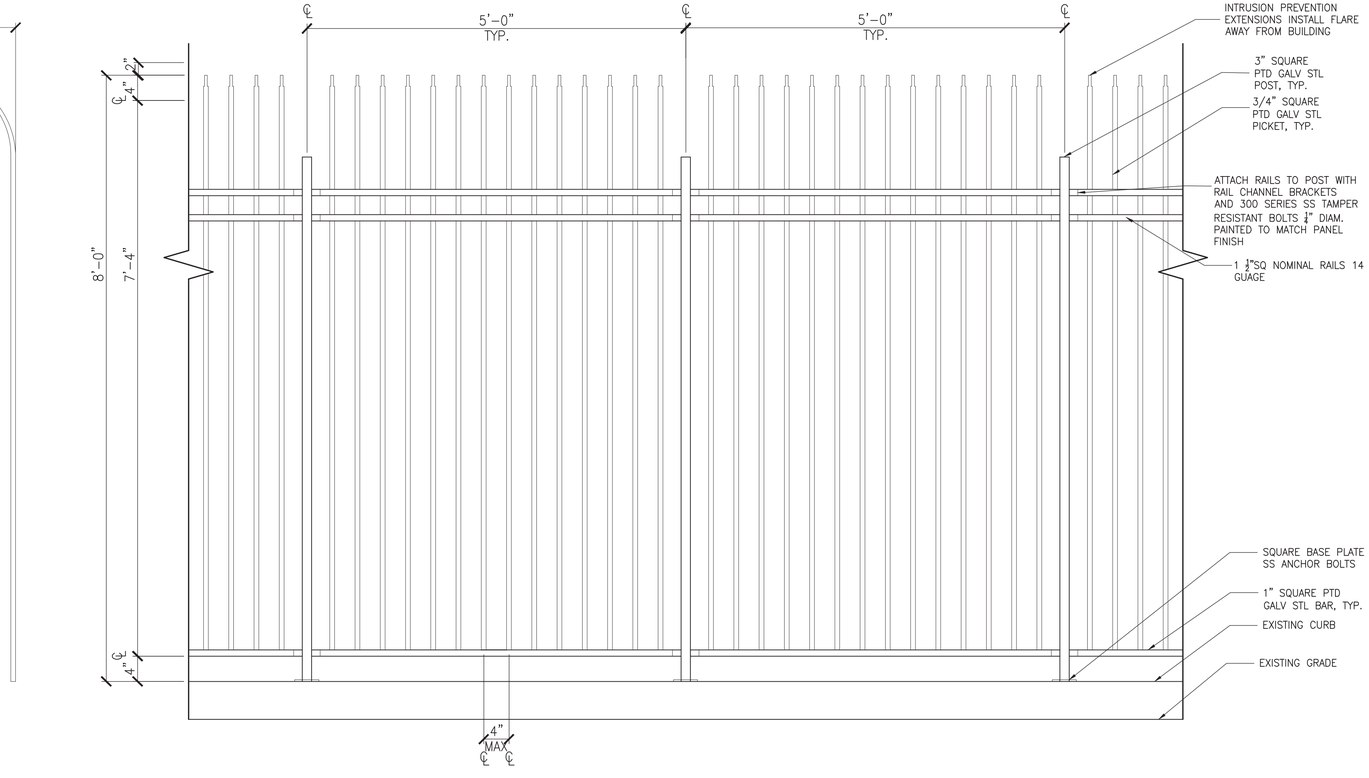

3 A220 TYPICAL FENCE ELEVATION
SCALE: 1" =1'-0"

12" 0 1' 2'
SCALE: 1"=1'0"

6 3 0 6
SCALE: 6"=1'0"

50% SUBMISSION
NOT FOR CONSTRUCTION

SOUTHEASTERN PENNSYLVANIA TRANSPORTATION AUTHORITY
EM&C DIVISION
1234 MARKET ST, 13TH FL, PHILADELPHIA, PA 19107

CHIEF ENGINEER - EM&C
CHIEF ENGINEERING OFFICER - B&B
CHIEF RAIL TRANSIT OFFICER
SYSTEM SAFETY
DIRECTOR OF ENGINEERING - B&B
MANAGER - ARCH / ENGINEERING
PROJECT MANAGER

HDR Engineering, Inc.
Philadelphia, PA
SOWINSKI SULLIVAN

REV	DATE	DESCRIPTION	BY	CK'D	APP'D

DATE PRINTED: 10/21/2025

PARK
SUBWAY/ELEVATED TRAINS
TRACTION POWER SUBSTATION REHABILITATION
ARCHITECTURAL
MISCELLANEOUS DETAILS - SHEET 2

SCALE: AS SHOWN	SCALE FACTOR: 1:1
DATE: 08/22/2025	DRAWN BY: AC
	CHECKED BY: ZH
WORK ORDER NO.: 276482	
SHEET NUMBER: **A220**	
DWG. NO.: 21 OF 21	
SHT. NO.: 155 OF 448	
ARCHIVE NO.:	
COMPUTER FILE NO.: 17AN-A220	REV. NO.: -

STATUS: 50% SUBMISSION

C:\PW\WORKING\PITTID173179174N-A220.DWG

GENERAL:

1. ALL WORK SHALL BE COMPLETED IN ACCORDANCE WITH ALL DRAWINGS AND SPECIFICATIONS CONTAINED HEREIN.
2. ALL WORK RELATED TO THE STAGING, CONSTRUCTION PRACTICES AND SAFETY OF THE PROJECT'S WORKERS AND PROPERTY SHALL BE CONSIDERED MEANS AND METHODS AND SHALL BE COMPLETED BY THE CONTRACTOR IN ACCORDANCE WITH STANDARD INDUSTRY PRACTICE AND ALL CODES AND STANDARDS.
3. ALL DRAWINGS HAVE BEEN PREPARED IN ACCORDANCE WITH THE 2009 INTERNATIONAL BUILDING CODE AS WELL AS ALL REFERENCED STANDARDS CONTAINED THEREIN.
4. EVALUATION AND COMPLIANCE WITH LOADING RESTRICTIONS FOR MEANS AND METHODS OF CONSTRUCTION AS WELL AS STAGING FOR OTHER TRADES ARE THE RESPONSIBILITY OF THE CONTRACTOR.
5. ALL WORK SHALL BE INSPECTED IN ACCORDANCE WITH CHAPTER 17 OF THE REFERENCED BUILDING CODE. SUBMIT ALL REPORTS TO THE SEPTA PROJECT MANAGER FOR REVIEW. AT THE COMPLETION OF THE PROJECT, THE SPECIAL INSPECTION REPORT SHALL BE COMPLETED, SIGNED BY THE SPECIAL INSPECTOR AND SUBMITTED TO THE SEPTA PROJECT MANAGER FOR RECORD PURPOSES.
6. SCALING OF DRAWINGS TO DETERMINE DIMENSIONS OF ELEMENTS IS NOT PERMITTED.
7. ALL HORIZONTAL AND VERTICAL DIMENSIONS CONTAINED ON THE STRUCTURAL DRAWINGS WERE DEVELOPED USING EXISTING SURVEY INFORMATION FOR THE PURPOSE OF THIS PROJECT. ANY DIMENSIONS NOT SHOWN ON THE STRUCTURAL DRAWINGS SHOULD BE COORDINATED WITH THE OTHER DISCIPLINE DRAWINGS.
8. THE STRUCTURAL DOCUMENTS ARE TO BE USED IN COORDINATION WITH THE ELECTRICAL AND CIVIL, DRAWINGS AND SPECIFICATIONS AS WELL AS THOSE OF ALL OTHER DISCIPLINES. ANY DISCREPANCIES SHOULD BE BROUGHT TO THE ATTENTION OF THE SEPTA PROJECT MANAGER PRIOR TO THE COMMENCEMENT OF WORK.
9. DESIGN LOADS FOR THE PROJECT ARE LISTED IN THE LOAD SCHEDULE BELOW:
   a. SNOW LOAD 25 PSF
   b. DEAD LOAD VARIES, SEE INDIVIDUAL DRAWINGS
   c. WIND LOAD PER IBC CODE

EXISTING CONSTRUCTION:

1. THE CONTRACTOR SHALL BE RESPONSIBLE FOR THE DESIGN, COORDINATION AND INSTALLATION OF SHORING AND STABILIZATION OF EXISTING CONSTRUCTION AS REQUIRED TO PERFORM THE WORK CONTAINED IN THE DRAWINGS AND SPECIFICATIONS.
2. DIMENSIONS SHOWN REFERRING TO EXISTING STRUCTURES ARE FOR REFERENCE ONLY. ALL DIMENSIONS RELATED TO EXISTING FRAMING SHOULD BE VERIFIED BY THE CONTRACTOR PRIOR TO THE COMMENCEMENT OF WORK.
3. THE CONTRACTOR SHALL NOTIFY THE SEPTA PROJECT MANAGER OF ANY INFORMATION RELATING TO EXISTING STRUCTURES THAT HAS BEEN UNCOVERED DUE TO DEMOLITION.

FOUNDATIONS:

1. EXCAVATE THE FOUNDATION AREAS TO THE DEPTH AND EXTENT INDICATED ON THE FOUNDATION DRAWINGS. ALL FOOTING AND SLAB SUBGRADES SHALL BE APPROVED IN WRITING BY THE SEPTA PROJECT MANAGER PRIOR TO BACKFILLING. SUBMIT ALL REPORTS TO THE SEPTA PROJECT MANAGER FOR RECORD.
2. BOTTOM OF FOUNDATIONS SHALL BEAR ON SOIL CAPABLE OF SAFELY SUPPORTING 3000 PSF.
3. BOTTOM OF FOOTINGS SHALL BEAR ON:
   a. UNDISTURBED VIRGIN SOIL.
   b. CONTROLLED COMPACTED FILL.
   c. DENSIFIED NATURAL SOIL.
   d. ROCK.
   e. OTHER.
   CAPABLE OF SAFELY SUPPORTING 3000 PSF.
4. BOTTOM OF FOOTING SUBGRADE MUST BE INSPECTED AND APPROVED BY A REGISTERED GEOTECHNICAL ENGINEER BEFORE PLACING ANY CONCRETE FOUNDATIONS. APPROVAL IN WRITING MUST INDICATE THE SOIL IS ADEQUATE TO SAFELY SUSTAIN THE SPECIFIED BEARING PRESSURE. SUBMIT ALL REPORTS TO THE SEPTA PROJECT MANAGER FOR RECORD.
5. BOTTOM OF ALL FOOTINGS SUBJECTED TO FREEZE THAW CONDITIONS SHALL BE A MINIMUM 3 FEET BELOW FINISH GRADE OR TOP OF SLAB ELEVATION WHICHEVER IS LOWER.
6. RETAINING WALLS SHALL BE BACKFILLED AND COMPACTED WITH MATERIAL PRODUCING A MAXIMUM ACTIVE EQUIVALENT FLUID LATERAL EARTH PRESSURE OF 45 PSF.
7. WALLS RETAINING EARTH SHALL NOT BE BACKFILLED UNTIL A MINIMUM OF 70 PERCENT OF SPECIFIED COMPRESSIVE STRENGTH IS ACHIEVED. BASEMENT WALLS SHALL NOT BE BACKFILLED, UNLESS ADEQUATELY BRACED, UNTIL FLOOR SLAB IS IN PLACE AND ATTAINS A MINIMUM OF 70 PERCENT OF SPECIFIED COMPRESSIVE STRENGTH.
8. SITE RETAINING WALLS AND EXPOSED CONCRETE WALLS SHALL HAVE CONTROL JOINTS A MAXIMUM OF 20 FEET ON CENTER UNLESS OTHERWISE NOTED ON THE DRAWINGS. MASONRY OR CONCRETE WALLS WITH INTEGRAL COLUMN PIERS OR PILASTERS SHALL HAVE A FORMED CONTROL JOINT ON ONE SIDE OF EACH PIER ON THE EXPOSED FACE OF THE WALL. JOINTS SHALL BE FILLED WITH SEALANT AS NOTED ON THE ARCHITECTURAL DRAWINGS.
9. UNDERPINNING, SHEETING AND SHORING NOTED ON THE DRAWINGS SHALL BE DESIGNED AND DETAILED BY A REGISTERED PROFESSIONAL ENGINEER WITH A MINIMUM OF 3 YEARS EXPERIENCE IN THE DESIGN OF FOUNDATION SHORING. SUBMIT SIGNED AND SEALED DRAWINGS, CALCULATIONS, AND A STAGING PLAN TO THE SEPTA PROJECT MANAGER FOR REVIEW AND RECORD.

CONCRETE:

1. ALL CONCRETE SHALL BE READY-MIX AND HAVE THE FOLLOWING CHARACTERISTICS:
   a. SLABS ON GRADE:
      1). A MINIMUM COMPRESSIVE STRENGTH OF 4000 PSI AT 28 DAYS.
      2). A MINIMUM OF 520 LBS. OF CEMENT PER CUBIC YARD.
      3). SLUMP (AT POINT OF CONCRETE PLACEMENT) SHALL BE 3 INCH MINIMUM AND 5 INCH MAXIMUM.
   b. FOOTINGS AND FOUNDATION WALLS:
      1). A MINIMUM COMPRESSIVE STRENGTH OF 4000 PSI AT 28 DAYS.
      2). A MINIMUM OF 520 LBS. OF CEMENT PER CUBIC YARD.
      3). SLUMP (AT POINT OF CONCRETE PLACEMENT) SHALL BE 3 INCH MINIMUM AND 5 INCH MAXIMUM.
2. ALL CONCRETE EXPOSED TO EXTERIOR CONDITIONS SHALL HAVE CHARACTERISTICS IN ACCORDANCE WITH ACI BUILDING CODE (ACI 318) AND THE 2012 INTERNATIONAL BUILDING CODE:
   a. MAXIMUM WATER-CEMENTITIOUS MATERIAL RATIO SHALL BE 0.45.
   b. MINIMUM COMPRESSIVE STRENGTH OF 4,000 PSI AT 28 DAYS.
3. ALL CONCRETE WORK SHALL COMPLY WITH THE REQUIREMENTS OF THE LATEST EDITIONS OF THE FOLLOWING CODES AND STANDARDS:
   a. ACI BUILDING CODE (ACI 318).
   b. THE ACI DETAILING MANUAL (SP.66).
4. ALL REINFORCING STEEL SHALL BE GALVANIZED AND SHALL BE MANUFACTURED FROM HIGH STRENGTH BILLET STEEL CONFORMING TO ASTM DESIGNATION A615 GRADE 60. LAP ALL BARS MINIMUM 48 BAR DIAMETERS UNLESS OTHERWISE NOTED OTHERWISE.
5. ALL WWF SHALL BE GALVANIZED AND SHALL BE MANUFACTURED FROM HIGH STRENGTH STEEL CONFORMING TO ASTM A185. LAP ALL WWF A MINIMUM OF 6 INCHES.
6. PLACE TRANSVERSE REINFORCING (SWB) IN BOTTOM LAYER OF CONTINUOUS FOOTINGS. PROVIDE CORNER BARS IN FOOTINGS TO MATCH CONTINUOUS REINFORCEMENT. EXTEND WALL FOOTING REINFORCING INTO COLUMN FOOTINGS A MINIMUM OF 2 FEET.
7. PROVIDE KEYS IN CONCRETE WALLS, PIERS, GRADE BEAMS AND FOOTINGS AT INTERSECTIONS UNLESS NOTED OTHERWISE. PROVIDE CORNER BARS TO MATCH HORIZONTAL REINFORCEMENT AT WALL CORNERS AND TEE INTERSECTIONS.
8. CONCRETE SHALL ACHIEVE A MINIMUM OF 70 PERCENT OF THE DESIGN STRENGTH PRIOR TO STEEL ERECTION. WRITTEN CONFIRMATION OF THIS STRENGTH SHOULD BE SUBMITTED TO THE SEPTA PROJECT MANAGER PRIOR TO THE COMMENCEMENT OF STEEL ERECTION.
9. CONCRETE COVER OVER REINFORCING STEEL SHALL BE IN ACCORDANCE WITH ACI 318.

STEEL:

1. ALL STRUCTURAL STEEL SHALL BE FABRICATED AND ERECTED IN ACCORDANCE WITH THE LATEST AISC CODE. ALL STRUCTURAL STEEL WIDE FLANGE (W) SHAPES SHALL BE ASTM A992 GRADE 50 (V50). ALL STRUCTURAL STEEL S, M, AND HP SHAPES SHALL BE ASTM A572 GRADE 50 (V50). ALL OTHER STRUCTURAL STEEL SHALL BE ASTM A36 UNLESS OTHERWISE NOTED.
2. ALL STEEL SHALL BE THOROUGHLY CLEANED IN ACCORDANCE WITH SSPC. SP3 AND BE TREATED AS FOLLOWS:
   a. HAVE A SHOP COAT OF RUST INHIBITIVE PAINT.
3. ORIENT ALL MILL CAMBER UPWARD DURING FABRICATION AND ERECTION.
4. ALL SHOP AND FIELD WELDING SHALL BE PERFORMED BY WELDERS CERTIFIED, AS DESCRIBED IN THE LATEST EDITION OF THE AMERICAN WELDING SOCIETY'S STANDARD QUALIFICATION PROCEDURE, AWS D1.1, TO PERFORM THE TYPE OF WORK REQUIRED.
5. ALL BOLTS USED FOR THE ANCHORAGE TO CONCRETE AS SPECIFIED ON THE DRAWINGS SHALL CONFORM TO ASTM F1554.
6. ALL STEEL CONNECTIONS SHALL BE BOLTED WITH A MINIMUM OF 3/4" A325N HIGH STRENGTH BOLTS OR WELDED AS DESIGNED BY THE STEEL FABRICATOR.
7. ALL TENSION CONTROLLED BOLTS SHALL CONFORM TO THE REQUIREMENTS OF ASTM F1852 AND ASTM F2280.
8. ALL BRACE CONNECTIONS SHALL BE BOLTED WITH A MINIMUM OF 3/4" DIAMETER A490.SC HIGH STRENGTH BOLTS OR WELDED.
9. ALL ALUMINUM AND STEEL MEMBERS SHALL BE TREATED OR PROPERLY SEPARATED TO PREVENT GALVANIC AND CORROSIVE EFFECTS.
10. ALL STEEL WELDING RODS SHALL BE AS FOLLOWS:
    a. E70XX FOR STEEL CONNECTIONS.
    b. E80XX FOR BRACE CONNECTIONS.
    c. E60XX FOR STEEL TO METAL STUD CONNECTIONS.
11. SUBMIT ALL STEEL SHOP DRAWINGS FOR REVIEW PRIOR TO ANY FABRICATION. SUBMIT CALCULATIONS FOR ALL BRACE CONNECTIONS TO COLUMNS (CALCULATIONS NEED NOT BE SIGNED AND SEALED).
12. STEEL FABRICATOR IS SOLELY RESPONSIBLE FOR COORDINATING WITH THE CONTRACTOR FOR THE PURPOSE OF SURVEYING AND VERIFICATION OF EXISTING CONDITIONS INCLUDING BUT NOT LIMITED TO THE LOCATION, ELEVATION, AND DIMENSIONS OF WALLS AND FRAMING THAT EXIST AT THE TIME OF THE STEEL ERECTION.
13. ALL LINTELS AND SHELF ANGLES SHALL BE PAINTED AND GALVANIZED. ANY POINTS OF WELDING SHALL BE TOUCHED UP IN THE FIELD WITH A ZINC-RICH PAINT BY THE STEEL ERECTOR.
14. ALL EXPOSED STEEL (GANTRY COLUMNS AND WALKWAYS, ETC.) SHALL BE HOT DIP GALVANIZED. ANY POINTS OF WELDING SHALL BE TOUCHED UP IN THE FIELD WITH A ZINC-RICH PAINT BY THE STEEL ERECTOR.

MASONRY:

1. MASONRY UNITS SHALL BE:
   a. NORMAL WEIGHT MASONRY UNITS.
   b. ASTM C90 SOLID OR ASTM C90 HOLLOW GROUTED SOLID BELOW GRADE.
   c. ASTM C90 HOLLOW ABOVE GRADE.
   d. WITH MINIMUM COMPRESSIVE STRENGTH OF 1900 PSI (AVERAGE OF 3 UNITS).
   e. ALL CMU SHALL BE LAID IN A FULL BED OF MORTAR.
   f. CONSTRUCT COLUMN PIERS INTEGRALLY WITH FOUNDATION AND ABOVE GRADE WALLS AND CONTINUE HORIZONTAL WALL REINFORCEMENT THROUGH THE PIER.
   g. GROUT COLUMN PIERS AND WALLS MONOLITHICALLY.
2. FOLLOWING ARE THE BLOCK STRENGTHS REQUIRED:
   a. ASTM C90 SOLID 2000 PSI ON GROSS AREA OF INDIVIDUAL UNITS.
   b. ASTM C90 SOLID 1500 PSI ON NET AREA OF AVERAGE OF 3 UNITS PER ACI.530.
   c. ASTM C90 HOLLOW 1700 PSI ON NET AREA OF INDIVIDUAL UNITS.
3. ALL MORTAR SHALL BE ASTM C270 TYPE S WITH A MINIMUM COMPRESSIVE STRENGTH OF 1800 PSI AT 28 DAYS.
4. ALL MORTAR SHALL BE FIELD OBTAINED MORTAR CUBES TESTED IN ACCORDANCE WITH ASTM C270 AND ASTM C780.
5. GROUT SHALL BE A HIGH SLUMP MIX:
   a. IN ACCORDANCE WITH ASTM C476.
   b. HAVING A MINIMUM COMPRESSIVE STRENGTH OF 3000 PSI.
   c. FROM FIELD OBTAINED TEST PRISMS.
6. ALL CONCRETE MASONRY SHALL BE CONSTRUCTED IN ACCORDANCE WITH THE LATEST EDITION OF THE BUILDING CODE REQUIREMENTS FOR MASONRY STRUCTURES ACI 530/ASCE 5/TMS 402 AND THE SPECIFICATION FOR MASONRY STRUCTURES ACI 530.1/ASCE 6/TMS 602.
7. PROVIDE HOT-DIPPED GALVANIZED TRUSS TYPE HORIZONTAL JOINT REINFORCEMENT, MIN. 9 GA. AT 16" ON CENTER VERTICAL IN ALL MASONRY WALLS. SPACE HORIZONTAL JOINT REINFORCEMENT AT 8 INCHES ON CENTER IN ALL PARAPETS. USE SHOP FABRICATED SPECIAL PIECES AT ALL CORNERS AND TEES.

PAINTING:

1. ALL STEEL SHALL BE CLEANED, PRIMED AND REPAINTED. NOTE EXISTING PAINT MAY BE LEAD BASED. PROPER CONTAINMENT AND DISPOSAL MUST BE PROVIDED.

MINIMUM SIZE OF FILET WELDS	
MATERIAL THICKNESS OF THINNER PART JOINED (IN.)	MINIMUM SIZE OF FILET WELD[a] (IN.)
TO 1/4 INCLUSIVE	1/8
OVER 1/4 TO 1/2	3/16
OVER 1/2 TO 3/4	1/4
OVER 3/4	5/16
[a]LEG DIMENSION OF FILET WELDS. SINGLE-PASS WELDS MUST BE USED	

ABBREVIATIONS

@	AT
ACI	AMERICAN CONCRETE INSTITUTE
ASCE	AMERICAN SOCIETY OF CIVIL ENGINEERS
ASTM	AMERICAN SOCIETY OF TESTING AND MATERIALS
AWS	AMERICAN WELDING SOCIETY
B/	BOTTOM OF
B.O.B.	BOTTOM OF BRIDGE
B.O.B.PL.	BOTTOM OF BASE PLATE
B.O.S.	BOTTOM OF STEEL
CL.	CLEAR
℄	CENTERLINE
CMU	CONCRETE MASONRY UNIT
CONT	CONTINUOUS
CU.	COPPER
DIA., ø	DIAMETER
DWG.	DRAWING
(E), EX	EXISTING
EL	ELEVATION
E.W. E.F.	EACH WAY EACH FACE
F	FAHRENHEIT
F.O.C.	FACE OF COLUMN
FT.	FOOT
G	GRADE
GA.	GAUGE
H	HORIZONTAL
HSS	HOLLOW STRUCTURAL SECTION
HT.	HEIGHT
IBC	INTERNATIONAL BUILDING CODE
I.E.	FOR EXAMPLE
IN.	INCH
LLV	LONG LEG VERTICAL
LBS.	POUNDS
MAX.	MAXIMUM
MIN.	MINIMUM
(MOD)	MODIFIED
NIC	NOT IN CONTRACT
NTS	NOT TO SCALE
O.C.	ON CENTER
OSHA	OCCUPATIONAL SAFETY AND HEALTH ADIMINSTRATION
PL	PLATE
PROJ	PROJECTION
PSF	POUNDS PER SQUARE FOOT
PSI	POUNDS PER SQUARE INCH
PT	POTENTIAL TRANSFORMER
PVC	POLYVINYL CHLORIDE
QTY	QUANTITY
RECT	RECTIFIER
REF	REFERENCE
R/W	RIGHT OF WAY
(S)	SURVEY ELEVATION
SSPC	SOCIETY OF PROTECTIVE COATINGS
SWB	TRANSVERSE REINFORCEMENT
T/FDN	TOP OF FOUNDATION
TMS	THE MASONRY SOCIETY
TOS	TOP OF STEEL
TYP	TYPICAL
UNO	UNLESS NOTED OTHERWISE
V, VERT	VERTICAL
VC	VERTICAL CURVE
W/	WITH
WESS	WAYSIDE ENERGY STORAGE SYSTEM
WP	WORKING POINT
WWF	WELDED WIRE FABRIC
XFMR	TRANSFORMER

NOTE:

1. WORK SITE IS AN ACTIVE TRACTION POWER SUBSTATION (TPSS). ALL WORK REFERENCED ON THESE DRAWINGS SHALL BE PERFORMED DURING AN OUTAGE AND UNDER THE DIRECTION OF SEPTA.
2. FOR MORE GENERAL NOTES SEE DRAWING G105.

50% SUBMISSION
NOT FOR CONSTRUCTION

SOUTHEASTERN PENNSYLVANIA TRANSPORTATION AUTHORITY
EM&C DIVISION
1234 MARKET ST, 13TH FL,
PHILADELPHIA, PA 19107

CHIEF ENGINEER - EM&C
CHIEF ENGINEERING OFFICER - B&B
CHIEF RAIL TRANSIT OFFICER
SYSTEM SAFETY
DIRECTOR OF ENGINEERING - B&B
MANAGER - ARCH / ENGINEERING
PROJECT MANAGER

HDR Engineering, Inc.
Philadelphia, PA
MELIORA DESIGN
Civil, Water Resources, and Structural Engineering
259 MORGAN STREET
PHOENIXVILLE, PA 19460
(610) 933-0123

REV/	DATE	DESCRIPTION	BY	CKD	APD

DATE PRINTED: 10/19/2025

PARK
SUBWAY/ELEVATED TRAINS
TRACTION POWER SUBSTATION REHABILITATION
STRUCTURAL
GENERAL NOTES & ABBREVIATIONS

SCALE: N/A	SCALE FACTOR: -
DATE: 08/22/2025	DRAWN BY: SEB
	CHECKED BY: JWA
WORK ORDER NO.: 276482	
SHEET NUMBER: **S200**	
DWG. NO.: 1 OF 23	
SHT. NO.: 157 OF 452	
ARCHIVE NO.:	
COMPUTER FILE NO.: 17AN-S200	REV. NO.: -

STATUS: 50% SUBMISSION

C:\PW\WORKING\PITTID\17311980\17AN-S200.DWG

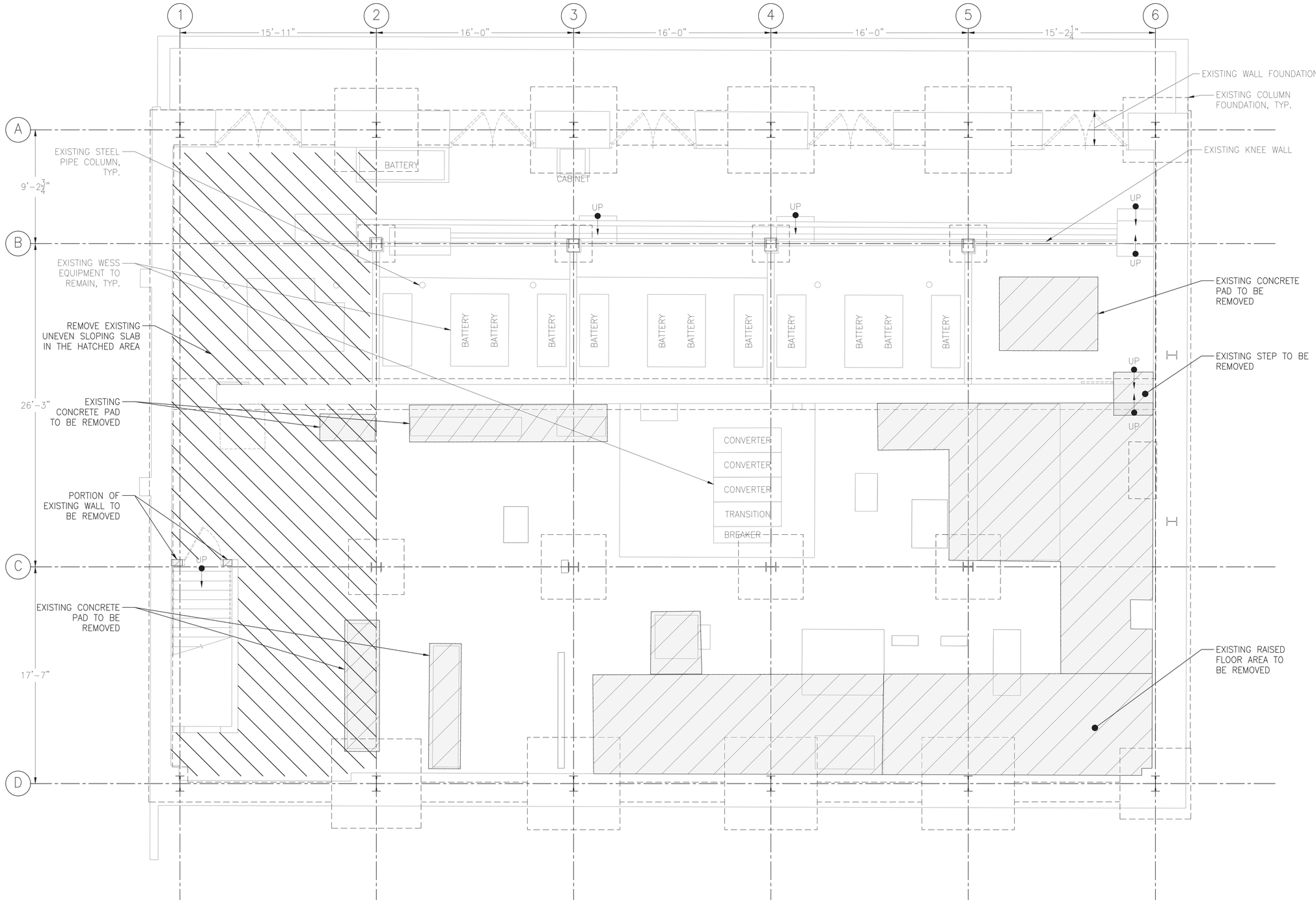

NOTES:
1. FOR GENERAL STRUCTURAL NOTES SEE DRAWING S200.

WORK ON THIS DRAWING:
- SELECT DEMOLITION OF EXISTING CONCRETE EQUIPMENT PADS.
- SELECT DEMOLITION OF EXISTING CONCRETE WALL.
- DEMOLISH STAIRS.

EXISTING CONDITIONS & REMOVAL – BASEMENT

1/4"=1'-0"

4 2 0 4

SCALE: 1/4"=1'-0"

50% SUBMISSION
NOT FOR CONSTRUCTION

C:\PW\WORKING\PITTD\7311980\17AN-S201.DWG

SOUTHEASTERN PENNSYLVANIA TRANSPORTATION AUTHORITY
EM&C DIVISION
1234 MARKET ST, 13TH FL,
PHILADELPHIA, PA 19107

CHIEF ENGINEER - EM&C
CHIEF ENGINEERING OFFICER - B&B
CHIEF RAIL TRANSIT OFFICER
SYSTEM SAFETY
DIRECTOR OF ENGINEERING - B&B
MANAGER - ARCH / ENGINEERING
PROJECT MANAGER

HDR Engineering, Inc.
Philadelphia, PA
MELIORA DESIGN
Civil, Water Resources, and Structural Engineering
259 MORGAN STREET
PHOENIXVILLE, PA 19460
(610) 933-0123

REV	DATE	DESCRIPTION	BY	CKD	APD

DATE PRINTED: 10/19/2025

PARK
SUBWAY/ELEVATED TRAINS
TRACTION POWER SUBSTATION
REHABILITATION
STRUCTURAL
EXISTING CONDITIONS & REMOVAL - BASEMENT

SCALE: 1/4" = 1'-0"	SCALE FACTOR: -
DATE: 08/22/2025	DRAWN BY: SEB
	CHECKED BY: JWA

WORK ORDER NO.: 276482

SHEET NUMBER
S201

DWG. NO.:	2	OF	23
SHT. NO.:	158	OF	452

ARCHIVE NO.:

COMPUTER FILE NO.: 17AN-S201 REV. NO.: -

STATUS: 50% SUBMISSION

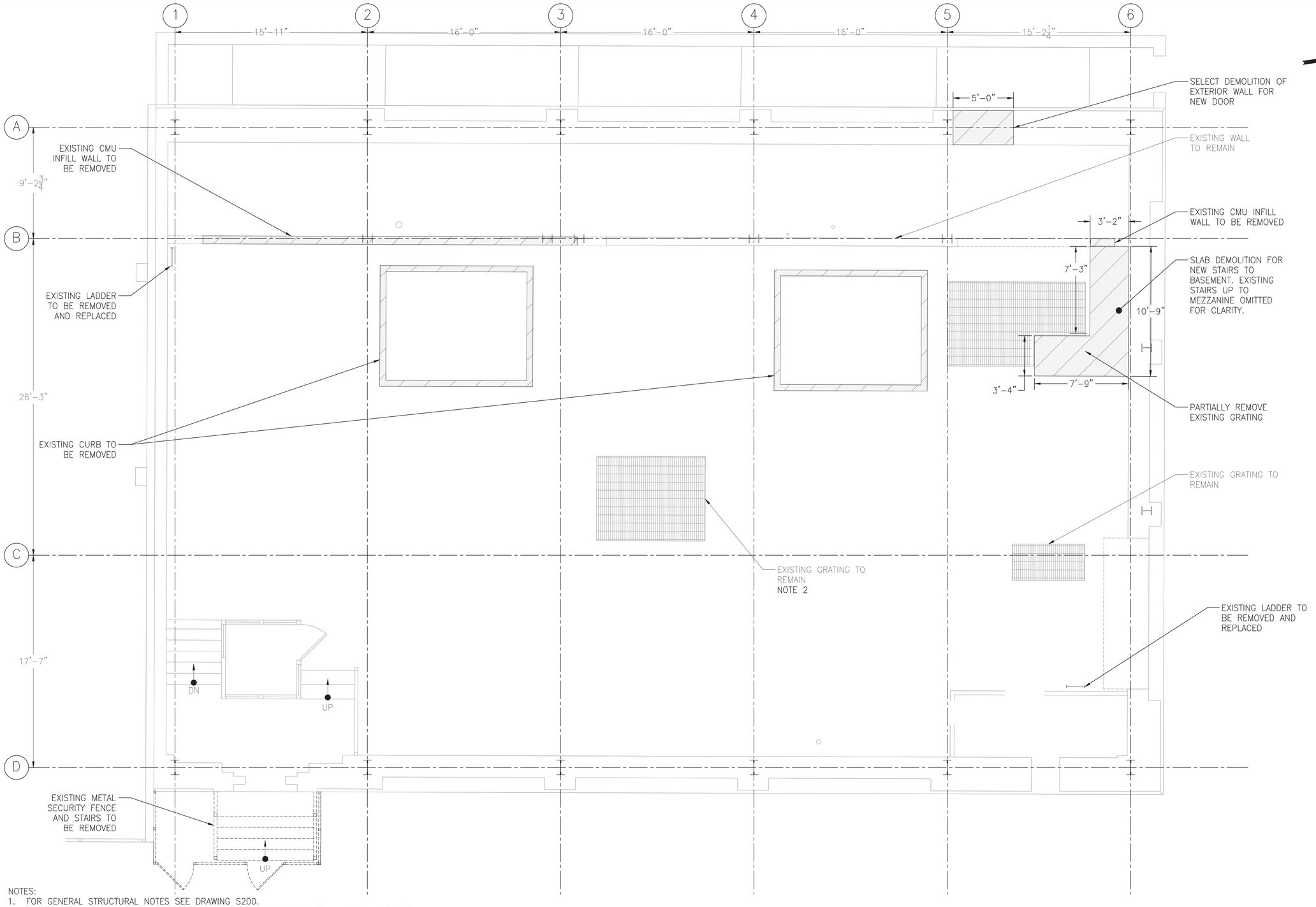

NOTES:
1. FOR GENERAL STRUCTURAL NOTES SEE DRAWING S200.
2. THE CONTRACTOR TO PROVIDE A DESIGN FOR A REDUCED SIZE GRATE IN ORDER FOR THE INSTALLATION OF NEW RECTIFIER TRANSFORMER SET #1 AND INSULATED FLOOR COVERING.

WORK ON THIS DRAWING:
- SELECT DEMOLITION OF EXISTING CONCRETE EQUIPMENT PADS AND CURBS.
- SELECT DEMOLITION OF EXISTING CMU INFILL WALL.
- SELECT DEMOLITION OF EXISTING FLOOR SLAB.
- REMOVE BEAM FOR NEW STAIRS TO BASEMENT.
- DEMOLISH STAIRS.

EXISTING CONDITIONS & REMOVAL – FIRST FLOOR

1/4"=1'-0"

4 2 0 4

SCALE: 1/4"=1'-0"

50% SUBMISSION
NOT FOR CONSTRUCTION

SOUTHEASTERN PENNSYLVANIA TRANSPORTATION AUTHORITY
EM&C DIVISION
1234 MARKET ST, 13TH FL,
PHILADELPHIA, PA 19107

CHIEF ENGINEER - EM&C
CHIEF ENGINEERING OFFICER - B&B
CHIEF RAIL TRANSIT OFFICER
SYSTEM SAFETY
DIRECTOR OF ENGINEERING - B&B
MANAGER - ARCH / ENGINEERING
PROJECT MANAGER

HDR Engineering, Inc.
Philadelphia, PA
MELIORA DESIGN
Civil, Water Resources, and Structural Engineering
259 MORGAN STREET
PHOENIXVILLE, PA 19460
(610) 933-0123

REV/	DATE	DESCRIPTION	BY	CKD	APD

DATE PRINTED: 10/19/2025

PARK
SUBWAY/ELEVATED TRAINS
TRACTION POWER SUBSTATION REHABILITATION
STRUCTURAL
EXISTING CONDITIONS & REMOVAL - FIRST FLOOR

SCALE: 1/4" = 1'-0"	SCALE FACTOR: -
DATE: 08/22/2025	DRAWN BY: SEB
	CHECKED BY: JWA
WORK ORDER NO.: 276482	
SHEET NUMBER: **S202**	
DWG. NO.: 3 OF 23	
SHT. NO.: 159 OF 452	
ARCHIVE NO.:	
COMPUTER FILE NO.: 17AN-S202	REV. NO.: -

STATUS: 50% SUBMISSION

C:\PW\WORKING\PITTID\17311998\17AN-S202.DWG

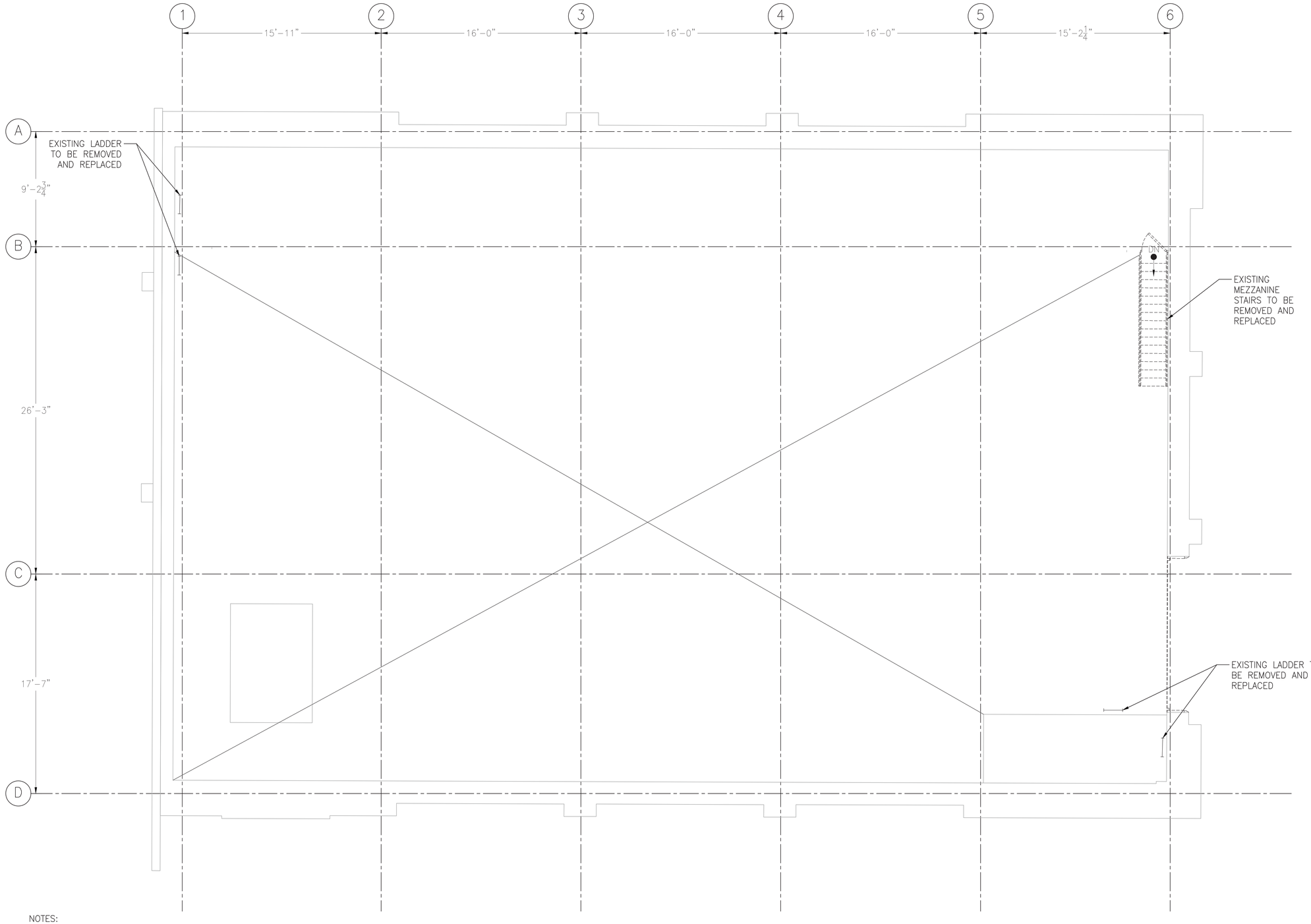

NOTES:
1. FOR GENERAL STRUCTURAL NOTES SEE DRAWING S200.

WORK ON THIS DRAWING:
- LADDER REMOVAL.

EXISTING CONDITIONS & REMOVAL – MEZZANINE

1/4"=1'-0"

4 2 0 4

SCALE: 1/4"=1'-0"

50% SUBMISSION
NOT FOR CONSTRUCTION

SOUTHEASTERN PENNSYLVANIA TRANSPORTATION AUTHORITY
EM&C DIVISION
1234 MARKET ST, 13TH FL,
PHILADELPHIA, PA 19107

CHIEF ENGINEER - EM&C
CHIEF ENGINEERING OFFICER - B&B
CHIEF RAIL TRANSIT OFFICER
SYSTEM SAFETY
DIRECTOR OF ENGINEERING - B&B
MANAGER - ARCH / ENGINEERING
PROJECT MANAGER

HDR Engineering, Inc.
Philadelphia, PA
MELIORA DESIGN
Civil, Water Resources, and Structural Engineering
259 MORGAN STREET
PHOENIXVILLE, PA 19460
(610) 933-0123

REV	DATE	DESCRIPTION	BY	CKD	APD

DATE PRINTED: 10/19/2025

PARK
SUBWAY/ELEVATED TRAINS
TRACTION POWER SUBSTATION REHABILITATION
STRUCTURAL
EXISTING CONDITIONS & REMOVAL - MEZZANINE

SCALE: 1/4" = 1'-0"
SCALE FACTOR: -
DATE: 08/22/2025
DRAWN BY: SEB
CHECKED BY: JWA
WORK ORDER NO.: 276482
SHEET NUMBER: **S203**
DWG. NO.: 4 OF 23
SHT. NO.: 160 OF 452
ARCHIVE NO.:
COMPUTER FILE NO.: 17AN-S203
REV. NO.: -

STATUS: 50% SUBMISSION

C:\PW\WORKING\PITTD173119817AN-S203.DWG

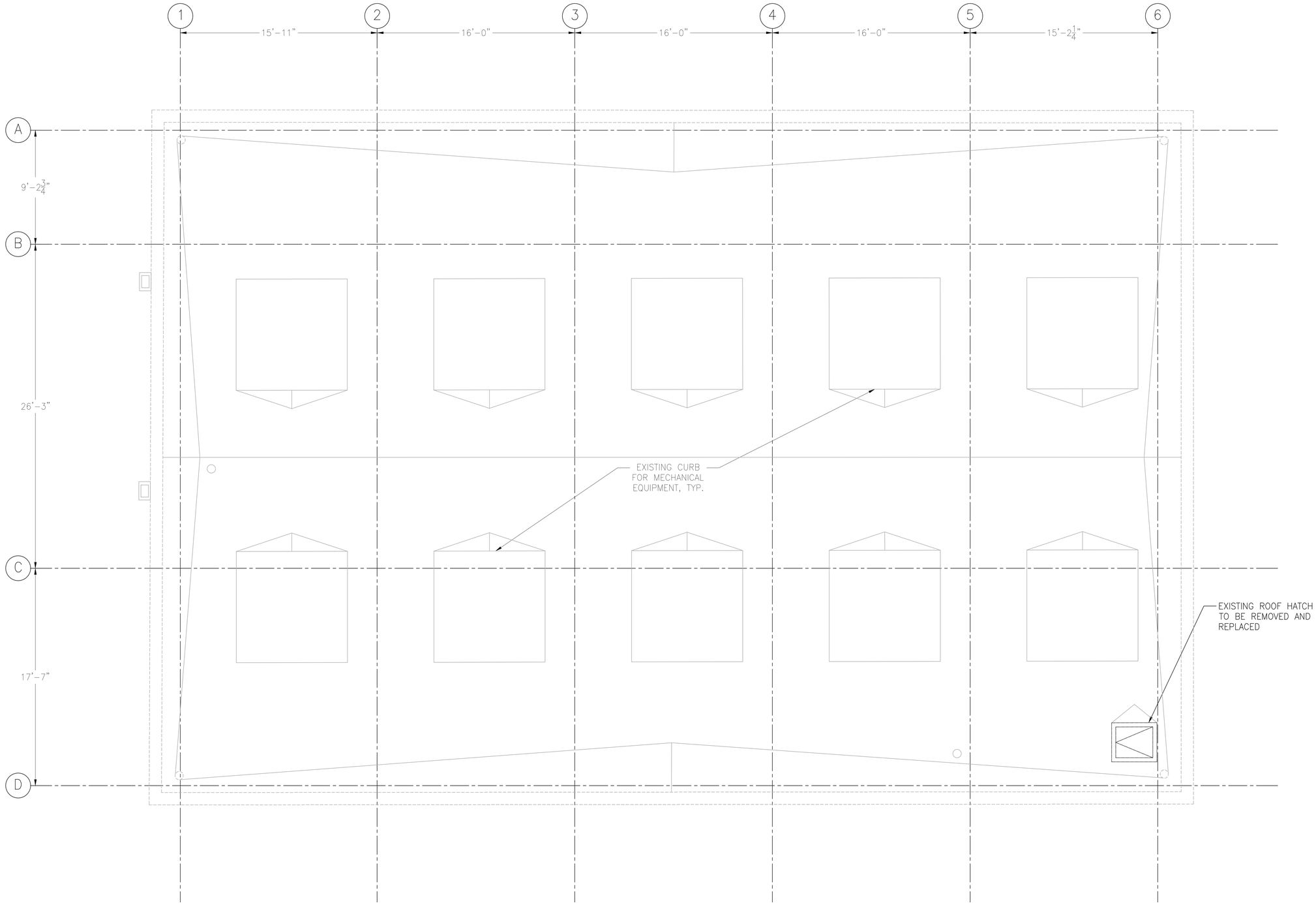

NOTES:
1. FOR GENERAL STRUCTURAL NOTES SEE DRAWING S200.

WORK ON THIS DRAWING:
- REMOVE ROOF HATCH.

EXISTING CONDITIONS & REMOVAL – ROOF

1/4"=1'-0"

4 2 0 4

SCALE: 1/4"=1'-0"

50% SUBMISSION
NOT FOR CONSTRUCTION

C:\PW\WORKING\PITTD\7311981\17AN-S204.DWG

SOUTHEASTERN PENNSYLVANIA TRANSPORTATION AUTHORITY
EM&C DIVISION
1234 MARKET ST, 13TH FL,
PHILADELPHIA, PA 19107

CHIEF ENGINEER - EM&C
CHIEF ENGINEERING OFFICER - B&B
CHIEF RAIL TRANSIT OFFICER
SYSTEM SAFETY
DIRECTOR OF ENGINEERING - B&B
MANAGER - ARCH / ENGINEERING
PROJECT MANAGER

HDR Engineering, Inc.
Philadelphia, PA
MELIORA DESIGN
Civil, Water Resources, and Structural Engineering
259 MORGAN STREET
PHOENIXVILLE, PA 19460
(610) 933-0123

REV	DATE	DESCRIPTION	BY	CKD	APD

DATE PRINTED: 10/19/2025

PARK
SUBWAY/ELEVATED TRAINS
TRACTION POWER SUBSTATION
REHABILITATION
STRUCTURAL
EXISTING CONDITIONS & REMOVAL - ROOF

SCALE: 1/4" = 1'-0"	SCALE FACTOR: -
DATE: 08/22/2025	DRAWN BY: SEB
	CHECKED BY: JWA

WORK ORDER NO.: 276482

SHEET NUMBER
S204

DWG. NO.: 5 OF 23
SHT. NO.: 161 OF 452
ARCHIVE NO.:

COMPUTER FILE NO.: 17AN-S204
REV. NO.: -

STATUS: 50% SUBMISSION

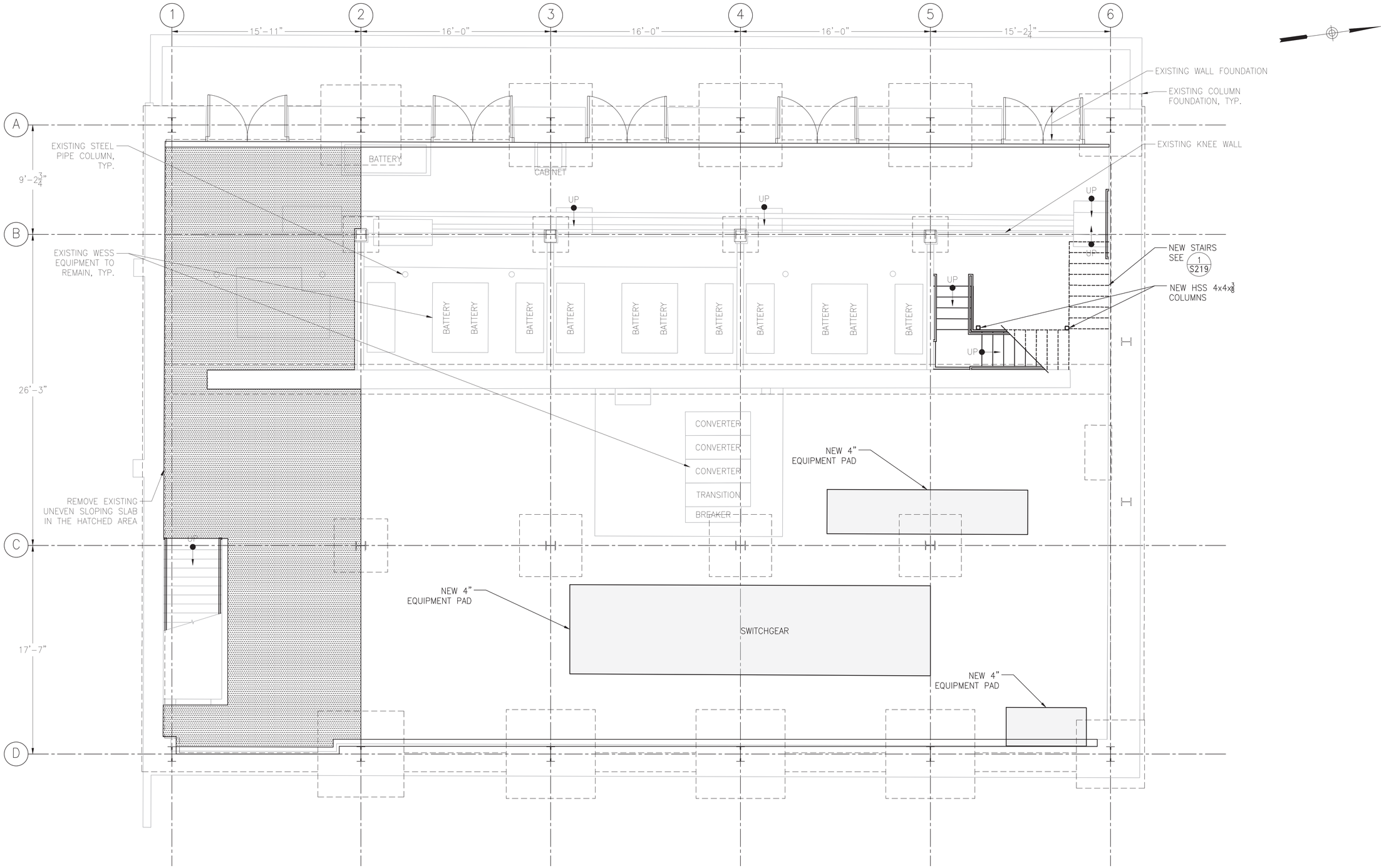

NOTES:
1. FOR GENERAL STRUCTURAL NOTES SEE DRAWING S200.

WORK ON THIS DRAWING:
- NEW CONCRETE EQUIPMENT PADS.
- NEW HEADER FOR WALL OPENING.

PROPOSED BASEMENT PLAN
1/4"=1'-0"

4 2 0 4
SCALE: 1/4"=1'-0"

50% SUBMISSION
NOT FOR CONSTRUCTION

C:\PW\WORKING\PITTD1731198\17AN-S205.DWG

SOUTHEASTERN PENNSYLVANIA TRANSPORTATION AUTHORITY
EM&C DIVISION
1234 MARKET ST, 13TH FL,
PHILADELPHIA, PA 19107

CHIEF ENGINEER - EM&C
CHIEF ENGINEERING OFFICER - B&B
CHIEF RAIL TRANSIT OFFICER
SYSTEM SAFETY
DIRECTOR OF ENGINEERING - B&B
MANAGER - ARCH / ENGINEERING
PROJECT MANAGER

HDR Engineering, Inc.
Philadelphia, PA
MELIORA DESIGN
Civil, Water Resources, and Structural Engineering
259 MORGAN STREET
PHOENIXVILLE, PA 19460
(610) 933-0123

REV	DATE	DESCRIPTION	BY	CKD	APD

DATE PRINTED: 10/19/2025

PARK
SUBWAY/ELEVATED TRAINS
TRACTION POWER SUBSTATION
REHABILITATION
STRUCTURAL
PROPOSED BASEMENT PLAN

SCALE: 1/4" = 1'-0"
SCALE FACTOR: -
DATE: 08/22/2025
DRAWN BY: SEB
CHECKED BY: JWA
WORK ORDER NO.: 276482
SHEET NUMBER: **S205**
DWG. NO.: 6 OF 23
SHT. NO.: 162 OF 452
ARCHIVE NO.:
COMPUTER FILE NO.: 17AN-S205
REV. NO.: -

STATUS: 50% SUBMISSION

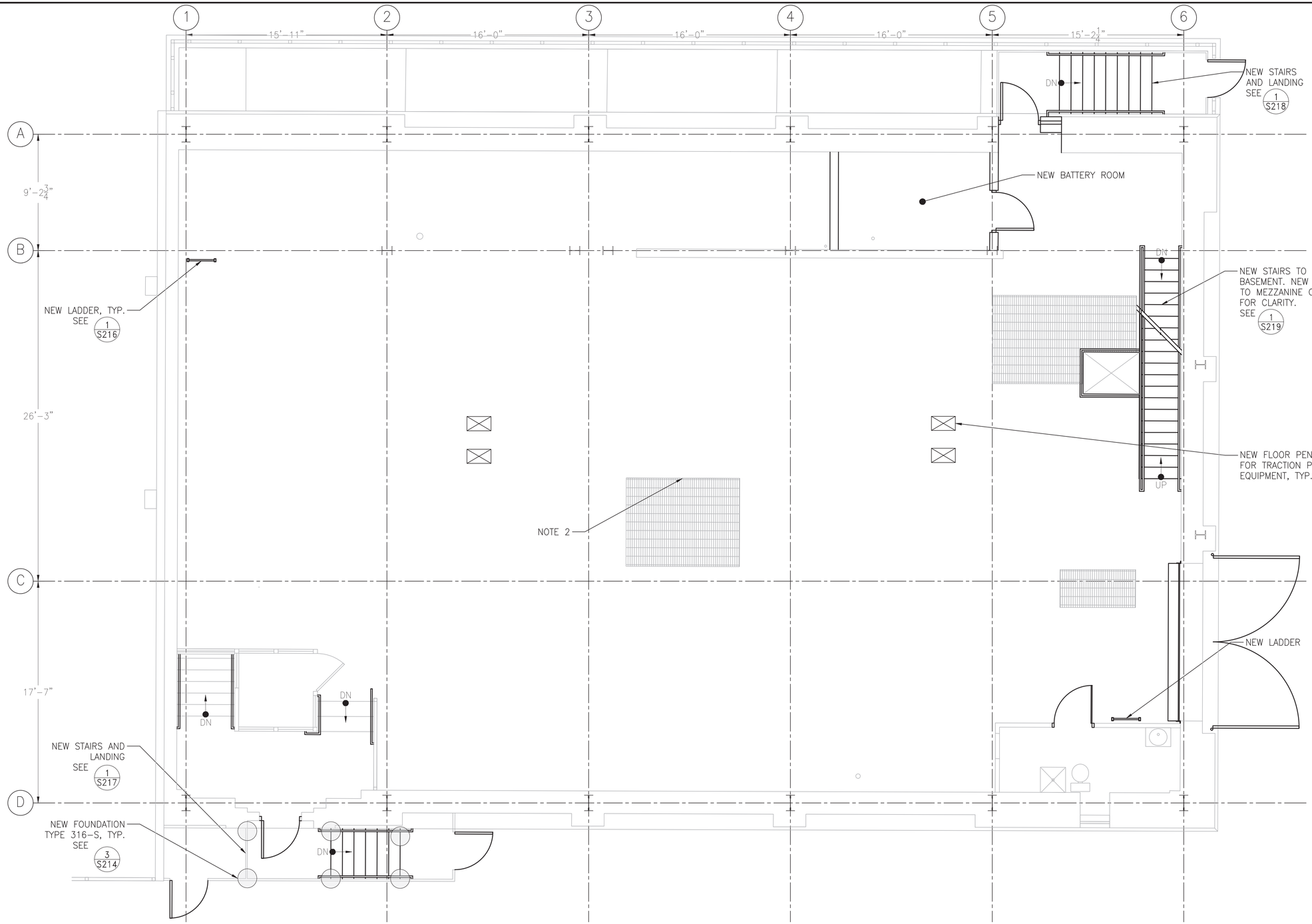

NOTES:
1. FOR GENERAL STRUCTURAL NOTES SEE DRAWING S200.
2. THE CONTRACTOR TO PROVIDE A DESIGN FOR A REDUCED SIZE GRATE IN ORDER FOR THE INSTALLATION OF NEW RECTIFIER TRANSFORMER SET #1 AND INSULATED FLOOR COVERING.

WORK ON THIS DRAWING:
- NEW EXTERIOR STAIRS.
- NEW INTERIOR STAIRS TO BASEMENT.
- NEW STEEL BEAM.
- NEW FLOOR PENETRATIONS.
- NEW LADDERS.

FIRST FLOOR PLAN – PROPOSED
1/4"=1'-0"

4 2 0 4
SCALE: 1/4"=1'-0"

50% SUBMISSION
NOT FOR CONSTRUCTION

SOUTHEASTERN PENNSYLVANIA TRANSPORTATION AUTHORITY
EM&C DIVISION
1234 MARKET ST, 13TH FL,
PHILADELPHIA, PA 19107

CHIEF ENGINEER - EM&C
CHIEF ENGINEERING OFFICER - B&B
CHIEF RAIL TRANSIT OFFICER
SYSTEM SAFETY
DIRECTOR OF ENGINEERING - B&B
MANAGER - ARCH / ENGINEERING
PROJECT MANAGER

HDR Engineering, Inc.
Philadelphia, PA
MELIORA DESIGN
Civil, Water Resources, and Structural Engineering
259 MORGAN STREET
PHOENIXVILLE, PA 19460
(610) 933-0123

REV	DATE	DESCRIPTION	BY	CKD	APD

DATE PRINTED: 10/19/2025

PARK
SUBWAY/ELEVATED TRAINS
TRACTION POWER SUBSTATION REHABILITATION
STRUCTURAL
PROPOSED FIRST FLOOR PLAN

SCALE: 1/4" = 1'-0"	SCALE FACTOR: -
DATE: 08/22/2025	DRAWN BY: SEB
	CHECKED BY: JWA
WORK ORDER NO.: 276482	
SHEET NUMBER: **S206**	
DWG. NO.: 7 OF 23	
SHT. NO.: 163 OF 452	
ARCHIVE NO.:	
COMPUTER FILE NO.: 17AN-S206	REV. NO.: -

STATUS: 50% SUBMISSION

C:\PW\WORKING\PITTD\7311981\17AN-S206.DWG

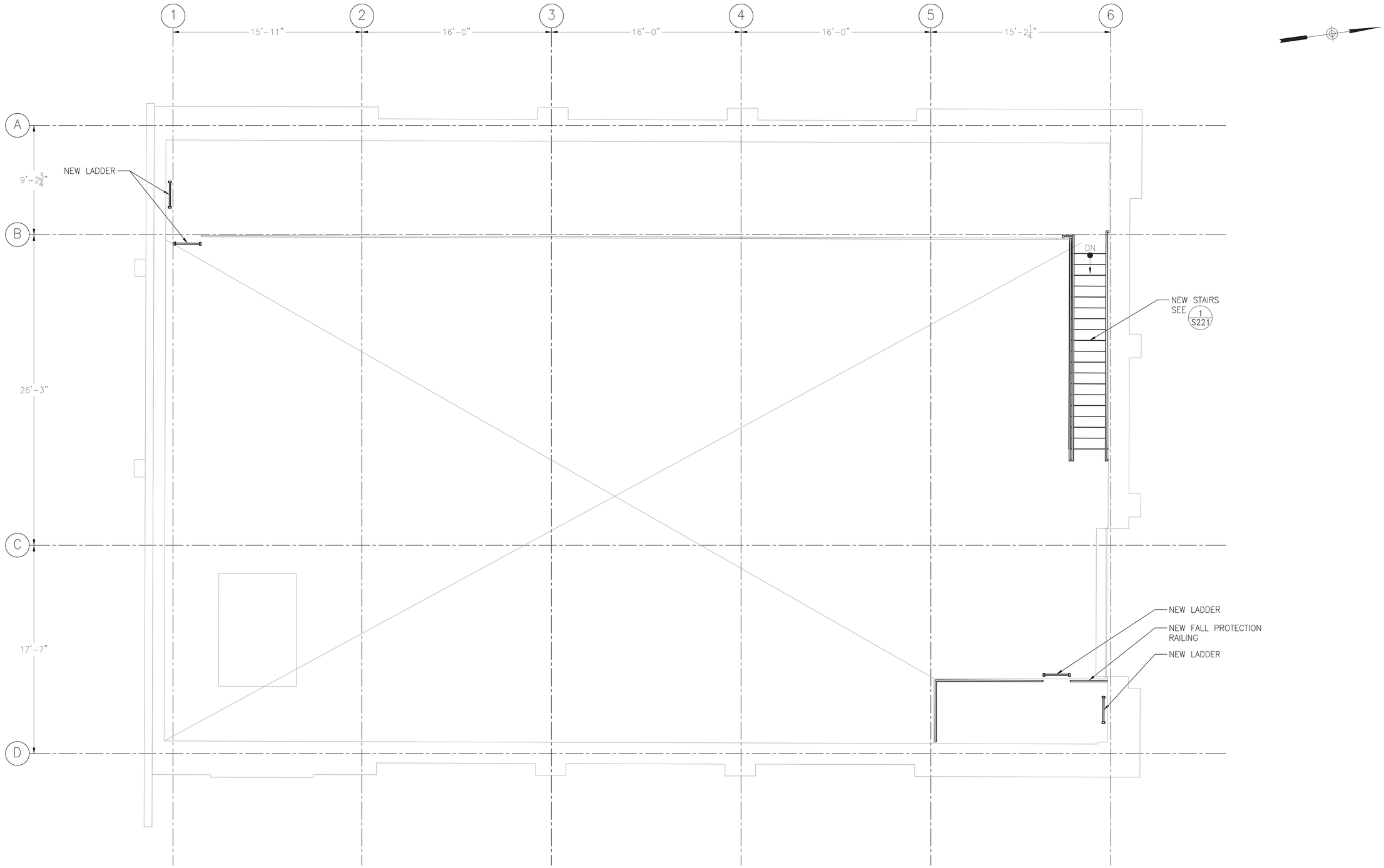

NOTES:
1. FOR GENERAL STRUCTURAL NOTES SEE DRAWING S200.

WORK ON THIS DRAWING:
- NEW LADDERS.
- NEW STAIRS.

PROPOSED MEZZANINE PLAN
1/4"=1'-0"

4 2 0 4

SCALE: 1/4"=1'-0"

50% SUBMISSION
NOT FOR CONSTRUCTION

SOUTHEASTERN PENNSYLVANIA TRANSPORTATION AUTHORITY
EM&C DIVISION
1234 MARKET ST, 13TH FL,
PHILADELPHIA, PA 19107

CHIEF ENGINEER - EM&C
CHIEF ENGINEERING OFFICER - B&B
CHIEF RAIL TRANSIT OFFICER
SYSTEM SAFETY
DIRECTOR OF ENGINEERING - B&B
MANAGER - ARCH / ENGINEERING
PROJECT MANAGER

HDR Engineering, Inc.
Philadelphia, PA
MELIORA DESIGN
Civil, Water Resources, and Structural Engineering
259 MORGAN STREET
PHOENIXVILLE, PA 19460
(610) 933-0123

REV	DATE	DESCRIPTION	BY	CKD	APD

DATE PRINTED: 10/19/2025

PARK
SUBWAY/ELEVATED TRAINS
TRACTION POWER SUBSTATION REHABILITATION
STRUCTURAL
PROPOSED MEZZANINE PLAN

SCALE: 1/4" = 1'-0"	SCALE FACTOR: -
DATE: 08/22/2025	DRAWN BY: SEB
	CHECKED BY: JWA

WORK ORDER NO.: 276482

SHEET NUMBER
S207

DWG. NO.:	8	OF	23
SHT. NO.:	164	OF	452

ARCHIVE NO.:

COMPUTER FILE NO.: 17AN-S207
REV. NO.: -

STATUS: 50% SUBMISSION

C:\PWWORKING\PITTID\7319817AN-S207.DWG

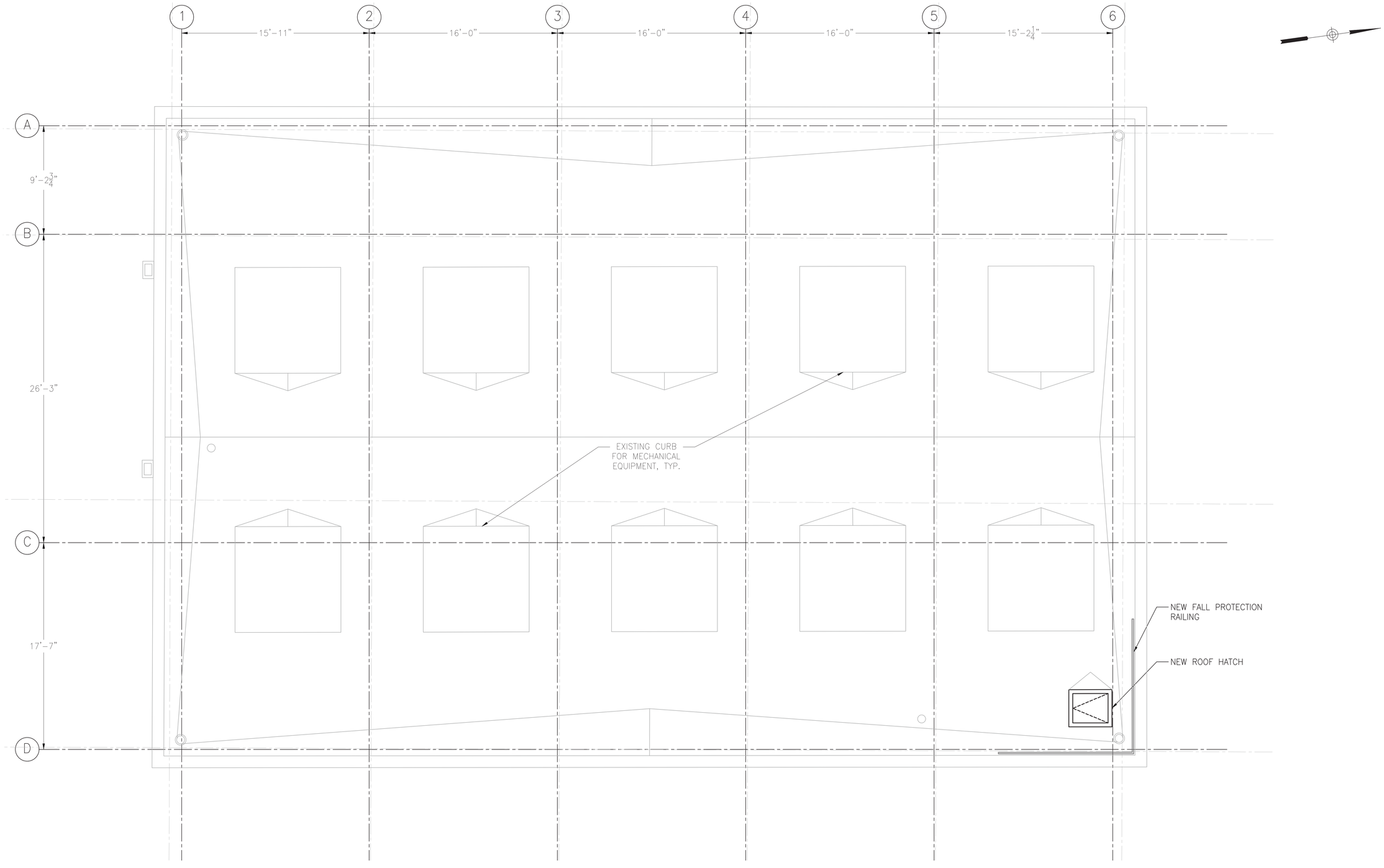

NOTES:
1. FOR GENERAL STRUCTURAL NOTES SEE DRAWING S200.

WORK ON THIS DRAWING:
- NEW FALL PROTECTION AT ROOF HATCH.
- NEW ROOF HATCH.

PROPOSED ROOF PLAN
1/4"=1'-0"

4 2 0 4

SCALE: 1/4"=1'-0"

50% SUBMISSION
NOT FOR CONSTRUCTION

C:\PW\WORKING\PITTD\17311981\17AN-S208.DWG

SOUTHEASTERN PENNSYLVANIA TRANSPORTATION AUTHORITY
EM&C DIVISION
1234 MARKET ST, 13TH FL,
PHILADELPHIA, PA 19107

CHIEF ENGINEER - EM&C
CHIEF ENGINEERING OFFICER - B&B
CHIEF RAIL TRANSIT OFFICER
SYSTEM SAFETY
DIRECTOR OF ENGINEERING - B&B
MANAGER - ARCH / ENGINEERING
PROJECT MANAGER

HDR Engineering, Inc.
Philadelphia, PA
MELIORA DESIGN
Civil, Water Resources, and Structural Engineering
259 MORGAN STREET
PHOENIXVILLE, PA 19460
(610) 933-0123

REV	DATE	DESCRIPTION	BY	CKD	APD

DATE PRINTED: 10/19/2025

PARK
SUBWAY/ELEVATED TRAINS
TRACTION POWER SUBSTATION REHABILITATION
STRUCTURAL
PROPOSED ROOF PLAN

SCALE: 1/4" = 1'-0"	SCALE FACTOR: -
DATE: 08/22/2025	DRAWN BY: SEB
	CHECKED BY: JWA

WORK ORDER NO.: 276482

SHEET NUMBER
S208

DWG. NO.:	9	OF	23
SHT. NO.:	165	OF	452

ARCHIVE NO.:

COMPUTER FILE NO.: 17AN-S208 REV. NO: -

STATUS: 50% SUBMISSION

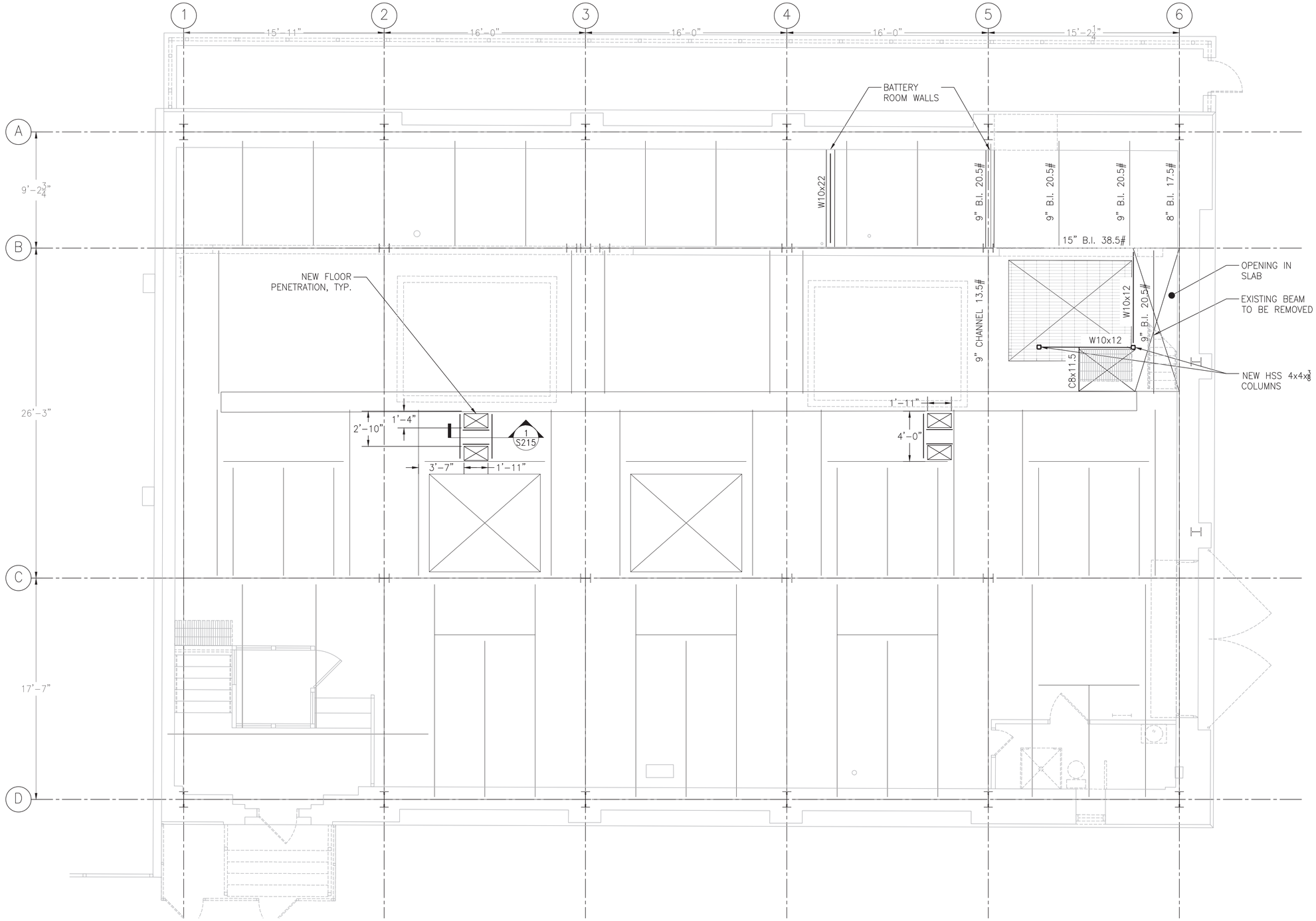

NOTES:
1. FOR GENERAL STRUCTURAL NOTES SEE DRAWING S200.

WORK ON THIS DRAWING:
- REMOVE EXISTING BEAM.
- NEW STEEL BEAMS.
- NEW COLUMNS.

FIRST FLOOR FRAMING PLAN
¼"=1'-0"

4 2 0 4

SCALE: 1/4"=1'-0"

50% SUBMISSION
NOT FOR CONSTRUCTION

C:\PWWORKING\PITTID\73119817\AN-S209.DWG

SOUTHEASTERN PENNSYLVANIA TRANSPORTATION AUTHORITY
EM&C DIVISION
1234 MARKET ST, 13TH FL,
PHILADELPHIA, PA 19107

CHIEF ENGINEER - EM&C
CHIEF ENGINEERING OFFICER - B&B
CHIEF RAIL TRANSIT OFFICER
SYSTEM SAFETY
DIRECTOR OF ENGINEERING - B&B
MANAGER - ARCH / ENGINEERING
PROJECT MANAGER

HDR
HDR Engineering, Inc.
Philadelphia, PA
MELIORA DESIGN
Civil, Water Resources, and Structural Engineering
259 MORGAN STREET
PHOENIXVILLE, PA 19460
(610) 933-0123

REV	DATE	DESCRIPTION	BY	CKD	APD

DATE PRINTED: 10/19/2025

PARK
SUBWAY/ELEVATED TRAINS
TRACTION POWER SUBSTATION REHABILITATION
STRUCTURAL
FIRST FLOOR FRAMING PLAN

SCALE: 1/4" = 1'-0"
SCALE FACTOR: -
DATE: 08/22/2025
DRAWN BY: SEB
CHECKED BY: JWA
WORK ORDER NO.: 276482
SHEET NUMBER
S209
DWG. NO.: 10 OF 23
SHT. NO.: 166 OF 452
ARCHIVE NO.:
COMPUTER FILE NO.: 17AN-S209
REV. NO.: -

STATUS: 50% SUBMISSION

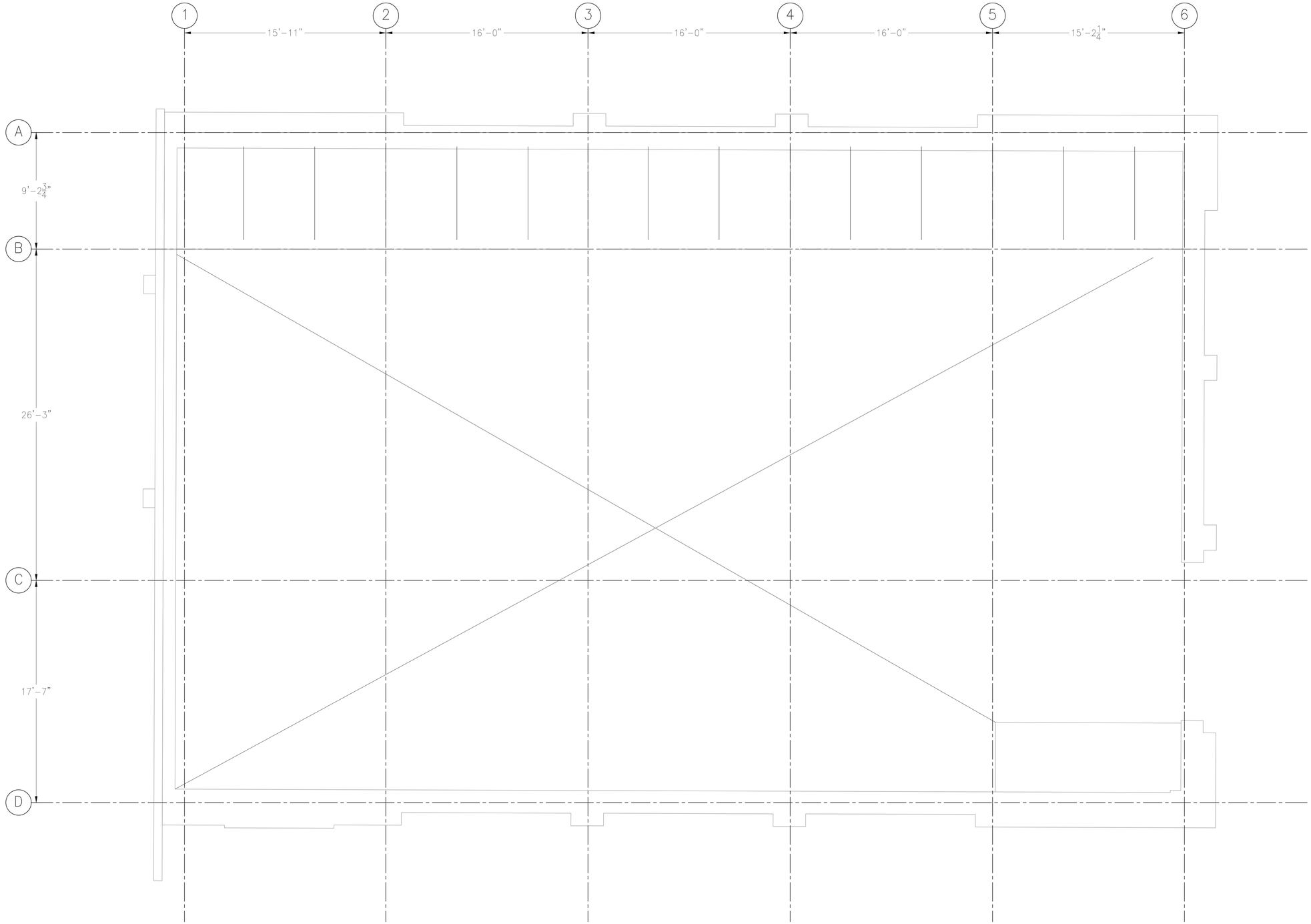

NOTES:
1. FOR GENERAL STRUCTURAL NOTES SEE DRAWING S200.

WORK ON THIS DRAWING:
- NONE.

MEZZANINE FRAMING PLAN
1/4"=1'-0"

4 2 0 4

SCALE: 1/4"=1'-0"

50% SUBMISSION
NOT FOR CONSTRUCTION

C:\PWWORKING\PITTD1731198117AN-S210.DWG

SOUTHEASTERN PENNSYLVANIA TRANSPORTATION AUTHORITY
EM&C DIVISION
1234 MARKET ST, 13TH FL,
PHILADELPHIA, PA 19107

CHIEF ENGINEER - EM&C
CHIEF ENGINEERING OFFICER - B&B
CHIEF RAIL TRANSIT OFFICER
SYSTEM SAFETY
DIRECTOR OF ENGINEERING - B&B
MANAGER - ARCH / ENGINEERING
PROJECT MANAGER

HDR Engineering, Inc.
Philadelphia, PA
MELIORA DESIGN
Civil, Water Resources, and Structural Engineering
259 MORGAN STREET
PHOENIXVILLE, PA 19460
(610) 933-0123

REV	DATE	DESCRIPTION	BY	CKD	APD

DATE PRINTED: 10/19/2025

PARK
SUBWAY/ELEVATED TRAINS
TRACTION POWER SUBSTATION REHABILITATION
STRUCTURAL
MEZZANINE FRAMING PLAN

SCALE: 1/4" = 1'-0"	SCALE FACTOR: -
DATE: 08/22/2025	DRAWN BY: SEB
	CHECKED BY: JWA

WORK ORDER NO.: 276482

SHEET NUMBER
S210

DWG. NO.: 11 OF 23
SHT. NO.: 167 OF 452
ARCHIVE NO.:

COMPUTER FILE NO.: 17AN-S210
REV. NO.: -

STATUS: 50% SUBMISSION

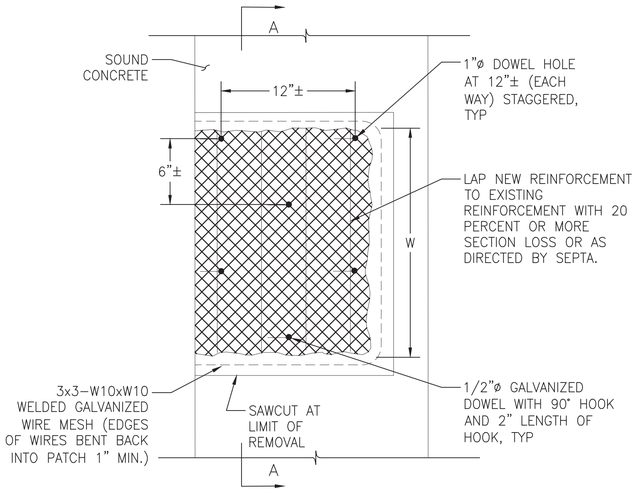

ELEVATION VIEW

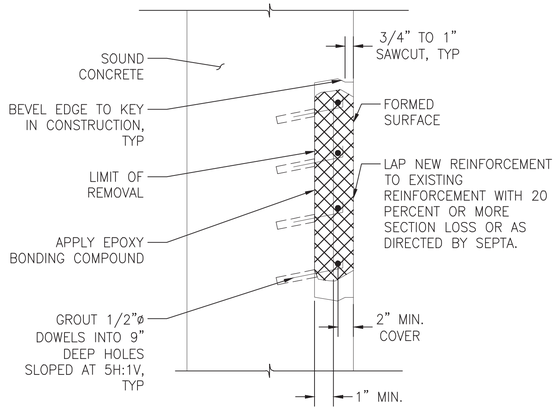

SECTION A–A
NEW REINFORCEMENT

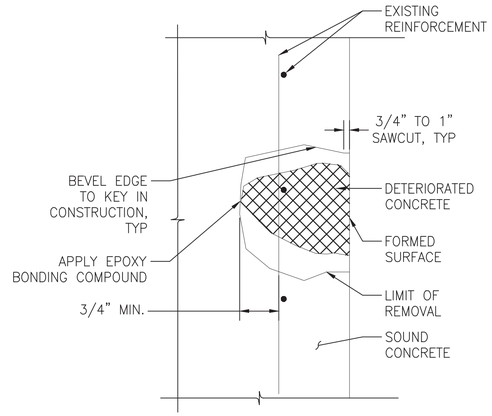

SECTION A–A
EXISTING REINFORCEMENT

NOTE:

REPAIR TYPE 2 IS USED WHEN DEPTH OF DETERIORATED CONCRETE IS GREATER THAN 3/4" AND EXISTING REINFORCEMENT SPACED ≤ 12" ON CENTERS. OTHERWISE USE REPAIR TYPE 2A.

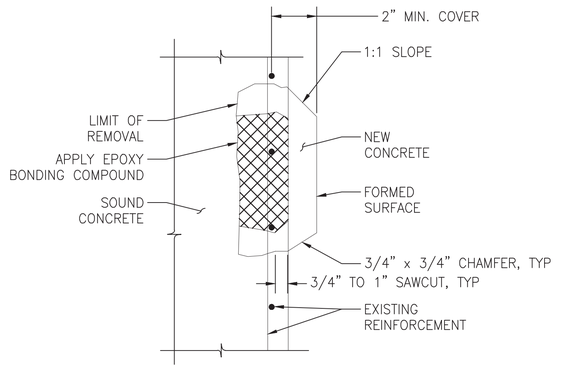

SECTION A–A
BLISTER DETAIL

NOTE:

CONCRETE REPAIR TYPE 2 DETAIL FOR AREAS WITH EXISTING REINFORCEMENT HAVING LESS THAN 2" OF COVER.

1 S211 CONCRETE REPAIR TYPE 2
SCALE: N.T.S.

REINFORCED CONCRETE REPAIR TYPE 2 NOTES:

1. SQUARE OFF DETERIORATED CONCRETE TO SOUND CONCRETE WITH A SAWCUT OF 3/4" MINIMUM TO 1" MAXIMUM BUT NOT TO THE DEPTH OF THE REINFORCEMENT STEEL. BACK BEVEL EDGE BEYOND SAWCUT.
2. USE HAND TOOLS TO REMOVE ALL LOOSE AND DELAMINATED CONCRETE THAT PROVIDES A SOUND BOND BETWEEN EXISTING CONCRETE AND NEW CONCRETE. PNEUMATIC HAMMERS WITH IMPACT RATINGS OF 3 FT–LBS OR LESS MAY BE USED IF REQUIRED.
3. IF DETERIORATED CONCRETE EXTENDS BEYOND THE PRIMARY REINFORCEMENT, REMOVE THE CONCRETE TO AT LEAST 3/4" BEHIND THE REINFORCEMENT.
4. APPLY AN EPOXY BONDING COMPOUND BETWEEN THE EXISTING AND THE NEW CLASS A CEMENT CONCRETE.
5. "W" REPRESENTS LEAST DIMENSION OF DETERIORATED CONCRETE.
6. USE DOWELS ONLY WHEN "W" DIMENSION OF DETERIORATED CONCRETE IS GREATER THAN 2'–0" AND NEW OR EXISTING REINFORCEMENT CANNOT ADEQUATELY BE DEVELOPED BY LAPPING WITH EXISTING REINFORCEMENT.
7. USE A PACHOMETER TO LOCATE EXISTING REINFORCEMENT WHEN DRILLING DOWEL HOLES TO AVOID DRILLING THRU EXISTING BARS.
8. AN APPROVED EPOXY ANCHORING SYSTEM IN 90° HOLES MAY REPLACE GROUT IN SLOPED HOLES. USE A 6" MINIMUM EMBEDMENT AND IN ACCORDANCE WITH THE MANUFACTURER'S INSTRUCTIONS.
9. A #4 DEFORMED REINFORCEMENT BENT "L" BAR MAY REPLACE THE 1/2" DIAMETER DOWEL HOOK.
10. ALTERNATE WIRE MESH MAY BE SUBSTITUTED FOR 3x3–W10xW10, PROVIDED WIRE SPACING DOES NOT EXCEED 4" AND AN EQUIVALENT STEEL AREA IS PROVIDED. NEW REINFORCEMENT BARS MAY BE OMITTED IF WIRE MESH STEEL AREA EXCEEDS EXISTING REINFORCEMENT.
11. CLEAN EXISTING REINFORCEMENT BY MECHANICAL MEANS.
12. LAP EQUIVALENT NEW REINFORCEMENT TO THE EXISTING REINFORCEMENT AS DIRECTED.
13. REINFORCEMENT BARS TO BE GALVANIZED.

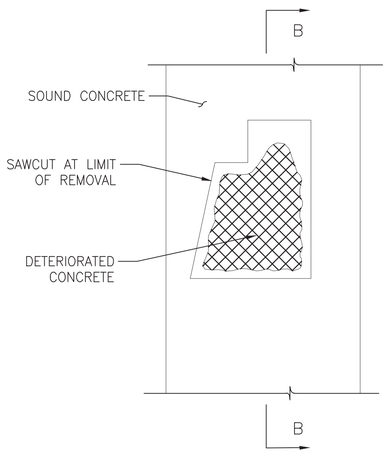

ELEVATION VIEW

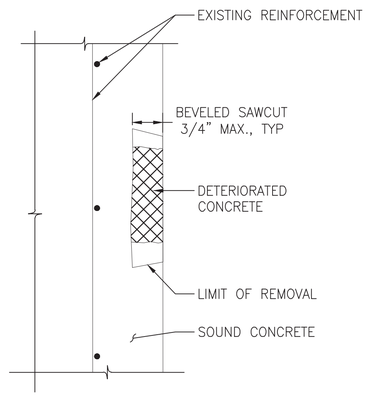

SECTION B–B

2 S211 CONCRETE REPAIR TYPE 1
SCALE: N.T.S.

NOTE:

REPAIR TYPE 1 IS USED WHEN DEPTH OF DETERIORATED CONCRETE IS LESS THAN EQUAL TO 3/4".

REINFORCED CONCRETE REPAIR TYPE 1 NOTES:

1. SQUARE OFF DETERIORATED CONCRETE TO SOUND CONCRETE WITH A SAWCUT OF 3/4" MAXIMUM.
2. REMOVE ALL LOOSE AND DELAMINATED CONCRETE TO PROVIDE A SOUND BOND BETWEEN EXISTING CONCRETE AND PATCHING.
3. APPLY A RAPID HARDENING CONCRETE PATCHING MATERIAL FROM AN APPROVED MANUFACTURER AND IN ACCORDANCE WITH THE MANUFACTURER'S INSTRUCTIONS.

LEGEND

REMOVE DETERIORATED CONCRETE

NOTES:
1. FOR GENERAL STRUCTURAL NOTES SEE DRAWING S200.

WORK ON THIS DRAWING:
- CONCRETE REPAIRS.

50% SUBMISSION
NOT FOR CONSTRUCTION

SOUTHEASTERN PENNSYLVANIA TRANSPORTATION AUTHORITY
EM&C DIVISION
1234 MARKET ST, 13TH FL, PHILADELPHIA, PA 19107

CHIEF ENGINEER - EM&C
CHIEF ENGINEERING OFFICER - B&B
CHIEF RAIL TRANSIT OFFICER
SYSTEM SAFETY
DIRECTOR OF ENGINEERING - B&B
MANAGER - ARCH / ENGINEERING
PROJECT MANAGER

HDR Engineering, Inc.
Philadelphia, PA
MELIORA DESIGN
Civil, Water Resources, and Structural Engineering
259 MORGAN STREET
PHOENIXVILLE, PA 19460
(610) 933-0123

REV	DATE	DESCRIPTION	BY	CKD	APD

DATE PRINTED: 10/19/2025

PARK
SUBWAY/ELEVATED TRAINS
TRACTION POWER SUBSTATION REHABILITATION
STRUCTURAL
CONCRETE REPAIR DETAILS - SHEET 1

SCALE: AS NOTED | SCALE FACTOR: -
DATE: 08/22/2025 | DRAWN BY: SEB | CHECKED BY: JWA
WORK ORDER NO.: 276482
SHEET NUMBER: **S211**
DWG. NO.: 12 OF 23
SHT. NO.: 168 OF 452
ARCHIVE NO.:
COMPUTER FILE NO.: 17AN-S211 | REV. NO.: -

STATUS: 50% SUBMISSION

C:\PW\WORKING\PITTD\7319817AN-S211.DWG

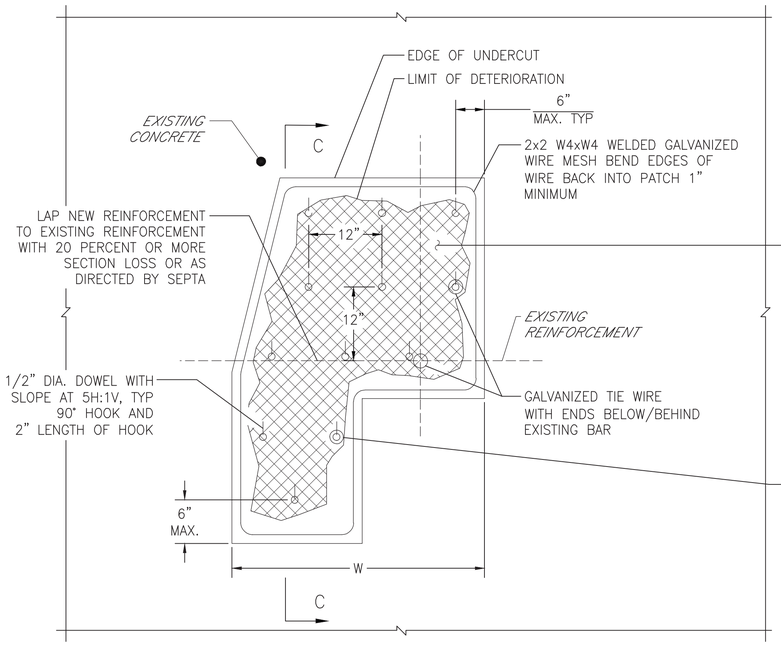

ELEVATION VIEW

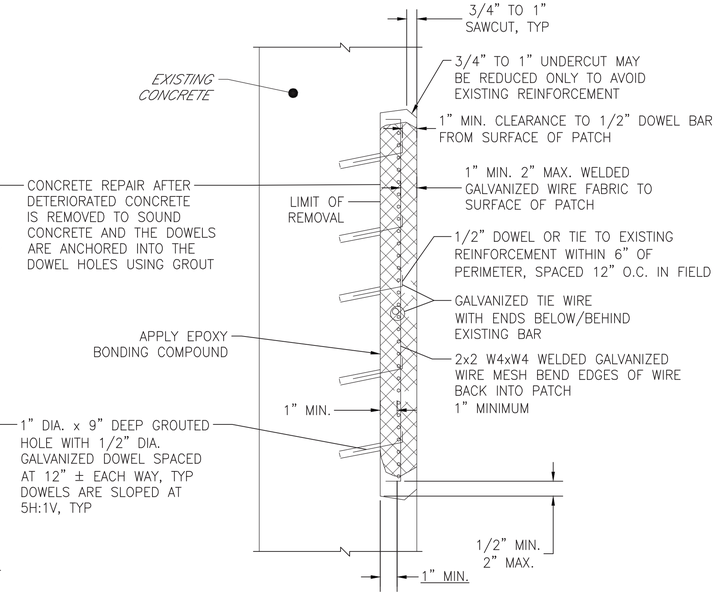

SECTION C–C

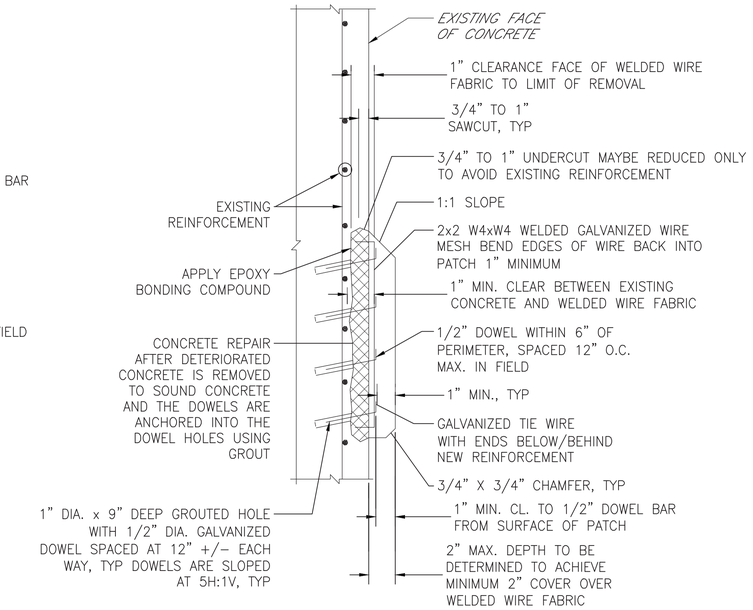

SECTION C–C
BLISTER DETAIL

NOTE:

SHALLOW REMOVAL CONDITION IF PATCH CANNOT ENGAGE EXISTING REINFORCEMENT.

1/S212 CONCRETE REPAIR TYPE 2A
SCALE: N.T.S.

REINFORCED CONCRETE REPAIR TYPE 2A NOTES:

1. REPAIR TYPE 2A IS USED WHEN DEPTH OF DETERIORATION IS GREATER THAN 3/4" AND EXISTING REINFORCEMENT IS SPACED GREATER THAN 12" ON CENTER.
2. PROVIDE GALVANIZED WIRE TIE TO CONNECT EXISTING REINFORCEMENT AND GALVANIZED 2x2 W4xW4 WELDED WIRE MESH ALONG THE PERIMETER OF THE REMOVAL AREA AT A MAXIMUM SPACING OF 6" FROM THE EDGE OF THE REMOVAL. PROVIDE TIES AT 12" SPACING IN BOTH HORIZONTAL AND VERTICAL DIRECTIONS ALONG THE PERIMETER AND WITHIN THE AREA OF REMOVAL. IF EXISTING REINFORCEMENT IS SPACED AT GREATER THAN 12" SPACING OR NOT LOCATED TO PROVIDE TIE LOCATIONS AS LISTED ABOVE, PROVIDE 1/2" GROUTED DOWELS AS SHOWN ON THE DRAWING TO PROVIDE THE LOCATIONS AT THE SAME SPACINGS.
3. USE ONLY AN APPROVED POLYMER MODIFIED AND SPECIAL CEMENTS, MORTARS AND CONCRETES AS LISTED IN THE SPECIFICATIONS.
4. SQUARE OF DETERIORATED CONCRETE TO SOUND CONCRETE WITH A SAWCUT OF 3/4" MINIMUM TO 1" MAXIMUM BUT NOT TO THE DEPTH OF THE REINFORCEMENT STEEL BACK BEVEL EDGE BEYOND SAWCUT.
5. USE HAND TOOLS TO REMOVE ALL LOOSE AND DELAMINATED CONCRETE TO PROVIDE A SOUND BOND BETWEEN EXISTING CONCRETE AND NEW CONCRETE. PNEUMATIC HAMMER WITH IMPACT RATINGS OF 3 FT–LBS OR LESS MAY BE USED IF REQUIRED.
6. IF DETERIORATED CONCRETE EXTENDS BEYOND THE PRIMARY REINFORCEMENT, REMOVE THE CONCRETE TO AT LEAST 1" BEHIND THE REINFORCEMENT.
7. APPLY AN EPOXY BONDING COMPOUND BETWEEN THE EXISTING AND THE NEW 4000 PSI CONCRETE.
8. "W" REPRESENTS LEAST DIMENSION OF DETERIORATED CONCRETE.
9. USE DOWELS ONLY WHEN "W" DIMENSION OF DETERIORATED CONCRETE IS GREATER THAN 2'–0" AND NEW OR EXISTING REINFORCEMENT CANNOT ADEQUATELY BE DEVELOPED BY LAPPING WITH EXISTING REINFORCEMENT.
10. USE A PACHOMETER TO LOCATE EXISTING REINFORCEMENT WHEN DRILLING DOWEL HOLES TO AVOID DRILLING THRU EXISTING BARS.
11. AN APPROVED EPOXY ANCHORING SYSTEM IN 90° HOLES MAY REPLACE GROUT IN SLOPED HOLES. USE A 6" MINIMUM EMBEDMENT AND IN ACCORDANCE WITH THE MANUFACTURER'S INSTRUCTIONS.
12. A #4 DEFORMED GALVANIZED REINFORCEMENT BENT "L" BAR MAY REPLACE THE 1/2" DIAMETER DOWEL HOOK.
13. ALTERNATIVE WIRE MESH MAY BE SUBSTITUTED FOR 2x2–W4xW4, PROVIDED WIRE SPACING DOES NOT EXCEED 4", AND AN EQUIVALENT STEEL AREA IS PROVIDED. NEW REINFORCEMENT BARS MAY BE OMITTED IF WIRE MESH STEEL EXCEEDS EXISTING REINFORCEMENT.
14. CLEAN EXISTING REINFORCEMENT BY MECHANICAL MEANS AND APPLY EPOXY COATING.
15. LAP EQUIVALENT NEW REINFORCEMENT TO THE EXISTING REINFORCEMENT AS DIRECTED.
16. EXISTING AND NEW REINFORCEMENT BARS AND WELDED WIRE MESH TO BE GALVANIZED.

LEGEND

– REMOVE DETERIORATED CONCRETE.

NOTES:
1. FOR GENERAL STRUCTURAL NOTES SEE DRAWING S200.

WORK ON THIS DRAWING:
- CONCRETE REPAIRS.

50% SUBMISSION
NOT FOR CONSTRUCTION

SOUTHEASTERN PENNSYLVANIA TRANSPORTATION AUTHORITY
EM&C DIVISION
1234 MARKET ST, 13TH FL, PHILADELPHIA, PA 19107

CHIEF ENGINEER - EM&C
CHIEF ENGINEERING OFFICER - B&B
CHIEF RAIL TRANSIT OFFICER
SYSTEM SAFETY
DIRECTOR OF ENGINEERING - B&B
MANAGER - ARCH / ENGINEERING
PROJECT MANAGER

HDR Engineering, Inc.
Philadelphia, PA
MELIORA DESIGN
Civil, Water Resources, and Structural Engineering
259 MORGAN STREET
PHOENIXVILLE, PA 19460
(610) 933-0123

REV	DATE	DESCRIPTION	BY	CKD	APD

DATE PRINTED: 10/19/2025

PARK
SUBWAY/ELEVATED TRAINS
TRACTION POWER SUBSTATION REHABILITATION
STRUCTURAL
CONCRETE REPAIR DETAILS - SHEET 2

SCALE: AS NOTED	SCALE FACTOR: -
DATE: 08/22/2025	DRAWN BY: MKT / CHECKED BY: JWA
WORK ORDER NO.: 276482	
SHEET NUMBER: **S212**	
DWG. NO.: 13 OF 23	
SHT. NO.: 169 OF 452	
ARCHIVE NO.:	
COMPUTER FILE NO.: 17AN-S212	REV. NO.: -

STATUS: 50% SUBMISSION

C:\PW\WORKING\PITTD173119817AN-S212.DWG

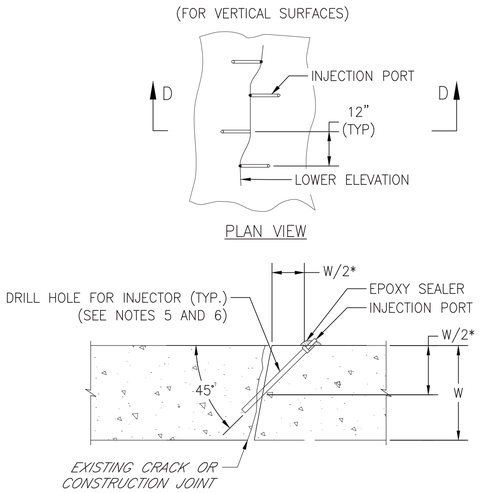

CRACK INJECTION REPAIR NOTES:

1. IN THE PRESENCE OF THE SEPTA PROJECT MANAGER, INSPECT AND DOCUMENT CONCRETE SURFACES FOR EXTENT, TYPE AND LOCATION OF CONCRETE CRACK REPAIRS.
2. THIS DETAIL APPLIES AT ALL VISIBLE ACTIVE (I.E. SHOWING EVIDENCE OF SEEPAGE OR LEAKAGE) AND INACTIVE CRACKS IN OVERHEAD SLABS AND VERTICAL WALL SURFACES AND AT ALL ACTIVE CONSTRUCTION JOINTS.
3. DIMENSIONS SHOWN WITH AN ASTERISK (*) SHALL BE ADJUSTED AS REQUIRED TO PREVENT DAMAGE TO EXISTING REINFORCING BARS.
4. DRILL HOLE SIZE SHALL BE IN ACCORDANCE WITH THE MANUFACTURER'S RECOMMENDATIONS.
5. INSTALL INJECTION PORTS, SEAL AND PRESSURE INJECT EPOXY RESIN OR HYDROPHILIC POLYURETHANE RESIN AT EACH HOLE LOCATION IN ACCORDANCE WITH THE MANUFACTURER'S INSTRUCTIONS.
6. REMOVE INJECTION PORTS, SEAL AND FILL HOLE WITH DRYPACK MORTAR AFTER PRESSURE INJECTION WORK IS COMPLETE.
7. PRIOR TO COMMENCEMENT OF WORK, ENGAGE THE MANUFACTURER'S FACTORY–AUTHORIZED TECHNICAL REPRESENTATIVE FOR CONSULTATION ON–SITE PROJECT INSPECTION, AND TECHNICAL TRAINING ON THE FIRST DAY OF THE WORK AND AT THE REQUEST OF THE SEPTA PROJECT MANAGER.
8. REFER TO SPECIFICATION SECTION 03930 "CONCRETE REPAIR" FOR FURTHER INFORMATION.

1 S213 TYPE 3 CRACK INJECTION REPAIR DETAIL
SCALE: N.T.S.

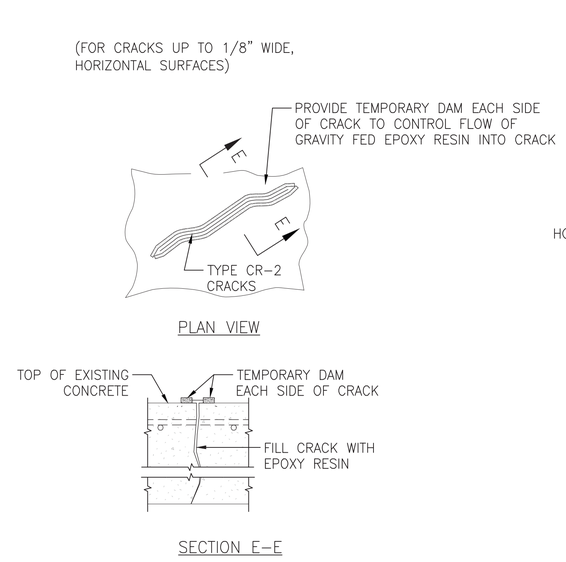

2 S213 TYPE 4 GRAVITY CRACK REPAIR DETAIL
SCALE: N.T.S.

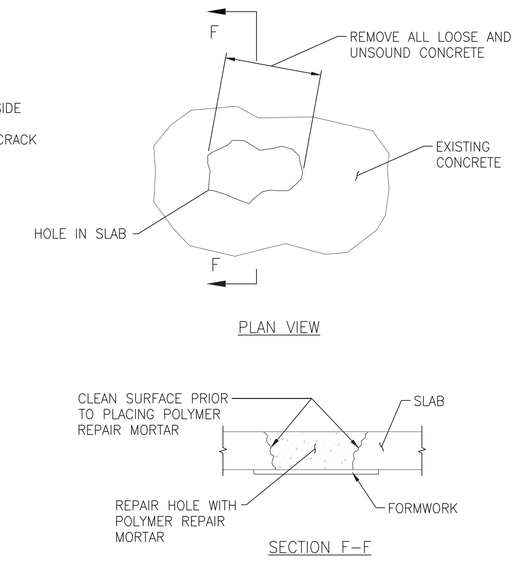

NOTE:

IF THE HOLE EXCEEDS 12" IN ANY DIRECTION DOWEL #5 BARS INTO EXISTING SLAB IN THAT DIRECTION

3 S213 TYPE 5 CONCRETE HOLE REPAIR DETAIL
SCALE: N.T.S.

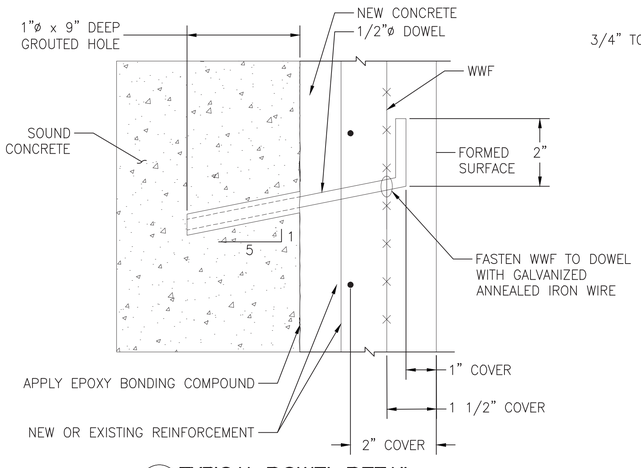

4 S213 TYPICAL DOWEL DETAIL
SCALE: N.T.S

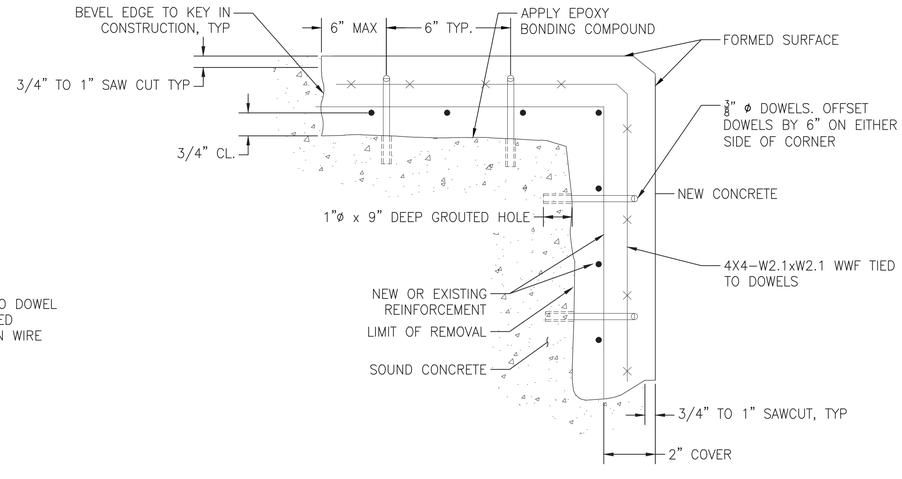

5 S213 TYPICAL CORNER REPAIR DETAIL
SCALE: N.T.S.

NOTES:
1. FOR GENERAL STRUCTURAL NOTES SEE DRAWING S200.

WORK ON THIS DRAWING:
- CONCRETE REPAIRS.

50% SUBMISSION
NOT FOR CONSTRUCTION

SOUTHEASTERN PENNSYLVANIA TRANSPORTATION AUTHORITY
EM&C DIVISION
1234 MARKET ST, 13TH FL,
PHILADELPHIA, PA 19107

CHIEF ENGINEER - EM&C
CHIEF ENGINEERING OFFICER - B&B
CHIEF RAIL TRANSIT OFFICER
SYSTEM SAFETY
DIRECTOR OF ENGINEERING - B&B
MANAGER - ARCH / ENGINEERING
PROJECT MANAGER

HDR Engineering, Inc.
Philadelphia, PA
MELIORA DESIGN
Civil, Water Resources, and Structural Engineering
259 MORGAN STREET
PHOENIXVILLE, PA 19460
(610) 933-0123

REV	DATE	DESCRIPTION	BY	CKD	APD

DATE PRINTED: 10/19/2025

PARK
SUBWAY/ELEVATED TRAINS
TRACTION POWER SUBSTATION REHABILITATION
STRUCTURAL
CONCRETE REPAIR DETAILS - SHEET 3

SCALE: AS NOTED	SCALE FACTOR: -
DATE: 08/22/2025	DRAWN BY: MKT
	CHECKED BY: JWA
WORK ORDER NO.: 276482	
SHEET NUMBER: **S213**	
DWG. NO.: 14 OF 23	
SHT. NO.: 170 OF 452	
ARCHIVE NO.:	
COMPUTER FILE NO.: 17AN-S213	REV. NO.: -

STATUS: 50% SUBMISSION

C:\PW\WORKING\PITTID\17311980\17AN-S213.DWG

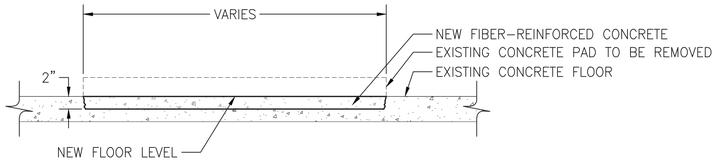

REMOVE EXISTING CONCRETE PAD TO A POINT 2" BELOW ADJACENT FLOOR. CLEAN AND PREPARE CONCRETE. POUR NEW FIBER REINFORCED CONCRETE TO LEVEL FLOOR.

1 S214 **INTERIOR CONCRETE PAD REMOVAL**
SCALE: N.T.S.

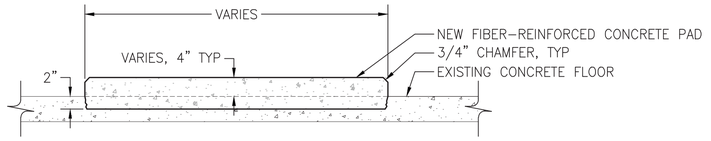

REMOVE EXISTING CONCRETE SLAB TO A POINT 2" BELOW ADJACENT FLOOR. CLEAN AND PREPARE CONCRETE. SET FORM. POUR NEW FIBER REINFORCED CONCRETE TO NEW PAD LEVEL.

2 S214 **NEW INTERIOR CONCRETE PAD**
SCALE: N.T.S.

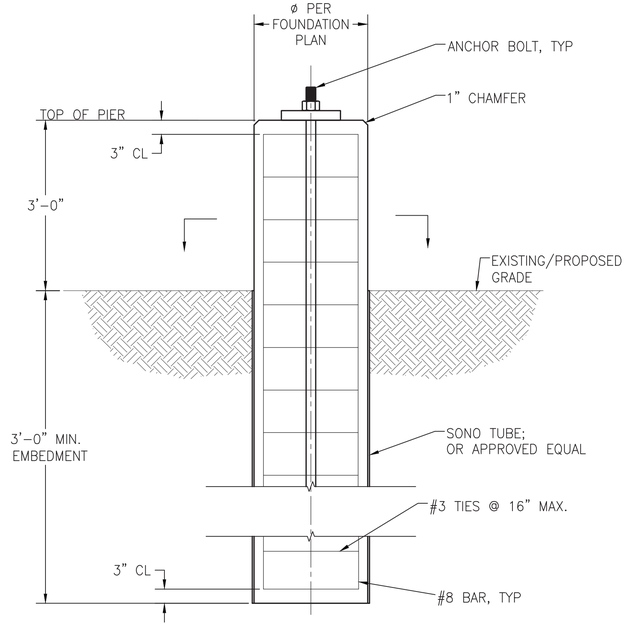

FOUNDATION DETAIL

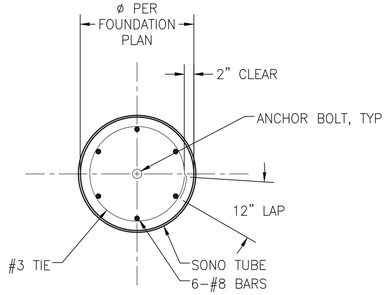

SECTION

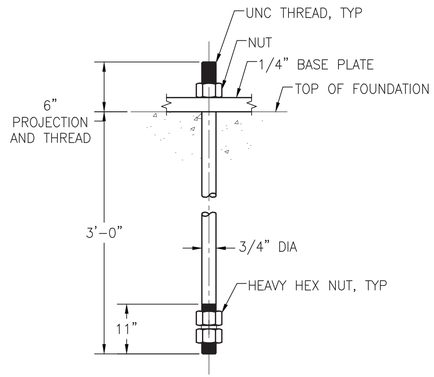

ANCHOR BOLT DETAIL (N.T.S.)

3 S214 **FOUNDATION TYPE 316 MOD-S**
SCALE: 3/4" = 1'–0"

NOTES:
1. FOR GENERAL STRUCTURAL NOTES SEE DRAWING S200.

WORK ON THIS DRAWING:
- REMOVAL OF EXISTING CONCRETE EQUIPMENT PADS.
- NEW CONCRETE EQUIPMENT PADS IN EXISTING SLAB.
- NEW FOUNDATION FOR EXTERIOR STAIRS.

12 8 4 0 12

SCALE: 3/4"=1'–0"

50% SUBMISSION
NOT FOR CONSTRUCTION

SOUTHEASTERN PENNSYLVANIA TRANSPORTATION AUTHORITY
EM&C DIVISION
1234 MARKET ST, 13TH FL,
PHILADELPHIA, PA 19107

CHIEF ENGINEER - EM&C
CHIEF ENGINEERING OFFICER - B&B
CHIEF RAIL TRANSIT OFFICER
SYSTEM SAFETY
DIRECTOR OF ENGINEERING - B&B
MANAGER - ARCH / ENGINEERING
PROJECT MANAGER

HDR
HDR Engineering, Inc.
Philadelphia, PA
MELIORA DESIGN
Civil, Water Resources, and Structural Engineering
259 MORGAN STREET
PHOENIXVILLE, PA 19460
(610) 933-0123

REV	DATE	DESCRIPTION	BY	CKD	APD

DATE PRINTED: 10/19/2025

PARK
SUBWAY/ELEVATED TRAINS
TRACTION POWER SUBSTATION REHABILITATION
STRUCTURAL
FOUNDATION DETAILS

SCALE: AS NOTED
SCALE FACTOR: -
DATE: 08/22/2025
DRAWN BY: SEB
CHECKED BY: JWA
WORK ORDER NO.: 276482
SHEET NUMBER: **S214**
DWG. NO.: 15 OF 23
SHT. NO.: 171 OF 452
ARCHIVE NO.:
COMPUTER FILE NO.: 17AN-S214
REV. NO.: -

STATUS: 50% SUBMISSION

C:\PW\WORKING\PITTD\7319817AN-S214.DWG

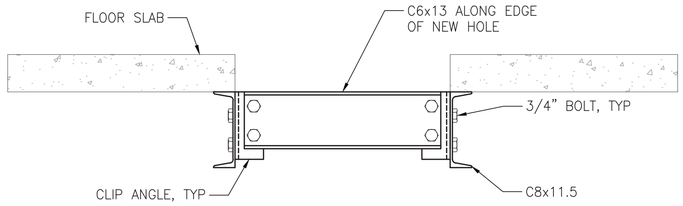

1 S215 FLOOR PENETRATION FRAMING DETAIL
SCALE: N.T.S.

NOTES:
1. FOR GENERAL STRUCTURAL NOTES SEE DRAWING S200.

WORK ON THIS DRAWING:
- NEW FLOOR PENETRATION FRAMING.

50% SUBMISSION
NOT FOR CONSTRUCTION

SOUTHEASTERN PENNSYLVANIA TRANSPORTATION AUTHORITY
EM&C DIVISION
1234 MARKET ST, 13TH FL,
PHILADELPHIA, PA 19107

CHIEF ENGINEER - EM&C

CHIEF ENGINEERING OFFICER - B&B

CHIEF RAIL TRANSIT OFFICER

SYSTEM SAFETY

DIRECTOR OF ENGINEERING - B&B

MANAGER - ARCH / ENGINEERING

PROJECT MANAGER

HDR Engineering, Inc.
Philadelphia, PA
MELIORA DESIGN
Civil, Water Resources, and Structural Engineering
259 MORGAN STREET
PHOENIXVILLE, PA 19460
(610) 933-0123

REV	DATE	DESCRIPTION	BY	CKD	APD

PARK
SUBWAY/ELEVATED TRAINS
TRACTION POWER SUBSTATION REHABILITATION
STRUCTURAL
STEEL DETAILS

SCALE: AS NOTED
SCALE FACTOR: -
DATE: 08/22/2025
DRAWN BY: SEB
CHECKED BY: JWA
WORK ORDER NO.: 276482
SHEET NUMBER: **S215**
DWG. NO.: 16 OF 23
SHT. NO.: 172 OF 452
ARCHIVE NO.:
COMPUTER FILE NO.: 17AN-S215
REV. NO.: -

DATE PRINTED: 10/19/2025
STATUS: 50% SUBMISSION
C:\PW\WORKING\PITTID\17311980\17AN-S215.DWG

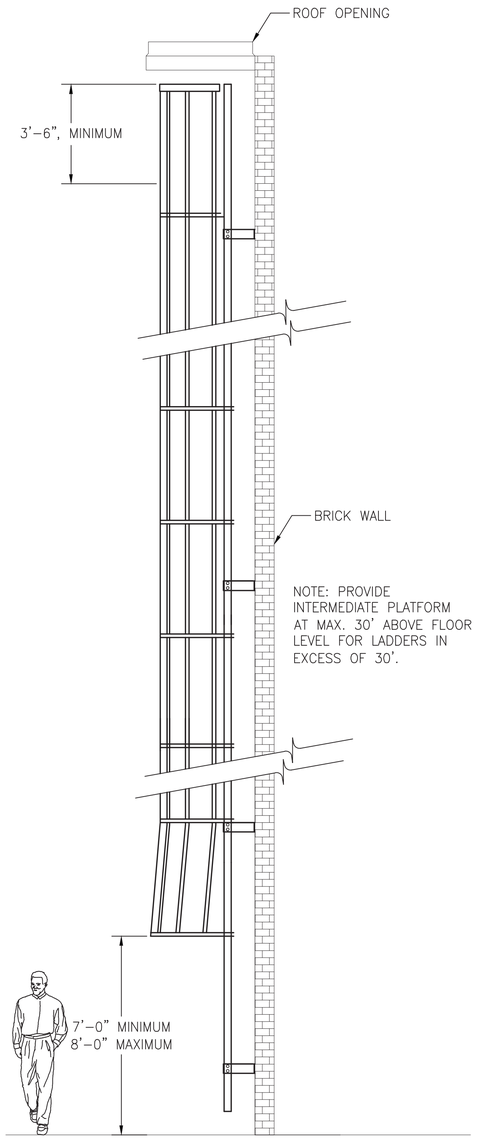

1 S216 LADDER - SIDE ELEVATION
SCALE: 3/8" = 1'-0"

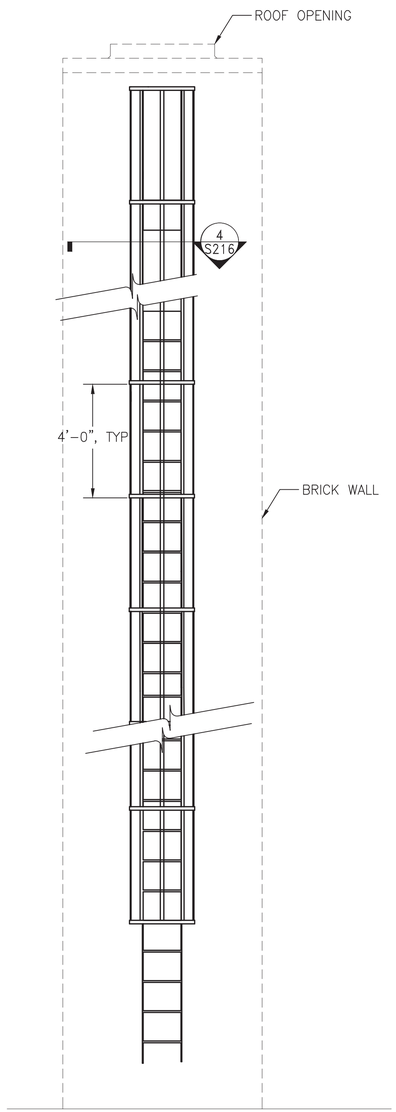

2 S216 LADDER - FRONT ELEVATION
SCALE: 3/8" = 1'-0"

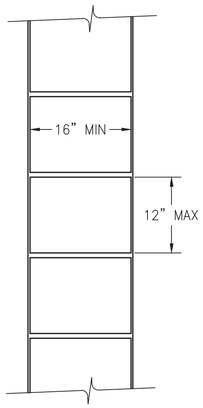

3 S216 TYPICAL LADDER DETAIL
SCALE: 1" = 1'-0"

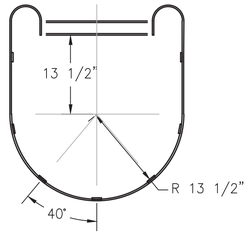

4 S216 TYPICAL CAGE SECTION
SCALE: 1" = 1'-0"

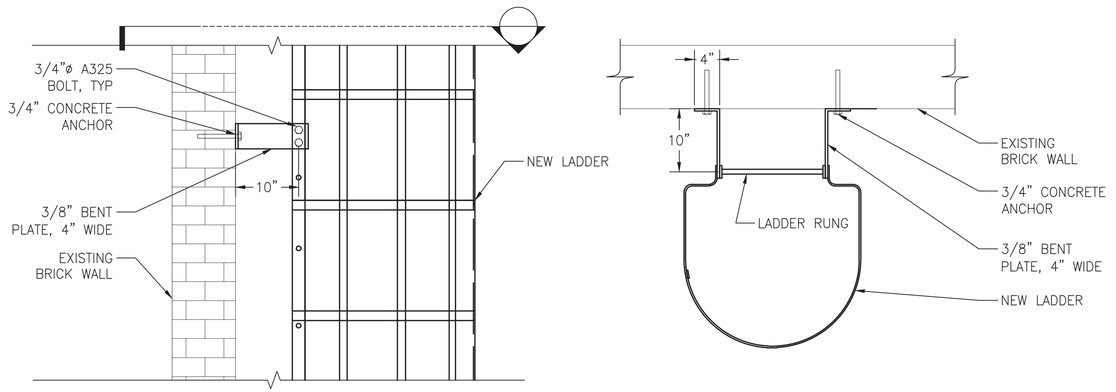

5 S216 LADDER TO WALL CONNECTION
SCALE: 1" = 1'-0"

NOTES:
1. FOR GENERAL STRUCTURAL NOTES SEE DRAWING S200.
2. EXISTING ACCESS LADDERS SHALL BE REMOVED AND REPLACED WITH OSHA COMPLIANT LADDERS PER THIS DRAWING.

WORK ON THIS DRAWING:
- NEW LADDER.

4 2 0 4
SCALE: 3/8"=1'-0"
1 0 1
1 INCH

50% SUBMISSION
NOT FOR CONSTRUCTION

SOUTHEASTERN PENNSYLVANIA TRANSPORTATION AUTHORITY
EM&C DIVISION
1234 MARKET ST, 13TH FL,
PHILADELPHIA, PA 19107

CHIEF ENGINEER - EM&C
CHIEF ENGINEERING OFFICER - B&B
CHIEF RAIL TRANSIT OFFICER
SYSTEM SAFETY
DIRECTOR OF ENGINEERING - B&B
MANAGER - ARCH / ENGINEERING
PROJECT MANAGER

HDR Engineering, Inc.
Philadelphia, PA
MELIORA DESIGN
Civil, Water Resources, and Structural Engineering
259 MORGAN STREET
PHOENIXVILLE, PA 19460
(610) 933-0123

REV	DATE	DESCRIPTION	BY	CKD	APD

DATE PRINTED: 10/19/2025

PARK
SUBWAY/ELEVATED TRAINS
TRACTION POWER SUBSTATION
REHABILITATION
STRUCTURAL
FALL PROTECTION DETAILS

SCALE: AS NOTED	SCALE FACTOR: -
DATE: 08/22/2025	DRAWN BY: SEB
	CHECKED BY: JMA
WORK ORDER NO.: 276482	
SHEET NUMBER: **S216**	
DWG. NO.: 17 OF 23	
SHT. NO.: 173 OF 452	
ARCHIVE NO.:	
COMPUTER FILE NO.: 17AN-S216	REV. NO: -

STATUS: 50% SUBMISSION

C:\PWWORKING\PITTD\17319817AN-S216.DWG

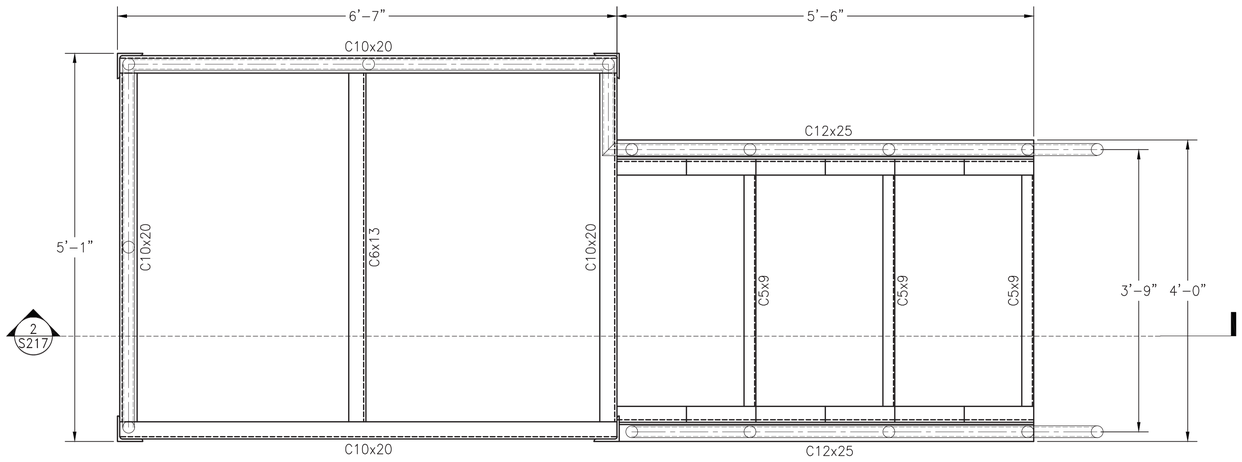

1 S217 FRONT METAL STAIRS - PLAN
SCALE: 1" = 1'-0"

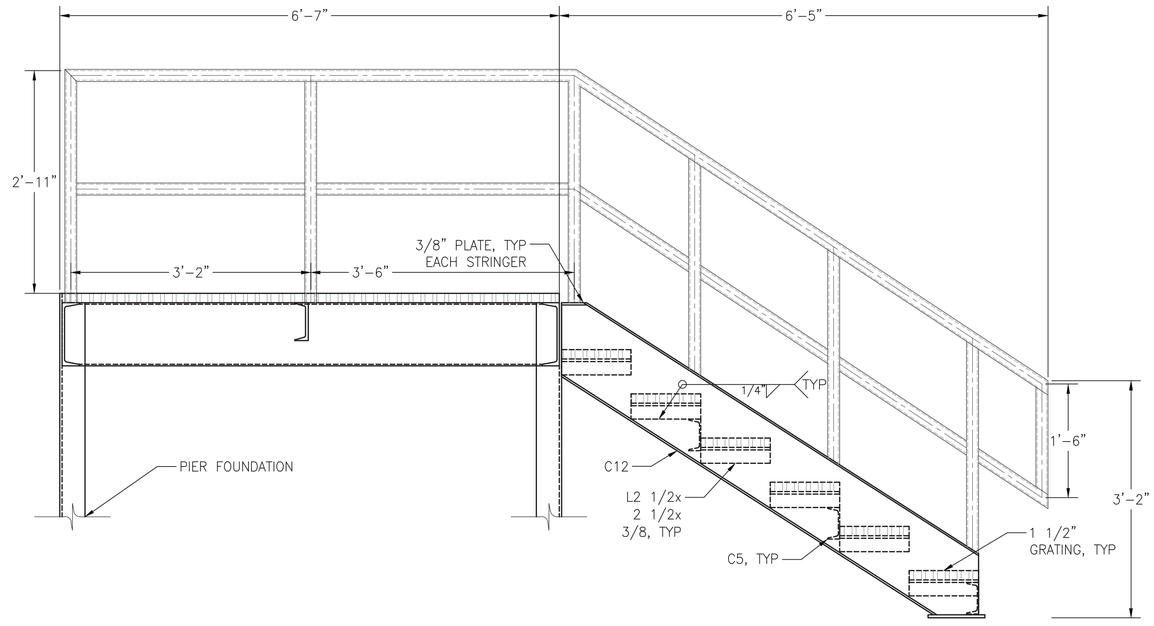

2 S217 FRONT METAL STAIRS - SECTION
SCALE: 1" = 1'-0"

NOTES:
1. FOR GENERAL STRUCTURAL NOTES SEE DRAWING S200.

WORK ON THIS DRAWING:
- NEW METAL STAIRS.

1 0 1
1 INCH

50% SUBMISSION
NOT FOR CONSTRUCTION

SOUTHEASTERN PENNSYLVANIA TRANSPORTATION AUTHORITY
EM&C DIVISION
1234 MARKET ST, 13TH FL,
PHILADELPHIA, PA 19107

CHIEF ENGINEER - EM&C
CHIEF ENGINEERING OFFICER - B&B
CHIEF RAIL TRANSIT OFFICER
SYSTEM SAFETY
DIRECTOR OF ENGINEERING - B&B
MANAGER - ARCH / ENGINEERING
PROJECT MANAGER

HDR Engineering, Inc.
Philadelphia, PA
MELIORA DESIGN
Civil, Water Resources, and Structural Engineering
259 MORGAN STREET
PHOENIXVILLE, PA 19460
(610) 933-0123

REV	DATE	DESCRIPTION	BY	CK'D	APP'D

DATE PRINTED: 10/19/2025

PARK
SUBWAY/ELEVATED TRAINS
TRACTION POWER SUBSTATION
REHABILITATION
STRUCTURAL
BUILDING DETAILS - SHEET 1

SCALE: AS NOTED
SCALE FACTOR: -
DATE: 08/22/2025
DRAWN BY: SEB
CHECKED BY: JWA
WORK ORDER NO.: 276482
SHEET NUMBER: **S217**
DWG. NO.: 18 OF 23
SHT. NO.: 174 OF 452
ARCHIVE NO.:
COMPUTER FILE NO.: 17AN-S217
REV. NO.: -

STATUS: 50% SUBMISSION

C:\PWWORKING\PITT\D1731198\17AN-S217.DWG

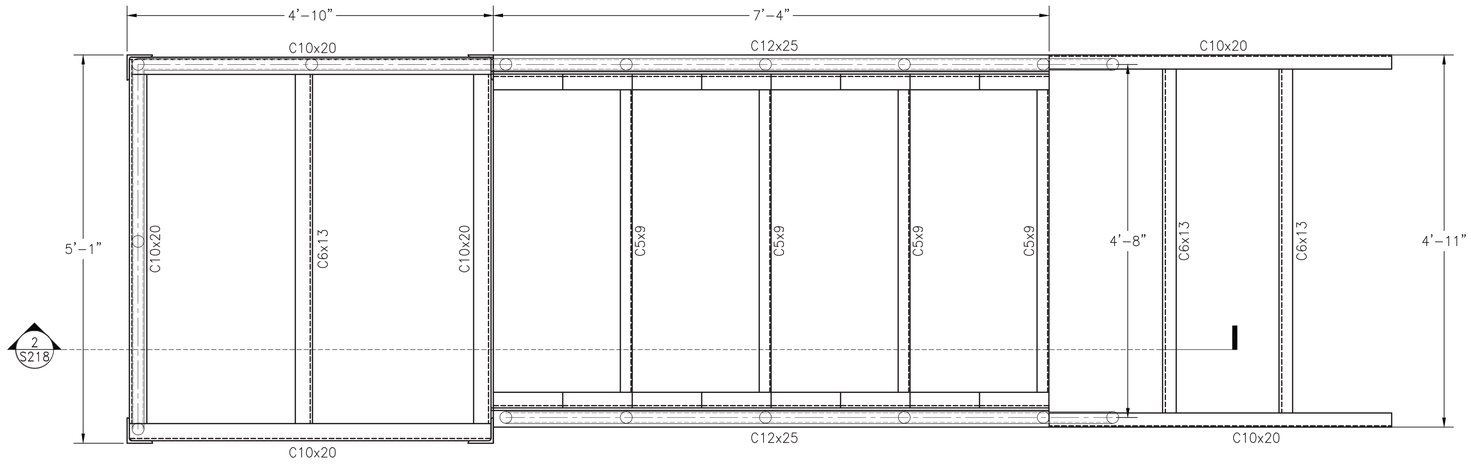

1 S218 REAR METAL STAIRS - PLAN
SCALE: 1" = 1'-0"

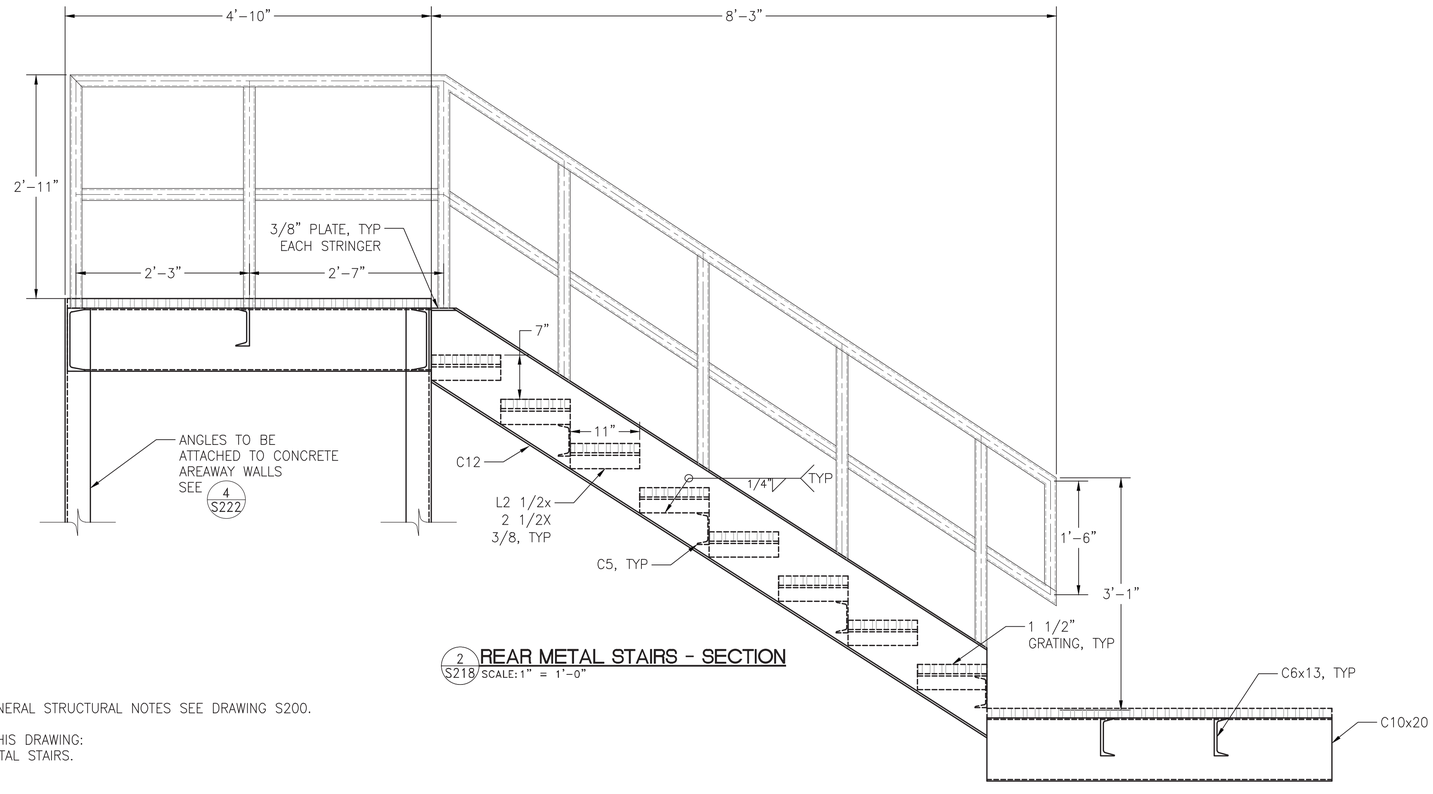

2 S218 REAR METAL STAIRS - SECTION
SCALE: 1" = 1'-0"

NOTES:
1. FOR GENERAL STRUCTURAL NOTES SEE DRAWING S200.

WORK ON THIS DRAWING:
- NEW METAL STAIRS.

1 0 1
1 INCH

50% SUBMISSION
NOT FOR CONSTRUCTION

C:\PW\WORKING\PITTD\7311980\17AN-S218.DWG

SOUTHEASTERN PENNSYLVANIA TRANSPORTATION AUTHORITY
EM&C DIVISION
1234 MARKET ST, 13TH FL,
PHILADELPHIA, PA 19107

CHIEF ENGINEER - EM&C
CHIEF ENGINEERING OFFICER - B&B
CHIEF RAIL TRANSIT OFFICER
SYSTEM SAFETY
DIRECTOR OF ENGINEERING - B&B
MANAGER - ARCH / ENGINEERING
PROJECT MANAGER

HDR Engineering, Inc.
Philadelphia, PA
MELIORA DESIGN
Civil, Water Resources, and Structural Engineering
259 MORGAN STREET
PHOENIXVILLE, PA 19460
(610) 933-0123

REV	DATE	DESCRIPTION	BY	CKD	APD

DATE PRINTED: 10/19/2025

PARK
SUBWAY/ELEVATED TRAINS
TRACTION POWER SUBSTATION REHABILITATION
STRUCTURAL
BUILDING DETAILS - SHEET 2

SCALE: AS NOTED
SCALE FACTOR: -
DATE: 08/22/2025
DRAWN BY: SEB
CHECKED BY: JWA
WORK ORDER NO.: 276482
SHEET NUMBER: **S218**
DWG. NO.: 19 OF 23
SHT. NO.: 175 OF 452
ARCHIVE NO.:
COMPUTER FILE NO.: 17AN-S218
REV. NO.: -

STATUS: 50% SUBMISSION

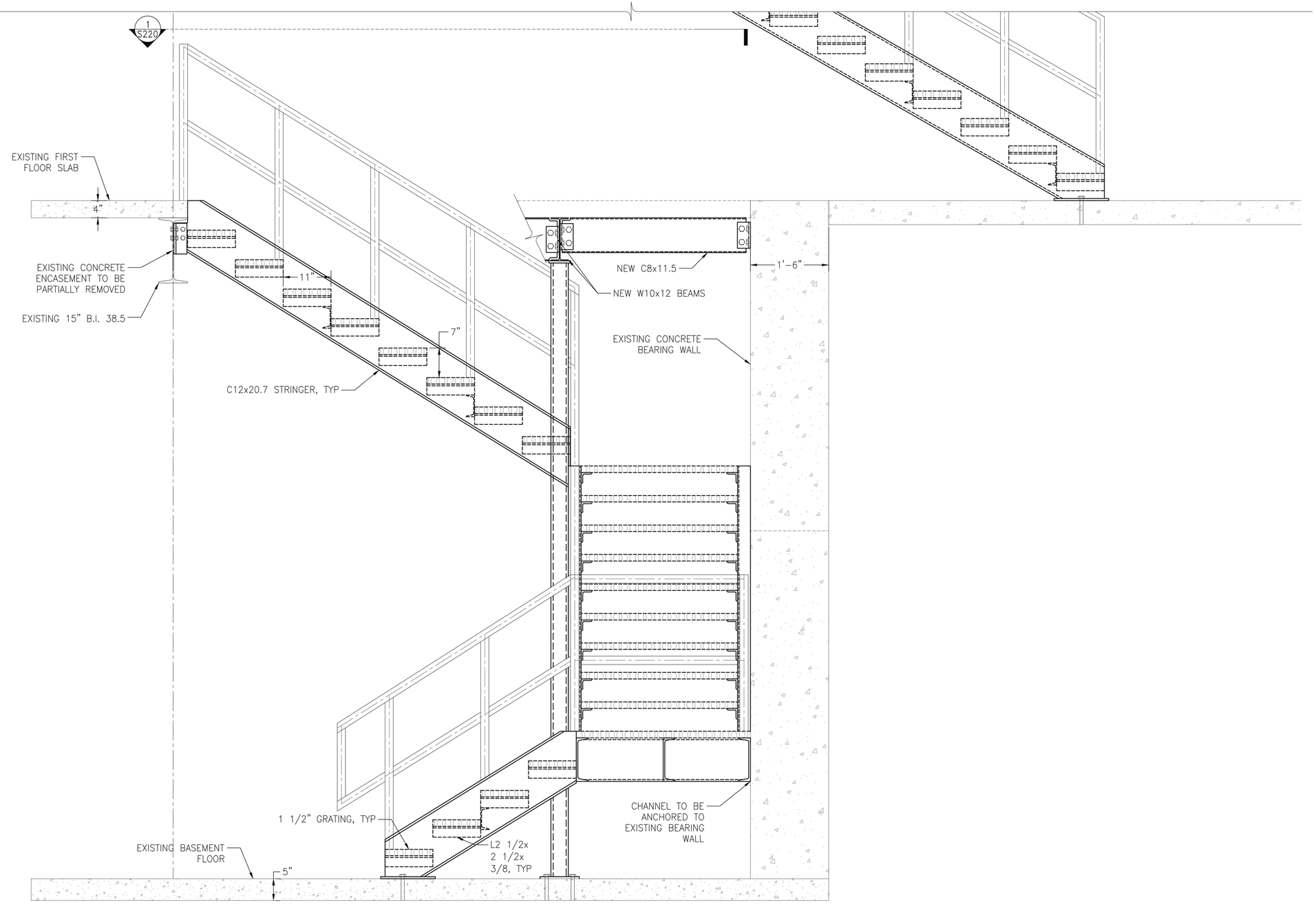

1 S219 **INTERIOR STAIRS**
SCALE: 1" = 1'-0"

NOTES:
1. FOR GENERAL STRUCTURAL NOTES SEE DRAWING S200.

WORK ON THIS DRAWING:
- NEW METAL STAIRS.

1 0 1
1 INCH

50% SUBMISSION
NOT FOR CONSTRUCTION

SOUTHEASTERN PENNSYLVANIA TRANSPORTATION AUTHORITY
EM&C DIVISION
1234 MARKET ST, 13TH FL,
PHILADELPHIA, PA 19107

CHIEF ENGINEER - EM&C
CHIEF ENGINEERING OFFICER - B&B
CHIEF RAIL TRANSIT OFFICER
SYSTEM SAFETY
DIRECTOR OF ENGINEERING - B&B
MANAGER - ARCH / ENGINEERING
PROJECT MANAGER

HDR Engineering, Inc.
Philadelphia, PA
MELIORA DESIGN
Civil, Water Resources, and Structural Engineering
259 MORGAN STREET
PHOENIXVILLE, PA 19460
(610) 933-0123

REV	DATE	DESCRIPTION	BY	CKD	APD

DATE PRINTED: 10/19/2025

PARK
SUBWAY/ELEVATED TRAINS
TRACTION POWER SUBSTATION REHABILITATION
STRUCTURAL
BUILDING DETAILS - SHEET 3

SCALE: AS NOTED
SCALE FACTOR: -
DATE: 08/22/2025
DRAWN BY: SEB
CHECKED BY: JWA
WORK ORDER NO.: 276482
SHEET NUMBER: **S219**
DWG. NO.: 20 OF 23
SHT. NO.: 176 OF 452
ARCHIVE NO.:
COMPUTER FILE NO.: 17AN-S219
REV. NO.: -

STATUS: 50% SUBMISSION

C:\PW\WORKING\PITTD\7311998\17AN-S219.DWG

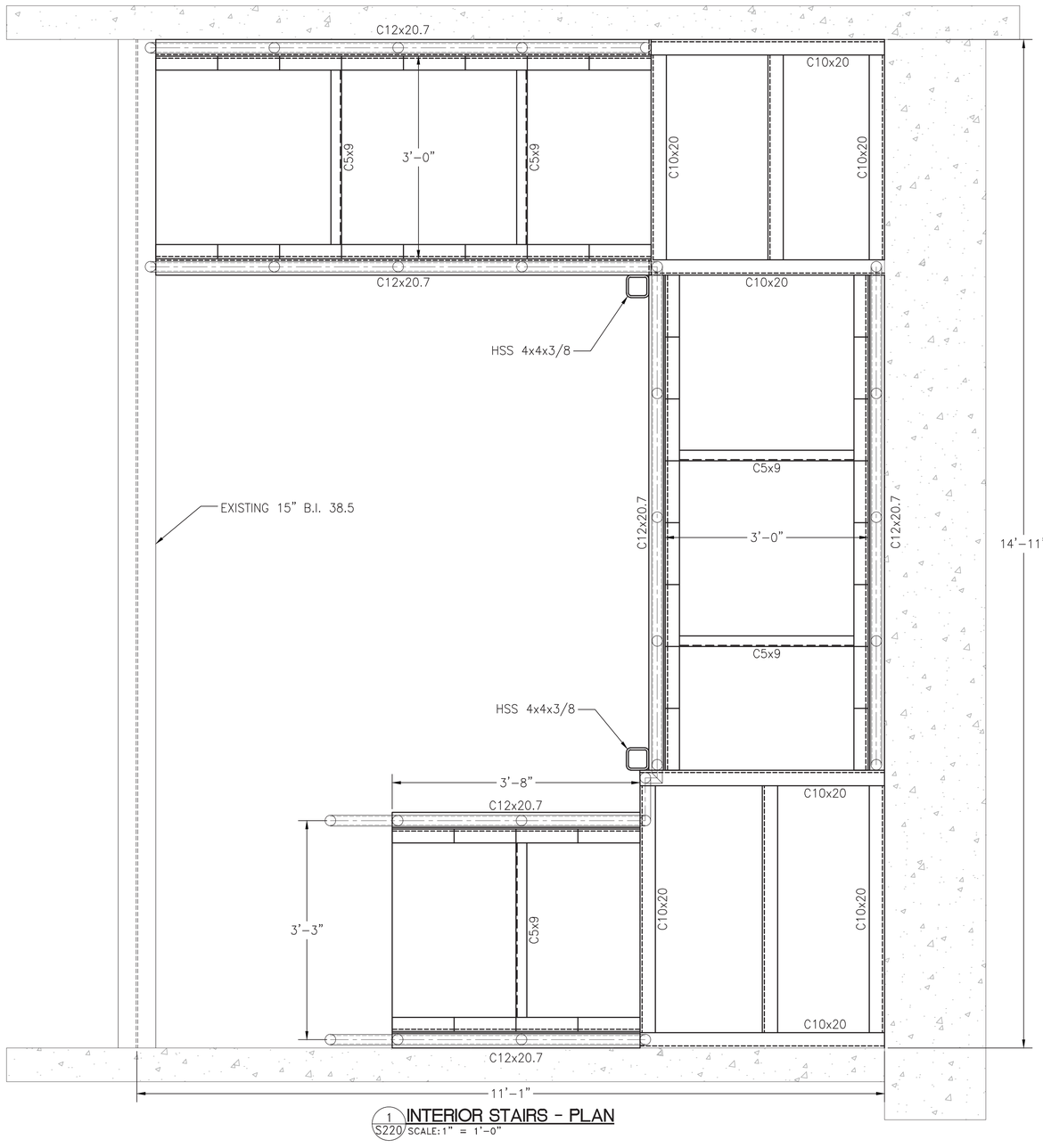

1 S220 INTERIOR STAIRS - PLAN
SCALE: 1" = 1'-0"

NOTES:
1. FOR GENERAL STRUCTURAL NOTES SEE DRAWING S200.

WORK ON THIS DRAWING:
- NEW METAL STAIRS.

1 0 1
1 INCH

50% SUBMISSION
NOT FOR CONSTRUCTION

C:\PW\WORKING\PITTID\17311980\17AN-S220.DWG

SOUTHEASTERN PENNSYLVANIA TRANSPORTATION AUTHORITY
EM&C DIVISION
1234 MARKET ST, 13TH FL,
PHILADELPHIA, PA 19107

CHIEF ENGINEER - EM&C
CHIEF ENGINEERING OFFICER - B&B
CHIEF RAIL TRANSIT OFFICER
SYSTEM SAFETY
DIRECTOR OF ENGINEERING - B&B
MANAGER - ARCH / ENGINEERING
PROJECT MANAGER

HDR Engineering, Inc.
Philadelphia, PA
MELIORA DESIGN
Civil, Water Resources, and Structural Engineering
259 MORGAN STREET
PHOENIXVILLE, PA 19460
(610) 933-0123

REV	DATE	DESCRIPTION	BY	CKD	APD

DATE PRINTED: 10/19/2025

PARK
SUBWAY/ELEVATED TRAINS
TRACTION POWER SUBSTATION REHABILITATION
STRUCTURAL
BUILDING DETAILS - SHEET 4

SCALE: AS NOTED	SCALE FACTOR: -
DATE: 08/22/2025	DRAWN BY: SEB
	CHECKED BY: JWA
WORK ORDER NO.: 276482	
SHEET NUMBER: **S220**	
DWG. NO.: 21 OF 23	
SHT. NO.: 177 OF 452	
ARCHIVE NO.:	
COMPUTER FILE NO.: 17AN-S220	REV. NO.: -

STATUS: 50% SUBMISSION

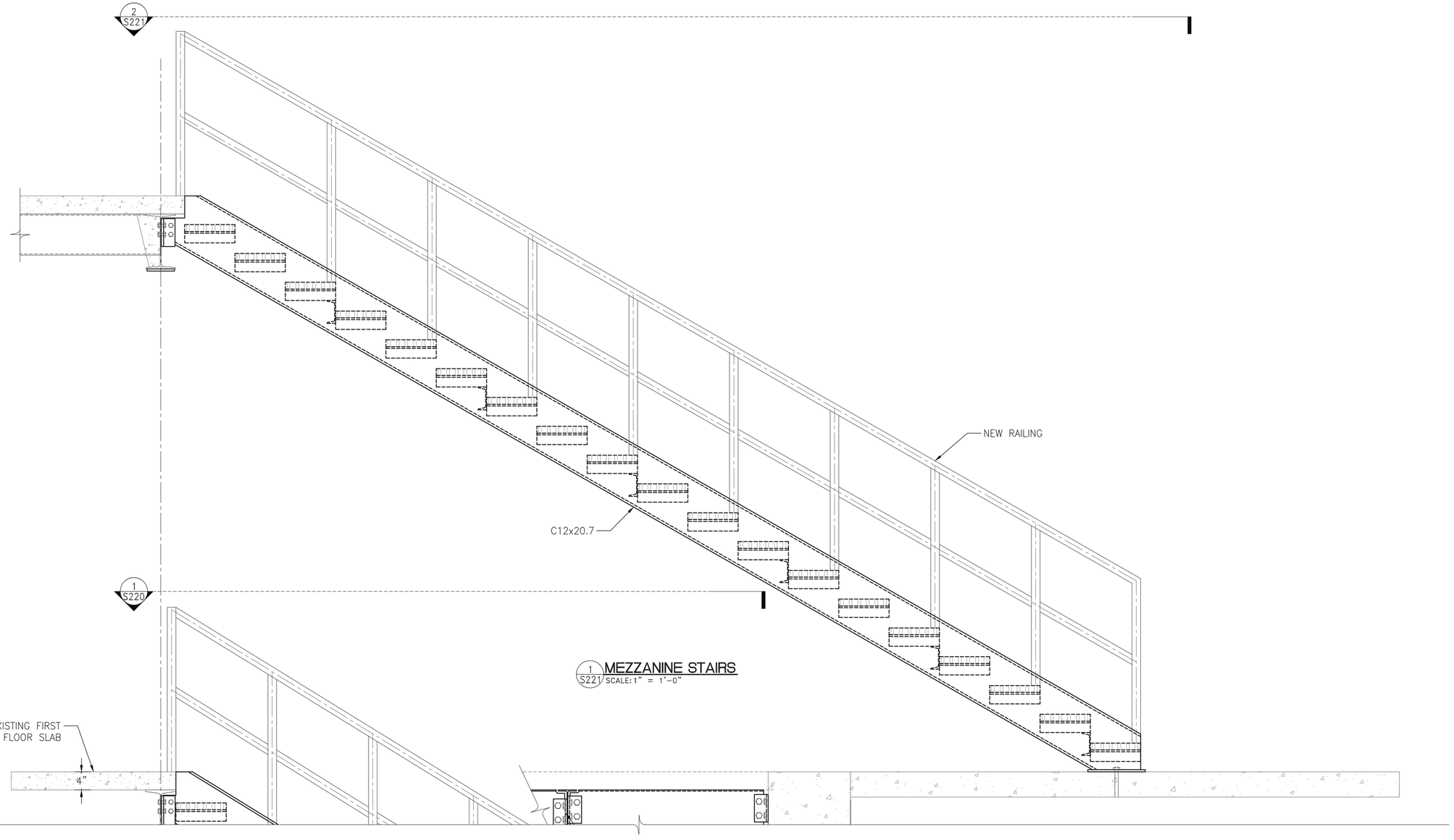

1 S221 MEZZANINE STAIRS
SCALE: 1" = 1'-0"

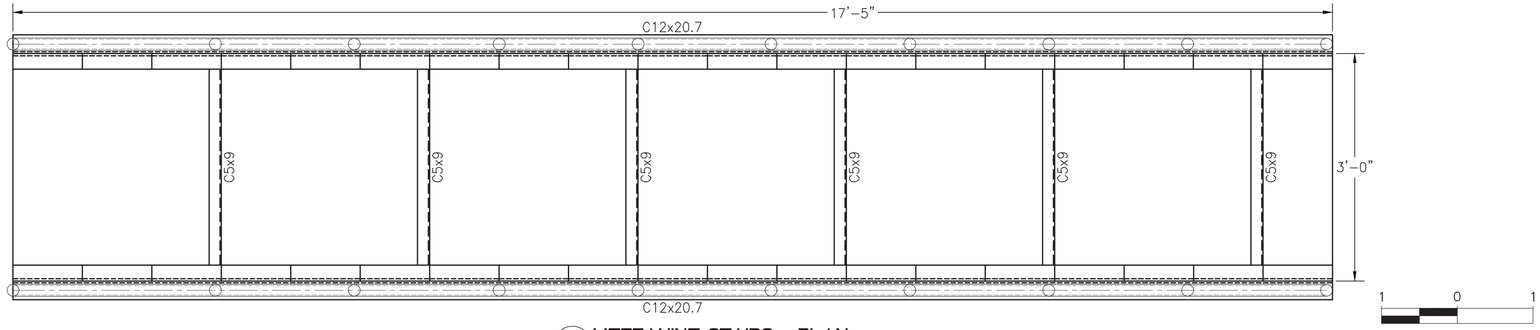

2 S221 MEZZANINE STAIRS - PLAN
SCALE: 1" = 1'-0"

NOTES:
1. FOR GENERAL STRUCTURAL NOTES SEE DRAWING S200.

WORK ON THIS DRAWING:
- NEW METAL STAIRS.

1 0 1
1 INCH

50% SUBMISSION
NOT FOR CONSTRUCTION

C:\PW\WORKING\PITTID\17311980\17AN-S221.DWG

SOUTHEASTERN PENNSYLVANIA TRANSPORTATION AUTHORITY
EM&C DIVISION
1234 MARKET ST, 13TH FL,
PHILADELPHIA, PA 19107

CHIEF ENGINEER - EM&C
CHIEF ENGINEERING OFFICER - B&B
CHIEF RAIL TRANSIT OFFICER
SYSTEM SAFETY
DIRECTOR OF ENGINEERING - B&B
MANAGER - ARCH / ENGINEERING
PROJECT MANAGER

HDR Engineering, Inc.
Philadelphia, PA
MELIORA DESIGN
Civil, Water Resources, and Structural Engineering
259 MORGAN STREET
PHOENIXVILLE, PA 19460
(610) 933-0123

REV	DATE	DESCRIPTION	BY	CKD	APD

DATE PRINTED: 10/19/2025

PARK
SUBWAY/ELEVATED TRAINS
TRACTION POWER SUBSTATION REHABILITATION
STRUCTURAL
BUILDING DETAILS - SHEET 5

SCALE: AS NOTED
SCALE FACTOR: -
DATE: 08/22/2025
DRAWN BY: SEB
CHECKED BY: JWA
WORK ORDER NO.: 276482
SHEET NUMBER: **S221**
DWG. NO.: 22 OF 23
SHT. NO.: 178 OF 452
ARCHIVE NO.:
COMPUTER FILE NO.: 17AN-S221
REV. NO.: -

STATUS: 50% SUBMISSION

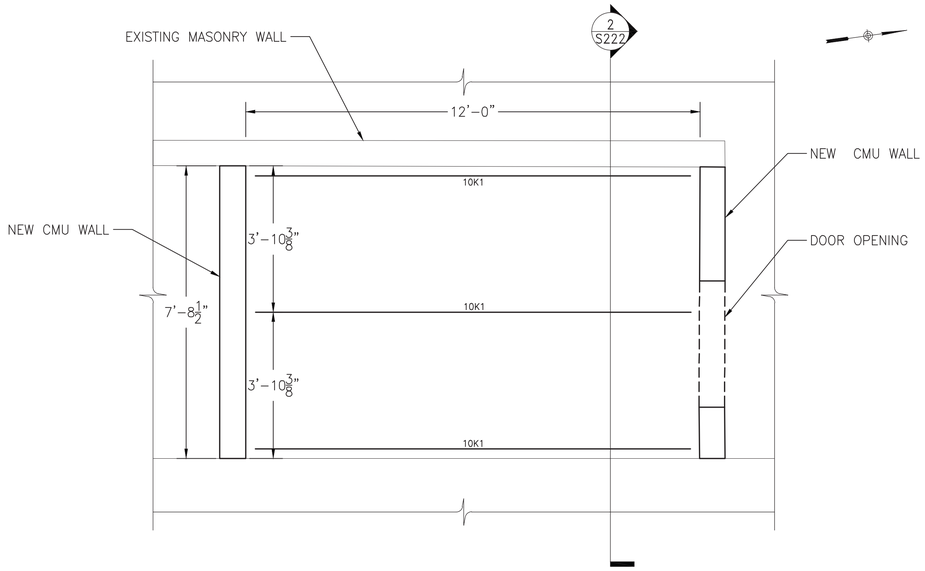

1 S222 **BATTERY ROOM FRAMING PLAN**
SCALE: 1/2" = 1'-0"

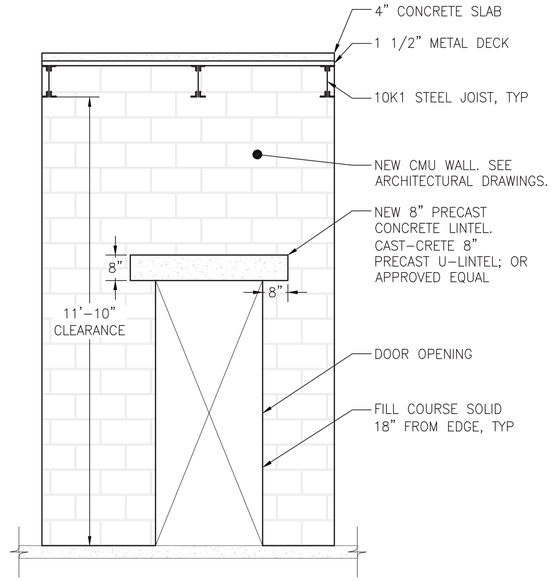

2 S222 **BATTERY ROOM - ELEVATION**
SCALE: 1/2" = 1'-0"

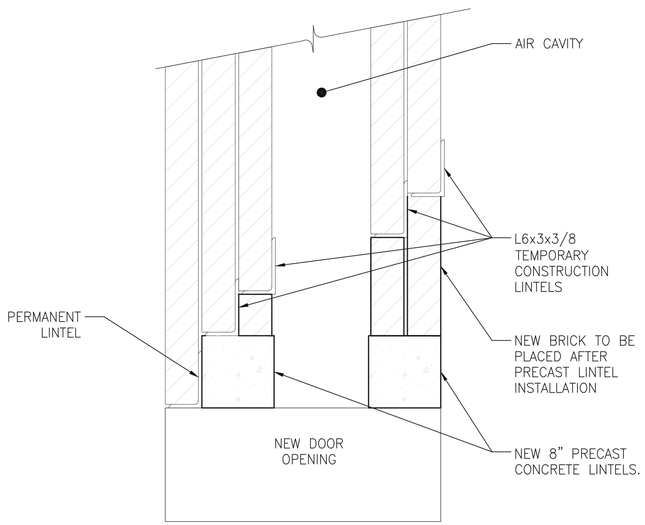

3 S222 **SECTION THROUGH LINTEL**
SCALE: N.T.S.

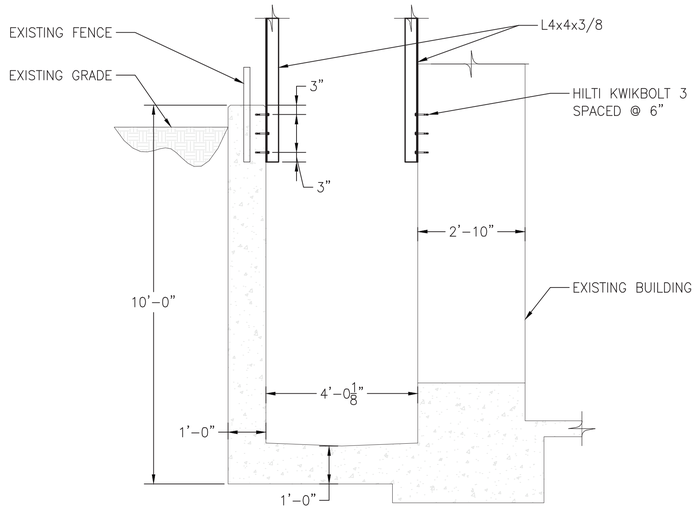

4 S222 **SOUTH AREAWAY STAIR DETAIL**
SCALE: N.T.S.

NOTES:
1. FOR GENERAL STRUCTURAL NOTES SEE DRAWING S200.

WORK ON THIS DRAWING:
- NEW BATTERY ROOM CEILING FRAMING.
- NEW PRECAST LINTEL.
- NEW STEEL LINTEL.

2 1 0 2
SCALE: 1/2"=1'-0"

50% SUBMISSION
NOT FOR CONSTRUCTION

SOUTHEASTERN PENNSYLVANIA TRANSPORTATION AUTHORITY
EM&C DIVISION
1234 MARKET ST, 13TH FL.
PHILADELPHIA, PA 19107

CHIEF ENGINEER - EM&C
CHIEF ENGINEERING OFFICER - B&B
CHIEF RAIL TRANSIT OFFICER
SYSTEM SAFETY
DIRECTOR OF ENGINEERING - B&B
MANAGER - ARCH / ENGINEERING
PROJECT MANAGER

HDR Engineering, Inc.
Philadelphia, PA
MELIORA DESIGN
Civil, Water Resources, and Structural Engineering
259 MORGAN STREET
PHOENIXVILLE, PA 19460
(610) 933-0123

REV	DATE	DESCRIPTION	BY	CKD	APD

DATE PRINTED: 10/19/2025

PARK
SUBWAY/ELEVATED TRAINS
TRACTION POWER SUBSTATION REHABILITATION
STRUCTURAL
BUILDING DETAILS - SHEET 6

SCALE: AS NOTED	SCALE FACTOR: -
DATE: 08/22/2025	DRAWN BY: SEB
	CHECKED BY: JWA
WORK ORDER NO.: 276482	
SHEET NUMBER: **S222**	
DWG. NO.: 23 OF 23	
SHT. NO.: 179 OF 452	
ARCHIVE NO.:	
COMPUTER FILE NO.: 17AN-S222	REV. NO.: -

STATUS: 50% SUBMISSION

C:\PW\WORKING\PITTD1731198\17AN-S222.DWG

LEGEND-SYMBOLS:

SYMBOL	DESCRIPTION
	POINT OF DISCONNECTION FROM EXISTING
	POINT OF CONNECTION OF NEW TO EXISTING
X / X	EQUIP TYPE / EQUIP # — EQUIPMENT TAG
- - - -	DEMO
———	NEW WORK
———	EXISTING TO REMAIN (E)
	NEW SANITARY PIPING
T	THERMOSTAT
	SUPPLY AIR DIFFUSER
	RETURN AIR REGISTER
M	MOTORIZED DAMPER
	AIRFLOW DIRECTION
	BACKDRAFT DAMPER
	FLOOR DRAIN/ROOF DRAIN
H	HYDROGEN DETECTOR

ABBREVIATIONS:

@	AT
A	AMPERES
AC	AIR CONDITIONER
AD	ACCESS DOOR
ADA	AMERICANS WITH DISABILITIES ACT
AFF	ABOVE FINISHED FLOOR
AHU	AIR HANDLING UNIT
BOP	BOTTOM OF PIPE
BTU	BRITISH THERMAL UNIT
CD	CONDENSATE DRAIN/CEILING DIFFUSER
CFM	CUBIC FEET PER MINUTE
CO	CLEANOUT
COP	COEFFICIENT OF PERFORMANCE
CU	CONDENSER UNIT
CW	COLD WATER
DB	DRY BULB
DIA, ø	DIAMETER
DN	DOWN
DW	DOMESTIC WATER
(E)	EXISTING TO REMAIN
EA	EXHAUST AIR
EAT	EXHAUST AIR TEMPERATURE
EDH	ELECTRIC DUCT HEATER
EF	EXHAUST FAN
EQUIP	EQUIPMENT
(ER)	EXISTING TO BE RELOCATED
EER	ENERGY EFFICIENCY RATIO
ERV	ENERGY RECOVERY VENTILATION UNIT
ETC.	ET CETERA
EUH	ELECTRIC UNIT HEATER
EW	EYE WASH
EX	EXHAUST, EXTERNAL
FD	FLOOR DRAIN
FLA	FULL LOAD AMPS
FP	FIRE PROTECTION
FT	FEET
GAL	GALLON
GPH	GALLONS PER HOUR
GPM	GALLONS PER MINUTE
H	HEIGHT
HP	HORSEPOWER/HEAT PUMP
HVAC	HEATING, VENTILATION AND AIR CONDITIONING
HW	HOT WATER
HZ	HERTZ (CYCLES PER SECOND)
IN	INCH
IRH	INFRARED RADIANT HEATER
KW	KILOWATT
L	LENGTH
LBS	POUNDS
LAT	LATENT AIR TEMPERATURE
LV	LOUVER
MBH	THOUSANDS OF BTUS PER HOUR
MAX	MAXIMUM
MCA	MINIMUM CIRCUIT AMPACITY
MCP	MAIN CONTROL PANEL
MD	MOTORIZED DAMPER
MFR	MANUFACTURER
MIN	MINIMUM
MOCP	MAXIMUM OVERCURRENT PROTECTION
(N)	NEW
NO., #	NUMBER
OA	OUTSIDE AIR
Ø	PHASE
PREP	PREPARE
PSI	POUNDS PER SQUARE INCH
QTY	QUANTITY
(R)	EXISTING TO BE REMOVED
RA	RETURN AIR
RD	ROOF DRAIN
(RE)	RELOCATED EXISTING
RL	RAIN LEADER
RM	ROOM
RPM	REVOLUTIONS PER MINUTE
SAN	SANITARY
SA	SUPPLY AIR
S.F., FT^2	SQUARE FEET
SD	SCUPPER DRAIN
SP	STATIC PRESSURE
SR	SUPPLY REGISTER
T	THERMOSTAT
TYP	TYPICAL
U/G	UNDER GROUND
V	VOLT, VENT
VD	VOLUME DAMPER
W	WIDTH
WB	WET BULB
WC	WATER CLOSET/WATER COLUMN
WESS	WAYSIDE ENERGY STORAGE SYSTEM

GENERAL NOTES:

1. SEE ARCHITECTURAL DRAWINGS FOR NEW AND EXISTING GENERAL CONSTRUCTION WORK.
2. COMPLY WITH THE PHILADELPHIA PLUMBING CODE AND PHILADELPHIA MECHANICAL CODE IN ADDITION TO THE APPLICABLE MUNICIPAL CODES AND STANDARDS.
3. REVIEW ALL PROJECT DOCUMENTS OF ALL TRADES FOR A THOROUGH UNDERSTANDING OF PROJECT AND ANY CROSS REFERENCING OF WORK. REVIEW ALL PROJECT REQUIREMENTS PRIOR TO BIDDING. DISCREPANCIES BETWEEN DOCUMENTS SHALL BE REPORTED TO SEPTA PROJECT MANAGER PRIOR TO BIDDING.
4. INSTALL ALL EQUIPMENT WITH ADEQUATE CLEARANCES FOR MAINTENANCE AND SERVICING AND IN ACCORDANCE WITH THE MANUFACTURER'S INSTRUCTIONS AND APPLICABLE CODES.
5. OBTAIN AND PAY FOR ALL PERMITS AND PAY FOR ALL COSTS OF MATERIALS. HANDLE, STORE AND PROTECT ALL EQUIPMENT TO PREVENT DAMAGE BEFORE AND DURING INSTALLATION IN ACCORDANCE WITH THE MANUFACTURER'S INSTRUCTIONS. PROTECT THE WORK SITE AND NEW AND EXISTING WORK AGAINST ANY DAMAGE, INCLUDING BUT NOT LIMITED TO WATER, DUST, HEAT, FREEZING ETC. UNTIL FINAL COMPLETION AND ACCEPTANCE BY SEPTA.
6. REFER TO SPECIFICATIONS FOR MATERIALS TO BE USED AND METHODS OF INSTALLATION.
7. WHERE UTILITIES AND/OR SERVICES REQUIRE SHUTDOWN FOR THE WORK TO BE PERFORMED, NOTIFY THE SEPTA PROJECT MANAGER. IN WRITING, A MINIMUM OF TWO (2) WEEKS PRIOR TO THE REQUESTED SHUTDOWN.
8. STORAGE OF MATERIALS AND/OR EQUIPMENT SHALL NOT BE ALLOWED OTHER THAN WITHIN THE LIMITS OF THE STAGING AREA OR CONFINES OF THE PROJECT WORK AREA AND AS APPROVED BY THE SEPTA PROJECT MANAGER.
9. PERFORM ALL WORK IN A NEAT AND WORKMANLIKE MANNER TO THE SATISFACTION OF SEPTA STANDARDS.
10. RESTORE ALL EXISTING WORK DISTURBED OR DAMAGED BY THE DEMOLITION AND CONSTRUCTION ACTIVITIES TO MATCH EXISTING ORIGINAL CONDITION OR BETTER.
11. REMOVE, RECYCLE AND DISPOSE OF ALL CONSTRUCTION WASTE AND DEMOLITION DEBRIS IN ACCORDANCE WITH THE APPROVED CONSTRUCTION WASTE MANAGEMENT PLAN.
12. MAINTAIN A COPY OF THE CURRENT SET OF CONTRACT DOCUMENTS WITH THE CONTRACTOR AS–BUILT INFORMATION AT THE JOB SITE AT ALL TIMES.
13. VERIFY ALL DIMENSIONS IN THE FIELD AND REPORT DISCREPANCIES, IF ANY, TO THE SEPTA PROJECT MANAGER FOR CLARIFICATION PRIOR TO STARTING ANY AFFECTED WORK.
14. PATCH AND REPAIR ALL OPENINGS LEFT IN EXISTING WALL SURFACES OR CEILINGS BY THE REMOVAL OF EXISTING SURFACE AND OR SEMI–RECESSED FITTINGS OR PIPING AND FINISH SUCH AREAS TO MATCH ADJACENT SURFACES.
15. PRIOR TO DELIVERY OF ANY MATERIALS TO THE SITE, PROVIDE SAFETY DATA SHEETS FOR ALL REQUIRED ITEMS AND MATERIALS USED IN THE WORK TO THE SEPTA PROJECT MANAGER.
16. COMPLY WITH ALL SEPTA SAFETY STANDARDS AND INCLUDE ALL COSTS TO TRAIN AND QUALIFY CONTRACTOR'S PERSONNEL IN SEPTA SAFETY STANDARDS. SEE GENERAL CONDITIONS OF THE SPECIFICATIONS.
17. REVIEW POTENTIAL ITEMS FOR SALVAGE AND RETENTION BY SEPTA WITH THE SEPTA PROJECT MANAGER PRIOR TO REMOVAL TO DETERMINE DISPOSITION.
18. THESE DRAWINGS SHOW HVAC AND PLUMBING WORK. SEE FPXXX DRAWINGS FOR FIRE SUPPRESSION WORK.

50% SUBMISSION
NOT FOR CONSTRUCTION

SOUTHEASTERN PENNSYLVANIA TRANSPORTATION AUTHORITY
EM&C DIVISION
1234 MARKET ST, 13TH FL.
PHILADELPHIA, PA 19107

CHIEF ENGINEER - EM&C
CHIEF ENGINEERING OFFICER - B&B
CHIEF RAIL TRANSIT OFFICER
SYSTEM SAFETY
DIRECTOR OF ENGINEERING - B&B
MANAGER - ARCH / ENGINEERING
PROJECT MANAGER

HDR Engineering, Inc.
Philadelphia, PA

ARORA ENGINEERS
65 WILMINGTON-WEST CHESTER PIKE
CHADDS FORD, PA 19317
PHONE 610.485.3600
FAX 610.485.3900

REV	DATE	DESCRIPTION	BY	CK'D	APD

DATE PRINTED: 10/21/2025

PARK
SUBWAY/ELEVATED TRAINS
TRACTION POWER SUBSTATION REHABILITATION
MECHANICAL
GENERAL NOTES, SYMBOLS & ABBREVIATIONS

SCALE: AS SHOWN	SCALE FACTOR: 1:1
DATE: 08/22/2025	DRAWN BY: DNP / CHECKED BY: DJM
WORK ORDER NO.: 276482	
SHEET NUMBER: **M200**	
DWG. NO.: 1 OF 12	
SHT. NO.: 180 OF 452	
ARCHIVE NO.:	
COMPUTER FILE NO.: 17AN-M200	REV. NO.: ---

STATUS: 50% SUBMISSION

C:\PW\WORKING\PITTD\17319117AN-M200.DWG

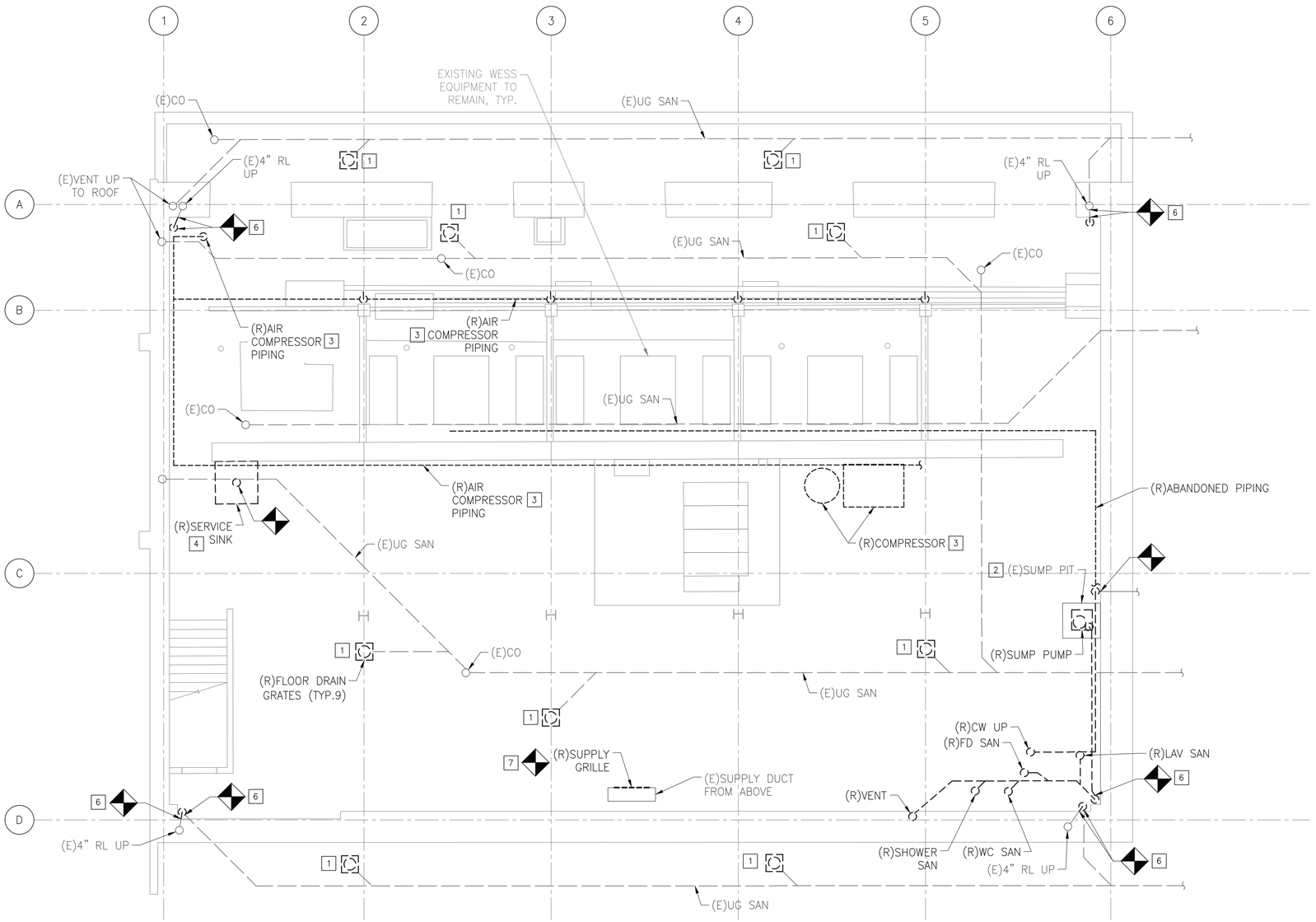

1 M201 DEMOLITION BASEMENT FLOOR PLAN
SCALE: 3/16" = 1'-0"

GENERAL NOTES:

1. REFER TO DRAWING M200 FOR GENERAL NOTES, SYMBOLS AND ABBREVIATIONS.
2. REFER TO DRAWING M210 FOR SCHEDULES AND CONTROLS.
3. REFER TO DRAWING M211 FOR DETAILS.

KEYED NOTES:

1. REMOVE FLOOR DRAIN GRATE. FLUSH THE ENTIRE UNDERGROUND SANITARY SYSTEM PRIOR TO INSTALLING A NEW DRAIN GRATE.
2. THOROUGHLY CLEAN THE SUMP PIT PRIOR TO INSTALLING NEW DUPLEX SUMP PUMP.
3. THE CONTRACTOR SHALL LOCATE ALL COMPRESSED AIR PIPING THROUGHOUT THE BUILDING AND REMOVE IT ALONG WITH THE AIR COMPRESSOR AND CONNECTED APPURTENANCES.
4. REMOVE SERVICE SINK ALONG WITH ALL CONNECTED APPURTENANCES. REMOVE SANITARY PIPING ABOVE FLOOR. THOROUGHLY CLEAN UNDERGROUND SANITARY PIPING PRIOR TO CONNECTING NEW MOP SINK.
5. THE CONTRACTOR SHALL LOCATE ALL ABANDONED SANITARY AND COLD WATER PIPING THROUGHOUT THE BUILDING AND REMOVE IT TO IT'S ENTIRETY.
6. THOROUGHLY CLEAN UNDERGROUND SANITARY PIPING PRIOR TO INSTALLING NEW PIPES.
7. BEFORE START OF WORK, MEASURE AND RECORD (E) AIRFLOW RATE. REMOVE SUPPLY GRILLE. THOROUGHLY CLEAN ENTIRE DUCTWORK.

6 4 2 0 6
SCALE: 3/16"=1'0"

50% SUBMISSION
NOT FOR CONSTRUCTION

SOUTHEASTERN PENNSYLVANIA TRANSPORTATION AUTHORITY
EM&C DIVISION
1234 MARKET ST, 13TH FL.
PHILADELPHIA, PA 19107

CHIEF ENGINEER - EM&C
CHIEF ENGINEERING OFFICER - B&B
CHIEF RAIL TRANSIT OFFICER
SYSTEM SAFETY
DIRECTOR OF ENGINEERING - B&B
MANAGER - ARCH / ENGINEERING
PROJECT MANAGER

HDR Engineering, Inc.
Philadelphia, PA

ARORA ENGINEERS
81 WILMINGTON WEST CHESTER PIKE
CHADDS FORD, PA 19317
PHONE 610.485.3600
FAX 610.485.7900

REV	DATE	DESCRIPTION	BY	CKD	APD

DATE PRINTED: 10/21/2025

PARK
SUBWAY/ELEVATED TRAINS
TRACTION POWER SUBSTATION REHABILITATION
MECHANICAL
DEMOLITION BASEMENT FLOOR PLAN

SCALE: AS SHOWN
SCALE FACTOR: 1:1
DATE: 08/22/2025
DRAWN BY: DNP
CHECKED BY: DJM
WORK ORDER NO.: 276482
SHEET NUMBER: **M201**
DWG. NO.: 2 OF 12
SHT. NO.: 181 OF 452
ARCHIVE NO.:
COMPUTER FILE NO.: 17AN-M201
REV. NO.: ---

STATUS: 50% SUBMISSION

C:\PW\WORKING\PITTDI\7319117AN\M201.DWG

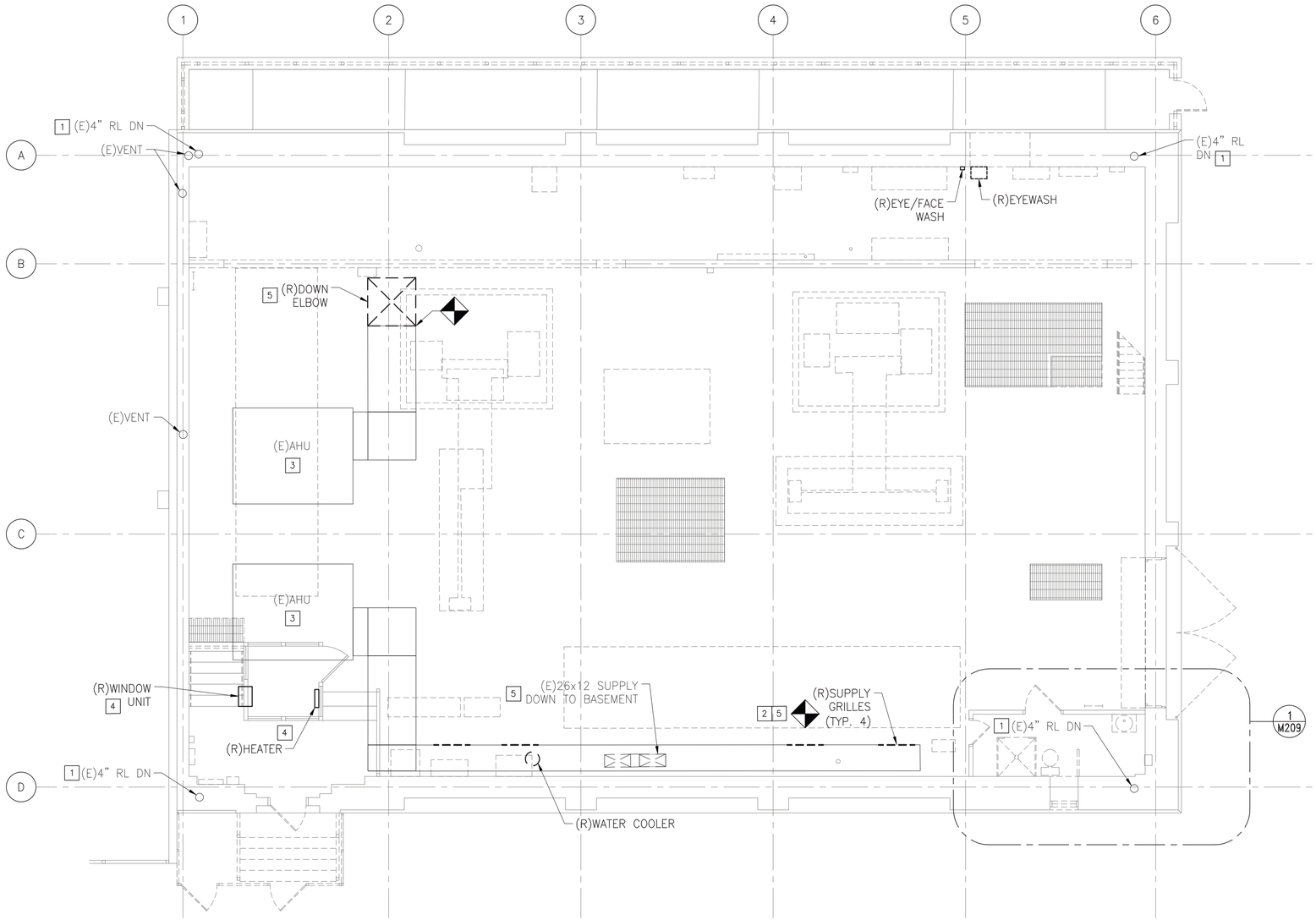

1 M202 DEMOLITION FIRST FLOOR PLAN
SCALE: 3/16" = 1'-0"

GENERAL NOTES:

1. REFER TO DRAWING M200 FOR GENERAL NOTES, SYMBOLS AND ABBREVIATIONS.
2. REFER TO DRAWING M210 FOR SCHEDULES AND CONTROLS.
3. REFER TO DRAWING M211 FOR DETAILS.

KEYED NOTES:

1. REMOVE RAIN LEADER FROM THE ROOF DRAIN DISCHARGE LOCATION TO THE LOCATION WITHIN THE WALL AS SHOWN. CLEAN THE VERTICAL LEADER WITHIN THE WALL PRIOR TO INSTALLING A NEW LEADER.
2. REMOVE ALL SUPPLY GRILLES. THOROUGHLY CLEAN THE ENTIRE DUCTWORK.
3. REMOVE CURRENT ROLL FILTER ASSEMBLY AND BELT DRIVEN MOTOR. THE CONTRACTOR SHALL THOROUGHLY CLEAN THE ENTIRE AIR HANDLING UNIT INCLUDING BUT NOT LIMITED TO THE FAN AND THE OUTSIDE AIR INTAKE.
4. REMOVE HEATER, WINDOW UNIT AND THE CONNECTED APPURTENANCES.
5. BEFORE START OF WORK, MEASURE AND RECORD (E) AIRFLOW RATE.

6 4 2 0 6
SCALE: 3/16"=1'0"

50% SUBMISSION
NOT FOR CONSTRUCTION

SOUTHEASTERN PENNSYLVANIA TRANSPORTATION AUTHORITY
EM&C DIVISION
1234 MARKET ST, 13TH FL.
PHILADELPHIA, PA 19107

CHIEF ENGINEER - EM&C
CHIEF ENGINEERING OFFICER - B&B
CHIEF RAIL TRANSIT OFFICER
SYSTEM SAFETY
DIRECTOR OF ENGINEERING - B&B
MANAGER - ARCH / ENGINEERING
PROJECT MANAGER

HDR Engineering, Inc.
Philadelphia, PA
ARORA ENGINEERS
61 WILMINGTON WEST CHESTER PIKE
CHADDS FORD, PA 19317
PHONE 610.485.3600
FAX 610.485.3900

REV	DATE	DESCRIPTION	BY	CK'D	APD

DATE PRINTED: 10/21/2025

PARK
SUBWAY/ELEVATED TRAINS
TRACTION POWER SUBSTATION REHABILITATION
MECHANICAL
DEMOLITION FIRST FLOOR PLAN

SCALE: AS SHOWN
SCALE FACTOR: 1:1
DATE: 08/22/2025
DRAWN BY: DNP
CHECKED BY: DJM
WORK ORDER NO.: 276482
SHEET NUMBER: **M202**
DWG. NO.: 3 OF 12
SHT. NO.: 182 OF 452
ARCHIVE NO.:
COMPUTER FILE NO.: 17AN-M202
REV. NO.: ----

STATUS: 50% SUBMISSION

C:\PWWORKING\PITTID1731191\17AN-M202.DWG

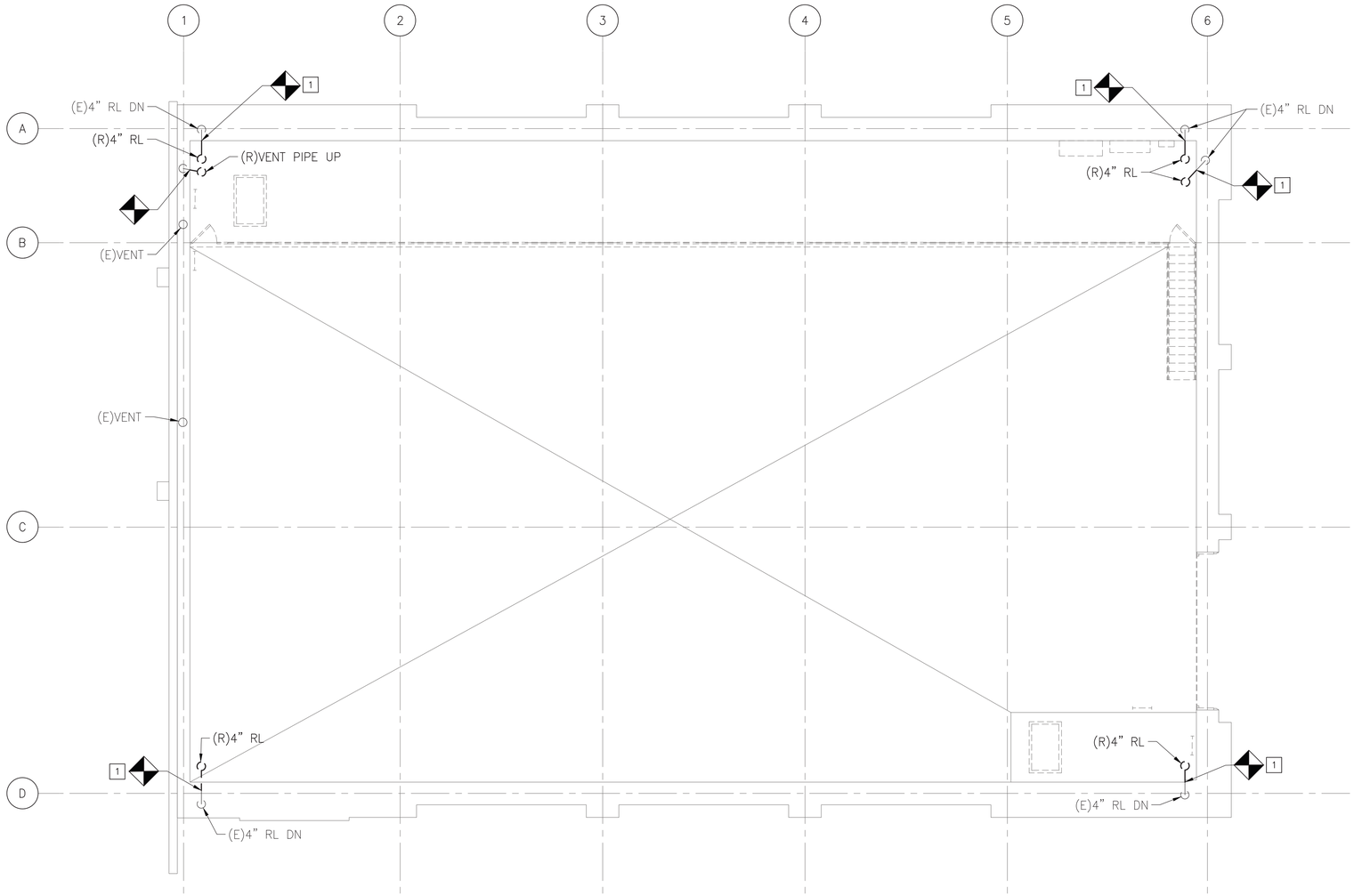

1 M203 DEMOLITION MEZZANINE FLOOR PLAN
SCALE: 3/16" = 1'-0"

GENERAL NOTES:

1. REFER TO DRAWING M200 FOR GENERAL NOTES, SYMBOLS AND ABBREVIATIONS.
2. REFER TO DRAWING M210 FOR SCHEDULES AND CONTROLS.
3. REFER TO DRAWING M211 FOR DETAILS.

KEYED NOTES:

1 REMOVE RAIN LEADER FROM THE ROOF DRAIN DISCHARGE LOCATION TO THE LOCATION WITHIN WALL AS SHOWN. CLEAN THE VERTICAL LEADER WITHIN THE WALL PRIOR TO INSTALLING A NEW LEADER.

6 4 2 0 6
SCALE: 3/16"=1'0"

50% SUBMISSION
NOT FOR CONSTRUCTION

SOUTHEASTERN PENNSYLVANIA TRANSPORTATION AUTHORITY
EM&C DIVISION
1234 MARKET ST, 13TH FL.
PHILADELPHIA, PA 19107

CHIEF ENGINEER - EM&C
CHIEF ENGINEERING OFFICER - B&B
CHIEF RAIL TRANSIT OFFICER
SYSTEM SAFETY
DIRECTOR OF ENGINEERING - B&B
MANAGER - ARCH / ENGINEERING
PROJECT MANAGER

HDR Engineering, Inc.
Philadelphia, PA

ARORA ENGINEERS
81 WILMINGTON WEST CHESTER PIKE
CHADDS FORD, PA 19317
PHONE 610.485.3600
FAX 610.485.7900

REV	DATE	DESCRIPTION	BY	CK'D	APP'D

DATE PRINTED: 10/21/2025

PARK
SUBWAY/ELEVATED TRAINS
TRACTION POWER SUBSTATION REHABILITATION
MECHANICAL
DEMOLITION MEZZANINE FLOOR PLAN

SCALE: AS SHOWN
SCALE FACTOR: 1:1
DATE: 08/22/2025
DRAWN BY: DNP
CHECKED BY: DJM
WORK ORDER NO.: 276482
SHEET NUMBER: **M203**
DWG. NO.: 4 OF 14
SHT. NO.: 183 OF 452
ARCHIVE NO.:
COMPUTER FILE NO.: 17AN-M203
REV. NO.: ----

C:\PW\WORKING\PITTD\7319117AN-M203.DWG

STATUS: 50% SUBMISSION

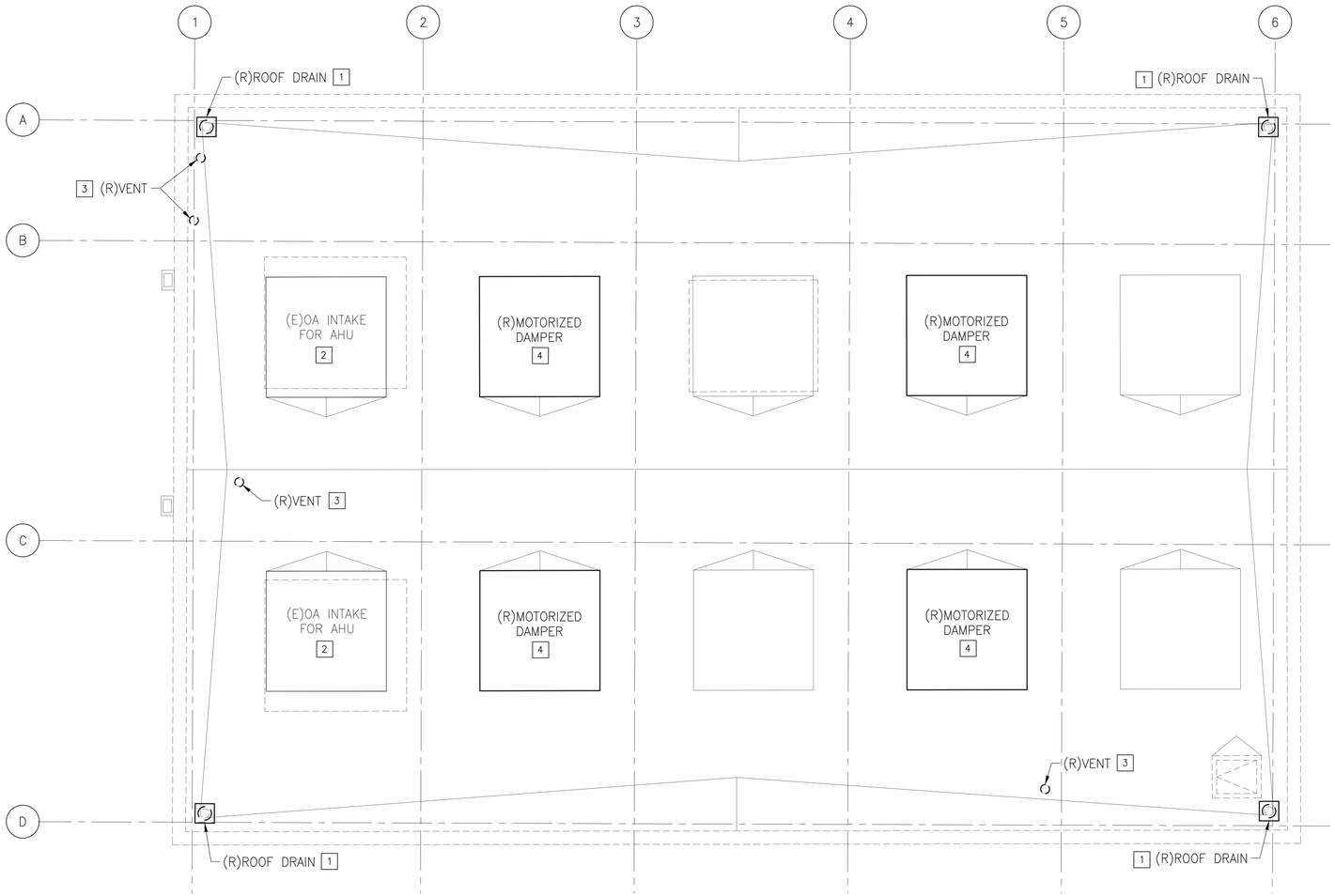

1 M204 DEMOLITION ROOF PLAN
SCALE: 3/16" = 1'-0"

GENERAL NOTES:

1. REFER TO DRAWING M200 FOR GENERAL NOTES, SYMBOLS AND ABBREVIATIONS.
2. REFER TO DRAWING M210 FOR SCHEDULES AND CONTROLS.
3. REFER TO DRAWING M211 FOR DETAILS.

KEYED NOTES:

1 REMOVE ROOF DRAIN. CLEAN VERTICAL LEADER WITHIN THE WALL PRIOR TO INSTALLING A NEW ROOF DRAIN.

2 THOROUGHLY CLEAN OUTDOOR AIR INTAKE OPENING AND DUCTWORK PRIOR TO INSTALLING NEW ROOF CAP.

3 REMOVE ENTIRE LENGTH OF EXPOSED VENT PIPE. THOROUGHLY CLEAN THE ENTIRE LENGTH OF VENT PIPE WITHIN WALL PRIOR TO INSTALLING A NEW PIPE.

4 REMOVE EXISTING MOTORIZED DAMPER AND ALL CONNECTED APPURTENANCES.

6 4 2 0 6
SCALE: 3/16"=1'0"

50% SUBMISSION
NOT FOR CONSTRUCTION

SOUTHEASTERN PENNSYLVANIA TRANSPORTATION AUTHORITY
EM&C DIVISION
1234 MARKET ST, 13TH FL,
PHILADELPHIA, PA 19107

CHIEF ENGINEER - EM&C
CHIEF ENGINEERING OFFICER - B&B
CHIEF RAIL TRANSIT OFFICER
SYSTEM SAFETY
DIRECTOR OF ENGINEERING - B&B
MANAGER - ARCH / ENGINEERING
PROJECT MANAGER

HDR Engineering, Inc.
Philadelphia, PA
ARORA ENGINEERS
81 MILLBROOK WEST CHESTER
PKWY
CHADDS FORD, PA 19317
PHONE 610.459.2600
FAX 610.459.2900

REV	DATE	DESCRIPTION	BY	CK'D	APP'D

DATE PRINTED: 10/21/2025

PARK
SUBWAY/ELEVATED TRAINS
TRACTION POWER SUBSTATION REHABILITATION
MECHANICAL
DEMOLITION ROOF PLAN

SCALE: AS SHOWN	SCALE FACTOR: 1:1
DATE: 08/22/2025	DRAWN BY: DNP
	CHECKED BY: DJM
WORK ORDER NO.: 276482	
SHEET NUMBER: **M204**	
DWG. NO.: 5 OF 12	
SHT. NO.: 184 OF 452	
ARCHIVE NO.:	
COMPUTER FILE NO.: 17AN-M204	REV. NO.: ----

STATUS: 50% SUBMISSION

C:\PWWORKING\PITTD\73119117AN-M204.DWG

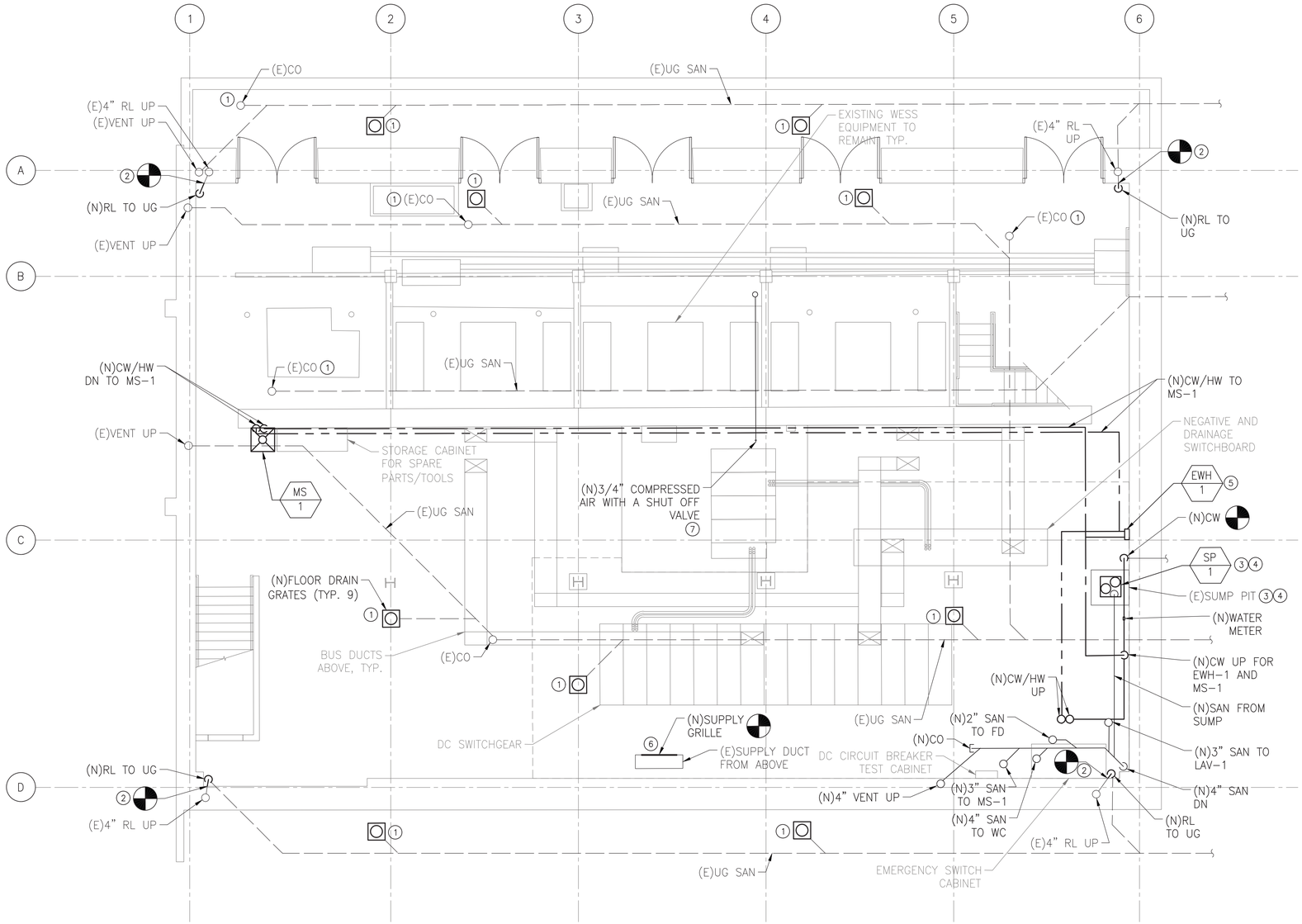

1 M205 PROPOSED BASEMENT FLOOR PLAN
SCALE: 3/16" = 1'-0"

GENERAL NOTES:

1. REFER TO DRAWING M200 FOR GENERAL NOTES, SYMBOLS AND ABBREVIATIONS.
2. REFER TO DRAWING M210 FOR SCHEDULES AND CONTROLS.
3. REFER TO DRAWING M211 FOR DETAILS.

KEYED NOTES:

1. THOROUGHLY CLEAN THE UNDERGROUND SANITARY PIPING FROM THE FLOOR DRAIN OPENINGS AND THE CLEANOUTS PROVIDED PRIOR TO INSTALLING NEW FLOOR DRAIN GRATES.
2. THOROUGHLY CLEAN THE RAIN LEADER WITHIN THE WALL PRIOR TO CONNECTING NEW PIPING.
3. THOROUGHLY CLEAN THE SUMP PIT AND PIPING WITHIN SUMP PIT PRIOR TO INSTALLING NEW SUMP PUMP.
4. PROVIDE DUPLEX SUMP PUMP. BOTH PUMPS SHALL BE SAME MODEL AS DESCRIBED IN THE SCHEDULE.
5. MOUNT INSTANT HOT WATER HEATER ON THE WALL TIGHT TO CEILING. PROVIDE NECESSARY CLEARANCE AS REQUIRED BY THE MANUFACTURER.
6. REBALANCE TO ORIGINAL AIRFLOW RATE PREVIOUSLY MEASURED.
7. AVOID INTERFERENCE WITH THE EXISTING WESS EQUIPMENT.

6 4 2 0 6
SCALE: 3/16"=1'0"

50% SUBMISSION
NOT FOR CONSTRUCTION

SOUTHEASTERN PENNSYLVANIA TRANSPORTATION AUTHORITY
EM&C DIVISION
1234 MARKET ST, 13TH FL,
PHILADELPHIA, PA 19107

CHIEF ENGINEER - EM&C
CHIEF ENGINEERING OFFICER - B&B
CHIEF RAIL TRANSIT OFFICER
SYSTEM SAFETY
DIRECTOR OF ENGINEERING - B&B
MANAGER - ARCH / ENGINEERING
PROJECT MANAGER

HDR Engineering, Inc.
Philadelphia, PA

ARORA ENGINEERS
61 WILMINGTON WEST CHESTER PIKE
CHADDS FORD, PA 19317
PHONE 610.485.2600
FAX 610.485.7900

REV	DATE	DESCRIPTION	BY	CKD	APD

DATE PRINTED: 10/21/2025

PARK
SUBWAY/ELEVATED TRAINS
TRACTION POWER SUBSTATION REHABILITATION
MECHANICAL
PROPOSED BASEMENT FLOOR PLAN

SCALE: AS SHOWN	SCALE FACTOR: 1:1
DATE: 08/22/2025	DRAWN BY: DNP
	CHECKED BY: DJM

WORK ORDER NO.: 276482
SHEET NUMBER: **M205**
DWG. NO.: 6 OF 12
SHT. NO.: 185 OF 452
ARCHIVE NO.:
COMPUTER FILE NO.: 17AN-M205
REV. NO.: ---

STATUS: 50% SUBMISSION

C:\PW\WORKING\PITTD173119117AN-M205.DWG

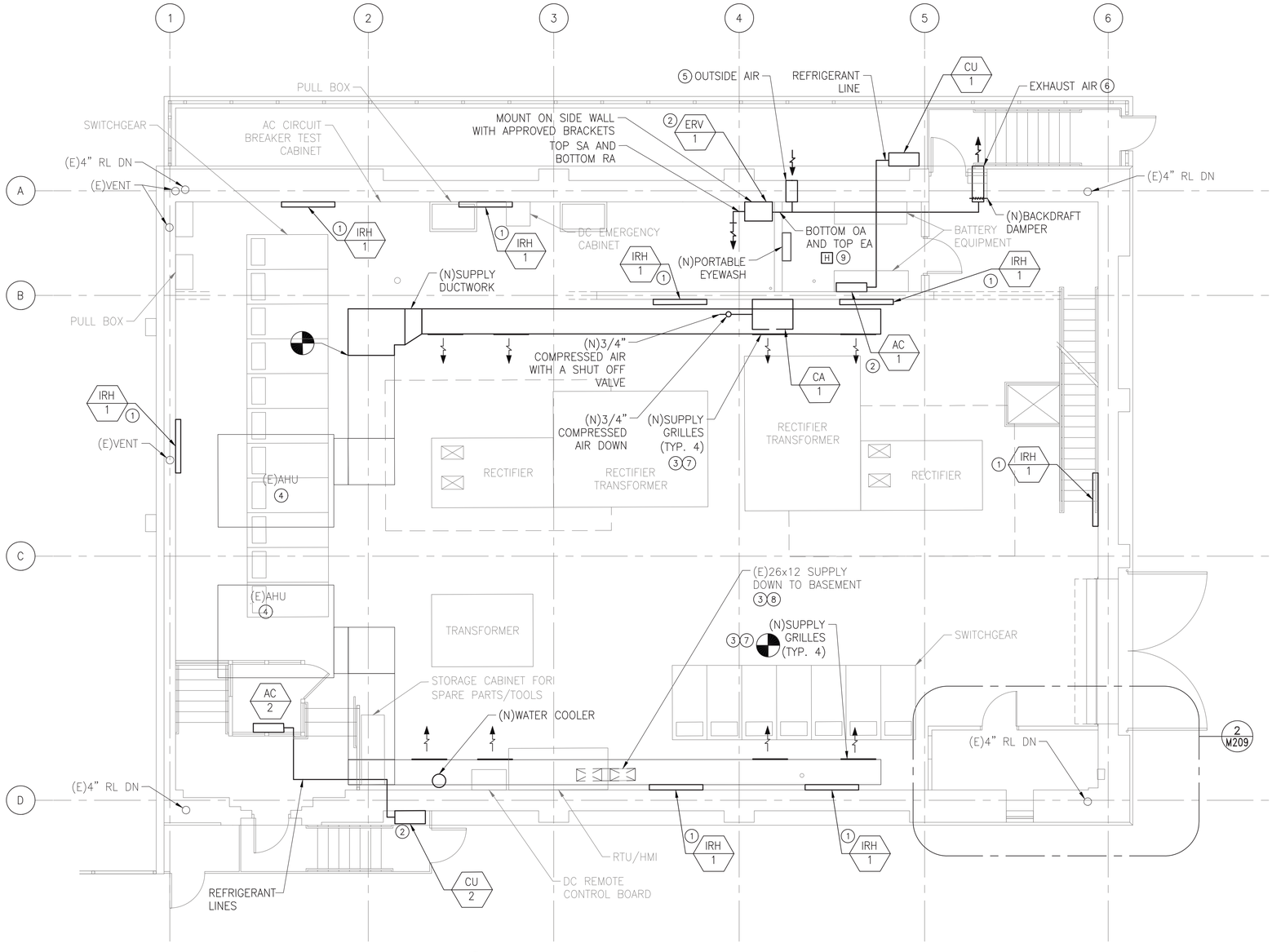

1 M206 PROPOSED FIRST FLOOR PLAN
SCALE: 3/16" = 1'-0"

GENERAL NOTES:

1. REFER TO DRAWING M200 FOR GENERAL NOTES, SYMBOLS AND ABBREVIATIONS.
2. REFER TO DRAWING M210 FOR SCHEDULES AND CONTROLS.
3. REFER TO DRAWING M211 FOR DETAILS.

KEYED NOTES:

(1) CONTROL INFRARED RADIANT HEATERS WITH A ON/OFF/AUTO CONTROL PANEL. MOUNT HEATERS BELOW DUCTWORK. HEATERS SHALL BE ANGLED TOWARDS THE FLOOR.

(2) INTERLOCK THE ENERGY RECOVERY VENTILATOR AND SPLIT UNIT WITH A CONTROL PANEL.

(3) THOROUGHLY CLEAN THE DUCTWORK PRIOR TO INSTALLING NEW SUPPLY GRILLES.

(4) THOROUGHLY CLEAN THE AIR HANDLING UNIT PRIOR TO INSTALLING NEW FILTER MEDIA AND MOTOR.

(5) PROVIDE AN INTAKE LOUVER FOR THE OUTSIDE AIR OPENING.

(6) PROVIDE AN EXHAUST LOUVER WITH A BACKDRAFT DAMPER.

(7) REBALANCE TO 1/4 OF ORIGINAL AIRFLOW RATE PREVIOUSLY MEASURED.

(8) REBALANCE TO ORIGINAL AIRFLOW RATE PREVIOUSLY MEASURED.

(9) THE CONTRACTOR TO DESIGN A HYDROGEN DETECTION SYSTEM FOR BATTERY ROOM.

6 4 2 0 6
SCALE: 3/16"=1'0"

50% SUBMISSION
NOT FOR CONSTRUCTION

SOUTHEASTERN PENNSYLVANIA TRANSPORTATION AUTHORITY
EM&C DIVISION
1234 MARKET ST, 13TH FL,
PHILADELPHIA, PA 19107

CHIEF ENGINEER - EM&C
CHIEF ENGINEERING OFFICER - B&B
CHIEF RAIL TRANSIT OFFICER
SYSTEM SAFETY
DIRECTOR OF ENGINEERING - B&B
MANAGER - ARCH / ENGINEERING
PROJECT MANAGER

HDR Engineering, Inc.
Philadelphia, PA

ARORA
ARORA ENGINEERS
15 WELLINGTON-WEST CHESTER PIKE
CHADDS FORD, PA 19317
PHONE: 610.872.7600
FAX: 610.872.7601

REV	DATE	DESCRIPTION	BY	CKD	APD

DATE PRINTED: 10/21/2025

PARK
SUBWAY/ELEVATED TRAINS
TRACTION POWER SUBSTATION REHABILITATION
MECHANICAL
PROPOSED FIRST FLOOR PLAN

SCALE: AS SHOWN	SCALE FACTOR: 1:1
DATE: 08/22/2025	DRAWN BY: DNP / CHECKED BY: DJM
WORK ORDER NO.: 276482	
SHEET NUMBER: **M206**	
DWG. NO.: 7 OF 12	
SHT. NO.: 186 OF 452	
ARCHIVE NO.:	
COMPUTER FILE NO.: 17AN-M206	REV. NO: ----

STATUS: 50% SUBMISSION

C:\PW\WORKING\PITTD\17311911\17AN-M206.DWG

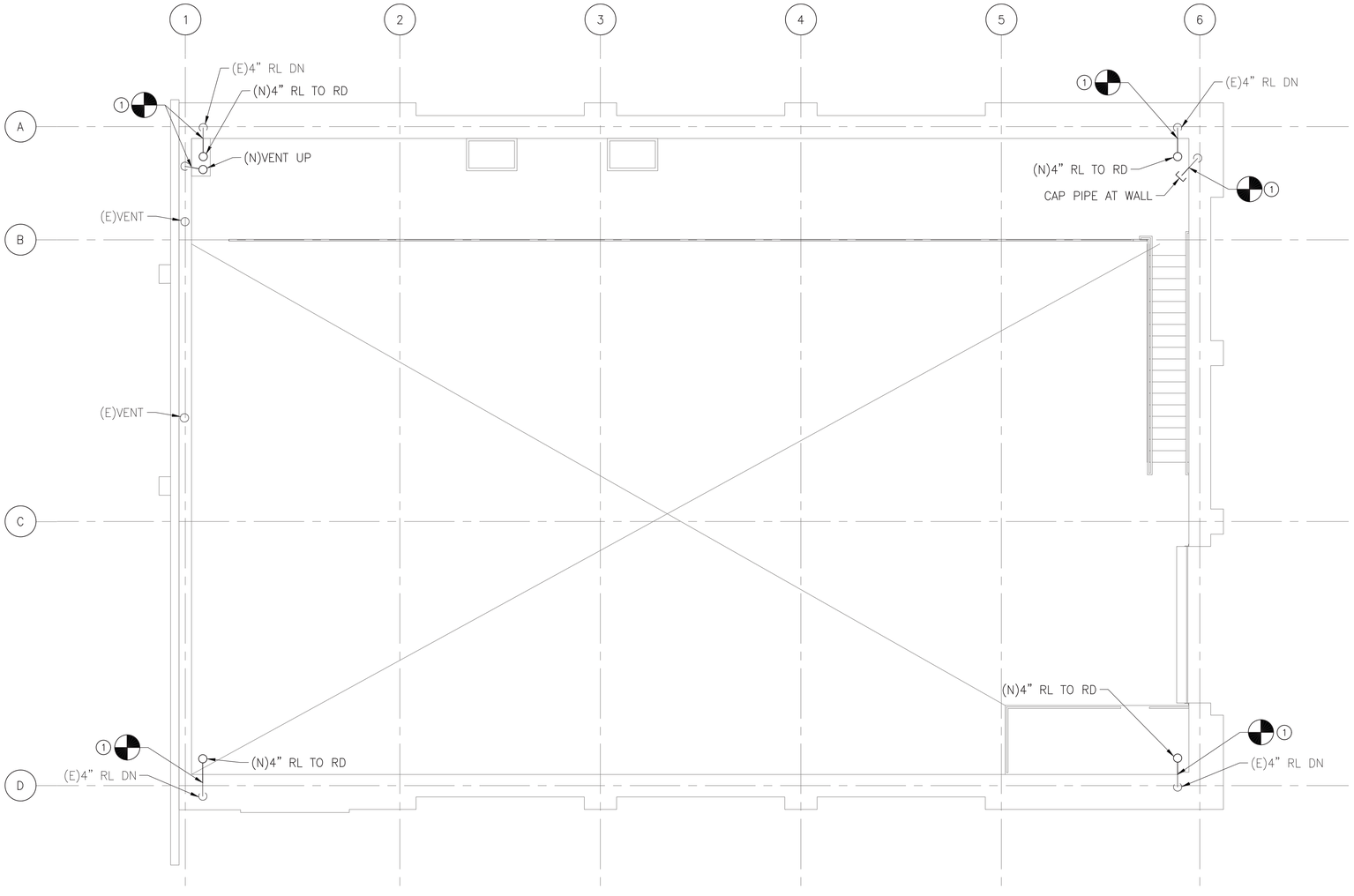

1 M207 PROPOSED MEZZANINE FLOOR PLAN
SCALE: 3/16" = 1'-0"

GENERAL NOTES:

1. REFER TO DRAWING M200 FOR GENERAL NOTES, SYMBOLS AND ABBREVIATIONS.
2. REFER TO DRAWING M210 FOR SCHEDULES AND CONTROLS.
3. REFER TO DRAWING M211 FOR DETAILS.

KEYED NOTES:

(1) THOROUGHLY CLEAN PIPING WITHIN THE WALL PRIOR TO CONNECTING NEW PIPING.

6 4 2 0 6
SCALE: 3/16"=1'0"

50% SUBMISSION
NOT FOR CONSTRUCTION

SOUTHEASTERN PENNSYLVANIA TRANSPORTATION AUTHORITY
EM&C DIVISION
1234 MARKET ST, 13TH FL,
PHILADELPHIA, PA 19107

CHIEF ENGINEER - EM&C
CHIEF ENGINEERING OFFICER - B&B
CHIEF RAIL TRANSIT OFFICER
SYSTEM SAFETY
DIRECTOR OF ENGINEERING - B&B
MANAGER - ARCH / ENGINEERING
PROJECT MANAGER

HDR Engineering, Inc.
Philadelphia, PA

ARORA
ARORA ENGINEERS
15 WELLINGTON-WEST CHESTER PIKE
CHADDS FORD, PA 19317
PHONE: 610.872.7600
FAX: 610.459.7490

REV	DATE	DESCRIPTION	BY	CKD	APD

DATE PRINTED: 10/21/2025

PARK
SUBWAY/ELEVATED TRAINS
TRACTION POWER SUBSTATION REHABILITATION
MECHANICAL
PROPOSED MEZZANINE FLOOR PLAN

SCALE: AS SHOWN	SCALE FACTOR: 1:1
DATE: 08/22/2025	DRAWN BY: DNP
	CHECKED BY: DJM

WORK ORDER NO.: 276482

SHEET NUMBER
M207

DWG. NO.:	8	OF	12
SHT. NO.:	187	OF	452

ARCHIVE NO.:

COMPUTER FILE NO.: 17AN-M207
REV. NO.: ----

STATUS: 50% SUBMISSION

C:\PW\WORKING\PITTD\17311911\17AN-M207.DWG

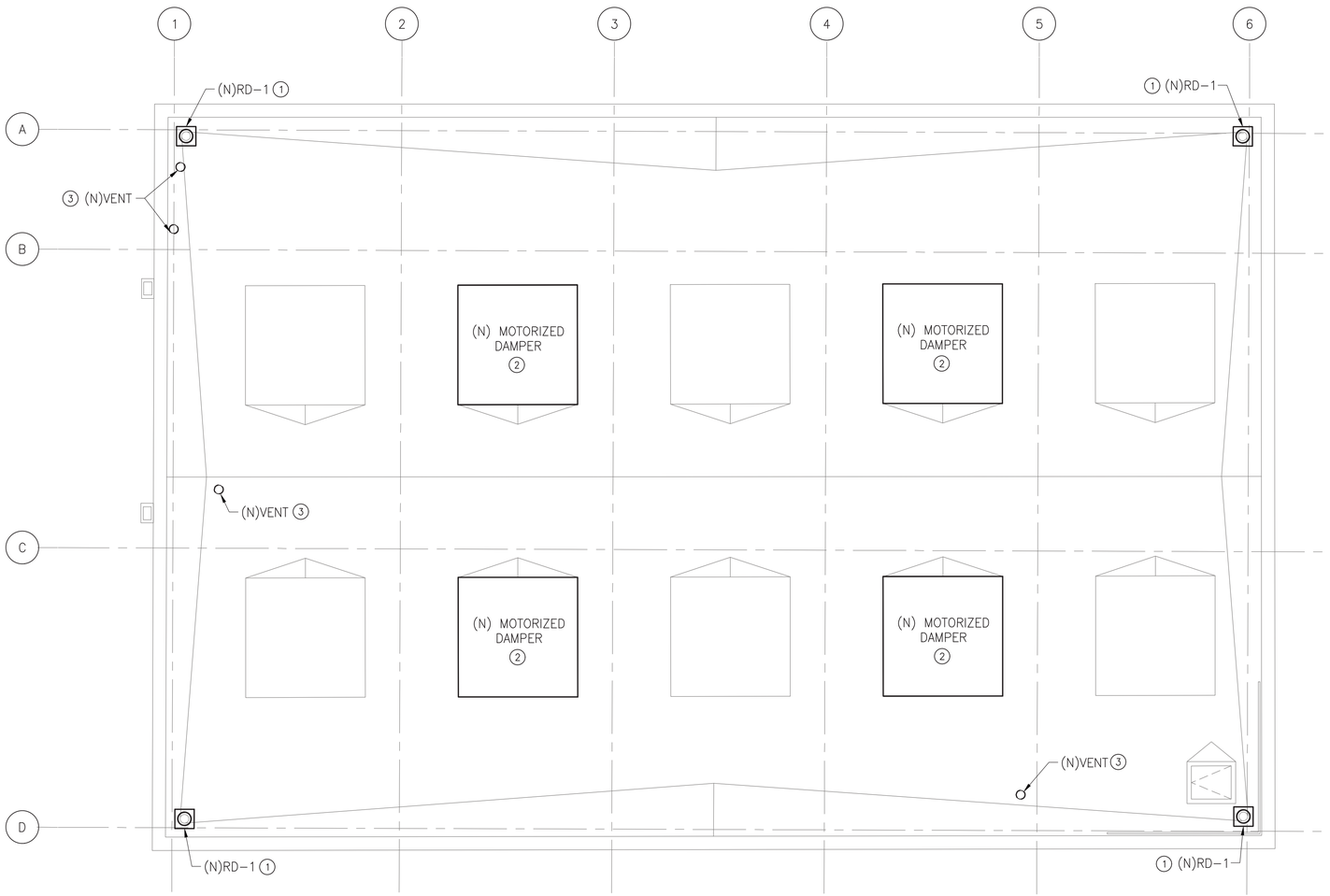

1 M208 PROPOSED ROOF PLAN
SCALE: 3/16" = 1'-0"

GENERAL NOTES:

1. REFER TO DRAWING M200 FOR GENERAL NOTES, SYMBOLS AND ABBREVIATIONS.
2. REFER TO DRAWING M210 FOR SCHEDULES AND CONTROLS.
3. REFER TO DRAWING M211 FOR DETAILS.

KEYED NOTES:

1. THOROUGHLY CLEAN RAIN LEADERS WITHIN THE WALL PRIOR TO CONNECTING NEW ROOF DRAIN.
2. PROVIDE NEW MOTORIZED DAMPERS WITH SAME PROPERTIES AS THE EXISTING DAMPERS. PROVIDE NECESSARY MOUNTING BRACKETS AND APPARATUS TO HAVE FULLY FUNCTIONAL DAMPERS.
3. THOROUGHLY CLEAN OUTDOOR AIR INTAKE OPENING AND DUCTWORK PRIOR TO INSTALLING NEW ROOF CAP.

6 4 2 0 6
SCALE: 3/16"=1'0"

50% SUBMISSION
NOT FOR CONSTRUCTION

SOUTHEASTERN PENNSYLVANIA TRANSPORTATION AUTHORITY
EM&C DIVISION
1234 MARKET ST, 13TH FL.
PHILADELPHIA, PA 19107

CHIEF ENGINEER - EM&C
CHIEF ENGINEERING OFFICER - B&B
CHIEF RAIL TRANSIT OFFICER
SYSTEM SAFETY
DIRECTOR OF ENGINEERING - B&B
MANAGER - ARCH / ENGINEERING
PROJECT MANAGER

HDR Engineering, Inc.
Philadelphia, PA
ARORA ENGINEERS
65 WILMINGTON-WEST CHESTER PIKE
CHADDS FORD, PA 19317
PHONE 610.459.2600
FAX 610.459.2900

REV	DATE	DESCRIPTION	BY	CKD	APD

DATE PRINTED: 10/21/2025

PARK
SUBWAY/ELEVATED TRAINS
TRACTION POWER SUBSTATION REHABILITATION
MECHANICAL
PROPOSED ROOF PLAN

SCALE: AS SHOWN
SCALE FACTOR: 1:1
DATE: 08/22/2025
DRAWN BY: DNP
CHECKED BY: DJM
WORK ORDER NO.: 276482
SHEET NUMBER: **M208**
DWG. NO.: 9 OF 12
SHT. NO.: 188 OF 452
ARCHIVE NO.:
COMPUTER FILE NO.: 17AN-M208
REV. NO.: ---

STATUS: 50% SUBMISSION

C:\PW\WORKINGPITTD\17319\117AN-M208.DWG

GENERAL NOTES:

1. REFER TO DRAWING M200 FOR GENERAL NOTES, SYMBOLS AND ABBREVIATIONS.
2. REFER TO DRAWING M210 FOR SCHEDULES AND CONTROLS.
3. REFER TO DRAWING M211 FOR DETAILS.

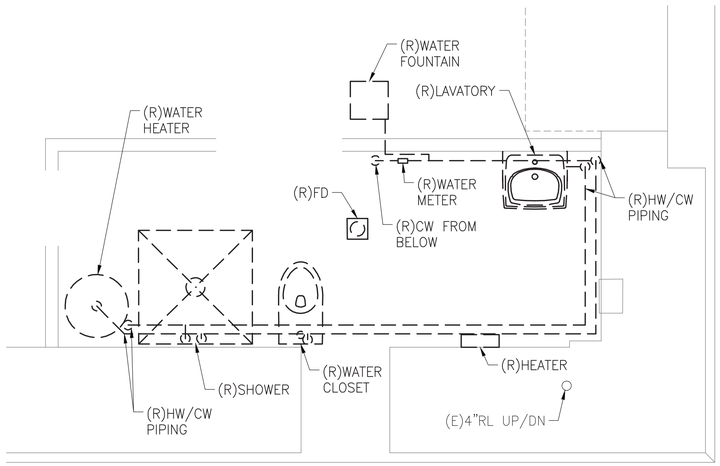

1 M209 RESTROOM REMOVAL PLAN
SCALE: 1/2" = 1'-0"

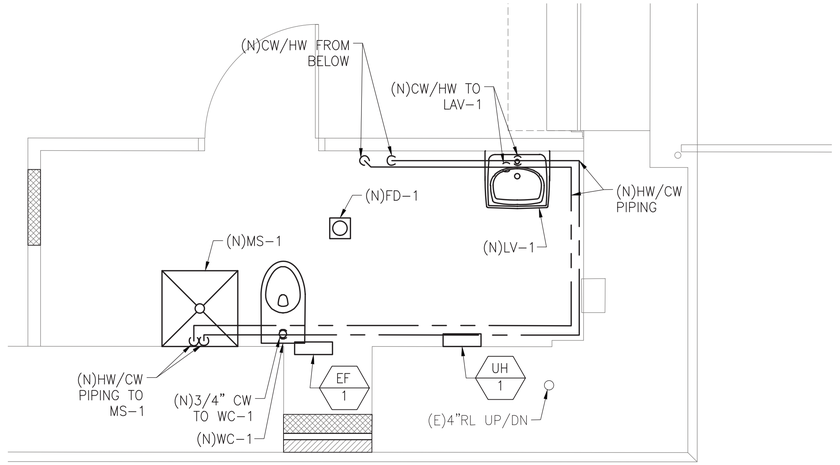

2 M209 RESTROOM PROPOSED PLAN
SCALE: 1/2" = 1'-0"

2 1 0 2
SCALE: 1/2"=1'-0"

50% SUBMISSION
NOT FOR CONSTRUCTION

SOUTHEASTERN PENNSYLVANIA TRANSPORTATION AUTHORITY
EM&C DIVISION
1234 MARKET ST, 13TH FL,
PHILADELPHIA, PA 19107

CHIEF ENGINEER - EM&C
CHIEF ENGINEERING OFFICER - B&B
CHIEF RAIL TRANSIT OFFICER
SYSTEM SAFETY
DIRECTOR OF ENGINEERING - B&B
MANAGER - ARCH / ENGINEERING
PROJECT MANAGER

HDR Engineering, Inc.
Philadelphia, PA

ARORA ENGINEERS
81 WILMINGTON WEST CHESTER PIKE
CHADDS FORD, PA 19317
PHONE 610.485.3600
FAX 610.485.7900

REV	DATE	DESCRIPTION	BY	CK'D	APP'D

DATE PRINTED: 10/21/2025

PARK
SUBWAY/ELEVATED TRAINS
TRACTION POWER SUBSTATION REHABILITATION
MECHANICAL
ENLARGED PLANS

SCALE: AS SHOWN
SCALE FACTOR: 1:1
DATE: 08/22/2025
DRAWN BY: DNP
CHECKED BY: DJM
WORK ORDER NO.: 276482
SHEET NUMBER: **M209**
DWG. NO.: 10 OF 12
SHT. NO.: 189 OF 452
ARCHIVE NO.:
COMPUTER FILE NO.: 17AN-M209
REV. NO.: ---

STATUS: 50% SUBMISSION

C:\PW\WORKING\PITTD\17319117AN-M209.DWG

ERV 1 — ENERGY RECOVERY VENTILATOR

TAG	LOCATION	FRESH AIR	EXHAUST	SUPPLY FAN			EXHAUST FAN			WHEEL	ENERGY RECOVERY WHEEL DATA – COOLING					ENERGY RECOVERY WHEEL DATA – HEATING			ELECTRICAL DATA			MAXIMUM DIMENSIONS	MAXIMUM	BASIS OF DESIGN		REMARKS
		CFM	CFM	EXT. SP. (IN WC)	QTY	FAN HP EACH	EXT. SP. (IN WC)	QTY	FAN HP EACH	MOTOR HP	EAT DB (F)	EAT WB (F)	LAT DB (F)	LAT WB (F)	EFFECTIVENESS (%)	EAT DB (F)	LAT DB (F)	EFFECTIVENESS (%)	V/Ø/HZ	MCA	MOCP	L x W x H (IN)	WEIGHT (LBS)	MANUFACTURER	MODEL	
ERV–1	BATTERY ROOM	440	440	0.5	1	1/4	0.5	1	1/4	–	93.2	78.3	82.2	69.4	60.7	12.6	47.4	60.7	120/1/60	8.6	15	40.2X28.6X17.9	160	GREENHECK	MINIVENT–450	SEE NOTES

NOTES:
1. PROVIDE SIDE WALL MOUNTING BRACKETS. INTERLOCK THE ENERGY RECOVERY VENTILATOR AND THE SPLIT UNIT TO OPERATE IN UNISON VIA A SINGLE THERMOSTAT.
2. REFER TO DRAWINGS FOR THE LOCATION AND QUANTITY.

SR – GRILLE/REGISTER/DIFFUSER SCHEDULE

TAG	DESCRIPTION	FRAME TYPE	CFM RANGE	AIR DEVICE SIZE	NECK SIZE	FACE SIZE	FINISH	MANUFACTURER & MODEL NO. (BASIS OF DESIGN)	REMARKS

IRH 1 — INFRARED RADIANT HEATER SCHEDULE

TAG	CAPACITY (KW)	LENGTH	WIDTH	ELEMENT TYPE	ELECTRICAL	AMPS	MANUFACTURER AND MODEL	REMARKS
IRH–1	3	55.4"	5.4"	FROSTED QUARTZ	208/1/60	14.4	FOSTORIA OCH–57–208V	11 LBS. WITH VERTICAL MOUNTING BRACKET

NOTES:
1. REFER TO DRAWINGS FOR THE LOCATION AND QUANTITY.

AC # — SPLIT SYSTEM SCHEDULE

TAG	AREA SERVED	TOTAL COOLING CAPACITY (MBH)	TOTAL HEATING CAPACITY (MBH)	SEER	REFRIGERANT	ELECTRICAL			MANUFACTURER & MODEL NO. (BASIS OF DESIGN)	REMARKS
						OUTDOOR MCA	BREAKER SIZE (A)	V/ø/HZ		
AC–1/ CU–1	BATTERY ROOM	12	14	22	R410A	25	15	208/1/60	MITSUBISHI MOD# MSZ–GL12NA–U1 FOR INDOOR AND MOD# MUZ–GL12NA–U1 FOR OUTDOOR	1
AC–2/ CU–2	OFFICE	9	10	N/A	R410A	25	15	208/1/60	MITSUBISHI MOD# MSZ–GL09NA–U1 FOR INDOOR AND MOD# MUZ–GL09NA–U1 FOR OUTDOOR	2

NOTES:
1. CONTROL SPLIT HEAT PUMP UNIT AND ENERGY RECOVERY VENTILATOR WITH A SINGLE THERMOSTAT USING A PROGRAMMABLE CONTROLLER.
2. CONTROL SPLIT HEAT PUMP UNIT WITH A UNIT MOUNTED THERMOSTAT.

PLUMBING SCHEDULE

TAG	DESCRIPTION	FIXTURE CONNECTION SIZE (IN)				MANUFACTURER & MODEL NO. (BASIS OF DESIGN)
		CW	HW	SAN	V	
WC–1	WATER CLOSET	3/4	–	3	2	AMERICAN STANDARD CADET FLOWISE MODEL 2462.100. VITREOUS CHINA, HIGH EFFICIENCY 1.1 GPF ULTRA–LOW CONSUMPTION, ELONGATED BOWL. PROVIDE AMERICAN STANDARD SEAT MODEL 5324.019.
LAV–1	LAVATORY	1/2	1/2	1 1/4	1 1/4	AMERICAN STANDARD LUCERNE WALL–HUNG (ADA) LAVATORY MODEL 0356.421, WALL MOUNTED SINGLE HOLE. 1 1/4" P–TRAP WITH GRID DRAIN 1/2" SUPPLIES WITH STOPS. PROVIDE AMERICAN STANDARD MODEL 1480100 FAUCET WITH A WATTS MODEL LFL1170–M2 MIXING VALVE. PROVIDE S–PRAP ASSEMBLY.
FD–1	FLOOR DRAIN	–	–	3	3	JAY R. SMITH MODEL NUMBER 2005Y ROUND TOP NICKEL BRONZE STRAINER(6"ROUND). PROVIDE P–TRAP FOR EACH DRAIN.
MS–1	MOP SINK	1/2	1/2	3	3	ZURN MODEL Z1996–24. SIZE 24" X 24". PROVIDE SERVICE SINK FAUCET ZURN MODEL Z1996–SF AND WATTS MODEL LFL1170–M2 MIXING VALVE.
RD–1	ROOF DRAIN			4		JAY R. SMITH MODEL NUMBER 1330Y–RDP WITH VANDAL PROOF DOME, UNDERDECK CLAMP–C AND EXTENSION.

EWH 1 — ELECTRIC WATER HEATER SCHEDULE

TAG	AREA SERVED	ELECTRICAL		MANUFACTURER & MODEL NO. (BASIS OF DESIGN)
		KW	V/ø/HZ	
EWH–1	TOILET ROOM AND BASEMENT	16	208/1/60	EEMAX ELECTRIC TANKLESS HOT WATER HEATER MODEL # EX1608TC ML

EUH 1 — UNIT HEATER SCHEDULE

TAG	BTU	CFM	POWER (KW)	V/Ø/HZ	MANUFACTURER & MODEL NO. (BASIS OF DESIGN)	REMARKS
EUH–1	6138	100	1	120/1/60	QMARK MOD# CWH3180F	SEE NOTES

NOTES:
1. REFER TO DRAWINGS FOR THE LOCATION AND QUANTITY.

CA 1 — AIR COMPRESSOR SCHEDULE

TAG	CAPACITY (GAL.)	MAX PSI	CFM@ 90PSI	HP	V/Ø/HZ	MANUFACTURER & MODEL NO. (BASIS OF DESIGN)	REMARKS
CA–1	80	140	16	5	208/1/60	CAMPBELL HAUSFELD MODEL TQ3104	SEE NOTES

NOTES:
1. REFER TO DRAWINGS FOR THE LOCATION AND QUANTITY.

EF 1 — EXHAUST FAN SCHEDULE

TAG	CFM	V/Ø/HZ	MANUFACTURER & MODEL NO. (BASIS OF DESIGN)	REMARKS
EF–1	180	120/1/60	BROAN WALL FAN MODEL 509	

SP 1 — SUMP PUMP SCHEDULE

TAG	AREA SERVED	GPM	HEAD (FT)	ELECTRICAL		MANUFACTURER & MODEL NO. (BASIS OF DESIGN)
				HP	V/ø/HZ	
SP–1	BASEMENT SUMP PIT	30	25	1/2	120/1/60	LIBERTY PUMPS MODEL 281–2, CLASS 25 CAST–IRON, VORTEX ENGINEERED IMPELLER, AUTOMATIC RESET, PROVIDE CONTROLS AND DISCONNECT SWITCH.

50% SUBMISSION
NOT FOR CONSTRUCTION

SOUTHEASTERN PENNSYLVANIA TRANSPORTATION AUTHORITY
EM&C DIVISION
1234 MARKET ST, 13TH FL, PHILADELPHIA, PA 19107

CHIEF ENGINEER - EM&C
CHIEF ENGINEERING OFFICER - B&B
CHIEF RAIL TRANSIT OFFICER
SYSTEM SAFETY
DIRECTOR OF ENGINEERING - B&B
MANAGER - ARCH / ENGINEERING
PROJECT MANAGER

HDR Engineering, Inc.
Philadelphia, PA

ARORA ENGINEERS
65 WILMINGTON–WEST CHESTER PIKE
CHADDS FORD, PA 19317
PHONE 610.485.3600
FAX 610.485.7900

REV	DATE	DESCRIPTION	BY	CK'D	APP'D

DATE PRINTED: 10/21/2025

PARK
SUBWAY/ELEVATED TRAINS
TRACTION POWER SUBSTATION REHABILITATION
MECHANICAL
SCHEDULES

SCALE: AS SHOWN	SCALE FACTOR: 1:1
DATE: 08/22/2025	DRAWN BY: DNP
WORK ORDER NO.: 276482	CHECKED BY: DJM
SHEET NUMBER: M210	
DWG. NO.: 11 OF 12	
SHT. NO.: 190 OF 452	
ARCHIVE NO.:	
COMPUTER FILE NO.: 17AN-M210	REV. NO.: ---

STATUS: 50% SUBMISSION

C:\PW\WORKING\PITTD\D7319\117AN-M210.DWG

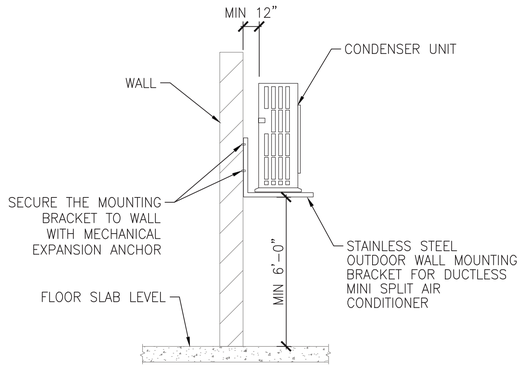

1 M211 CONDENSER WALL MOUNTING DETAIL
SCALE: NO SCALE

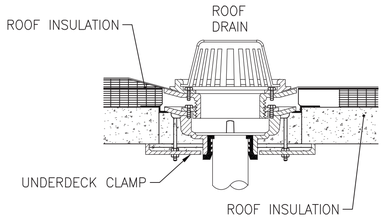

2 M211 ROOF DRAIN DETAIL
SCALE: NO SCALE

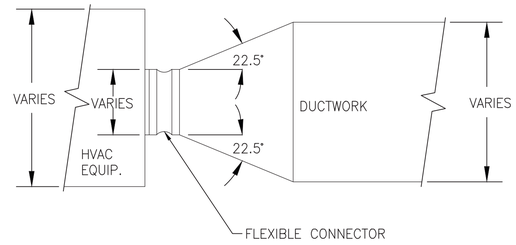

3 M211 TYPICAL SUPPLY DUCT TRANSITION
SCALE: NO SCALE

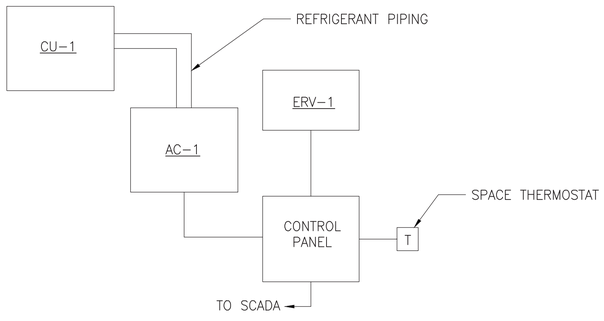

4 M211 BATTERY ROOM CONTROL DIAGRAM
SCALE: NO SCALE

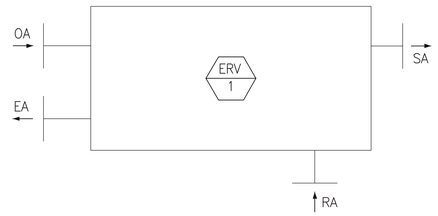

5 M211 ERV DUCT CONNECTION–ELEVATION
SCALE: NO SCALE

50% SUBMISSION
NOT FOR CONSTRUCTION

SOUTHEASTERN PENNSYLVANIA TRANSPORTATION AUTHORITY
EM&C DIVISION
1234 MARKET ST, 13TH FL,
PHILADELPHIA, PA 19107

CHIEF ENGINEER - EM&C
CHIEF ENGINEERING OFFICER - B&B
CHIEF RAIL TRANSIT OFFICER
SYSTEM SAFETY
DIRECTOR OF ENGINEERING - B&B
MANAGER - ARCH / ENGINEERING
PROJECT MANAGER

HDR Engineering, Inc.
Philadelphia, PA

ARORA ENGINEERS
61 WILMINGTON WEST CHESTER PIKE
CHADDS FORD, PA 19317
PHONE 610.459.2600
FAX 610.459.2900

REV	DATE	DESCRIPTION	BY	CK'D	APP'D

DATE PRINTED: 10/21/2025

PARK
SUBWAY/ELEVATED TRAINS
TRACTION POWER SUBSTATION REHABILITATION
MECHANICAL
MISCELLANEOUS DETAILS

SCALE: AS SHOWN	SCALE FACTOR: 1:1
DATE: 08/22/2025	DRAWN BY: DNP
	CHECKED BY: DJM
WORK ORDER NO.: 276482	
SHEET NUMBER: **M211**	
DWG. NO.: 12 OF 12	
SHT. NO.: 191 OF 452	
ARCHIVE NO.:	
COMPUTER FILE NO.: 17AN-M211	REV. NO.: ---

STATUS: 50% SUBMISSION

C:\PWWORKING\PITT\D1731191\17AN-M211.DWG

ELECTRICAL / LIGHTING SYMBOLS:

SYMBOL	DESCRIPTION
	PANEL, 208/120V PANEL. REFER TO DRAWINGS E216 AND E217 FOR PANEL SCHEDULES.
'XX'	INDUSTRIAL LED LUMINAIRE, ENCLOSED/WET LOCATION. 'XX' REPRESENTS DESIGNATION. REFER TO DRAWING E215 FOR LUMINAIRE SCHEDULE.
'XX'	INDUSTRIAL LUMINAIRE ENCLOSED/WET LOCATION, CONNECTED TO EMERGENCY CIRCUIT. 'XX' REPRESENTS DESIGNATION. REFER TO DRAWING E215 FOR LUMINAIRE SCHEDULE.
'XX'	UP/DOWN COLUMN MOUNTED EXTERIOR LUMINAIRE. 'XX' REPRESENTS DESIGNATION. REFER TO DRAWING E215 FOR LUMINAIRE SCHEDULE.
'XX' 'XX' 'XX'	WALL MOUNTED LUMINAIRE, TYPE AS NOTED. 'XX' REPRESENTS DESIGNATION. REFER TO DRAWING E215 FOR LUMINAIRE SCHEDULE.
'XX'	CEILING MOUNTED LUMINAIRE. 'XX' REPRESENTS DESIGNATION. REFER TO DRAWING E215 FOR LUMINAIRE SCHEDULE.
'XX'	DOCK LIGHT, 'XX' REPRESENTS DESIGNATION. REFER TO DRAWING E215 FOR LUMINAIRE SCHEDULE.
'XX'	EXIT SIGN, SINGLE FACE, WALL MOUNTED. ARROW INDICATES CHEVRON DIRECTION. 'XX' REPRESENTS DESIGNATION. REFER TO DRAWING E215 FOR LUMINAIRE SCHEDULE.
'XX'	EXIT SIGN, SINGLE FACE, CEILING MOUNTED. ARROW INDICATES CHEVRON DIRECTION. 'XX' REPRESENTS DESIGNATION. REFER TO DRAWING E215 FOR LUMINAIRE SCHEDULE.
S_a	20A, 120/277V AC, SINGLE POLE TOGGLE SWITCH. a DENOTES SWITCH ZONE.
S_3	20A, 120/277V AC, THREE–WAY SWITCH.
S_M	MANUAL MOTOR STARTER (MATCH VOLTAGE, PHASE AND AMPACITY TO EQUIPMENT SERVED).
	DUPLEX RECEPTACLE, NEMA 5–20R, 20A, 125V.
GFI	DUPLEX RECEPTACLE, NEMA 5–20R, 20A, 125V WITH (GFCI) GROUND FAULT CURRENT INTERRUPTER PROTECTION.
WP	DUPLEX RECEPTACLE, NEMA 5–20R, 20A, 125V WITH (GFCI) GROUND FAULT CURRENT INTERRUPTER PROTECTION IN A WEATHER–PROOF ENCLOSURE.
	QUADRUPLEX RECEPTACLE, TWO (2) NEMA 5–20R, 20A, 125V.
	SPECIAL RECEPTACLE.
M	MOTOR.
	NON–FUSIBLE DISCONNECT SWITCH, 30A/3P, 600V UNLESS OTHERWISE NOTED.
WP	FUSIBLE DISCONNECT SWITCH, SIZE AS NOTED. WP REPRESENTS WEATHER–PROOF NEMA 3R ENCLOSURE.
3 PP	BRANCH CIRCUIT HOMERUN INDICATES PANEL AND CIRCUIT BREAKER NUMBER.
J J J	JUNCTION BOX.
T	TRANSFORMER, TYPE AS NOTED.
S	SUMP PUMP.
M	PECO UTILITY METER.
	PECO UTILITY POLE.
	30A CUTOUT FUSE.
H	HYDROGEN DETECTOR

DETAIL CALLOUT SYMBOLS:

X / X	EQUIPMENT CALLOUT REFER TO MECHANICAL, FIRE PROTECTION AND PLUMBING FOR ADDITIONAL INFORMATION.
3 / E101	DETAIL # / DRAWING #
3 / E101	SECTION # / DRAWING #

LINETYPE CONVENTIONS:

	ELECTRICAL EQUIPMENT DESIGNATED BY SOLID HEAVY LINE WEIGHT INDICATES NEW WORK TO BE FURNISHED AND INSTALLED.
	ELECTRICAL EQUIPMENT DESIGNATED BY SOLID LIGHT LINE WEIGHT INDICATES EXISTING EQUIPMENT TO REMAIN, UNLESS OTHERWISE INDICATED.
	ELECTRICAL EQUIPMENT DESIGNATED BY DASHED HEAVY LINE WEIGHT REPRESENTS EXISTING EQUIPMENT TO BE REMOVED AND DISPOSED, UNLESS INDICATED TO BE REMOUNTED, RELOCATED OR TURNED OVER TO SEPTA.

SINGLE LINE SYMBOLS:

SYMBOL	DESCRIPTION
	CIRCUIT BREAKER, RATING AS INDICATED
	DISCONNECT SWITCH, RATING AS INDICATED
	FUSED DISCONNECT SWITCH, RATING AS INDICATED
	FUSE, RATING AS INDICATED
	DRAWOUT CIRCUIT BREAKER, RATING AS INDICATED
	TRANSFORMER, RATING AS INDICATED
	SHIELDED ISOLATION TRANSFORMER, RATING AS INDICATED
15KV–120V / 2	POTENTIAL TRANSFORMER UPPER NUMBER: RATIO LOWER NUMBER: QUANTITY OF XFMR
■	EXOTHERMIC WELD
	GROUND
	BATTERIES
	GENERATOR, RATINGS AS INDICATED
	AUTOMATIC TRANSFER SWITCH, RATINGS AS INDICATED
	DROPPING RESISTORS, RATINGS AS INDICATED
M	NON–UTILITY CURRENT TRANSFORMER AND METER

STANDARD MOUNTING HEIGHTS:

12" BELOW FINISH CEILING	BATTERY LIGHTING UNITS AND REMOTE WALL MOUNTED LIGHT HEADS (OR 1'–0" BELOW FINISHED CEILING TO TOP OF UNIT).
9'–0"	PENDANT–HUNG INDUSTRIAL AND STRIP LIGHTING FIXTURES UNLESS OTHERWISE NOTED.
6'–8"	TOP OF BACK–MOUNTED WALL EXIT FIXTURES (NOT MOUNTED ABOVE DOORS).
6'–0"	TOP OF HIGHEST ELECTRICAL SAFETY DISCONNECT SWITCHES, MAGNETIC STARTERS, CONTACTORS.
46"	LIGHT SWITCHES
24"–18"	ELECTRICAL RECEPTACLES, 24" WITHIN MECHANICAL OR ELECTRICAL ROOMS AND WORKSHOPS.
00"	FINISHED FLOOR

NOTES:

1. MOUNTING HEIGHTS TO CENTER OF OUTLETS UNLESS OTHERWISE NOTED.
2. THE ABOVE MOUNTING HEIGHTS SHALL BE ADHERED TO UNLESS NOTED OTHERWISE ON THE DRAWINGS OR SPECIFICATION.

ELECTRICAL ABBREVIATIONS:

(E)	EXISTING WORK – EQUIPMENT TO REMAIN
(ER)	EXISTING WORK – EQUIPMENT TO BE REMOVED AND RELOCATED/REPLACED
(N)	NEW WORK – EQUIPMENT
(R)	EXISTING EQUIPMENT TO BE DISCONNECTED AND REMOVED
(RE)	RELOCATED/REPLACED EXISTING WORK
A, AMPS	AMPERES
AC	ALTERNATING CURRENT, AIR CONDITIONER
AF	AMPERES, FRAME
AFF	ABOVE FINISHED FLOOR
AFG	ABOVE FINISHED GRADE
AS	AMPERES, SWITCH
AT	AMPERES, TRIP
ATS	AUTOMATIC TRANSFER SWITCH
AVG	AVERAGE
AWG	AMERICAN WIRE GAUGE
BATT	BATTERY
BCW	BARE COPPER WIRE
BKR	BREAKER
C	CLOSED
C OR CND	CONDUIT
CA	COMPRESSOR
CALC	CALCULATION
CLG	CEILING, EQUIPMENT MOUNTED EITHER ON OR IN CEILING AREA
CT	CURRENT TRANSFORMER
CTRL	CONTROL
CU	CONDENSER
DC	DIRECT CURRENT
ECB	ENCLOSED CIRCUIT BREAKER
EF	EXHAUST FAN
EMH	ELECTRICAL MANHOLE
EMT	ELECTRICAL METALLIC TUBING
EPO	EMERGENCY POWER OFF
ERV	ENERGY RECOVERY VENTILATION UNIT
ETC	ET CETERA
EWH	ELECTRIC WATER HEATER
FA	FIRE ALARM
FAAP	FIRE ALARM ANNUNCIATOR PANEL
FACP	FIRE ALARM CONTROL PANEL
FMC	FLEXIBLE METAL CONDUIT
FOIC	FIBER OPTIC INTERFACE CABINET
FP	FIRE PROTECTION
G OR GND	GROUND
GFCI OR GFI	GROUND FAULT CIRCUIT INTERRUPTER
GRS	GALVANIZED RIGID STEEL
HOA	HAND/OFF/AUTO
HZ	HERTZ
INC	INCANDESCENT LIGHT
IRH	INFRARED RADIANT HEATER
IT	INFORMATION TECHNOLOGY
IDS	INTRUSION DETECTION SYSTEM
KA	KILO AMPERES
KAIC	KILO AMPERES, INTERRUPTING CAPACITY
KCMIL	KILO CIRCULAR MILS
KV	KILOVOLTS
KVA	KILOVOLT AMPERES
KW	KILOWATTS
L	LINE
LCD	LIQUID CRYSTAL DISPLAY
LED	LIGHT EMITTING DIODE
LFMC	LIQUIDTIGHT FLEXIBLE METAL CONDUIT
LS	LIGHTING STANDARD
LSIG	LONG–TIME, SHORT–TIME, INSTANTANEOUS AND GROUND FAULT
MAX	MAXIMUM
MCB	MAIN CIRCUIT BREAKER
MH	METAL HALIDE LIGHT
MIN	MINIMUM
MLO	MAIN LUGS ONLY
MOCP	MAXIMUM OVERCURRENT PROTECTION
MOPD	MAXIMUM OVERCURRENT PROTECTIVE DEVICE
MTR	MOTOR
#	NUMBER
N	NEUTRAL
NEC	NATIONAL ELECTRIC CODE
NEMA	NATIONAL ELECTRICAL MANUFACTURERS ASSOCIATION
NIC	NOT IN CONTRACT
NVS	NETWORK VIDEO STORAGE
O	OPEN
OVHD	OVERHEAD
P	POLE
PH, ø	PHASE
PT	POTENTIAL TRANSFORMER
PWR	POWER
QTY	QUANTITY
RMC	RIGID METAL CONDUIT
RMS	ROOT–MEAN–SQUARE
RNC	RIGID NON–METALLIC CONDUIT
RTU	REMOTE TERMINAL UNIT
S	SECURITY
SC	SECURITY CAMERA
SCADA	SUPERVISORY CONTROL AND DATA ACQUISITION
SCCR	SHORT CIRCUIT CURRENT RATING
SLC	SIGNALING LINE CIRCUIT
SMR	SURFACE METAL RACEWAY
SP	SUMP PUMP
STP	SHIELDED TWISTED PAIR
SWGR	SWITCHGEAR
SYM.	SYMMETRICAL
TBD	TO BE DETERMINED
TCOM	TELECOMMUNICATIONS
TDDE	TIME–DELAY DUAL ELEMENT (FUSES)
TVSS	TRANSIENT VOLTAGE SURGE SUPPRESSION
TYP	TYPICAL
UE	UNDERGROUND ELECTRIC
UH	UNIT HEATER
UON	UNLESS OTHERWISE NOTED
UPS	UNINTERRUPTIBLE POWER SOURCE
V	VOLTS
VA	VOLT AMPS
VIF	VERIFY IN FIELD
VP	VACUUM PUMP
VT	VOLTAGE TRANSFORMER
W	WIRE
WC	WATER COOLER CONNECTION
WESS	WAYSIDE ENERGY STORAGE SYSTEM
WP	WEATHERPROOF
XFMR	TRANSFORMER

50% SUBMISSION
NOT FOR CONSTRUCTION

SOUTHEASTERN PENNSYLVANIA TRANSPORTATION AUTHORITY
EM&C DIVISION
1234 MARKET ST, 13TH FL.
PHILADELPHIA, PA 19107

CHIEF ENGINEER - EM&C
CHIEF ENGINEERING OFFICER - B&B
CHIEF RAIL TRANSIT OFFICER
SYSTEM SAFETY
DIRECTOR OF ENGINEERING - B&B
MANAGER - ARCH / ENGINEERING
PROJECT MANAGER

HDR Engineering, Inc.
Philadelphia, PA

ARORA ENGINEERS
61 WILMINGTON-WEST CHESTER PIKE
CHADDS FORD, PA 19317
PHONE 610.485.2600
FAX 610.485.7900

REV	DATE	DESCRIPTION	BY	CK'D	APD

DATE PRINTED: 10/21/2025

PARK
SUBWAY/ELEVATED TRAINS
TRACTION POWER SUBSTATION REHABILITATION
ELECTRICAL
NOTES SYMBOLS & ABBREVIATIONS

SCALE: AS SHOWN	SCALE FACTOR: 1:1
DATE: 08/22/2025	DRAWN BY: MM / CHECKED BY: JB
WORK ORDER NO.: 276482	
SHEET NUMBER: **E200**	
DWG. NO.: 1 OF 18	
SHT. NO.: 192 OF 453	
ARCHIVE NO.:	
COMPUTER FILE NO.: 17AN-E200	REV. NO.: ----

STATUS: 50% SUBMISSION

C:\PWWORKING\PITTIDI\7311861\7AN-E200.DWG

DEMOLITION SCOPE OF WORK:

A. REFER TO DEMOLITION DRAWINGS FOR LIMITS OF DEMOLITION. COORDINATE DISPOSAL OF EQUIPMENT WITH SEPTA. STAGING OF ITEMS FOR DEMOLITION SHALL BE COORDINATED WITH THE SEPTA PROJECT MANAGER TO ENSURE CONTINUITY AND ENSURING SEAMLESS OPERATIONS OF EQUIPMENT.

B. DEMOLITION OF EXISTING TRANSFORMERS AND ASSOCIATED CONDUIT AND CIRCUITRY.

C. DEMOLITION OF EXISTING PANELS AND ASSOCIATED CONDUIT AND CIRCUITRY.

D. DEMOLITION OF EXISTING DISCONNECT SWITCHES AND ASSOCIATED CONDUIT AND CIRCUITRY.

E. DEMOLITION OF EXISTING TRANSFER SWITCH AND ASSOCIATED CONDUIT AND CIRCUITRY.

F. DEMOLITION OF EXISTING BATTERY CHARGERS AND ASSOCIATED CONDUIT AND CIRCUITRY.

G. DEMOLITION OF EXISTING BATTERIES AND ASSOCIATED CONDUIT AND CIRCUITRY.

H. DEMOLITION OF EXISTING BATTERY RESISTOR AND ASSOCIATED CONDUIT AND CIRCUITRY.

I. DEMOLITION OF EXISTING BATTERY SELECTOR PANEL AND ASSOCIATED CONDUIT AND CIRCUITRY.

J. DEMOLITION OF EXISTING CONDUIT AND CIRCUITRY TO MECHANICAL ITEMS.

K. DEMOLITION OF EXISTING RECEPTACLES AND ASSOCIATED CONDUIT AND CIRCUITRY.

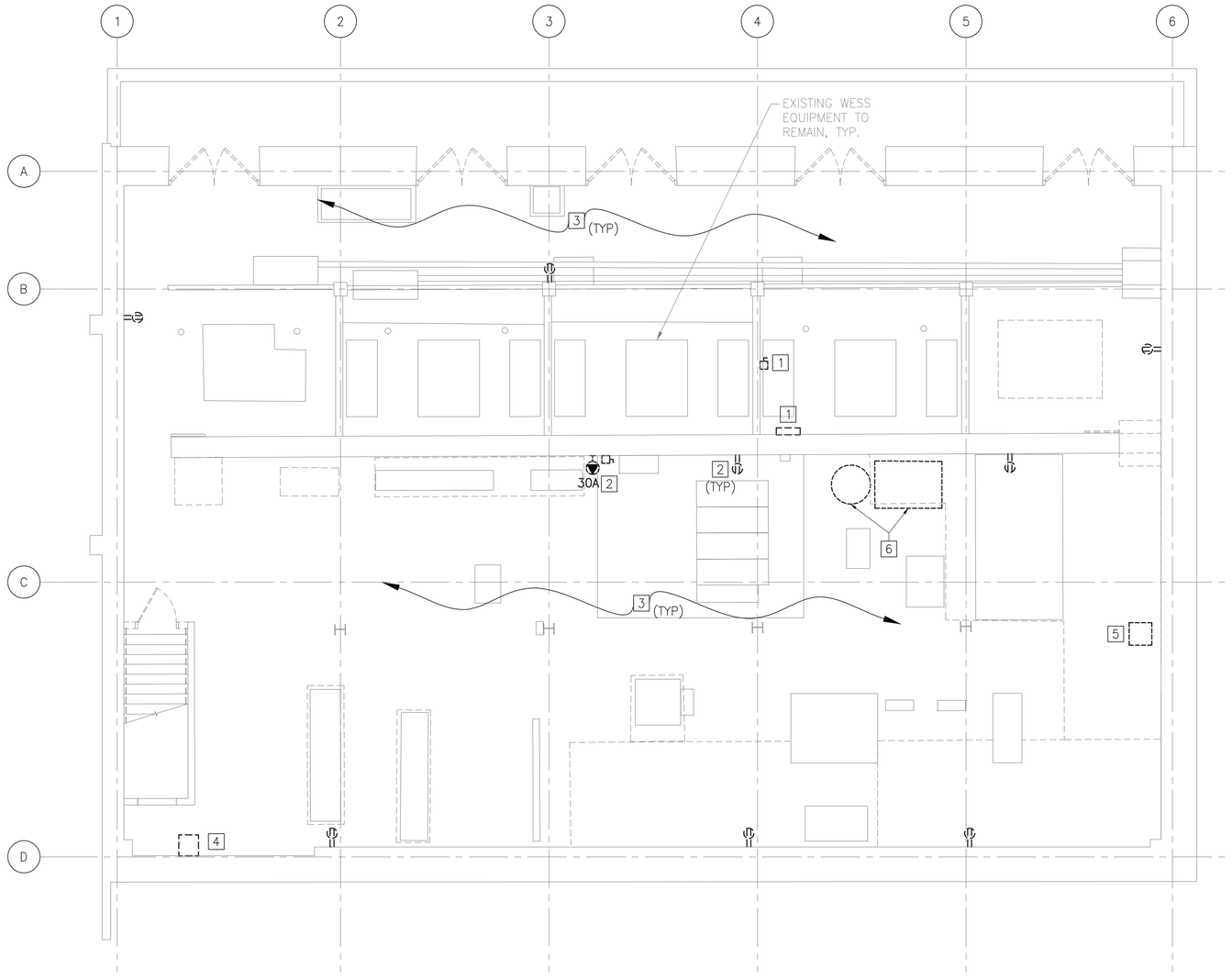

1 E201 BASEMENT REMOVAL FLOOR PLAN
SCALE: 3/16" = 1'-0"

GENERAL NOTES:

1. FOR ELECTRICAL SYMBOLS AND ABBREVIATIONS REFER TO DRAWING E200.
2. DEMOLITION PLAN IS DIAGRAMMATIC. FIELD VERIFY EXACT LOCATIONS AND DIMENSIONS.
3. DISCUSS AND COORDINATE ALL UTILITY WORK WITH PECO PRIOR TO COMMENCING ANY UTILITY WORK.
4. OBTAIN AND ADHERE TO PECO'S INSTALLATION GUIDELINES.
5. THE CONTRACTOR SHALL NOT INTERRUPT EXISTING POWER DISTRIBUTION SYSTEMS.
6. CONTACT THE SEPTA PROJECT MANAGER IF ISSUES ARISE IN THE FIELD THAT MAY DISRUPT EXISTING SYSTEMS.
7. REMOVE ALL DEVICES, WIRING, JUNCTION BOXES AND ASSOCIATED APPURTENANCES WITHIN SCOPE OF DEMOLITION.
8. LEGALLY DISPOSE OF DEVICES INDICATED TO BE REMOVED. OFFER EQUIPMENT TO SEPTA AND DISPOSE OF THE EQUIPMENT THAT SEPTA DOES NOT WISH TO RETAIN.
9. COORDINATE WORK CONCERNING EXISTING EQUIPMENT AND SERVICES IN THE BUILDING. COORDINATE REQUIRED POWER INTERRUPTIONS WITH SEPTA PER DIVISION 1 SPECIFICATIONS.
10. EQUIPMENT, PANELS OR DISCONNECT SWITCHES INDICATED TO BE REMOVED SHALL INCLUDE THE REMOVAL OF ALL CONDUCTORS, INCLUDING CONDUIT AND WIRING, AND BE REMOVED BACK TO SOURCE.

KEYED NOTES:

1. DE-ENERGIZE AND REMOVE "BATTERY DIST. PANEL #1" AND 200A BATTERY DISCONNECT SWITCH.
2. REMOVE ALL RECEPTACLES AND ASSOCIATED WIRE AND CONDUIT BACK TO SOURCE.
3. DE-ENERGIZE AND REMOVE ALL DEVICES, EQUIPMENT, WIRE AND CONDUIT IN THIS AREA.
4. REMOVE DOOR CONTACT AND WIRING BACK TO SOURCE.
5. DE-ENERGIZE AND REMOVE SUMP PUMP CIRCUIT.
6. DE-ENERGIZE AND REMOVE AIR COMPRESSOR CIRCUIT.

6 4 2 0 6
SCALE: 3/16"=1'0"

50% SUBMISSION
NOT FOR CONSTRUCTION

SOUTHEASTERN PENNSYLVANIA TRANSPORTATION AUTHORITY
EM&C DIVISION
1234 MARKET ST, 13TH FL,
PHILADELPHIA, PA 19107

CHIEF ENGINEER - EM&C
CHIEF ENGINEERING OFFICER - B&B
CHIEF RAIL TRANSIT OFFICER
SYSTEM SAFETY
DIRECTOR OF ENGINEERING - B&B
MANAGER - ARCH / ENGINEERING
PROJECT MANAGER

HDR Engineering, Inc.
Philadelphia, PA

ARORA ENGINEERS
61 WILMINGTON WEST CHESTER PIKE
CHADDS FORD, PA 19317
PHONE 610.485.3600
FAX 610.485.7900

REV	DATE	DESCRIPTION	BY	CKD	APD

DATE PRINTED: 10/21/2025

PARK
SUBWAY/ELEVATED TRAINS
TRACTION POWER SUBSTATION REHABILITATION
ELECTRICAL
DEMOLITION POWER BASEMENT FLOOR PLAN

SCALE: AS SHOWN
SCALE FACTOR: 1:1
DATE: 08/22/2025
DRAWN BY: MM
CHECKED BY: JB
WORK ORDER NO.: 276482
SHEET NUMBER: **E201**
DWG. NO.: 2 OF 18
SHT. NO.: 193 OF 452
ARCHIVE NO.:
COMPUTER FILE NO.: 17AN-E201
REV. NO.: ----

STATUS: 50% SUBMISSION

C:\PW\WORKING\PITTIDI1731186\17AN-E201.DWG

DEMOLITION SCOPE OF WORK:

A. REFER TO DEMOLITION DRAWINGS FOR LIMITS OF DEMOLITION. COORDINATE DISPOSAL OF EQUIPMENT WITH SEPTA. STAGING OF ITEMS FOR DEMOLITION SHALL BE COORDINATED WITH THE SEPTA PROJECT MANAGER TO ENSURE CONTINUITY AND ENSURING SEAMLESS OPERATIONS OF EQUIPMENT.

B. DEMOLITION OF EXISTING TRANSFORMERS AND ASSOCIATED CONDUIT AND CIRCUITRY.

C. DEMOLITION OF EXISTING PANELS AND ASSOCIATED CONDUIT AND CIRCUITRY.

D. DEMOLITION OF EXISTING DISCONNECT SWITCHES AND ASSOCIATED CONDUIT AND CIRCUITRY.

E. DEMOLITION OF EXISTING TRANSFER SWITCH AND ASSOCIATED CONDUIT AND CIRCUITRY.

F. DEMOLITION OF EXISTING BATTERY CHARGERS AND ASSOCIATED CONDUIT AND CIRCUITRY.

G. DEMOLITION OF EXISTING BATTERIES AND ASSOCIATED CONDUIT AND CIRCUITRY.

H. DEMOLITION OF EXISTING DROPPING RESISTORS AND ASSOCIATED CONDUIT AND CIRCUITRY.

I. DEMOLITION OF EXISTING BATTERY TRANSFER PANEL AND ASSOCIATED CONDUIT AND CIRCUITRY.

J. DEMOLITION OF EXISTING CONDUIT AND CIRCUITRY TO MECHANICAL ITEMS.

K. DEMOLITION OF EXISTING RECEPTACLES AND ASSOCIATED CONDUIT AND CIRCUITRY.

GENERAL NOTES:

1. FOR ELECTRICAL SYMBOLS AND ABBREVIATIONS REFER TO DRAWING E200.
2. DEMOLITION PLAN IS DIAGRAMMATIC. FIELD VERIFY EXACT LOCATIONS AND DIMENSIONS.
3. DISCUSS AND COORDINATE ALL UTILITY WORK WITH PECO PRIOR TO COMMENCING ANY UTILITY WORK.
4. OBTAIN AND ADHERE TO PECO'S INSTALLATION GUIDELINES.
5. THE CONTRACTOR SHALL NOT INTERRUPT EXISTING POWER DISTRIBUTION SYSTEMS.
6. CONTACT THE SEPTA PROJECT MANAGER IF ISSUES ARISE IN THE FIELD THAT MAY DISRUPT EXISTING SYSTEMS.
7. REMOVE ALL DEVICES, WIRING, JUNCTION BOXES AND ASSOCIATED APPURTENANCES WITHIN SCOPE OF DEMOLITION.
8. LEGALLY DISPOSE OF DEVICES INDICATED TO BE REMOVED. OFFER EQUIPMENT TO SEPTA AND DISPOSE OF THE EQUIPMENT THAT SEPTA DOES NOT WISH TO RETAIN.
9. COORDINATE WORK CONCERNING EXISTING EQUIPMENT AND SERVICES IN THE BUILDING. COORDINATE REQUIRED POWER INTERRUPTIONS WITH SEPTA PER DIVISION 1 SPECIFICATIONS.
10. EQUIPMENT, PANELS OR DISCONNECT SWITCHES INDICATED TO BE REMOVED SHALL INCLUDE THE REMOVAL OF ALL CONDUCTORS, INCLUDING CONDUIT AND WIRING, AND BE REMOVED BACK TO SOURCE.
11. THE DEMOLITION OF THE EXISTING FIRE ALARM SYSTEM WILL NOT COMMENCE UNTIL THE NEW FIRE ALARM SYSTEM IS FULLY INSTALLED AND ACCEPTED BY THE AUTHORITY HAVING JURISDICTION AND SEPTA.

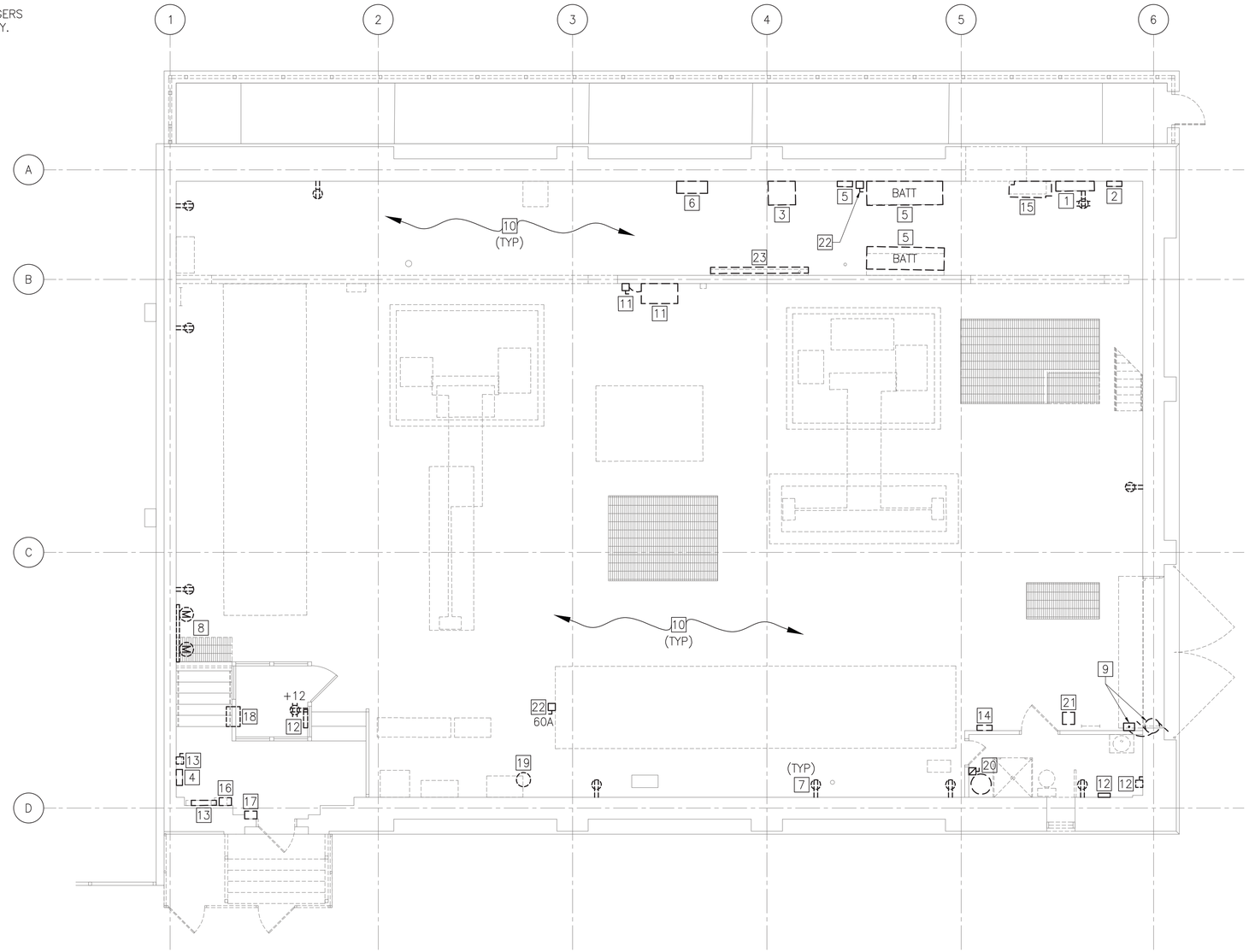

1 E202 MAIN FLOOR REMOVAL PLAN
SCALE: 3/16" = 1'-0"

KEYED NOTES:

1. DE-ENERGIZE AND REMOVE "ATS1 SUB PANEL 1", 208/120V 3ø, 4W 400A MCB.
2. DE-ENERGIZE AND REMOVE "ATS1 SUB PANEL 2" 208/120V 100A MCB.
3. DE-ENERGIZE AND REMOVE BATTERY CHARGER.
4. DE-ENERGIZE AND REMOVE "A/C DIST PANEL", 208/120V 3ø, 4W 100A MCB.
5. DE-ENERGIZE AND REMOVE BATTERIES AND 200A BATTERY DISCONNECT SWITCH.
6. DE-ENERGIZE AND REMOVE BATTERY TRANSFER PANEL.
7. DE-ENERGIZE AND REMOVE ALL RECEPTACLES AND ASSOCIATED WIRE AND CONDUIT BACK TO SOURCE.
8. DE-ENERGIZE AND REMOVE ELECTRICITY METERS.
9. DE-ENERGIZE AND REMOVE OVERHEAD DOOR MOTOR AND CONTROL.
10. DE-ENERGIZE AND REMOVE ALL DEVICES, EQUIPMENT, WIRE AND CONDUIT IN THIS AREA.
11. DE-ENERGIZE AND REMOVE COMPRESSOR CIRCUIT.
12. DE-ENERGIZE AND REMOVE HEATER CIRCUIT.
13. DE-ENERGIZE AND REMOVE POWER TO FIRE ALARM CONTROL PANEL. REMOVE FIRE ALARM DISCONNECT SWITCH.
14. DE-ENERGIZE AND REMOVE BATTERY DISTRIBUTION PANEL.
15. DE-ENERGIZE AND REMOVE 400A ATS1.
16. DE-ENERGIZE AND REMOVE DOOR INTRUSION ALARM PANEL, ASSOCIATED EQUIPMENT AND WIRING.
17. REMOVE DOOR CONTACT AND WIRING BACK TO SOURCE.
18. DE-ENERGIZE AND REMOVE WINDOW UNIT CIRCUIT.
19. DE-ENERGIZE AND REMOVE WATER COOLER CIRCUIT.
20. DE-ENERGIZE AND REMOVE WATER HEATER CIRCUIT.
21. DE-ENERGIZE AND REMOVE WATER FOUNTAIN CIRCUIT.
22. DE-ENERGIZE AND REMOVE DISCONNECT SWITCH AND CIRCUIT.
23. DE-ENERGIZE AND REMOVE DROPPING RESISTORS.

6 4 2 0 6
SCALE: 3/16"=1'0"

50% SUBMISSION
NOT FOR CONSTRUCTION

SOUTHEASTERN PENNSYLVANIA TRANSPORTATION AUTHORITY
EM&C DIVISION
1234 MARKET ST, 13TH FL.
PHILADELPHIA, PA 19107

CHIEF ENGINEER - EM&C
CHIEF ENGINEERING OFFICER - B&B
CHIEF RAIL TRANSIT OFFICER
SYSTEM SAFETY
DIRECTOR OF ENGINEERING - B&B
MANAGER - ARCH / ENGINEERING
PROJECT MANAGER

HDR Engineering, Inc.
Philadelphia, PA

ARORA ENGINEERS
81 WILMINGTON WEST CHESTER PIKE
CHADDS FORD, PA 19317
PHONE 610.485.3600
FAX 610.485.7900

REV	DATE	DESCRIPTION	BY	CKD	APD

DATE PRINTED: 10/21/2025

PARK
SUBWAY/ELEVATED TRAINS
TRACTION POWER SUBSTATION REHABILITATION
ELECTRICAL
DEMOLITION POWER FIRST FLOOR PLAN

SCALE: AS SHOWN
SCALE FACTOR: 1:1
DATE: 08/22/2025
DRAWN BY: MM
CHECKED BY: JB
WORK ORDER NO.: 276482
SHEET NUMBER: **E202**
DWG. NO.: 3 OF 18
SHT. NO.: 194 OF 452
ARCHIVE NO.:
COMPUTER FILE NO.: 17AN-E202
REV. NO.: ---

STATUS: 50% SUBMISSION

C:\PW\WORKING\PITTD173118b17AN-E202.DWG

DEMOLITION SCOPE OF WORK:

A. REFER TO DEMOLITION DRAWINGS FOR LIMITS OF DEMOLITION. COORDINATE DISPOSAL OF EQUIPMENT WITH SEPTA. STAGING OF ITEMS FOR DEMOLITION SHALL BE COORDINATED WITH THE SEPTA PROJECT MANAGER TO ENSURE CONTINUITY AND ENSURING SEAMLESS OPERATIONS OF EQUIPMENT.

B. DEMOLITION OF EXISTING TRANSFORMERS AND ASSOCIATED CONDUIT AND CIRCUITRY.

C. DEMOLITION OF EXISTING PANELS AND ASSOCIATED CONDUIT AND CIRCUITRY.

D. DEMOLITION OF EXISTING DISCONNECT SWITCHES AND ASSOCIATED CONDUIT AND CIRCUITRY.

E. DEMOLITION OF EXISTING TRANSFER SWITCH AND ASSOCIATED CONDUIT AND CIRCUITRY.

F. DEMOLITION OF EXISTING BATTERY CHARGERS AND ASSOCIATED CONDUIT AND CIRCUITRY.

G. DEMOLITION OF EXISTING BATTERIES AND ASSOCIATED CONDUIT AND CIRCUITRY.

H. DEMOLITION OF EXISTING BATTERY RESISTOR AND ASSOCIATED CONDUIT AND CIRCUITRY.

I. DEMOLITION OF EXISTING BATTERY SELECTOR PANEL AND ASSOCIATED CONDUIT AND CIRCUITRY.

J. DEMOLITION OF EXISTING CONDUIT AND CIRCUITRY TO MECHANICAL ITEMS.

K. DEMOLITION OF EXISTING RECEPTACLES AND ASSOCIATED CONDUIT AND CIRCUITRY.

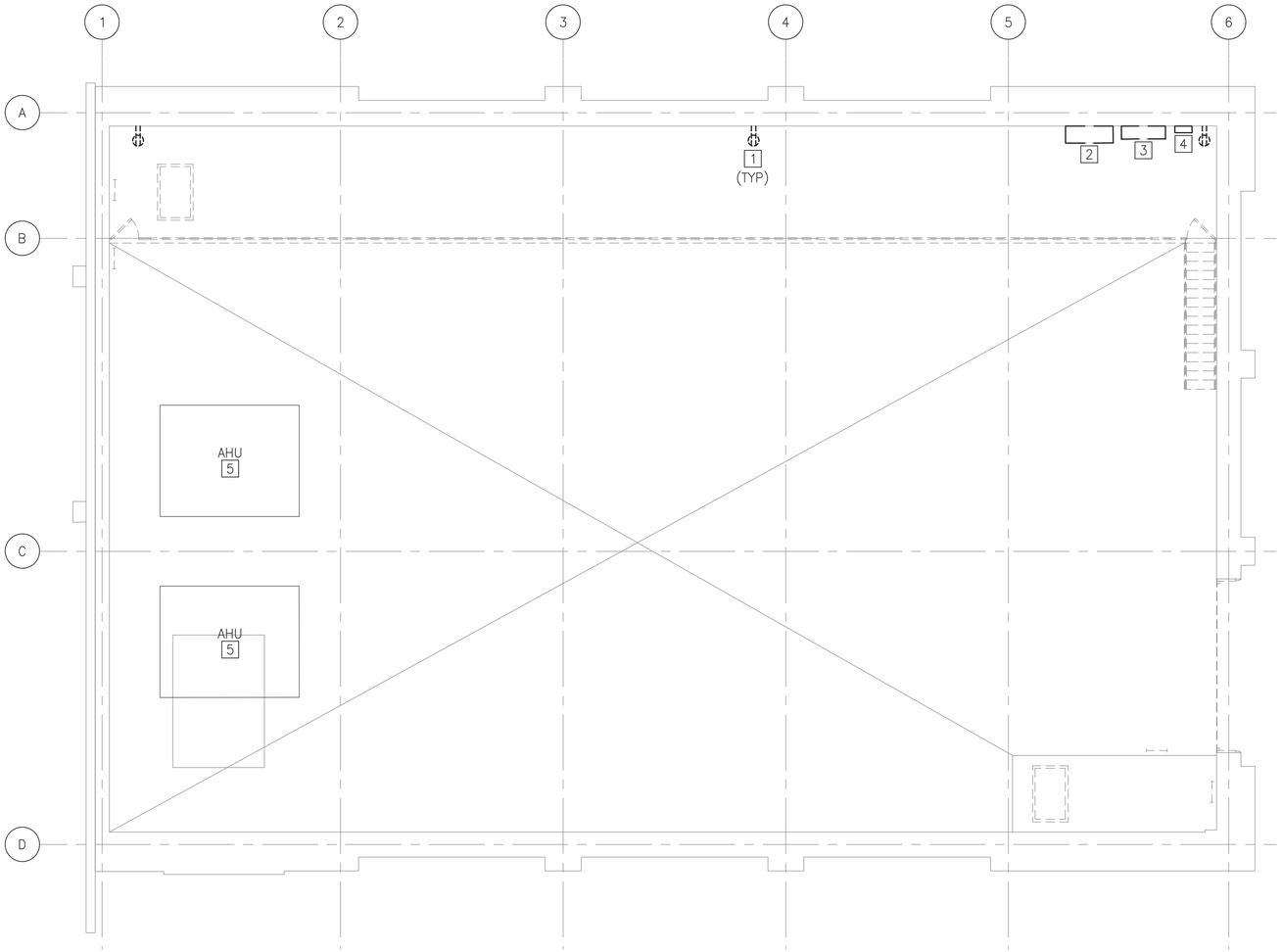

1 / E203 MEZZANINE REMOVAL FLOOR PLAN
SCALE: 3/16" = 1'-0"

GENERAL NOTES:

1. FOR ELECTRICAL SYMBOLS AND ABBREVIATIONS REFER TO DRAWING E200.
2. DEMOLITION PLAN IS DIAGRAMMATIC. FIELD VERIFY EXACT LOCATIONS AND DIMENSIONS.
3. DISCUSS AND COORDINATE ALL UTILITY WORK WITH PECO PRIOR TO COMMENCING ANY UTILITY WORK.
4. OBTAIN AND ADHERE TO PECO'S INSTALLATION GUIDELINES.
5. THE CONTRACTOR SHALL NOT INTERRUPT EXISTING POWER DISTRIBUTION SYSTEMS.
6. CONTACT THE SEPTA PROJECT MANAGER IF ISSUES ARISE IN THE FIELD THAT MAY DISRUPT EXISTING SYSTEMS.
7. REMOVE ALL DEVICES, WIRING, JUNCTION BOXES AND ASSOCIATED APPURTENANCES WITHIN SCOPE OF DEMOLITION.
8. LEGALLY DISPOSE OF DEVICES INDICATED TO BE REMOVED. OFFER EQUIPMENT TO SEPTA AND DISPOSE OF THE EQUIPMENT THAT SEPTA DOES NOT WISH TO RETAIN.
9. COORDINATE WORK CONCERNING EXISTING EQUIPMENT AND SERVICES IN THE BUILDING. COORDINATE REQUIRED POWER INTERRUPTIONS WITH SEPTA PER DIVISION 1 SPECIFICATIONS.
10. EQUIPMENT, PANELS OR DISCONNECT SWITCHES INDICATED TO BE REMOVED SHALL INCLUDE THE REMOVAL OF ALL CONDUCTORS, INCLUDING CONDUIT AND WIRING, AND BE REMOVED BACK TO SOURCE.

KEYED NOTES:

1. DE-ENERGIZE AND REMOVE ALL RECEPTACLES AND ASSOCIATED WIRE AND CONDUIT BACK TO SOURCE.
2. DE-ENERGIZE AND REMOVE 400A ATS2.
3. DE-ENERGIZE AND REMOVE "ATS2 SUB PANEL 1", 208/120V 3ø, 4W 400A MCB.
4. DE-ENERGIZE AND REMOVE "ATS2 SUB PANEL 2", 208/120V 100A MCB.
5. DE-ENERGIZE AND REMOVE AIR HANDLING UNIT CIRCUIT.

6 4 2 0 6
SCALE: 3/16"=1'0"

50% SUBMISSION
NOT FOR CONSTRUCTION

SOUTHEASTERN PENNSYLVANIA TRANSPORTATION AUTHORITY
EM&C DIVISION
1234 MARKET ST, 13TH FL,
PHILADELPHIA, PA 19107

CHIEF ENGINEER - EM&C
CHIEF ENGINEERING OFFICER - B&B
CHIEF RAIL TRANSIT OFFICER
SYSTEM SAFETY
DIRECTOR OF ENGINEERING - B&B
MANAGER - ARCH / ENGINEERING
PROJECT MANAGER

HDR
HDR Engineering, Inc.
Philadelphia, PA

ARORA
ARORA ENGINEERS
65 WILMINGTON-WEST CHESTER PIKE
CHADDS FORD, PA 19317
PHONE 610.459.2600
FAX 610.459.2900

REV	DATE	DESCRIPTION	BY	CKD	APD

DATE PRINTED: 10/21/2025

PARK
SUBWAY/ELEVATED TRAINS
TRACTION POWER SUBSTATION REHABILITATION
ELECTRICAL
DEMOLITION POWER MEZZANINE FLOOR PLAN

SCALE: AS SHOWN
SCALE FACTOR: 1:1
DATE: 08/22/2025
DRAWN BY: MM
CHECKED BY: JB
WORK ORDER NO.: 276482
SHEET NUMBER: **E203**
DWG. NO.: 4 OF 18
SHT. NO.: 195 OF 452
ARCHIVE NO.:
COMPUTER FILE NO.: 17AN-E203
REV. NO.: ----

STATUS: 50% SUBMISSION

C:\PW\WORKING\PITTID\17311861\17AN-E203.DWG

DEMOLITION SCOPE OF WORK:

A. REFER TO DEMOLITION DRAWINGS FOR LIMITS OF DEMOLITION. COORDINATE DISPOSAL OF EQUIPMENT WITH SEPTA. STAGING OF ITEMS FOR DEMOLITION SHALL BE COORDINATED WITH THE SEPTA PROJECT MANAGER TO ENSURE CONTINUITY AND ENSURING SEAMLESS OPERATIONS OF EQUIPMENT.

B. DEMOLITION OF EXISTING INTERIOR LIGHTING AND ASSOCIATED SWITCHING AND CONDUIT AND CIRCUITRY.

C. DEMOLITION OF EXISTING EXTERIOR LIGHTING AND ASSOCIATED SWITCHING AND CONDUIT AND CIRCUITRY.

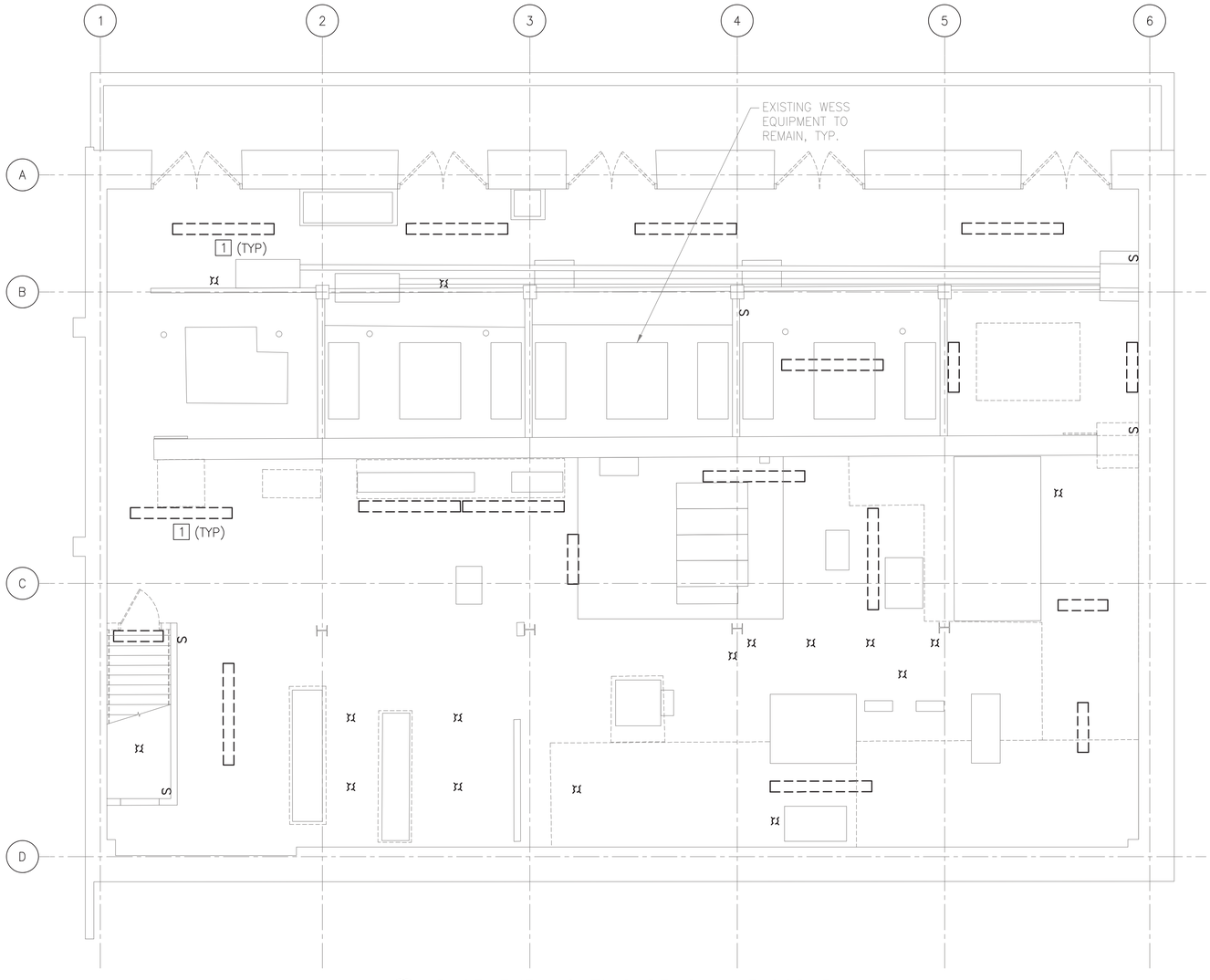

1 / E204 BASEMENT LIGHTING REMOVAL FLOOR PLAN
SCALE: 3/16" = 1'-0"

GENERAL NOTES:

1. FOR ELECTRICAL SYMBOLS AND ABBREVIATIONS REFER TO DRAWING E200.
2. DEMOLITION PLAN IS DIAGRAMMATIC. FIELD VERIFY EXACT LOCATIONS AND DIMENSIONS.
3. DISCUSS AND COORDINATE ALL UTILITY WORK WITH PECO PRIOR TO COMMENCING ANY UTILITY WORK.
4. OBTAIN AND ADHERE TO PECO'S INSTALLATION GUIDELINES.
5. THE CONTRACTOR SHALL NOT INTERRUPT EXISTING POWER DISTRIBUTION SYSTEMS.
6. CONTACT THE SEPTA PROJECT MANAGER IF ISSUES ARISE IN THE FIELD THAT MAY DISRUPT EXISTING SYSTEMS.
7. REMOVE ALL DEVICES, WIRING, JUNCTION BOXES AND ASSOCIATED APPURTENANCES WITHIN SCOPE OF DEMOLITION.
8. LEGALLY DISPOSE OF DEVICES INDICATED TO BE REMOVED. OFFER EQUIPMENT TO SEPTA AND DISPOSE OF THE EQUIPMENT THAT SEPTA DOES NOT WISH TO RETAIN.
9. COORDINATE WORK CONCERNING EXISTING EQUIPMENT AND SERVICES IN THE BUILDING. COORDINATE REQUIRED POWER INTERRUPTIONS WITH SEPTA PER DIVISION 1 SPECIFICATIONS.
10. EQUIPMENT, PANELS OR DISCONNECT SWITCHES INDICATED TO BE REMOVED SHALL INCLUDE THE REMOVAL OF ALL CONDUCTORS, INCLUDING CONDUIT AND WIRING, AND BE REMOVED BACK TO SOURCE.

KEYED NOTES:

1 DE-ENERGIZE AND REMOVE LIGHTING FIXTURES AND SWITCHES. REMOVE ALL WIRE AND CONDUIT BACK TO SOURCE.

6 4 2 0 6
SCALE: 3/16"=1'0"

50% SUBMISSION
NOT FOR CONSTRUCTION

SOUTHEASTERN PENNSYLVANIA TRANSPORTATION AUTHORITY
EM&C DIVISION
1234 MARKET ST, 13TH FL,
PHILADELPHIA, PA 19107

CHIEF ENGINEER - EM&C
CHIEF ENGINEERING OFFICER - B&B
CHIEF RAIL TRANSIT OFFICER
SYSTEM SAFETY
DIRECTOR OF ENGINEERING - B&B
MANAGER - ARCH / ENGINEERING
PROJECT MANAGER

HDR
HDR Engineering, Inc.
Philadelphia, PA

ARORA
ARORA ENGINEERS
45 WILMINGTON-WEST CHESTER PIKE
CHADDS FORD, PA 19317
PHONE 610.459.2600
FAX 610.459.7900

REV	DATE	DESCRIPTION	BY	CK'D	APP'D

DATE PRINTED: 10/21/2025

PARK
SUBWAY/ELEVATED TRAINS
TRACTION POWER SUBSTATION REHABILITATION
ELECTRICAL
DEMOLITION LIGHTING BASEMENT FLOOR PLAN

SCALE: AS SHOWN	SCALE FACTOR: 1:1
DATE: 08/22/2025	DRAWN BY: MM
	CHECKED BY: JB
WORK ORDER NO.: 276482	
SHEET NUMBER: **E204**	
DWG. NO.: 5 OF 18	
SHT. NO.: 196 OF 452	
ARCHIVE NO.:	
COMPUTER FILE NO.: 17AN-E204	REV. NO.: ---

STATUS: 50% SUBMISSION

C:\PW\WORKING\PITTD173186\17AN-E204.DWG

DEMOLITION SCOPE OF WORK:

A. REFER TO DEMOLITION DRAWINGS FOR LIMITS OF DEMOLITION. COORDINATE DISPOSAL OF EQUIPMENT WITH SEPTA. STAGING OF ITEMS FOR DEMOLITION SHALL BE COORDINATED WITH THE SEPTA PROJECT MANAGER TO ENSURE CONTINUITY AND ENSURING SEAMLESS OPERATIONS OF EQUIPMENT.

B. DEMOLITION OF EXISTING INTERIOR LIGHTING AND ASSOCIATED SWITCHING AND CONDUIT AND CIRCUITRY.

C. DEMOLITION OF EXISTING EXTERIOR LIGHTING AND ASSOCIATED SWITCHING AND CONDUIT AND CIRCUITRY.

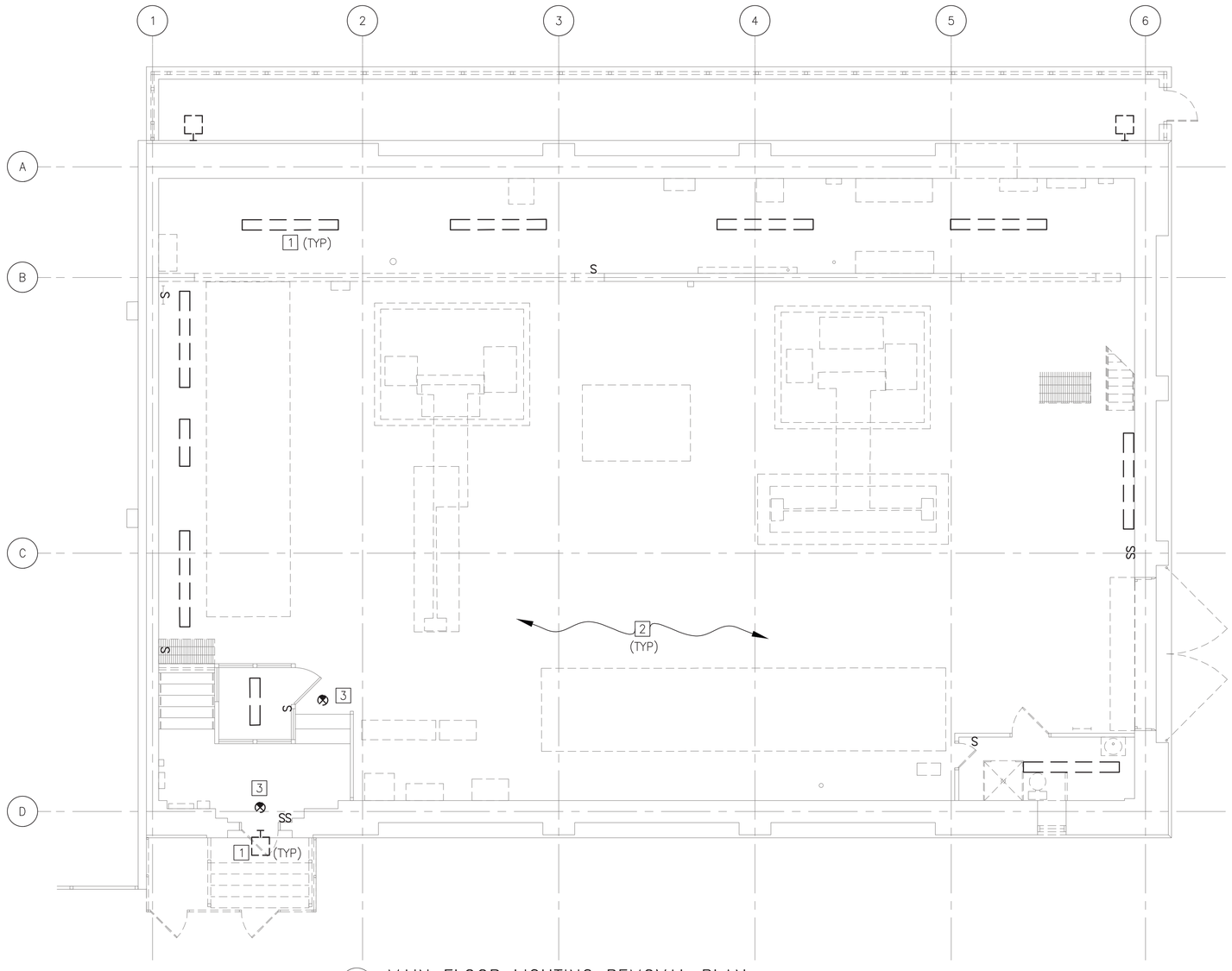

1 / E205 MAIN FLOOR LIGHTING REMOVAL PLAN
SCALE: 3/16" = 1'-0"

GENERAL NOTES:

1. FOR ELECTRICAL SYMBOLS AND ABBREVIATIONS REFER TO DRAWING E200.
2. DEMOLITION PLAN IS DIAGRAMMATIC. FIELD VERIFY EXACT LOCATIONS AND DIMENSIONS.
3. DISCUSS AND COORDINATE ALL UTILITY WORK WITH PECO PRIOR TO COMMENCING ANY UTILITY WORK.
4. OBTAIN AND ADHERE TO PECO'S INSTALLATION GUIDELINES.
5. THE CONTRACTOR SHALL NOT INTERRUPT EXISTING POWER DISTRIBUTION SYSTEMS.
6. CONTACT THE SEPTA PROJECT MANAGER IF ISSUES ARISE IN THE FIELD THAT MAY DISRUPT EXISTING SYSTEMS.
7. REMOVE ALL DEVICES, WIRING, JUNCTION BOXES AND ASSOCIATED APPURTENANCES WITHIN SCOPE OF DEMOLITION.
8. LEGALLY DISPOSE OF DEVICES INDICATED TO BE REMOVED. OFFER EQUIPMENT TO SEPTA AND DISPOSE OF THE EQUIPMENT THAT SEPTA DOES NOT WISH TO RETAIN.
9. COORDINATE WORK CONCERNING EXISTING EQUIPMENT AND SERVICES IN THE BUILDING. COORDINATE REQUIRED POWER INTERRUPTIONS WITH SEPTA PER DIVISION 1 SPECIFICATIONS.
10. EQUIPMENT, PANELS OR DISCONNECT SWITCHES INDICATED TO BE REMOVED SHALL INCLUDE THE REMOVAL OF ALL CONDUCTORS, INCLUDING CONDUIT AND WIRING, AND BE REMOVED BACK TO SOURCE.

KEYED NOTES:

1. DE-ENERGIZE AND REMOVE LIGHTING FIXTURES AND SWITCHES. REMOVE ALL WIRE AND CONDUIT BACK TO SOURCE.
2. DE-ENERGIZE AND REMOVE LIGHTS, SWITCHES, WIRE AND CONDUIT IN THIS AREA.
3. DE-ENERGIZE AND REMOVE EXIT SIGN. REMOVE ALL WIRE AND CONDUIT BACK TO SOURCE.

6 4 2 0 6
SCALE: 3/16"=1'0"

50% SUBMISSION
NOT FOR CONSTRUCTION

SOUTHEASTERN PENNSYLVANIA TRANSPORTATION AUTHORITY
EM&C DIVISION
1234 MARKET ST, 13TH FL.
PHILADELPHIA, PA 19107

CHIEF ENGINEER - EM&C
CHIEF ENGINEERING OFFICER - B&B
CHIEF RAIL TRANSIT OFFICER
SYSTEM SAFETY
DIRECTOR OF ENGINEERING - B&B
MANAGER - ARCH / ENGINEERING
PROJECT MANAGER

HDR Engineering, Inc.
Philadelphia, PA

ARORA ENGINEERS
81 WILMINGTON WEST CHESTER PIKE
CHADDS FORD, PA 19317
PHONE 610.485.3600
FAX 610.485.3900

REV	DATE	DESCRIPTION	BY	CKD	APD

DATE PRINTED: 10/21/2025

PARK
SUBWAY/ELEVATED TRAINS
TRACTION POWER SUBSTATION REHABILITATION
ELECTRICAL
DEMOLITION LIGHTING FIRST FLOOR PLAN

SCALE: AS SHOWN	SCALE FACTOR: 1:1
DATE: 08/22/2025	DRAWN BY: MM / CHECKED BY: JB
WORK ORDER NO.: 276482	
SHEET NUMBER: **E205**	
DWG. NO.: 6 OF 18	
SHT. NO.: 197 OF 452	
ARCHIVE NO.:	
COMPUTER FILE NO.: 17AN-E205	REV. NO.: ---

STATUS: 50% SUBMISSION

C:\PWWORKING\PITTIDO1731186\17AN-E205.DWG

DEMOLITION SCOPE OF WORK:

A. REFER TO DEMOLITION DRAWINGS FOR LIMITS OF DEMOLITION. COORDINATE DISPOSAL OF EQUIPMENT WITH SEPTA. STAGING OF ITEMS FOR DEMOLITION SHALL BE COORDINATED WITH THE SEPTA PROJECT MANAGER TO ENSURE CONTINUITY AND ENSURING SEAMLESS OPERATIONS OF EQUIPMENT.

B. DEMOLITION OF EXISTING INTERIOR LIGHTING AND ASSOCIATED SWITCHING AND CONDUIT AND CIRCUITRY.

C. DEMOLITION OF EXISTING EXTERIOR LIGHTING AND ASSOCIATED SWITCHING AND CONDUIT AND CIRCUITRY.

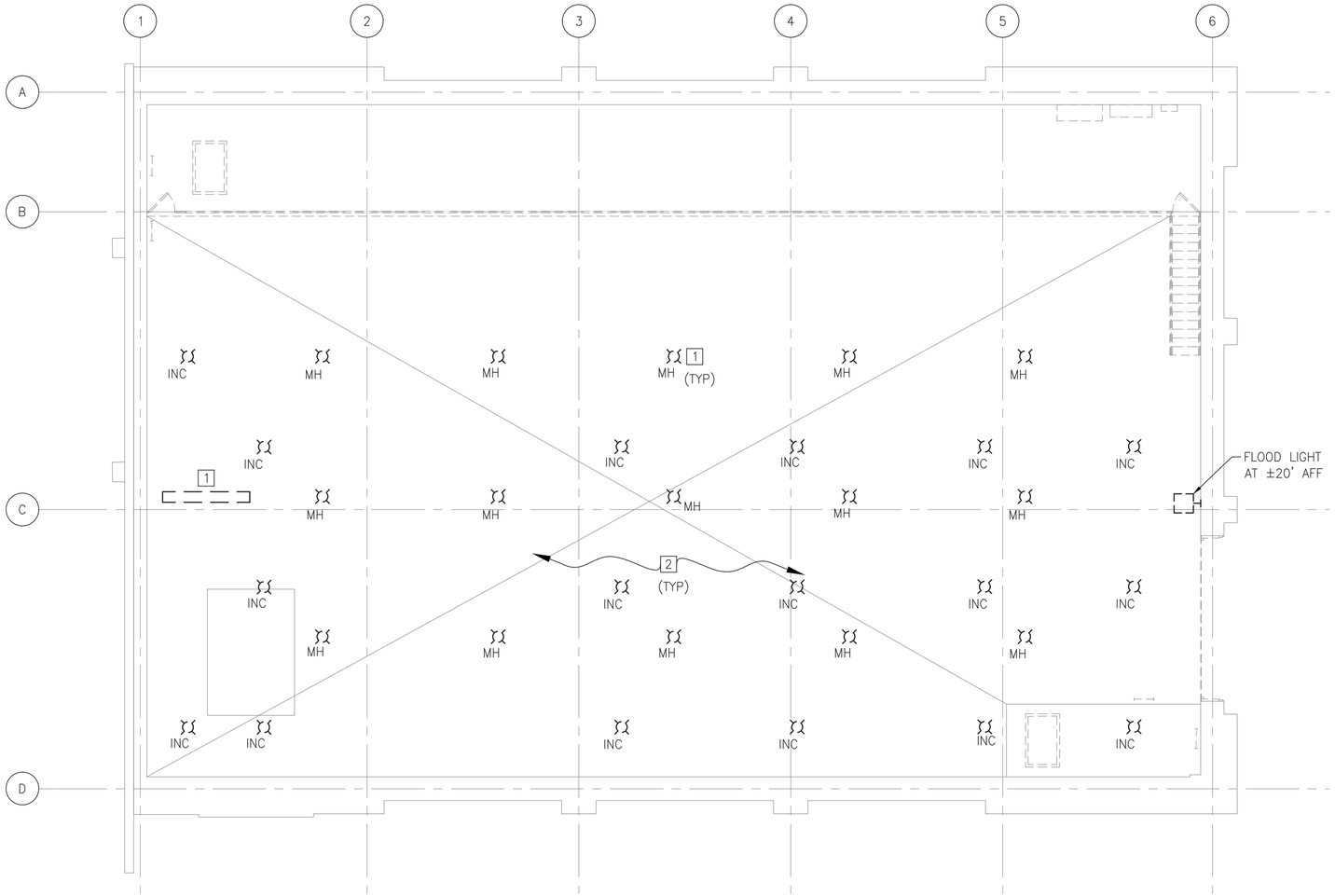

1 / E206 MEZZANINE LIGHTING REMOVAL PLAN
SCALE: 3/16" = 1'-0"

GENERAL NOTES:

1. FOR ELECTRICAL SYMBOLS AND ABBREVIATIONS REFER TO DRAWING E200.
2. DEMOLITION PLAN IS DIAGRAMMATIC. FIELD VERIFY EXACT LOCATIONS AND DIMENSIONS.
3. DISCUSS AND COORDINATE ALL UTILITY WORK WITH PECO PRIOR TO COMMENCING ANY UTILITY WORK.
4. OBTAIN AND ADHERE TO PECO'S INSTALLATION GUIDELINES.
5. THE CONTRACTOR SHALL NOT INTERRUPT EXISTING POWER DISTRIBUTION SYSTEMS.
6. CONTACT THE SEPTA PROJECT MANAGER IF ISSUES ARISE IN THE FIELD THAT MAY DISRUPT EXISTING SYSTEMS.
7. REMOVE ALL DEVICES, WIRING, JUNCTION BOXES AND ASSOCIATED APPURTENANCES WITHIN SCOPE OF DEMOLITION.
8. LEGALLY DISPOSE OF DEVICES INDICATED TO BE REMOVED. OFFER EQUIPMENT TO SEPTA AND DISPOSE OF THE EQUIPMENT THAT SEPTA DOES NOT WISH TO RETAIN.
9. COORDINATE WORK CONCERNING EXISTING EQUIPMENT AND SERVICES IN THE BUILDING. COORDINATE REQUIRED POWER INTERRUPTIONS WITH SEPTA PER DIVISION 1 SPECIFICATIONS.
10. EQUIPMENT, PANELS OR DISCONNECT SWITCHES INDICATED TO BE REMOVED SHALL INCLUDE THE REMOVAL OF ALL CONDUCTORS, INCLUDING CONDUIT AND WIRING, AND BE REMOVED BACK TO SOURCE.

KEYED NOTES:

1 DE-ENERGIZE AND REMOVE LIGHTING FIXTURES AND SWITCHES. REMOVE ALL WIRE AND CONDUIT BACK TO SOURCE.

2 DE-ENERGIZE AND REMOVE ALL LIGHTS, SWITCHES, WIRE AND CONDUIT IN THIS AREA.

6 4 2 0 6
SCALE: 3/16"=1'0"

50% SUBMISSION
NOT FOR CONSTRUCTION

SOUTHEASTERN PENNSYLVANIA TRANSPORTATION AUTHORITY
EM&C DIVISION
1234 MARKET ST, 13TH FL,
PHILADELPHIA, PA 19107

CHIEF ENGINEER - EM&C
CHIEF ENGINEERING OFFICER - B&B
CHIEF RAIL TRANSIT OFFICER
SYSTEM SAFETY
DIRECTOR OF ENGINEERING - B&B
MANAGER - ARCH / ENGINEERING
PROJECT MANAGER

HDR
HDR Engineering, Inc.
Philadelphia, PA

ARORA
ARORA ENGINEERS
81 WILMINGTON WEST CHESTER PIKE
CHADDS FORD, PA 19317
PHONE 610.459.2600
FAX 610.459.7900

REV	DATE	DESCRIPTION	BY	CK'D	APD

DATE PRINTED: 10/21/2025

PARK
SUBWAY/ELEVATED TRAINS
TRACTION POWER SUBSTATION REHABILITATION
ELECTRICAL
DEMOLITION LIGHTING MEZZANINE FLOOR PLAN

SCALE: AS SHOWN	SCALE FACTOR: 1:1
DATE: 08/22/2025	DRAWN BY: MM / CHECKED BY: JB
WORK ORDER NO.: 276482	
SHEET NUMBER: **E206**	
DWG. NO.: 7 OF 18	
SHT. NO.: 198 OF 452	
ARCHIVE NO.:	
COMPUTER FILE NO.: 17AN-E206	REV. NO.: ---

STATUS: 50% SUBMISSION

C:\PW\WORKING\PITTD173186\17AN-E206.DWG

PROPOSED SCOPE OF WORK:

A. REFER TO PROPOSED DRAWINGS FOR NEW WORK. STAGING OF NEW WORK SHALL BE COORDINATED WITH THE SEPTA PROJECT MANAGER TO ENSURE CONTINUITY AND ENSURING SEAMLESS OPERATIONS OF EQUIPMENT.

B. NEW TRANSFORMERS AND ASSOCIATED CIRCUITRY.

C. NEW PANELS AND ASSOCIATED CIRCUITRY.

D. NEW DISCONNECT SWITCHES AND ASSOCIATED CIRCUITRY.

E. NEW TRANSFER SWITCHES AND ASSOCIATED CIRCUITRY.

F. NEW BATTERY CHARGERS AND ASSOCIATED CIRCUITRY.

G. NEW BATTERIES AND ASSOCIATED CIRCUITRY.

H. NEW CIRCUITRY TO MECHANICAL ITEMS.

I. NEW RECEPTACLES AND ASSOCIATED CIRCUITRY.

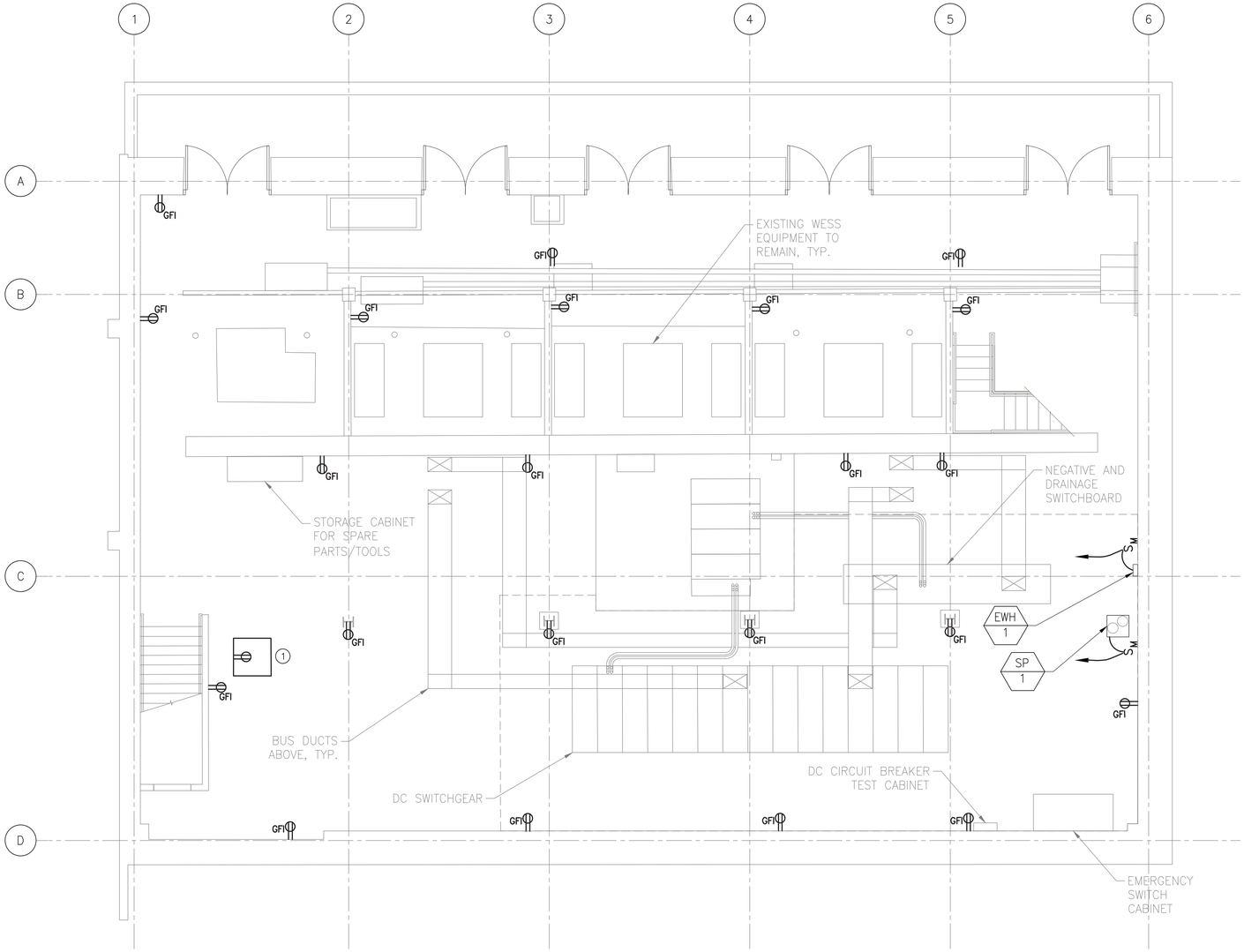

1 / E207 BASEMENT PROPOSED FLOOR PLAN
SCALE: 3/16" = 1'-0"

GENERAL NOTES:

1. FOR ELECTRICAL SYMBOLS AND ABBREVIATIONS REFER TO DRAWING E200.
2. PLAN IS DIAGRAMMATIC. FIELD VERIFY EXACT LOCATIONS AND DIMENSIONS.
3. THE CONTRACTOR SHALL NOT INTERRUPT EXISTING POWER DISTRIBUTION SYSTEMS.
4. EXISTING DISTRIBUTION GEAR SHALL REMAIN ENERGIZED UNTIL ALL NEW FEEDERS ARE READY FOR CUT OVER.
5. REFER TO PANEL SCHEDULES ON DRAWINGS E216 AND E217 FOR ADDITIONAL REQUIREMENTS.
6. PROVIDE COMPLETE AND ACCURATE CIRCUIT DIRECTORIES AND ALL NEW PANELS AFTER NEW WORK IS COMPLETE.
7. COORDINATE ALL CONNECTIONS TO MECHANICAL EQUIPMENT WITH TRADE CONTRACTOR PRIOR TO COMMENCING WORK.
8. ALL INTERIOR RECEPTACLES SHALL BE GFCI TYPE AND MOUNTED AT 36" AFF UNLESS OTHERWISE INDICATED.
9. ALL EXTERIOR RECEPTACLES SHALL BE GFCI TYPE MOUNTED IN A WEATHERPROOF GANG BOX, AND MOUNTED AT 48" AFG UNLESS OTHERWISE INDICATED.

KEYED NOTES:

(1) FIBER OPTIC INTERCONNECTION CABINET. REFER TO COMMUNICATIONS WORKSCOPE.

6 4 2 0 6
SCALE: 3/16"=1'0"

50% SUBMISSION
NOT FOR CONSTRUCTION

SOUTHEASTERN PENNSYLVANIA TRANSPORTATION AUTHORITY
EM&C DIVISION
1234 MARKET ST, 13TH FL, PHILADELPHIA, PA 19107

CHIEF ENGINEER - EM&C
CHIEF ENGINEERING OFFICER - B&B
CHIEF RAIL TRANSIT OFFICER
SYSTEM SAFETY
DIRECTOR OF ENGINEERING - B&B
MANAGER - ARCH / ENGINEERING
PROJECT MANAGER

HDR Engineering, Inc.
Philadelphia, PA

ARORA ENGINEERS
61 WILMINGTON WEST CHESTER PIKE
CHADDS FORD, PA 19317
PHONE 610.485.3600
FAX 610.485.7900

REV	DATE	DESCRIPTION	BY	CK'D	APP'D

DATE PRINTED: 10/21/2025

PARK
SUBWAY/ELEVATED TRAINS
TRACTION POWER SUBSTATION REHABILITATION
ELECTRICAL
PROPOSED POWER BASEMENT FLOOR PLAN

SCALE: AS SHOWN	SCALE FACTOR: 1:1
DATE: 08/22/2025	DRAWN BY: MM
	CHECKED BY: JB
WORK ORDER NO.: 276482	
SHEET NUMBER: **E207**	
DWG. NO.: 8 OF 18	
SHT. NO.: 199 OF 452	
ARCHIVE NO.:	
COMPUTER FILE NO.: 17AN-E207	REV. NO.: ---

STATUS: 50% SUBMISSION

C:\PW\WORKING\PITTTD173118617AN-E207.DWG

PROPOSED SCOPE OF WORK:

A. REFER TO PROPOSED DRAWINGS FOR NEW WORK. STAGING OF NEW WORK SHALL BE COORDINATED WITH THE SEPTA PROJECT MANAGER TO ENSURE CONTINUITY AND ENSURING SEAMLESS OPERATIONS OF EQUIPMENT.

B. NEW TRANSFORMERS AND ASSOCIATED CIRCUITRY.

C. NEW PANELS AND ASSOCIATED CIRCUITRY.

D. NEW DISCONNECT SWITCHES AND ASSOCIATED CIRCUITRY.

E. NEW TRANSFER SWITCHES AND ASSOCIATED CIRCUITRY.

F. NEW BATTERY CHARGERS AND ASSOCIATED CIRCUITRY.

G. NEW BATTERIES AND ASSOCIATED CIRCUITRY.

H. NEW CIRCUITRY TO MECHANICAL ITEMS.

I. NEW RECEPTACLES AND ASSOCIATED CIRCUITRY.

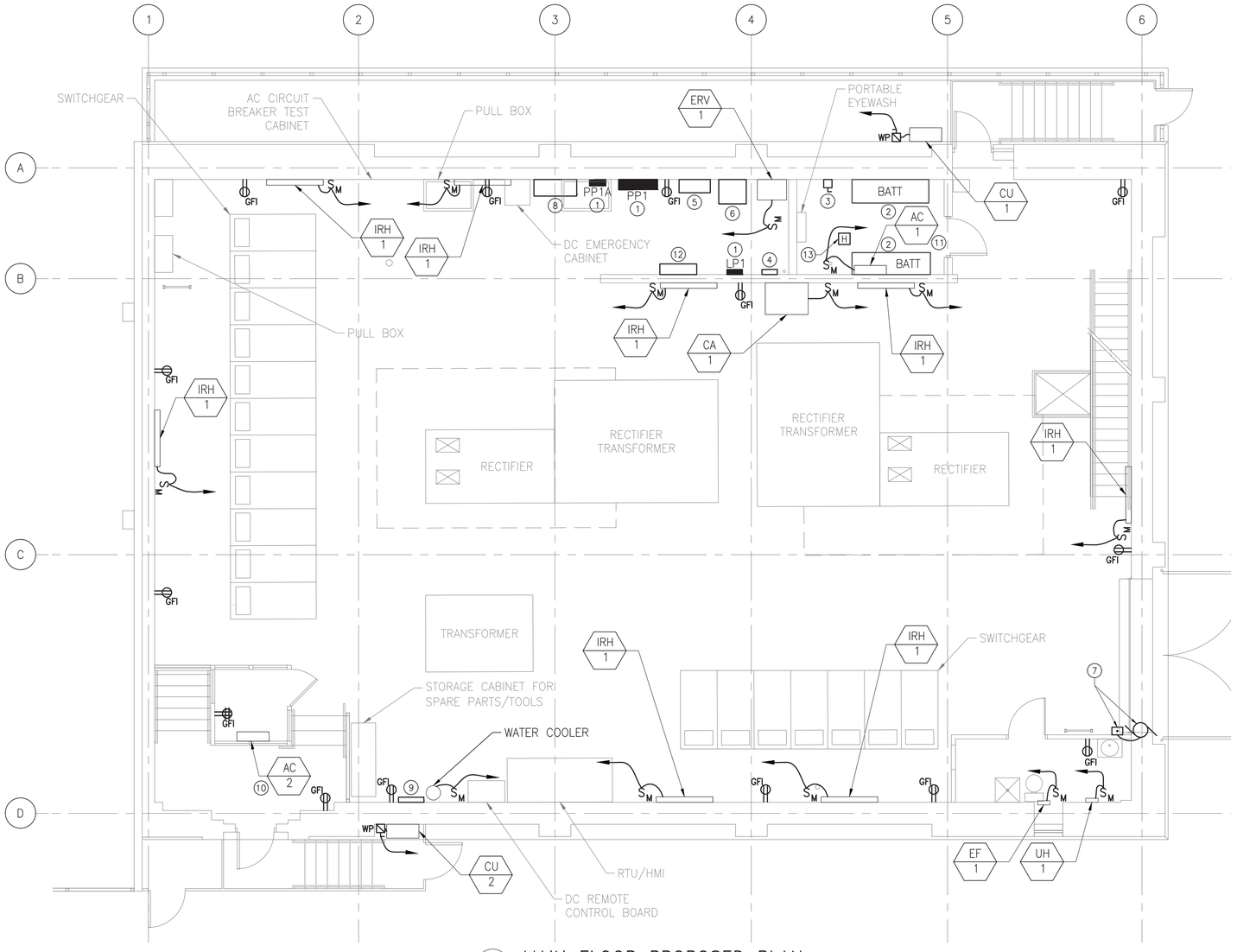

1 / E208 MAIN FLOOR PROPOSED PLAN
SCALE: 3/16" = 1'-0"

GENERAL NOTES:

1. FOR ELECTRICAL SYMBOLS AND ABBREVIATIONS REFER TO DRAWING E200.
2. PLAN IS DIAGRAMMATIC. FIELD VERIFY EXACT LOCATIONS AND DIMENSIONS.
3. THE CONTRACTOR SHALL NOT INTERRUPT EXISTING POWER DISTRIBUTION SYSTEMS.
4. EXISTING DISTRIBUTION GEAR SHALL REMAIN ENERGIZED UNTIL ALL NEW FEEDERS ARE READY FOR CUT OVER.
5. REFER TO PANEL SCHEDULES ON DRAWINGS E216 AND E217 FOR ADDITIONAL REQUIREMENTS.
6. PROVIDE COMPLETE AND ACCURATE CIRCUIT DIRECTORIES AND ALL NEW PANELS AFTER NEW WORK IS COMPLETE.
7. COORDINATE ALL CONNECTIONS TO MECHANICAL EQUIPMENT WITH TRADE CONTRACTOR PRIOR COMMENCING TO WORK.
8. ALL INTERIOR RECEPTACLES SHALL BE GFCI TYPE AND MOUNTED AT 36" AFF UNLESS OTHERWISE INDICATED.
9. ALL EXTERIOR RECEPTACLES SHALL BE GFCI TYPE MOUNTED IN A WEATHERPROOF GANG BOX, AND MOUNTED AT 48" AFG UNLESS OTHERWISE INDICATED.

KEYED NOTES:

1. FURNISH AND INSTALL PANELS. REFER TO PANEL SCHEDULES ON DRAWINGS E216 AND E217.
2. FURNISH AND INSTALL BATTERIES AND BATTERY RACKS.
3. FURNISH AND INSTALL BATTERY FUSED DISCONNECT SWITCH.
4. FURNISH AND INSTALL 125V DC PANEL.
5. FURNISH AND INSTALL BATTERY TRANSFER PANEL.
6. FURNISH AND INSTALL BATTERY CHARGER.
7. FURNISH AND INSTALL OVERHEAD DOOR AND CONTROLLER.
8. FURNISH AND INSTALL 400A ATS-1.
9. FURNISH AND INSTALL 1P/20A 120V CIRCUIT TO FIRE ALARM CONTROL PANEL.
10. AC-2 IS POWERED FROM CIRCUIT SUPPLYING CU-2.
11. AC-1 IS POWERED FROM CIRCUIT SUPPLYING CU-1.
12. FURNISH AND INSTALL DROPPING RESISTORS.
13. FURNISH AND INSTALL HYDROGEN GAS DETECTION SYSTEM.

6 4 2 0 6
SCALE: 3/16"=1'0"

50% SUBMISSION
NOT FOR CONSTRUCTION

SOUTHEASTERN PENNSYLVANIA TRANSPORTATION AUTHORITY
EM&C DIVISION
1234 MARKET ST, 13TH FL, PHILADELPHIA, PA 19107

CHIEF ENGINEER - EM&C
CHIEF ENGINEERING OFFICER - B&B
CHIEF RAIL TRANSIT OFFICER
SYSTEM SAFETY
DIRECTOR OF ENGINEERING - B&B
MANAGER - ARCH / ENGINEERING
PROJECT MANAGER

HDR Engineering, Inc.
Philadelphia, PA

ARORA ENGINEERS
81 WILMINGTON-WEST CHESTER PIKE
CHADDS FORD, PA 19317
PHONE 610.459.2600
FAX 610.459.7900

REV	DATE	DESCRIPTION	BY	CK'D	APP'D

DATE PRINTED: 10/21/2025

PARK
SUBWAY/ELEVATED TRAINS
TRACTION POWER SUBSTATION REHABILITATION
ELECTRICAL
PROPOSED POWER FIRST FLOOR PLAN

SCALE: AS SHOWN	SCALE FACTOR: 1:1
DATE: 08/22/2025	DRAWN BY: MM
	CHECKED BY: JB
WORK ORDER NO.: 276482	
SHEET NUMBER: **E208**	
DWG. NO.: 9 OF 18	
SHT. NO.: 200 OF 452	
ARCHIVE NO.:	
COMPUTER FILE NO.: 17AN-E208	REV. NO.: ---

STATUS: 50% SUBMISSION

C:\PWWORKING\PITTDO\73118617AN-E208.DWG

PROPOSED SCOPE OF WORK:

A. REFER TO PROPOSED DRAWINGS FOR NEW WORK. STAGING OF NEW WORK SHALL BE COORDINATED WITH THE SEPTA PROJECT MANAGER TO ENSURE CONTINUITY AND ENSURING SEAMLESS OPERATIONS OF EQUIPMENT.

B. NEW TRANSFORMERS AND ASSOCIATED CIRCUITRY.

C. NEW PANELS AND ASSOCIATED CIRCUITRY.

D. NEW DISCONNECT SWITCHES AND ASSOCIATED CIRCUITRY.

E. NEW TRANSFER SWITCHES AND ASSOCIATED CIRCUITRY.

F. NEW BATTERY CHARGERS AND ASSOCIATED CIRCUITRY.

G. NEW BATTERIES AND ASSOCIATED CIRCUITRY.

H. NEW CIRCUITRY TO MECHANICAL ITEMS.

I. NEW RECEPTACLES AND ASSOCIATED CIRCUITRY.

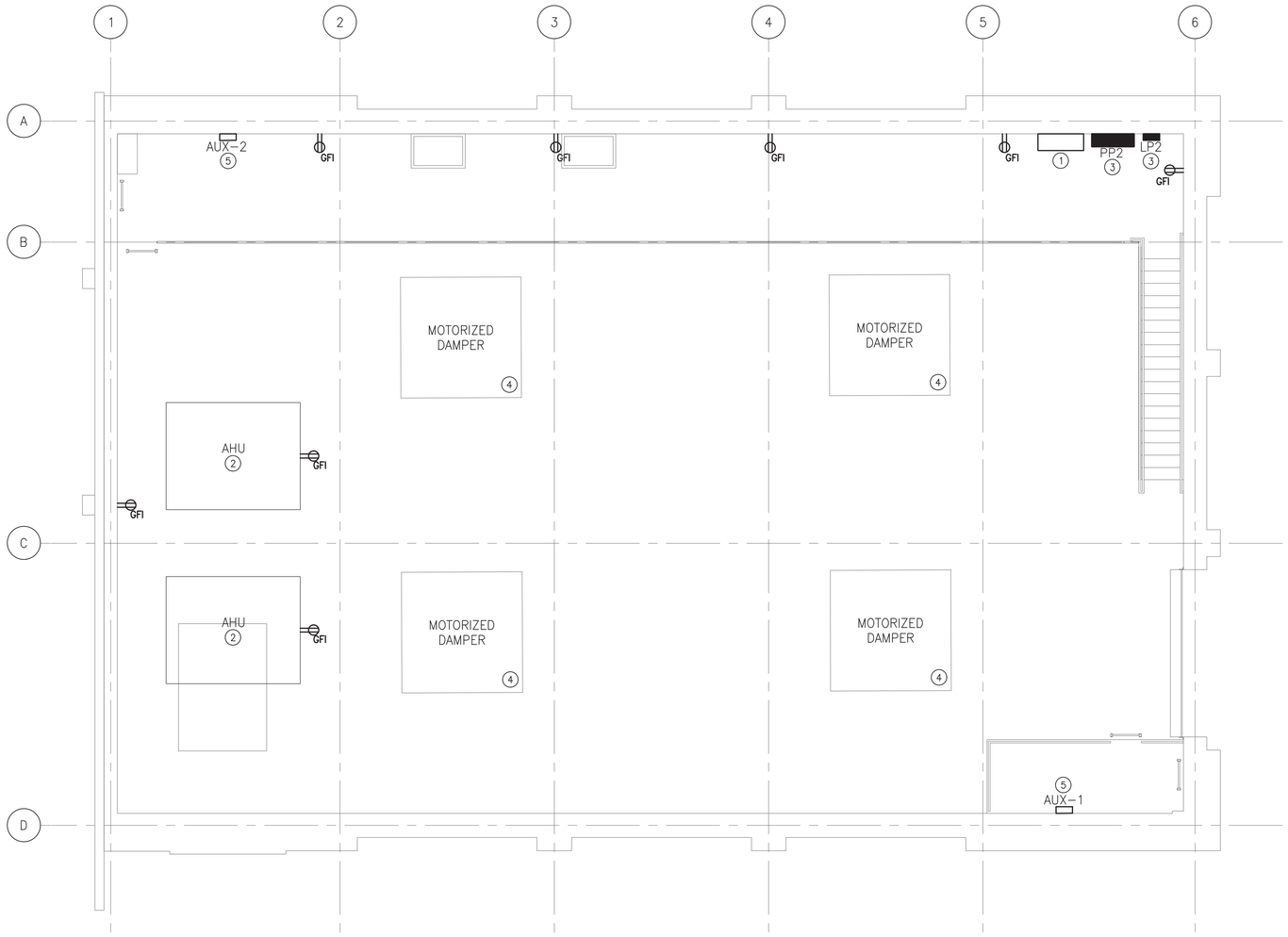

1/E209 MEZZANINE PROPOSED FLOOR PLAN
SCALE: 3/16" = 1'–0"

GENERAL NOTES:

1. FOR ELECTRICAL SYMBOLS AND ABBREVIATIONS REFER TO DRAWING E200.
2. PLAN IS DIAGRAMMATIC. FIELD VERIFY EXACT LOCATIONS AND DIMENSIONS.
3. THE CONTRACTOR SHALL NOT INTERRUPT EXISTING POWER DISTRIBUTION SYSTEMS.
4. EXISTING DISTRIBUTION GEAR SHALL REMAIN ENERGIZED UNTIL ALL NEW FEEDERS ARE READY FOR CUT OVER.
5. REFER TO PANEL SCHEDULES ON DRAWINGS E216 AND E217 FOR ADDITIONAL REQUIREMENTS.
6. PROVIDE COMPLETE AND ACCURATE CIRCUIT DIRECTORIES AND ALL NEW PANELS AFTER NEW WORK IS COMPLETE.
7. COORDINATE ALL INTERCONNECTIONS TO MECHANICAL EQUIPMENT WITH TRADE CONTRACTOR PRIOR TO COMMENCING WORK.
8. ALL INTERIOR RECEPTACLES SHALL BE GFCI TYPE AND MOUNTED AT 36" AFF UNLESS OTHERWISE INDICATED.
9. ALL EXTERIOR RECEPTACLES SHALL BE GFCI TYPE MOUNTED IN A WEATHERPROOF GANG BOX, AND MOUNTED AT 48" AFG UNLESS OTHERWISE INDICATED.

KEYED NOTES:

(1) FURNISH AND INSTALL 400A ATS–2.

(2) FURNISH AND INSTALL CONNECTIONS TO TWO (2) EXISTING AIR HANDLING UNITS SUSPENDED FROM ROOF. FURNISH AND INSTALL 100A/3P DISCONNECT AT EACH. 120V/20A DUPLEX RECEPTACLE AT EACH.

(3) FURNISH AND INSTALL PANELS. REFER TO PANEL SCHEDULES ON DRAWINGS E216 AND E217.

(4) FURNISH AND INSTALL POWER TO ROOF DAMPERS.

(5) FURNISH AND INSTALL SECONDARY 400A, 208V, 3ø ENCLOSED CIRCUIT BREAKER.

6 4 2 0 6
SCALE: 3/16"=1'0"

50% SUBMISSION
NOT FOR CONSTRUCTION

SOUTHEASTERN PENNSYLVANIA TRANSPORTATION AUTHORITY
EM&C DIVISION
1234 MARKET ST, 13TH FL,
PHILADELPHIA, PA 19107

CHIEF ENGINEER - EM&C
CHIEF ENGINEERING OFFICER - B&B
CHIEF RAIL TRANSIT OFFICER
SYSTEM SAFETY
DIRECTOR OF ENGINEERING - B&B
MANAGER - ARCH / ENGINEERING
PROJECT MANAGER

HDR Engineering, Inc.
Philadelphia, PA

ARORA ENGINEERS
61 WILMINGTON WEST CHESTER PIKE
CHADDS FORD, PA 19317
PHONE 610.485.3600
FAX 610.485.7910

REV	DATE	DESCRIPTION	BY	CKD	APD

DATE PRINTED: 10/21/2025

STATUS: 50% SUBMISSION

PARK
SUBWAY/ELEVATED TRAINS
TRACTION POWER SUBSTATION REHABILITATION
ELECTRICAL
PROPOSED POWER MEZZANINE FLOOR PLAN

SCALE: AS SHOWN	SCALE FACTOR: 1:1
DATE: 08/22/2025	DRAWN BY: MM
	CHECKED BY: JB
WORK ORDER NO.: 276482	
SHEET NUMBER: **E209**	
DWG. NO.: 10 OF 18	
SHT. NO.: 201 OF 452	
ARCHIVE NO.:	
COMPUTER FILE NO.: 17AN-E209	REV. NO.: ---

C:\PW\WORKING\PITTID173186\17AN-E209.DWG

PROPOSED SCOPE OF WORK:

A. REFER TO PROPOSED DRAWINGS FOR NEW WORK. STAGING OF NEW WORK SHALL BE COORDINATED WITH THE SEPTA PROJECT MANAGER TO ENSURE CONTINUITY AND ENSURING SEAMLESS OPERATIONS OF EQUIPMENT.

B. NEW INTERIOR LIGHTING AND ASSOCIATED SWITCHING AND CIRCUITRY.

C. NEW EXTERIOR LIGHTING AND ASSOCIATED SWITCHING AND CIRCUITRY.

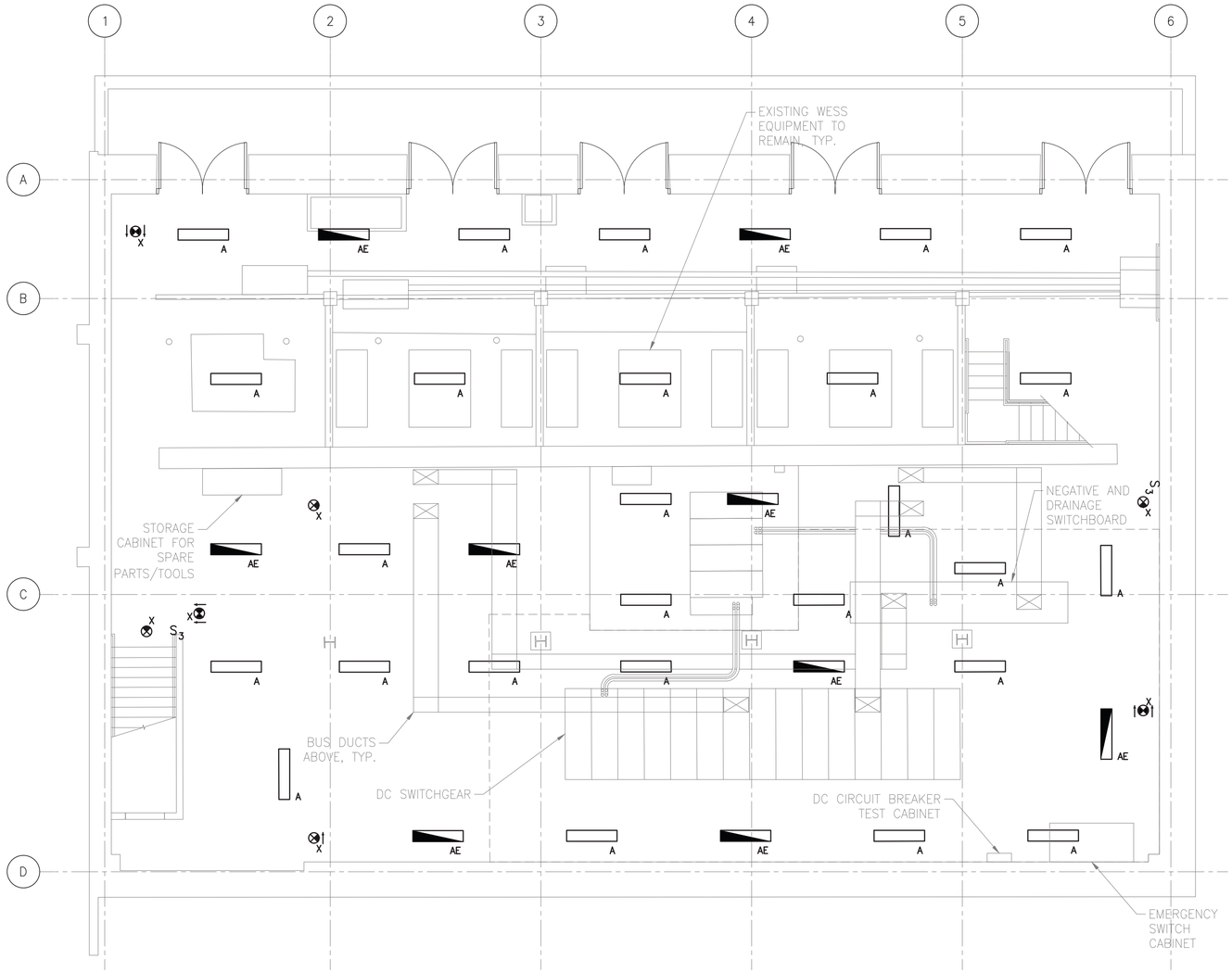

1 E210 BASEMENT PROPOSED LIGHTING PLAN
SCALE: 3/16" = 1'-0"

GENERAL NOTES:

1. FOR ELECTRICAL SYMBOLS AND ABBREVIATIONS REFER TO DRAWING E200.
2. PLAN IS DIAGRAMMATIC. FIELD VERIFY EXACT LOCATIONS AND DIMENSIONS.
3. THE CONTRACTOR SHALL NOT INTERRUPT EXISTING POWER DISTRIBUTION SYSTEMS.
4. REFER TO PANEL SCHEDULES ON DRAWINGS E216 AND E217 FOR ADDITIONAL REQUIREMENTS.
5. PROVIDE COMPLETE AND ACCURATE CIRCUIT DIRECTORIES AND ALL NEW PANELS AFTER NEW WORK IS COMPLETE.
6. REFER TO LUMINAIRE SCHEDULE ON DRAWING E215.

6 4 2 0 6
SCALE: 3/16"=1'0"

50% SUBMISSION
NOT FOR CONSTRUCTION

SOUTHEASTERN PENNSYLVANIA TRANSPORTATION AUTHORITY
EM&C DIVISION
1234 MARKET ST, 13TH FL,
PHILADELPHIA, PA 19107

CHIEF ENGINEER - EM&C
CHIEF ENGINEERING OFFICER - B&B
CHIEF RAIL TRANSIT OFFICER
SYSTEM SAFETY
DIRECTOR OF ENGINEERING - B&B
MANAGER - ARCH / ENGINEERING
PROJECT MANAGER

HDR Engineering, Inc.
Philadelphia, PA

ARORA ENGINEERS
61 WILMINGTON WEST CHESTER PIKE
CHADDS FORD, PA 19317
PHONE 610.459.2600
FAX 610.459.7900

REV	DATE	DESCRIPTION	BY	CK'D	APP'D

DATE PRINTED: 10/21/2025

PARK
SUBWAY/ELEVATED TRAINS
TRACTION POWER SUBSTATION REHABILITATION
ELECTRICAL
PROPOSED LIGHTING BASEMENT FLOOR PLAN

SCALE: AS SHOWN	SCALE FACTOR: 1:1
DATE: 08/22/2025	DRAWN BY: MM / CHECKED BY: JB
WORK ORDER NO.: 276482	
SHEET NUMBER: **E210**	
DWG. NO.: 11 OF 18	
SHT. NO.: 202 OF 452	
ARCHIVE NO.:	
COMPUTER FILE NO.: 17AN-E210	REV. NO.: ---

STATUS: 50% SUBMISSION

C:\PW\WORKING\PITTD\7331186\17AN-E210.DWG

PROPOSED SCOPE OF WORK:

A. REFER TO PROPOSED DRAWINGS FOR NEW WORK. STAGING OF NEW WORK SHALL BE COORDINATED WITH THE SEPTA PROJECT MANAGER TO ENSURE CONTINUITY AND ENSURING SEAMLESS OPERATIONS OF EQUIPMENT.

B. NEW INTERIOR LIGHTING AND ASSOCIATED SWITCHING AND CIRCUITRY.

C. NEW EXTERIOR LIGHTING AND ASSOCIATED SWITCHING AND CIRCUITRY.

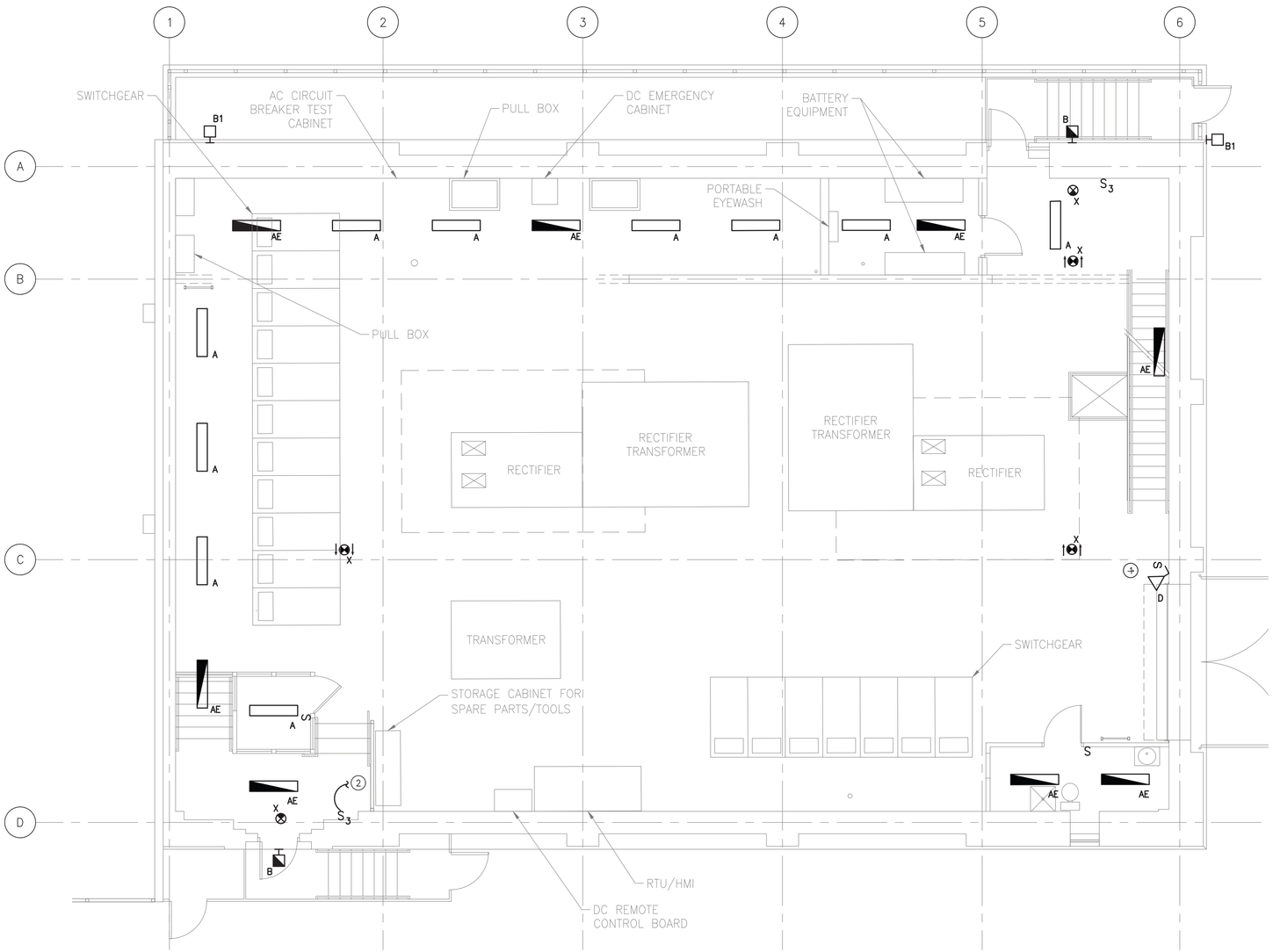

1 / E211 MAIN FLOOR PROPOSED LIGHTING PLAN
SCALE: 3/16" = 1'-0"

GENERAL NOTES:

1. FOR ELECTRICAL SYMBOLS AND ABBREVIATIONS REFER TO DRAWING E200.
2. PLAN IS DIAGRAMMATIC. FIELD VERIFY EXACT LOCATIONS AND DIMENSIONS.
3. THE CONTRACTOR SHALL NOT INTERRUPT EXISTING POWER DISTRIBUTION SYSTEMS.
4. REFER TO PANEL SCHEDULES ON DRAWINGS E216 AND E217 FOR ADDITIONAL REQUIREMENTS.
5. PROVIDE COMPLETE AND ACCURATE CIRCUIT DIRECTORIES AND ALL NEW PANELS AFTER NEW WORK IS COMPLETE.
6. REFER TO LUMINAIRE SCHEDULE ON DRAWING E215.

KEYED NOTES:

(1) FURNISH AND INSTALL LOADING DOCK LIGHT.

(2) TO LIGHT FIXTURES ON THE MEZZANINE. REFER TO DRAWING E212.

6 4 2 0 6
SCALE: 3/16"=1'0"

50% SUBMISSION
NOT FOR CONSTRUCTION

SOUTHEASTERN PENNSYLVANIA TRANSPORTATION AUTHORITY
EM&C DIVISION
1234 MARKET ST, 13TH FL, PHILADELPHIA, PA 19107

CHIEF ENGINEER - EM&C
CHIEF ENGINEERING OFFICER - B&B
CHIEF RAIL TRANSIT OFFICER
SYSTEM SAFETY
DIRECTOR OF ENGINEERING - B&B
MANAGER - ARCH / ENGINEERING
PROJECT MANAGER

HDR Engineering, Inc.
Philadelphia, PA

ARORA ENGINEERS
81 WILMINGTON WEST CHESTER PIKE
CHADDS FORD, PA 19317
PHONE 610.485.3600
FAX 610.485.7960

REV	DATE	DESCRIPTION	BY	CKD	APD

DATE PRINTED: 10/21/2025

PARK
SUBWAY/ELEVATED TRAINS
TRACTION POWER SUBSTATION REHABILITATION
ELECTRICAL
PROPOSED LIGHTING FIRST FLOOR PLAN

SCALE: AS SHOWN	SCALE FACTOR: 1:1
DATE: 08/22/2025	DRAWN BY: MM
	CHECKED BY: JB
WORK ORDER NO.: 276482	
SHEET NUMBER: **E211**	
DWG. NO.: 12 OF 18	
SHT. NO.: 203 OF 452	
ARCHIVE NO.:	
COMPUTER FILE NO.: 17AN-E211	REV. NO.: ----

STATUS: 50% SUBMISSION

C:\PW\WORKING\PITTDO1731186\17AN-E211.DWG

PROPOSED SCOPE OF WORK:

A. REFER TO PROPOSED DRAWINGS FOR NEW WORK. STAGING OF NEW WORK SHALL BE COORDINATED WITH THE SEPTA PROJECT MANAGER TO ENSURE CONTINUITY AND ENSURING SEAMLESS OPERATIONS OF EQUIPMENT.

B. NEW INTERIOR LIGHTING AND ASSOCIATED SWITCHING AND CIRCUITRY.

C. NEW EXTERIOR LIGHTING AND ASSOCIATED SWITCHING AND CIRCUITRY.

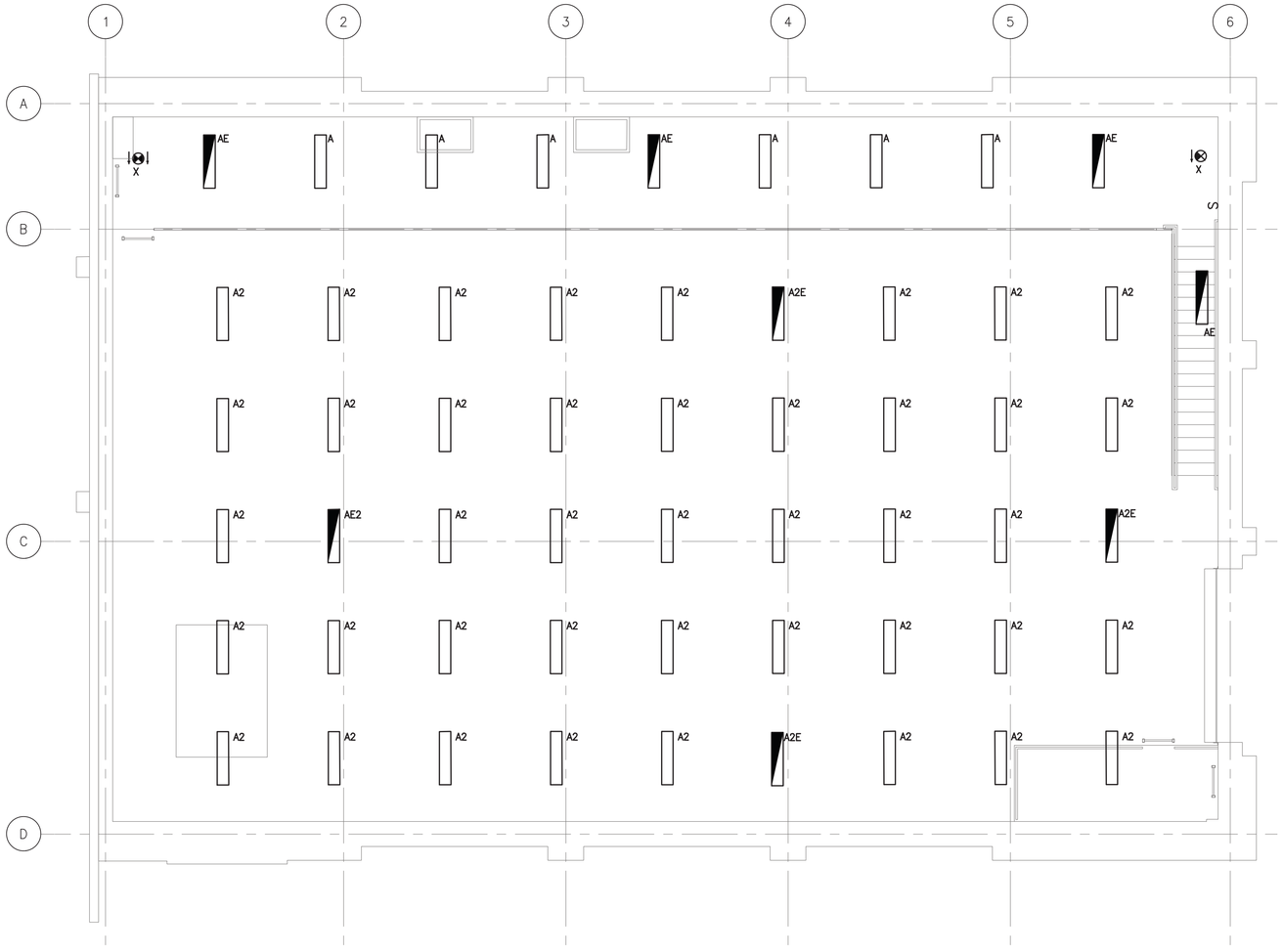

1 / E212 MEZZANINE PROPOSED LIGHTING PLAN
SCALE: 3/16" = 1'-0"

GENERAL NOTES:

1. FOR ELECTRICAL SYMBOLS AND ABBREVIATIONS REFER TO DRAWING E200.
2. PLAN IS DIAGRAMMATIC. FIELD VERIFY EXACT LOCATIONS AND DIMENSIONS.
3. THE CONTRACTOR SHALL NOT INTERRUPT EXISTING POWER DISTRIBUTION SYSTEMS.
4. REFER TO PANEL SCHEDULES ON DRAWINGS E216 AND E217 FOR ADDITIONAL REQUIREMENTS.
5. PROVIDE COMPLETE AND ACCURATE CIRCUIT DIRECTORIES AND ALL NEW PANELS AFTER NEW WORK IS COMPLETE.
6. REFER TO LUMINAIRE SCHEDULE ON DRAWING E215.

6 4 2 0 6
SCALE: 3/16"=1'0"

50% SUBMISSION
NOT FOR CONSTRUCTION

SOUTHEASTERN PENNSYLVANIA TRANSPORTATION AUTHORITY
EM&C DIVISION
1234 MARKET ST, 13TH FL,
PHILADELPHIA, PA 19107

CHIEF ENGINEER - EM&C
CHIEF ENGINEERING OFFICER - B&B
CHIEF RAIL TRANSIT OFFICER
SYSTEM SAFETY
DIRECTOR OF ENGINEERING - B&B
MANAGER - ARCH / ENGINEERING
PROJECT MANAGER

HDR Engineering, Inc.
Philadelphia, PA

ARORA ENGINEERS
61 WILMINGTON WEST CHESTER PIKE
CHADDS FORD, PA 19317
PHONE 610.485.3600
FAX 610.485.7900

REV	DATE	DESCRIPTION	BY	CKD	APD

DATE PRINTED: 10/21/2025

PARK
SUBWAY/ELEVATED TRAINS
TRACTION POWER SUBSTATION REHABILITATION
ELECTRICAL
PROPOSED LIGHTING MEZZANINE FLOOR PLAN

SCALE: AS SHOWN	SCALE FACTOR: 1:1
DATE: 08/22/2025	DRAWN BY: MM
	CHECKED BY: JB
WORK ORDER NO.: 276482	
SHEET NUMBER: **E212**	
DWG. NO.: 13 OF 18	
SHT. NO.: 204 OF 452	
ARCHIVE NO.:	
COMPUTER FILE NO.: 17AN-E212	REV. NO.: ---

STATUS: 50% SUBMISSION

C:\PW\WORKING\PITTIDO173118617AN-E212.DWG

GENERAL NOTES:

1. FOR ELECTRICAL SYMBOLS AND ABBREVIATIONS REFER TO DRAWING E200.

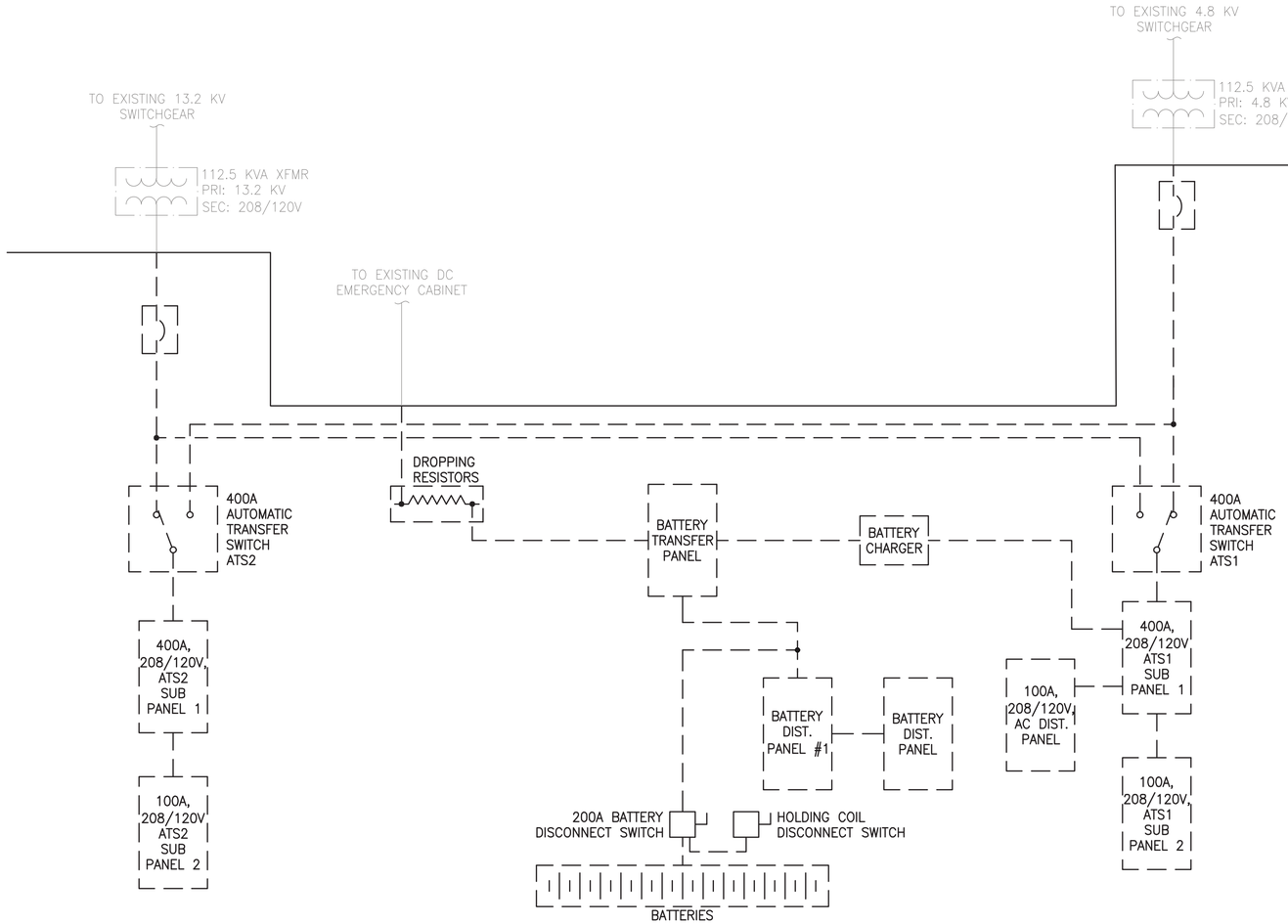

1 / E213 ELECTRICAL DEMOLITION SINGLE LINE DIAGRAM
SCALE: NONE

50% SUBMISSION
NOT FOR CONSTRUCTION

SOUTHEASTERN PENNSYLVANIA TRANSPORTATION AUTHORITY
EM&C DIVISION
1234 MARKET ST, 13TH FL, PHILADELPHIA, PA 19107

CHIEF ENGINEER - EM&C
CHIEF ENGINEERING OFFICER - B&B
CHIEF RAIL TRANSIT OFFICER
SYSTEM SAFETY
DIRECTOR OF ENGINEERING - B&B
MANAGER - ARCH / ENGINEERING
PROJECT MANAGER

HDR Engineering, Inc.
Philadelphia, PA

ARORA ENGINEERS
81 WILMINGTON WEST CHESTER PIKE
CHADDS FORD, PA 19317
PHONE 610.485.2600
FAX 610.485.7900

REV	DATE	DESCRIPTION	BY	CK'D	APP'D

DATE PRINTED: 10/21/2025

PARK
SUBWAY/ELEVATED TRAINS
TRACTION POWER SUBSTATION REHABILITATION
ELECTRICAL
DEMOLITION SINGLE LINE DIAGRAM

SCALE: AS SHOWN	SCALE FACTOR: 1:1
DATE: 08/22/2025	DRAWN BY: MM / CHECKED BY: JB
WORK ORDER NO.: 276482	
SHEET NUMBER: **E213**	
DWG. NO.: 14 OF 18	
SHT. NO.: 205 OF 452	
ARCHIVE NO.:	
COMPUTER FILE NO.: 17AN-E213	REV. NO.: ---

STATUS: 50% SUBMISSION

C:\PW\WORKING\PITTD173186\17AN-E213.DWG

PROPOSED SCOPE OF WORK:

A. REFER TO PROPOSED DRAWINGS FOR NEW WORK. STAGING OF NEW WORK SHALL BE COORDINATED WITH THE SEPTA PROJECT MANAGER TO ENSURE CONTINUITY OF CIRCUITRY AND ENSURING SEAMLESS OPERATION OF EQUIPMENT.

GENERAL NOTES:

1. FOR ELECTRICAL SYMBOLS AND ABBREVIATION REFER TO DRAWING E200.
2. EXISTING DISTRIBUTION GEAR SHALL REMAIN ENERGIZED UNTIL ALL NEW FEEDERS ARE READY FOR CUT OVER.
3. THE CONTRACTOR SHALL PROVIDE COMPLETE AND ACCURATE CIRCUIT DIRECTORIES FOR ALL NEW PANELS AFTER NEW WORK IS COMPLETED.

FEEDER SCHEDULE

FEEDER NUMBER	QUANTITY OF SETS	QUANTITY OF CONDUCTORS	600 VOLT COPPER CONDUCTOR SIZE	600 VOLT COPPER GROUND CONDUCTOR SIZE	CONDUIT TRADE SIZE	NOTES
⬡1	–	–	–	–	–	–
⬡2	–	–	–	–	–	–
⬡3	–	–	–	–	–	–
⬡4	–	–	–	–	–	–
⬡5	–	–	–	–	–	–
⬡6	–	–	–	–	–	–
⬡7	–	–	–	–	–	–
⬡8	–	–	–	–	–	–
⬡9	–	–	–	–	–	–

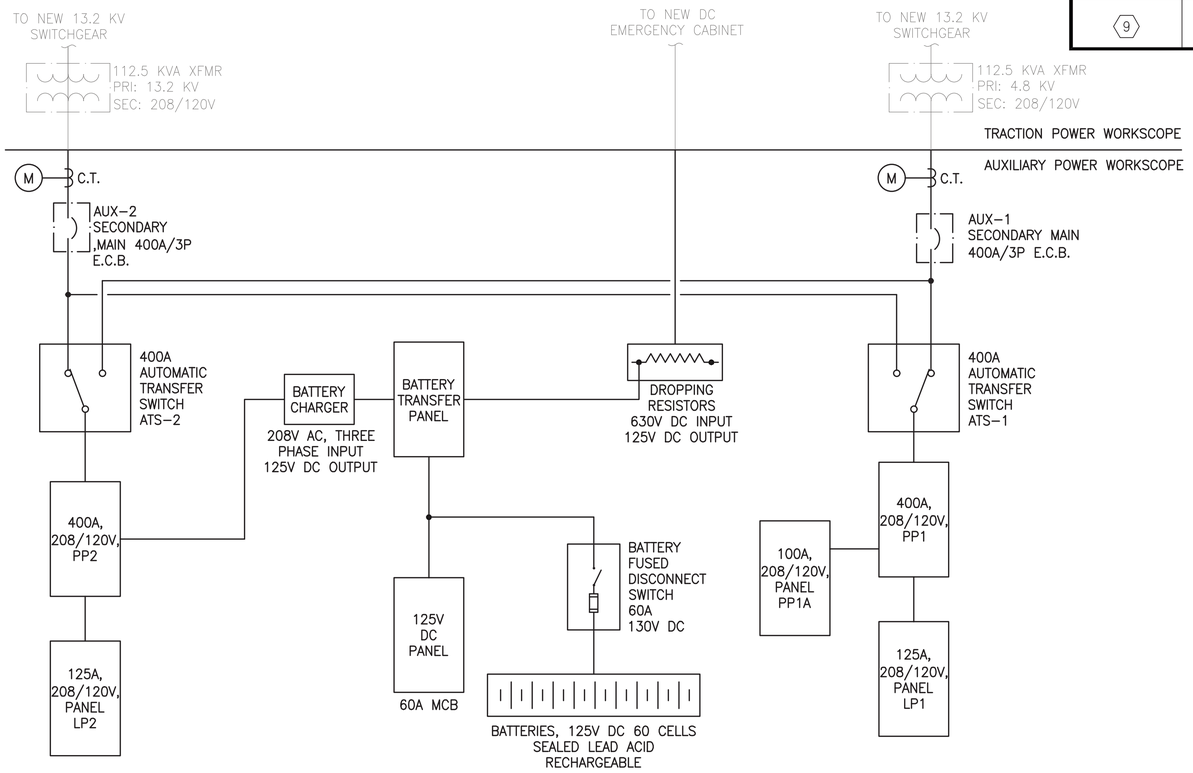

1 E214 ELECTRICAL PROPOSED SINGLE LINE DIAGRAM
SCALE: NONE

50% SUBMISSION
NOT FOR CONSTRUCTION

SOUTHEASTERN PENNSYLVANIA TRANSPORTATION AUTHORITY
EM&C DIVISION
1234 MARKET ST, 13TH FL.
PHILADELPHIA, PA 19107

CHIEF ENGINEER - EM&C
CHIEF ENGINEERING OFFICER - B&B
CHIEF RAIL TRANSIT OFFICER
SYSTEM SAFETY
DIRECTOR OF ENGINEERING - B&B
MANAGER - ARCH / ENGINEERING
PROJECT MANAGER

HDR Engineering, Inc.
Philadelphia, PA

ARORA ENGINEERS
16 WILMINGTON-WEST CHESTER PIKE
CHADDS FORD, PA 19317
PHONE 610.459.7600
FAX 610.459.7990

REV	DATE	DESCRIPTION	BY	CKD	APD

DATE PRINTED: 10/21/2025

PARK
SUBWAY/ELEVATED TRAINS
TRACTION POWER SUBSTATION REHABILITATION
ELECTRICAL
PROPOSED SINGLE LINE DIAGRAM

SCALE: AS SHOWN
SCALE FACTOR: 1:1
DATE: 08/22/2025
DRAWN BY: MM
CHECKED BY: JB
WORK ORDER NO.: 276482
SHEET NUMBER **E214**
DWG. NO.: 15 OF 18
SHT. NO.: 206 OF 452
ARCHIVE NO.:
COMPUTER FILE NO.: 17AN-E214
REV. NO.: 1

STATUS: 50% SUBMISSION

C:\PWWORKING\PITTD\D17311861\17AN-E214.DWG

LUMINAIRE SCHEDULE

TYPE	DESCRIPTION	MOUNTING	MANUFACTURER	CATALOG NO.	LAMP INFORMATION			
					TYPE	LAMP QTY	WATTS EACH	VOLTS
'A'	CEILING OR WALL MOUNTED ROUGH SERVICE FIXTURE 4000K, 80CRI, CLEAR POLYCARBONATE LENS, WIDE DISTRIBUTION, INJECTION MOLDED, IMPACT RESISTANT POLYCARBONATE HOUSING	CEILING OR WALL	LITHONIA	VAP-4000LM-PCL-WD-120-GZ10-40K-80CRI-QMB	LED	–	42	120
'AE'	CEILING OR WALL MOUNTED ROUGH SERVICE FIXTURE 4000K, 80CRI, CLEAR POLYCARBONATE LENS, WIDE DISTRIBUTION, INJECTION MOLDED, IMPACT RESISTANT POLYCARBONATE HOUSING, EMERGENCY BATTERY LED DRIVER	CEILING OR WALL	LITHONIA	VAP-4000LM-PCL-WD-120-GZ10-40K-80CRI-QMB -BZL722	LED	–	42	120
'A2'	CEILING MOUNTED ROUGH SERVICE FIXTURE 4000K, 80CRI, CLEAR POLYCARBONATE LENS, WIDE DISTRIBUTION, INJECTION MOLDED, IMPACT RESISTANT POLYCARBONATE HOUSING, HIGH LUMEN OUTPUT	CEILING	LITHONIA	VAP-12000LM-PCL-WD-120-GZ10-40K-80CRI-QMB	LED	–	107	120
'A2E'	SAME AS 'A2' WITH EMERGENCY BATTERY LED DRIVER	CEILING	LITHONIA	VAP-12000LM-PCL-WD-120-GZ10-40K-80CRI-QMB -BZL722	LED	–	107	120
'B'	DIE-CAST ALUMINUM LED WALLPACK FIXTURE, 5000K, GLASS LENS WITH WIRE GUARD, TYPE 3 MEDIUM DISTRIBUTION, INTEGRAL PHOTOCELL, BATTERY PACK	WALL	LITHONIA	TWH LED-20C-1000-50K-T3M-120-PE-TP-WG-DDBXD -ELCW	LED	20	72	120
'B1'	SIMILAR TO TYPE 'B' LUMINAIRE EXCEPT NO BATTERY PACK	WALL	LITHONIA	TWH LED-20C-1000-50K-T3M-120-PE-TP-WG-DDBXD	LED	20	72	120
'D'	DOCK LIGHT	WALL	TBD	TBD	–	1	ALL	120
'X'	THERMOPLASTIC EXIT SIGN, EMERGENCY OPERATION, NICKEL-CADMIUM BATTERY, UNIVERSAL MOUNTING KIT, SELF-DIAGNOSTICS, 90-MINUTE CAPACITY FOR EMERGENCY LAMPS	UNIVERSAL	LITHONIA	LQM S W 3 R 120/277 EL N SD	LED	–	.92	120

50% SUBMISSION
NOT FOR CONSTRUCTION

SOUTHEASTERN PENNSYLVANIA TRANSPORTATION AUTHORITY
EM&C DIVISION
1234 MARKET ST, 13TH FL,
PHILADELPHIA, PA 19107

CHIEF ENGINEER - EM&C
CHIEF ENGINEERING OFFICER - B&B
CHIEF RAIL TRANSIT OFFICER
SYSTEM SAFETY
DIRECTOR OF ENGINEERING - B&B
MANAGER - ARCH / ENGINEERING
PROJECT MANAGER

HDR Engineering, Inc.
Philadelphia, PA

ARORA ENGINEERS
61 WILMINGTON WEST CHESTER PIKE
CHADDS FORD, PA 19317
PHONE 610.485.3600
FAX 610.485.7900

REV	DATE	DESCRIPTION	BY	CK'D	APP'D

PARK
SUBWAY/ELEVATED TRAINS
TRACTION POWER SUBSTATION REHABILITATION
ELECTRICAL
ELECTRICAL SCHEDULES

SCALE: AS SHOWN	SCALE FACTOR: 1:1
DATE: 08/22/2025	DRAWN BY: MM / CHECKED BY: JB
WORK ORDER NO.: 276482	
SHEET NUMBER: **E215**	
DWG. NO.: 16 OF 18	
SHT. NO.: 207 OF 452	
ARCHIVE NO.:	
COMPUTER FILE NO.: 17AN-E215	REV. NO.: ---

DATE PRINTED: 10/21/2025
STATUS: 50% SUBMISSION
C:\PW\WORKING\PITTD173186\17AN-E215.DWG

PANEL SCHEDULE

PANEL: PP1 | INTERRUPTING RATING: 22 KAIC | MOUNTING: SURFACE
VOLTAGE: 208Y/120V | PHASE: 3 | WIRE: 4 | BUS AMPS: 400A | MAIN: 400A MCB
NEMA 3R | NEUTRAL: 100% | COPPER GROUND BUS | LOCATION:

CIRCUIT	DESCRIPTION	WIRE	POLES	BKR SIZE	VA	VA / PHASE A	VA / PHASE B	VA / PHASE C	VA	BKR SIZE	POLES	WIRE	DESCRIPTION	CIRCUIT
1	–	–	–	–	0	0			0	–	–	–	–	2
3	–	–	–	–	0		0		0	–	–	–	–	4
5	–	–	–	–	0			0	0	–	–	–	–	6
7	–	–	–	–	0	0			0	–	–	–	–	8
9	–	–	–	–	0		0		0	–	–	–	–	10
11	–	–	–	–	0			0	0	–	–	–	–	12
13	–	–	–	–	0	0			0	–	–	–	–	14
15	–	–	–	–	0		0		0	–	–	–	–	16
17	–	–	–	–	0			0	0	–	–	–	–	18
19	–	–	–	–	0	0			0	–	–	–	–	20
21	–	–	–	–	0		0		0	–	–	–	–	22
23	–	–	–	–	0			0	0	–	–	–	–	24
25	–	–	–	–	0	0			0	–	–	–	–	26
27	–	–	–	–	0		0		0	–	–	–	–	28
29	–	–	–	–	0			0	0	–	–	–	–	30
31	–	–	–	–	0	0			0	–	–	–	–	32
33	–	–	–	–	0		0		0	–	–	–	–	34
35	–	–	–	–	0			0	0	–	–	–	–	36
37	–	–	–	–	0	0			0	–	–	–	–	38
39	–	–	–	–	0		0		0	–	–	–	–	40
41	–	–	–	–	0			0	0	–	–	–	–	42

NOTES:

TOTALS: 0 | 0 | 0
0 VA
0.00 AMPS

PANEL SCHEDULE

PANEL: PP2 | INTERRUPTING RATING: 22 KAIC | MOUNTING: SURFACE
VOLTAGE: 208Y/120V | PHASE: 3 | WIRE: 4 | BUS AMPS: 400A | MAIN: 400A MCB
NEMA 3R | NEUTRAL: 100% | COPPER GROUND BUS | LOCATION:

CIRCUIT	DESCRIPTION	WIRE	POLES	BKR SIZE	VA	VA / PHASE A	VA / PHASE B	VA / PHASE C	VA	BKR SIZE	POLES	WIRE	DESCRIPTION	CIRCUIT
1	–	–	–	–	0	0			0	–	–	–	–	2
3	–	–	–	–	0		0		0	–	–	–	–	4
5	–	–	–	–	0			0	0	–	–	–	–	6
7	–	–	–	–	0	0			0	–	–	–	–	8
9	–	–	–	–	0		0		0	–	–	–	–	10
11	–	–	–	–	0			0	0	–	–	–	–	12
13	–	–	–	–	0	0			0	–	–	–	–	14
15	–	–	–	–	0		0		0	–	–	–	–	16
17	–	–	–	–	0			0	0	–	–	–	–	18
19	–	–	–	–	0	0			0	–	–	–	–	20
21	–	–	–	–	0		0		0	–	–	–	–	22
23	–	–	–	–	0			0	0	–	–	–	–	24
25	–	–	–	–	0	0			0	–	–	–	–	26
27	–	–	–	–	0		0		0	–	–	–	–	28
29	–	–	–	–	0			0	0	–	–	–	–	30
31	–	–	–	–	0	0			0	–	–	–	–	32
33	–	–	–	–	0		0		0	–	–	–	–	34
35	–	–	–	–	0			0	0	–	–	–	–	36
37	–	–	–	–	0	0			0	–	–	–	–	38
39	–	–	–	–	0		0		0	–	–	–	–	40
41	–	–	–	–	0			0	0	–	–	–	–	42

NOTES:

TOTALS: 0 | 0 | 0
0 VA
0.00 AMPS

PANEL SCHEDULE

PANEL: LP1 | INTERRUPTING RATING: 22 KAIC | MOUNTING: SURFACE
VOLTAGE: 208Y/120V | PHASE: 3 | WIRE: 4 | BUS AMPS: 225A | MAIN: 125A MCB
NEMA 3R | NEUTRAL: 100% | COPPER GROUND BUS | LOCATION:

CIRCUIT	DESCRIPTION	WIRE	POLES	BKR SIZE	VA	VA / PHASE A	VA / PHASE B	VA / PHASE C	VA	BKR SIZE	POLES	WIRE	DESCRIPTION	CIRCUIT
1	–	–	–	–	0	0			0	–	–	–	–	2
3	–	–	–	–	0		0		0	–	–	–	–	4
5	–	–	–	–	0			0	0	–	–	–	–	6
7	–	–	–	–	0	0			0	–	–	–	–	8
9	–	–	–	–	0		0		0	–	–	–	–	10
11	–	–	–	–	0			0	0	–	–	–	–	12
13	–	–	–	–	0	0			0	–	–	–	–	14
15	–	–	–	–	0		0		0	–	–	–	–	16
17	–	–	–	–	0			0	0	–	–	–	–	18
19	–	–	–	–	0	0			0	–	–	–	–	20
21	–	–	–	–	0		0		0	–	–	–	–	22
23	–	–	–	–	0			0	0	–	–	–	–	24
25	–	–	–	–	0	0			0	–	–	–	–	26
27	–	–	–	–	0		0		0	–	–	–	–	28
29	–	–	–	–	0			0	0	–	–	–	–	30
31	–	–	–	–	0	0			0	–	–	–	–	32
33	–	–	–	–	0		0		0	–	–	–	–	34
35	–	–	–	–	0			0	0	–	–	–	–	36
37	–	–	–	–	0	0			0	–	–	–	–	38
39	–	–	–	–	0		0		0	–	–	–	–	40
41	–	–	–	–	0			0	0	–	–	–	–	42

NOTES:

TOTALS: 0 | 0 | 0
0 VA
0.00 AMPS

PANEL SCHEDULE

PANEL: LP2 | INTERRUPTING RATING: 22 KAIC | MOUNTING: SURFACE
VOLTAGE: 208Y/120V | PHASE: 3 | WIRE: 4 | BUS AMPS: 225A | MAIN: 125A MCB
NEMA 3R | NEUTRAL: 100% | COPPER GROUND BUS | LOCATION:

CIRCUIT	DESCRIPTION	WIRE	POLES	BKR SIZE	VA	VA / PHASE A	VA / PHASE B	VA / PHASE C	VA	BKR SIZE	POLES	WIRE	DESCRIPTION	CIRCUIT
1	–	–	–	–	0	0			0	–	–	–	–	2
3	–	–	–	–	0		0		0	–	–	–	–	4
5	–	–	–	–	0			0	0	–	–	–	–	6
7	–	–	–	–	0	0			0	–	–	–	–	8
9	–	–	–	–	0		0		0	–	–	–	–	10
11	–	–	–	–	0			0	0	–	–	–	–	12
13	–	–	–	–	0	0			0	–	–	–	–	14
15	–	–	–	–	0		0		0	–	–	–	–	16
17	–	–	–	–	0			0	0	–	–	–	–	18
19	–	–	–	–	0	0			0	–	–	–	–	20
21	–	–	–	–	0		0		0	–	–	–	–	22
23	–	–	–	–	0			0	0	–	–	–	–	24
25	–	–	–	–	0	0			0	–	–	–	–	26
27	–	–	–	–	0		0		0	–	–	–	–	28
29	–	–	–	–	0			0	0	–	–	–	–	30
31	–	–	–	–	0	0			0	–	–	–	–	32
33	–	–	–	–	0		0		0	–	–	–	–	34
35	–	–	–	–	0			0	0	–	–	–	–	36
37	–	–	–	–	0	0			0	–	–	–	–	38
39	–	–	–	–	0		0		0	–	–	–	–	40
41	–	–	–	–	0			0	0	–	–	–	–	42

NOTES:

TOTALS: 0 | 0 | 0
0 VA
0.00 AMPS

50% SUBMISSION
NOT FOR CONSTRUCTION

SOUTHEASTERN PENNSYLVANIA TRANSPORTATION AUTHORITY
EM&C DIVISION
1234 MARKET ST, 13TH FL.
PHILADELPHIA, PA 19107

CHIEF ENGINEER - EM&C
CHIEF ENGINEERING OFFICER - B&B
CHIEF RAIL TRANSIT OFFICER
SYSTEM SAFETY
DIRECTOR OF ENGINEERING - B&B
MANAGER - ARCH / ENGINEERING
PROJECT MANAGER

HDR
HDR Engineering, Inc.
Philadelphia, PA

ARORA
ARORA ENGINEERS
65 WILMINGTON-WEST CHESTER PIKE
CHADDS FORD, PA 19317
PHONE 610.485.2600
FAX 610.485.7900

REV	DATE	DESCRIPTION	BY	CK'D	APP'D

DATE PRINTED: 10/21/2025

PARK
SUBWAY/ELEVATED TRAINS
TRACTION POWER SUBSTATION REHABILITATION
ELECTRICAL
PANEL SCHEDULES - SHEET 1

SCALE: AS SHOWN | SCALE FACTOR: 1:1
DATE: 08/22/2025 | DRAWN BY: MM | CHECKED BY: JB
WORK ORDER NO.: 276482
SHEET NUMBER: **E216**
DWG. NO.: 17 OF 18
SHT. NO.: 208 OF 452
ARCHIVE NO.:
COMPUTER FILE NO.: 17AN-E216 | REV. NO.: ---

STATUS: 50% SUBMISSION

C:\PW\WORKING\PITTD173186\17AN-E216.DWG

PANEL SCHEDULE

PANEL: PP1A | INTERRUPTING RATING: 22 KAIC | MOUNTING: SURFACE

VOLTAGE: 208Y/120V | PHASE: 3 | WIRE: 4 | BUS AMPS: 100A | MAIN: 100A MCB

NEMA 3R | NEUTRAL: 100% | COPPER GROUND BUS | LOCATION:

CIRCUIT	DESCRIPTION	WIRE	POLES	BKR SIZE	VA	VA / PHASE A	VA / PHASE B	VA / PHASE C	VA	BKR SIZE	POLES	WIRE	DESCRIPTION	CIRCUIT
1	–	–	–	–	0	0			0	–	–	–	–	2
3	–	–	–	–	0		0		0	–	–	–	–	4
5	–	–	–	–	0			0	0	–	–	–	–	6
7	–	–	–	–	0	0			0	–	–	–	–	8
9	–	–	–	–	0		0		0	–	–	–	–	10
11	–	–	–	–	0			0	0	–	–	–	–	12
13	–	–	–	–	0	0			0	–	–	–	–	14
15	–	–	–	–	0		0		0	–	–	–	–	16
17	–	–	–	–	0			0	0	–	–	–	–	18
19	–	–	–	–	0	0			0	–	–	–	–	20
21	–	–	–	–	0		0		0	–	–	–	–	22
23	–	–	–	–	0			0	0	–	–	–	–	24
25	–	–	–	–	0	0			0	–	–	–	–	26
27	–	–	–	–	0		0		0	–	–	–	–	28
29	–	–	–	–	0			0	0	–	–	–	–	30
31	–	–	–	–	0	0			0	–	–	–	–	32
33	–	–	–	–	0		0		0	–	–	–	–	34
35	–	–	–	–	0			0	0	–	–	–	–	36
37	–	–	–	–	0	0			0	–	–	–	–	38
39	–	–	–	–	0		0		0	–	–	–	–	40
41	–	–	–	–	0			0	0	–	–	–	–	42
						TOTALS								
						0	0	0						
						0 VA								

NOTES:

0.00 AMPS

50% SUBMISSION
NOT FOR CONSTRUCTION

C:\PW\WORKING\PITTID173186\17AN-E217.DWG

SOUTHEASTERN PENNSYLVANIA TRANSPORTATION AUTHORITY
EM&C DIVISION
1234 MARKET ST, 13TH FL.
PHILADELPHIA, PA 19107

CHIEF ENGINEER - EM&C
CHIEF ENGINEERING OFFICER - B&B
CHIEF RAIL TRANSIT OFFICER
SYSTEM SAFETY
DIRECTOR OF ENGINEERING - B&B
MANAGER - ARCH / ENGINEERING
PROJECT MANAGER

HDR Engineering, Inc.
Philadelphia, PA

ARORA ENGINEERS
45 WILMINGTON-WEST CHESTER PIKE
CHADDS FORD, PA 19317
PHONE 610.459.2600
FAX 610.459.2900

REV	DATE	DESCRIPTION	BY	CKD	APD

PARK
SUBWAY/ELEVATED TRAINS
TRACTION POWER SUBSTATION REHABILITATION
ELECTRICAL
PANEL SCHEDULES - SHEET 2

SCALE: AS SHOWN | SCALE FACTOR: 1:1
DATE: 08/22/2025 | DRAWN BY: MM | CHECKED BY: JB
WORK ORDER NO.: 276482
SHEET NUMBER: **E217**
DWG. NO.: 18 OF 18
SHT. NO.: 209 OF 452
ARCHIVE NO.:
COMPUTER FILE NO.: 17AN-E217
REV. NO.: 1

DATE PRINTED: 10/21/2025
STATUS: 50% SUBMISSION

LEGEND-SYMBOLS:

SYMBOL	DESCRIPTION
— — — — —	DEMOLITION WORK
———	EXISTING WORK
———	NEW WORK
CM	CONTROL MODULE
MM	MONITORING MODULE
	SMOKE DETECTOR
	HEAT DETECTOR
FACP	FIRE ALARM CONTROL PANEL
F	MANUAL PULLSTATION W/ PROTECTIVE COVER
(##)	FIRE ALARM WALL MOUNTED STROBE, (##) DENOTES CANDELA
(G) (##) (WP)	FIRE ALARM WALL MOUNTED HORN/STROBE, (##) DENOTES CANDELA (G) DENOTES PROTECTIVE GUARD (WP) DENOTES WEATHERPROOF ENCLOSURE

***HEAVY LINEWEIGHTS SHALL REPRESENT NEW WORK/NEW DEVICES.**

*LIGHT/LIGHTER LINEWEIGHTS SHALL REPRESENT EXISTING DEVICES.

ABBREVIATIONS:

A.F.F.	ABOVE FINISHED FLOOR	NEMA	NATIONAL ELECTRICAL MANUFACTURERS ASSOCIATION
AHJ	AUTHORITY HAVING JURISDICTION		
AWG	AMERICAN WIRE GAUGE	NFPA	NATIONAL FIRE PROTECTION ASSOCIATION
CD	CANDELA		
CKT	CIRCUIT	RGS	RIGID GALVANIZED STEEL
CM	CONTROL MODULE	SCADA	SUPERVISORY CONTROL AND DATA ACQUISITION
EOL	END OF LINE		
FACP	FIRE ALARM CONTROL PANEL	SLC	SIGNALING LINE CIRCUIT
FMC	FLEXIBLE METAL CONDUIT	SPK	SPEAKER CIRCUIT
HVAC	HEATING, VENTILATION, AND AIR CONDITIONING	SUP	SUPERVISORY
		TBL	TROUBLE
IBC	INTERNATIONAL BUILDING CODE	TS	TAMPER SWITCH
		VAC	VOLTAGE – ALTERNATING CURRENT
IDC	INITIATING DEVICE CIRCUIT		
G	PROTECTIVE GUARD		
JB	JUNCTION BOX	VDC	VOLTAGE – DIRECT CURRENT
LFMC	LIQUID TIGHT FLEXIBLE METAL CONDUIT	WESS	WAYSIDE ENERGY STORAGE SYSTEM
MIN	MINIMUM		
MM	MONITORING MODULE	WP	WEATHERPROOF
NAC	NOTIFICATION APPLIANCE CIRCUIT		
NEC	NATIONAL ELECTRICAL CODE		

DEMOLITION NOTES:

1. THE CONTRACTOR SHALL BECOME FAMILIAR WITH EXISTING CONDITIONS AFFECTING THIS PROJECT AND COORDINATE WITH ALL OTHER TRADES.
2. DRAWINGS ARE DIAGRAMMATIC AND INDICATE THE GENERAL CAPACITIES AND LOCATIONS OF EQUIPMENT TO BE REMOVED. THE CONTRACTOR SHALL BE RESPONSIBLE FOR VISITING THE SITE TO DETERMINE ACTUAL PHYSICAL SIZE, CAPACITIES AND LOCATIONS OF EXISTING EQUIPMENT TO BE REMOVED.
3. THE CONTRACTOR SHALL OBTAIN ALL REQUIRED PERMITS, COORDINATE ALL REQUIRED EQUIPMENT AND SYSTEMS SHUTDOWN WITH SEPTA, AND PROVIDE SEPTA TWO (2) WEEKS NOTICE OF SAME.
4. THE CONTRACTOR SHALL BE RESPONSIBLE FOR ALL CUTTING AND PATCHING AS IT MAY APPLY TO THE AREAS OF DEMOLITION, OR MAY BE AFFECTED BY PIPE, DUCTWORK, EQUIPMENT AND APPURTENANCES. PATCH AND REPAIR SHALL MATCH EXISTING BUILDING STRUCTURE.
5. COORDINATE DEMOLITION WORK WITH ALL OTHER TRADES. STAGE WORK IN CONJUNCTION WITH OTHER TRADE STAGING AND STAGING DRAWINGS.
6. THE DEMOLITION/REMOVAL OF ITEMS BY THE CONTRACTOR SHALL BE AS FOLLOWS, UNLESS SPECIFICALLY NOTED OTHERWISE, ITEMS SHOWN IN HEAVY LINEWEIGHT DASHED LINES ON DEMOLITION DRAWINGS ARE EXISTING ITEMS TO BE REMOVED; LIGHT LINEWEIGHT ITEMS ARE EXISTING ITEMS TO REMAIN.

DEMOLITION NOTES (CONT):

7. DEMOLISHED EQUIPMENT/SERVICES WILL BE REMOVED BACK TO THE LIMIT OF DEMOLITION AS INDICATED ON DRAWINGS, OR TO THE NEAREST HEADER OR JUNCTION. PROVIDE CAPS AS NECESSARY.
8. THE CONTRACTOR SHALL FIELD VERIFY OTHER EQUIPMENT/UTILITIES NOT ASSOCIATED WITH THIS WORK BUT LYING WITHIN THE WORK AREA, AND WILL NOT DISTURB THAT EQUIPMENT/UTILITIES. THESE EQUIPMENT/UTILITIES SHALL BE PROTECTED SO THAT THE SERVICE IS NOT INTERRUPTED. THE CONTRACTOR SHALL REPAIR ANY DAMAGE DONE TO THE EQUIPMENT/UTILITIES IN PERFORMANCE OF THE WORK.
9. ALL ITEMS BEING REMOVED SHALL BE TURNED OVER TO SEPTA OR REMOVED FROM SITE AS DIRECTED, UNLESS OTHERWISE DESIGNATED.
10. THE CONTRACTOR SHALL KEEP WORK AREA CLEAN, ORDERLY, AND WORKMAN LIKE, AND REMOVE ALL DEMOLISHED TRASH/RUBBLE/CONSTRUCTION DEBRIS FROM SITE DAILY.
11. UNLESS OTHERWISE INDICATED, DEMOLITION WASTE BECOMES PROPERTY OF THE CONTRACTOR.
12. HISTORIC ITEMS, RELICS, ANTIQUES, AND SIMILAR OBJECTS INCLUDING, BUT NOT LIMITED TO, CORNERSTONES AND THEIR CONTENTS, COMMEMORATIVE PLAQUES AND TABLETS, AND OTHER ITEMS OF INTEREST OR VALUE TO SEPTA THAT MAY BE UNCOVERED DURING DEMOLITION REMAIN THE PROPERTY OF SEPTA. CAREFULLY SALVAGE IN A MANNER TO PREVENT DAMAGE AND PROMPTLY RETURN TO SEPTA.
13. NOTIFY THE SEPTA PROJECT MANAGER OF DISCREPANCIES BETWEEN EXISTING CONDITIONS AND DRAWINGS BEFORE PROCEEDING WITH SELECTIVE DEMOLITION.
14. IF SUSPECTED HAZARDOUS MATERIALS ARE ENCOUNTERED, DO NOT DISTURB; IMMEDIATELY NOTIFY THE SEPTA PROJECT MANAGER.
15. REVIEW RECORD DOCUMENTS OF EXISTING CONSTRUCTION PROVIDED BY SEPTA. SEPTA DOES NOT GUARANTEE THAT EXISTING CONDITIONS ARE THE SAME AS THOSE INDICATED IN RECORD DOCUMENTS.
16. WHEN UNANTICIPATED ELEMENTS THAT CONFLICT WITH INTENDED FUNCTION OR DESIGN ARE ENCOUNTERED, INVESTIGATE AND MEASURE THE NATURE AND EXTEND OF CONFLICT. PROMPTLY SUBMIT A WRITTEN REPORT TO THE SEPTA PROJECT MANAGER.
17. COMPLY WITH HAULING AND DISPOSAL REGULATIONS OF AUTHORITIES HAVING JURISDICTION.
18. PROCEED WITH SELECTIVE DEMOLITION SYSTEMATICALLY, FROM HIGHER TO LOWER LEVEL. COMPLETE SELECTIVE DEMOLITION OPERATIONS ABOVE EACH FLOOR OR TIER BEFORE DISTURBING SUPPORTING MEMBERS ON THE NEXT LOWER LEVEL.
19. NEATLY CUT OPENINGS AND HOLES PLUMB, SQUARE AND TRUE TO DIMENSIONS REQUIRED. USE CUTTING METHODS LEAST LIKELY TO DAMAGE CONSTRUCTION TO REMAIN OR ADJOINING CONSTRUCTION.
20. USE HAND TOOLS OR SMALL POWER TOOLS DESIGNED FOR SAWING OR GRINDING, NOT HAMMERING AND CHOPPING, TO MINIMIZE DISTURBANCE OF ADJACENT SURFACES. TEMPORARILY COVER OPENINGS TO REMAIN. CUT OR DRILL FROM THE EXPOSED OR FINISHED SIDE INTO CONCEALED SURFACES TO AVOID MARRING EXISTING FINISHED SURFACES.

GENERAL NOTES:

1. ALL WORK INDICATED ON THESE DRAWINGS IS BY THE CONTRACTOR, UNLESS OTHERWISE NOTED.
2. EXISTING CONDITIONS SHOWN ARE BASED ON HISTORICAL DOCUMENTS, CIVIL SURVEYS AND SITE OBSERVATIONS. ALL DIMENSIONS AND CONDITIONS ARE TO BE VERIFIED IN THE FIELD.
3. INSTALL ALL EQUIPMENT WITH ADEQUATE CLEARANCES FOR MAINTENANCE AND SERVICING AND IN ACCORDANCE WITH THE MANUFACTURER'S WRITTEN INSTRUCTIONS AND APPLICABLE CODES.

GENERAL NOTES (CONT):

4. FIRE ALARM DEVICES SHALL BE ACCESSIBLE TO ALLOW PERIODIC INSPECTION, CLEANING AND MAINTENANCE. A FIRE ALARM DEVICE SHALL BE CONSIDERED ACCESSIBLE IF IT CAN BE READILY AND SAFELY ACCESSED WITH THE USE OF A LADDER OR A BOOM LIFT.
5. OBTAIN AND PAY FOR ALL PERMITS AND PAY FOR ALL COSTS OF MATERIALS. HANDLE, STORE AND PROTECT ALL EQUIPMENT TO PREVENT DAMAGE BEFORE AND DURING INSTALLATION IN ACCORDANCE WITH THE MANUFACTURER'S INSTRUCTIONS. PROTECT THE WORK SITE AND ALL WORK AGAINST ANY DAMAGE INCLUDING BUT NOT LIMITED TO WATER, DUST, HEAT, FREEZING ETC. UNTIL FINAL COMPLETION AND ACCEPTANCE BY SEPTA.
6. REFER TO SPECIFICATIONS FOR MATERIALS TO BE USED AND METHODS OF INSTALLATION.
7. SUBMIT EQUIPMENT TAG–OUT METHODS AND PROCEDURES TO THE SEPTA PROJECT MANAGER FOR REVIEW AND APPROVAL. WHERE UTILITIES AND/OR SERVICES REQUIRE SHUTDOWN FOR THE WORK TO BE PERFORMED, NOTIFY THE SEPTA PROJECT MANAGER, IN WRITING, A MINIMUM OF TWO (2) WEEKS PRIOR TO THE REQUESTED SHUTDOWN.
8. STORAGE OF MATERIALS AND/OR EQUIPMENT IS NOT PERMITTED OTHER THAN WITHIN THE LIMITS OF THE STAGING AREA OR CONFINES OF THE PROJECT WORK AREA AND AS APPROVED BY THE SEPTA PROJECT MANAGER.
9. PERFORM ALL WORK IN A NEAT AND WORKMANLIKE MANNER TO THE SATISFACTION OF SEPTA.
10. REMOVE ALL CONSTRUCTION DEBRIS IN ACCORDANCE WITH APPROVED CONSTRUCTION WASTE MANAGEMENT PLAN.
11. CONCEAL CONDUIT OR CABLE EXTENSIONS TO THE GREATEST EXTENT PRACTICABLE. KEEP SURFACE MOUNTED DEVICES, BOXES, AND EXPOSED SURFACE MOUNTED METAL RACEWAYS TO A MINIMUM AND ONLY AS APPROVED IN ADVANCED BY THE SEPTA PROJECT MANAGER. INSTALL EXPOSED HORIZONTAL CONDUIT RUNS SUPPORTED BY OVERHEAD STRUCTURE OR SUPPORTED HIGH ON WALLS.
12. KEEP A COPY OF THE CURRENT SET OF CONTRACT DOCUMENTS WITH THE CONTRACTOR AS–BUILT INFORMATION AT THE JOB SITE AT ALL TIMES.
13. REVIEW ALL PROJECT DOCUMENTS FOR A THOROUGH UNDERSTANDING OF PROJECT AND ANY CROSS REFERENCING OF WORK. REVIEW ALL PROJECT REQUIREMENTS PRIOR TO BIDDING. REPORT ANY DISCREPANCIES BETWEEN DOCUMENTS TO THE SEPTA PROJECT MANAGER PRIOR TO BIDDING.
14. VERIFY ALL DIMENSIONS IN THE FIELD AND REPORT DISCREPANCIES, IF ANY, TO THE SEPTA PROJECT MANAGER FOR CLARIFICATION PRIOR TO STARTING ANY WORK.
15. COORDINATE, PROVIDE AND INSTALL RACEWAY, BACKBOXES, JUNCTION BOXES, PULL BOXES, PULL STRING AND CONDUIT REQUIRED.
16. RESTORE ALL EXISTING WORK DISTURBED BY THE CONSTRUCTION TO ITS PREVIOUS EXISTING CONDITION OR BETTER.
17. PRIOR TO DELIVERY OF ANY MATERIALS TO THE SITE, PROVIDE SAFETY DATA SHEETS FOR ALL REQUIRED ITEMS AND MATERIALS, USED IN THE WORK, TO THE CONTRACTOR.
18. PATCH AND REPAIR ALL OPENINGS LEFT IN EXISTING SURFACES BY THE REMOVAL OF EXISTING SURFACE AND OR SEMI–RECESSED BOXES OR RACEWAYS AND FINISH SUCH AREAS TO MATCH ADJACENT SURFACES.
19. COMPLY WITH ALL SEPTA SAFETY STANDARDS AND INCLUDE ALL COSTS TO TRAIN AND QUALIFY THEIR PERSONNEL IN SEPTA SAFETY STANDARDS.
20. REVIEW POTENTIAL ITEMS FOR SALVAGE AND RETENTION BY SEPTA WITH THE SEPTA PROJECT MANAGER PRIOR TO REMOVAL TO DETERMINE DISPOSITION.
21. COORDINATE LOCATIONS OF EXPANSION JOINTS WITH STRUCTURAL DRAWINGS. FURNISH AND INSTALL UL LISTED EXPANSION JOINT FITTINGS FOR CONDUITS CROSSING EXPANSION JOINTS.
22. SUPPORT ALL CONDUCTORS IN VERTICAL RACEWAYS WITH CONDUIT RISER CABLE GRIPS.
23. COORDINATE INSTALLATION OF FIRE ALARM DEVICES WITH OTHER TRADES.

GENERAL NOTES (CONT):

24. FIRE ALARM DEVICES SHALL NOT BE INSTALLED WHERE THEY CANNOT BE MAINTAINED WITHOUT.
    A. SHUTTING DOWN POWER IN THE TPSS, OR
    B. ENDANGERING A MAINTENANCE TECHNICIAN.
25. CEILING MOUNTED SMOKE DETECTORS TO BE MOUNTED TO UNDERSIDE OF STEEL BEAMS, IF APPLICABLE.
26. THE DEMOLITION OF THE EXISTING FIRE ALARM SYSTEM WILL NOT COMMENCE UNTIL THE NEW FIRE ALARM SYSTEM IS FULLY INSTALLED AND ACCEPTED BY THE AUTHORITY HAVING JURISDICTION AND SEPTA.
27. SPLICING OF WIRES AND USE OF WIRE NUTS IS NOT PERMITTED ANYWHERE IN THE FIRE ALARM SYSTEM.

FIRE ALARM NOTES:

1. THE FIRE ALARM WORK IS BY THE CONTRACTOR AND FIRE ALARM SUB–CONTRACTOR, UNLESS OTHERWISE NOTED.
2. THE FIRE ALARM SYSTEM SCOPE OF WORK INCLUDES THE INSTALLATION AND TESTING OF A NEW FIRE ALARM CONTROL SYSTEM AND INVOLVES THE FOLLOWING:
   A. INSTALLATION OF A NEW FIRE ALARM CONTROL PANEL AND ASSOCIATED WIRING, BACK BOXES, ETC. AND ALL ASSOCIATED APPURTENANCES.
   B. INSTALLATION OF PULL STATIONS AS NEEDED.
   C. INSTALLATION OF HORN STROBES/STROBES TO INCLUDE A BOOSTER POWER SUPPLY AS NEEDED.
   D. INSTALLATION OF HEAT/SMOKE DETECTORS AS NEEDED.
   E. THE DEMOLITION SHALL OCCUR AT THE CONCLUSION OF THE FINAL TESTING AND ACCEPTANCE OF THE NEW FIRE ALARM SYSTEM.
3. THE PROJECT SHALL BE IN ACCORDANCE WITH THE FOLLOWING CODES, STANDARDS, TESTING LABORATORIES AND UNDERWRITING AGENCY:
   A. 2010 CITY OF PHILADELPHIA BUILDING CODE (INTERNATIONAL BUILDING CODE 2009 AS AMENDED).
   B. 2010 CITY OF PHILADELPHIA FIRE CODE.
   C. 2010 CITY OF PHILADELPHIA MECHANICAL CODE.
   D. NFPA 70, NATIONAL ELECTRIC CODE, CURRENT EDITION.
   E. NFPA 72, NATIONAL FIRE ALARM CODE, CURRENT EDITION.
   F. ADAAG, ADA ACCESSIBILITY GUIDELINES FOR BUILDINGS AND FACILITIES, CURRENT EDITION.
   G. ANSI/ASME A17.1, SAFETY CODE FOR ELEVATORS AND ESCALATORS, CURRENT EDITION.
   H. UL LISTED PRODUCTS FOR FIRE ALARM USE CONSIDERING ENVIRONMENTAL CONDITIONS.
   I. FM GLOBAL APPROVED PRODUCTS.
   J. PROJECT SPECIFICATIONS.
   K. SEPTA REQUIREMENTS.
4. THIS DESIGN PACKAGE IS NOT MEANT TO PROVIDE FINAL QUANTITIES AS THEY ARE DIAGRAMMATICAL AND SHOW THE INTENT OF SEPTA'S REQUEST FOR A FULLY INSTALLED AND FULLY OPERATIONAL SYSTEM. ALL FINAL QUANTITIES OF ALL REQUIRED PARTS AND PIECES TO PROVIDE SAID COMPLETE SYSTEM ARE SOLELY THE RESPONSIBILITY OF THE CONTRACTOR UNDER THIS CONTRACT.
   A. FURNISH AND INSTALL ALL CONDUITS, FITTINGS, OUTLETS, JUNCTION BOXES, SUPPORTS, HANGERS, WIRE AND CABLE AND OTHER ITEMS INCIDENTAL TO AND/OR REQUIRED TO COMPLETE THE INSTALLATION, IN ACCORDANCE WITH THE INTENT OF THE DRAWINGS AND SPECIFICATIONS. THIS SHALL INCLUDE WIRE AND CONDUIT REQUIRED TO OPERATE BOTH NEW AND EXISTING EQUIPMENT CIRCUITS DURING EACH STAGE OF THE WORK.
   B. FINAL QUANTITIES OF FIRE ALARM CONTROL PANEL CABINETS, TO INCLUDE TRANSPONDERS, ENCLOSURES AND BOOSTER PANELS SHALL BE COORDINATED.

FIRE ALARM NOTES (CONT):

   C. FOR ANY EXPOSED EQUIPMENT AND RACEWAYS, SUBMIT PROPOSED LOCATIONS TO THE SEPTA PROJECT MANAGER IN ADVANCE.
   D. ALL 120V AC CIRCUITS REQUIRED TO POWER ALL PANELS AND OR ENCLOSURES AS COORDINATED ABOVE SHALL BE INCLUDED IN THIS SCOPE OF WORK. SUBMIT THIS INFORMATION IN ITS ENTIRETY TO THE SEPTA PROJECT MANAGER AS PART OF THE SHOP DRAWING PACKAGE.
   E. FAILURE TO COORDINATE AND INCLUDE ANY PART OR PIECE REQUIRED TO PROVIDE AN ENTIRELY COMPLETE AND FUNCTIONING FIRE ALARM SYSTEM PRIOR TO BID SHALL NOT BE SUBJECT TO A CHANGE ORDER, AND SHALL BE BORNE SOLELY OF THIS CONTRACT.
5. SEPTA HAS THE RIGHT TO SALVAGE ANY EQUIPMENT TO BE REMOVED. ANY EQUIPMENT NOT SALVAGED SHALL BE REMOVED AND DISPOSED OF, OFF SITE PREMISES BY THE CONTRACTOR. THE CONTRACTOR SHALL MAKE PROVISIONS TO RETAIN ANY AND ALL REMOVED EQUIPMENT AS REQUESTED BY THE SEPTA PROJECT MANAGER.
6. NOTIFY SEPTA SYSTEM SAFETY FIRE MARSHALL OF ALL FIRE ALARM SHUTDOWNS, AND BEING PLACED IN TEST MODE WITHIN SEVEN (7) DAYS OF OPERATION.
7. INITIATING DEVICE AND ANNUNCIATOR DATA CIRCUIT WIRING SHALL BE 2C #16 TYPE FPLR UNLESS OTHERWISE INDICATED.
8. NOTIFICATION CIRCUIT AND AUX POWER 24V DC WIRING SHALL BE 2C #14 TYPE FPLR UNLESS OTHERWISE INDICATED.
9. MOUNT ALL DEVICES IN COMPLIANCE WITH PHILADELPHIA BUILDING CODE, NFPA CODES AND STANDARDS. REFER TO TYPICAL MOUNTING HEIGHT DETAIL ON THE FIRE ALARM DETAIL DRAWING AND COORDINATE WITH ARCHITECTURAL DRAWINGS.
10. OBTAIN APPROVAL FROM THE SEPTA PROJECT MANAGER FOR ALL LOCATIONS IN ADVANCE OF LAYOUT.
11. SHOW ACTUAL DETAILED RISER WITH DEVICE ADDRESSING AND NOMENCLATURE ON SHOP DRAWINGS.
12. JUNCTION AND PULL BOXES ARE NOT NECESSARILY ALL INDICATED. PROVIDE JUNCTION BOXES AND PULL BOXES WHERE MANDATED BY THE NEC, AND AS REQUIRED TO FACILITATE EASE OF INSTALLATION. PROVIDE NEMA TYPE 4X STAINLESS STEEL JUNCTION BOXES AND SIZE IN ACCORDANCE WITH ARTICLE 314 OF THE NEC. SUBMIT PROPOSED LOCATIONS TO THE SEPTA PROJECT MANAGER FOR APPROVAL.
13. ALL INTERIOR AND EXTERIOR RACEWAY SHALL BE RGS CONDUIT. UTILIZE FMC AND LFMC, WHERE PERMITTED IN THE SPECIFICATIONS IN LIMITED LENGTHS NO MORE THAN 6'–0". USE MINIMUM CONDUIT SIZE OF 3/4", UNLESS OTHERWISE NOTED. DO NOT EXCEED CONDUIT FILL RATIO PER THE NEC.
14. COORDINATE CONDUIT IN EXPOSED AREAS WITH EXISTING STRUCTURES, CABLE TRAYS AND PIPING; OBTAIN APPROVAL FROM THE SEPTA PROJECT MANAGER OF CONDUIT LAYOUT AND PATH PRIOR TO INSTALLATION.
15. LABEL FIRE ALARM CONDUITS PER THE PROJECT SPECIFICATIONS. ALL "EXPOSED" FIRE ALARM CONDUIT SHALL BE PAINTED TO MATCH EXISTING FINISHES. PAINT SAMPLES SHALL BE SUBMITTED FOR APPROVAL WITHIN THE SHOP DRAWINGS PACKAGE TO THE SEPTA PROJECT MANAGER.
16. PROTECT EXISTING CABLES AND EQUIPMENT DURING CONSTRUCTION. PAY FOR ALL COSTS ASSOCIATED WITH THE REPAIR OF ANY DAMAGED CABLES AND EQUIPMENT.
17. FIRE ALARM DEVICES SHALL NOT BE INSTALLED WHERE ACCESS IS IMPEDED BY MECHANICAL SYSTEMS, DUCTS, PIPES OR CONDUITS.
18. COORDINATE INSTALLATION OF FIRE ALARM DEVICES WITH THE MECHANICAL TRADE.
19. CEILING MOUNTED SMOKE DETECTORS TO BE MOUNTED TO UNDERSIDE OF STEEL BEAMS, IF APPLICABLE.

50% SUBMISSION
NOT FOR CONSTRUCTION

SOUTHEASTERN PENNSYLVANIA TRANSPORTATION AUTHORITY
EM&C DIVISION
1234 MARKET ST, 13TH FL.
PHILADELPHIA, PA 19107

CHIEF ENGINEER - EM&C
CHIEF ENGINEERING OFFICER - B&B
CHIEF RAIL TRANSIT OFFICER
SYSTEM SAFETY
DIRECTOR OF ENGINEERING - B&B
MANAGER - ARCH / ENGINEERING
PROJECT MANAGER

HDR
HDR Engineering, Inc.
Philadelphia, PA

ARORA
ARORA ENGINEERS
65 WILMINGTON WEST CHESTER PIKE
CHADDS FORD, PA 19317
PHONE 610.485.3000
FAX 610.485.7900

BY	DESCRIPTION	DATE
CKD	APD	

DATE PRINTED: 10/21/2025

PARK
SUBWAY/ELEVATED TRAINS
TRACTION POWER SUBSTATION REHABILITATION
FIRE ALARM
NOTES, SYMBOLS & ABBREVIATIONS

SCALE: AS SHOWN	SCALE FACTOR: 1:1
DATE: 08/22/2025	DRAWN BY: WAB
	CHECKED BY: CJM
WORK ORDER NO.: 276482	
SHEET NUMBER: **FA200**	
DWG. NO.: 1 OF 8	
SHT. NO.: 210 OF 452	
ARCHIVE NO.:	
COMPUTER FILE NO.: 17AN-FA200	REV. NO.: ---

STATUS: 50% SUBMISSION

C:\PWWORKING\PITTD\190891517\AN-FA200.DWG

GENERAL NOTES:

1. REFER TO DRAWING FA200 FOR NOTES, SYMBOLS & ABBREVIATIONS.
2. SEE FIRE ALARM DETAILS ON DRAWING FA207.

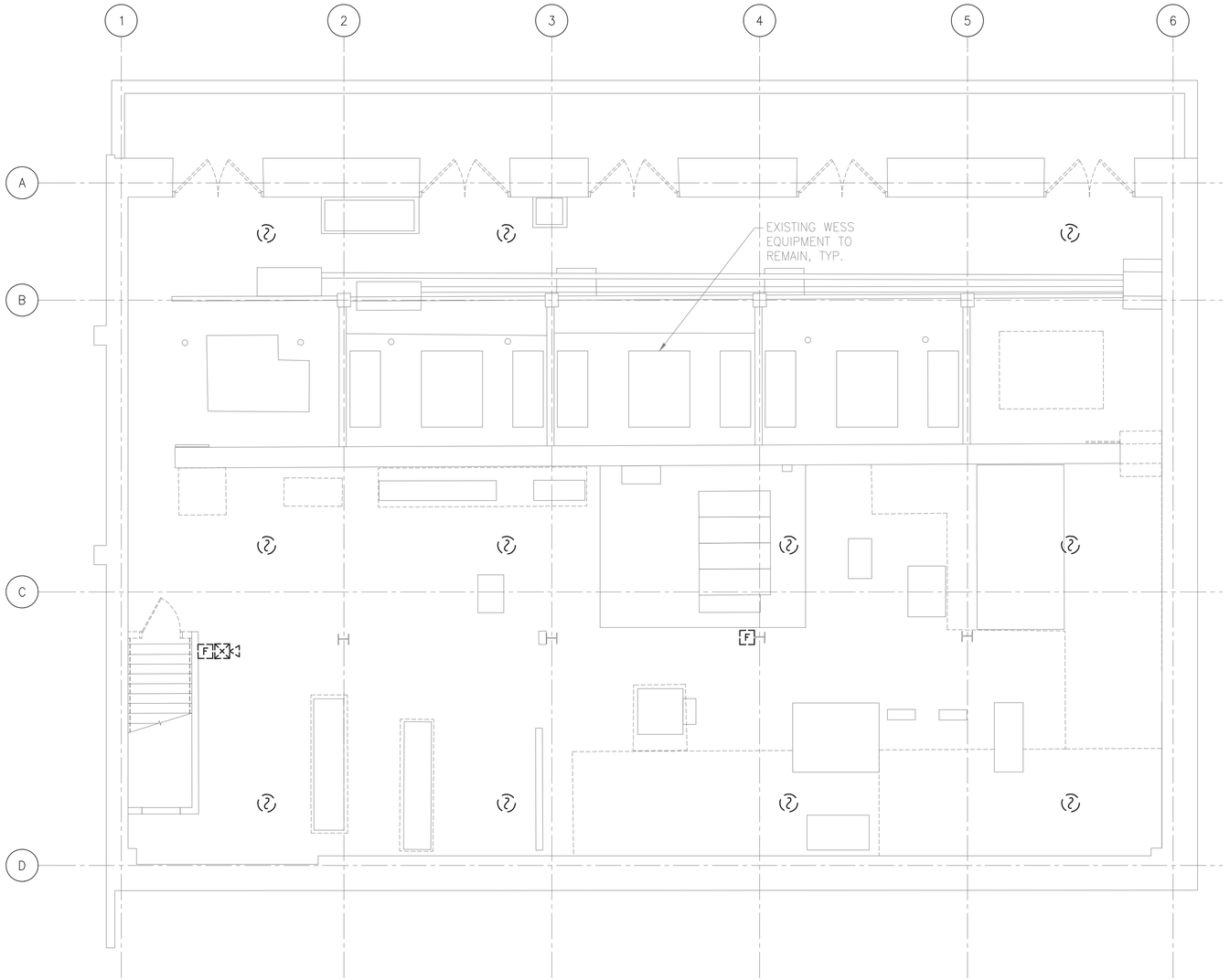

1 FA201 BASEMENT REMOVAL FLOOR PLAN
SCALE: 3/16" = 1'-0"

6 4 2 0 6
SCALE: 3/16"=1'0"

50% SUBMISSION
NOT FOR CONSTRUCTION

SOUTHEASTERN PENNSYLVANIA TRANSPORTATION AUTHORITY
EM&C DIVISION
1234 MARKET ST, 13TH FL.
PHILADELPHIA, PA 19107

CHIEF ENGINEER - EM&C
CHIEF ENGINEERING OFFICER - B&B
CHIEF RAIL TRANSIT OFFICER
SYSTEM SAFETY
DIRECTOR OF ENGINEERING - B&B
MANAGER - ARCH / ENGINEERING
PROJECT MANAGER

HDR Engineering, Inc.
Philadelphia, PA

ARORA ENGINEERS
45 WILMINGTON-WEST CHESTER PIKE
CHADDS FORD, PA 19317
PHONE 610.459.2600
FAX 610.459.2900

REV	DATE	DESCRIPTION	BY	CK'D	APP'D

DATE PRINTED: 10/21/2025

PARK
SUBWAY/ELEVATED TRAINS
TRACTION POWER SUBSTATION REHABILITATION
FIRE ALARM
DEMOLITION BASEMENT FLOOR PLAN

SCALE: AS SHOWN
SCALE FACTOR: 1:1
DATE: 08/22/2025
DRAWN BY: WAB
CHECKED BY: CJM
WORK ORDER NO.: 276482
SHEET NUMBER: **FA201**
DWG. NO.: 2 OF 8
SHT. NO.: 211 OF 452
ARCHIVE NO.:
COMPUTER FILE NO.: 17AN-FA201
REV. NO.: ---

STATUS: 50% SUBMISSION

C:\PW\WORKING\PITTD1908915\17AN-FA201.DWG

GENERAL NOTES:

1. REFER TO DRAWING FA200 FOR NOTES, SYMBOLS & ABBREVIATIONS.
2. SEE FIRE ALARM DETAILS ON DRAWING FA207.

KEYED NOTES:

[1] DEVICE LOCATED BELOW PLATFORM.

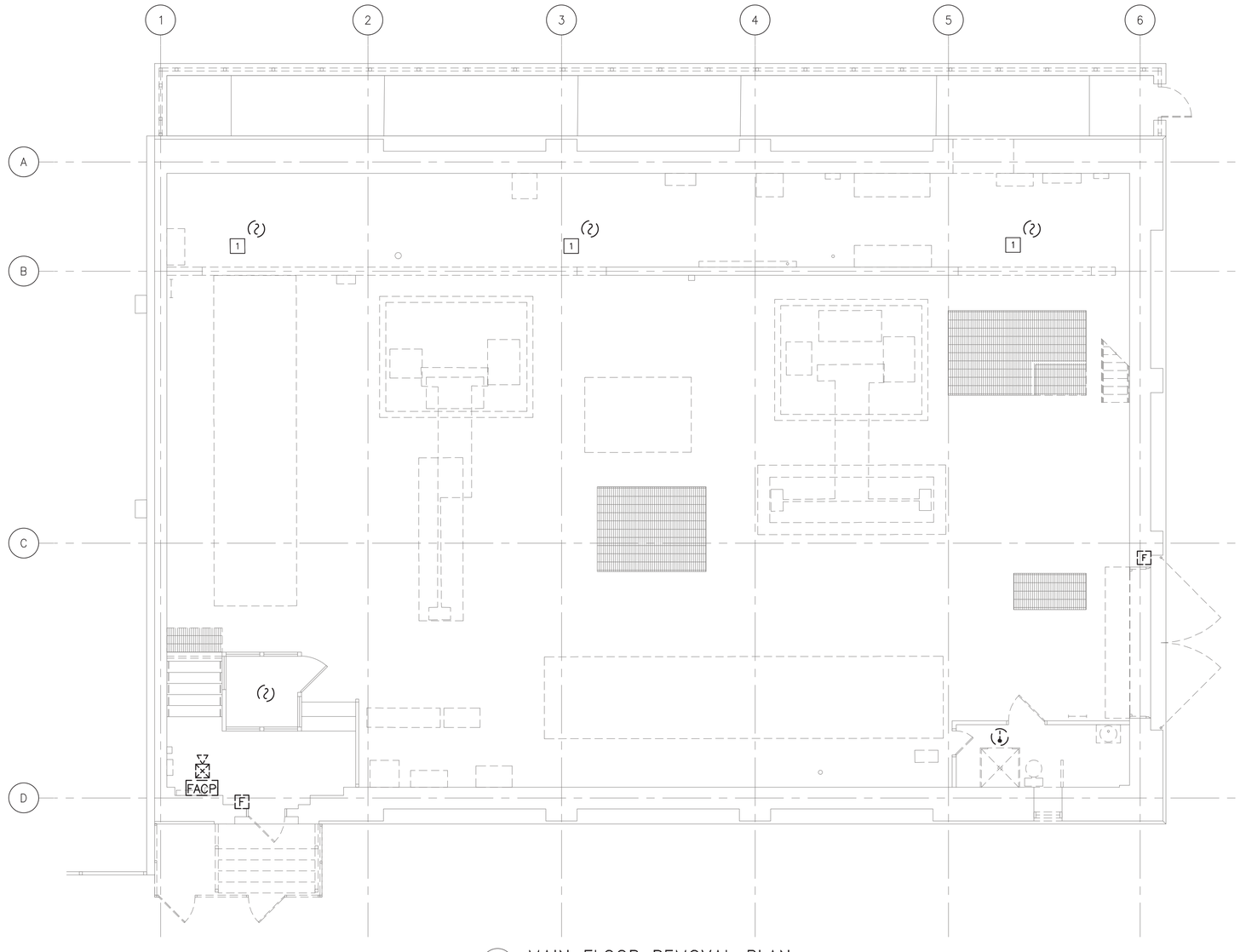

1 / FA202 MAIN FLOOR REMOVAL PLAN
SCALE: 3/16" = 1'-0"

6 4 2 0 6
SCALE: 3/16"=1'0"

50% SUBMISSION
NOT FOR CONSTRUCTION

SOUTHEASTERN PENNSYLVANIA TRANSPORTATION AUTHORITY
EM&C DIVISION
1234 MARKET ST, 13TH FL,
PHILADELPHIA, PA 19107

CHIEF ENGINEER - EM&C
CHIEF ENGINEERING OFFICER - B&B
CHIEF RAIL TRANSIT OFFICER
SYSTEM SAFETY
DIRECTOR OF ENGINEERING - B&B
MANAGER - ARCH / ENGINEERING
PROJECT MANAGER

HDR Engineering, Inc.
Philadelphia, PA

ARORA ENGINEERS
81 MILLINGTON WEST CHESTER PIKE
CHADDS FORD, PA 19317
PHONE 610.459.2400
FAX 610.459.7900

REV	DATE	DESCRIPTION	BY	CK'D	APP'D

DATE PRINTED: 10/21/2025

PARK
SUBWAY/ELEVATED TRAINS
TRACTION POWER SUBSTATION REHABILITATION
FIRE ALARM
DEMOLITION FIRST FLOOR PLAN

SCALE: AS SHOWN	SCALE FACTOR: 1:1
DATE: 08/22/2025	DRAWN BY: WAB
	CHECKED BY: CJM

WORK ORDER NO.: 276482

SHEET NUMBER: **FA202**

DWG. NO.:	3	OF	8
SHT. NO.:	212	OF	452

ARCHIVE NO.:

COMPUTER FILE NO.: 17AN-FA202
REV. NO.: ---

STATUS: 50% SUBMISSION

C:\PW\WORKING\PITTD1\908915\17AN-FA202.DWG

GENERAL NOTES:

1. REFER TO DRAWING FA200 FOR NOTES, SYMBOLS & ABBREVIATIONS.
2. SEE FIRE ALARM DETAILS ON DRAWING FA207.

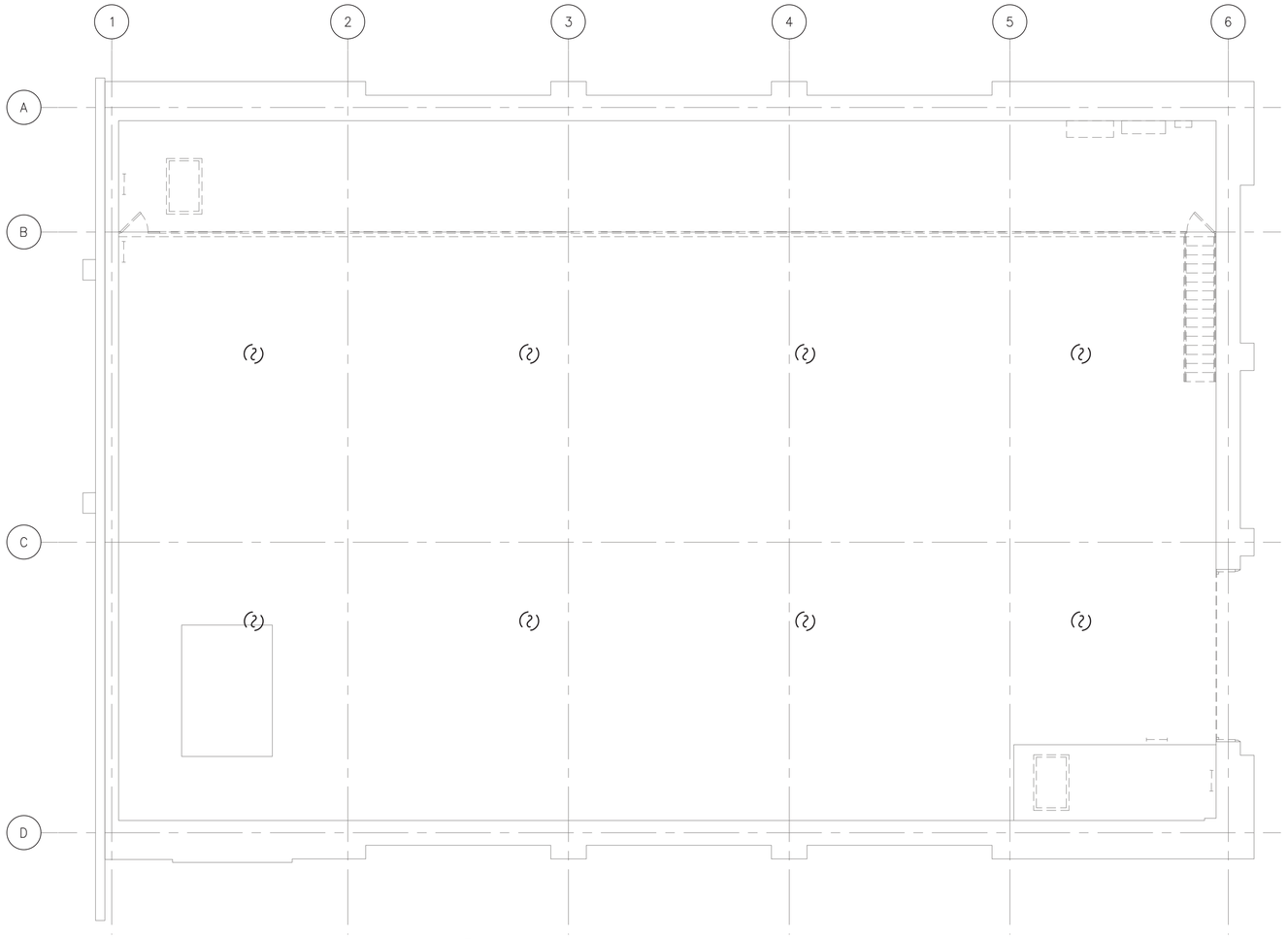

1 / FA203 MEZZANINE REMOVAL FLOOR PLAN
SCALE: 3/16" = 1'-0"

6 4 2 0 6
SCALE: 3/16"=1'0"

50% SUBMISSION
NOT FOR CONSTRUCTION

C:\PW\WORKING\PITTD1908915\17AN-FA203.DWG

SOUTHEASTERN PENNSYLVANIA TRANSPORTATION AUTHORITY
EM&C DIVISION
1234 MARKET ST, 13TH FL,
PHILADELPHIA, PA 19107

CHIEF ENGINEER - EM&C
CHIEF ENGINEERING OFFICER - B&B
CHIEF RAIL TRANSIT OFFICER
SYSTEM SAFETY
DIRECTOR OF ENGINEERING - B&B
MANAGER - ARCH / ENGINEERING
PROJECT MANAGER

HDR Engineering, Inc.
Philadelphia, PA

ARORA ENGINEERS
49 WILMINGTON WEST CHESTER PIKE
CHADDS FORD, PA 19317
PHONE 610.485.3600
FAX 610.485.7900

REV	DATE	DESCRIPTION	BY	CK'D	APP'D

DATE PRINTED: 10/21/2025

PARK
SUBWAY/ELEVATED TRAINS
TRACTION POWER SUBSTATION REHABILITATION
FIRE ALARM
DEMOLITION MEZZANINE FLOOR PLAN

SCALE: AS SHOWN	SCALE FACTOR: 1:1
DATE: 08/22/2025	DRAWN BY: WAB
	CHECKED BY: CJM
WORK ORDER NO.: 276482	
SHEET NUMBER: **FA203**	
DWG. NO.: 4 OF 8	
SHT. NO.: 213 OF 452	
ARCHIVE NO.:	
COMPUTER FILE NO.: 17AN-FA203	REV. NO.: ---

STATUS: 50% SUBMISSION

GENERAL NOTES:

1. REFER TO DRAWING FA200 FOR NOTES, SYMBOLS & ABBREVIATIONS.
2. SEE FIRE ALARM DETAILS ON DRAWING FA207.

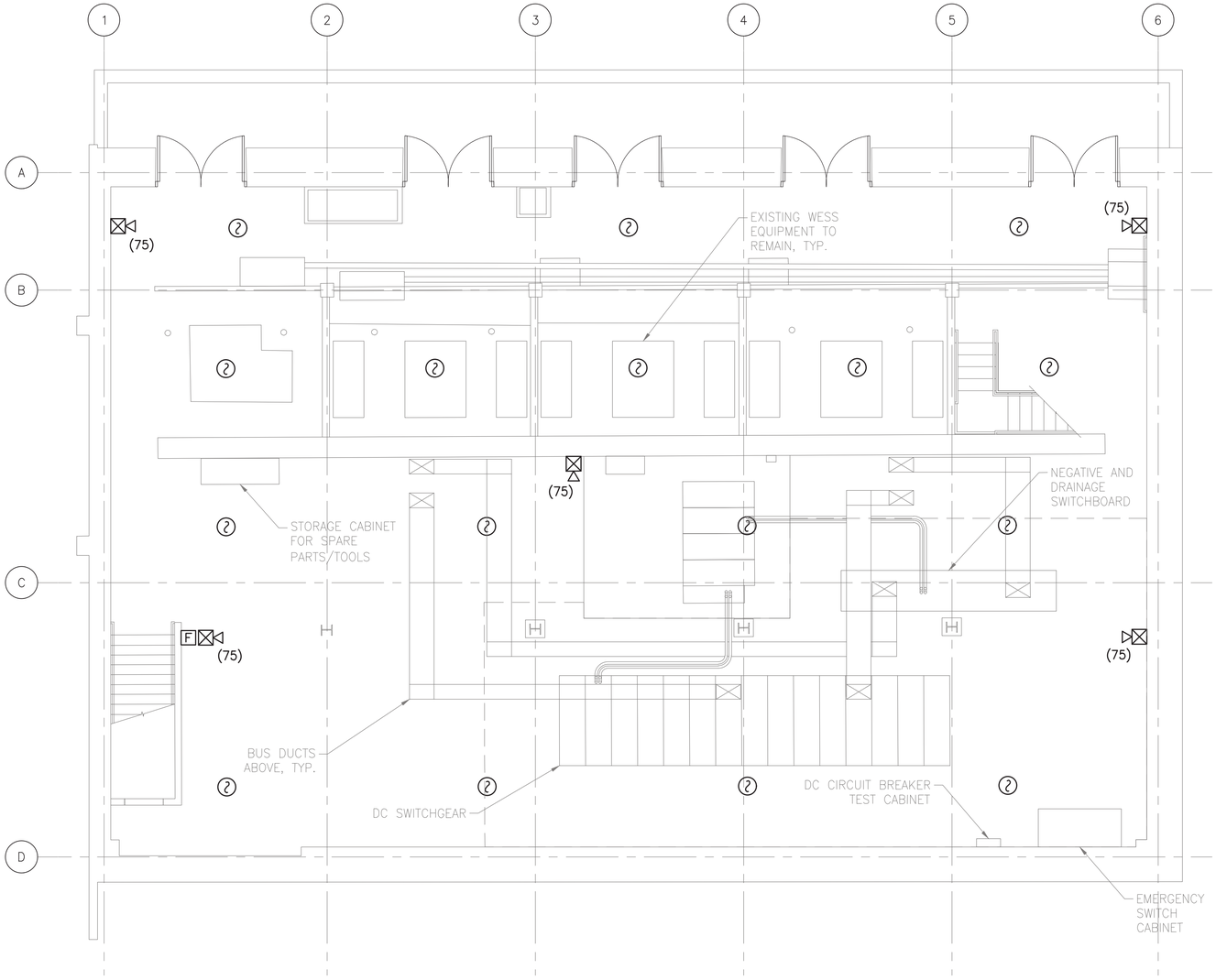

1 FA204 BASEMENT PROPOSED FLOOR PLAN
SCALE: 3/16" = 1'-0"

6 4 2 0 6

SCALE: 3/16"=1'0"

50% SUBMISSION
NOT FOR CONSTRUCTION

SOUTHEASTERN PENNSYLVANIA TRANSPORTATION AUTHORITY
EM&C DIVISION
1234 MARKET ST, 13TH FL.
PHILADELPHIA, PA 19107

CHIEF ENGINEER - EM&C
CHIEF ENGINEERING OFFICER - B&B
CHIEF RAIL TRANSIT OFFICER
SYSTEM SAFETY
DIRECTOR OF ENGINEERING - B&B
MANAGER - ARCH / ENGINEERING
PROJECT MANAGER

HDR Engineering, Inc.
Philadelphia, PA

ARORA ENGINEERS
61 WILMINGTON WEST CHESTER PIKE
CHADDS FORD, PA 19317
PHONE 610.485.7600
FAX 610.485.7990

REV	DATE	DESCRIPTION	BY	CK'D	APP'D

DATE PRINTED: 10/21/2025

PARK
SUBWAY/ELEVATED TRAINS
TRACTION POWER SUBSTATION REHABILITATION
FIRE ALARM
PROPOSED BASEMENT FLOOR PLAN

SCALE: AS SHOWN
SCALE FACTOR: 1:1
DATE: 08/22/2025
DRAWN BY: WAB
CHECKED BY: CJM
WORK ORDER NO.: 276482
SHEET NUMBER: **FA204**
DWG. NO.: 5 OF 8
SHT. NO.: 214 OF 452
ARCHIVE NO.:
COMPUTER FILE NO.: 17AN-FA204
REV. NO.: ---

STATUS: 50% SUBMISSION

C:\PW\WORKING\PITTD1908915\17AN-FA204.DWG

GENERAL NOTES:

1. REFER TO DRAWING FA200 FOR NOTES, SYMBOLS & ABBREVIATIONS.
2. SEE FIRE ALARM DETAILS ON DRAWING FA207.

KEYED NOTES:

(1) DEVICE LOCATED BELOW PLATFORM.

(2) SEPTA APPROVED FIRE ALARM CONTROL PANEL WITH BATTERY CABINET MOUNTED BELOW. PROVIDE THE APPROPRIATE "CM" MODULES FOR INTERFACING WITH SEPTA'S SCADA SYSTEM. TRADE SHALL COORDINATE THE INTERFACE CONNECTIONS BETWEEN THE FIRE ALARM MODULES AND THE APPROPRIATE SCADA CONNECTION POINTS.

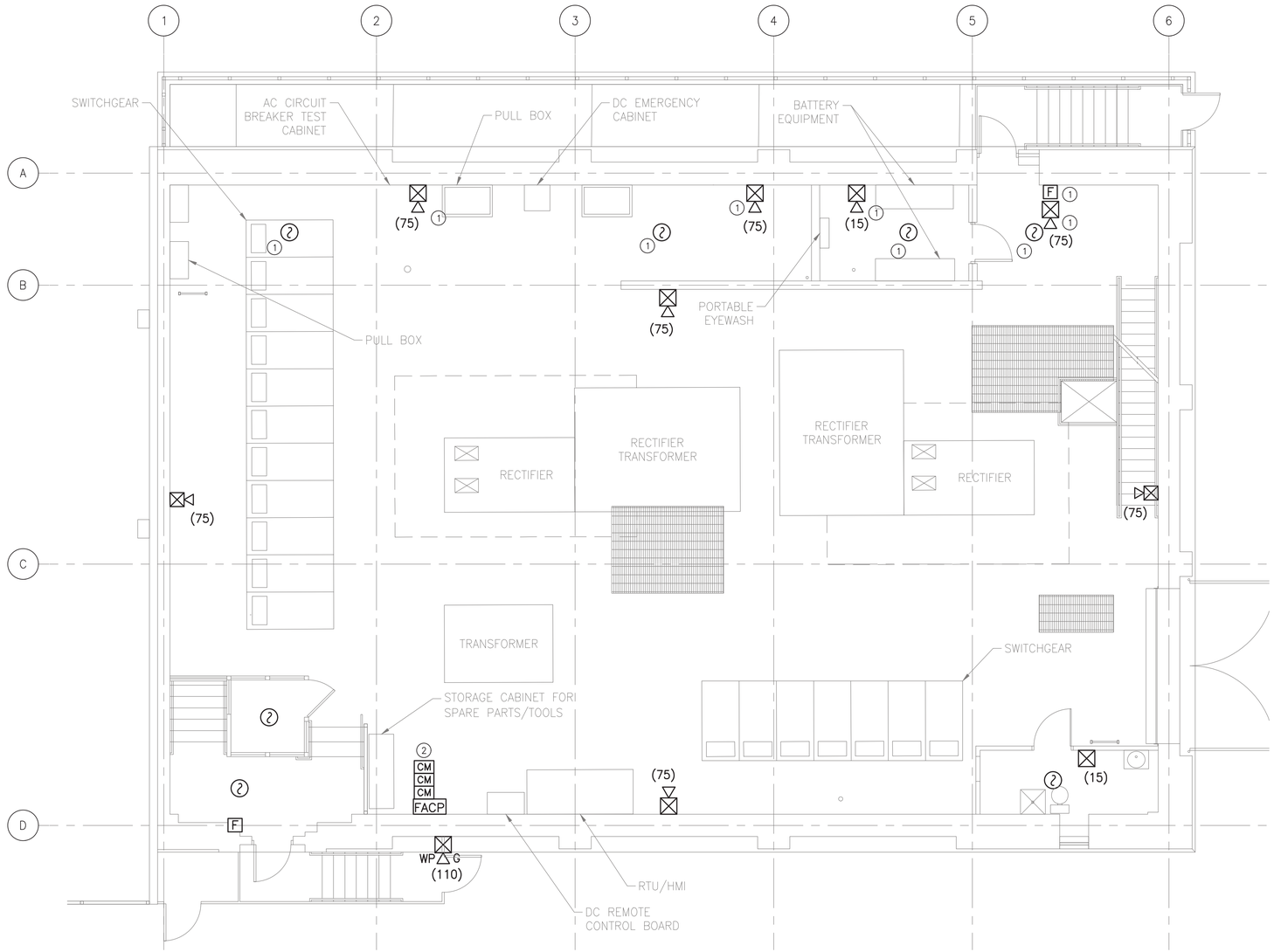

1 FA205 MAIN FLOOR PROPOSED PLAN
SCALE: 3/16" = 1'-0"

6 4 2 0 6
SCALE: 3/16"=1'0"

50% SUBMISSION
NOT FOR CONSTRUCTION

SOUTHEASTERN PENNSYLVANIA TRANSPORTATION AUTHORITY
EM&C DIVISION
1234 MARKET ST, 13TH FL.
PHILADELPHIA, PA 19107

CHIEF ENGINEER - EM&C
CHIEF ENGINEERING OFFICER - B&B
CHIEF RAIL TRANSIT OFFICER
SYSTEM SAFETY
DIRECTOR OF ENGINEERING - B&B
MANAGER - ARCH / ENGINEERING
PROJECT MANAGER

HDR Engineering, Inc.
Philadelphia, PA

ARORA ENGINEERS
65 WILMINGTON WEST CHESTER PIKE
CHADDS FORD, PA 19317
PHONE 610.459.2600
FAX 610.459.2900

REV	DATE	DESCRIPTION	BY	CK'D	APP'D

DATE PRINTED: 10/21/2025

PARK
SUBWAY/ELEVATED TRAINS
TRACTION POWER SUBSTATION REHABILITATION
FIRE ALARM
PROPOSED FIRST FLOOR PLAN

SCALE: AS SHOWN	SCALE FACTOR: 1:1
DATE: 08/22/2025	DRAWN BY: WAB
	CHECKED BY: CJM

WORK ORDER NO.: 276482

SHEET NUMBER: **FA205**

DWG. NO.: 6 OF 8
SHT. NO.: 215 OF 452
ARCHIVE NO.:

COMPUTER FILE NO.: 17AN-FA205
REV. NO.: ---

STATUS: 50% SUBMISSION

C:\PW\WORKING\PITTD1\908915\17AN-FA205.DWG

GENERAL NOTES:

1. REFER TO DRAWING FA200 FOR NOTES, SYMBOLS & ABBREVIATIONS.
2. SEE FIRE ALARM DETAILS ON DRAWING FA207.

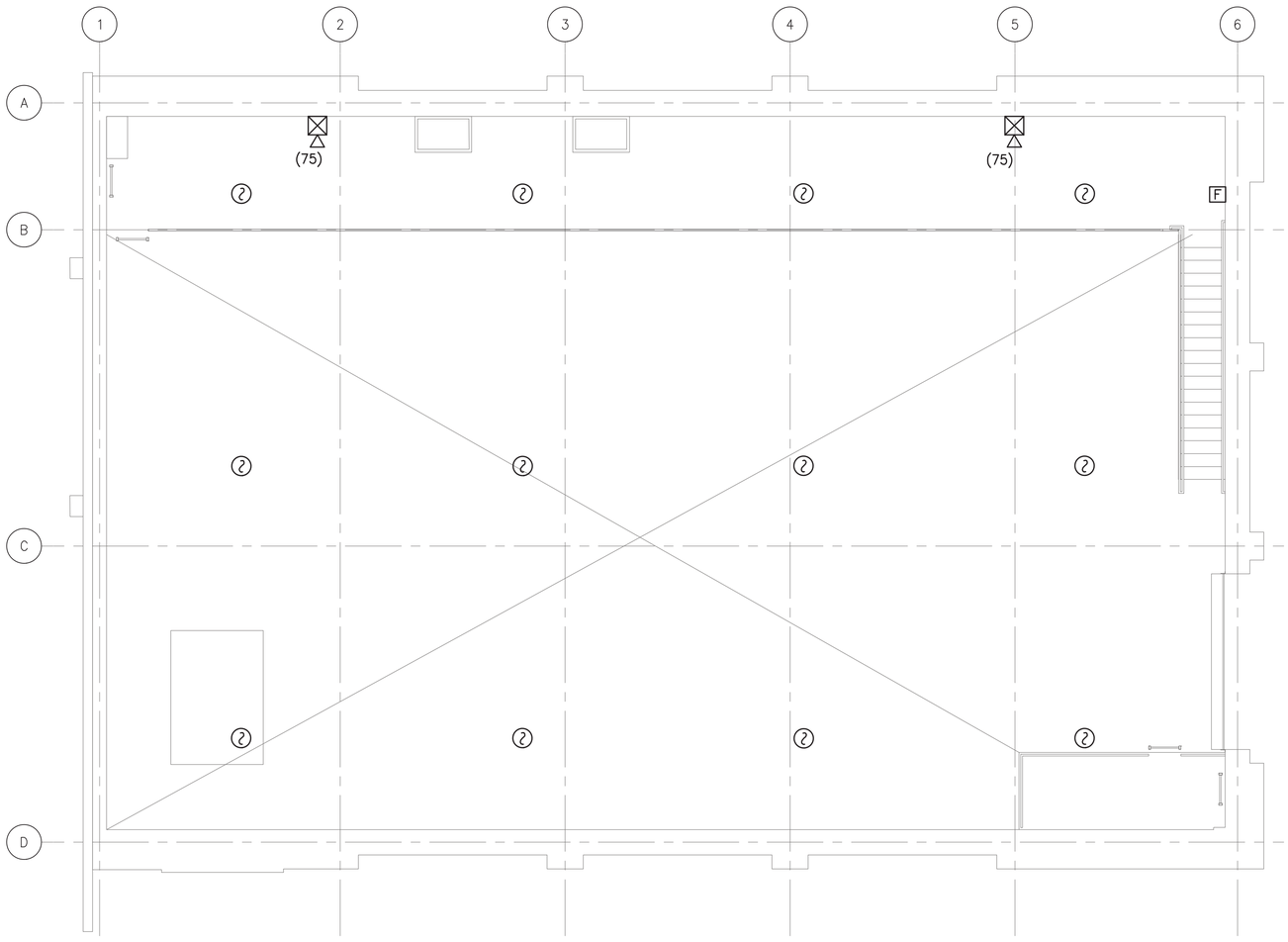

1 / FA206 MEZZANINE PROPOSED FLOOR PLAN
SCALE: 3/16" = 1'-0"

6 4 2 0 6

SCALE: 3/16"=1'0"

50% SUBMISSION
NOT FOR CONSTRUCTION

SOUTHEASTERN PENNSYLVANIA TRANSPORTATION AUTHORITY
EM&C DIVISION
1234 MARKET ST, 13TH FL,
PHILADELPHIA, PA 19107

CHIEF ENGINEER - EM&C
CHIEF ENGINEERING OFFICER - B&B
CHIEF RAIL TRANSIT OFFICER
SYSTEM SAFETY
DIRECTOR OF ENGINEERING - B&B
MANAGER - ARCH / ENGINEERING
PROJECT MANAGER

HDR Engineering, Inc.
Philadelphia, PA

ARORA ENGINEERS
81 WILMINGTON WEST CHESTER PIKE
CHADDS FORD, PA 19317
PHONE 610.485.2600
FAX 610.485.7900

REV	DATE	DESCRIPTION	BY	CK'D	APP'D

DATE PRINTED: 10/21/2025

STATUS: 50% SUBMISSION

PARK
SUBWAY/ELEVATED TRAINS
TRACTION POWER SUBSTATION REHABILITATION
FIRE ALARM
PROPOSED MEZZANINE FLOOR PLAN

SCALE: AS SHOWN	SCALE FACTOR: 1:1
DATE: 08/22/2025	DRAWN BY: WAB
	CHECKED BY: CJM

WORK ORDER NO.: 276482

SHEET NUMBER: **FA206**

DWG. NO.: 7 OF 8
SHT. NO.: 216 OF 452
ARCHIVE NO.:

COMPUTER FILE NO.: 17AN-FA206
REV. NO.: ---

C:\PW\WORKING\PITTD1908915\17AN-FA206.DWG

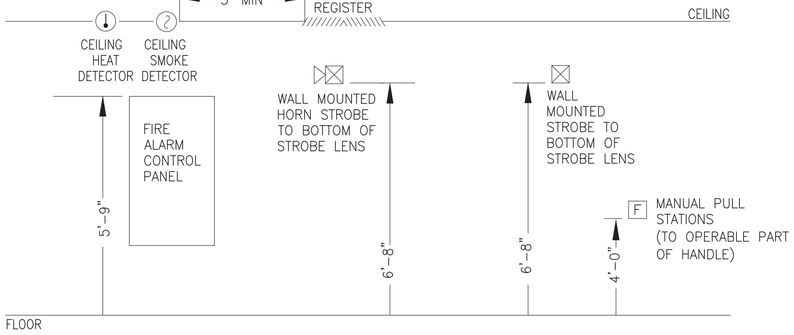

NOTE: COORDINATE WITH OTHER TRADE PLANS AND ELEVATIONS FOR SPECIFIC LOCATIONS OF FIRE ALARM DEVICES.

1 FA207 TYPICAL FIRE ALARM DEVICE AND EQUIPMENT MOUNTING HEIGHTS

SCALE: NOT TO SCALE

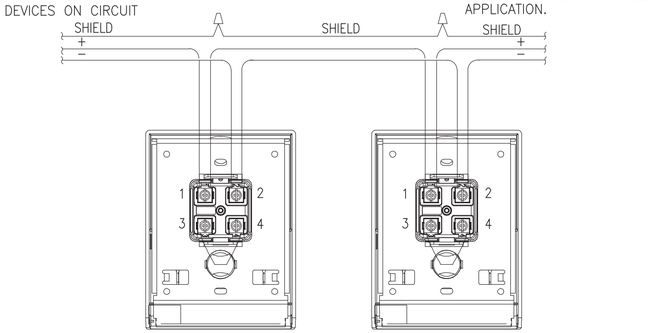

GENERAL NOTES:

1. EXISTING CONDITIONS SHOWN ARE BASED ON HISTORICAL DOCUMENTS, CIVIL SURVEYS AND SITE OBSERVATIONS. ALL DIMENSIONS AND CONDITIONS ARE TO BE VERIFIED IN THE FIELD.
2. REFER TO DRAWING FA200 FOR NOTES, SYMBOLS & ABBREVIATIONS.

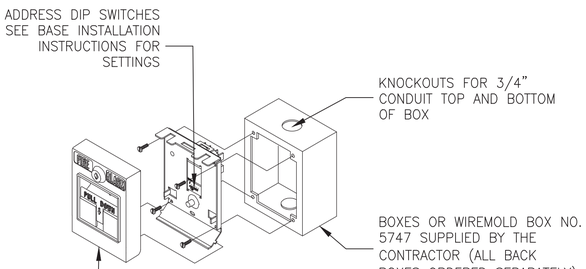

2 FA207 TYPICAL FIRE ALARM SLC MODULE DEVICE CIRCUITING AND CONNECTION

SCALE: NOT TO SCALE

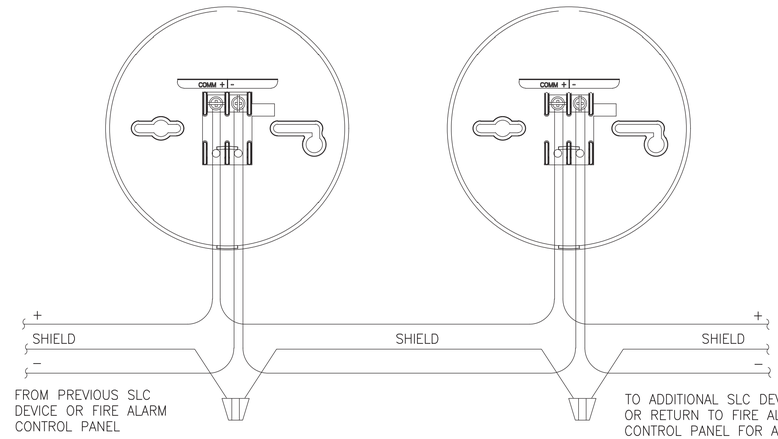

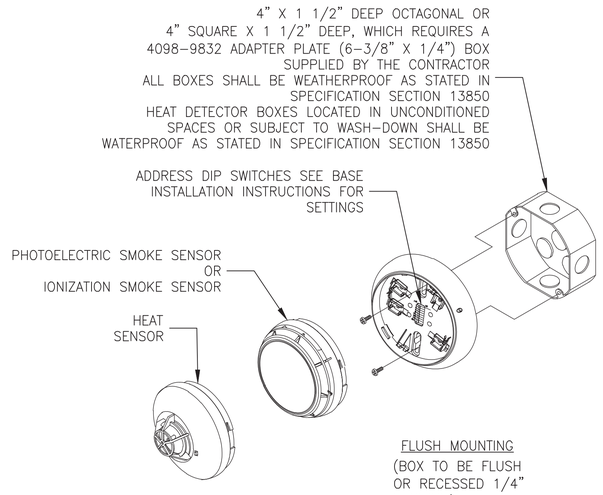

3 FA207 TYPICAL MANUAL PULL STATION MOUNTING

SCALE: NOT TO SCALE

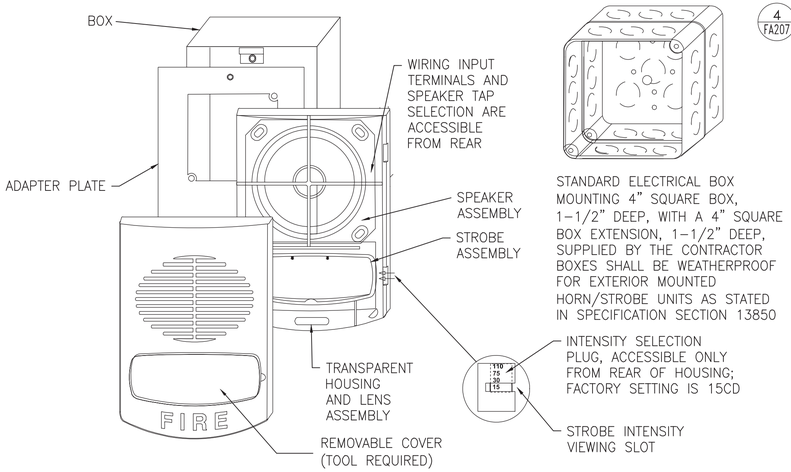

4 FA207 TYPICAL FIRE ALARM SLC SENSOR DEVICE CIRCUITING AND CONNECTION

SCALE: NOT TO SCALE

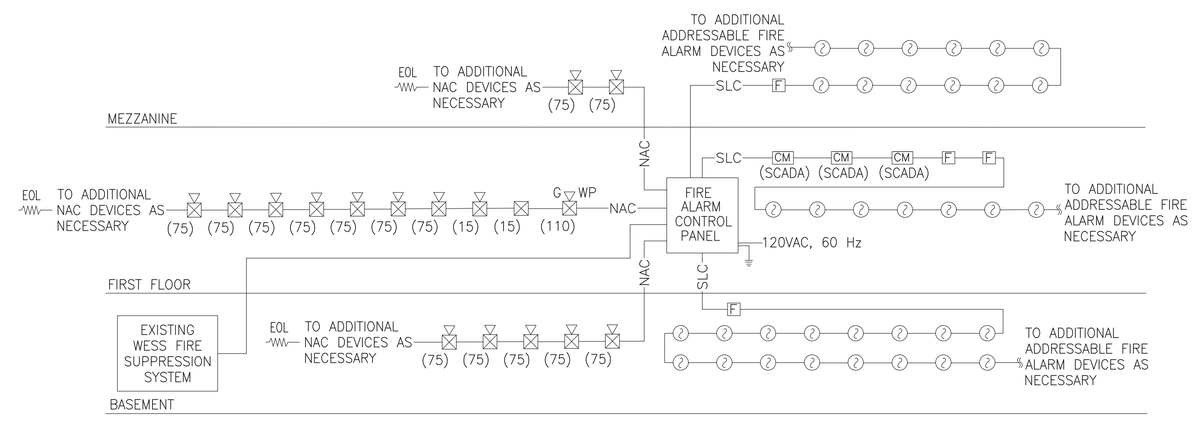

5 FA207 TYPICAL SMOKE OR HEAT DETECTOR MOUNTING

SCALE: NOT TO SCALE

6 FA207 TYPICAL HORN/STROBE MOUNTING

SCALE: NOT TO SCALE

7 FA207 TYPICAL FIRE ALARM RISER DIAGRAM

SCALE: NOT TO SCALE

50% SUBMISSION
NOT FOR CONSTRUCTION

SOUTHEASTERN PENNSYLVANIA TRANSPORTATION AUTHORITY
EM&C DIVISION
1234 MARKET ST, 13TH FL.
PHILADELPHIA, PA 19107

CHIEF ENGINEER - EM&C
CHIEF ENGINEERING OFFICER - B&B
CHIEF RAIL TRANSIT OFFICER
SYSTEM SAFETY
DIRECTOR OF ENGINEERING - B&B
MANAGER - ARCH / ENGINEERING
PROJECT MANAGER

HDR Engineering, Inc.
Philadelphia, PA

ARORA ENGINEERS
81 WILMINGTON WEST CHESTER PIKE
CHADDS FORD, PA 19317
PHONE 610.485.3600
FAX 610.485.7960

REV	DATE	DESCRIPTION	BY	CK'D	APD

DATE PRINTED: 10/21/2025

PARK
SUBWAY/ELEVATED TRAINS
TRACTION POWER SUBSTATION REHABILITATION
FIRE ALARM
DETAILS

SCALE: AS SHOWN	SCALE FACTOR: 1:1
DATE: 08/22/2025	DRAWN BY: WAB
	CHECKED BY: CJM
WORK ORDER NO.: 276482	
SHEET NUMBER: **FA207**	
DWG. NO.: 8 OF 8	
SHT. NO.: 217 OF 452	
ARCHIVE NO.:	
COMPUTER FILE NO.: 17AN-FA207	REV. NO.: ----

STATUS: 50% SUBMISSION

C:\PWWORKING\PITTD\19089151\17AN-FA207.DWG

1	1M	1000 KCMIL DC POSITIVE CABLE
	1MR	1000 KCMIL DC NEGATIVE RETURN CABLE
	10GND	NO. 10 AWG GROUND CONDUCTOR
	2M	2000 KCMIL DC POSITIVE CABLE
	2MR	2000 KCMIL DC NEGATIVE RETURN CABLE
	2 NO. 6	2 NO. 6 AWG CONDUCTOR
	2"C	2 INCH CONDUIT
A	A	AMPERES
	A–XD	CURRENT TRANSDUCER
	AC	ALTERNATING CURRENT
	AF	AMPERES FRAME
	AFF	ABOVE FINISHED FLOOR
	AIC	AMPS INTERRUPTING CAPACITY
	AL	ALUMINUM
	AM	AMMETER
	ANN	ANNUNCIATOR
	APPROX	APPROXIMATE
	AS	AMMETER SWITCH
	ASTM	AMERICAN SOCIETY FOR TESTING AND MATERIALS
	AT	AMPERES TRIP
	AUX	AUXILIARY
	AVE	AVENUE
	AWG	AMERICAN WIRE GAUGE
B	BDP	BATTERY DISTRIBUTION PANEL
	BKR	BREAKER
	BLDG	BUILDING
	BLK	BLOCKED OR BLOCKAGE
	BLVD	BOULEVARD
	BT	BUS TIE CIRCUIT BREAKER
C	C	CONDUIT, CONTACTOR
	CB	CIRCUIT BREAKER
	CF	CLOSING FUSE
	CI	CAST IRON
	CL	CURB LINE
	CKT	CIRCUIT
	CLF	CURRENT LIMITING FUSE
	COMP	COMPRESSOR
	CONC	CONCRETE
	CS	CONTROL SWITCH
	CST	CONTROL TEST SWITCH
	CT	CURRENT TRANSFORMER
	CX	DC CURRENT TRANSFORMER
D	DB	DECIBELS
	DC	DIRECT CURRENT
	DEPT	DEPARTMENT
	DET	DETAIL
	DIA	DIAMETER
	DIM	DIMENSIONS
	DISC	DISCONNECT
	DP	DEEP
	DWG	DRAWING
E	E	EAST
	EB	EASTBOUND
	EL, ELEV	ELEVATION
	EMG	EMERGENCY
	EMH	ELECTRIC MANHOLE
	EPR	ETHYLENE PROPYLENE RUBBER
	EQ	EQUAL
E	ER	ELECTRICALLY RESET
	EX	EXISTING
F	F–XD	FREQUENCY TRANSDUCER
	FDR	FEEDER
	FL	FLOOR
	FPP	FIBER PATCH PANEL
	FRE	FIBER REINFORCED EPOXY (SEE RTRC)
	FT	FEET
	FUT	FUTURE
G	G	GREEN
	GAL	GALLON
	GALV	GALVINIZED
	GIL	GREEN INDICATING LIGHT
	GND	GROUND
	GR	GRADE
	GRS	GALVANIZED RIGID STEEL
H	HMI	HUMAN MACHINE INTERFACE
	HORIZ	HORIZONTAL
	HR	HAND RESET
	HV	HIGH VOLTAGE
	HW	HOT WATER
	HZ	HERTZ
I	IB	INBOUND
	ID	INSIDE DIAMETER, IDENTIFICATION
	IED	INTELLIGENT ELECTRONIC DEVICE
	IN	INCH
	ISO	ISOLATION
	INST	INSTANTANEOUS
J	JB	JUNCTION BOX
K	KA	KILO–AMPERES
	KCMIL	THOUSAND CIRCULAR MILS
	KV	KILO–VOLTS
	KVA	KILO–VOLT AMPERES
	KW	KILO–WATTS
L	L	LOCAL
	LBS	POUNDS
	LC	LOAD CENTER
	LO	LOCKOUT
	LP	LIGHTING POLE FIXTURE, LOW POINT
	LS	LIMIT SWITCH
	LV	LOW VOLTAGE
M	MAX	MAXIMUM
	MAN, MNL	MANUAL
	MCB	MAIN CIRCUIT BREAKER
	MCM	MILLION CIRCULAR MILLIMETERS
	MFR–M	MULTI–FUNCTION RELAY METERING
	MH	MANHOLE
	MIN	MINIMUM
	MMFO	MULTIMODE FIBER OPTIC CABLE
	MPR	MOTOR PROTECTION RELAY
	MR	MULTI–RATIO
	MV	MILLIVOLT
N	N	NORTH
	NB	NORTHBOUND
	NC, N.C.	NORMALLY CLOSED
	NEG, N	NEGATIVE
	NEUT, N	NEUTRAL
	NIC	NOT IN CONTRACT
	NLTC	NO LOAD TAP CHANGER
	NO, N.O.	NORMALLY OPEN
	N.T.S.	NOT TO SCALE
O	OB	OUTBOUND
	OC	ON–CENTER, OVERCURRENT
	OCS	OVERHEAD CATENARY SYSTEM
	OD	OUTSIDE DIAMETER
	OOS	OUT OF SERVICE
P	PAC	PROGRAMMABLE AUTOMATION CONTROLLER
	PC	PERSONAL COMPUTER
	PECO	PHILADELPHIA ELECTRIC COMPANY
	PH, ø	PHASE
	PL	POSITIVE LOCAL, PLATE, PROPERTY LINE
	PLC	PROGRAMMABLE LOGIC CONTROLLER
	POL	POLARIZING
	POS	POSITIVE
	PROP	PROPERTY
	PRT	PHILADELPHIA RAPID TRANSIT
	PT	POTENTIAL TRANSFORMER
	PTS	POTENTIAL TRANSFORMERS
	PVC	POLY VINYL CHLORIDE
	PWR	POWER
Q	QTY	QUANTITY
R	R	RETURN NEGATIVE CABLE, RED
	REC	RECEPTACLE
	RECT	RECTIFIER
	REQ'D	REQUIRED
	RES	RESISTOR
	RGS	RIGID GALVANIZED STEEL
	RIL	RED LIGHT INDICATION
	RM	ROOM
	RMC	RIGID METAL CONDUIT
	ROW	RIGHT OF WAY
	RTRC	REINFORCED THERMOSETTING RESIN CONDUIT
	RTU	REMOTE TERMINAL UNIT
S	S	SECTION, SOUTH, SUPERVISORY
	SA	SURGE ARRESTOR
	SB	SOUTHBOUND
	SC	SHORT CIRCUIT, SURGE CAPACITOR
	SCADA	SUPERVISORY CONTROL AND DATA ACQUISITION
	SE	STORED ENERGY
	SEC	SECOND
	SEPTA	SOUTHEASTERN PENNSYLVANIA TRANSPORTATION AUTHORITY
	SS	SUBSTATION
	ST	STREET
	STA	STATIONING
	STD	STANDARD
S	SUPL	OVERHEAD SUPPLEMENTARY CABLE
	SUPV	SUPERVISORY
	SVC	SERVICE
	SW	SWITCH
	SWGR	SWITCHGEAR
T	T	TRANSFORMER
	TEMP	TEMPERATURE
	TF	TRIPPING FUSE
	THK	THICK
	TK	TRACK
	TOT	TOTALIZER
	TP	TRACTION POWER
	TPSS	TRACTION POWER SUBSTATION
	TRANSF	TRANSFER
	TS	TEST SWITCH
	TW	TROLLEY WIRE
	TYP	TYPICAL
U	U/G	UNDERGROUND
	UON	UNLESS OTHERWISE NOTED
V	V	VOLTS OR VOLTAGE
	V–XD	VOLTAGE TRANSDUCER
	VA	VALVE, VOLT–AMPERE
	VAR	VOLT–AMPERE REACTIVE
	VM	VOLTMETER
	VS	VOLTMETER SWITCH
W	W	WEST, WIRE, WHITE
	W/	WITH
	W–XD	WATTAGE TRANSDUCER
	WB	WESTBOUND
	WESS	WAYSIDE ENERGY STORAGE SYSTEM
	WH	WATT–HOUR METER
	WLI	WHITE LIGHT INDICATION
	WP	WATERPROOF
X	XD	TRANSDUCER
	XFMR	TRANSFORMER
Y	YEL	YELLOW
Z	ZL	ZIP LINE, POLY PULL LINE

50% SUBMISSION
NOT FOR CONSTRUCTION

C:\PW\WORKING\PITTD\96154217AN-TP200.DWG

SOUTHEASTERN PENNSYLVANIA TRANSPORTATION AUTHORITY
EM&C DIVISION
1234 MARKET ST, 13TH FL.
PHILADELPHIA, PA 19107

CHIEF ENGINEER - EM&C
CHIEF ENGINEERING OFFICER - B&B
CHIEF RAIL TRANSIT OFFICER
SYSTEM SAFETY
DIRECTOR OF ENGINEERING - B&B
MANAGER - ARCH / ENGINEERING
PROJECT MANAGER

HDR Engineering, Inc.
Philadelphia, PA

REV	DATE	DESCRIPTION	BY	CKD	APD

DATE PRINTED: 10/21/2025

PARK
SUBWAY/ELEVATED TRAINS
TRACTION POWER SUBSTATION REHABILITATION
TRACTION POWER
ABBREVIATIONS

SCALE: NTS	SCALE FACTOR: -
DATE: 08/22/2025	DRAWN BY: ARG
	CHECKED BY: BH
WORK ORDER NO.: 276482	
SHEET NUMBER: **TP200**	
DWG. NO.: 1 OF 35	
SHT. NO.: 218 OF 452	
ARCHIVE NO.:	
COMPUTER FILE NO.: 17AN-TP200	REV. NO.: -

STATUS: 50% SUBMISSION

30E = CLEARING RATING FUSE

CLF = CURRENT LIMITING FUSE

TRANSFORMER

15KV–120V / 2
POTENTIAL TRANSFORMER
UPPER = NO. RATIO
LOWER = NO. QTY OF XFMR

100/5 / 3
CURRENT TRANSFORMER
UPPER = NO. RATIO
LOWER = NO. QTY OF XFMR

3 PHASE DELTA CONNECTION

3 PHASE WYE CONNECTION

3 PHASE WYE CONNECTION
(GROUNDED)

OPEN DELTA CONNECTION
(GROUNDED / UN–GROUNDED)

BUS DUCT

52
MEDIUM VOLTAGE DRAWOUT
CIRCUIT BREAKER

FUSE DISCONNECT SWITCH

MANHOLE DESIGNATIONS

EMH #30
ELECTRIC MANHOLE NO. 30

TMH #1
TELEPHONE MANHOLE NO. 1

MH MA01E
MANHOLE AT GRADE

EXISTING MANHOLE

2 / TP130
SECTION "2" AS SHOWN ON DRAWING TP130

DEVICE DISCONNECT CONTACTS

50
RELAY OPERATING COIL NUMBER
DESIGNATES RELAY TYPE

DC CIRCUIT BREAKER

FUNCTIONAL INTERCONNECTION AMONG
CONTROL PROTECTIVE AND POWER
DEVICES (ARROW DENOTES DIRECTION
OF CONTROL)

DIODE/DIODE RECTIFIER

DC CURRENT SHUNT

NL
NEON HIGH VOLTAGE INDICATORS
(CABLE ALIVE INDICATION)

WITHDRAWABLE SINGLE POLE
DC CIRCUIT BREAKER
WITH DIRECT ACTING TRIP ELEMENT

NORMALLY OPEN CONTACT

NORMALLY CLOSED CONTACT

SA
SURGE ARRESTER

LA
LIGHTNING ARRESTER

GENERATOR

BATTERY

GROUND

GROUND ROD

CABLE ROUTE THROUGH FLOOR

CABLE ROUTE THROUGH CEILING

M–A
MANUAL–AUTOMATIC
TRANSFER MODE
SELECTOR SWITCH

CS
CONTROL SWITCH

SE
STORED ENERGY DEVICE

MULTI FUNCTION METER/IED [A] [V] [KW]
MULTIFUNCTION RELAY/IED
A = AMMETER
V = VOLTMETER
KWH = KILOWATT–HOUR METER

CABLE TERMINATION SEALING END

KWH
KILO–WATTHOUR METER

WH D
WATTHOUR METER DEMAND

A XD
CURRENT TRANSDUCER

V XD
VOLTAGE TRANSDUCER

A
AMMETER

AS
AMMETER SWITCH

V
VOLTMETER

VS
VOLTMETER SWITCH

TS
TEST SWITCH

NLTC
NO LOAD TAP CHANGER

PHASING RECEPTACLE

S
THREE–POLE SINGLE THROW SWITCH

N.O.
DISCONNECT SWITCH, 1–POLE
N.O. = NORMALLY OPEN
N.C. = NORMALLY CLOSED

DISCONNECT SWITCH
2–POLE

B O BIL
BLUE INDICATING LAMP
(HEATER AMMETER)

G O GIL
GREEN INDICATING LAMP
(BREAKER OPEN)

R O RIL
RED INDICATING LAMP
(BREAKER CLOSED)

W O WIL
WHITE INDICATING LAMP
(SPRINGS CHARGED)

A O AIL
AMBER INDICATING LAMP

K
KEY INTERLOCK

43
LOCAL/SUPERVISORY CONTROL SWITCH

GDR
GROUND DETECTION RELAY

S
CONNECTION TO SCADA

50% SUBMISSION
NOT FOR CONSTRUCTION

SOUTHEASTERN PENNSYLVANIA TRANSPORTATION AUTHORITY
EM&C DIVISION
1234 MARKET ST, 13TH FL.
PHILADELPHIA, PA 19107

CHIEF ENGINEER - EM&C
CHIEF ENGINEERING OFFICER - B&B
CHIEF RAIL TRANSIT OFFICER
SYSTEM SAFETY
DIRECTOR OF ENGINEERING - B&B
MANAGER - ARCH / ENGINEERING
PROJECT MANAGER

HDR
HDR Engineering, Inc.
Philadelphia, PA

REV	DATE	DESCRIPTION	BY	CKD	APD

DATE PRINTED: 10/21/2025

PARK
SUBWAY/ELEVATED TRAINS
TRACTION POWER SUBSTATION REHABILITATION
TRACTION POWER
LEGENDS & SYMBOLS

SCALE: NTS	SCALE FACTOR: 1:1
DATE: 08/22/2025	DRAWN BY: DMW CHECKED BY: BH
WORK ORDER NO.: 276482	
SHEET NUMBER: **TP201**	
DWG. NO.: 2 OF 35	
SHT. NO.: 219 OF 453	
ARCHIVE NO.:	
COMPUTER FILE NO.: 17AN-TP201	REV. NO.: -

STATUS: 50% SUBMISSION

C:\PW\WORKING\PITTD0196154\2\17AN-TP201.DWG

DEVICE	DESCRIPTION
01	AC CIRCUIT BREAKER LOCAL CONTROL SWITCH
01–R	RECTIFIER 15KV AC CIRCUIT BREAKER REMOTE CONTROL SWITCH
04	RECTIFIER MASTER CONTROL RELAY
11	MULTI–FUNCTION RELAY – HEALTHY / FAILED
25	SYNCHRONISM CHECK RELAY
26RA	RECTIFIER HEAT SINK OVER–TEMPERATURE STAGE 1 – ALARM
26RX	AUXILIARY RELAY FOR DEVICE 26R
26RT	RECTIFIER HEAT SINK OVER–TEMPERATURE STAGE 2 – TRIP
26RHX	AUXILIARY RELAY FOR DEVICE 26RH
26A	TRANSFORMER OIL OVER–TEMPERATURE STAGE 1 – ALARM
26T	TRANSFORMER OIL OVER–TEMPERATURE STAGE 2 – TRIP
27	UNDERVOLTAGE RELAY
27A	LOSS OF DC AUXILIARY SUPPLY – ALARM
27T	LOSS OF DC AUXILIARY SUPPLY – TRIP
30	ANNUNCIATOR RELAY
32	RECTIFIER MAIN DC CIRCUIT BREAKER DIRECTIONAL INST O.C. TRIP DEVICE (REVERSE CURRENT)
33R	RECTIFIER COMPARTMENT DOOR SAFETY INTERLOCK
33T	TRANSFORMER COMPARTMENT DOOR SAFETY INTERLOCK
43 L/S	CONTROL MODE SELECTOR SWITCH
47	PHASE SEQUENCE RELAY
48	RECTIFIER INCOMPLETE SEQUENCE
49A	TRANSFORMER WINDING OVER–TEMPERATURE STAGE 1 – ALARM
49T	TRANSFORMER WINDING OVER–TEMPERATURE STAGE 2 – TRIP & LOCKOUT
50/51	INSTANTANEOUS AND TIME OVER–CURRENT – PHASE
50N/51N	INSTANTANEOUS AND TIME OVER–CURRENT – GROUND
51	TIME OVERCURRENT RELAY – PHASE
51C	TIME OVERCURRENT RELAY – CABLE OVERLOAD
51N	TIME OVERCURRENT RELAY – GROUND
51R	TIME OVERCURRENT RELAY – RECTIFIER OVERLOAD
52	AC CIRCUIT BREAKER
52–BT	AC CIRCUIT BREAKER – BUS TIE
52–F	AC CIRCUIT BREAKER – FEEDER
52–L	AC CIRCUIT BREAKER – INCOMING LINE
52–T	AC CIRCUIT BREAKER – RECTIFIER
58A	RECTIFICATION FAILURE RELAY – ALARM
58T	RECTIFICATION FAILURE RELAY – TRIP
64P	RECTIFIER GROUND RELAY – STRUCTURE HOT (TRIP)
64N	RECTIFIER GROUND RELAY – STRUCTURE GROUNDED (ALARM)
67	DIRECTIONAL OVERCURRENT RELAY – PHASE
67N	DIRECTIONAL OVERCURRENT RELAY – GROUND
69	PERMISSIVE CONTROL DEVICE

DEVICE	DESCRIPTION
71A	TRANSFORMER LOW OIL LEVEL – ALARM
71T	TRANSFORMER LOW OIL LEVEL – TRIP
72–R	DC CIRCUIT BREAKER – RECTIFIER MAIN DC
74	ALARM RELAY
86	LOCKOUT RELAY
86B	LOCKOUT RELAY – BUS DIFFERENTIAL
86X	LOCKOUT RELAY – RECTIFIER CONDITIONAL
84	BLOWN FUSE INDICATION
87B	DIFFERENTIAL RELAY – BUS ZONE
89	LOAD INTERRUPTER SWITCH
89N	RECTIFIER NEGATIVE LEAD DISCONNECT SWITCH
94	TRIPPING RELAY
98	RECTIFIER LOSS OF DIODE
99	RECTIFIER LOSS OF DIODE
101	DC CIRCUIT BREAKER – LOCAL CONTROL (TRIP/CLOSE) SWITCH
111	MULTI–FUNCTION RELAY – HEALTHY / FAILED
143	DC CIRCUIT BREAKER – CONTROL MODE SELECTOR (LOCAL/REMOTE/HMI) SWITCH
150F	DC TRACTION FEEDER – RATE OF RISE RELAY
164S	DC SWITCHGEAR – GROUND RELAY – STRUCTURE HOT (TRIP)
164SX	DC SWITCHGEAR – GROUND RELAY – STRUCTURE GROUNDED (ALARM)
169	DC TRACTION FEEDER – PERMISSIVE SETUP RELAY
172	DC TRACTION FEEDER CIRCUIT BREAKER
176	DC FEEDER CIRCUIT BREAKER – INSTANTANEOUS SERIES TRIP (DIRECT ACTING)
176F	DC FEEDER CIRCUIT BREAKER– INSTANTANEOUS OVERCURRENT RELAY
201C	SUPERVISORY INTERPOSING RELAY – CLOSE
201T	SUPERVISORY INTERPOSING RELAY – TRIP
GDR	GROUND DETECTION RELAY

50% SUBMISSION
NOT FOR CONSTRUCTION

SOUTHEASTERN PENNSYLVANIA TRANSPORTATION AUTHORITY
EM&C DIVISION
1234 MARKET ST, 13TH FL.
PHILADELPHIA, PA 19107

CHIEF ENGINEER - EM&C
CHIEF ENGINEERING OFFICER - B&B
CHIEF RAIL TRANSIT OFFICER
SYSTEM SAFETY
DIRECTOR OF ENGINEERING - B&B
MANAGER - ARCH / ENGINEERING
PROJECT MANAGER

HDR
HDR Engineering, Inc.
Philadelphia, PA

REV	DATE	DESCRIPTION	BY	CK'D	APD

DATE PRINTED: 10/21/2025

PARK
SUBWAY/ELEVATED TRAINS
TRACTION POWER SUBSTATION REHABILITATION
TRACTION POWER
DEVICE TABLES

SCALE: NTS
SCALE FACTOR: -
DATE: 08/22/2025
DRAWN BY: DMW
CHECKED BY: BH
WORK ORDER NO.: 276482
SHEET NUMBER: **TP202**
DWG. NO.: 3 OF 35
SHT. NO.: 219 OF 448
ARCHIVE NO.:
COMPUTER FILE NO.: 17AN-TP202
REV. NO.: -

STATUS: 50% SUBMISSION

C:\PW\WORKING\PITTD\19615421\17AN-TP202.DWG

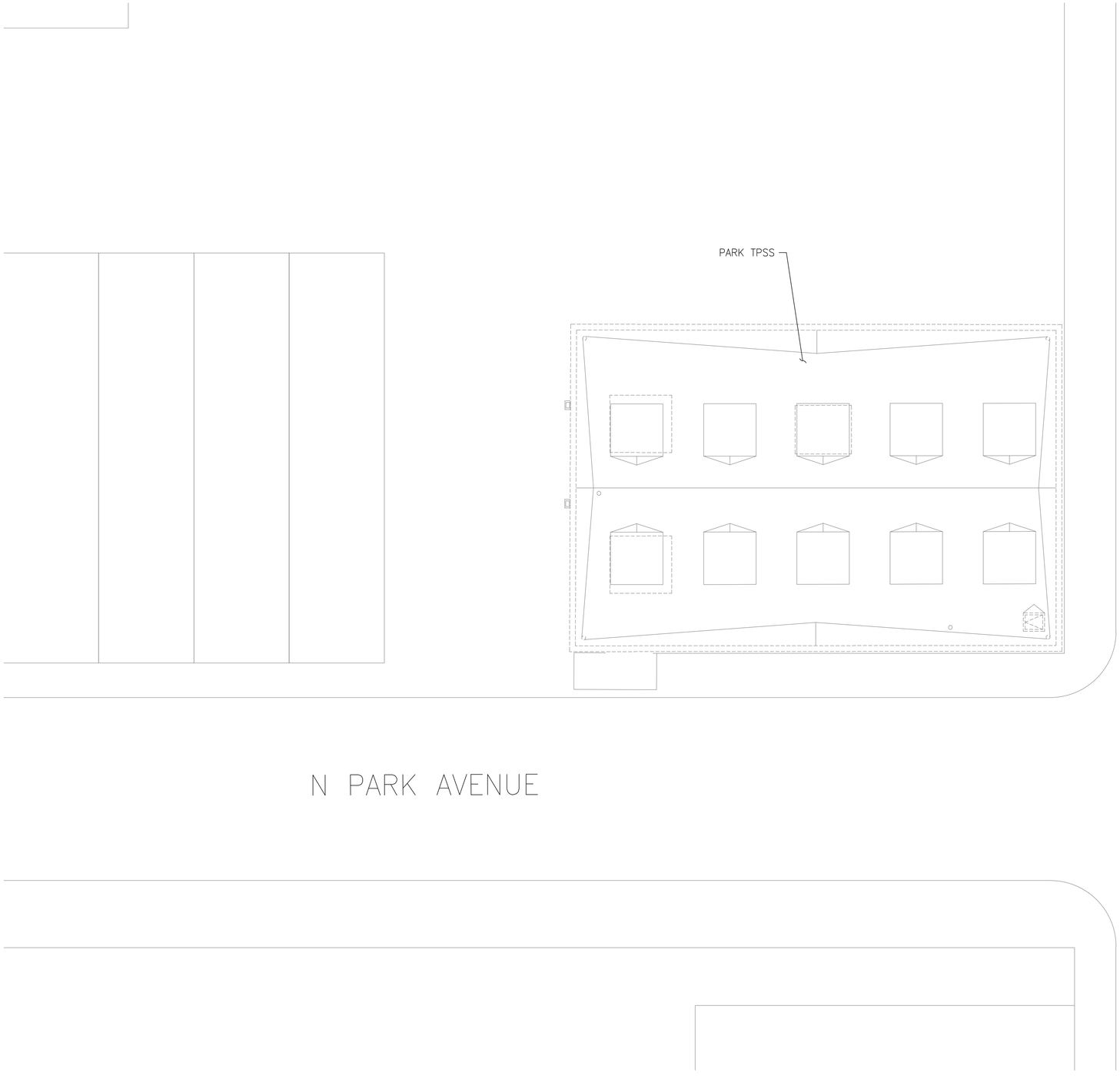

NOTES:

1. THE CONTRACTOR TO FIELD VERIFY THE EXISTING TRACTION POWER DUCTBANKS AND MANHOLES, AND INSTALL NEW DC FEEDERS FROM TPSS TO THESE EXISTING MANHOLES VIA EXISTING DUCTBANKS.

10 5 0 10

SCALE: 1"=10'

50% SUBMISSION
NOT FOR CONSTRUCTION

SOUTHEASTERN PENNSYLVANIA TRANSPORTATION AUTHORITY
EM&C DIVISION
1234 MARKET ST, 13TH FL.
PHILADELPHIA, PA 19107

CHIEF ENGINEER - EM&C

CHIEF ENGINEERING OFFICER - B&B

CHIEF RAIL TRANSIT OFFICER

SYSTEM SAFETY

DIRECTOR OF ENGINEERING - B&B

MANAGER - ARCH / ENGINEERING

PROJECT MANAGER

HDR Engineering, Inc.
Philadelphia, PA

REV	DATE	DESCRIPTION	BY	CK'D	APP'D

PARK
SUBWAY/ELEVATED TRAINS
TRACTION POWER SUBSTATION REHABILITATION
TRACTION POWER
SUBSTATION SITE PLAN

SCALE: NTS
SCALE FACTOR: -
DATE: 08/22/2025
DRAWN BY: DMR
CHECKED BY: BH
WORK ORDER NO.: 276482
SHEET NUMBER: **TP205**
DWG. NO.: 4 OF 35
SHT. NO.: 221 OF 453
ARCHIVE NO.:
COMPUTER FILE NO.: 17AN-TP205
REV. NO.: -

DATE PRINTED: 10/21/2025

STATUS: 50% SUBMISSION

C:\PWWORKING\PTTD\D1961542\17AN-TP205.DWG

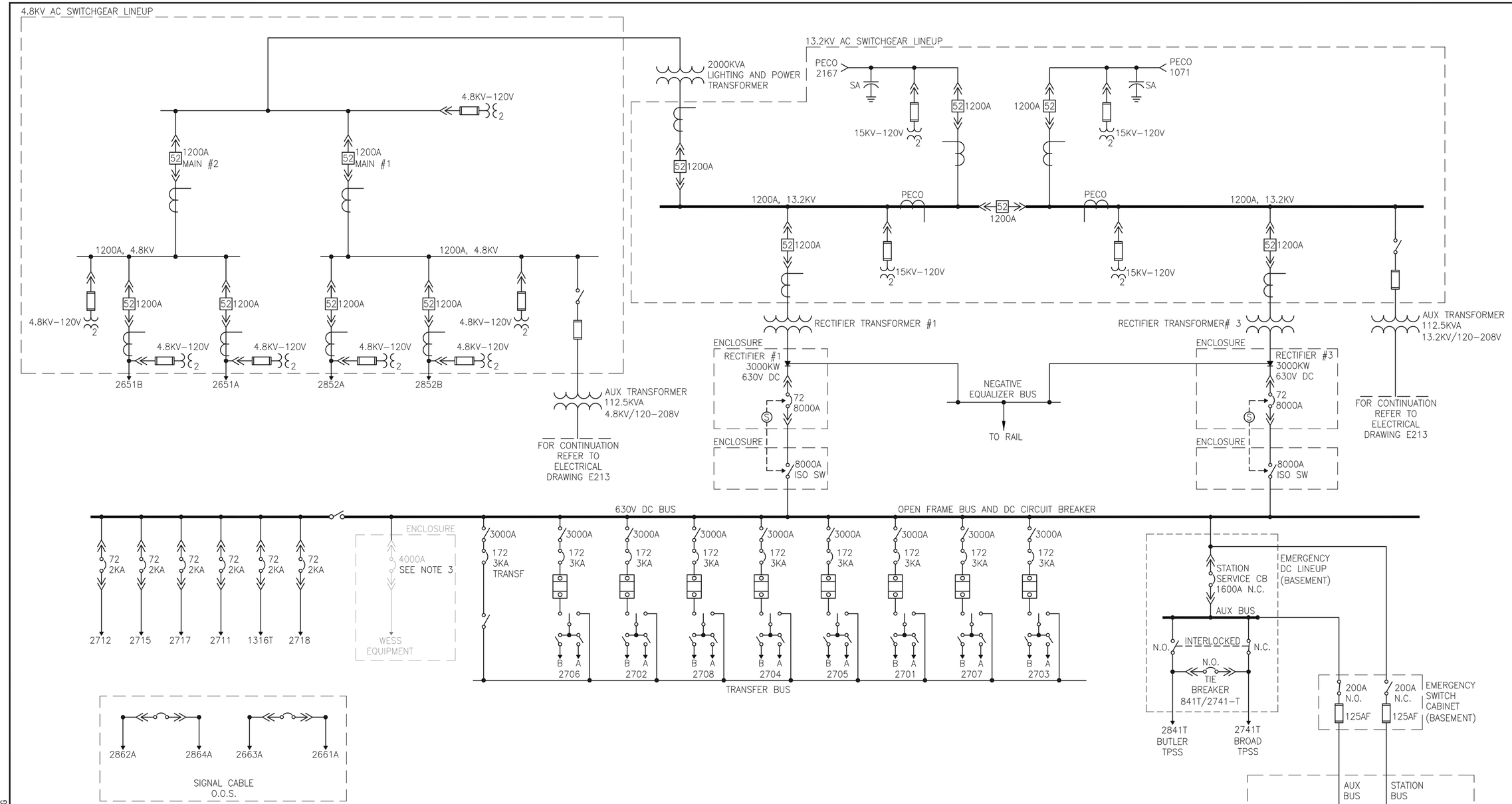

NOTES:

1. REFER TO DRAWING TP201 FOR LEGENDS AND SYMBOLS.
2. REFER TO SEPTA DRAWING E01 OF WORK ORDER 736–3002 FOR THE 630V DC EMERGENCY POWER SINGLE LINE DIAGRAM.
3. THE CONTRACTOR TO RESEARCH THE DETAILS OF THE EXISTING DC CIRCUIT BREAKER FOR WESS EQUIPMENT. SHOW TIE–IN POINT ON THIS DIAGRAM. WESS CIRCUIT BREAKER REMAINS.
4. REFER TO SEPTA WORK ORDER 30206 DRAWING 7E–16563 FOR THE 4800V SINGLE LINE DIAGRAM.
5. EXISTING WESS EQUIPMENT SHALL REMAIN. DEMOLISH ALL OTHER TRACTION POWER EQUIPMENT.
6. DEMOLISH EXISTING DC POSITIVE AND NEGATIVE CABLES OUT TO THE MANHOLES NEAREST THE TPSS BUILDING.

50% SUBMISSION
NOT FOR CONSTRUCTION

SOUTHEASTERN PENNSYLVANIA TRANSPORTATION AUTHORITY
EM&C DIVISION
1234 MARKET ST, 13TH FL.
PHILADELPHIA, PA 19107

CHIEF ENGINEER - EM&C
CHIEF ENGINEERING OFFICER - B&B
CHIEF RAIL TRANSIT OFFICER
SYSTEM SAFETY
DIRECTOR OF ENGINEERING - B&B
MANAGER - ARCH / ENGINEERING
PROJECT MANAGER

HDR Engineering, Inc.
Philadelphia, PA

REV	DATE	DESCRIPTION	BY	CK'D	APD

DATE PRINTED: 10/21/2025

PARK
SUBWAY/ELEVATED TRAINS
TRACTION POWER SUBSTATION REHABILITATION
TRACTION POWER
EXISTING SINGLE LINE DIAGRAM

SCALE: NTS	SCALE FACTOR: -
DATE: 08/22/2025	DRAWN BY: DMW
	CHECKED BY: BH
WORK ORDER NO.: 276482	
SHEET NUMBER: **TP206**	
DWG. NO.: 5 OF 35	
SHT. NO.: 222 OF 453	
ARCHIVE NO.:	
COMPUTER FILE NO.: 17AN-TP206	REV. NO.: -

STATUS: 50% SUBMISSION

C:\PWWORKING\PITTD\19615420\17AN-TP206.DWG

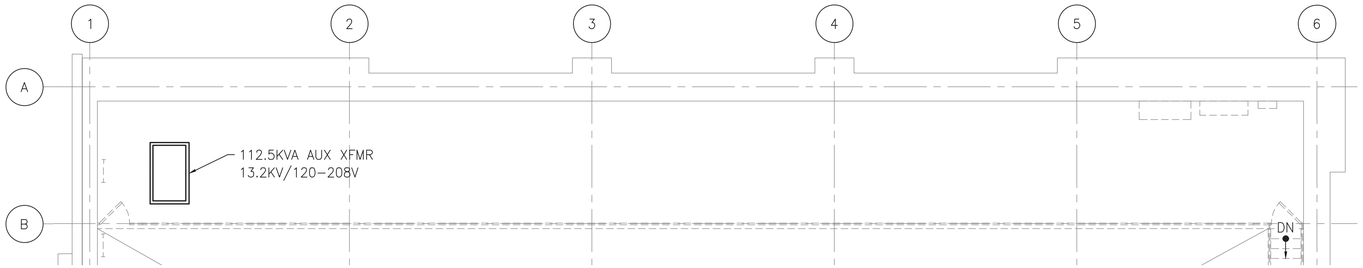

1 TP207 EXISTING MEZZANINE EQUIPMENT PLANS
SCALE: 1" = 5'

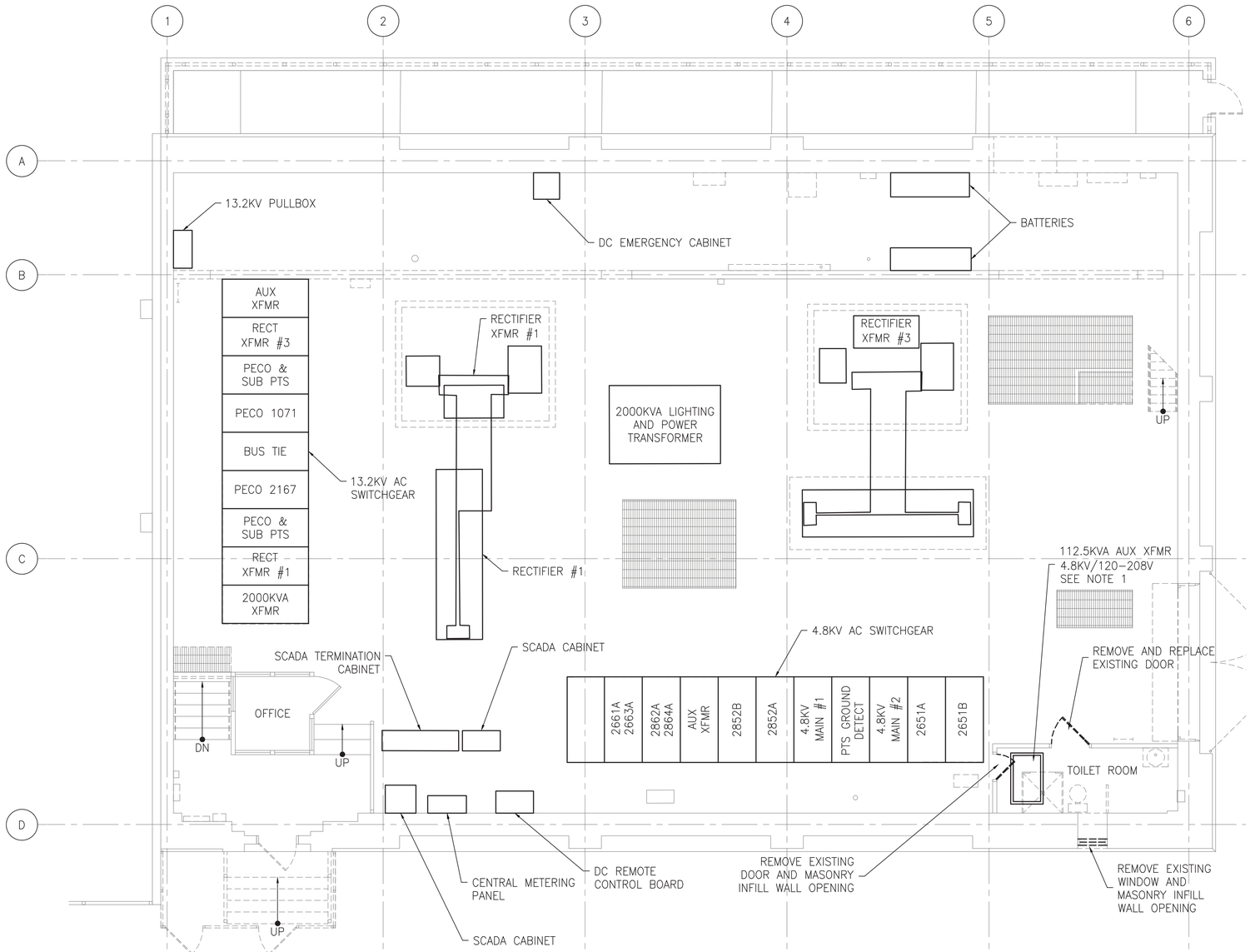

2 TP207 EXISTING FIRST FLOOR EQUIPMENT PLANS
SCALE: 1" = 5'

NOTES:

1. 112.5KVA AUXILIARY TRANSFORMER IS LOCATED ABOVE TOILET ROOM.
2. BOLD ITEMS ON THIS DRAWING TO BE DEMOLISHED.

5 2.5 0 5
SCALE: 1"=5'

50% SUBMISSION
NOT FOR CONSTRUCTION

C:\PW\WORKING\PITTD\196154217AN-TP207.DWG

SOUTHEASTERN PENNSYLVANIA TRANSPORTATION AUTHORITY
EM&C DIVISION
1234 MARKET ST, 13TH FL,
PHILADELPHIA, PA 19107

CHIEF ENGINEER - EM&C
CHIEF ENGINEERING OFFICER - B&B
CHIEF RAIL TRANSIT OFFICER
SYSTEM SAFETY
DIRECTOR OF ENGINEERING - B&B
MANAGER - ARCH / ENGINEERING
PROJECT MANAGER

HDR Engineering, Inc.
Philadelphia, PA

REV	DATE	DESCRIPTION	BY	CK'D	APP'D

DATE PRINTED: 10/21/2025

PARK
SUBWAY/ELEVATED TRAINS
TRACTION POWER SUBSTATION REHABILITATION
TRACTION POWER
EXIST MEZZ & FIRST FLOOR EQUIP PLANS

SCALE: NTS
SCALE FACTOR: -
DATE: 08/22/2025
DRAWN BY: ARG
CHECKED BY: BH
WORK ORDER NO.: 276482
SHEET NUMBER: **TP207**
DWG. NO.: 6 OF 35
SHT. NO.: 223 OF 453
ARCHIVE NO.:
COMPUTER FILE NO.: 17AN-TP207
REV. NO.: -

STATUS: 50% SUBMISSION

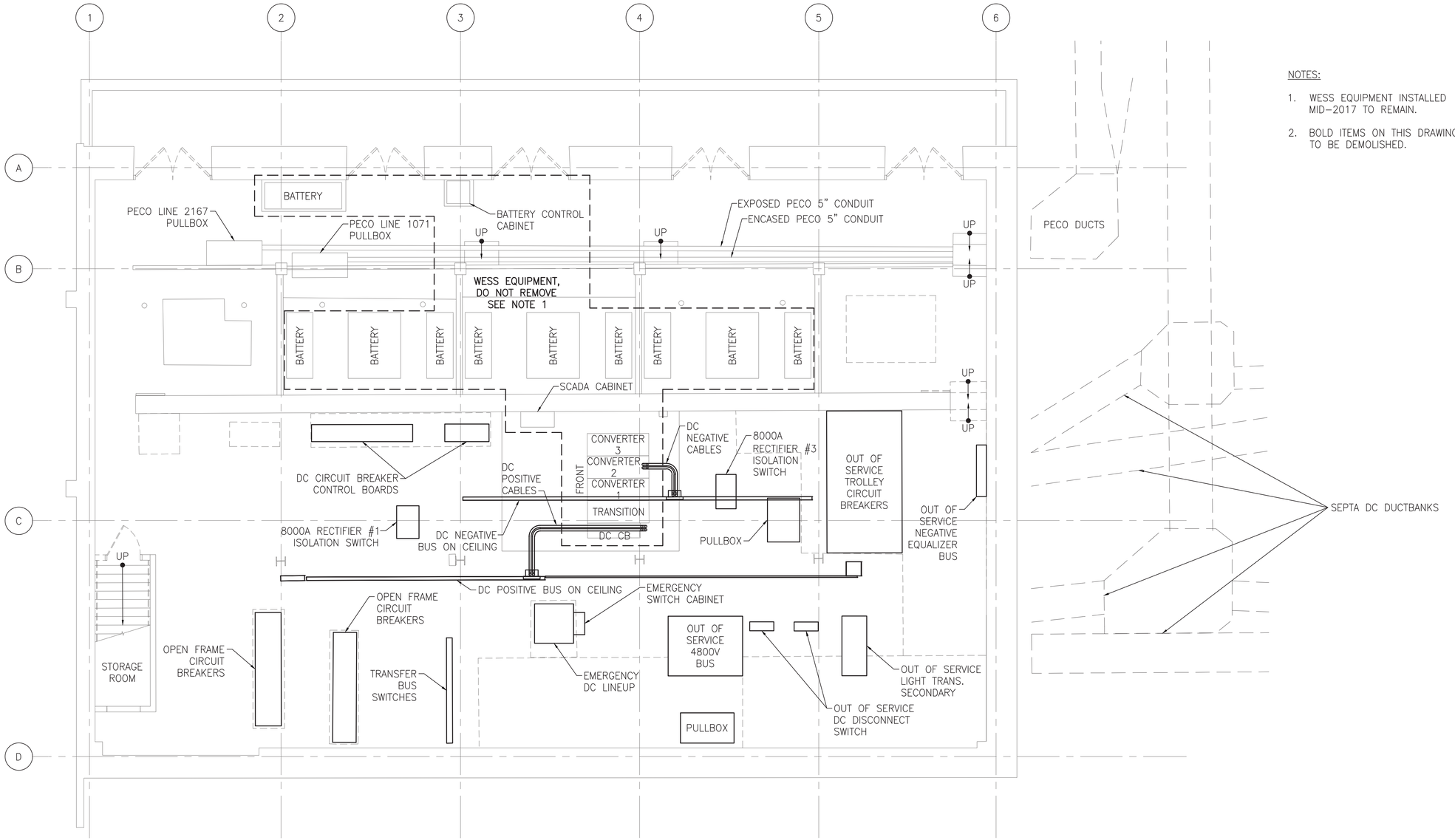

1 TP208 EXISTING BASEMENT EQUIPMENT PLAN

SCALE: 1" = 5'

NOTES:

1. WESS EQUIPMENT INSTALLED MID-2017 TO REMAIN.
2. BOLD ITEMS ON THIS DRAWING TO BE DEMOLISHED.

5 2.5 0 5

SCALE: 1"=5'

50% SUBMISSION
NOT FOR CONSTRUCTION

SOUTHEASTERN PENNSYLVANIA TRANSPORTATION AUTHORITY
EM&C DIVISION
1234 MARKET ST, 13TH FL.
PHILADELPHIA, PA 19107

CHIEF ENGINEER - EM&C

CHIEF ENGINEERING OFFICER - B&B

CHIEF RAIL TRANSIT OFFICER

SYSTEM SAFETY

DIRECTOR OF ENGINEERING - B&B

MANAGER - ARCH / ENGINEERING

PROJECT MANAGER

HDR Engineering, Inc.
Philadelphia, PA

REV	DATE	DESCRIPTION	BY	CK'D	APP'D

DATE PRINTED: 10/21/2025

PARK
SUBWAY/ELEVATED TRAINS
TRACTION POWER SUBSTATION REHABILITATION
TRACTION POWER
EXISTING BASEMENT EQUIPMENT PLAN

SCALE: AS SHOWN	SCALE FACTOR: -
DATE: 08/22/2025	DRAWN BY: MJB
	CHECKED BY: YL
WORK ORDER NO.: 276482	
SHEET NUMBER: **TP208**	
DWG. NO.: 7 OF 35	
SHT. NO.: 224 OF 453	
ARCHIVE NO.:	
COMPUTER FILE NO.: 17AN-TP208	REV. NO.: -

STATUS: 50% SUBMISSION

C:\PW\WORKING\PITTD\196154217AN-TP208.DWG

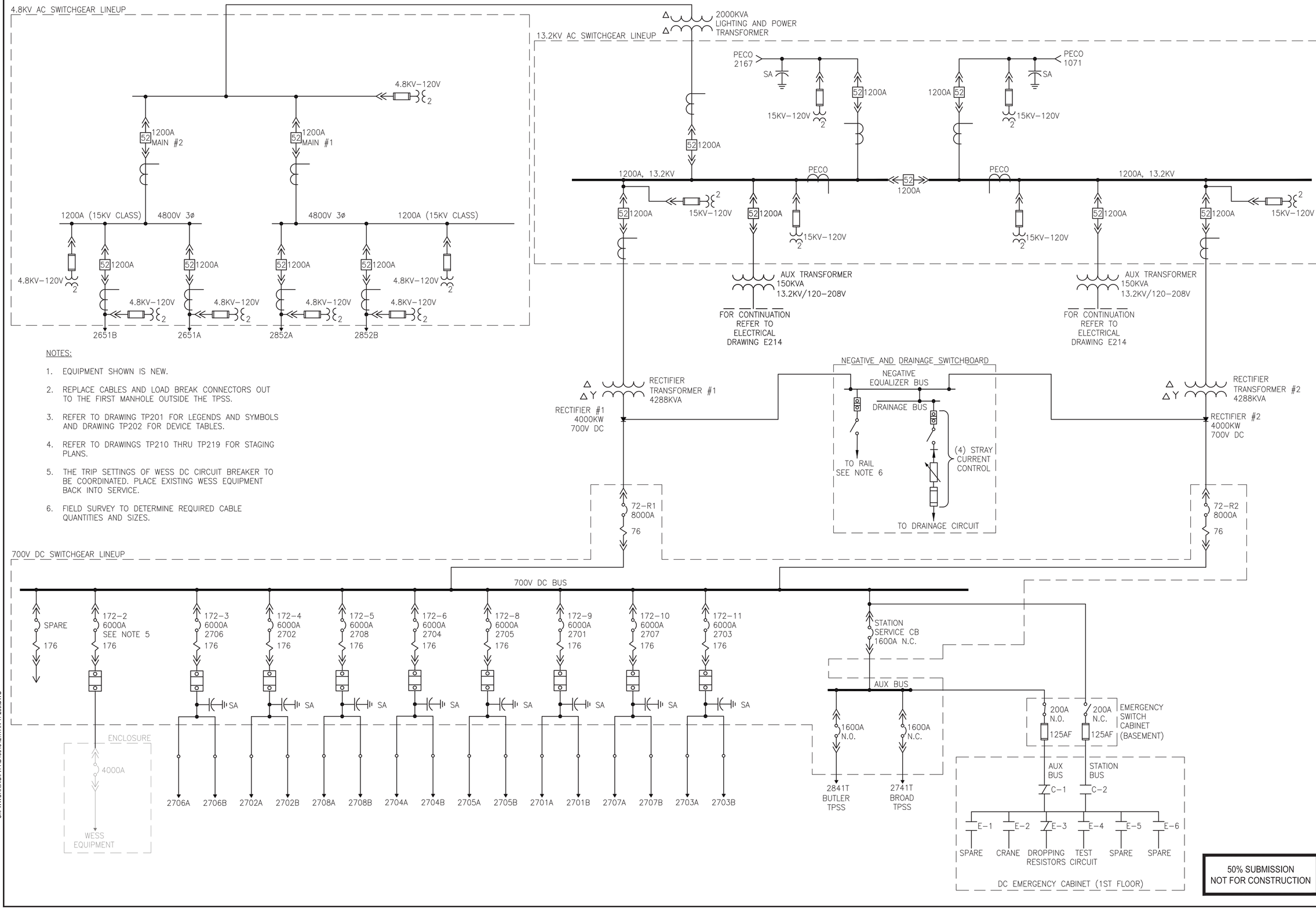

NOTES:

1. EQUIPMENT SHOWN IS NEW.
2. REPLACE CABLES AND LOAD BREAK CONNECTORS OUT TO THE FIRST MANHOLE OUTSIDE THE TPSS.
3. REFER TO DRAWING TP201 FOR LEGENDS AND SYMBOLS AND DRAWING TP202 FOR DEVICE TABLES.
4. REFER TO DRAWINGS TP210 THRU TP219 FOR STAGING PLANS.
5. THE TRIP SETTINGS OF WESS DC CIRCUIT BREAKER TO BE COORDINATED. PLACE EXISTING WESS EQUIPMENT BACK INTO SERVICE.
6. FIELD SURVEY TO DETERMINE REQUIRED CABLE QUANTITIES AND SIZES.

50% SUBMISSION
NOT FOR CONSTRUCTION

SOUTHEASTERN PENNSYLVANIA TRANSPORTATION AUTHORITY
EM&C DIVISION
1234 MARKET ST, 13TH FL.
PHILADELPHIA, PA 19107

CHIEF ENGINEER - EM&C
CHIEF ENGINEERING OFFICER - B&B
CHIEF RAIL TRANSIT OFFICER
SYSTEM SAFETY
DIRECTOR OF ENGINEERING - B&B
MANAGER - ARCH / ENGINEERING
PROJECT MANAGER

HDR Engineering, Inc.
Philadelphia, PA

REV	DATE	DESCRIPTION	BY	CK'D	APD

PARK
SUBWAY/ELEVATED TRAINS
TRACTION POWER SUBSTATION REHABILITATION
TRACTION POWER
PROPOSED SINGLE LINE DIAGRAM

SCALE: NTS
SCALE FACTOR: -
DATE: 08/22/2025
DRAWN BY: YL
CHECKED BY: BH
WORK ORDER NO.: 276482
SHEET NUMBER: **TP209**
DWG. NO.: 8 OF 35
SHT. NO.: 225 OF 453
ARCHIVE NO.:
COMPUTER FILE NO.: 17AN-TP209
REV. NO.: -

DATE PRINTED: 10/21/2025
STATUS: 50% SUBMISSION
C:\PWWORKING\PITT\D1961542\17AN-TP209.DWG

NOTES:

1. REMOVE INDICATES REMOVAL AND PROPER DISPOSAL OF EQUIPMENT AFTER SEPTA HAS SALVAGED PARTS THROUGHOUT CONTRACT.

OUTAGE TYPES:

1. SHORT TERM OUTAGES

   a. "RUSH TO RUSH" OUTAGES:

      THESE OUTAGES WILL OCCUR AS NEEDED BETWEEN 0900–1500.

   b. OVERNIGHT OUTAGES:

      OVERNIGHT OUTAGES WILL TAKE PLACE BETWEEN 0030–0430 MONDAY THROUGH FRIDAY.

STAGING NOTES:

1. REHABILITATION OF THE TPSS SHALL PROCEED IN STAGES. REMOVAL OF EXISTING AND INSTALLATION OF NEW EQUIPMENT SHALL BE SEQUENCED SO PART OF THE SUBSTATION SHALL BE AVAILABLE TO PROVIDE TRACTION POWER TO THE SYSTEM.
2. CONTRACTOR IS RESPONSIBLE FOR INSTALLATION OF ALL REQUIRED TEMPORARY CONTROL, BATTERY, OR POWER CABLES AND CONNECTIONS, AND ANY EQUIPMENT AND WORK FOR SEAMLESS TRANSFER OF OPERATIONS FROM EXISTING TO NEW EQUIPMENT AT NO ADDITIONAL COST TO SEPTA.
3. WORKERS CANNOT WORK WITHIN 15 FEET OF ENERGIZED CONDUCTORS UNLESS A PROTECTIVE BARRIER IS IN PLACE.
4. STAGING DRAWINGS ARE INTENDED TO COMPLEMENT THIS DRAWING SET. ALL WORK IS NOT NECESSARILY DISCUSSED IN THE STAGING PLANS. THE CONTRACTOR IS RESPONSIBLE FOR ALL WORK SHOWN ON THE DRAWINGS AND SPECIFICATIONS.
5. SURFACE PREPARATION AND PAINTING CAN BE PERFORMED AT ANY TIME UNLESS ELECTRICAL CLEARANCES REQUIRE OUTAGES. THE CONTRACTOR SHALL SUBMIT A PAINTING PLAN TO SEPTA FOR APPROVAL PRIOR TO SCHEDULING WORK. IN GENERAL, PAINTING IN THE VICINITY OF ELECTRICAL EQUIPMENT MUST BE COORDINATED WITH PLANNED ACTIVITIES IN AND AROUND THESE ITEMS. IT IS ANTICIPATED THAT "RUSH TO RUSH" AND WEEKEND OUTAGES WILL BE USED REGULARLY FOR PAINTING ACTIVITIES. IT IS SEPTA'S INTENT THAT PAINTING AROUND AND ABOVE EQUIPMENT SHALL TAKE PLACE PRIOR TO EQUIPMENT REPLACEMENT.
6. THE CONTRACTOR IS ENCOURAGED TO MODIFY OUTAGE SCHEDULE TO OPTIMIZE WORK. ANY REVISIONS MUST BE APPROVED BY SEPTA.

STAGING COORDINATION WITH BROAD STREET LINE TRACTION POWER SUBSTATIONS:

1. THE CONTRACTOR SHALL COORDINATE STAGING PLAN WITH OVERALL STAGING IN THIS CONTRACT. COORDINATION SHALL BE THROUGH SEPTA.

OPERATIONAL CONSTRAINTS DURING CONSTRUCTION:

1. AT LEAST ONE RECTIFIER UNIT SHALL REMAIN IN SERVICE AT ALL TIMES DURING REHABILITATION WORK, EXCEPT DURING SHORT TERM OUTAGES AS SHOWN ON THIS DRAWING.

STAGING ACTIVITIES:

STAGE 1 (DRAWINGS TP211 THRU TP213):

1. REMOVE OUT OF SERVICE EQUIPMENT.
2. INSTALL TEMPORARY PROTECTIVE BARRIERS AROUND EXISTING DC SWITCHGEAR.
3. DE–ENERGIZE AND REMOVE EXISTING RECTIFIER TRANSFORMER SET #3. DISCONNECT THIS SET FROM NEGATIVE EQUALIZER BUS. REMOVE EXISTING 8000A RECTIFIER #3 ISOLATION SWITCH IN THE BASEMENT.
4. DISCONNECT AND REMOVE EXISTING TROLLEY CIRCUIT BREAKERS IN THE BASEMENT.
5. INSTALL NEW NEGATIVE EQUALIZER BUS WITH NEW NEGATIVE AND DRAINAGE SWITCHBOARD.
6. TEMPORARY CONNECT EXISTING RECTIFIER TRANSFORMER SET #1 TO NEW NEGATIVE SYSTEM. CONNECT EXISTING WESS EQUIPMENT TO NEW NEGATIVE SYSTEM. REMOVE EXISTING NEGATIVE EQUALIZER BUS.
7. REMOVE EXISTING 112.5KVA, 13.2KV/120–208V AUXILIARY TRANSFORMER.
8. REMOVE EXISTING SECTION OF 13.2KV AC SWITCHGEAR, PECO INCOMING FEEDER 1071, RECTIFIER TRANSFORMER SET #3 FEEDER, AUXILIARY TRANSFORMER FEEDER AND BUS TIE.
9. REMOVE EXISTING EMERGENCY DC LINEUP IN BASEMENT.
10. REMOVE EXISTING SECTION OF 4.8KV AC SWITCHGEAR WITH FEEDERS 2661A, 2663A, 2862A, 2864A.
11. INSTALL NEW SECTION OF 13.2KV AC SWITCHGEAR TO FEED NEW RECTIFIER TRANSFORMER SET #2 AND NEW 150KVA AUXILIARY TRANSFORMER ON FIRST FLOOR. ENERGIZE THE NEW SWITCHGEAR SECTION FROM PECO FEEDER 1071.
12. INSTALL NEW TRANSFORMER RECTIFIER SET #2 WITH ALL REQUIRED INTERCONNECTIONS AND FEED IT FROM NEW SECTION OF 13.2KV AC SWITCHGEAR.
13. INSTALL AND ENERGIZE NEW 150KVA, 13.2KV/120–208V AUXILIARY TRANSFORMER.
14. INSTALL INSULATED FLOOR COVERING AND BUS WORK IN THE BASEMENT. INSTALL NEW SECTION OF DC SWITCHGEAR TO BE FED FROM NEW RECTIFIER TRANSFORMER SET #2. THIS SECTION SHALL INCLUDE DC FEEDER 2707, 2703, CATHODE BREAKER 72–R2, DC STATION SERVICE CB, AND EMERGENCY DC FEEDERS 2741T, 2841
15. PLACE THIS SECTION OF DC SWITCHGEAR IN SERVICE WITH NEW RECTIFIER SET #2.
16. TEMPORARY RELOCATE EXISTING BATTERY SET FROM EXISTING LOCATION.
17. COMPLETE THE BATTERY ROOM (SEE CIVIL DRAWINGS) AND INSTALL NEW BATTERY SET INSIDE THE ROOM. INSTALL EYE WASH AND BATTERY DISCONNECT SWITCH INSIDE THE ROOM.
18. INSTALL NEW BATTERY CHARGER AND NEW 125V DC DISTRIBUTION PANEL. TIE–IN ON THE TEMPORARY BASIS NEW AND EXISTING 125V DC BATTERY DISTRIBUTION PANELS. REMOVE EXISTING BATTERY SET WITH ASSOCIATED EQUIPMENT. THE EXISTING 125V DC BATTERY DISTRIBUTION PANEL SHALL REMAIN UNTIL ALL EXISTING CONTROL POWER CIRCUITS ARE TRANSFERRED TO THE NEW PANEL.
19. INSTALL NEW RTU/HMI EQUIPMENT. INSTALL CONTROL POWER AND RTU/HMI INTERCONNECTIONS, TEST IT AND CUT–OVER. DO NOT DISTURB THE EXISTING RTU AND CONNECTIONS TO EXISTING EQUIPMENT THAT REMAINS OPERATIONAL.
20. REMOVE EXISTING EMERGENCY SWITCH CABINET AND EXISTING DC EMERGENCY CABINET. INSTALL NEW EMERGENCY SWITCH CABINET AND NEW DC EMERGENCY CABINET.
21. FIELD SURVEY AND PROVIDE FINAL DESIGN FOR THE REPLACEMENT OF THE DC REMOTE CONTROL PANEL (CABINET).

STAGE 2 (DRAWING TP214 THRU TP216):

1. REMOVE EXISTING DC CIRCUIT BREAKERS FROM BASEMENT.
2. REMOVE EXISTING TRANSFER BUS SWITCHES FROM BASEMENT.
3. REMOVE EXISTING DC CIRCUIT BREAKER CONTROL BOARDS.
4. DE–ENERGIZE AND REMOVE FROM SERVICE EXISTING RECTIFIER TRANSFORMER SET #1.
5. REMOVE EXISTING 8000A RECTIFIER #1 ISOLATION SWITCH.
6. DE–ENERGIZE PECO FEEDER 2167 AND REMOVE REMAINING SECTION OF EXISTING 13.2KV AC SWITCHGEAR.
7. DE–ENERGIZE AND REMOVE EXISTING 2000KVA LIGHTING AND POWER TRANSFORMER.
8. OPEN EXISTING 4.8KV AC SWITCHGEAR CIRCUIT BREAKER MAIN #1 AND REMOVE IT FROM CUBICLE. MAINTAIN THE SECTION OF 4.8KV BUS WITH FEEDERS 2852A AND 2852B FOR BACK FEED TO EXISTING 4.8KV/120–208V AUXILIARY TRANSFORMER.
9. INSTALL NEW SECTION OF 13.2KV MV SWITCHGEAR AND RECONNECT AND ENERGIZED PECO FEEDER 2167.
10. INSTALL SECOND NEW 150KVA, 13.2KV/120–208V AUXILIARY TRANSFORMERS AND CONNECT TRANSFORMER TO NEW 13.2KV SWITCHGEAR.
11. INSTALL NEW RECTIFIER TRANSFORMER SET #1 WITH ALL REQUIRED INTERCONNECTIONS.
12. INSTALL NEW SECTION OF DC SWITCHGEAR WITH CONNECTION TO NEW RECTIFIER TRANSFORMER SET #1. THE SECTION SHALL INCLUDE DC FEEDERS 2706, 2702, 2708, 2704, 2705, 2701, 72–R1, AND WESS EQUIPMENT.
13. INSTALL NEW 2000KVA LIGHTING AND POWER TRANSFORMER AND NEW SECTION OF 4.8KV SWITCHGEAR INCLUDING MAIN #2, BREAKERS 2651A, 2651B.
14. RECONNECT WESS EQUIPMENT TO NEW 700V DC SWITCHGEAR.

STAGE 3 (DRAWING TP217 THRU TP219):

1. REMOVE EXISTING AND INSTALL REMAINING SECTION OF NEW 4.8KV AC SWITCHGEAR INCLUDING MAIN #1 BREAKER AND BREAKERS 2852A, 2852B.
2. REMOVE EXISTING 112.5KVA, 4.8KV/120–208V AUXILIARY TRANSFORMER.
3. REMOVE EXISTING RTU AND SCADA CABINETS.

50% SUBMISSION
NOT FOR CONSTRUCTION

SOUTHEASTERN PENNSYLVANIA TRANSPORTATION AUTHORITY
EM&C DIVISION
1234 MARKET ST, 13TH FL.
PHILADELPHIA, PA 19107

CHIEF ENGINEER - EM&C
CHIEF ENGINEERING OFFICER - B&B
CHIEF RAIL TRANSIT OFFICER
SYSTEM SAFETY
DIRECTOR OF ENGINEERING - B&B
MANAGER - ARCH / ENGINEERING
PROJECT MANAGER

HDR Engineering, Inc.
Philadelphia, PA

REV	DATE	DESCRIPTION	BY	CKD	APD

DATE PRINTED: 10/21/2025

PARK
SUBWAY/ELEVATED TRAINS
TRACTION POWER SUBSTATION REHABILITATION
TRACTION POWER
STAGING ACTIVITIES & NOTES

SCALE: NTS | SCALE FACTOR: -
DATE: 08/22/2025 | DRAWN BY: ARG | CHECKED BY: YL
WORK ORDER NO.: 276482
SHEET NUMBER: **TP210**
DWG. NO.: 9 OF 35
SHT. NO.: 226 OF 453
ARCHIVE NO.:
COMPUTER FILE NO.: 17AN-TP210 | REV. NO.: -

STATUS: 50% SUBMISSION

C:\PWWORKING\PITTD\19615421\17AN-TP210.DWG

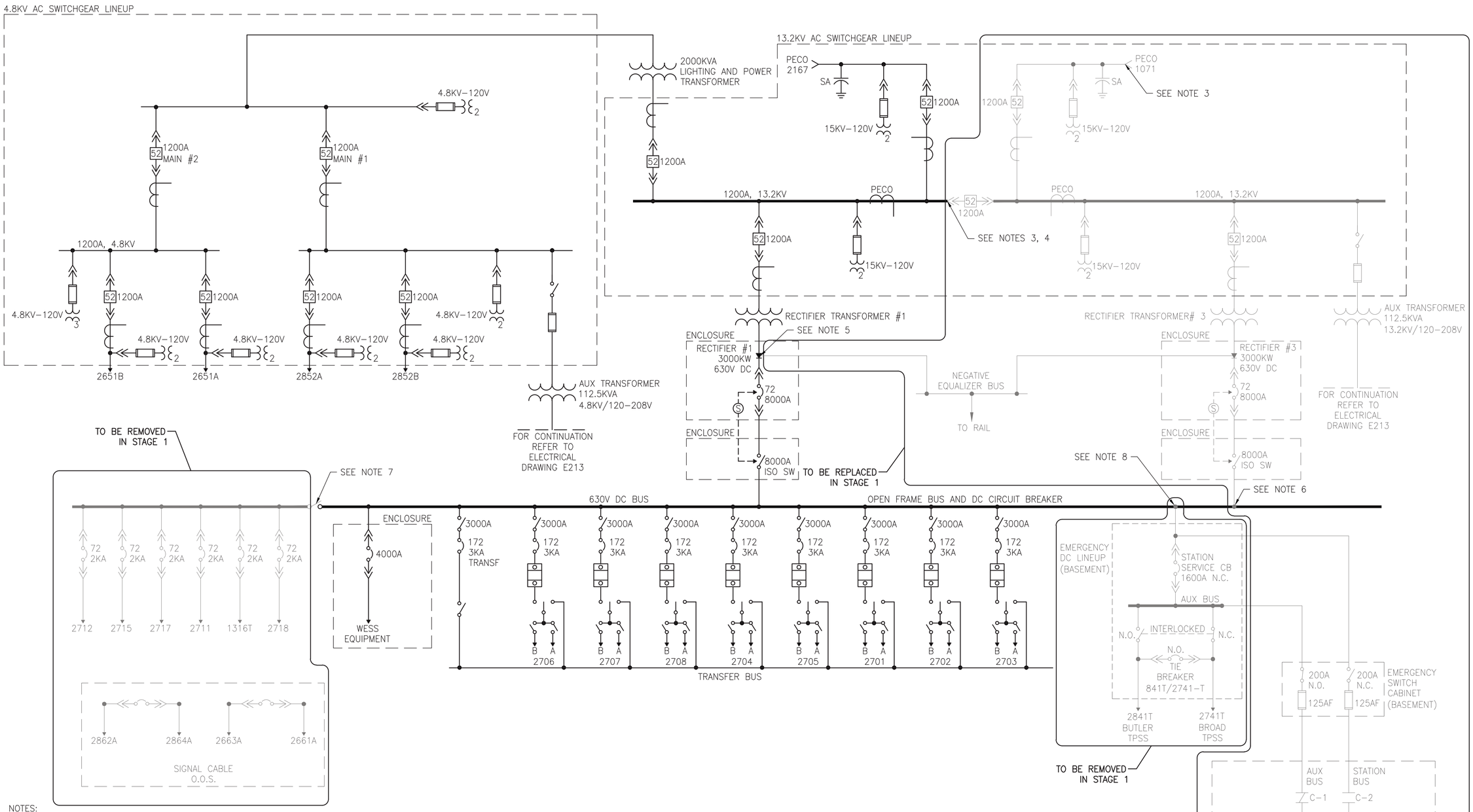

NOTES:

1. BOLD ITEMS ON THIS DRAWING TO BE ENERGIZED DURING STAGE 1.
2. GRAYSCALE ITEMS ON THIS DRAWINGS TO BE DE–ENERGIZED DURING STAGE 1.
3. DISCONNECT PECO FEEDER 1071 FROM EXISTING 13.2KV AC SWITCHGEAR. REMOVE SECTION OF EXISTING 13.2KV SWITCHGEAR AS SHOWN INCLUDING BUS TIE BREAKER. INSTALL NEW SECTION OF 13.2KV SWITCHGEAR AND RECONNECT PECO FEEDER 1071 TO NEW SECTION.
4. DISCONNECT BUS TIE CIRCUIT BREAKER FROM EXISTING 13.2KV BUS.
5. INSTALL NEW NEGATIVE AND DRAINAGE SWITCHBOARD. DISCONNECT NEGATIVE CONNECTION FROM EXISTING RECTIFIER #1 AND TEMPORARY CONNECT EXISTING RECTIFIER #1 TO NEW NEGATIVE AND DRAINAGE SWITCHBOARD.
6. DE–ENERGIZE AND REMOVE RECTIFIER TRANSFORMER SET #3. INSTALL NEW RECTIFIER TRANSFORMER SET #2 IN ITS PLACE AND CONNECT IT TO NEW 13.2KV SWITCHGEAR SECTION. CONNECT SET #2 TO NEW NEGATIVE AND DRAINAGE SWITCHBOARD.
7. OPEN AND LOCK OUT EXISTING DISCONNECT SWITCH, REMOVE EXISTING O/S TROLLEY CIRCUIT BREAKERS.
8. DISCONNECT CONDUCTORS AND REMOVE EMERGENCY DC LINEUP.
9. INSTALL NEW SECTION OF DC SWITCHGEAR AND CONNECT IT TO RECTIFIER TRANSFORMER SET #2.
10. REMOVE EXISTING 112.5KVA, 13.2KV/120–208V AUXILIARY TRANSFORMER. INSTALL NEW 150KVA, 13.2KV/120–208V AUXILIARY TRANSFORMER ON THE FIRST FLOOR AND ENERGIZE IT FROM NEW SECTION OF 13.2KV SWITCHGEAR.
11. REMOVE EXISTING AND INSTALL NEW EMERGENCY SWITCH CABINET AND DC EMERGENCY CABINET.
12. REFER TO DRAWING TP201 FOR LEGENDS AND SYMBOLS AND DRAWING TP202 FOR DEVICE TABLES.
13. REFER TO DRAWING TP210 FOR OVERALL STAGING PLAN.

50% SUBMISSION
NOT FOR CONSTRUCTION

SOUTHEASTERN PENNSYLVANIA TRANSPORTATION AUTHORITY
EM&C DIVISION
1234 MARKET ST, 13TH FL.
PHILADELPHIA, PA 19107

CHIEF ENGINEER - EM&C
CHIEF ENGINEERING OFFICER - B&B
CHIEF RAIL TRANSIT OFFICER
SYSTEM SAFETY
DIRECTOR OF ENGINEERING - B&B
MANAGER - ARCH / ENGINEERING
PROJECT MANAGER

HDR Engineering, Inc.
Philadelphia, PA

REV	DATE	DESCRIPTION	BY	CKD	APD

DATE PRINTED: 10/21/2025

PARK
SUBWAY/ELEVATED TRAINS
TRACTION POWER SUBSTATION REHABILITATION
TRACTION POWER
STAGE 1 SINGLE LINE DIAGRAM

SCALE: NTS	SCALE FACTOR: -
DATE: 08/22/2025	DRAWN BY: YL
	CHECKED BY: VS
WORK ORDER NO.: 276482	
SHEET NUMBER: **TP211**	
DWG. NO.: 10 OF 35	
SHT. NO.: 227 OF 453	
ARCHIVE NO.:	
COMPUTER FILE NO.: 17AN-TP211	REV. NO.: -

STATUS: 50% SUBMISSION

C:\PW\WORKING\PITTD\19615421\7AN-TP211.DWG

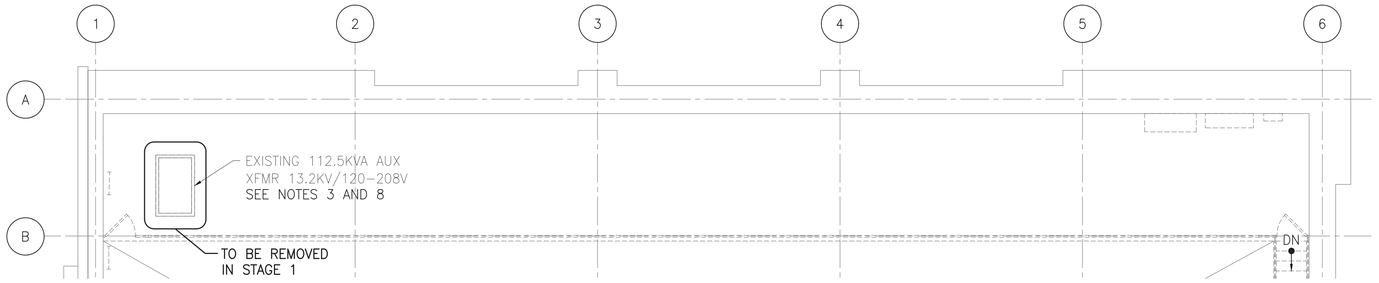

1 TP212 STAGE 1 MEZZANINE EQUIPMENT PLANS

SCALE: 1" = 5'

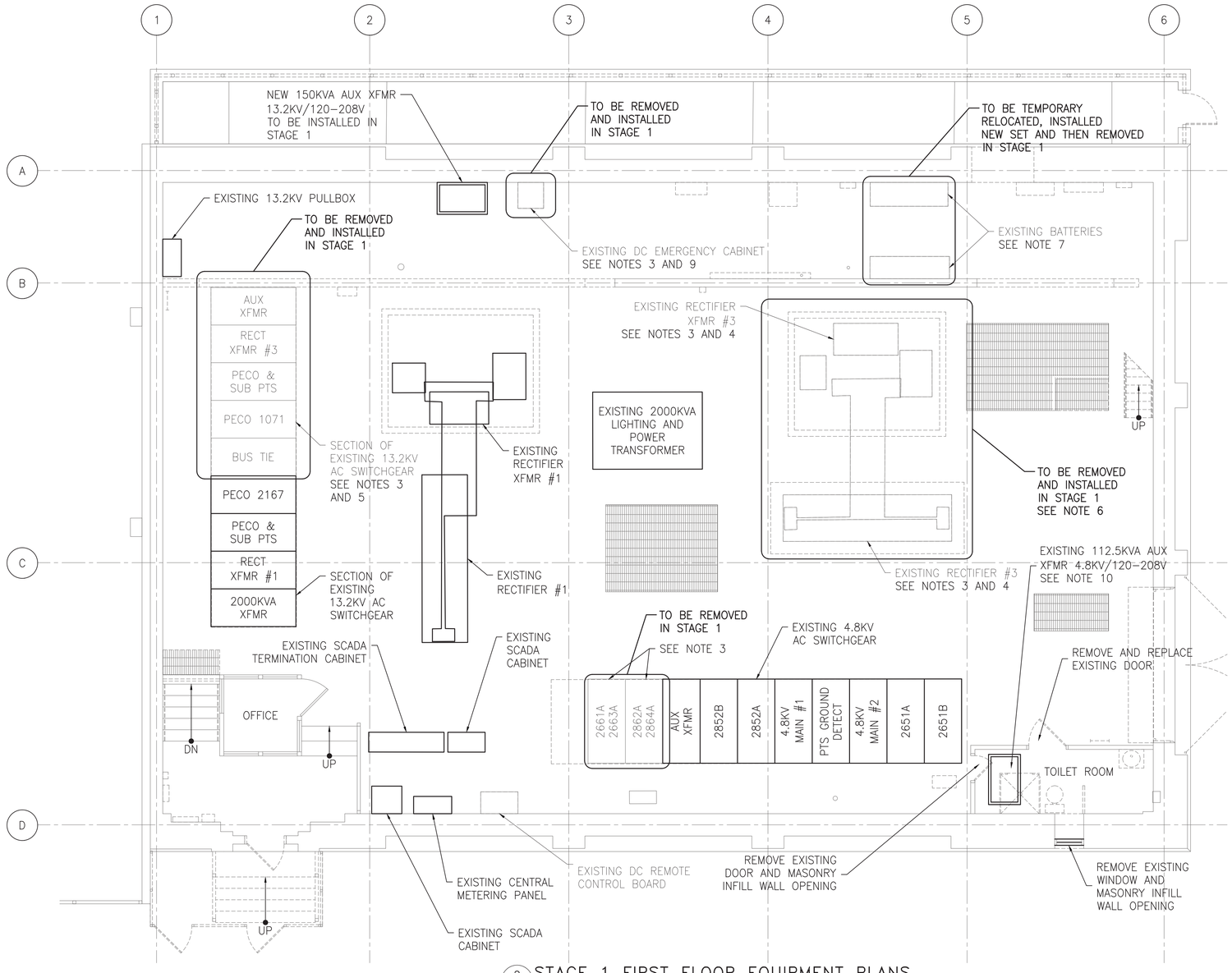

2 TP212 STAGE 1 FIRST FLOOR EQUIPMENT PLANS

SCALE: 1" = 5'

NOTES:

1. GRAYSCALE ITEMS ON THIS DRAWING TO BE DE-ENERGIZED DURING STAGE 1.
2. BOLD ITEMS ON THIS DRAWING TO BE ENERGIZED DURING STAGE 1.
3. REMOVE EQUIPMENT AFTER SEPTA HAS SALVAGED PARTS.
4. REMOVE EXISTING RECTIFIER TRANSFORMER SET #3.
5. REMOVE PECO INCOMING FEEDER 1071, SECTION OF EXISTING 13.2KV AC SWITCHGEAR. INSTALL NEW SECTION OF 13.2KV AC SWITCHGEAR AND RECONNECT PECO FEEDER 1071.
6. INSTALL NEW RECTIFIER TRANSFORMER SET #2 AND CONNECT IT TO NEW SECTION OF 700V DC SWITCHGEAR IN BASEMENT AND NEW 13.2KV SWITCHGEAR.
7. REPLACE EXISTING BATTERIES AND ASSOCIATED EQUIPMENT. FOR DETAILS SEE STAGE 1 ON DWG. TP210.
8. REMOVE EXISTING 112.5KVA 13.2KV/120-208V AUXILIARY TRANSFORMER LOCATED ON MEZZANINE AND INSTALL NEW 150KVA 13.2KV/120-208V AUXILIARY TRANSFORMER ON THE FIRST FLOOR.
9. REMOVE EXISTING DC EMERGENCY CABINET AND INSTALL NEW DC EMERGENCY CABINET.
10. EXISTING 112.5KVA AUXILIARY TRANSFORMER IS LOCATED ABOVE TOILET ROOM.
11. REFER TO DRAWING TP210 FOR OVERALL STAGING PLAN.
12. REMOVE EXISTING INSULATED FLOOR COVERING. PROVIDE NEW INSULATED FLOOR COVERING CONFORMING TO THE SPECIFICATIONS.

5 2.5 0 5

SCALE: 1"=5'

50% SUBMISSION
NOT FOR CONSTRUCTION

SOUTHEASTERN PENNSYLVANIA TRANSPORTATION AUTHORITY
EM&C DIVISION
1234 MARKET ST, 13TH FL.
PHILADELPHIA, PA 19107

CHIEF ENGINEER - EM&C
CHIEF ENGINEERING OFFICER - B&B
CHIEF RAIL TRANSIT OFFICER
SYSTEM SAFETY
DIRECTOR OF ENGINEERING - B&B
MANAGER - ARCH / ENGINEERING
PROJECT MANAGER

HDR
HDR Engineering, Inc.
Philadelphia, PA

REV	DATE	DESCRIPTION	BY	CK'D	APP'D

DATE PRINTED: 10/21/2025

PARK
SUBWAY/ELEVATED TRAINS
TRACTION POWER SUBSTATION REHABILITATION
TRACTION POWER
STAGE 1 MEZZANINE & FIRST FLOOR EQUIP PLANS

SCALE: NTS	SCALE FACTOR: -
DATE: 08/22/2025	DRAWN BY: MB
WORK ORDER NO.: 276482	CHECKED BY: YL
SHEET NUMBER: **TP212**	
DWG. NO.: 11 OF 35	
SHT. NO.: 228 OF 453	
ARCHIVE NO.:	
COMPUTER FILE NO.: 17AN-TP212	REV. NO.: -

STATUS: 50% SUBMISSION

C:\PWWORKING\PITTDI\96154217AN-TP212.DWG

NOTES:

1. GRAYSCALE ITEMS ON THIS DRAWING TO BE DE-ENERGIZED DURING STAGE 1.
2. BOLD ITEMS ON THIS DRAWING TO BE ENERGIZED DURING STAGE 1.
3. INSTALL TEMPORARY PROTECTIVE BARRIERS AROUND EXISTING DC EQUIPMENT.
4. REMOVE EQUIPMENT AFTER SEPTA HAS SALVAGED PARTS.
5. INSTALL NEW NEGATIVE AND DRAINAGE SWITCHBOARD. TEMPORARY CONNECT TRANSFORMER RECTIFIER SET #1 TO NEW NEGATIVE SWITCHBOARD. CONNECT EXISTING WESS EQUIPMENT TO NEW NEGATIVE SWITCHBOARD. REMOVE EXISTING NEGATIVE EQUALIZER BUS.
6. REMOVE EXISTING EMERGENCY SWITCH CABINET AND INSTALL NEW EMERGENCY SWITCH CABINET IN ANOTHER LOCATION (SEE TP216).
7. REMOVE EXISTING 8000A RECTIFIER #3 ISOLATION SWITCH.
8. INSTALL NEW SECTION OF 700V DC SWITCHGEAR. CONNECT NEW EMERGENCY SWITCH CABINET TO NEW DC SECTION. CONNECT NEW DC FEEDER BREAKERS 2707 AND 2703 TO TRACKS.
9. REMOVE EXISTING EMERGENCY DC LINEUP.
10. REMOVE EXISTING INSULATED FLOOR COVERING. PROVIDE NEW INSULATED FLOOR COVERING CONFORMING TO THE SPECIFICATIONS.
11. WESS EQUIPMENT INSTALLED MID-2017 TO REMAIN.
12. REFER TO DRAWING TP210 FOR OVERALL STAGING PLAN.

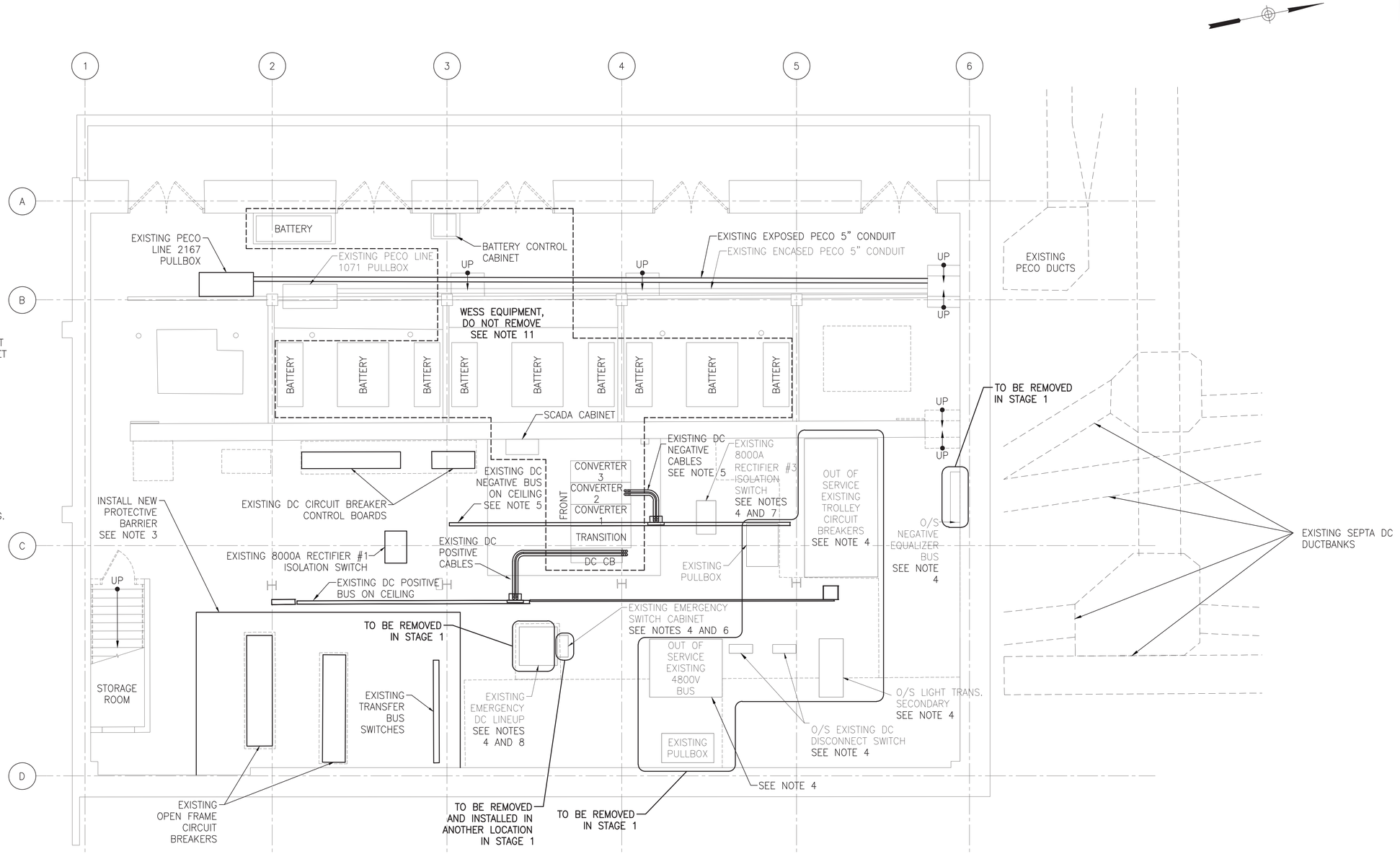

1 TP213 STAGE 1 BASEMENT EQUIPMENT PLAN

SCALE: 1" = 5'

5 2.5 0 5

SCALE: 1"=5'

50% SUBMISSION
NOT FOR CONSTRUCTION

C:\PW\WORKING\PITTD\196154217AN-TP213.DWG

SOUTHEASTERN PENNSYLVANIA TRANSPORTATION AUTHORITY
EM&C DIVISION
1234 MARKET ST, 13TH FL.
PHILADELPHIA, PA 19107

CHIEF ENGINEER - EM&C
CHIEF ENGINEERING OFFICER - B&B
CHIEF RAIL TRANSIT OFFICER
SYSTEM SAFETY
DIRECTOR OF ENGINEERING - B&B
MANAGER - ARCH / ENGINEERING
PROJECT MANAGER

HDR Engineering, Inc.
Philadelphia, PA

REV	DATE	DESCRIPTION	BY	CK'D	APP'D

DATE PRINTED: 10/21/2025

PARK
SUBWAY/ELEVATED TRAINS
TRACTION POWER SUBSTATION REHABILITATION
TRACTION POWER
STAGE 1 BASEMENT EQUIPMENT PLAN

SCALE: AS SHOWN
SCALE FACTOR: -
DATE: 08/22/2025
DRAWN BY: MB
CHECKED BY: YL
WORK ORDER NO.: 276482
SHEET NUMBER: **TP213**
DWG. NO.: 12 OF 35
SHT. NO.: 229 OF 453
ARCHIVE NO.:
COMPUTER FILE NO.: 17AN-TP213
REV. NO.: -

STATUS: 50% SUBMISSION

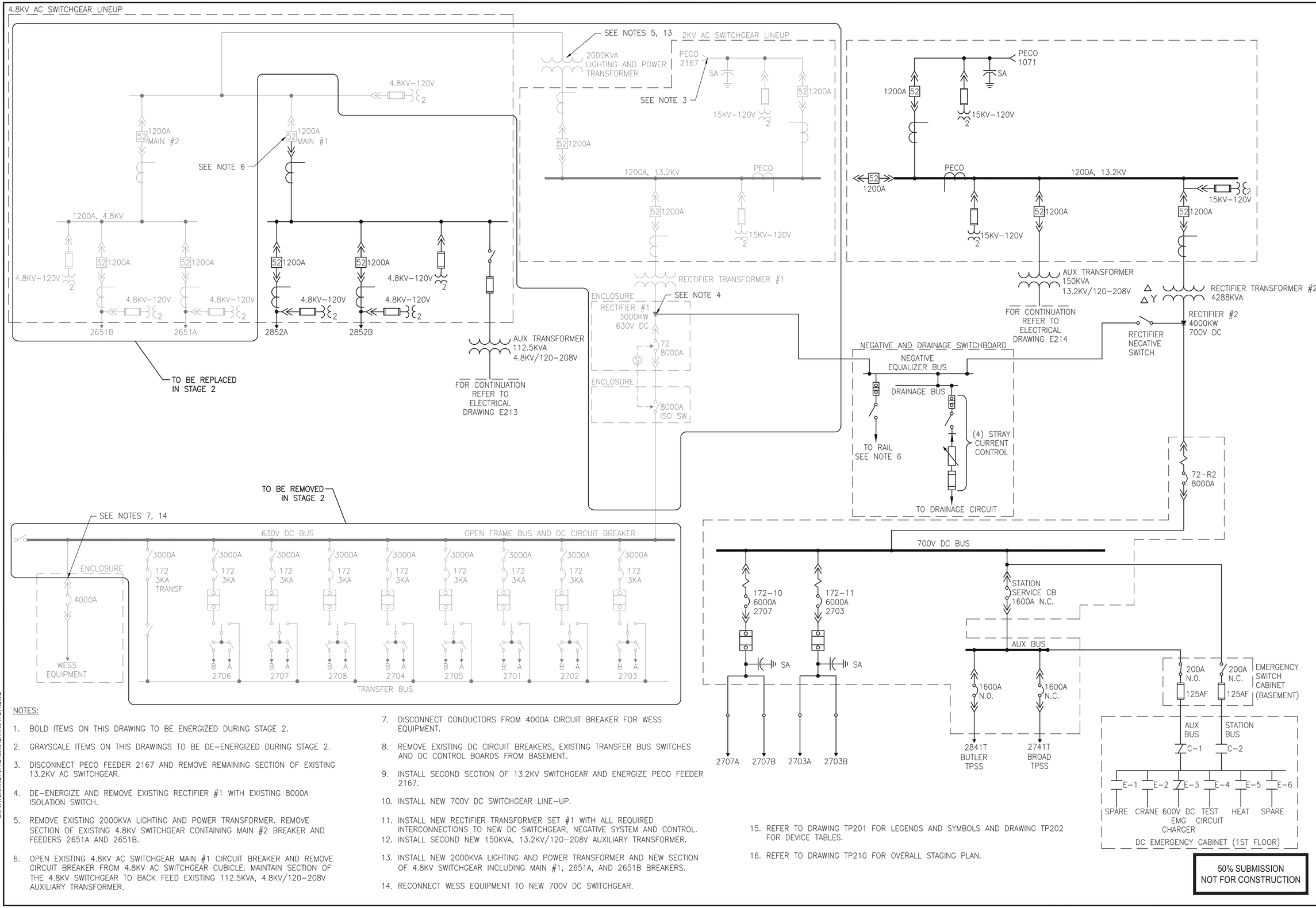

NOTES:

1. BOLD ITEMS ON THIS DRAWING TO BE ENERGIZED DURING STAGE 2.
2. GRAYSCALE ITEMS ON THIS DRAWINGS TO BE DE–ENERGIZED DURING STAGE 2.
3. DISCONNECT PECO FEEDER 2167 AND REMOVE REMAINING SECTION OF EXISTING 13.2KV AC SWITCHGEAR.
4. DE–ENERGIZE AND REMOVE EXISTING RECTIFIER #1 WITH EXISTING 8000A ISOLATION SWITCH.
5. REMOVE EXISTING 2000KVA LIGHTING AND POWER TRANSFORMER. REMOVE SECTION OF EXISTING 4.8KV SWITCHGEAR CONTAINING MAIN #2 BREAKER AND FEEDERS 2651A AND 2651B.
6. OPEN EXISTING 4.8KV AC SWITCHGEAR MAIN #1 CIRCUIT BREAKER AND REMOVE CIRCUIT BREAKER FROM 4.8KV AC SWITCHGEAR CUBICLE. MAINTAIN SECTION OF THE 4.8KV SWITCHGEAR TO BACK FEED EXISTING 112.5KVA, 4.8KV/120–208V AUXILIARY TRANSFORMER.
7. DISCONNECT CONDUCTORS FROM 4000A CIRCUIT BREAKER FOR WESS EQUIPMENT.
8. REMOVE EXISTING DC CIRCUIT BREAKERS, EXISTING TRANSFER BUS SWITCHES AND DC CONTROL BOARDS FROM BASEMENT.
9. INSTALL SECOND SECTION OF 13.2KV SWITCHGEAR AND ENERGIZE PECO FEEDER 2167.
10. INSTALL NEW 700V DC SWITCHGEAR LINE–UP.
11. INSTALL NEW RECTIFIER TRANSFORMER SET #1 WITH ALL REQUIRED INTERCONNECTIONS TO NEW DC SWITCHGEAR, NEGATIVE SYSTEM AND CONTROL.
12. INSTALL SECOND NEW 150KVA, 13.2KV/120–208V AUXILIARY TRANSFORMER.
13. INSTALL NEW 2000KVA LIGHTING AND POWER TRANSFORMER AND NEW SECTION OF 4.8KV SWITCHGEAR INCLUDING MAIN #1, 2651A, AND 2651B BREAKERS.
14. RECONNECT WESS EQUIPMENT TO NEW 700V DC SWITCHGEAR.
15. REFER TO DRAWING TP201 FOR LEGENDS AND SYMBOLS AND DRAWING TP202 FOR DEVICE TABLES.
16. REFER TO DRAWING TP210 FOR OVERALL STAGING PLAN.

50% SUBMISSION
NOT FOR CONSTRUCTION

SOUTHEASTERN PENNSYLVANIA TRANSPORTATION AUTHORITY
EM&C DIVISION
1234 MARKET ST, 13TH FL.
PHILADELPHIA, PA 19107

CHIEF ENGINEER - EM&C
CHIEF ENGINEERING OFFICER - B&B
CHIEF RAIL TRANSIT OFFICER
SYSTEM SAFETY
DIRECTOR OF ENGINEERING - B&B
MANAGER - ARCH / ENGINEERING
PROJECT MANAGER

HDR Engineering, Inc.
Philadelphia, PA

REV	DATE	DESCRIPTION	BY	CK'D	APD

DATE PRINTED: 10/21/2025

PARK
SUBWAY/ELEVATED TRAINS
TRACTION POWER SUBSTATION REHABILITATION
TRACTION POWER
STAGE 2 SINGLE LINE DIAGRAM

SCALE: NTS	SCALE FACTOR: -
DATE: 08/22/2025	DRAWN BY: YL
	CHECKED BY: VS
WORK ORDER NO.: 276482	
SHEET NUMBER: **TP214**	
DWG. NO.: 13 OF 35	
SHT. NO.: 230 OF 453	
ARCHIVE NO.:	
COMPUTER FILE NO.: 17AN-TP214	REV. NO.: -

STATUS: 50% SUBMISSION

C:\PWWORKING\PITTD1961542\17AN-TP214.DWG

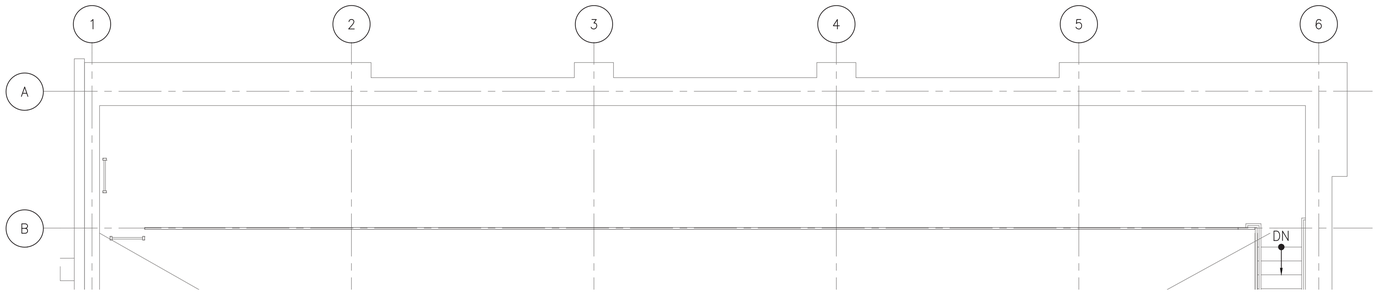

1 TP215 STAGE 2 MEZZANINE EQUIPMENT PLANS
SCALE: 1" = 5'

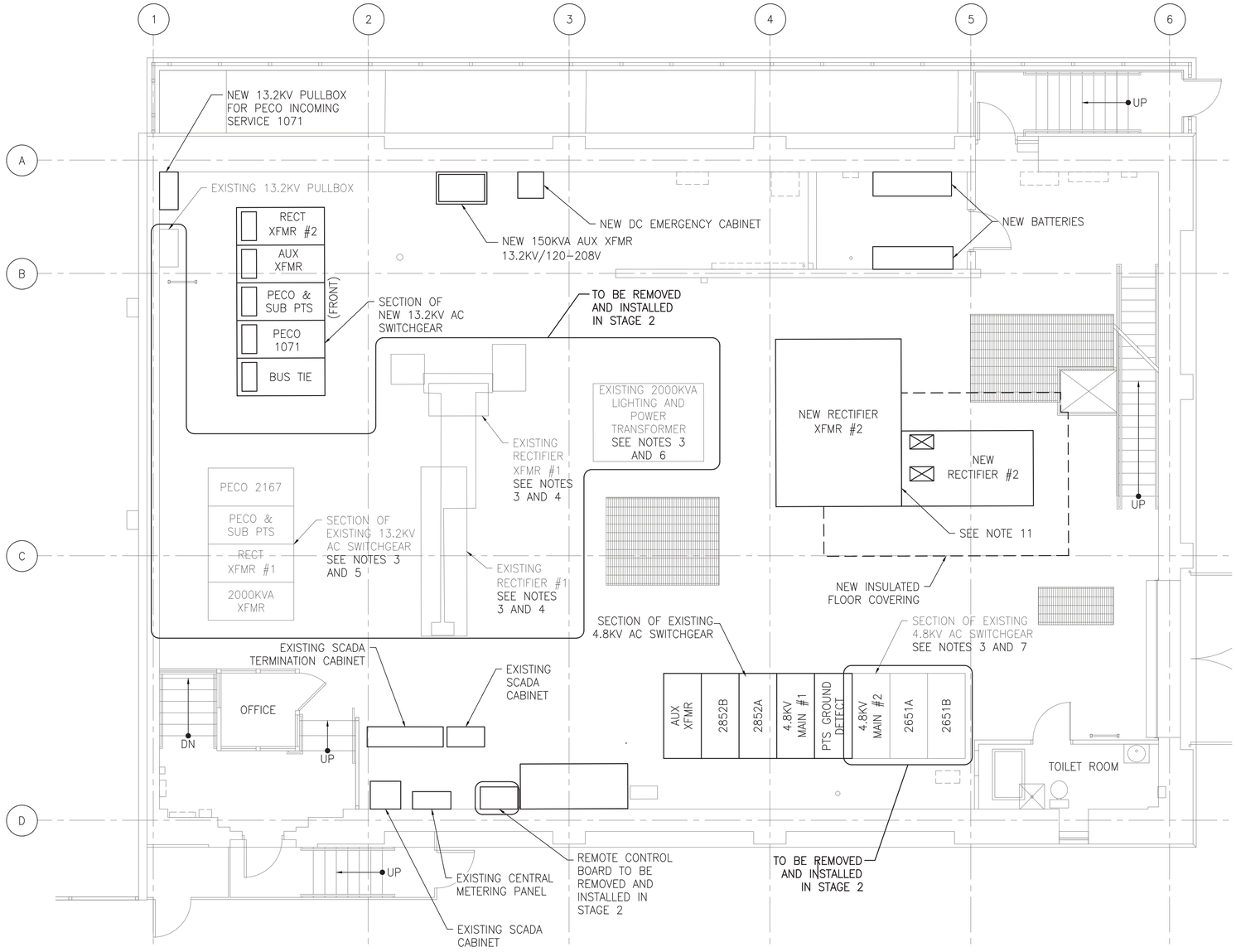

2 TP215 STAGE 2 FIRST FLOOR EQUIPMENT PLANS
SCALE: 1" = 5'

NOTES:

1. GRAYSCALE ITEMS ON THIS DRAWING TO BE DE-ENERGIZED DURING STAGE 2.
2. BOLD ITEMS ON THIS DRAWING TO BE ENERGIZED DURING STAGE 2.
3. REMOVE EQUIPMENT AFTER SEPTA HAS SALVAGED PARTS.
4. REMOVE EXISTING RECTIFIER TRANSFORMER SET #1. INSTALL NEW RECTIFIER TRANSFORMER SET #1 AND CONNECT TO NEW 700V DC SWITCHGEAR IN BASEMENT.
5. DE-ENERGIZE PECO FEEDER 2167, REMOVE SECTION OF EXISTING 13.2KV AC SWITCHGEAR. INSTALL NEW SECTION OF 13.2KV AC SWITCHGEAR AND RECONNECT THE PECO FEEDER 2167.
6. REMOVE EXISTING 2000KVA LIGHTING AND POWER TRANSFORMER AND INSTALL NEW 2000KVA LIGHTING AND POWER TRANSFORMER. FOR NEW TRANSFORMER LOCATION SEE DWG. TP220.
7. REMOVE SECTION OF EXISTING 4.8KV AC SWITCHGEAR. INSTALL NEW SECTION OF 4.8KV AC SWITCHGEAR.
8. INSTALL SECOND 150KVA, 13.2KV/120-208V AUXILIARY TRANSFORMER ON THE FIRST FLOOR. FOR NEW LOCATION SEE DWG. TP220.
9. REFER TO DRAWING TP210 FOR OVERALL STAGING PLAN.
10. REMOVE EXISTING INSULATED FLOOR COVERING. PROVIDE NEW INSULATED FLOOR COVERING CONFORMING TO THE SPECIFICATIONS.
11. THE CONTRACTOR TO PROVIDE AN INSULATING BARRIER BETWEEN THE NEW RECTIFIER AND THE NEW RECTIFIER TRANSFORMER.

5 2.5 0 5
SCALE: 1"=5'

50% SUBMISSION
NOT FOR CONSTRUCTION

SOUTHEASTERN PENNSYLVANIA TRANSPORTATION AUTHORITY
EM&C DIVISION
1234 MARKET ST, 13TH FL.
PHILADELPHIA, PA 19107

CHIEF ENGINEER - EM&C
CHIEF ENGINEERING OFFICER - B&B
CHIEF RAIL TRANSIT OFFICER
SYSTEM SAFETY
DIRECTOR OF ENGINEERING - B&B
MANAGER - ARCH / ENGINEERING
PROJECT MANAGER

HDR
HDR Engineering, Inc.
Philadelphia, PA

REV	DATE	DESCRIPTION	BY	CK'D	APP'D

DATE PRINTED: 10/21/2025

PARK
SUBWAY/ELEVATED TRAINS
TRACTION POWER SUBSTATION REHABILITATION
TRACTION POWER
STAGE 2 MEZZANINE & FIRST FLOOR EQUIP PLANS

SCALE: NTS	SCALE FACTOR: -
DATE: 08/22/2025	DRAWN BY: YL
	CHECKED BY: VS
WORK ORDER NO.: 276482	
SHEET NUMBER: **TP215**	
DWG. NO.: 14 OF 35	
SHT. NO.: 231 OF 453	
ARCHIVE NO.:	
COMPUTER FILE NO.: 17AN-TP215	REV. NO.: -

STATUS: 50% SUBMISSION

C:\PW\WORKING\PITTD\19615421\7AN-TP215.DWG

NOTES:

1. GRAYSCALE ITEMS ON THIS DRAWING TO BE DE-ENERGIZED DURING STAGE 2.
2. BOLD ITEMS ON THIS DRAWING TO BE ENERGIZED DURING STAGE 2.
3. REMOVE EQUIPMENT AFTER SEPTA HAS SALVAGED PARTS.
4. REMOVE EXISTING 8000A RECTIFIER #1 ISOLATION SWITCH.
5. REMOVE EXISTING DC CIRCUIT BREAKER CONTROL BOARDS.
6. REMOVE EXISTING TRANSFER BUS SWITCHES AND EXISTING OPEN FRAME DC CIRCUIT BREAKERS.
7. REMOVE PROTECTIVE BARRIER.
8. REMOVE EXISTING CEILING MOUNTED POSITIVE BUS AND POSITIVE CONNECTIONS. NEGATIVE BUS WAS REMOVED IN STAGE 1.
9. INSTALL NEW SECTION OF 700V DC SWITCHGEAR. REMOVE CONNECTIONS FROM EXISTING 630V DC EQUIPMENT AND MAKE NEW CONNECTIONS TO NEW SECTION OF 700V DC SWITCHGEAR.
10. CONNECT NEW TRANSFORMER RECTIFIER SET #1 TO NEW 700V DC SWITCHGEAR. CONNECT EXISTING WESS EQUIPMENT TO NEW DC SWITCHGEAR.
11. REFER TO DRAWING TP210 FOR OVERALL STAGING PLAN.

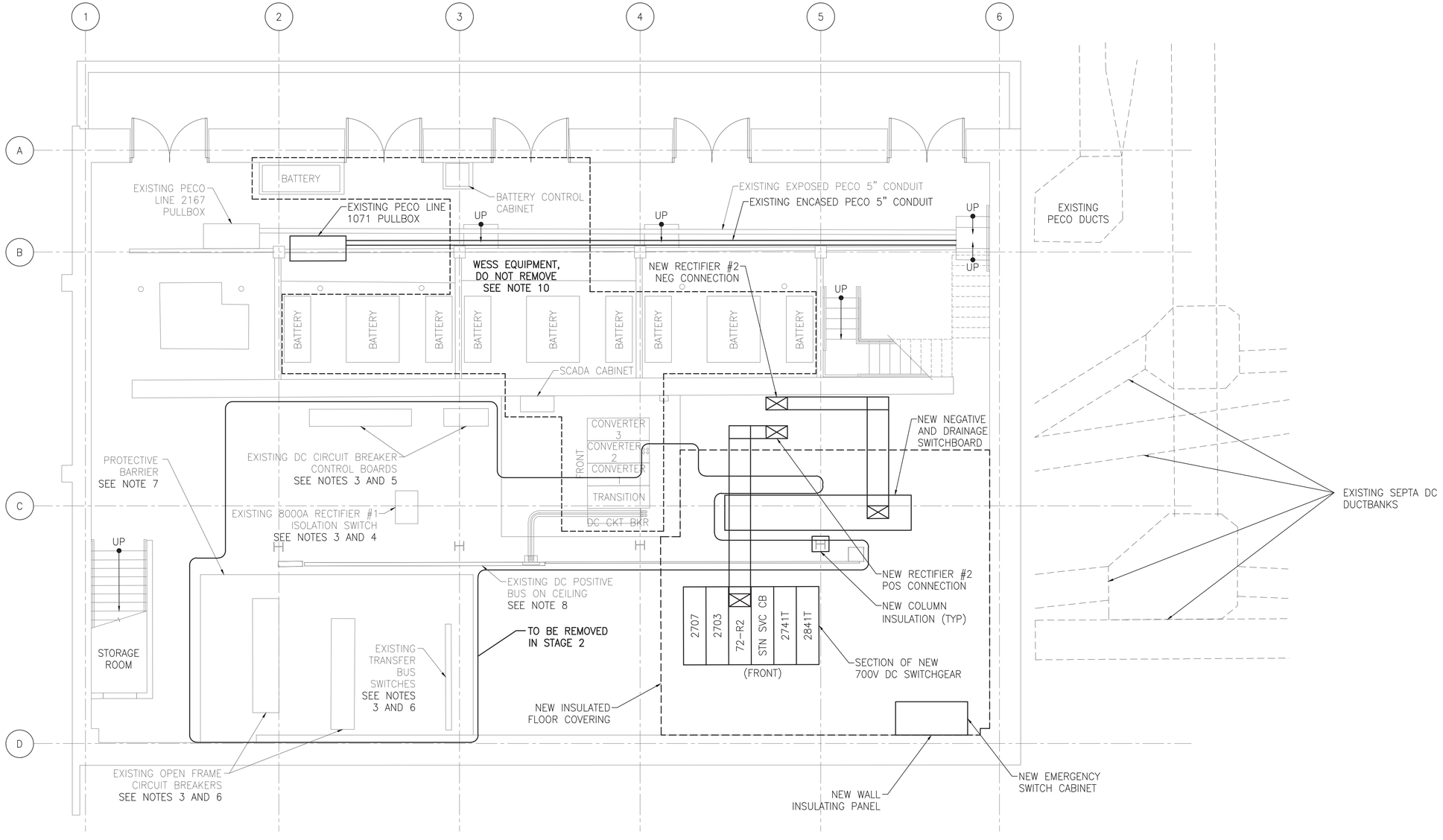

1 / TP216 STAGE 2 BASEMENT EQUIPMENT PLAN

SCALE: 1" = 5'

5 2.5 0 5

SCALE: 1"=5'

50% SUBMISSION
NOT FOR CONSTRUCTION

C:\PWWORKING\PITTIO1\96154217\AN-TP216.DWG

SOUTHEASTERN PENNSYLVANIA TRANSPORTATION AUTHORITY
EM&C DIVISION
1234 MARKET ST, 13TH FL.
PHILADELPHIA, PA 19107

CHIEF ENGINEER - EM&C
CHIEF ENGINEERING OFFICER - B&B
CHIEF RAIL TRANSIT OFFICER
SYSTEM SAFETY
DIRECTOR OF ENGINEERING - B&B
MANAGER - ARCH / ENGINEERING
PROJECT MANAGER

HDR Engineering, Inc.
Philadelphia, PA

REV	DATE	DESCRIPTION	BY	CK'D	APP'D

DATE PRINTED: 10/21/2025

PARK
SUBWAY/ELEVATED TRAINS
TRACTION POWER SUBSTATION REHABILITATION
TRACTION POWER
STAGE 2 BASEMENT EQUIPMENT PLAN

SCALE: AS SHOWN	SCALE FACTOR: -
DATE: 08/22/2025	DRAWN BY: YL
	CHECKED BY: VS
WORK ORDER NO.: 276482	
SHEET NUMBER: **TP216**	
DWG. NO.: 15 OF 35	
SHT. NO.: 232 OF 453	
ARCHIVE NO.:	
COMPUTER FILE NO.: 17AN-TP216	REV. NO.: -

STATUS: 50% SUBMISSION

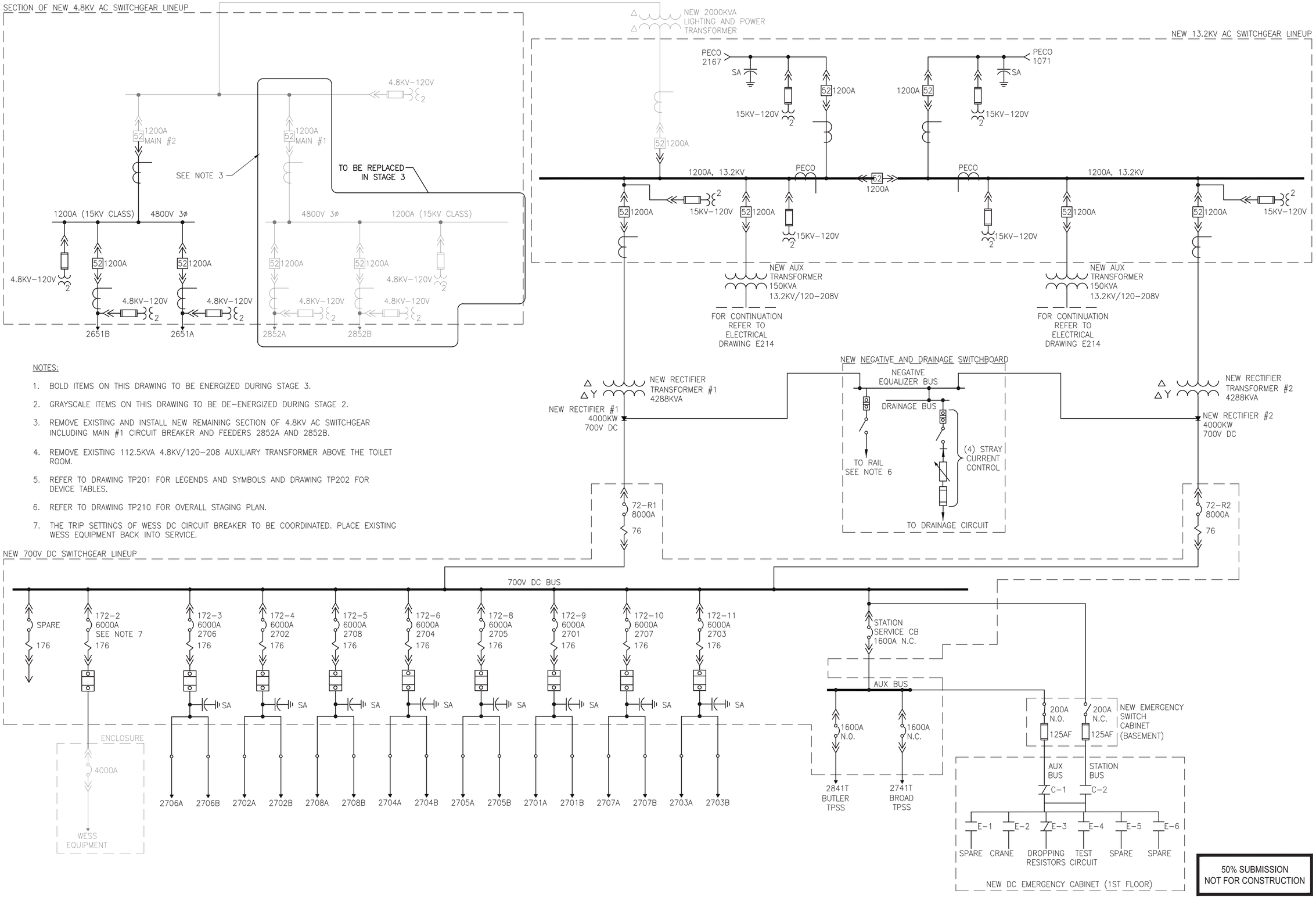

NOTES:

1. BOLD ITEMS ON THIS DRAWING TO BE ENERGIZED DURING STAGE 3.
2. GRAYSCALE ITEMS ON THIS DRAWING TO BE DE–ENERGIZED DURING STAGE 2.
3. REMOVE EXISTING AND INSTALL NEW REMAINING SECTION OF 4.8KV AC SWITCHGEAR INCLUDING MAIN #1 CIRCUIT BREAKER AND FEEDERS 2852A AND 2852B.
4. REMOVE EXISTING 112.5KVA 4.8KV/120–208 AUXILIARY TRANSFORMER ABOVE THE TOILET ROOM.
5. REFER TO DRAWING TP201 FOR LEGENDS AND SYMBOLS AND DRAWING TP202 FOR DEVICE TABLES.
6. REFER TO DRAWING TP210 FOR OVERALL STAGING PLAN.
7. THE TRIP SETTINGS OF WESS DC CIRCUIT BREAKER TO BE COORDINATED. PLACE EXISTING WESS EQUIPMENT BACK INTO SERVICE.

50% SUBMISSION
NOT FOR CONSTRUCTION

SOUTHEASTERN PENNSYLVANIA TRANSPORTATION AUTHORITY
EM&C DIVISION
1234 MARKET ST, 13TH FL.
PHILADELPHIA, PA 19107

CHIEF ENGINEER - EM&C
CHIEF ENGINEERING OFFICER - B&B
CHIEF RAIL TRANSIT OFFICER
SYSTEM SAFETY
DIRECTOR OF ENGINEERING - B&B
MANAGER - ARCH / ENGINEERING
PROJECT MANAGER

HDR Engineering, Inc.
Philadelphia, PA

REV	DATE	DESCRIPTION	BY	CK'D	APD

DATE PRINTED: 10/21/2025

PARK
SUBWAY/ELEVATED TRAINS
TRACTION POWER SUBSTATION REHABILITATION
TRACTION POWER
STAGE 3 SINGLE LINE DIAGRAM

SCALE: NTS	SCALE FACTOR: -
DATE: 08/22/2025	DRAWN BY: YL
	CHECKED BY: YS
WORK ORDER NO.: 276482	
SHEET NUMBER: **TP217**	
DWG. NO.: 16 OF 35	
SHT. NO.: 233 OF 453	
ARCHIVE NO.:	
COMPUTER FILE NO.: 17AN-TP217	REV. NO.: -

STATUS: 50% SUBMISSION

C:\PWWORKING\PITTD1961542\17AN-TP217.DWG

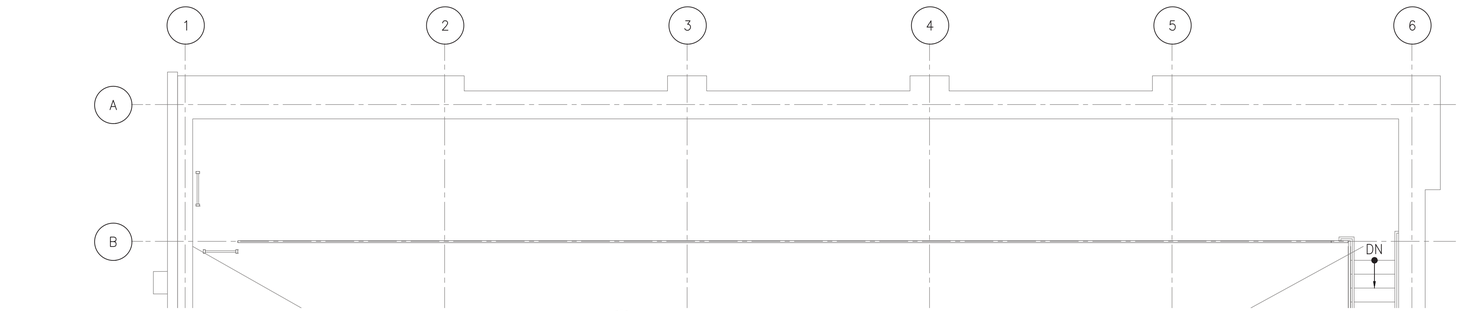

1 TP218 STAGE 3 MEZZANINE EQUIPMENT PLANS
SCALE: 1" = 5'

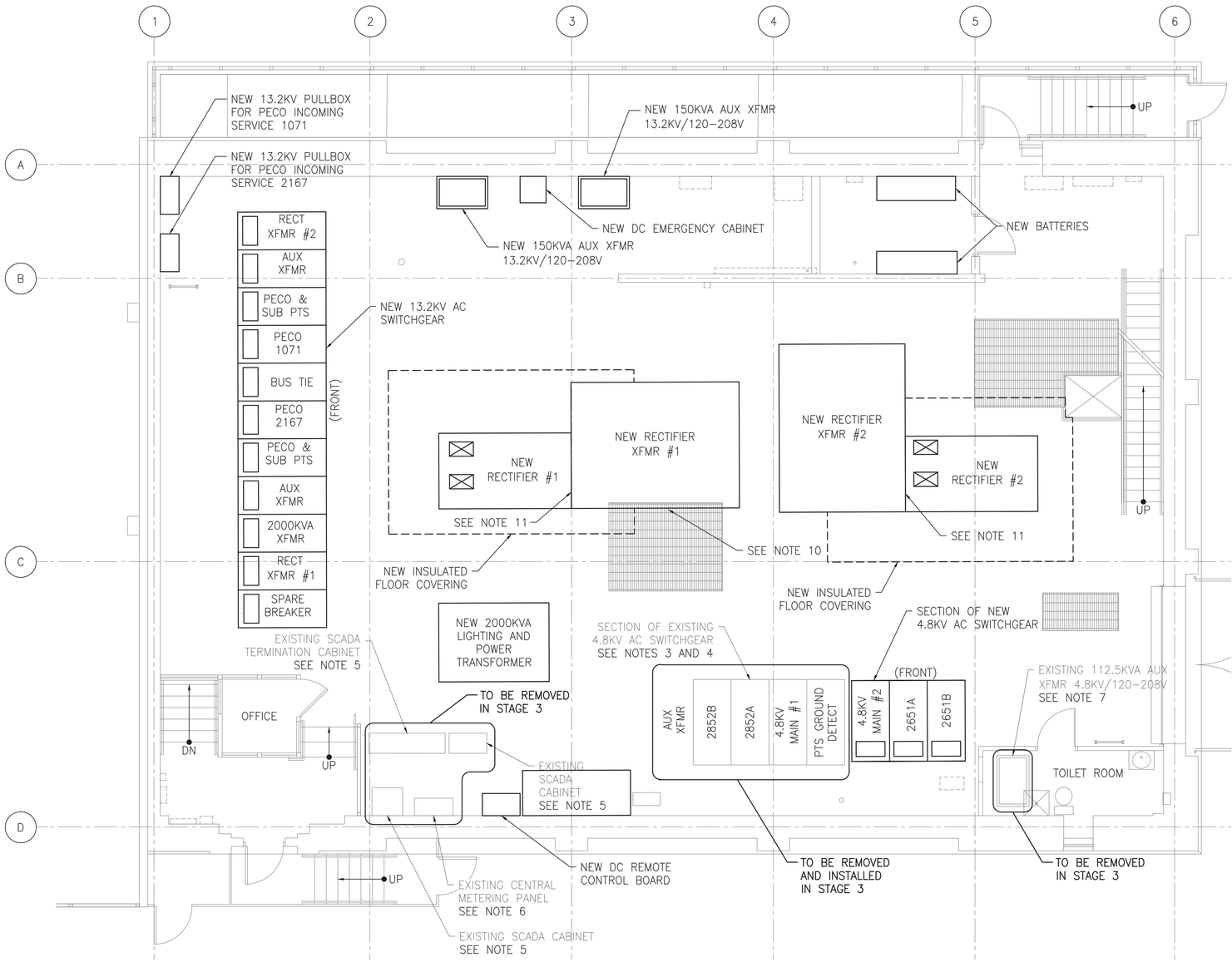

2 TP218 STAGE 3 FIRST FLOOR EQUIPMENT PLANS
SCALE: 1" = 5'

NOTES:

1. GRAYSCALE ITEMS ON THIS DRAWING TO BE DE-ENERGIZED DURING STAGE 3.
2. BOLD ITEMS ON THIS DRAWING TO BE ENERGIZED DURING STAGE 3.
3. REMOVE EQUIPMENT AFTER SEPTA HAS SALVAGED PARTS.
4. REMOVE SECTION OF EXISTING 4.8KV AC SWITCHGEAR. INSTALL NEW SECTION OF 4.8KV AC SWITCHGEAR.
5. REMOVE EXISTING SCADA AND SCADA TERMINATION CABINETS.
6. REMOVE EXISTING CENTRAL METERING PANEL.
7. REMOVE EXISTING 112.5KVA 4.8KV/120-208V AUXILIARY TRANSFORMER LOCATED ABOVE TOILET ROOM.
8. INSTALL NEW RTU/HMI CABINET.
9. REFER TO DRAWING TP210 FOR OVERALL STAGING PLAN.
10. THE CONTRACTOR TO PROVIDE A DESIGN FOR A REDUCED SIZE GRATE IN ORDER FOR THE INSTALLATION OF NEW RECTIFIER TRANSFORMER SET #1 AND INSULATED FLOOR COVERING.
11. THE CONTRACTOR TO PROVIDE AN INSULATING BARRIER BETWEEN THE NEW RECTIFIER AND NEW RECTIFIER TRANSFORMER.

5 2.5 0 5
SCALE: 1"=5'

50% SUBMISSION
NOT FOR CONSTRUCTION

SOUTHEASTERN PENNSYLVANIA TRANSPORTATION AUTHORITY
EM&C DIVISION
1234 MARKET ST, 13TH FL.
PHILADELPHIA, PA 19107

CHIEF ENGINEER - EM&C
CHIEF ENGINEERING OFFICER - B&B
CHIEF RAIL TRANSIT OFFICER
SYSTEM SAFETY
DIRECTOR OF ENGINEERING - B&B
MANAGER - ARCH / ENGINEERING
PROJECT MANAGER

HDR Engineering, Inc.
Philadelphia, PA

REV	DATE	DESCRIPTION	BY	CKD	APD

DATE PRINTED: 10/21/2025

PARK
SUBWAY/ELEVATED TRAINS
TRACTION POWER SUBSTATION REHABILITATION
TRACTION POWER
STAGE 3 MEZZ & FIRST FLOOREQUIPMENT PLANS

SCALE: AS SHOWN	SCALE FACTOR: -
DATE: 08/22/2025	DRAWN BY: YL
	CHECKED BY: VS
WORK ORDER NO.: 276482	
SHEET NUMBER: **TP218**	
DWG. NO.: 17 OF 35	
SHT. NO.: 234 OF 453	
ARCHIVE NO.:	
COMPUTER FILE NO.: 17AN-TP218	REV. NO.: -

STATUS: 50% SUBMISSION

C:\PW\WORKING\PITTD\19615421\17AN-TP218.DWG

NOTES:

1. GRAYSCALE ITEMS ON THIS DRAWING TO BE DE-ENERGIZED DURING STAGE 3.
2. BOLD ITEMS ON THIS DRAWING TO BE ENERGIZED DURING STAGE 3.
3. REMOVE EQUIPMENT AFTER SEPTA HAS SALVAGED PARTS.
4. DOTTED LINES DEMARCATE WESS EQUIPMENT.
5. REFER TO DRAWING TP210 FOR OVERALL STAGING PLAN.

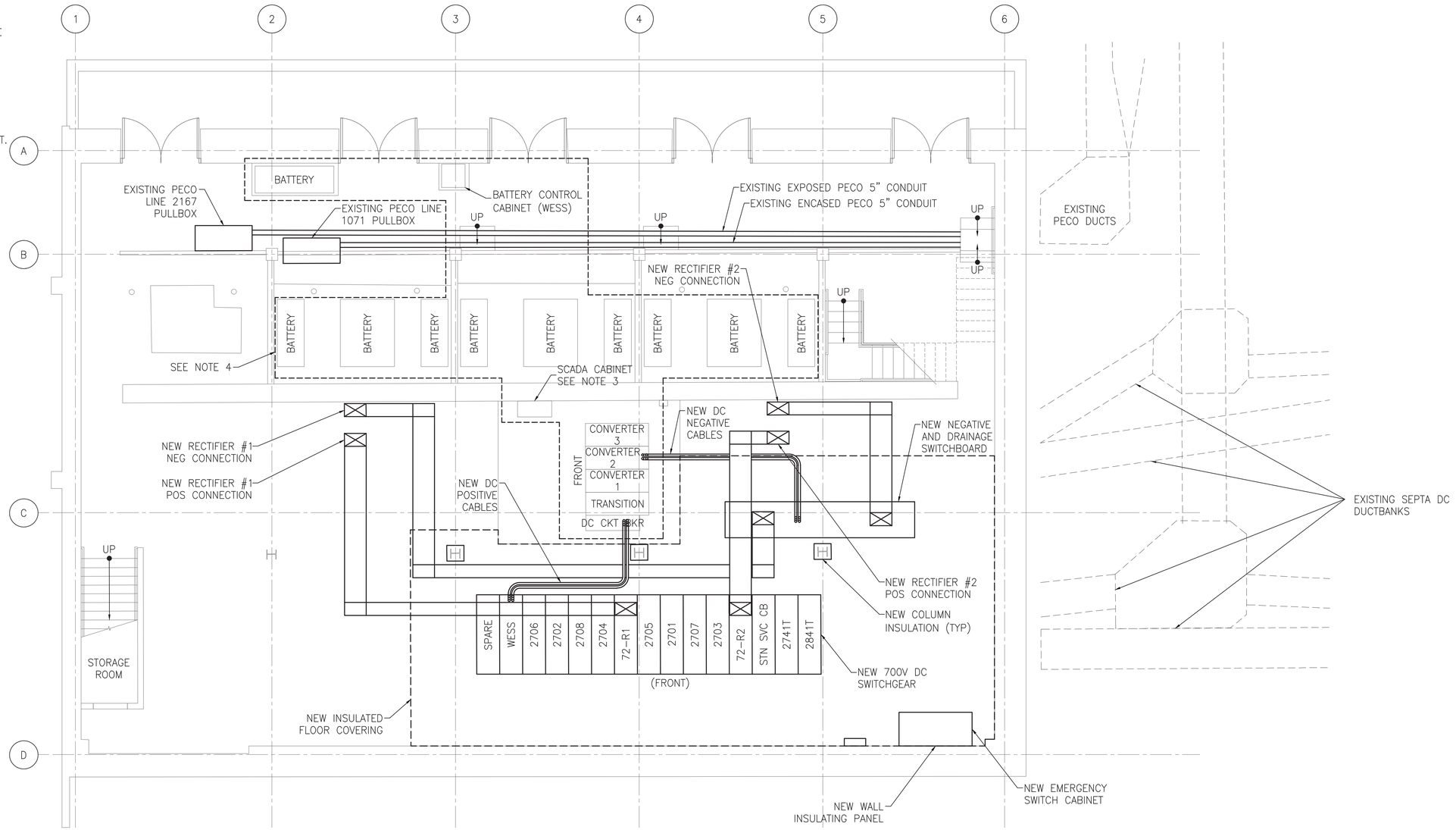

1 / TP219 STAGE 3 BASEMENT EQUIPMENT PLAN
SCALE: 1" = 5'

5 2.5 0 5
SCALE: 1"=5'

50% SUBMISSION
NOT FOR CONSTRUCTION

SOUTHEASTERN PENNSYLVANIA TRANSPORTATION AUTHORITY
EM&C DIVISION
1234 MARKET ST, 13TH FL.
PHILADELPHIA, PA 19107

CHIEF ENGINEER - EM&C
CHIEF ENGINEERING OFFICER - B&B
CHIEF RAIL TRANSIT OFFICER
SYSTEM SAFETY
DIRECTOR OF ENGINEERING - B&B
MANAGER - ARCH / ENGINEERING
PROJECT MANAGER

HDR
HDR Engineering, Inc.
Philadelphia, PA

REV	DATE	DESCRIPTION	BY	CK'D	APP'D

DATE PRINTED: 10/21/2025

PARK
SUBWAY/ELEVATED TRAINS
TRACTION POWER SUBSTATION REHABILITATION
TRACTION POWER
STAGE 3 BASEMENT EQUIPMENT PLAN

SCALE: AS SHOWN	SCALE FACTOR: -
DATE: 08/22/2025	DRAWN BY: YL / CHECKED BY: VS
WORK ORDER NO.: 276482	
SHEET NUMBER: **TP219**	
DWG. NO.: 18 OF 35	
SHT. NO.: 235 OF 453	
ARCHIVE NO.:	
COMPUTER FILE NO.: 17AN-TP219	REV. NO.: -

STATUS: 50% SUBMISSION

C:\PWWORKING\PITTD\19815421\7AN-TP219.DWG

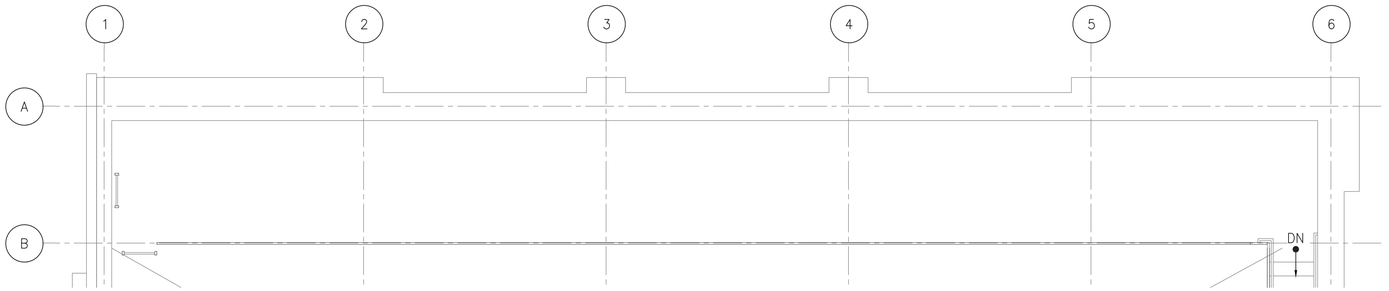

1 TP220 PROPOSED MEZZANINE EQUIPMENT PLANS
SCALE: 1" = 5'

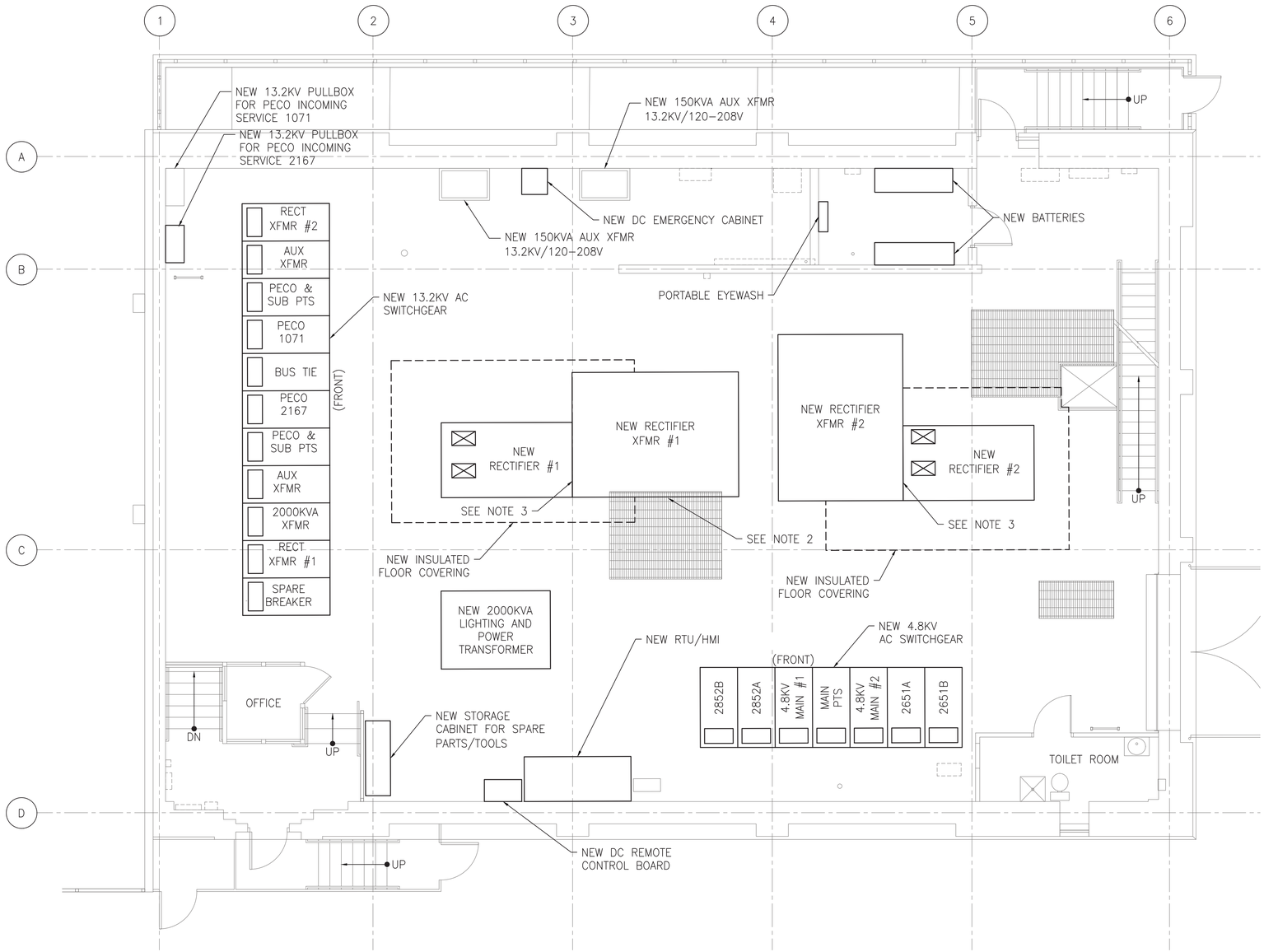

2 TP220 PROPOSED FIRST FLOOR EQUIPMENT PLANS
SCALE: 1" = 5'

NOTES:

1. THIS DRAWING REFLECTS THE FINAL CONFIGURATION OF TPSS EQUIPMENT BASED UPON THE CONSTRUCTION STAGING. REFER TO DRAWING TP210 FOR STAGING NOTES.
2. THE CONTRACTOR TO PROVIDE A DESIGN FOR A REDUCED SIZE GRATE IN ORDER FOR THE INSTALLATION OF NEW RECTIFIER TRANSFORMER SET #1 AND INSULATED FLOOR COVERING.
3. THE CONTRACTOR TO PROVIDE AN INSULATING BARRIER BETWEEN THE NEW RECTIFIER AND THE NEW RECTIFIER TRANSFORMER.

5 2.5 0 5
SCALE: 1"=5'

50% SUBMISSION
NOT FOR CONSTRUCTION

SOUTHEASTERN PENNSYLVANIA TRANSPORTATION AUTHORITY
EM&C DIVISION
1234 MARKET ST, 13TH FL.
PHILADELPHIA, PA 19107

CHIEF ENGINEER - EM&C
CHIEF ENGINEERING OFFICER - B&B
CHIEF RAIL TRANSIT OFFICER
SYSTEM SAFETY
DIRECTOR OF ENGINEERING - B&B
MANAGER - ARCH / ENGINEERING
PROJECT MANAGER

HDR
HDR Engineering, Inc.
Philadelphia, PA

REV	DATE	DESCRIPTION	BY	CK'D	APD

DATE PRINTED: 10/21/2025

PARK
SUBWAY/ELEVATED TRAINS
TRACTION POWER SUBSTATION REHABILITATION
TRACTION POWER
FINAL MEZZ & FIRST FLOOR EQUIPMENT PLANS

SCALE: AS SHOWN
SCALE FACTOR: -
DATE: 08/22/2025
DRAWN BY: YL
CHECKED BY: VS
WORK ORDER NO.: 276482
SHEET NUMBER: **TP220**
DWG. NO.: 19 OF 35
SHT. NO.: 236 OF 453
ARCHIVE NO.:
COMPUTER FILE NO.: 17AN-TP220
REV. NO.: -

STATUS: 50% SUBMISSION

C:\PWWORKING\PITTD\01961542\17AN-TP220.DWG

NOTES:

1. THIS DRAWING REFLECTS THE FINAL CONFIGURATION OF TPSS EQUIPMENT BASED UPON THE CONSTRUCTION STAGING. REFER TO DRAWING TP210 FOR STAGING NOTES.
2. WESS EQUIPMENT INSTALLED MID-2017 TO REMAIN.

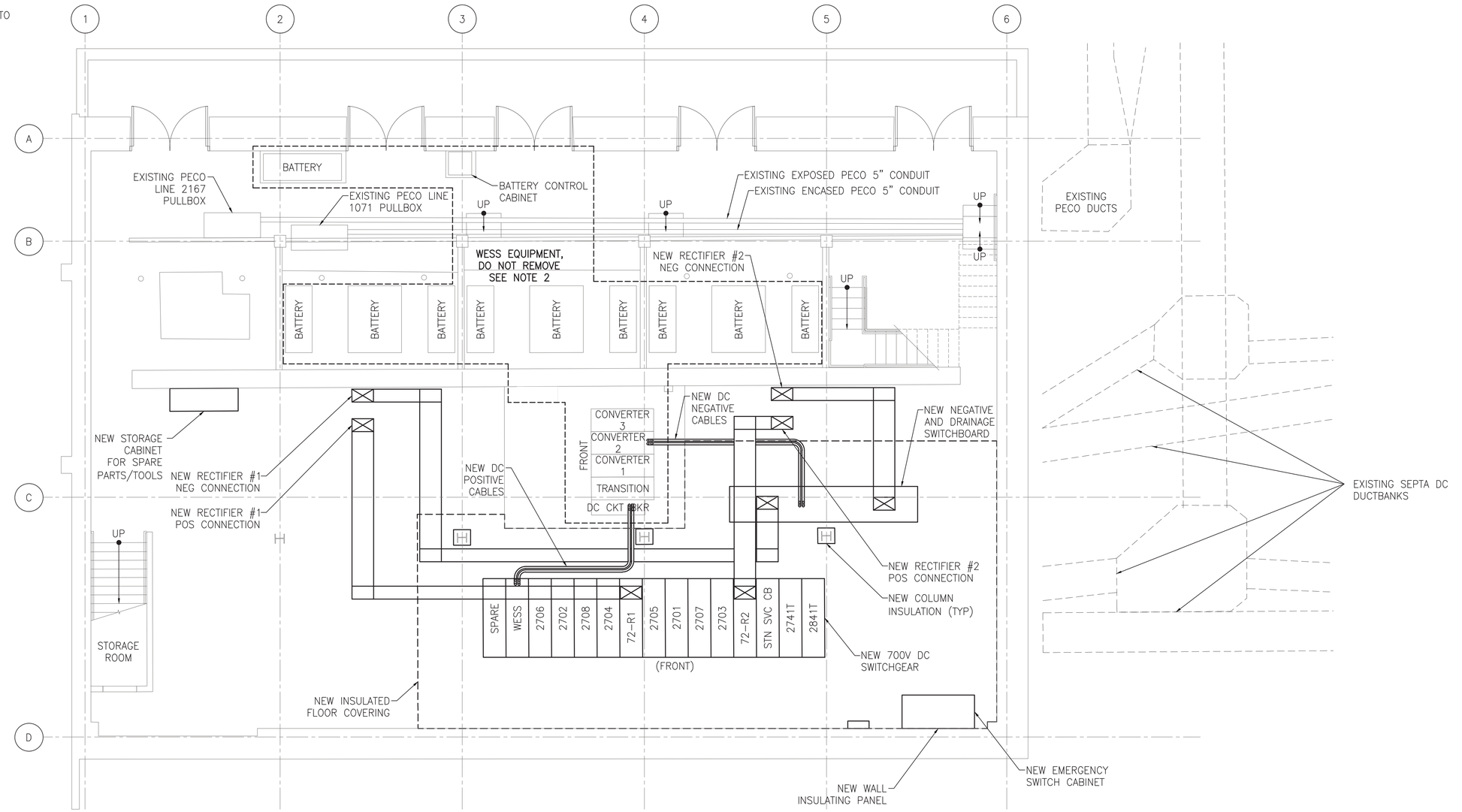

1 TP221 PROPOSED BASEMENT EQUIPMENT PLAN
SCALE: 1" = 5'

5 2.5 0 5
SCALE: 1"=5'

50% SUBMISSION
NOT FOR CONSTRUCTION

C:\PW\WORKING\PITTD\196154217AN-TP221.DWG

SOUTHEASTERN PENNSYLVANIA TRANSPORTATION AUTHORITY
EM&C DIVISION
1234 MARKET ST, 13TH FL.
PHILADELPHIA, PA 19107

CHIEF ENGINEER - EM&C
CHIEF ENGINEERING OFFICER - B&B
CHIEF RAIL TRANSIT OFFICER
SYSTEM SAFETY
DIRECTOR OF ENGINEERING - B&B
MANAGER - ARCH / ENGINEERING
PROJECT MANAGER

HDR Engineering, Inc.
Philadelphia, PA

REV	DATE	DESCRIPTION	BY	CKD	APD

DATE PRINTED: 10/21/2025

PARK
SUBWAY/ELEVATED TRAINS
TRACTION POWER SUBSTATION REHABILITATION
TRACTION POWER
PROPOSED BASEMENT EQUIPMENT PLAN

SCALE: AS SHOWN
SCALE FACTOR: -
DATE: 08/22/2025
DRAWN BY: MB
CHECKED BY: YL
WORK ORDER NO.: 276482
SHEET NUMBER: **TP221**
DWG. NO.: 20 OF 35
SHT. NO.: 237 OF 453
ARCHIVE NO.:
COMPUTER FILE NO.: 17AN-TP221
REV. NO.: -

STATUS: 50% SUBMISSION

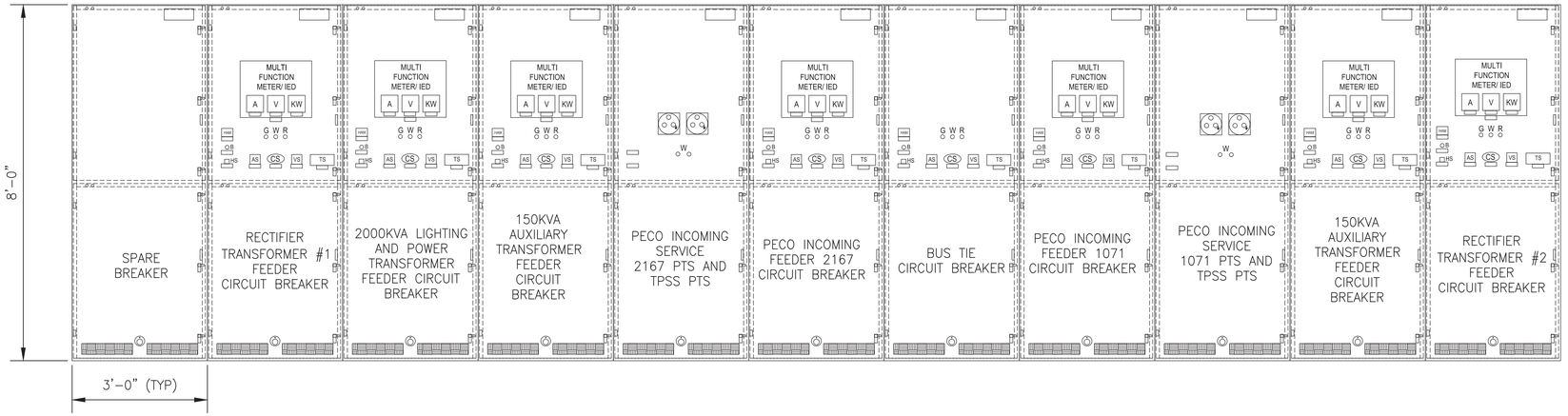

1 TP226 13.2KV AC SWITCHGEAR – FRONT VIEW
SCALE: N.T.S.

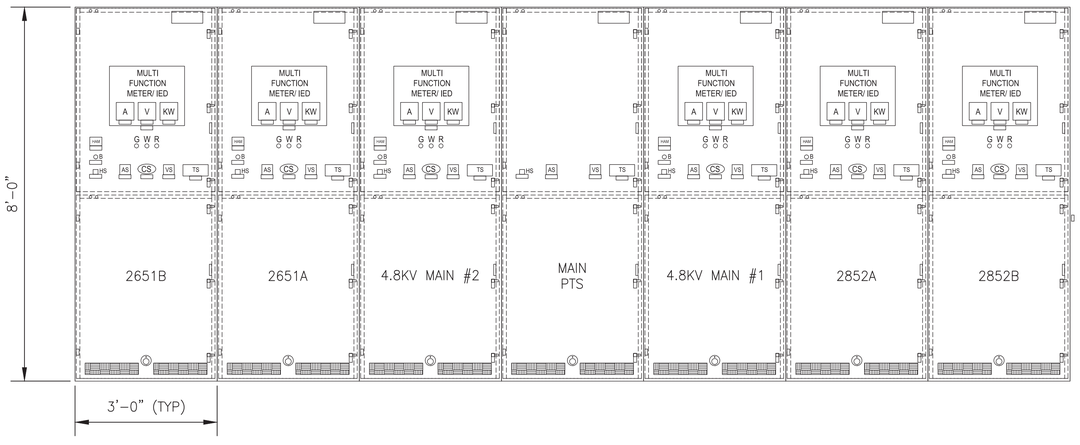

2 TP226 4.8KV AC SWITCHGEAR – FRONT VIEW
SCALE: N.T.S.

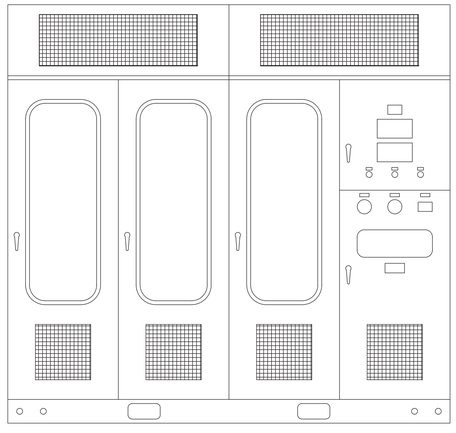

3 TP226 700V DC 4000KW RECTIFIER – FRONT VIEW
SCALE: N.T.S.

NOTES:

1. FOR DETAIL REQUIREMENTS, SEE CONTRACT SPECIFICATIONS.
2. ALL DIMENSIONS AND LAYOUT SHOWN ARE TYPICAL AND WILL VARY BY MANUFACTURER.
3. REFER TO DRAWING TP220 FOR FINAL FIRST FLOOR EQUIPMENT LAYOUT PLAN.

50% SUBMISSION
NOT FOR CONSTRUCTION

SOUTHEASTERN PENNSYLVANIA TRANSPORTATION AUTHORITY
EM&C DIVISION
1234 MARKET ST, 13TH FL.
PHILADELPHIA, PA 19107

CHIEF ENGINEER - EM&C
CHIEF ENGINEERING OFFICER - B&B
CHIEF RAIL TRANSIT OFFICER
SYSTEM SAFETY
DIRECTOR OF ENGINEERING - B&B
MANAGER - ARCH / ENGINEERING
PROJECT MANAGER

HDR Engineering, Inc.
Philadelphia, PA

REV	DATE	DESCRIPTION	BY	CK'D	APP'D

DATE PRINTED: 10/21/2025

PARK
SUBWAY/ELEVATED TRAINS
TRACTION POWER SUBSTATION REHABILITATION
TRACTION POWER
PROPOSED FIRST FLOOR EQUIPMENT ELEVATIONS

SCALE: NTS	SCALE FACTOR: -
DATE: 08/22/2025	DRAWN BY: YL
	CHECKED BY: VS
WORK ORDER NO.: 276482	
SHEET NUMBER: **TP226**	
DWG. NO.: 21 OF 35	
SHT. NO.: 238 OF 453	
ARCHIVE NO.:	
COMPUTER FILE NO.: 17AN-TP226	REV. NO.: -

STATUS: 50% SUBMISSION

C:\PW\WORKING\PITTD\D1961542\17AN-TP226.DWG

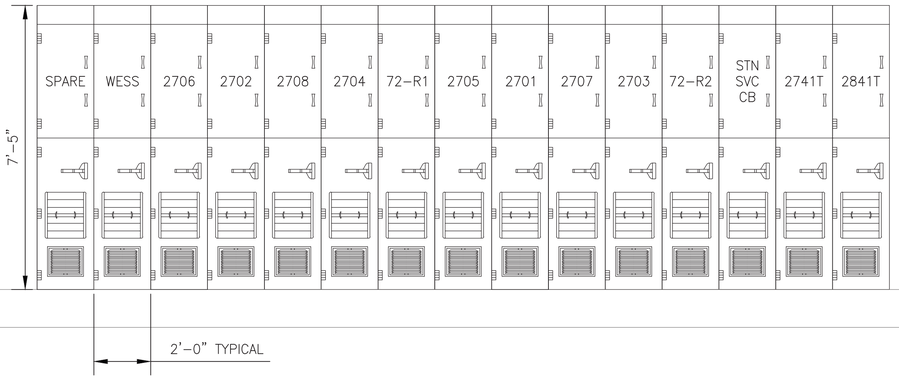

1 TP227 700V DC SWITCHGEAR FRONT ELEVATION

SCALE: N.T.S.

NOTES:

1. REFER TO DRAWING TP221 FOR FINAL BASEMENT EQUIPMENT LAYOUT PLAN.

50% SUBMISSION
NOT FOR CONSTRUCTION

SOUTHEASTERN PENNSYLVANIA TRANSPORTATION AUTHORITY
EM&C DIVISION
1234 MARKET ST, 13TH FL.
PHILADELPHIA, PA 19107

CHIEF ENGINEER - EM&C
CHIEF ENGINEERING OFFICER - B&B
CHIEF RAIL TRANSIT OFFICER
SYSTEM SAFETY
DIRECTOR OF ENGINEERING - B&B
MANAGER - ARCH / ENGINEERING
PROJECT MANAGER

HDR Engineering, Inc.
Philadelphia, PA

REV	DATE	DESCRIPTION	BY	CK'D	APP'D

DATE PRINTED: 10/21/2025

PARK
SUBWAY/ELEVATED TRAINS
TRACTION POWER SUBSTATION REHABILITATION
TRACTION POWER
PROPOSED BASEMENT EQUIPMENT ELEVATIONS

SCALE: NTS
SCALE FACTOR: -
DATE: 08/22/2025
DRAWN BY: YL
CHECKED BY: YS
WORK ORDER NO.: 276482
SHEET NUMBER: **TP227**
DWG. NO.: 22 OF 35
SHT. NO.: 239 OF 453
ARCHIVE NO.:
COMPUTER FILE NO.: 17AN-TP227
REV. NO.: -

STATUS: 50% SUBMISSION

C:\PW\WORKING\PITTD\196154\17AN-TP227.DWG

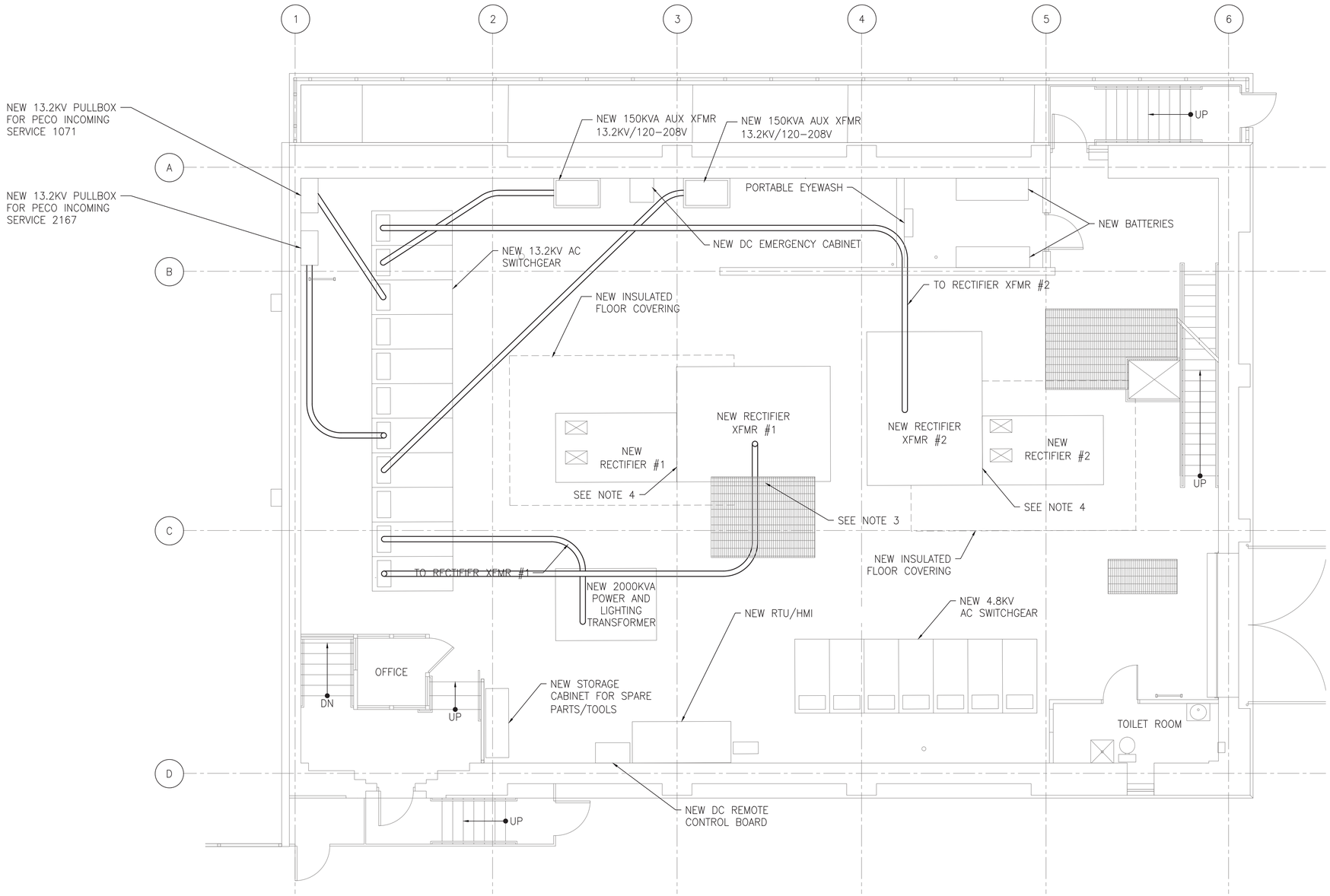

NOTES:

1. EXACT LOCATION, SUPPORT AND SPACING OF CONDUITS TO BE DETERMINED BY FIELD CONDITIONS.
2. REFER TO DRAWING TP220 AND DRAWING TP221 FOR FINAL EQUIPMENT LAYOUT PLANS.
3. THE CONTRACTOR TO PROVIDE A DESIGN FOR A REDUCED SIZE GRATE IN ORDER FOR THE INSTALLATION OF NEW RECTIFIER TRANSFORMER SET #1 AND INSULATED FLOOR COVERING.
4. THE CONTRACTOR TO PROVIDE AN INSULATING BARRIER BETWEEN THE NEW RECTIFIER AND THE NEW RECTIFIER TRANSFORMER.

5 2.5 0 5

SCALE: 1"=5'

50% SUBMISSION
NOT FOR CONSTRUCTION

SOUTHEASTERN PENNSYLVANIA TRANSPORTATION AUTHORITY
EM&C DIVISION
1234 MARKET ST, 13TH FL.
PHILADELPHIA, PA 19107

CHIEF ENGINEER - EM&C

CHIEF ENGINEERING OFFICER - B&B

CHIEF RAIL TRANSIT OFFICER

SYSTEM SAFETY

DIRECTOR OF ENGINEERING - B&B

MANAGER - ARCH / ENGINEERING

PROJECT MANAGER

HDR Engineering, Inc.
Philadelphia, PA

REV	DATE	DESCRIPTION	BY	CK'D	APP'D

DATE PRINTED: 10/21/2025

PARK
SUBWAY/ELEVATED TRAINS
TRACTION POWER SUBSTATION REHABILITATION
TRACTION POWER
13.2 KV CABLE & CONDUIT DUCT BANK

SCALE: AS SHOWN
SCALE FACTOR: -
DATE: 08/22/2025
DRAWN BY: MB
CHECKED BY: YL
WORK ORDER NO.: 276482
SHEET NUMBER: **TP232**
DWG. NO.: 23 OF 35
SHT. NO.: 240 OF 453
ARCHIVE NO.:
COMPUTER FILE NO.: 17AN-TP232
REV. NO.: -

STATUS: 50% SUBMISSION

C:\PW\WORKING\PITT\D1961542\17AN-TP232.DWG

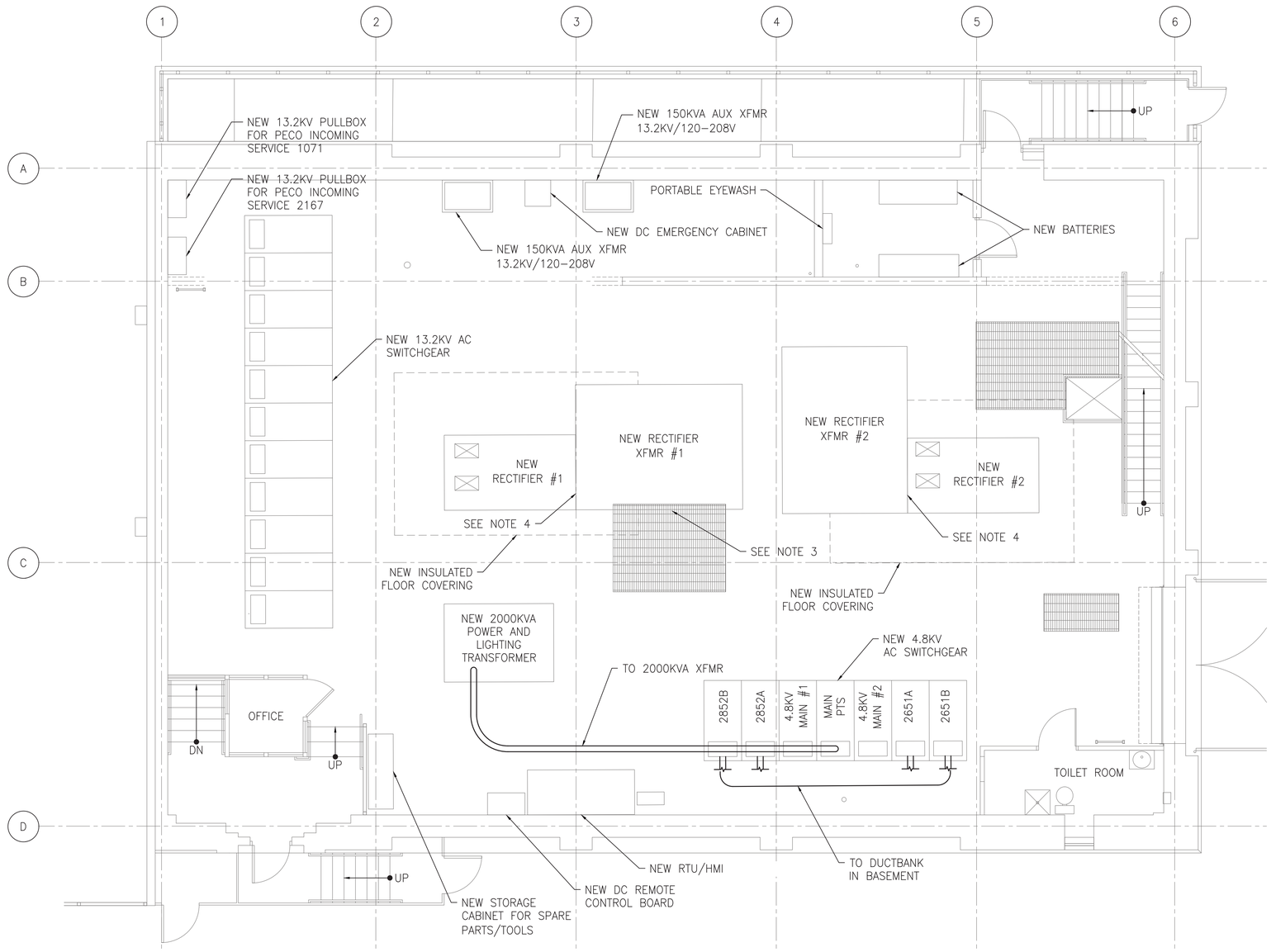

NOTES:

1. EXACT LOCATION, SUPPORT AND SPACING OF CONDUITS TO BE DETERMINED BY FIELD CONDITIONS.
2. REFER TO DRAWING TP220 AND DRAWING TP221 FOR FINAL EQUIPMENT LAYOUT PLANS.
3. THE CONTRACTOR TO PROVIDE A DESIGN FOR A REDUCED SIZE GRATE IN ORDER FOR THE INSTALLATION OF NEW RECTIFIER TRANSFORMER SET #1 AND INSULATED FLOOR COVERING.
4. THE CONTRACTOR TO PROVIDE AN INSULATING BARRIER BETWEEN THE NEW RECTIFIER AND THE NEW RECTIFIER TRANSFORMER.

5 2.5 0 5

SCALE: 1"=5'

50% SUBMISSION
NOT FOR CONSTRUCTION

SOUTHEASTERN PENNSYLVANIA TRANSPORTATION AUTHORITY
EM&C DIVISION
1234 MARKET ST, 13TH FL.
PHILADELPHIA, PA 19107

CHIEF ENGINEER - EM&C

CHIEF ENGINEERING OFFICER - B&B

CHIEF RAIL TRANSIT OFFICER

SYSTEM SAFETY

DIRECTOR OF ENGINEERING - B&B

MANAGER - ARCH / ENGINEERING

PROJECT MANAGER

HDR Engineering, Inc.
Philadelphia, PA

REV	DATE	DESCRIPTION	BY	CKD	APD

DATE PRINTED: 10/21/2025

PARK
SUBWAY/ELEVATED TRAINS
TRACTION POWER SUBSTATION REHABILITATION
TRACTION POWER
4.8 KV CABLE & DUCT BANK

SCALE: AS SHOWN
SCALE FACTOR: -
DATE: 08/22/2025
DRAWN BY: MB
CHECKED BY: YL
WORK ORDER NO.: 276482
SHEET NUMBER: **TP233**
DWG. NO.: 24 OF 35
SHT. NO.: 241 OF 453
ARCHIVE NO.:
COMPUTER FILE NO.: 17AN-TP233
REV. NO.: -

STATUS: 50% SUBMISSION

C:\PW\WORKING\PITTD\96154217AN-TP233.DWG

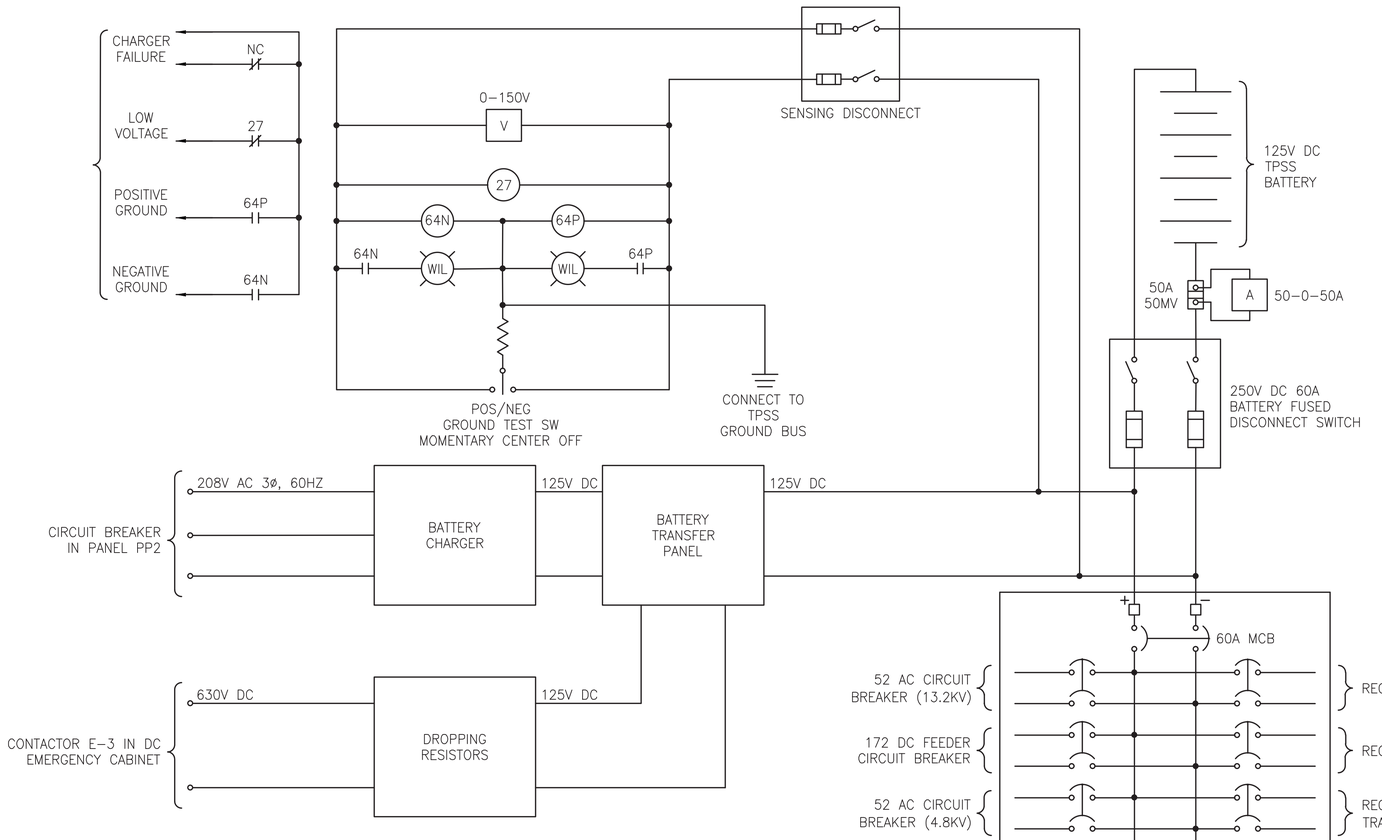

BATTERY CHARGER SCHEMATIC

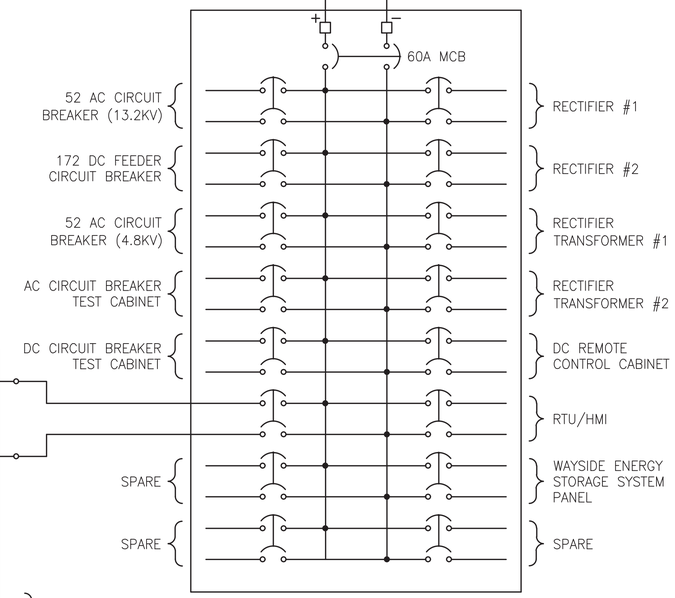

125V DC PANEL

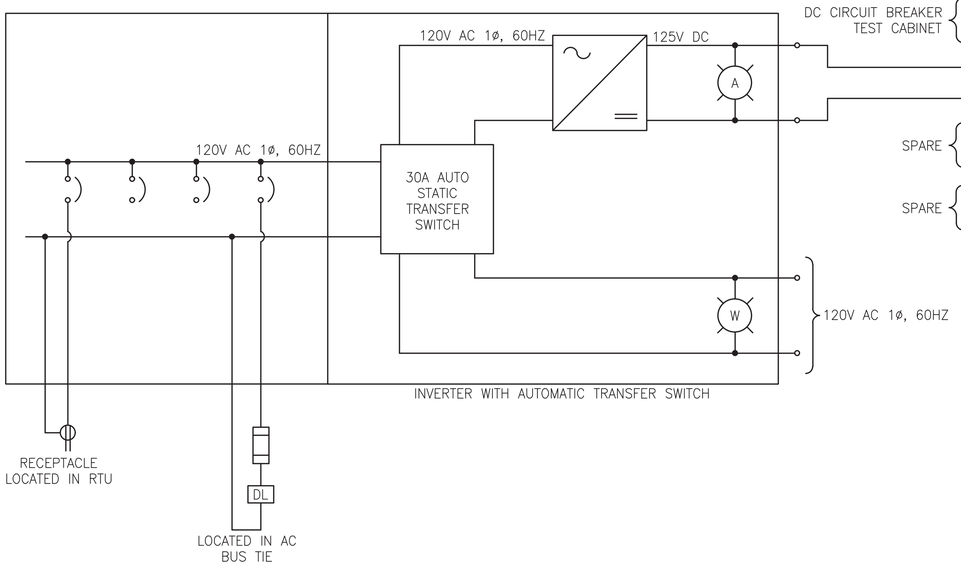

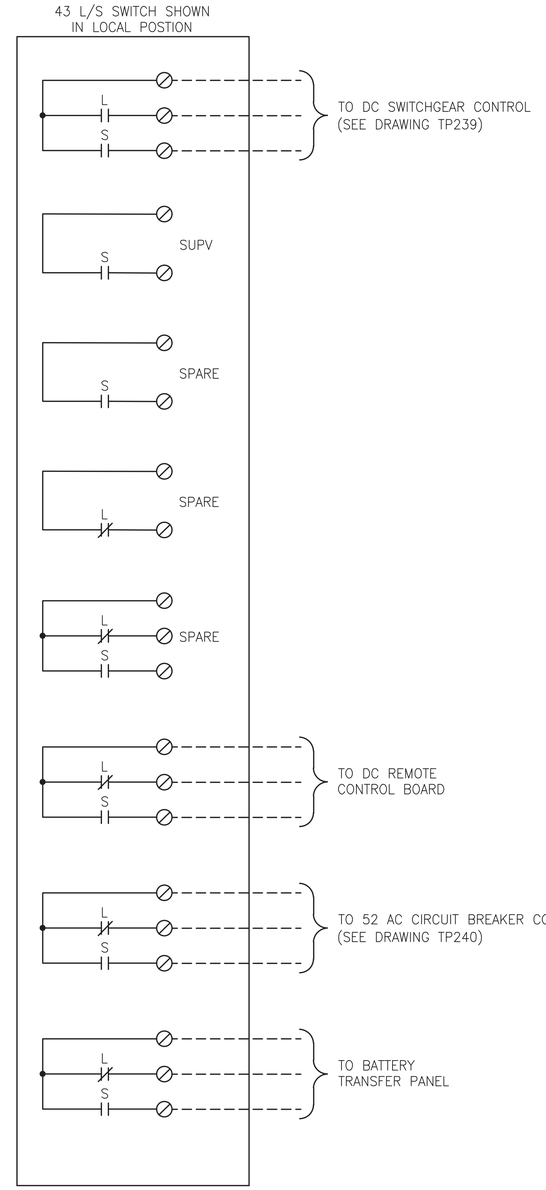

43 L/S SWITCH

NOTES:

1. THIS IS A TYPICAL BATTERY AND CONTROL CABLE PLAN. THE CONTRACTOR SHALL DEVELOP THE DESIGN TO 100 PERCENT BASED ON SITE CONDITIONS.
2. THE DESIGN SHALL CONFORM TO STANDARD OPERATING PROCEDURES OF SEPTA DURING NORMAL AND EMERGENCY SITUATIONS.

50% SUBMISSION
NOT FOR CONSTRUCTION

SOUTHEASTERN PENNSYLVANIA TRANSPORTATION AUTHORITY
EM&C DIVISION
1234 MARKET ST, 13TH FL, PHILADELPHIA, PA 19107

CHIEF ENGINEER - EM&C
CHIEF ENGINEERING OFFICER - B&B
CHIEF RAIL TRANSIT OFFICER
SYSTEM SAFETY
DIRECTOR OF ENGINEERING - B&B
MANAGER - ARCH / ENGINEERING
PROJECT MANAGER

HDR Engineering, Inc.
Philadelphia, PA

REV	DATE	DESCRIPTION	BY	CK'D	APP'D

DATE PRINTED: 10/21/2025

PARK
SUBWAY/ELEVATED TRAINS
TRACTION POWER SUBSTATION REHABILITATION
TRACTION POWER
BATTERY & CONTROL DIAGRAM

SCALE: NTS	SCALE FACTOR: -
DATE: 08/22/2025	DRAWN BY: YL
	CHECKED BY: VS
WORK ORDER NO.: 276482	
SHEET NUMBER: **TP234**	
DWG. NO.: 25 OF 35	
SHT. NO.: 242 OF 453	
ARCHIVE NO.:	
COMPUTER FILE NO.: 17AN-TP234	REV. NO.: -

STATUS: 50% SUBMISSION

C:\PW\WORKING\PITTID\96154217AN-TP234.DWG

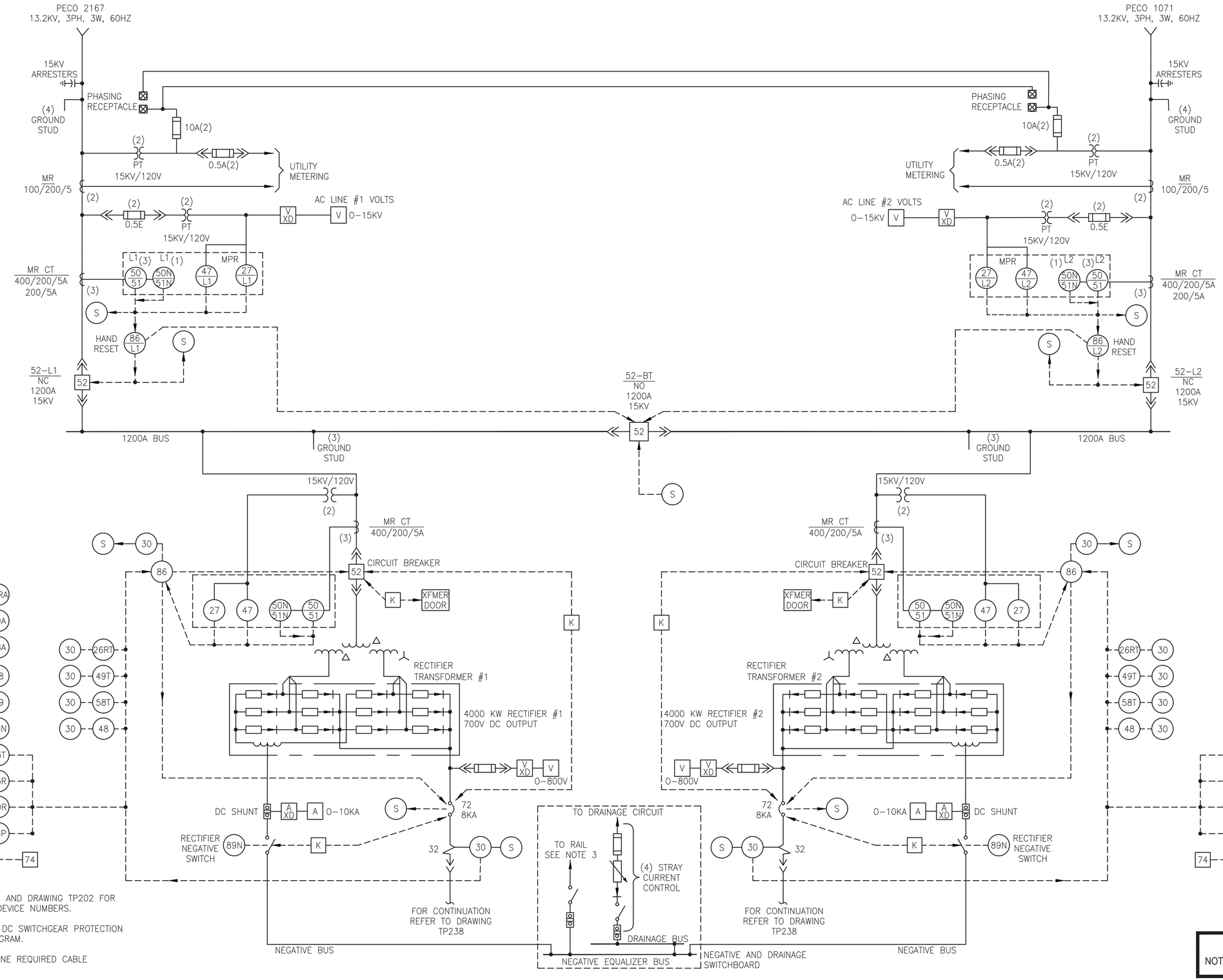

NOTES:

1. REFER TO DRAWING TP201 AND DRAWING TP202 FOR SYMBOLS, LEGENDS AND DEVICE NUMBERS.
2. SEE DRAWING TP238 FOR DC SWITCHGEAR PROTECTION & RELAY SINGLE LINE DIAGRAM.
3. FIELD SURVEY TO DETERMINE REQUIRED CABLE QUANTITIES AND SIZES.

50% SUBMISSION
NOT FOR CONSTRUCTION

C:\PW\WORKING\PITTD\19615421\7AN-TP237.DWG

SOUTHEASTERN PENNSYLVANIA TRANSPORTATION AUTHORITY
EM&C DIVISION
1234 MARKET ST, 13TH FL.
PHILADELPHIA, PA 19107

CHIEF ENGINEER - EM&C
CHIEF ENGINEERING OFFICER - B&B
CHIEF RAIL TRANSIT OFFICER
SYSTEM SAFETY
DIRECTOR OF ENGINEERING - B&B
MANAGER - ARCH / ENGINEERING
PROJECT MANAGER

HDR Engineering, Inc.
Philadelphia, PA

REV	DATE	DESCRIPTION	BY	CKD	APD

DATE PRINTED: 10/21/2025

PARK
SUBWAY/ELEVATED TRAINS
TRACTION POWER SUBSTATION REHABILITATION
TRACTION POWER
PROTECTION & RELAY SINGLE LINE DIAGRAM - SHEET 1

SCALE: NTS	SCALE FACTOR: -
DATE: 08/22/2025	DRAWN BY: YL
	CHECKED BY: VS
WORK ORDER NO.: 276482	
SHEET NUMBER: **TP237**	
DWG. NO.: 26 OF 35	
SHT. NO.: 243 OF 453	
ARCHIVE NO.:	
COMPUTER FILE NO.: 17AN-TP237	REV. NO.: -

STATUS: 50% SUBMISSION

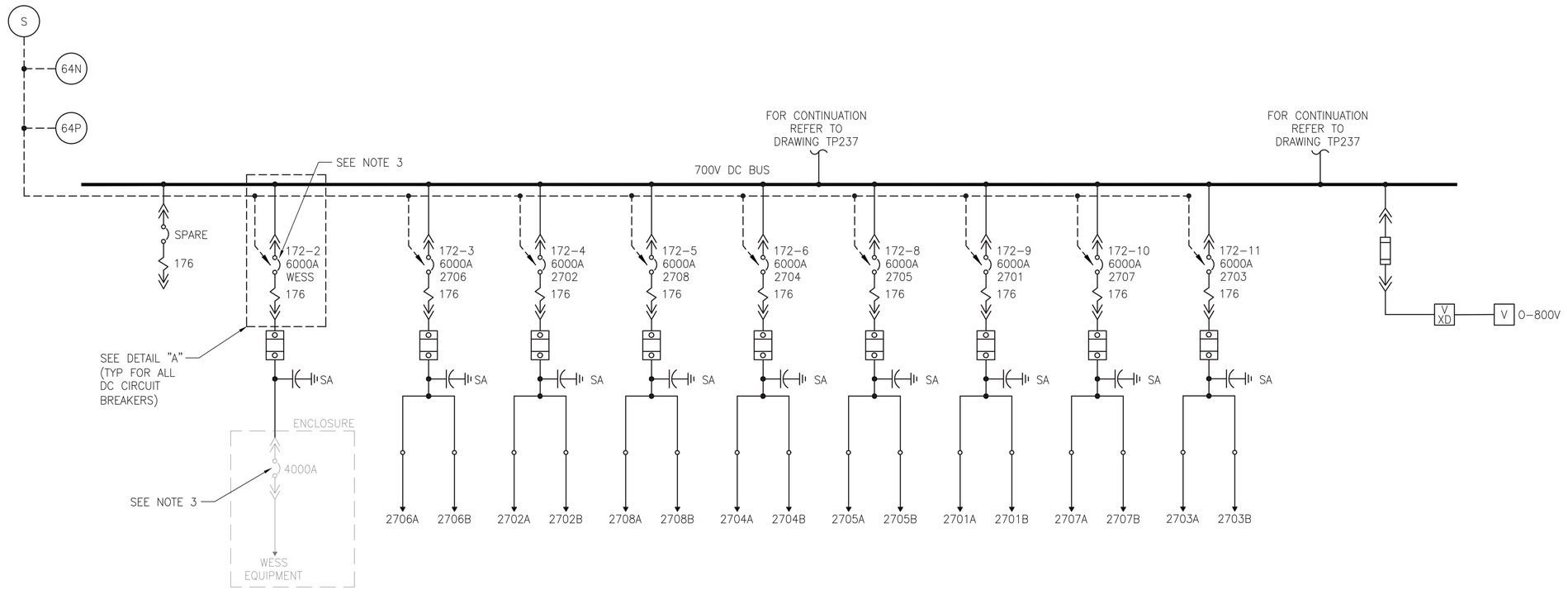

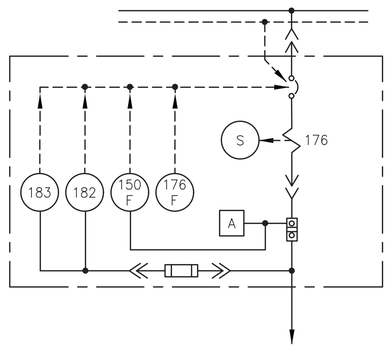

DETAIL "A"

NOTES:

1. REFER TO DRAWING TP201 AND DRAWING TP202 FOR SYMBOLS, LEGENDS AND DEVICE NUMBERS.
2. SEE DRAWING TP237 FOR AC SWITCHGEAR PROTECTION & RELAY SINGLE LINE DIAGRAM.
3. THE CONTRACTOR TO DOCUMENT WESS DC POSITIVE CIRCUIT BREAKER PROTECTION ON THIS DRAWING AS PART OF THE FINAL DESIGN.

50% SUBMISSION
NOT FOR CONSTRUCTION

SOUTHEASTERN PENNSYLVANIA TRANSPORTATION AUTHORITY
EM&C DIVISION
1234 MARKET ST, 13TH FL.
PHILADELPHIA, PA 19107

CHIEF ENGINEER - EM&C
CHIEF ENGINEERING OFFICER - B&B
CHIEF RAIL TRANSIT OFFICER
SYSTEM SAFETY
DIRECTOR OF ENGINEERING - B&B
MANAGER - ARCH / ENGINEERING
PROJECT MANAGER

HDR Engineering, Inc.
Philadelphia, PA

REV	DATE	DESCRIPTION	BY	CKD	APD

PARK
SUBWAY/ELEVATED TRAINS
TRACTION POWER SUBSTATION REHABILITATION
TRACTION POWER
PROTECTION & RELAY SINGLE LINE DIAGRAM - SHEET 2

SCALE: NTS	SCALE FACTOR: -
DATE: 08/22/2025	DRAWN BY: YL
	CHECKED BY: YS
WORK ORDER NO.: 276482	
SHEET NUMBER: **TP238**	
DWG. NO.: 27 OF 35	
SHT. NO.: 244 OF 453	
ARCHIVE NO.:	
COMPUTER FILE NO.: 17AN-TP238	REV. NO.: -

DATE PRINTED: 10/21/2025
STATUS: 50% SUBMISSION

C:\PWWORKING\PITTD\196154\217AN-TP238.DWG

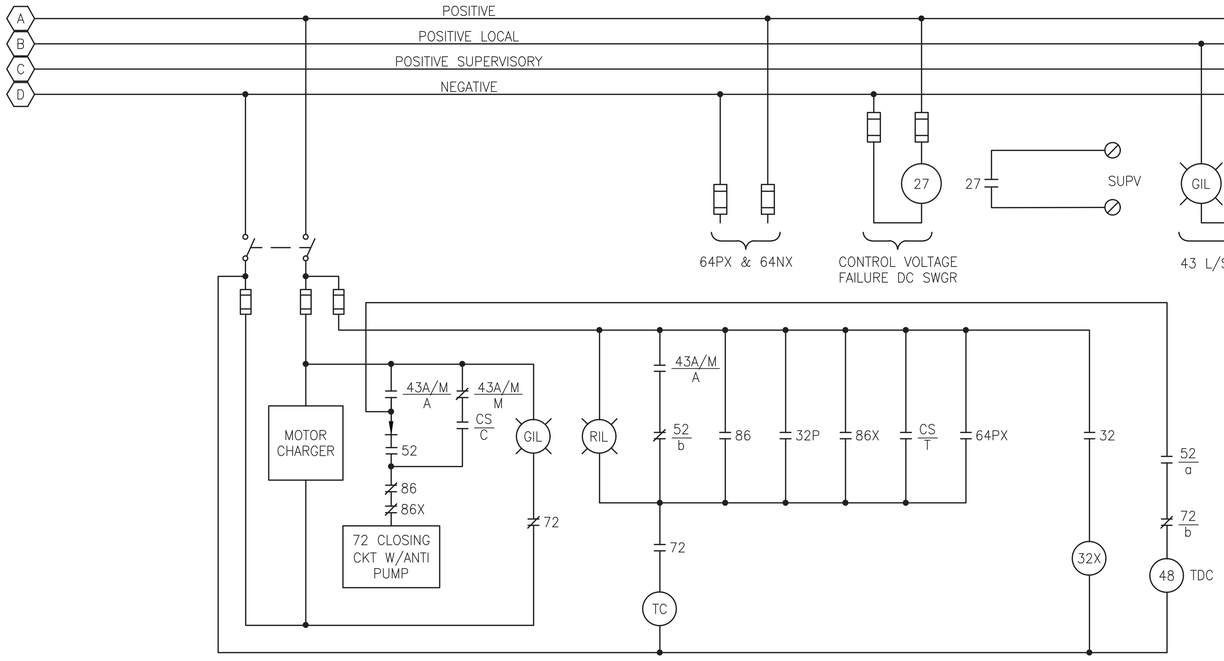

1 TP239 72 CATHODE CIRCUIT BREAKER

DEVICE 102 REPEAT CYCLE TIME
14 SECOND PER REVOLUTION

102/2	CLOSES AT 2 SECONDS OPENS AT 14 SECONDS
102/3	CLOSES AT 7 SECONDS OPENS AT 9 SECONDS
102/1	CLOSES AT 8.75 SECONDS OPENS AT 9.75 SECONDS
102/4	CLOSES AT 2 SECONDS OPENS AT 12 SECONDS

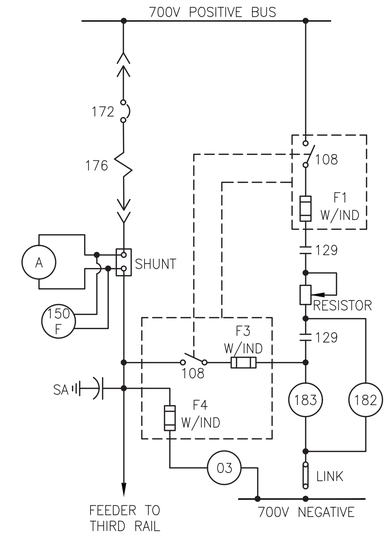

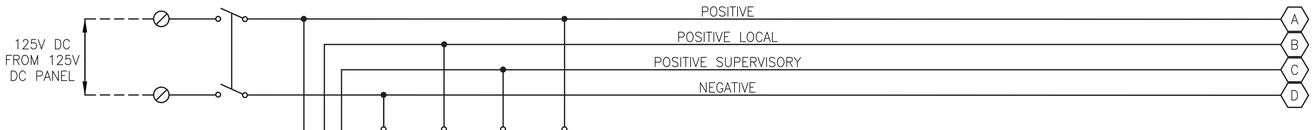

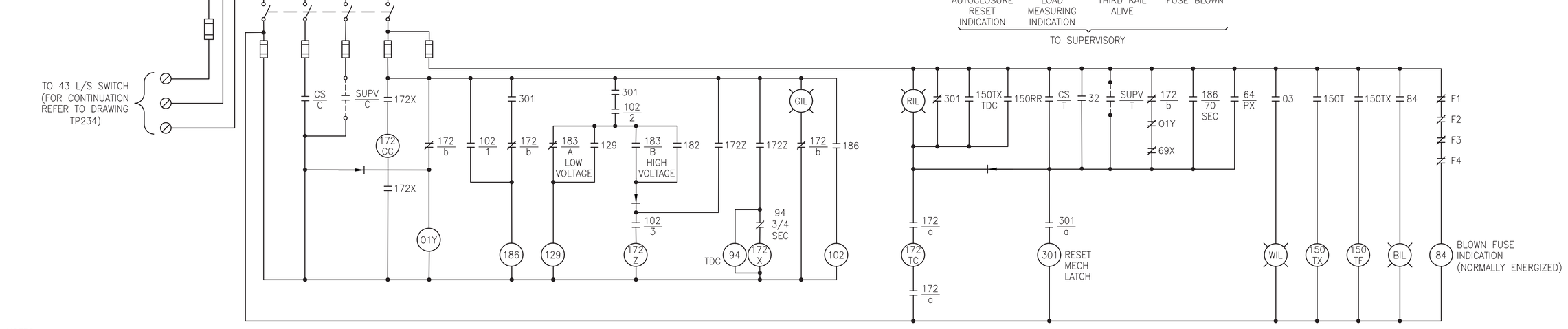

2 TP239 172 DC FEEDER CIRCUIT BREAKER

NOTES:

1. REFER TO DRAWING TP201 AND DRAWING TP202 FOR SYMBOLS, LEGENDS AND DEVICE NUMBERS.
2. THESE ARE TYPICAL CONTROL DIAGRAMS. THE CONTRACTOR SHALL DEVELOP THE DESIGN TO 100 PERCENT BASED ON SITE CONDITIONS.
3. THE CONTRACTOR SHALL ESTABLISH CURRENT TRANSFORMER AND POTENTIAL TRANSFORMER RATIOS TO MEET THE PROTECTIVE RELAYING REQUIREMENTS.

50% SUBMISSION
NOT FOR CONSTRUCTION

SOUTHEASTERN PENNSYLVANIA TRANSPORTATION AUTHORITY
EM&C DIVISION
1234 MARKET ST, 13TH FL.
PHILADELPHIA, PA 19107

CHIEF ENGINEER - EM&C
CHIEF ENGINEERING OFFICER - B&B
CHIEF RAIL TRANSIT OFFICER
SYSTEM SAFETY
DIRECTOR OF ENGINEERING - B&B
MANAGER - ARCH / ENGINEERING
PROJECT MANAGER

HDR
HDR Engineering, Inc.
Philadelphia, PA

REV	DATE	DESCRIPTION	BY	CK'D	APD

DATE PRINTED: 10/21/2025

PARK
SUBWAY/ELEVATED TRAINS
TRACTION POWER SUBSTATION REHABILITATION
TRACTION POWER
CIRCUIT BREAKER CONTROL DIAGRAM

SCALE: NTS	SCALE FACTOR: -
DATE: 08/22/2025	DRAWN BY: DMW CHECKED BY: BH
WORK ORDER NO.: 276482	
SHEET NUMBER: **TP239**	
DWG. NO.: 28 OF 35	
SHT. NO.: 245 OF 453	
ARCHIVE NO.:	
COMPUTER FILE NO.: 17AN-TP239	REV. NO.: -

STATUS: 50% SUBMISSION

C:\PWWORKING\PITT\D1961542\17AN-TP239.DWG

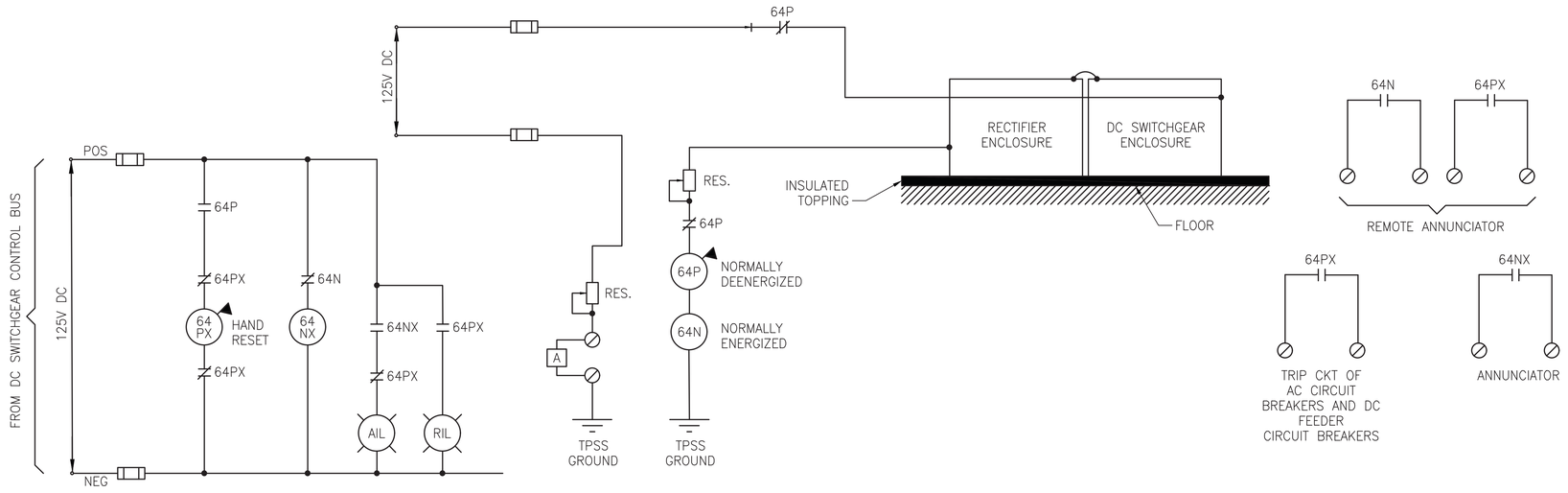

1 TP241 RECTIFIER AND DC SWITCHGEAR POTENTIAL MONITORING CIRCUIT (TYPICAL)

NOTES:

1. REFER TO DRAWING TP201 AND DRAWING TP202 FOR SYMBOLS, LEGENDS AND DEVICE NUMBERS.
2. THIS IS A TYPICAL DC GROUND FAULT PROTECTION SCHEME. THE CONTRACTOR SHALL DEVELOP THE DESIGN TO 100 PERCENT BASED ON SITE CONDITIONS.

50% SUBMISSION
NOT FOR CONSTRUCTION

SOUTHEASTERN PENNSYLVANIA TRANSPORTATION AUTHORITY
EM&C DIVISION
1234 MARKET ST, 13TH FL.
PHILADELPHIA, PA 19107

CHIEF ENGINEER - EM&C
CHIEF ENGINEERING OFFICER - B&B
CHIEF RAIL TRANSIT OFFICER
SYSTEM SAFETY
DIRECTOR OF ENGINEERING - B&B
MANAGER - ARCH / ENGINEERING
PROJECT MANAGER

HDR Engineering, Inc.
Philadelphia, PA

REV	DATE	DESCRIPTION	BY	CK'D	APP'D

DATE PRINTED: 10/21/2025

PARK
SUBWAY/ELEVATED TRAINS
TRACTION POWER SUBSTATION REHABILITATION
TRACTION POWER
DC GROUND FAULT PROTECTION SCHEME

SCALE: NTS
SCALE FACTOR: -
DATE: 08/22/2025
DRAWN BY: DMW
CHECKED BY: BH
WORK ORDER NO.: 276482
SHEET NUMBER: **TP241**
DWG. NO.: 30 OF 35
SHT. NO.: 247 OF 453
ARCHIVE NO.:
COMPUTER FILE NO.: 17AN-TP241
REV. NO.: -

STATUS: 50% SUBMISSION

C:\PWWORKING\PITTD\19615421\17AN-TP241.DWG

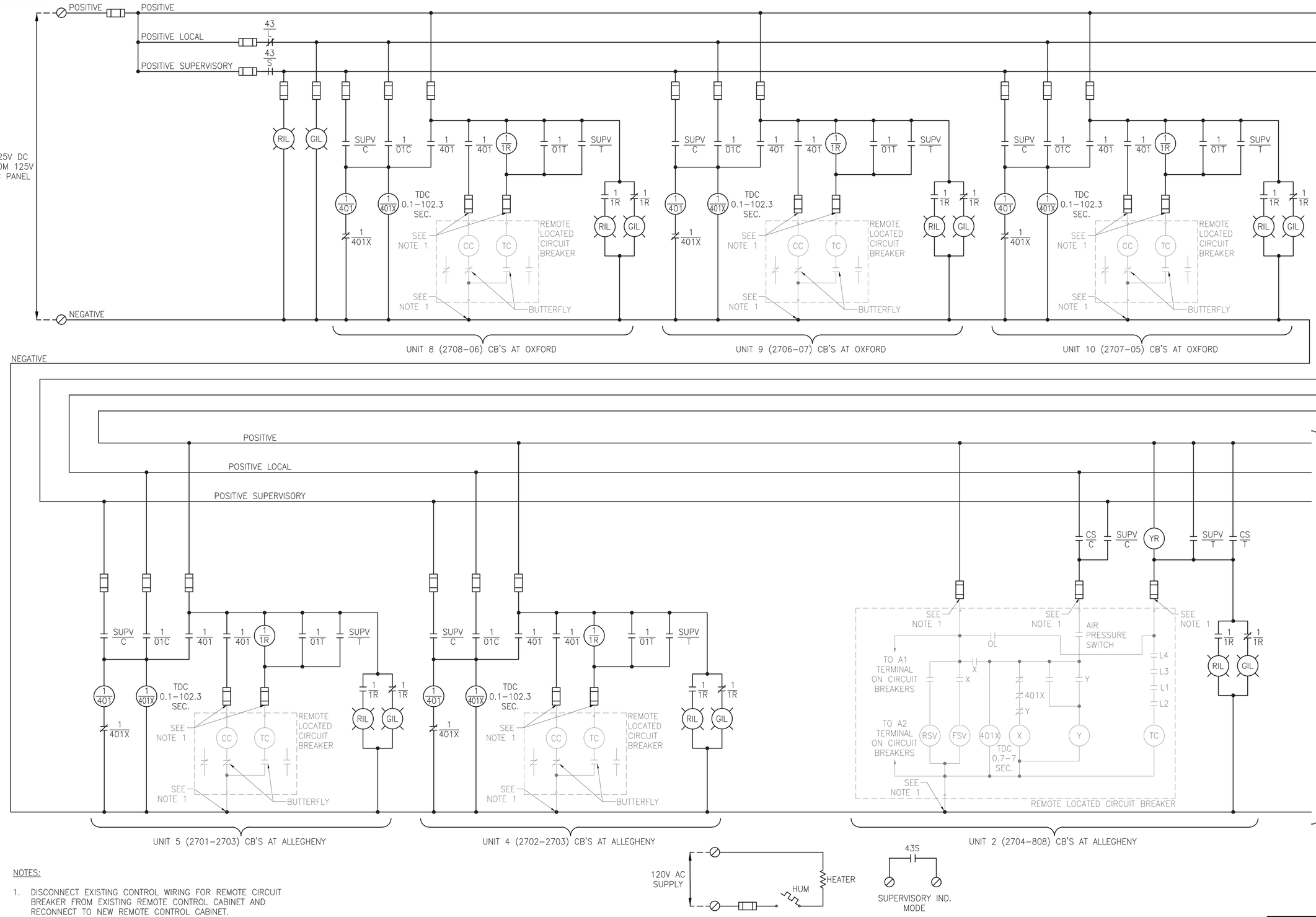

NOTES:

1. DISCONNECT EXISTING CONTROL WIRING FOR REMOTE CIRCUIT BREAKER FROM EXISTING REMOTE CONTROL CABINET AND RECONNECT TO NEW REMOTE CONTROL CABINET.

1 / TP242 DC REMOTE CONTROL BOARD CONTROL SCHEMATIC – SHEET 1

50% SUBMISSION
NOT FOR CONSTRUCTION

C:\PW\WORKING\PITTD\19615421\17AN-TP242.DWG

SOUTHEASTERN PENNSYLVANIA TRANSPORTATION AUTHORITY
EM&C DIVISION
1234 MARKET ST, 13TH FL, PHILADELPHIA, PA 19107

CHIEF ENGINEER - EM&C
CHIEF ENGINEERING OFFICER - B&B
CHIEF RAIL TRANSIT OFFICER
SYSTEM SAFETY
DIRECTOR OF ENGINEERING - B&B
MANAGER - ARCH / ENGINEERING
PROJECT MANAGER

HDR Engineering, Inc.
Philadelphia, PA

REV	DATE	DESCRIPTION	BY	CKD	APD

DATE PRINTED: 10/21/2025

BROAD
SUBWAY/ELEVATED TRAINS
TRACTION POWER SUBSTATION REHABILITATION
TRACTION POWER
DC REMOTE CTL BRD CONTROL SCHEMATIC - SHEET 1

SCALE: NTS	SCALE FACTOR: -
DATE: 08/22/2025	DRAWN BY: DMH
	CHECKED BY: YL

WORK ORDER NO.: 276491

SHEET NUMBER
TP242

DWG. NO.:	31	OF	35
SHT. NO.:	248	OF	453

ARCHIVE NO.:

COMPUTER FILE NO.: 17AN-TP242
REV. NO.: -

STATUS: 50% SUBMISSION

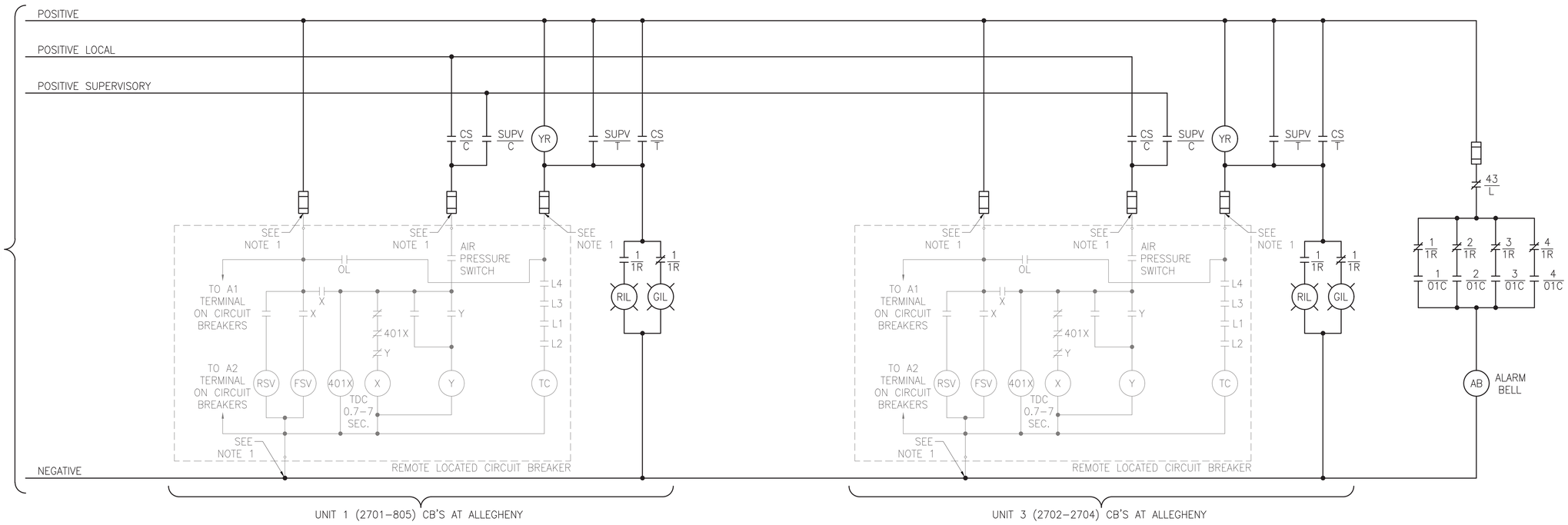

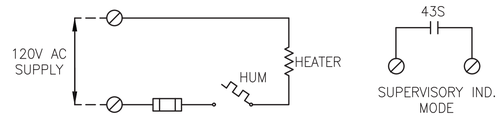

1 / TP243 DC REMOTE CONTROL BOARD CONTROL SCHEMATIC – SHEET 2

NOTES:

1. DISCONNECT EXISTING CONTROL WIRING FOR REMOTE CIRCUIT BREAKER FROM EXISTING REMOTE CONTROL CABINET AND RECONNECT TO NEW REMOTE CONTROL CABINET.

50% SUBMISSION
NOT FOR CONSTRUCTION

SOUTHEASTERN PENNSYLVANIA TRANSPORTATION AUTHORITY
EM&C DIVISION
1234 MARKET ST, 13TH FL,
PHILADELPHIA, PA 19107

CHIEF ENGINEER - EM&C
CHIEF ENGINEERING OFFICER - B&B
CHIEF RAIL TRANSIT OFFICER
SYSTEM SAFETY
DIRECTOR OF ENGINEERING - B&B
MANAGER - ARCH / ENGINEERING
PROJECT MANAGER

HDR Engineering, Inc.
Philadelphia, PA

REV	DATE	DESCRIPTION	BY	CKD	APD

DATE PRINTED: 10/21/2025

BROAD
SUBWAY/ELEVATED TRAINS
TRACTION POWER SUBSTATION
REHABILITATION
TRACTION POWER
DC REMOTE CTL BRD CONTROL SCHEMATIC - SHEET 2

SCALE: NTS	SCALE FACTOR: -
DATE: 08/22/2025	DRAWN BY: DMW
	CHECKED BY: YL
WORK ORDER NO.: 276491	
SHEET NUMBER: **TP243**	
DWG. NO.: 32 OF 35	
SHT. NO.: 249 OF 453	
ARCHIVE NO.:	
COMPUTER FILE NO.: 17AN-TP243	REV. NO.: -

STATUS: 50% SUBMISSION

C:\PW\WORKING\PITTD196154217AN-TP243.DWG

BUS POTENTIAL TRANSFORMER SCADA POINTS

DEVICE	STATUS INDICATION	POINT NUMBER
TELEMETRY POINTS		
15KV BUS 1	VOLTAGE	1
15KV BUS 2	VOLTAGE	2
SPARE	–	3
SPARE	–	4

RECTIFIER TRANSFORMER SCADA POINTS

TOTAL RECTIFIER TRANSFORMERS = 2

DEVICE	STATUS INDICATION	POINT NUMBER
TEMPERATURE (49)	ALARM–T1	1
	TRIP–T2	2
REFLECTIVE FAILURE (58T)		3
CONTROL POINTS		
NONE		
TELEMETRY POINTS		
VOLTAGE	VOLTAGE	1

15KV CIRCUIT BREAKER SCADA POINTS

TOTAL 15KV AC CIRCUIT BREAKERS (FOR 13.2KV) = 6

DEVICE	STATUS INDICATION	POINT NUMBER
CIRCUIT BREAKER	OPENED	1
	CLOSED	2
CIRCUIT BREAKER FAILURE RELAY (50BF)	OPERATED	3
	FAILURE	4
UNDER VOLTAGE RELAY (27)	TRIPPED	5
	SET	6
PHASE BALANCE RELAY (47)	TRIPPED	7
	SET	8
OVERCURRENT RELAY (50/51)	OPERATED	9
	FAILURE	10
LOCAL/REMOTE SWITCH	LOCAL	11
	REMOTE	12
CIRCUIT BREAKER TRIP	TRIPPER	13
CIRCUIT BREAKER READY	READY	14
	–	15
CIRCUIT BREAKER WATCHDOG	WATCHDOG	16
	–	17
RESERVED	N.O.	18
	N.C.	19
RESERVED	N.O.	20
	N.C.	21
RESERVED	N.O.	22
	N.C.	23
CONTROL POINTS		
CIRCUIT BREAKER	OPEN	1
	CLOSE	2
RESERVED	–	3
	–	4
TELEMETRY POINTS		
AMMETER (AM)	CURRENT	1

INCOMING CIRCUIT BREAKER SCADA POINTS

15KV LINE: PECO 504, PECO 532
TOTAL CIRCUIT BREAKERS = 2

DEVICE	STATUS INDICATION	POINT NUMBER
CIRCUIT BREAKER	OPENED	1
	CLOSED	2
CONTROL POINTS		
CIRCUIT BREAKER	OPENED	1
	CLOSED	2
RESERVED	–	3
	–	4
TELEMETRY POINTS		
AMMETER (AM)	CURRENT	1
RESERVED	–	2
VOLTMETER (VM)	VOLTS	3

RECTIFIER SCADA POINTS

TOTAL RECTIFIERS = 2

DEVICE	STATUS INDICATION	POINT NUMBER
RECTIFIER COMPARTMENT DOOR SAFETY INTERLOCK (33R)	TRIP	1
RECTIFICATION FAILURE (58)	ALARM–T1	2
	TRIP–T2	3
RECTIFIER STRUCTURE GROUNDED (64N)	OPERATED	4
	FAILURE	5
RECTIFIER STRUCTURE HOT (64P)	OPERATED	6
	FAILURE	7
BLOWN FUSE IN SURGE PROTECTION CIRCUIT (99X)	ALARM	8
RECTIFIER HEAT SINK OVER–TEMPERATURE	ALARM–T1	9
	TRIP–T2	10

AUXILIARY AND LIGHTING AND POWER TRANSFORMER SCADA POINTS

TOTAL TRANSFORMERS = 3

DEVICE	STATUS INDICATION	POINT NUMBER
TEMPERATURE (49T)	ALARM–T1	1
	TRIP–T2	2
REFLECTIVE FAILURE (58T)	–	3
CONTROL POINTS		
NONE		
TELEMETRY POINTS		
NONE		

FIRE ALARM PANEL

DEVICE	STATUS INDICATION	POINT NUMBER
FIRE ALARM	ON	1
FACP STATUS	TROUBLE	2

BATTERY SYSTEM

DEVICE	STATUS INDICATION	POINT NUMBER
DEVICE	OPENED	1
	CLOSED	2
BATTERY STATUS	ENABLED	3
	DISABLED	4
BATTERY VOLTAGE	NORMAL	5
	LOW	6
CONTROL POWER	AC POWER	7
	NO AC POWER	8
MAINTENANCE	OVERVOLTAGE	9
	UNDERVOLTAGE	10
GAS DETECTION ALARM	NORMAL	11
	ALARM	12
CONTROL POINTS		
NONE		
TELEMETRY POINTS		
NONE		

DC SWITCHGEAR SCADA POINTS

TOTAL CATHODE CIRCUIT BREAKERS = 2
TOTAL DC FEEDER CIRCUIT BREAKERS = 10

DEVICE	STATUS INDICATION	POINT NUMBER
CATHODE CIRCUIT BREAKER	OPENED	1
	CLOSED	2
CATHODE CIRCUIT BREAKER DIRECTIONAL POWER RELAY	OPERATED	3
	FAILURE	4
DC FEEDER CIRCUIT BREAKER	OPENED	5
	CLOSED	6
DC FEEDER CIRCUIT BREAKER RATE OF RISE AND OVER CURRENT RELAY	150F	7
DC FEEDER CIRCUIT BREAKER OVER VOLTAGE RELAY	176	8
LOSS OF DC AUXILIARY SUPPLY (27A AND 27T)	ALARM–T1	9
	TRIP–T2	10
CONTROL POINTS		
CATHODE CIRCUIT BREAKER	OPEN	1
	CLOSE	2
DC FEEDER CIRCUIT BREAKER	–	3
	–	4
TELEMETRY POINTS		
AMMETER (AM)	CURRENT	1

INTRUSION PANEL

DEVICE	STATUS INDICATION	POINT NUMBER
INTRUSION ALARM	ON	1
INTRUSION PANEL STATUS	TROUBLE	2
CONTROL POINTS		
INTRUSION ALARM	ARM	1
	DISARM	2

15KV CIRCUIT BREAKER SCADA POINTS

TOTAL 15KV AC CIRCUIT BREAKERS (FOR 4.8KV) = 9

DEVICE	STATUS INDICATION	POINT NUMBER
CIRCUIT BREAKER	OPENED	1
	CLOSED	2
CIRCUIT BREAKER FAILURE RELAY (50BF)	OPERATED	3
	FAILURE	4
UNDER VOLTAGE RELAY (27)	TRIPPED	5
	SET	6
PHASE BALANCE RELAY (47)	TRIPPED	7
	SET	8
OVERCURRENT RELAY (50/51)	OPERATED	9
	FAILURE	10
LOCAL/REMOTE SWITCH	LOCAL	11
	REMOTE	12
CIRCUIT BREAKER TRIP	TRIPPER	13
CIRCUIT BREAKER READY	READY	14
	–	15
CIRCUIT BREAKER WATCHDOG	WATCHDOG	16
	–	17
RESERVED	N.O.	18
	N.C.	19
RESERVED	N.O.	20
	N.C.	21
RESERVED	N.O.	22
	N.C.	23
CONTROL POINTS		
CIRCUIT BREAKER	OPEN	1
	CLOSE	2
RESERVED	–	3
	–	4
TELEMETRY POINTS		
AMMETER (AM)	CURRENT	1

BATTERY TRANSFER PANEL

DEVICE	STATUS INDICATION	POINT NUMBER
CONTACTOR #1	OPENED	1
	CLOSED	2
CONTACTOR #2	OPENED	3
	CLOSED	4
CONTROL POINTS		
CONTACTOR #1	OPEN	1
	CLOSE	2
CONTACTOR #2	OPEN	3
	CLOSE	4
TELEMETRY POINTS		
NONE		

NOTES:
1. THERE IS ONLY ONE LOCAL/REMOTE SELECTOR SWITCH.
2. THIS SCADA POINTS LIST IS FOR GUIDANCE ONLY. THE CONTRACTOR IS TO DEVELOP A FINAL POINT COUNT AS PART OF THE FINAL DESIGN AND ANY SEPTA SPECIFIC ADDITIONS AT THIS LOCATION.

50% SUBMISSION
NOT FOR CONSTRUCTION

SOUTHEASTERN PENNSYLVANIA TRANSPORTATION AUTHORITY
EM&C DIVISION
1234 MARKET ST, 13TH FL.
PHILADELPHIA, PA 19107

CHIEF ENGINEER - EM&C
CHIEF ENGINEERING OFFICER - B&B
CHIEF RAIL TRANSIT OFFICER
SYSTEM SAFETY
DIRECTOR OF ENGINEERING - B&B
MANAGER - ARCH / ENGINEERING
PROJECT MANAGER

HDR Engineering, Inc.
Philadelphia, PA

REV	DATE	DESCRIPTION	BY	CK'D	APD

DATE PRINTED: 10/21/2025

PARK
SUBWAY/ELEVATED TRAINS
TRACTION POWER SUBSTATION REHABILITATION
TRACTION POWER
SCADA POINTS LIST

SCALE: NTS	SCALE FACTOR: -
DATE: 08/22/2025	DRAWN BY: MLB
	CHECKED BY: YS
WORK ORDER NO.: 276482	
SHEET NUMBER: **TP244**	
DWG. NO.: 33 OF 35	
SHT. NO.: 250 OF 453	
ARCHIVE NO.:	
COMPUTER FILE NO.: 17AN-TP244	REV. NO.: -

STATUS: 50% SUBMISSION

C:\PWWORKING\PITTD\19615421\17AN-TP244.DWG

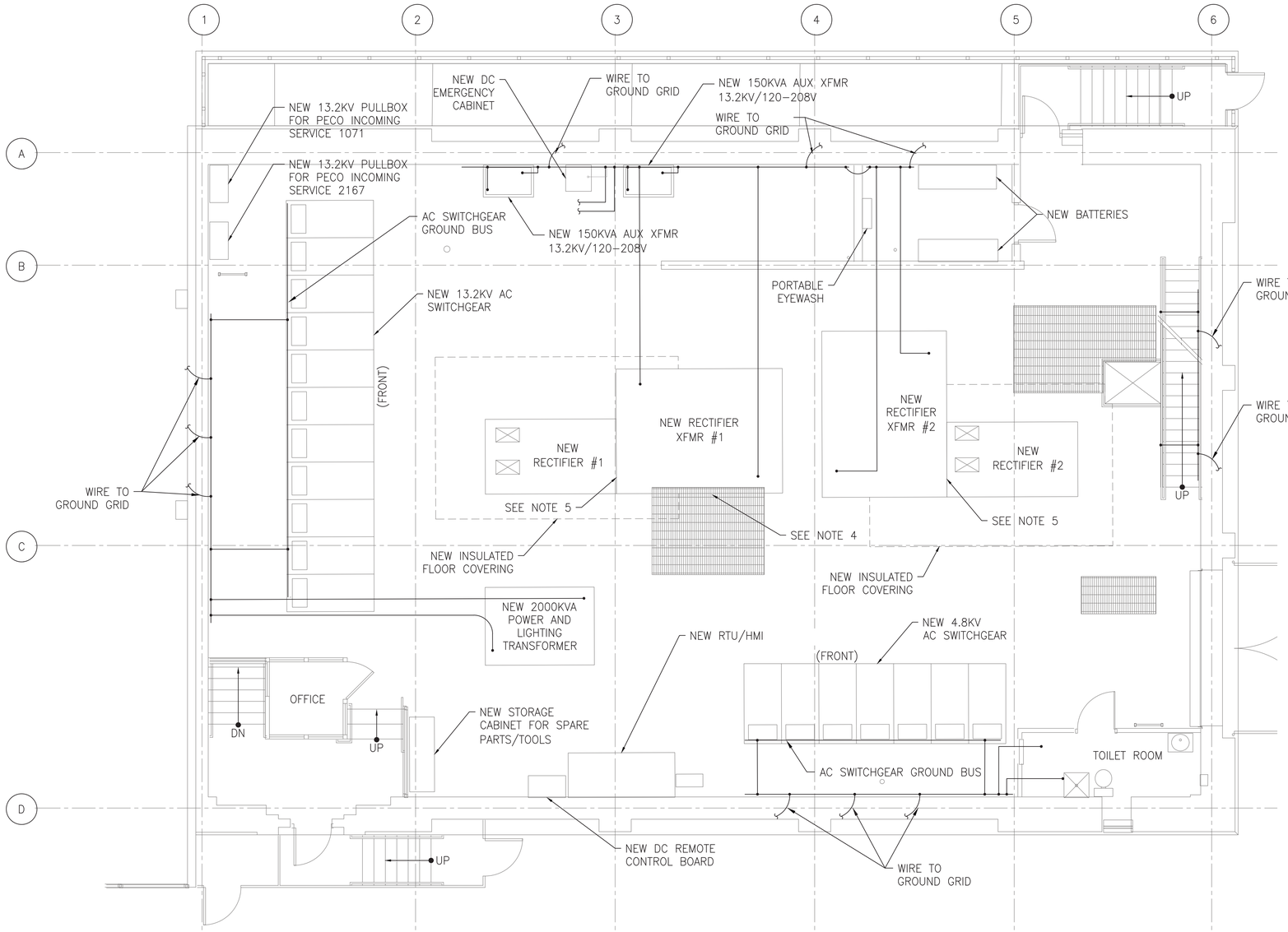

NOTES:

1. GROUND CABLES SHALL, IN GENERAL, RUN PARALLEL TO OR AT RIGHT ANGLES TO FLOORS, WALLS AND STRUCTURAL MEMBERS.
2. THIS DRAWING IS DIAGRAMMATIC ONLY. REFER TO SPECIFICATIONS FOR DETAIL.
3. GROUND CABLE PASSING THROUGH CONCRETE INTO EXPOSED AREAS SHALL BE PROTECTED AGAINST ABRASION AT POURED IN PLACE CONCRETE SLABS.
4. THE CONTRACTOR TO PROVIDE A DESIGN FOR A REDUCED SIZE GRATE IN ORDER FOR THE INSTALLATION OF NEW RECTIFIER TRANSFORMER SET #1 AND INSULATED FLOOR COVERING.
5. THE CONTRACTOR TO PROVIDE AN INSULATING BARRIER BETWEEN THE NEW RECTIFIER AND THE NEW RECTIFIER TRANSFORMER.
6. ALL ELECTRICAL ENCLOSURES THROUGHOUT THE SUBSTATION SHALL BE CONNECTED TO SUBSTATION'S GROUND BUS.

5 2.5 0 5

SCALE: 1"=5'

50% SUBMISSION
NOT FOR CONSTRUCTION

SOUTHEASTERN PENNSYLVANIA TRANSPORTATION AUTHORITY
EM&C DIVISION
1234 MARKET ST, 13TH FL.
PHILADELPHIA, PA 19107

CHIEF ENGINEER - EM&C

CHIEF ENGINEERING OFFICER - B&B

CHIEF RAIL TRANSIT OFFICER

SYSTEM SAFETY

DIRECTOR OF ENGINEERING - B&B

MANAGER - ARCH / ENGINEERING

PROJECT MANAGER

HDR Engineering, Inc.
Philadelphia, PA

REV	DATE	DESCRIPTION	BY	CKD	APD

DATE PRINTED: 10/21/2025

PARK
SUBWAY/ELEVATED TRAINS
TRACTION POWER SUBSTATION REHABILITATION
TRACTION POWER
GROUNDING PLAN

SCALE: AS SHOWN
SCALE FACTOR: -
DATE: 08/22/2025
DRAWN BY: MB
CHECKED BY: YL
WORK ORDER NO.: 276482
SHEET NUMBER: **TP245**
DWG. NO.: 34 OF 35
SHT. NO.: 251 OF 453
ARCHIVE NO.:
COMPUTER FILE NO.: 17AN-TP245
REV. NO.: -

STATUS: 50% SUBMISSION

C:\PW\WORKING\PITTD\196154217AN-TP245.DWG

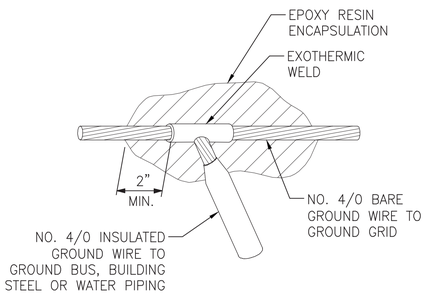

1 TP246 GROUND GRID EXOTHERMIC WELD CONNECTION WITH MOISTURE SEAL
SCALE: NONE

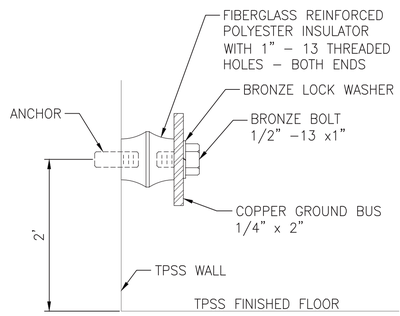

2 TP246 GROUND BUS MOUNTING
SCALE: NONE

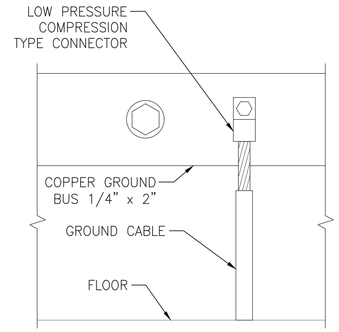

3 TP246 GROUND BUS CONNECTION FOR CAST IN CONCRETE SLAB GROUND WIRE AT AC SWITCHGEAR, RECTIFIER TRANSFORMER
SCALE: NONE

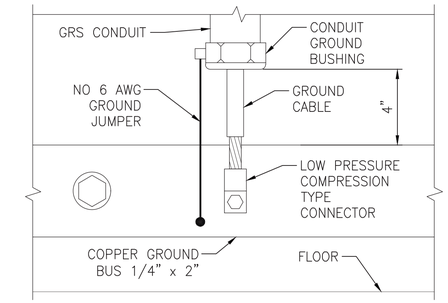

4 TP246 GROUND BUS CONNECTION IN EXPOSED GRS CONDUIT FOR EQUIPMENT GROUNDING
SCALE: NONE

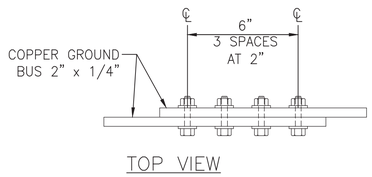

5 TP246 GROUND BUS SPLICE JOINT
SCALE: NONE

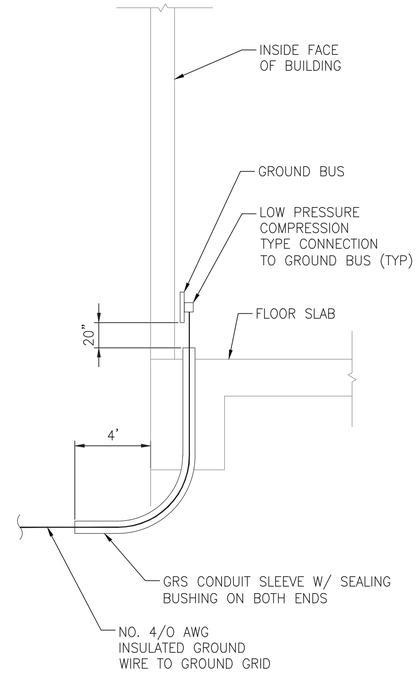

6 TP246 GROUND WIRE ROUTING FROM GROUND GRID TO GROUND BUS
SCALE: NONE

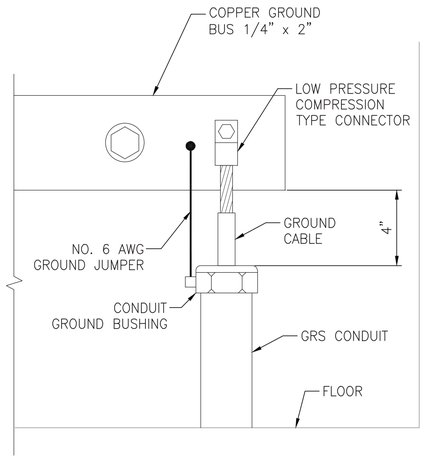

7 TP246 GROUND BUS CONNECTIONS FROM GROUND GRID
SCALE: NONE

50% SUBMISSION
NOT FOR CONSTRUCTION

C:\PW\WORKING\PITTD\D1961542\17AN-TP246.DWG

SOUTHEASTERN PENNSYLVANIA TRANSPORTATION AUTHORITY
EM&C DIVISION
1234 MARKET ST, 13TH FL.
PHILADELPHIA, PA 19107

CHIEF ENGINEER - EM&C
CHIEF ENGINEERING OFFICER - B&B
CHIEF RAIL TRANSIT OFFICER
SYSTEM SAFETY
DIRECTOR OF ENGINEERING - B&B
MANAGER - ARCH / ENGINEERING
PROJECT MANAGER

HDR Engineering, Inc.
Philadelphia, PA

REV	DATE	DESCRIPTION	BY	CK'D	APP'D

DATE PRINTED: 10/21/2025

PARK
SUBWAY/ELEVATED TRAINS
TRACTION POWER SUBSTATION REHABILITATION
TRACTION POWER
GROUNDING DETAILS

SCALE: NTS
SCALE FACTOR: -
DATE: 08/22/2025
DRAWN BY: DMW
CHECKED BY: YL
WORK ORDER NO.: 276482
SHEET NUMBER: **TP246**
DWG. NO.: 35 OF 35
SHT. NO.: 252 OF 453
ARCHIVE NO.:
COMPUTER FILE NO.: 17AN-TP-246
REV. NO.: -

STATUS: 50% SUBMISSION

SECURITY SYMBOLS LEGEND:

SYMBOL	DESCRIPTION
	CCTV CAMERA, FIXED WITH ENVIRONMENTAL DOME. PROVIDE BACK BOX AND RGS CONDUIT. (2) CAT6 CABLES PER CAMERA. INSTALL CONNECTOR AND COIL SPARE CABLE IN JUNCTION BOX. INDOOR SHALL BE CMP AND OUTDOOR SHALL BE CMX–OUTDOOR RATED JACKETS.
DC	DOOR CONTACT. PROVIDE UTP IN 3/4" RGS. SURFACE MOUNT.
AV	INDOOR/OUTDOOR SELF CONTAINED ARMORED SIREN/STROBE. PROVIDE UTP IN MIN 3/4" RGS.
KP	INTRUSION DETECTION KEY PAD. PROVIDE UTP IN 3/4" RGS TO PANEL
MD	MOTION DETECTOR. PROVIDE UTP IN MIN 3/4" RGS.
DC	DOOR CONTACT TO BE REMOVED.
SPB	SILENCE PUSH BUTTON TO BE REMOVED.

TELECOMMUNICATION SYMBOLS LEGEND:

SYMBOL	DESCRIPTION
▼	VOICE CONNECTION – SINGLE GANG JUNCTION BOX WITH RGS CONDUIT AS INDICATED ROUTED TO TELEPHONE BLOCK IN TELECOM CABINET.
W:	WALL MOUNTED PHONE OUTLET WITH (1) ONE CAT6 VOICE CABLE.
▼	VOICE CONNECTION TO BE REMOVED

LINETYPE CONVENTIONS:

- ---------- DEMO
- ———— EXISTING
- ———— NEW

ELECTRONICS ABBREVIATIONS:

AFF	ABOVE FINISHED FLOOR
AFG	ABOVE FINISHED GRADE
APPROX.	APPROXIMATELY
AWG	AMERICAN WIRE GAUGE
AVPA	AUDIO/VISUAL PUBLIC ADDRESS
BICSI	BUILDING INDUSTRY CONSULTING SERVICES INTERNATIONAL
C	CONDUIT
CAT	CATEGORY
CCD	CENTER CITY DISTRICT
CCTV	CLOSED CIRCUIT TELEVISION
CMP	COMMUNICATIONS PLENUM
CMX	COMMUNICATIONS RESIDENTIAL
COMM	COMMUNICATION
COTS	COMMERCIAL OFF THE SHELF
CPU	CENTRAL PROCESSING UNIT
CU	COPPER
DIA	DIAMETER
DVI	DIGITAL VISUAL INTERFACE
DVR	DIGITAL VIDEO RECORDER
EIA	ELECTRONIC INDUSTRIES ALLIANCE
EM	EMERGENCY
ETC	ET CETERA
(E)	EXISTING EQUIPMENT TO REMAIN
FACP	FIRE ALARM CONTROL PANEL
FMC	FLEXIBLE METALLIC CONDUIT
HMI	HUMAN MACHINE INTERFACE
IDP	INTRUSION DETECTION PANEL
IDS	INTRUSION DETECTION SYSTEM
JB	JUNCTION BOX
KBD	KEYBOARD
KVM	KEYBOARD VIDEO MOUSE
LB	POUND
LCD	LIQUID CRYSTAL DISPLAY
LFMC	LIQUID TIGHT FLEXIBLE METAL CONDUIT
ML	ELECTRO–MAGNETIC LOCK
MAX	MAXIMUM
MIN	MINIMUM
MON	MONITOR
(N)	NEW WORK/EQUIPMENT TO BE PROVIDED
NEC	NATIONAL ELECTRICAL CODE
NEMA	NATIONAL ELECTRICAL MANUFACTURERS ASSOCIATION
NFPA	NATIONAL FIRE PROTECTION ASSOCIATION
NOM	NOMINAL
NPT	NEW PAYMENT TECHNOLOGY
NO	NUMBER
NVR	NETWORK VIDEO RECORDER
OD	OUTER DIAMETER
PC	PERSONAL COMPUTER
PDU	POWER DISTRIBUTION UNIT
PP	PATCH PANEL
PTZ	PAN/TILT/ZOOM
(RE)	RELOCATED EXISTING
RGS	RIGID GALVANIZED STEEL
RTU	REMOTE TERMINAL UNIT
RX	REQUEST TO EXIT
SCADA	SUPERVISORY CONTROL AND DATA ACQUISITION
TA	TRANSPORTATION AGENT
TDMM	TELECOMMUNICATIONS DISTRIBUTION METHODS MANUAL
TIA	TELECOMMUNICATIONS INDUSTRY ASSOCIATION
TPSS	TRACTION POWER SUBSTATION
TVSS	TRANSIENT VOLTAGE SURGE SUPPRESSION
TWPR	TWISTED PAIR
TYP	TYPICAL
UPS	UNINTERRUPTIBLE POWER SUPPLY
USB	UNIVERSAL SERIAL BUS
UTP	UNSHIELDED TWISTED PAIR
VA	VOLT AMPERE
VAC	VOLTS ALTERNATING CURRENT
VGA	VIDEO GRAPHICS ARRAY
W/	WITH

GENERAL CONSTRUCTION NOTES:

1. COMPLY WITH LATEST APPLICABLE EDITION OF NFPA 70 (NEC), AND WITH THE REQUIREMENTS OF THE LOCAL AUTHORITY HAVING JURISDICTION, THE DEPARTMENT OF LICENSES AND INSPECTIONS (L & I) AND THE CITY OF PHILADELPHIA.
2. INSTALL ALL EQUIPMENT WITH ADEQUATE CLEARANCES FOR MAINTENANCE AND SERVICING AND IN ACCORDANCE WITH THE MANUFACTURER'S WRITTEN INSTRUCTIONS AND APPLICABLE CODES.
3. OBTAIN AND PAY FOR ALL PERMITS AND PAY FOR ALL COSTS OF MATERIALS. HANDLE, STORE AND PROTECT ALL EQUIPMENT TO PREVENT DAMAGE BEFORE AND DURING INSTALLATION IN ACCORDANCE WITH THE MANUFACTURER'S INSTRUCTIONS. PROTECT THE WORK SITE AND ALL WORK AGAINST ANY DAMAGE (INCLUDING BUT NOT LIMITED TO WATER, DUST, HEAT, FREEZING, ETC.) UNTIL FINAL COMPLETION AND ACCEPTANCE BY SEPTA.
4. REFER TO SPECIFICATIONS FOR MATERIALS TO BE USED AND METHODS OF INSTALLATION.
5. WHERE UTILITIES AND/OR SERVICES REQUIRE SHUTDOWN FOR THE WORK TO BE PERFORMED, NOTIFY THE SEPTA PROJECT MANAGER, IN WRITING, A MINIMUM OF TWO (2) WEEKS PRIOR TO THE SCHEDULED SHUTDOWN.
6. STORAGE OF MATERIALS AND/OR EQUIPMENT IS NOT PERMITTED OTHER THAN WITHIN THE LIMITS OF THE STAGING AREA OR CONFINES OF THE PROJECT WORK AREA AND AS APPROVED BY THE SEPTA PROJECT MANAGER.
7. REMOVE ALL CONSTRUCTION DEBRIS IN ACCORDANCE WITH APPROVED CONSTRUCTION WASTE MANAGEMENT PLAN.
8. KEEP A COPY OF THE CURRENT SET OF CONTRACT DOCUMENTS (WITH AS–BUILT INFORMATION) AT THE JOB SITE AT ALL TIMES.
9. REVIEW ALL PROJECT DOCUMENTS OF ALL TRADES FOR A THOROUGH UNDERSTANDING OF PROJECT AND ANY CROSS REFERENCING OF WORK. REVIEW ALL PROJECT REQUIREMENTS PRIOR TO BIDDING. REPORT ANY DISCREPANCIES BETWEEN DOCUMENTS TO THE SEPTA PROJECT MANAGER PRIOR TO BIDDING.
10. PRIOR TO DELIVERY OF ANY MATERIALS TO THE SITE, PROVIDE SAFETY DATA SHEETS FOR ALL REQUIRED ITEMS AND MATERIALS, USED IN THE WORK, TO THE SEPTA PROJECT MANAGER.
11. COMPLY WITH ALL SEPTA SAFETY STANDARDS AND INCLUDE ALL COSTS TO TRAIN AND QUALIFY PERSONNEL IN SEPTA SAFETY STANDARDS.
12. UTILIZE PENNSYLVANIA ONE CALL PRIOR TO ANY UNDERGROUND WORK INCLUDING TRENCHING OR DIGGING. COMPLIANCE WITH ALL LAWS, RULES AND REGULATIONS REGARDING UTILITY CROSSING SHALL BE CONSIDERED AS PART OF THIS CONTRACT. THE CONTRACTOR SHALL NOT SEEK ADDITIONAL REIMBURSEMENT FOR ALTERNATIVE MEANS OF INSTALLATION FOR COMPLIANCE.
13. THE CONTRACTOR SHALL ROPE AND ROD ALL CONDUITS INTENDED FOR REUSE AT THE EXPENSE OF THE CONTRACTOR. SEPTA SHALL BE PRESENT. IF A CONDUIT CANNOT BE REUSED THIS SHALL BE REPORTED TO THE SEPTA PROJECT MANAGER AT ONCE.

GENERAL TELECOMMUNICATIONS NOTES:

1. IF CONFLICTS ARE FOUND BETWEEN THE TELECOMMUNICATIONS DRAWINGS AND ANY OTHER DRAWINGS ASSOCIATED WITH THE PROJECT, NOTIFY THE SEPTA PROJECT MANAGER AT ONCE AND FIELD VERIFY PRIOR TO INSTALLATION OF ANY PATHWAY AND/OR DEVICE.
2. JUNCTION AND PULL BOXES ARE NOT NECESSARILY ALL INDICATED. PROVIDE JUNCTION BOXES AND PULL BOXES WHERE MANDATED BY THE NEC, AND AS REQUIRED FOR EASE OF INSTALLATION. PROVIDE BOXES SIZED IN ACCORDANCE WITH ARTICLE 314 OF THE NEC AND PER APPROVED CONTRACTOR COORDINATION DRAWINGS.
3. CONCEAL CONDUIT OR CABLE EXTENSIONS TO THE GREATEST EXTENT PRACTICABLE. KEEP SURFACE MOUNTED DEVICES, BOXES, AND EXPOSED SURFACE MOUNTED METAL RACEWAYS TO A MINIMUM AND ONLY AS APPROVED IN ADVANCED BY THE SEPTA PROJECT MANAGER.
4. VERIFY ALL DIMENSIONS IN THE FIELD AND REPORT DISCREPANCIES, IF ANY, TO THE SEPTA PROJECT MANAGER FOR CLARIFICATION PRIOR TO STARTING ANY WORK.
5. ALL INTERIOR AND EXTERIOR RACEWAY SHALL BE RGS CONDUIT. UTILIZE FMC AND LFMC IN LIMITED LENGTHS AS NECESSARY, OR AS REQUIRED BY THE NEC. USE MINIMUM CONDUIT SIZE OF 3/4", UNLESS OTHERWISE NOTED. DO NOT EXCEED CONDUIT FILL RATIO PER THE NEC.
6. PATCH AND REPAIR ALL OPENINGS LEFT IN EXISTING SURFACES BY THE REMOVAL OF EXISTING SURFACE AND OR SEMI–RECESSED BOXES OR RACEWAYS AND FINISH SUCH AREAS TO MATCH ADJACENT SURFACES.
7. MAINTAIN MINIMUM BEND RADIUS OF 10 TIMES THE OUTER DIAMETER FOR CONDUITS GREATER THAN 2" DIAMETER AND 6 TIMES THE OUTER DIAMETER FOR CONDUITS EQUAL OR LESS THAN 2" DIAMETER.
8. REAM AND BUSH THE ENDS OF ALL CONDUITS. PROVIDE AND LEAVE IN PLACE PULL STRINGS IN ALL EMPTY CONDUITS.
9. PROVIDE HANGERS, ANCHORS, MOUNTING HARDWARE, GROUND LUGS AND STRAPS AS REQUIRED TO ENSURE PROPER INSTALLATION OF PATHWAY COMPONENTS. INSTALL ALL COMPONENTS AS PER MANUFACTURER'S RECOMMENDATIONS AND PER ALL APPLICABLE CODES.
10. GROUND ALL CONDUITS, CABINETS AND EQUIPMENT AS PER MANUFACTURER'S RECOMMENDATIONS AND PER ALL APPLICABLE CODES.
11. PROPERLY LABEL ALL CABLES, RECEPTACLES, CONNECTION BLOCKS AND PATCH PANELS IN ACCORDANCE WITH TIA–606B AND BICSI TDMM 13TH EDITION.
12. PROVIDE WHITE LABEL WITH TYPE WRITTEN LEGIBLE CHARACTERS, PRINTED WITH NON–SMEAR INK AND INDUSTRIAL GRADE SELF ADHESIVE BACKING. PROVIDE ROOM NUMBERS AND CABLE LENGTHS FOR EACH END OF THE INSTALLED CABLE.
13. PRIOR TO SYSTEM ACCEPTANCE, SUBMIT AN AS–BUILT LABEL REPORT PROVIDING THE ROOM NUMBERS AND THE CABLE LENGTHS FOR EACH OF THE INSTALLED CABLES.
14. INSTALLATION OF CATEGORY 6 UTP CABLE SHALL BE IN ACCORDANCE WITH EIA/TIA GUIDELINES. CABLE INSTALLATION AND TERMINATIONS THAT DO NOT COMPLY SHALL BE REPLACED BY THE CONTRACTOR AT NO ADDITIONAL COST TO SEPTA.
    - 14.1. THE MAXIMUM PULLING TENSION FOR A SINGLE CABLE SHALL NOT EXCEED 25 POUNDS.
    - 14.2. THE MINIMUM BENDING RADIUS OF THE CABLE SHALL NOT BE LESS THAN 4 TIMES THE OUTSIDE DIAMETER OF THE CABLE.
    - 14.3. THE CABLE SHALL BE INSTALLED WITHOUT KINKS OR TWISTS AND THE APPLICATION OF CABLE TIES SHALL NOT DEFORM THE CABLE BUNDLE. CONDUITS SHALL TRANSITION INTO CABLE TRAYS USING CONDUIT END BELLS. NO CABLE SHALL BE INSTALLED OVER ROUGH CONDUIT EDGES IN ANY TRANSITION.
    - 14.4. STRIP BACK ONLY AS MUCH CABLE JACKET AS IS REQUIRED TO TERMINATE THE CABLE. CABLE PAIRS SHALL NOT BE UNTWISTED MORE THAN 1/2 INCH.
    - 14.5. CABLES SHALL BE TESTED PER THE SPECIFICATIONS. CABLES WHICH DO NOT PASS TESTS SHALL BE REPLACED OR RECTIFIED BY THE CONTRACTOR AT NO ADDITIONAL COST.
    - 14.6. THE CONTRACTOR SHALL NOT INSTALL ANY NEW CATEGORY 6 CABLE AT LENGTHS GREATER THAN 90 METERS FROM PATCH PANEL TO OUTLET BOX. THE CONTRACTOR SHALL BRING ANY CONDITIONS EXCEEDING THE CABLE LIMIT DISTANCE TO THE SEPTA PROJECT MANAGER.

50% SUBMISSION
NOT FOR CONSTRUCTION

SOUTHEASTERN PENNSYLVANIA TRANSPORTATION AUTHORITY
EM&C DIVISION
1234 MARKET ST, 13TH FL.
PHILADELPHIA, PA 19107

CHIEF ENGINEER - EM&C
CHIEF ENGINEERING OFFICER - B&B
CHIEF RAIL TRANSIT OFFICER
SYSTEM SAFETY
DIRECTOR OF ENGINEERING - B&B
MANAGER - ARCH / ENGINEERING
PROJECT MANAGER

HDR Engineering, Inc.
Philadelphia, PA

ARORA ENGINEERS
48 WILMINGTON WEST CHESTER PIKE
CHADDS FORD, PA 19317
PHONE 610.485.0600
FAX 610.485.0900

REV	DATE	DESCRIPTION	BY	CK'D	APD

DATE PRINTED: 10/21/2025

PARK
SUBWAY/ELEVATED TRAINS
TRACTION POWER SUBSTATION REHABILITATION
COMMUNICATIONS
NOTES SYMBOLS AND ABBREVIATIONS

SCALE: AS SHOWN	SCALE FACTOR: 1:1
DATE: 08/22/2025	DRAWN BY: DC
	CHECKED BY: EH
WORK ORDER NO.: 276482	
SHEET NUMBER: **COM200**	
DWG. NO.: # OF 34	
SHT. NO.: ### OF 453	
ARCHIVE NO.:	
COMPUTER FILE NO.: 17AN-COM200	REV. NO.: ---

STATUS: 50% SUBMISSION

C:\PW\WORKING\PITTD\19588\517AN-COM200.DWG

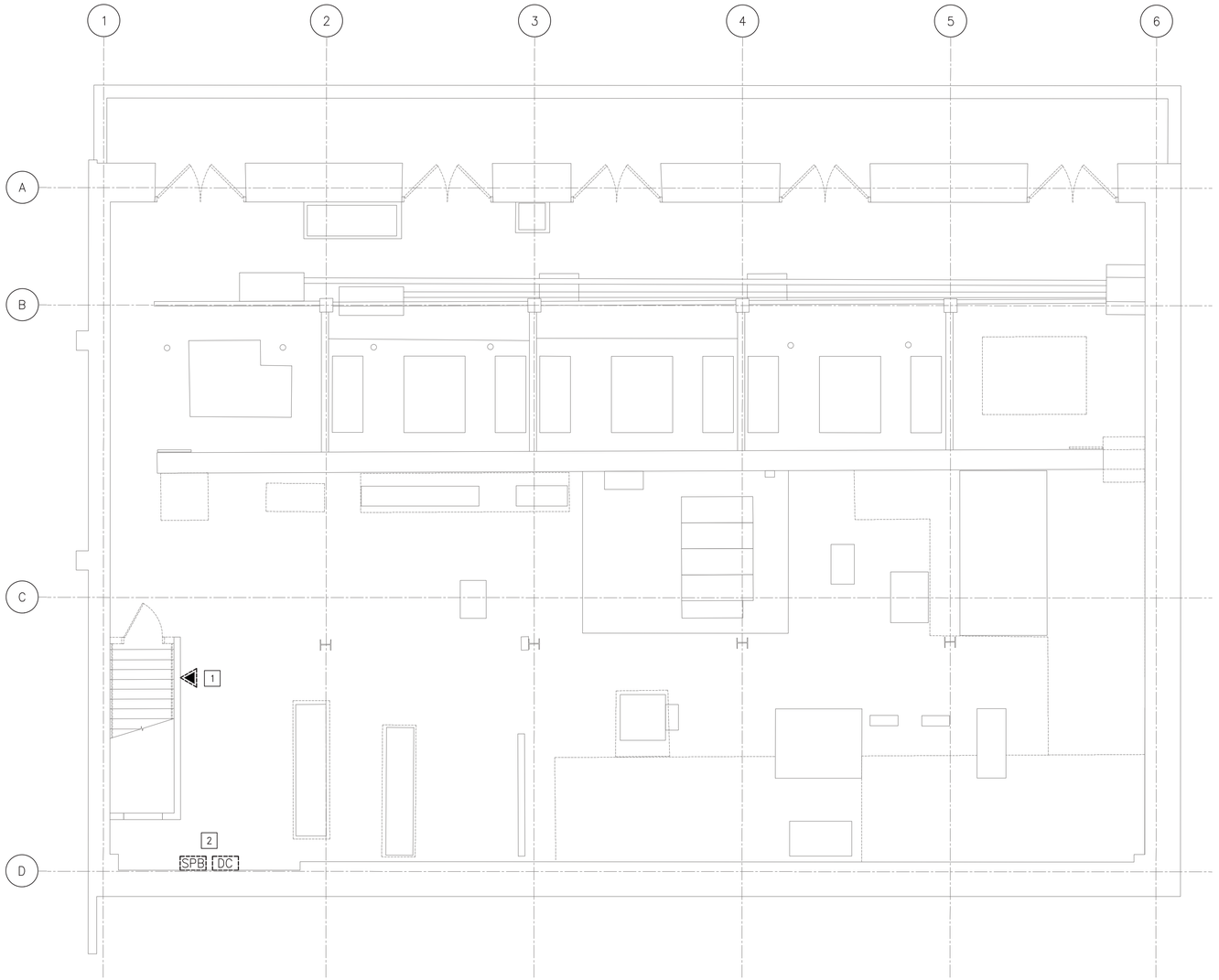

1 COM201 DEMOLITION BASEMENT FLOOR PLAN
SCALE: 3/16" = 1'-0"

GENERAL NOTES:

1. FOR GENERAL NOTES, SYMBOLS AND ABBREVIATIONS REFER TO DRAWING COM200.
2. REMOVE ALL CONDUITS, CABLES, STATION JACKS AND BOXES RELATED TO TELECOMMUNICATIONS TO SOURCE.
3. DISCARD ALL REMOVED EQUIPMENT.

KEYED NOTES:

[1] REMOVE PHONE, CABLE AND ASSOCIATED APPURTENANCES TO SOURCE.

[2] REMOVE DOOR CONTACT, SILENCE PUSH BUTTON, CONDUIT AND WIRING BACK TO SOURCE.

6 4 2 0 6
SCALE: 3/16"=1'0"

50% SUBMISSION
NOT FOR CONSTRUCTION

SOUTHEASTERN PENNSYLVANIA TRANSPORTATION AUTHORITY
EM&C DIVISION
1234 MARKET ST, 13TH FL.
PHILADELPHIA, PA 19107

CHIEF ENGINEER - EM&C

CHIEF ENGINEERING OFFICER - B&B

CHIEF RAIL TRANSIT OFFICER

SYSTEM SAFETY

DIRECTOR OF ENGINEERING - B&B

MANAGER - ARCH / ENGINEERING

PROJECT MANAGER

HDR Engineering, Inc.
Philadelphia, PA

ARORA ENGINEERS
65 WILMINGTON WEST CHESTER PIKE
CHADDS FORD, PA 19317
PHONE 610.459.7600
FAX 610.459.7900

REV	DATE	DESCRIPTION	BY	CKD	APD

DATE PRINTED: 10/21/2025

PARK
SUBWAY/ELEVATED TRAINS
TRACTION POWER SUBSTATION REHABILITATION
COMMUNICATIONS
DEMOLITION BASEMENT FLOOR PLAN

SCALE: AS SHOWN
SCALE FACTOR: 1:1
DATE: 08/22/2025
DRAWN BY: DC
CHECKED BY: EH
WORK ORDER NO.: 276482
SHEET NUMBER: **COM201**
DWG. NO.: # OF 34
SHT. NO.: ### OF 453
ARCHIVE NO.:
COMPUTER FILE NO.: 17AN-COM201
REV. NO.: ----

STATUS: 50% SUBMISSION

C:\PW\WORK\NGI\PITTD195890\517AN-COM201.DWG

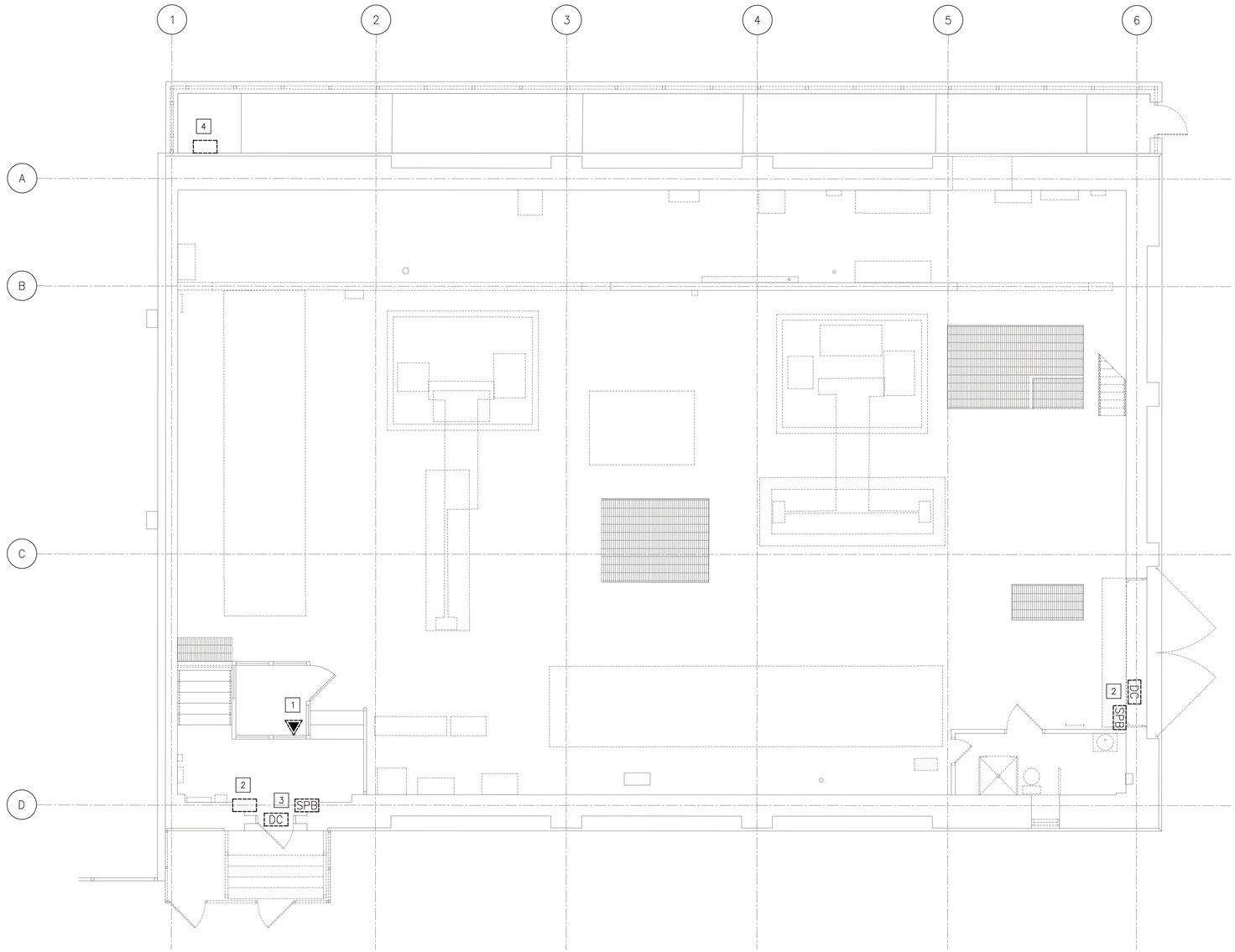

1 COM202 DEMOLITION FIRST FLOOR PLAN
SCALE: 3/16" = 1'-0"

GENERAL NOTES:

1. FOR GENERAL NOTES, SYMBOLS AND ABBREVIATIONS REFER TO DRAWING COM200.
2. REMOVE ALL CONDUITS, CABLES, STATION JACKS AND BOXES RELATED TO TELECOMMUNICATIONS TO SOURCE.
3. DISCARD ALL REMOVED EQUIPMENT.

KEYED NOTES:

1. REMOVE PHONE, CABLE AND ASSOCIATED APPURTENANCES TO SOURCE.
2. EXISTING DOOR INTRUSION ALARM PANEL AND ASSOCIATED EQUIPMENT AND WIRING TO BE REMOVED.
3. REMOVE DOOR CONTACT, SILENCE PUSH BUTTON, CONDUIT AND WIRING BACK TO SOURCE.
4. EXISTING TELECOM DEMARCATION BOX. REMOVE BOX AND PUNCH DOWN BLOCKS. PROTECT INCOMING PHONE SERVICE CABLE FROM LAST TELEPHONE POLE.

6 4 2 0 6
SCALE: 3/16"=1'0"

50% SUBMISSION
NOT FOR CONSTRUCTION

SOUTHEASTERN PENNSYLVANIA TRANSPORTATION AUTHORITY
EM&C DIVISION
1234 MARKET ST, 13TH FL, PHILADELPHIA, PA 19107

CHIEF ENGINEER - EM&C
CHIEF ENGINEERING OFFICER - B&B
CHIEF RAIL TRANSIT OFFICER
SYSTEM SAFETY
DIRECTOR OF ENGINEERING - B&B
MANAGER - ARCH | ENGINEERING
PROJECT MANAGER

HDR Engineering, Inc.
Philadelphia, PA

ARORA
ARORA ENGINEERS
61 WILMINGTON-WEST CHESTER PIKE
CHADDS FORD, PA 19317
PHONE 610.459.7000
FAX 610.459.7090

REV	DATE	DESCRIPTION	BY	CK'D	AP'D

PARK
SUBWAY/ELEVATED TRAINS
TRACTION POWER SUBSTATION
REHABILITATION
COMMUNICATIONS
DEMOLITION FIRST FLOOR PLAN

SCALE: AS SHOWN
SCALE FACTOR: 1:1
DATE: 08/22/2025
DRAWN BY: DC
CHECKED BY: EH
WORK ORDER NO.: 276482
SHEET NUMBER: **COM202**
DWG. NO.: # OF 34
SHT. NO.: ### OF 453
ARCHIVE NO.:
COMPUTER FILE NO.: 17AN-COM202
REV. NO.: ----

DATE PRINTED: 10/21/2025
STATUS: 50% SUBMISSION
C:\PWWORKING\PITT\D1958905\17AN-COM202.DWG

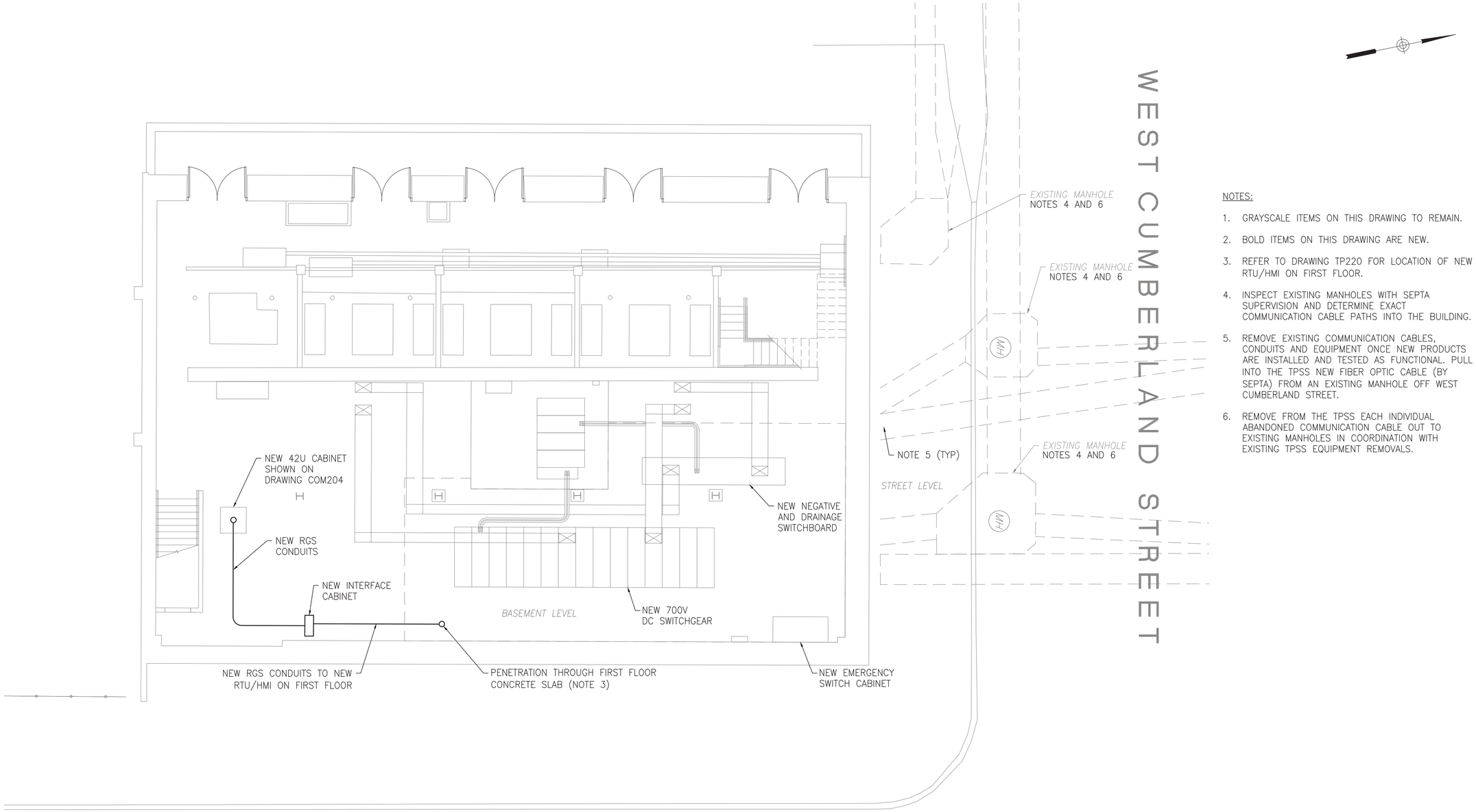

NOTES:

1. GRAYSCALE ITEMS ON THIS DRAWING TO REMAIN.
2. BOLD ITEMS ON THIS DRAWING ARE NEW.
3. REFER TO DRAWING TP220 FOR LOCATION OF NEW RTU/HMI ON FIRST FLOOR.
4. INSPECT EXISTING MANHOLES WITH SEPTA SUPERVISION AND DETERMINE EXACT COMMUNICATION CABLE PATHS INTO THE BUILDING.
5. REMOVE EXISTING COMMUNICATION CABLES, CONDUITS AND EQUIPMENT ONCE NEW PRODUCTS ARE INSTALLED AND TESTED AS FUNCTIONAL. PULL INTO THE TPSS NEW FIBER OPTIC CABLE (BY SEPTA) FROM AN EXISTING MANHOLE OFF WEST CUMBERLAND STREET.
6. REMOVE FROM THE TPSS EACH INDIVIDUAL ABANDONED COMMUNICATION CABLE OUT TO EXISTING MANHOLES IN COORDINATION WITH EXISTING TPSS EQUIPMENT REMOVALS.

6 3 0 6

SCALE: 1"=6'

50% SUBMISSION
NOT FOR CONSTRUCTION

SOUTHEASTERN PENNSYLVANIA TRANSPORTATION AUTHORITY
EM&C DIVISION
1234 MARKET ST, 13TH FL.
PHILADELPHIA, PA 19107

CHIEF ENGINEER - EM&C

CHIEF ENGINEERING OFFICER - B&B

CHIEF RAIL TRANSIT OFFICER

SYSTEM SAFETY

DIRECTOR OF ENGINEERING - B&B

MANAGER - ARCH / ENGINEERING

PROJECT MANAGER

HDR Engineering, Inc.
Philadelphia, PA

REV	DATE	DESCRIPTION	BY	CKD	APD

DATE PRINTED: 10/21/2025

PARK
SUBWAY/ELEVATED TRAINS
TRACTION POWER SUBSTATION REHABILITATION
COMMUNICATIONS
INTERFACE CABINET & CABLE PLANS

SCALE: AS SHOWN
SCALE FACTOR: -
DATE: 08/22/2025
DRAWN BY: MLB
CHECKED BY: MW
WORK ORDER NO.: 276482
SHEET NUMBER: **COM203**
DWG. NO.: # OF 34
SHT. NO.: ### OF 453
ARCHIVE NO.:
COMPUTER FILE NO.: 17AN-COM203
REV. NO.: -

STATUS: 50% SUBMISSION

C:\PW\WORKING\PITTI0195895\17AN-COM203.DWG

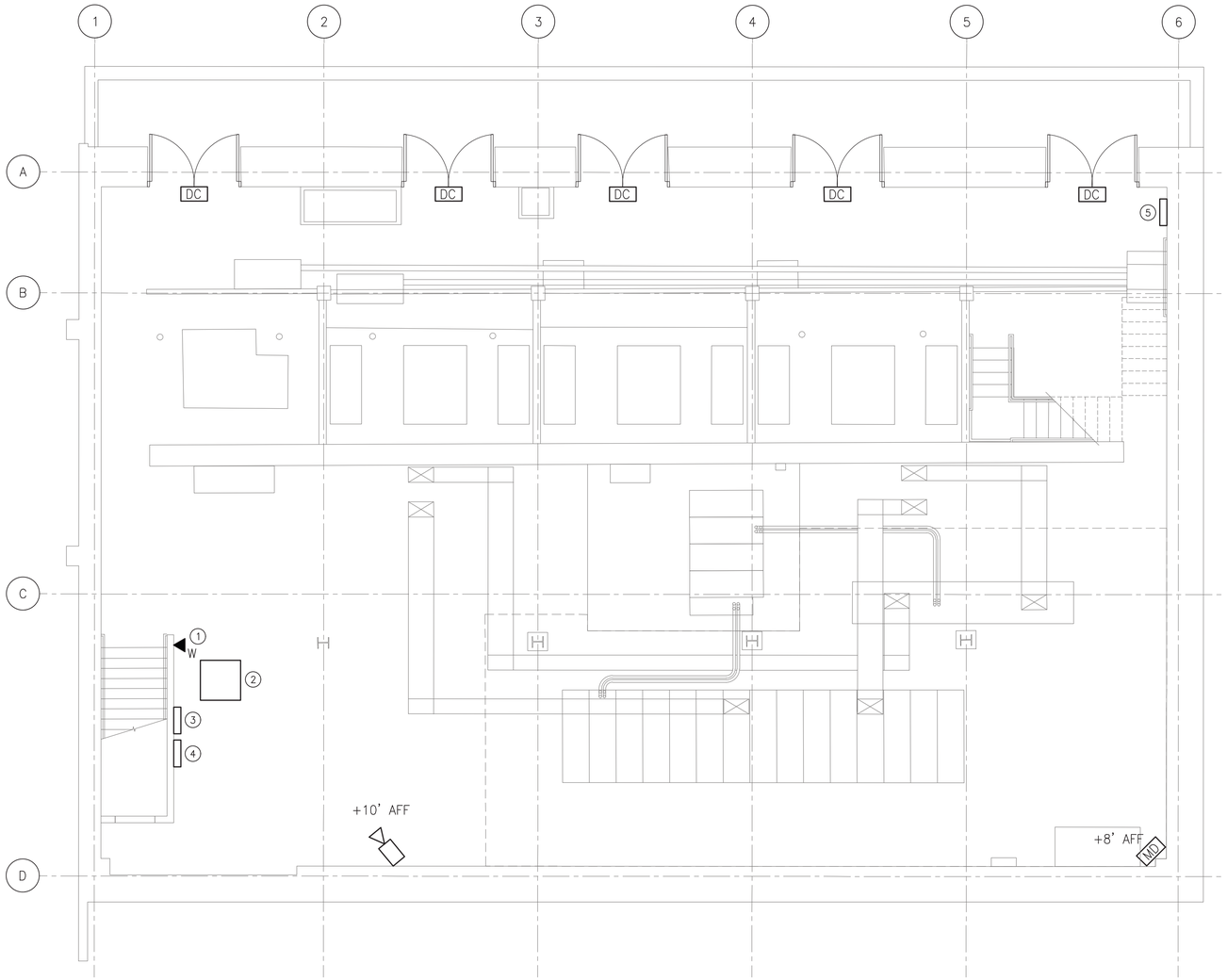

1 COM204 BASEMENT PROPOSED FLOOR PLAN
SCALE: 3/16" = 1'-0"

GENERAL NOTES:

1. FOR GENERAL NOTES, SYMBOLS AND ABBREVIATIONS REFER TO DRAWING COM200.
2. COORDINATE ALL FINAL LOCATIONS, MOUNTING HEIGHTS AND DETAILS, EQUIPMENT QUANTITIES WITH SEPTA C&S. ENSURE CAMERA LINE OF SIGHT.

KEYED NOTES:

(1) NEW TELEPHONE SHALL UTILIZE THE EXISTING INCOMING SERVICE CONNECTION. ALL CABLE SHALL BE IN MINIMUM 3/4" RGS CONDUIT. INSTALL (N) CAT6 CABLE TO (N) TERMINATION 110 BLOCK IN (N) BUILDING ENTRANCE TERMINAL.

(2) FURNISH AND INSTALL NEW 42U, LOCKABLE CABINET. FURNISH AND INSTALL FOLLOWING COMPONENTS PER SPECIFICATION:

1. CCTV LCD/KEYBOARD CONSOLE.
2. RIGID PC.
3. CAT 6 PATCH PANEL.
4. SHELF MOUNTED MEDIA CONVERTER.
5. 2200VA UPS.

COORDINATE FINAL EQUIPMENT LIST WITH SEPTA C&S.

(3) FURNISH AND INSTALL A 12 POSITION TERMINAL BLOCK HOUSED IN A LOCKABLE 8" X 8" X 4" NEMA 3R ENCLOSURE. EXTEND SIGNAL CABLE FROM THE IDS PANEL AND TERMINATE ON TERMINAL BLOCK FOR IDS MONITORING. COORDINATE FINAL CONNECTION TO THE RTU.

(4) INTRUSION DETECTION PANEL. ALL COMPONENT CABLING SHALL BE IN MINIMUM OF 3/4" RGS CONDUIT. PROGRAM SYSTEM PER SPECIFICATION 13700.

(5) BUILDING ENTRANCE TERMINAL WITH LIGHTNING PROTECTION AND 110 TELEPHONE BLOCK FOR APPROPRIATE PAIR COUNT IN A LOCKABLE NEMA 3R ENCLOSURE. CREATE (N) PENETRATION THROUGH BUILDING CLOSEST TO TELEPHONE POLE INTO BASEMENT. FIRESTOP/SEAL AROUND CABLE PENETRATION.

6 4 2 0 6
SCALE: 3/16"=1'0"

50% SUBMISSION
NOT FOR CONSTRUCTION

SOUTHEASTERN PENNSYLVANIA TRANSPORTATION AUTHORITY
EM&C DIVISION
1234 MARKET ST, 13TH FL.
PHILADELPHIA, PA 19107

CHIEF ENGINEER - EM&C
CHIEF ENGINEERING OFFICER - B&B
CHIEF RAIL TRANSIT OFFICER
SYSTEM SAFETY
DIRECTOR OF ENGINEERING - B&B
MANAGER - ARCH / ENGINEERING
PROJECT MANAGER

HDR Engineering, Inc.
Philadelphia, PA
ARORA ENGINEERS
45 WILMINGTON WEST CHESTER PIKE
CHADDS FORD, PA 19317
PHONE 610.485.2600
FAX 610.485.2900

REV	DATE	DESCRIPTION	BY	CK'D	APD

DATE PRINTED: 10/21/2025

PARK
SUBWAY/ELEVATED TRAINS
TRACTION POWER SUBSTATION REHABILITATION
COMMUNICATIONS
PROPOSED BASEMENT FLOOR PLAN

SCALE: AS SHOWN | SCALE FACTOR: 1:1
DATE: 08/22/2025 | DRAWN BY: DC | CHECKED BY: EH
WORK ORDER NO.: 276482
SHEET NUMBER: **COM204**
DWG. NO.: # OF 34
SHT. NO.: ### OF 453
ARCHIVE NO.:
COMPUTER FILE NO.: 17AN-COM204 | REV. NO.: ---

STATUS: 50% SUBMISSION

C:\PW\WORKING\PITTD1958905\17AN-COM204.DWG

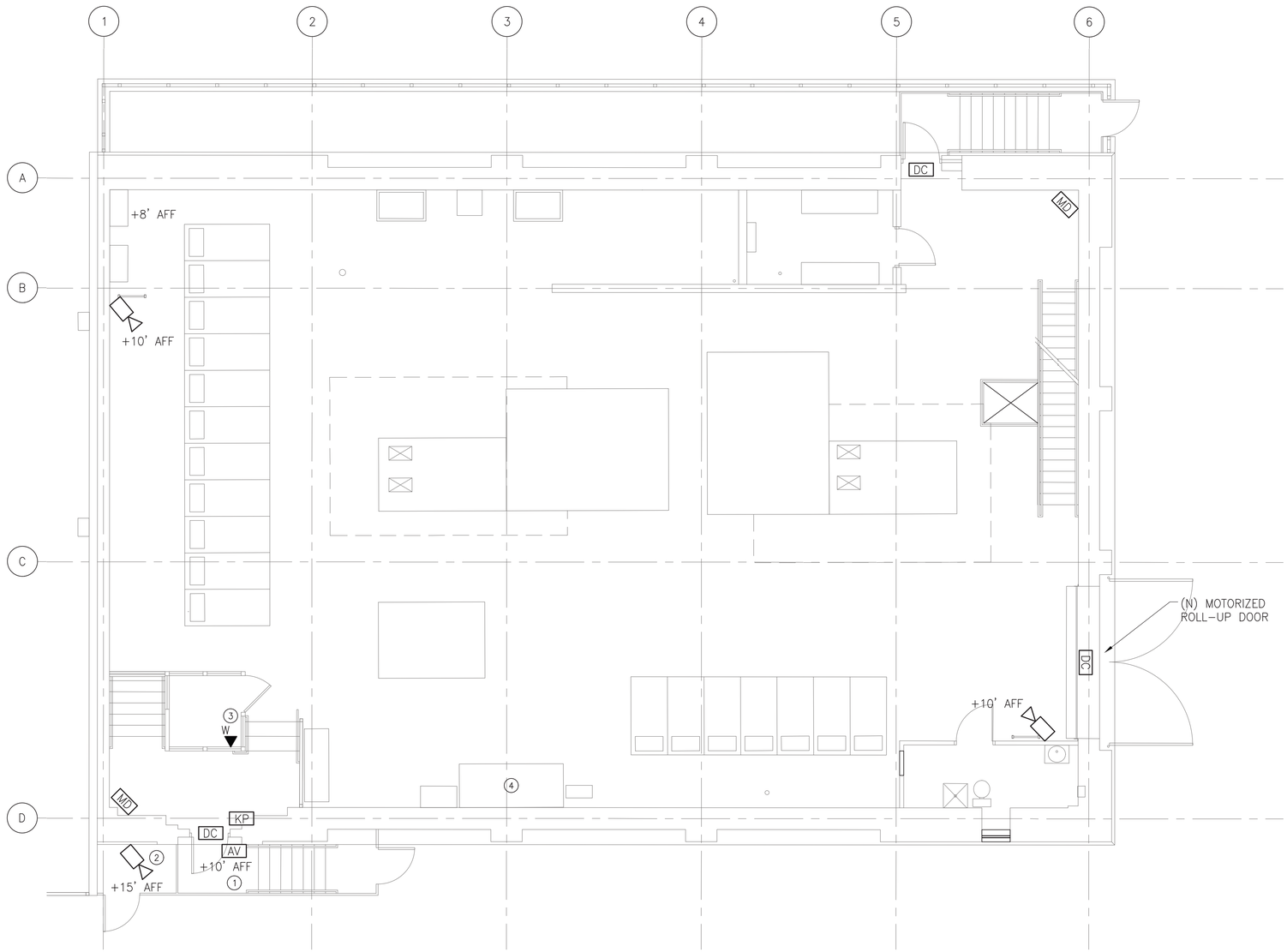

1 COM205 PROPOSED FIRST FLOOR PLAN
SCALE: 3/16" = 1'-0"

GENERAL NOTES:

1. FOR GENERAL NOTES, SYMBOLS AND ABBREVIATIONS REFER TO DRAWING COM200.
2. COORDINATE ALL FINAL LOCATIONS, MOUNTING HEIGHTS AND DETAILS, EQUIPMENT QUANTITIES WITH SEPTA C&S. ENSURE CAMERA LINE OF SIGHT.

KEYED NOTES:

1. ALL AUDIO VISUAL STROBES SHALL ALARM AFTER 60 SECONDS IF ANY OF THE DOOR CONTACTS ARE BROKEN AND THE ALARM IS NOT DISARMED AND THE PANEL SHALL AUTOMATICALLY SIGNAL THE SEPTA MONITORING STATION VIA THE RTU CONNECTION.
2. CCTV CAMERA SHALL BE MOUNTED TO THE BUILDING FACADE 15 FEET ABOVE FINISHED GRADE TO MONITOR ENTRANCE. TWO (2) CAT6 CABLES IN 1" RGS CONDUIT SHALL BE ROUTED TO SURGE PROTECTOR DEVICES BEFORE LANDING ON THE NEW PATCH PANEL LOCATED IN EQUIPMENT CABINET. CABLE TYPE SHALL BE CMX OUTDOOR RATED.
3. NEW TELEPHONE SHALL UTILIZE THE EXISTING INCOMING SERVICE CONNECTION. ALL CABLE SHALL BE IN MINMUM 3/4" RGS CONDUIT. INSTALL (N) CAT6 CABLE TO (N) TERMINATION 110 BLOCK IN (N) BUILDING ENTRANCE TERMINAL.
4. SCADA RTU. REFER TO TRACTION POWER DRAWINGS FOR DETAILED DRAWINGS.

6 4 2 0 6
SCALE: 3/16"=1'0"

50% SUBMISSION
NOT FOR CONSTRUCTION

SOUTHEASTERN PENNSYLVANIA TRANSPORTATION AUTHORITY
EM&C DIVISION
1234 MARKET ST, 13TH FL, PHILADELPHIA, PA 19107

CHIEF ENGINEER - EM&C
CHIEF ENGINEERING OFFICER - B&B
CHIEF RAIL TRANSIT OFFICER
SYSTEM SAFETY
DIRECTOR OF ENGINEERING - B&B
MANAGER - ARCH / ENGINEERING
PROJECT MANAGER

HDR Engineering, Inc.
Philadelphia, PA
ARORA ENGINEERS
61 WILMINGTON-WEST CHESTER PIKE
CHADDS FORD, PA 19317
PHONE 610.459.7600
FAX 610.459.7990

REV	DATE	DESCRIPTION	BY	CK'D	AP'D

DATE PRINTED: 10/21/2025

PARK
SUBWAY/ELEVATED TRAINS
TRACTION POWER SUBSTATION
REHABILITATION
COMMUNICATIONS
PROPOSED FIRST FLOOR PLAN

SCALE: AS SHOWN	SCALE FACTOR: 1:1
DATE: 08/22/2025	DRAWN BY: DC
	CHECKED BY: EH
WORK ORDER NO.: 276482	
SHEET NUMBER: **COM205**	
DWG. NO.: # OF 34	
SHT. NO.: ### OF 453	
ARCHIVE NO.:	
COMPUTER FILE NO.: 17AN-COM205	REV. NO.: ---

STATUS: 50% SUBMISSION

C:\PWWORKING\PITT\D1958905\17AN-COM205.DWG

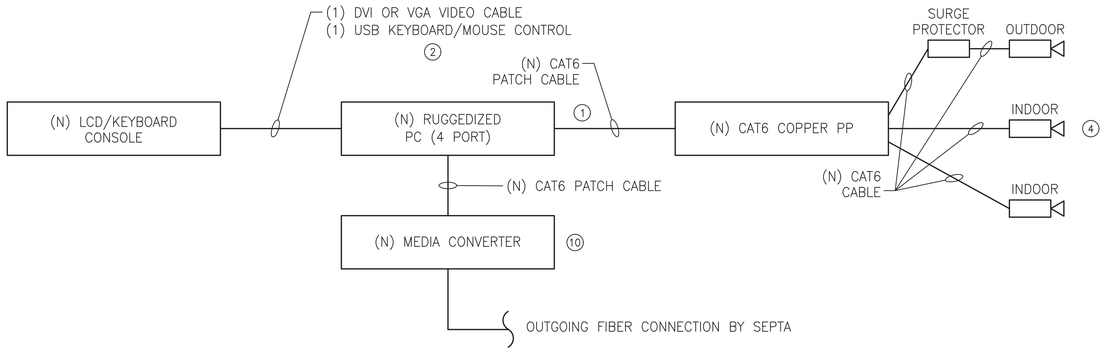

1 COM206 CCTV BLOCK DIAGRAM
SCALE: NOT TO SCALE

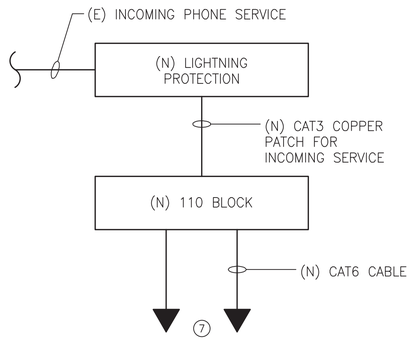

2 COM206 VOICE BLOCK DIAGRAM
SCALE: NOT TO SCALE

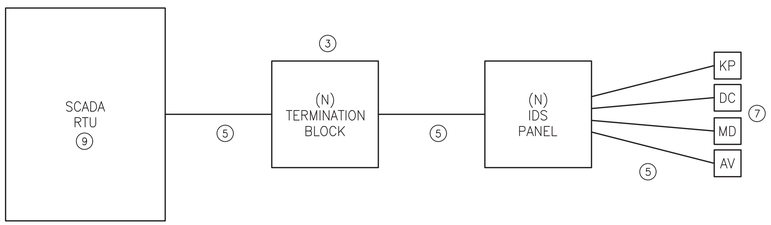

3 COM206 INTRUSION DETECTION BLOCK DIAGRAM
SCALE: NOT TO SCALE

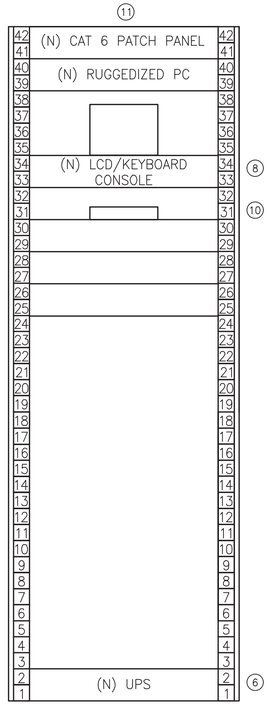

4 COM206 TELECOM CABINET ELEVATION
SCALE: NOT TO SCALE

KEYED NOTES:

1. COORDINATE ALL HARDWARE AND FINAL QUANTITIES WITH SEPTA C&S.
2. FURNISH AND INSTALL GENETIC PRO BASE SOFTWARE ON PC, (1) CAMERA LICENSE PER CAMERA AND (1) FEDERATION LICENSE FOR THE SITE.
3. THE CONTRACTOR SHALL FURNISH AND INSTALL SIGNAL CABLE FROM IDS PANEL TO TERMINATION BLOCK. COORDINATE CONNECTION TO RTU.
4. REFER TO DRAWINGS COM204 AND COM205 FOR PROPER QUANTITIES. UTILIZE CMX OUTDOOR JACKET FOR OUTDOOR CAMERAS. OUTDOOR CABLE MAY NOT EXCEED 50 FEET INSIDE BUILDING.
5. ALL MULTI-CONDUCTOR CABLE SHALL BE IN 3/4" RGS. ALL SECURITY CABLE SHALL BE LOW IMPEDANCE AND A MINIMUM OF NO. 18 AWG CONDUCTOR SIZE. CONDUCTOR QUANTITIES ARE PER MANUFACTURER'S SPECIFICATION.
6. NETWORK ADDRESSABLE UPS. APPROXIMATELY 2200VA AND SHALL LAST MINIMUM 70 MINUTES. PHYSICAL SIZE SHALL MAINTAIN 2 RACK UNITS SPACE WITH NECESSARY BATTERY PACK QUANTITIES.
7. REFER TO DRAWINGS COM204 AND COM205 FOR PROPER QUANTITIES.
8. FURNISH AND INSTALL RACK-MOUNTED 17" LCD/KEYBOARD CONSOLE.
9. REFER TO TRACTION POWER DRAWINGS FOR SCADA RTU CONNECTION DETAILS.
10. COPPER TO FIBER MEDIA CONVERTER ON RACK MOUNT SHELF CONNECT CCTV PC FOR CONNECTIVITY OVER SEPTA'S FIBER NETWORK. FINAL FIBER CONNECTION BY SEPTA.
11. COORDINATE FINAL RACK LAYOUT WITH SEPTA C&S.

50% SUBMISSION
NOT FOR CONSTRUCTION

SOUTHEASTERN PENNSYLVANIA TRANSPORTATION AUTHORITY
EM&C DIVISION
1234 MARKET ST, 13TH FL.
PHILADELPHIA, PA 19107

CHIEF ENGINEER - EM&C
CHIEF ENGINEERING OFFICER - B&B
CHIEF RAIL TRANSIT OFFICER
SYSTEM SAFETY
DIRECTOR OF ENGINEERING - B&B
MANAGER - ARCH / ENGINEERING
PROJECT MANAGER

HDR Engineering, Inc.
Philadelphia, PA

ARORA ENGINEERS
65 WILMINGTON WEST CHESTER PIKE
CHADDS FORD, PA 19317
PHONE 610.485.3600
FAX 610.485.3900

REV	DATE	DESCRIPTION	BY	CK'D	APP'D

DATE PRINTED: 10/21/2025

PARK
SUBWAY/ELEVATED TRAINS
TRACTION POWER SUBSTATION REHABILITATION
COMMUNICATIONS
SINGLE LINE DIAGRAM

SCALE: AS SHOWN	SCALE FACTOR: 1:1
DATE: 08/22/2025	DRAWN BY: DC
	CHECKED BY: EH
WORK ORDER NO.: 276482	
SHEET NUMBER: **COM206**	
DWG. NO.: # OF 34	
SHT. NO.: ### OF 453	
ARCHIVE NO.:	
COMPUTER FILE NO.: 17AN-COM206	REV. NO.: ---

STATUS: 50% SUBMISSION

C:\PW\WORKING\PITTID1958905\17AN-COM206.DWG

NOTES:

1. CABINET ARRANGEMENT TO BE FRONT ACCESS ONLY FOR ENCLOSED TIA/EIA 19" RACK.
2. THE CONTRACTOR TO INSTALL NEW CONTROL CABLE FROM AN EXISTING MANHOLE ON WEST CUMBERLAND STREET TO NEW INTERFACE CABINET.
3. THE CONTRACTOR TO TRANSFER OVER FROM EXISTING FIBER TO NEW CONTROL ROOM.
4. REMOVE EXISTING COMMUNICATION CABLES, CONDUITS AND EQUIPMENT ONCE NEW PRODUCTS ARE INSTALLED AND TESTED AS FUNCTIONAL.
5. BOLD ITEMS ON THIS DRAWING ARE NEW.
6. GRAYSCALE ITEMS ON THIS DRAWING TO REMAIN.

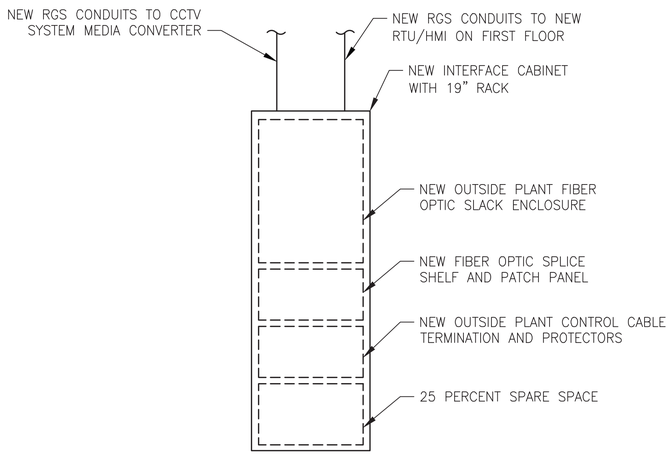

1 COM207 COM/INTERFACE CABINETS DETAIL ELEVATION VIEW
N.T.S

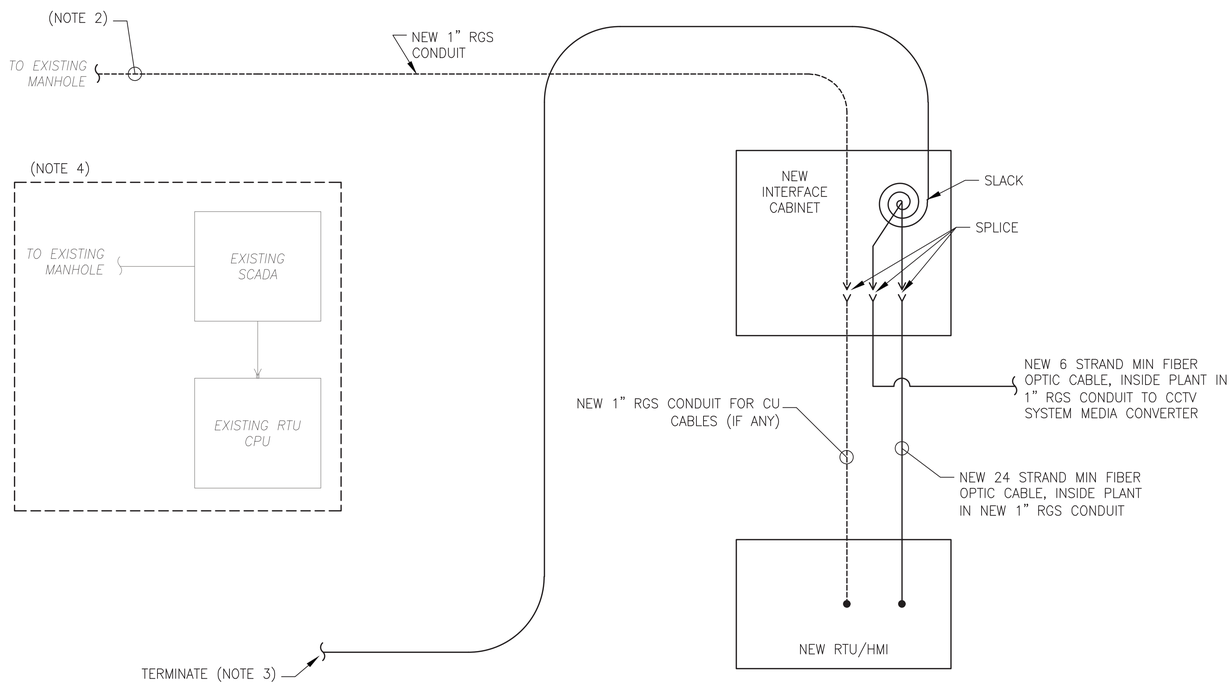

2 COM207 FIBER NODE DIAGRAM
N.T.S.

50% SUBMISSION
NOT FOR CONSTRUCTION

SOUTHEASTERN PENNSYLVANIA TRANSPORTATION AUTHORITY
EM&C DIVISION
1234 MARKET ST, 13TH FL.
PHILADELPHIA, PA 19107

CHIEF ENGINEER - EM&C
CHIEF ENGINEERING OFFICER - B&B
CHIEF RAIL TRANSIT OFFICER
SYSTEM SAFETY
DIRECTOR OF ENGINEERING - B&B
MANAGER - ARCH / ENGINEERING
PROJECT MANAGER

HDR Engineering, Inc.
Philadelphia, PA

REV	DATE	DESCRIPTION	BY	CK'D	APD

DATE PRINTED: 10/21/2025

PARK
SUBWAY/ELEVATED TRAINS
TRACTION POWER SUBSTATION REHABILITATION
COMMUNICATIONS
FIBER NODE DIAGRAM

SCALE: NTS	SCALE FACTOR: -
DATE: 08/22/2025	DRAWN BY: MJB/ARG
	CHECKED BY: EZ
WORK ORDER NO.: 276482	
SHEET NUMBER: **COM207**	
DWG. NO.: # OF 34	
SHT. NO.: ### OF 453	
ARCHIVE NO.:	
COMPUTER FILE NO.: 17AN-COM207	REV. NO.: -

STATUS: 50% SUBMISSION

C:\PW\WORKING\PITTD\195890\517AN-COM207.DWG