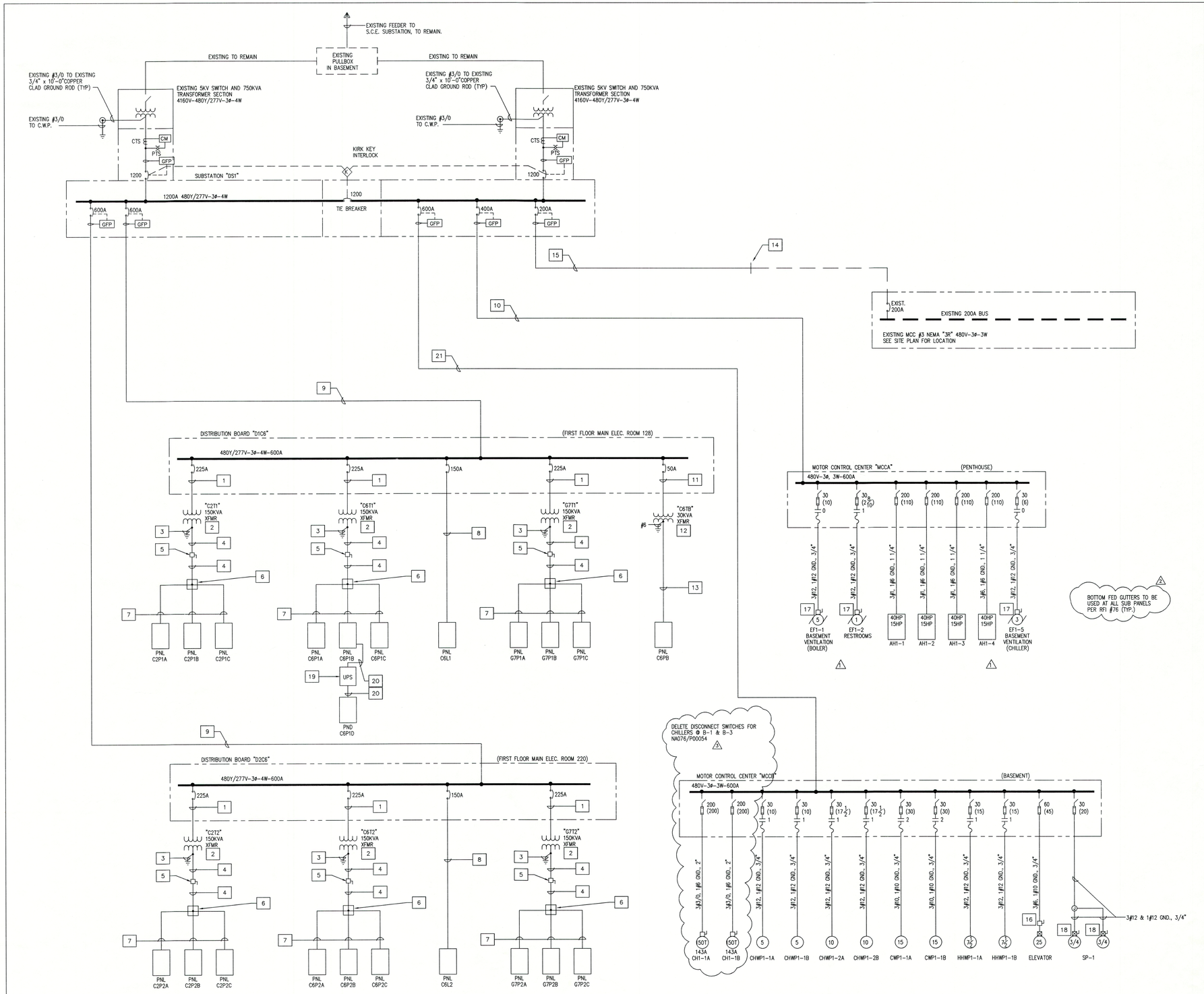

SINGLE LINE DIAGRAM (BUILDING B-1)

E101 1 E101 SCALE: N.T.S.

PLAN NOTES:

1. 3#4/0 & 1#4 GND. – 2"
2. K-13 RATED TRANSFORMER 480V-208/120V-3ø-4W
3. 1#2/0 GND. – 3/4"
4. (2) SETS 5#400 KCMIL & 1#2/0 GND. – 3 1/2" EA.
5. 600A-3P FUSED DISCONNECT SWITCH WITH 500A FUSES
6. 24"x24"x8" JUNCTION BOX
7. 5#4/0 & 1#6 GND. – 2 1/2"
8. 4#3/0 & 1#6 GND. – 2"
9. (2) SETS 4#350 KCMIL & 1#1 GND. – 3" EA.
10. 3#600 KCMIL & 1#3 GND. – 3"
11. 3#6 & 1#10 GND. – 3/4"
12. STANDARD DRY TYPE TRANSFORMER 480V-208/120V-3ø-4W
13. 4#1 & 1#6 GND. – 1 1/2"
14. INTERCEPT EXISTING FEEDER WHERE IT ENTERS THE BUILDING AND EXTEND TO NEW SUBSTATION AS SHOWN.
15. 3#3/0 & 1#6 GND. – 3"
16. 60A-3P HORSEPOWER RATED FUSED DISCONNECT SWITCH WITH FUSES PER EQUIPMENT RECOMMENDATIONS.
17. 30A-3P HORSEPOWER RATED NON-FUSED DISCONNECT SWITCH.
18. COMBINATION 30A-3P FUSED DISCONNECT SWITCH AND SIZE "00" STARTER, NEMA 12 ENCLOSURE. FUSES PER EQUIPMENT RECOMMENDATIONS.
19. 5000 VA UPS, CONTRACTOR SHALL VERIFY SIZE FOR SECURITY EQUIPMENT LOADS ON PANEL "C6P1D".
20. 2#10 & 1#10 GND. 3/4"
21. (2) SETS 3#350 KCMIL & 1#1 GND. – 2 1/2"EA.

IF SHEET IS LESS THAN 36" x 48" IT IS A REDUCED PRINT – SCALE ACCORDINGLY

REVISION	DATE	DESCRIPTION	BY	BY
3	7/01/03	AS BUILT		
2	1/28/00	NA076/P00054		
1	7/28/99	RFI #76		
0	6/12/98	CLIENT COMMENTS	K.L.	M.M.

FACILITIES, INC.: 475 ANTON BOULEVARD SUITE 300 COSTA MESA, CA. 92626 (714) 549-8200 FAX (714) 549-0600

DEPARTMENT OF THE ARMY
SACRAMENTO DISTRICT, CORPS OF ENGINEERS
SACRAMENTO, CALIFORNIA

San Bernardino California

Defense Finance and Accounting Service (DFAS)

SINGLE LINE DIAGRAM (BUILDING B-1)

DESIGNED: K.E.L.
DRAWN: M.J.M.
CHECKED: K.F.S.
SUBMITTED: 8 APRIL 1998
DATE APPROVED: –
SCALE: SEE DRAWING
SPEC. No.: 9867
SHEET: E101 1459130
FILE No.: 231-25-279

APPROVAL RECOMMENDED:
CHIEF, DESIGN BRANCH

APPROVAL RECOMMENDED:
CHIEF, SAFETY OFFICE

DGN\BSPECS\$$$

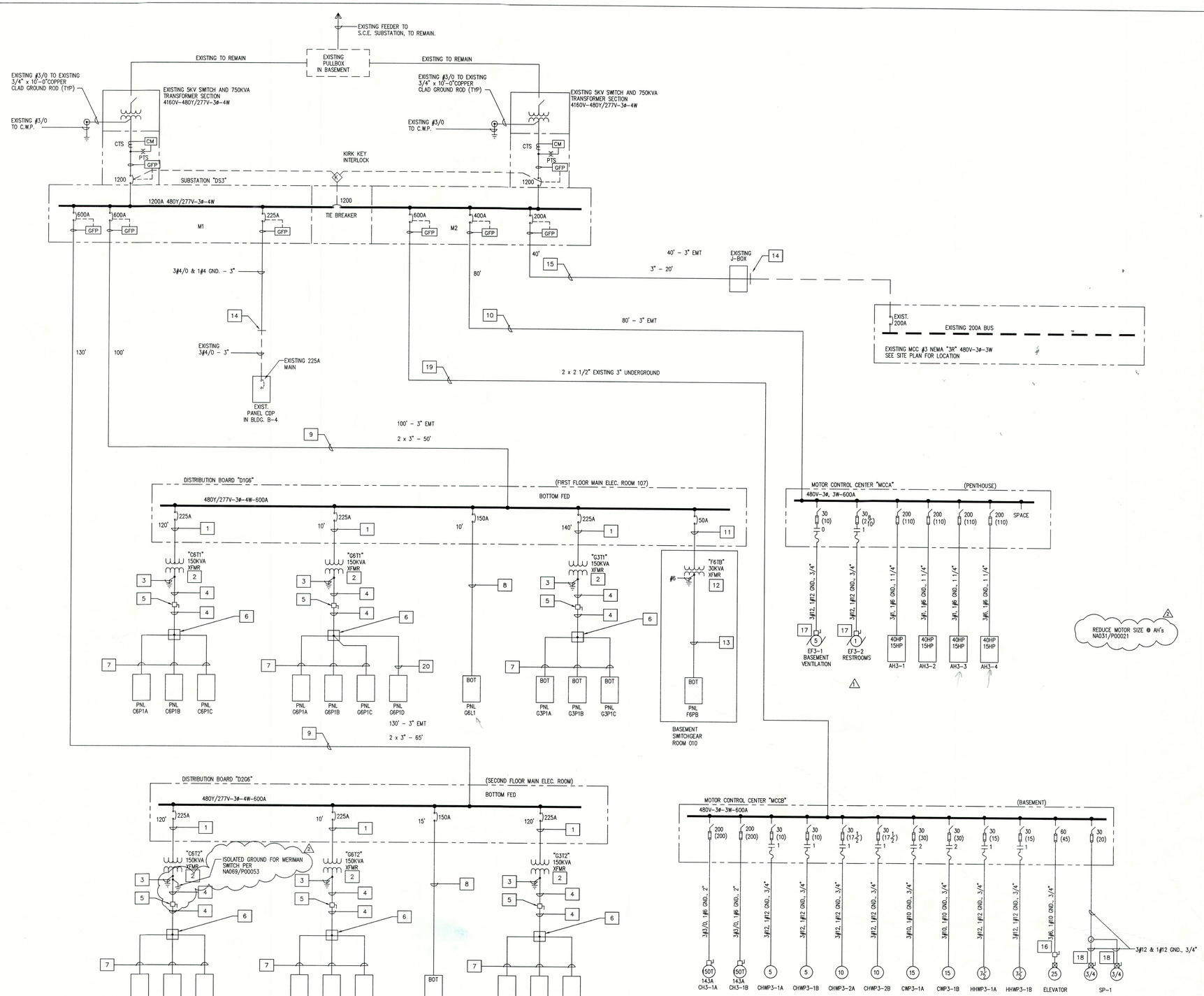

1 E101 SINGLE LINE DIAGRAM (BUILDING B-3)

E101 SCALE: N.T.S.

PLAN NOTES:

1. 3#4/0 & 1#4 GND. - 2"
2. K-13 RATED TRANSFORMER 480V-208/120V-3ø-4W
3. 1#2/0 GND. - 3/4"
4. (2) SETS 5#400 KCMIL & 1#2/0 GND. - 3 1/2" EA.
5. 600A-3P FUSED DISCONNECT SWITCH WITH 500A FUSES
6. 24"x24"x8" JUNCTION BOX
7. 5#4/0 & 1#6 GND. - 2 1/2"
8. 4#3/0 & 1#6 GND. - 2"
9. (2) SETS 4#350 KCMIL & 1#1 GND. - 3" EA.
10. 3#600 KCMIL & 1#3 GND. - 3"
11. 3#6 & 1#10 GND. - 3/4"
12. STANDARD DRY TYPE TRANSFORMER 480V-208/120V-3ø-4W
13. 4#1 & 1#6 GND. - 1 1/2"
14. INTERCEPT EXISTING FEEDER WHERE IT ENTERS BUILDING AND EXTEND TO NEW SUBSTATION AS SHOWN.
15. 3#3/0 & 1#6 GND. - 3"
16. 60A-3P HORSEPOWER RATED FUSED DISCONNECT SWITCH WITH FUSES PER EQUIPMENT RECOMMENDATIONS.
17. 30A-3P HORSEPOWER RATED NON FUSED DISCONNECT SWITCH.
18. COMBINATION 30A-3P FUSED DISCONNECT SWITCH AND SIZE "00" STARTER, NEMA 12 ENCLOSURE. FUSES PER EQUIPMENT RECOMMENDATIONS.
19. (2) SETS 3#350 KCMIL & 1#1 GND, 2 1/2" EA
20. 5#2/0 & 1#6 GND, 2"

IF SHEET IS LESS THAN 36" x 48" IT IS A REDUCED PRINT - SCALE ACCORDINGLY

REVISION	DATE	DESCRIPTION	BY	BY
3	7/01/03	AS BUILT		
2	1/18/00	NA069/P00053		
2	7/28/99	NA031/P00021		
1	6/12/98	CLIENT COMMENTS	K.L.	M.M.

FACILITIES, INC.
615 ARROW BOULEVARD SUITE 100 COSTA MESA, CA. 92626 (714) 979-0900 FAX 714 979-0600

DEPARTMENT OF THE ARMY
SACRAMENTO DISTRICT, CORPS OF ENGINEERS
SACRAMENTO, CALIFORNIA

San Bernardino — California

Defense Finance and Accounting Service (DFAS)

SINGLE LINE DIAGRAM (BUILDING B-3)

DESIGNED: K.E.L.
DRAWN: M.J.M.
CHECKED: K.F.S.

APPROVAL RECOMMENDED: CHIEF, ELECTRICAL BRANCH

APPROVAL RECOMMENDED: CHIEF, SAFETY OFFICE

SUBMITTED: 8 APRIL 1998
DATE APPROVED: –

SCALE	SIZE DRAWING	SPEC. No. 9997
SHEET E102	FILE No. 231-25-279	

14FWT96

DOC:$SPEC$$$

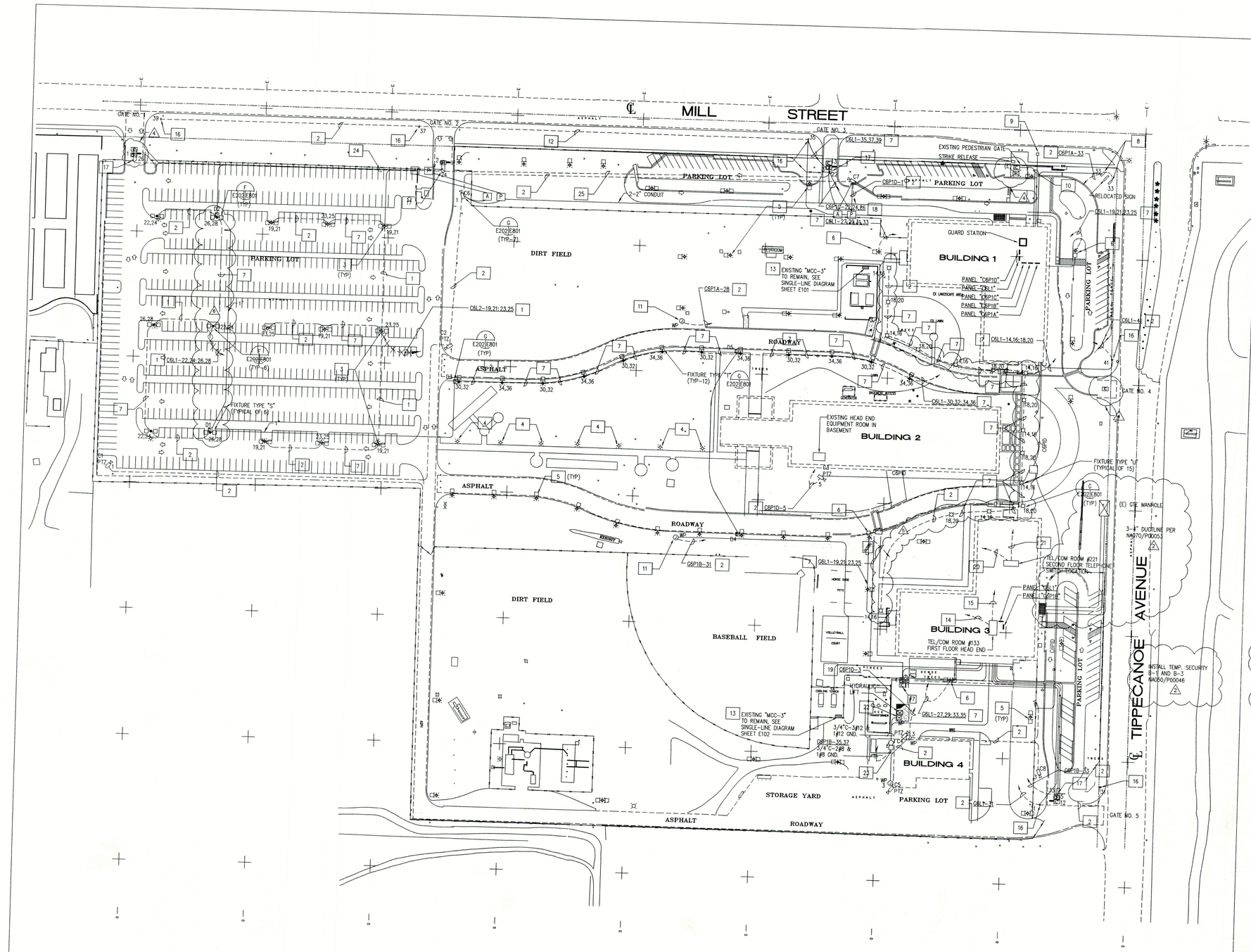

GENERAL NOTES:

A. REFER TO RISER DIAGRAMS FOR CCTV, INTERCOM, ACCESS CONTROL AND SECURITY CONDUIT INTERCONNECTION REQUIREMENTS.

B. PROVIDE ALL TRENCHING, BACKFILL AND PATCHING REQUIRED FOR ALL UNDERGROUND CONDUITS. COORDINATE WITH SHEET C100.

PLAN NOTES:

1. 1"C-4#8 & 1#8 GND.
2. 3/4"C-2#10 & 1#10 GND.
3. EXISTING 400W H.P.S. PARKING LOT LIGHT POLE TO REMAIN.
4. EXISTING FLUORESCENT WALKWAY LIGHT POLE TO REMAIN.
5. EXISTING 250W H.P.S. PARKING LIGHT POLE TO REMAIN.
6. INTERCEPT EXISTING CIRCUITING AND ROUTE TO NEW PANEL AS INDICATING.
7. 3/4"C-4#10 & 1#10 GND.
8. GRADE MOUNTED SIGN LIGHT FIXTURE, TYPE "V"
9. PROVIDE 24"x30" PULL BOX WITH "CATV" LOGO ON COVER.
10. PROVIDE 2"C.O. BACK TO BUILDING 1 TEL/COMM ROOM #129. SEE SHEET E601.
11. PROVIDE CONNECTION TO IRRIGATION CONTROLLER. VERIFY EXACT LOCATION PRIOR TO ROUGH-IN.
12. 3/4"C-3#10 & 1#10 GND.
13. FIELD VERIFY EXACT LOCATION.
14. PROVIDE (1) 4" CONDUIT TO EXISTING HEAD END EQUIPMENT ROOM IN BUILDING 2 BASEMENT. SEE SHEET E103 FOR LOCATION AND QUANTITY OF OPTICAL FIBER.
15. PROVIDE (2) 4" CONDUITS TO BUILDING 1. SEE SHEET E103 FOR LOCATIONS AND QUANTITY OF OPTICAL FIBER.
16. PROVIDE CONNECTION TO MONUMENT SIGN.
17. PROVIDE CONNECTION TO AUTOMATIC GATE CONTROL ASSEMBLY, VERIFY EXACT REQUIREMENTS PRIOR TO ROUGH-IN.
18. 1 1/4"C-4#4 & 1#4 GND.
19. 3/4"C-2#8 & 1#8 GND.
20. PROVIDE (1) 4" CONDUIT WITH TELEPHONE SERVICE CABLE TO EXISTING TELEPHONE SWITCH LOCATION IN BUILDING 2 BASEMENT AND CONNECT AS REQUIRED.
21. PROVIDE (2) 4" CONDUITS WITH TELEPHONE CABLE TO BUILDING 1, SEE SHEET E103 FOR LOCATION AND CABLE QUANTITIES.
22. PROVIDE CONNECTION TO HYDRAULIC LIFT CONTROL STATION. VERIFY EXACT LOCATION AND REQUIREMENTS PRIOR TO ROUGH-IN.
23. PROVIDE 250V-2P-60A NEMA 3R FUSED DISCONNECT SWITCH AND CONNECTION TO HYDRAULIC PUMP MOTOR ASSEMBLY. VERIFY EXACT LOCATION AND REQUIREMENTS PRIOR TO ROUGH-IN.
24. 1"C-2#4 & 1#4 GND.
25. 1"C-3#4 & 1#4 GND.

△2 PROCURE SECURITY SYSTEM B-1 AND B-3 NA013/P00042

△3 REVISE ENTRY SYSTEM AT GATES #1, 2, 3, 4 AND 5 NA049/R00069

IF SHEET IS LESS THAN 36" x 48" IT IS A REDUCED PRINT – SCALE ACCORDINGLY

REVISION	DATE	DESCRIPTION	BY	BY
△6	7/01/03	AS BUILT		
△5		DELETE INSTALLATION OF NEW LIGHTING		
△4		DELETE INSTALLATION OF NEW LIGHTING		
△3	9/24/01	NA160/R00026		
△2	1/09/01	NA049/R00069		
△1	5/18/00	NA070/P00055, NA050/P00046, NA013/P00042		

FACILITIES, INC.
875 AVION BOULEVARD
SUITE 100
FORT WORTH, TX 76135
714 340-0200
FAX 714 340-0600

DEPARTMENT OF THE ARMY
SACRAMENTO DISTRICT, CORPS OF ENGINEERS
SACRAMENTO, CALIFORNIA

DESIGNED: K.E.L.
DRAWN: M.J.M.
CHECKED: K.F.S.
SUBMITTED:

San Bernardino California

Defense Finance and Accounting Service (DFAS)

SITE PLAN ELECTRICAL

8 APRIL 1998

DATE APPROVED

TOTAL SHEETS | SIZE DRAWING | SPEC. No. | SHEET | FILE No.
E202 | 231-25-279

APPROVAL RECOMMENDED:
CHIEF, DESIGN BRANCH

APPROVAL RECOMMENDED:
CHIEF, SAFETY OFFICE

SITE PLAN – ELECTRICAL
1 E202 E202

DOCUMENT SPECIFICATION DATE/TIME/PAGE

ALSO SEE LOW VOLTAGE SHOP DRAWINGS & SQUARE D O&M MANUAL

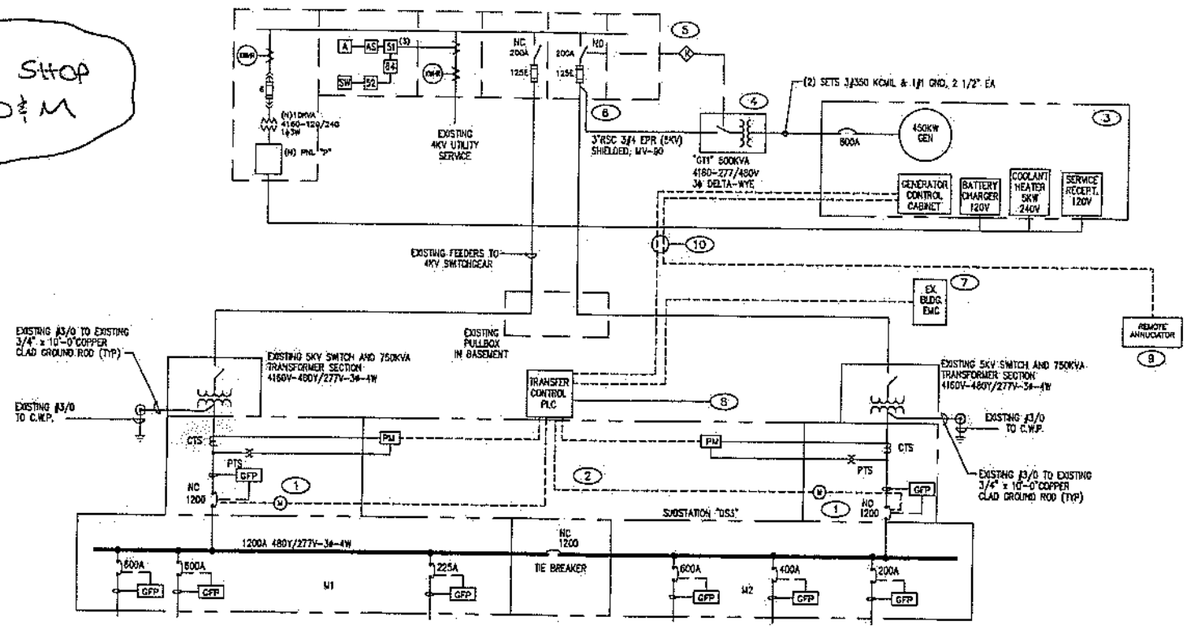

NEW SINGLE LINE DIAGRAM

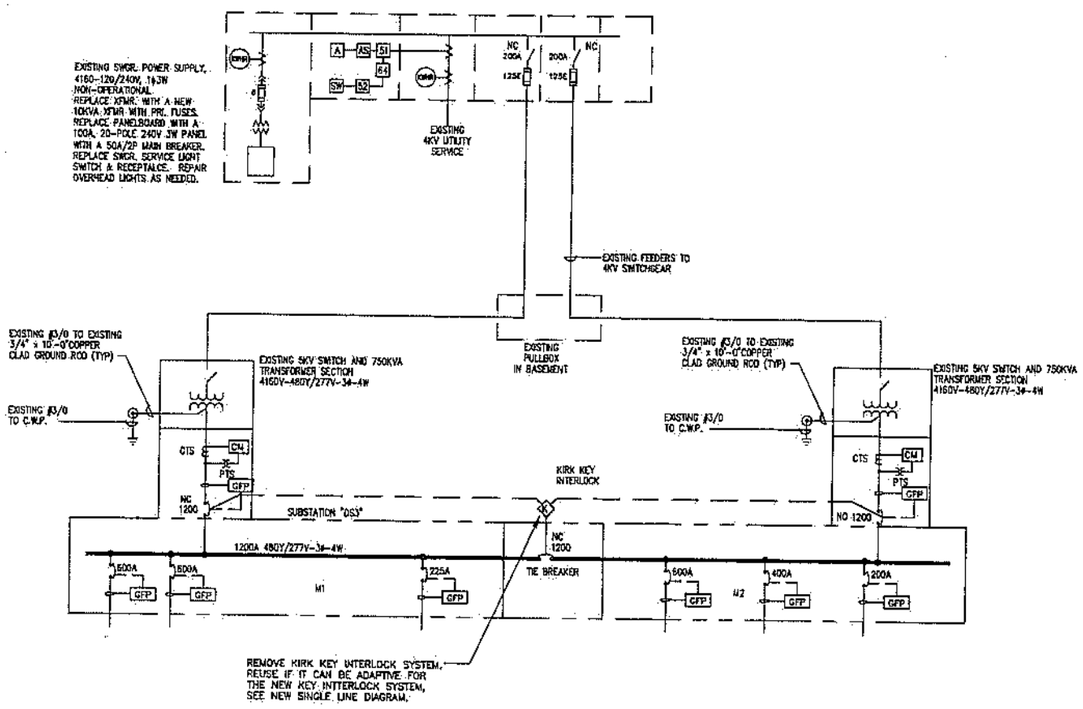

EXISTING SINGLE LINE DIAGRAM

REFERENCED NOTES:

1. NEW MOTOR OPERATORS INSTALLED EXISTING SQ-D CIRCUIT BREAKERS
2. NEW PLC (PROGRAMMABLE LOGIC CONTROLLER) BY SQ-D TO CONTROL THE MOTOR OPERATORS. PROVIDE OUTPUT TO THE BUILDING'S EMC (ENERGY MANAGEMENT SYSTEM). GENERATOR START/STOP CONTROL & INPUTS FROM THE POWER MONITORS. MOP:
   1. LOSS OF NORMAL UTILITY POWER, WAIT 3 SEC. BEFORE SENDING "START GENERATOR" SIGNAL.
   2. IF NORMAL POWER RETURNS, RESET TIME-DELAY TIMER
   3. AFTER 3 SEC., SEND START SIGNAL TO GENERATOR CONTROLLER. CHECK WITH GENERATOR CONTROL FOR TD AT GENERATOR OR AT THE PLC.
   4. WHEN PROPER VOLTAGE IS SENSED ON THE GENERATOR SIDE OF THE MAIN CIRCUIT BREAKER (C.B.), OPEN UTILITY SIDE C.B. FOLLOWED WITH CLOSURE OF THE GENERATOR C.B. ELECTRICALLY INTERLOCK THE TWO MAIN C.B. SO THAT NEITHER ONE CAN CLOSE TOGETHER.
   5. SEND SIGNAL TO EMC TO NOTIFY THAT BUILDING IS ON GENERATOR POWER
   6. WHEN NORMAL POWER IS RETURNED, DELAY TRANSFER FOR 120 SEC. IF NORMAL POWER IS LOST, RESET TIMER.
   7. AFTER 120 SEC, OPEN GENERATOR C.B., THEN CLOSE UTILITY C.B. SEND "STOP" SIGNAL TO GENERATOR CONTROLLER. GENERATOR CONTROLLER TO CONTROL THE COOLDOWN.
   8. PROVIDE MEANS TO MANUALLY TRANSFER TO GENERATOR POWER.
3. NEW GENERATOR, OWNER PROVIDED, CONTRACTOR INSTALLED.
4. NEW PAD-MOUNTED 3-PHASE COMPARTMENTAL TYPE DISTRIBUTION TRANSFORMER
5. NEW KIRK KEY SYSTEM: THE XFRM. LOAD BREAK SWITCH TO BE LOCKED IN THE CLOSED POSITION WITH KIRK KEY. KEY RELEASED AFTER THE SWITCH IS IN OPEN POSITION & CANNOT BE CLOSED UNLESS KEY IS USED. FIT THE 4KV FEEDER SWITCH WITH A KIRK KEY UNIT TO LOCK IT IN THE OPEN POSITION. CAN ONLY BE CLOSED WITH THE USE OF THE KEY. KEY IS RELEASED IN THE OPEN POSITION.
6. NEW 5KV CABLES TERMINATED ON THE LOAD SIDE OF THE SWITCH ALONG WITH THE EXISTING FEEDER CABLES.
7. EXISTING ENERGY MANAGEMENT SYSTEM TO BE MODIFIED TO RESTART HVAC SYSTEM UNDER A CONTROLLED SEQUENCE WHILE OPERATING ON GENERATOR POWER. EACH LOAD TO BE STEPPED LOADED ON THE SYSTEM. THE 4 AHU'S ARE TO BE PRIORITIZED. IF GENERATOR CURRENT REACHES 650 AMPS, LOWEST PRIORITY AHU IS TO BE TURNED OFF, THEN THE NEXT UNTIL LOAD AMPS ARE BELOW THE 550 AMPS.
8. NEW 120V CKT: 1/2"C 2#12 FROM PANEL "F6PB" SPARE CKT. #8 LOCATED ON THE SOUTH WALL OF THE SWBD. ELECTRIC ROOM.
9. REMOTE ANNUNCIATOR, LOCATE IN 1ST FLR. CORRIDOR 108, NEXT TO FIRE ALARM ANNUNCIATOR.
10. CONTROL CABLE FROM THE PLC TO GENERATOR CONTROL PANEL, 12 18AWG CONDUCTORS, UNSHIELDED W/OVERALL PVC JACKET; WEST PENN 283 OR EQUAL. REMONTE ANNUN. CABLE, 4PR 24AWG UNSHIELDED CAT 5E CABLE: WEST PENN 254245 OR EQUAL.

PANEL "P" 120/240 VOLT, 1 PHASE, 3 WIRE MAIN 50

LOCATION SWGR MOUNTING FLUSH BUS RATING 100

CCT No.	VA LOAD LINE A	VA LOAD LINE B	LOAD DESCRIPTION	OUTLETS	CIRCUIT BREAKER	BUS	CIRCUIT BREAKER	OUTLETS	LOAD DESCRIPTION	VA LOAD LINE A	VA LOAD LINE B	CCT No.
1			MAIN		50		20		GENERATOR COOLANT HEATER	2500		2
3					2		2				2500	4
5	150		SWGR. CONTROL POWER		1 20		20 1		GENERATOR CHARGER	300		6
7		500	SWGR. LIGHTS						GENERATOR RECEPTACLE		800	8
9	800		SWGR. RECEPTACLE									10
11		280	SWGR. SITE LIGHTS									12
13												14
15												16
17												18
19												20
21												22
23												24
25												26
27												28
29												30
31												32
33												34
35												36
37												38
39												40
41												42
	950	880	SUB TOTALS									

NOTES:

	LINE A	LINE B
LINE TOTALS	2800	3300
LCL ADDER	625	845
TOTAL VA/ϕ	4375	5025
LINE AMPS	36	42

PacifiCurrent
Electrical Engineering
3821 Glenwood Ave.
La Crescenta, CA 91214
(818)541-9809

REGISTERED PROFESSIONAL ENGINEER RAYMOND W. LAMB E11732 EXP 9/30/08 ELECTRICAL STATE OF CALIFORNIA

U.S. FOREST SERVICE
PACIFIC SOUTHWEST REGION R5

NO.	DATE	REVISIONS

FOREST: SAN BERNADINO NATIONAL FOREST
PROJECT NAME: STANDBY GENERATOR INSTALLATION
DRAWING NAME: SITE PLAN & DETAILS

San Bernardino National Forest

PROJECT NUMBER -
DESIGNED BY RWL
DRAWN BY RWL
CHECKED BY -
CHECKED BY -
DATE 12/14/07
SCALE AS NOTED
DRAWING E2
SHEET OF 3

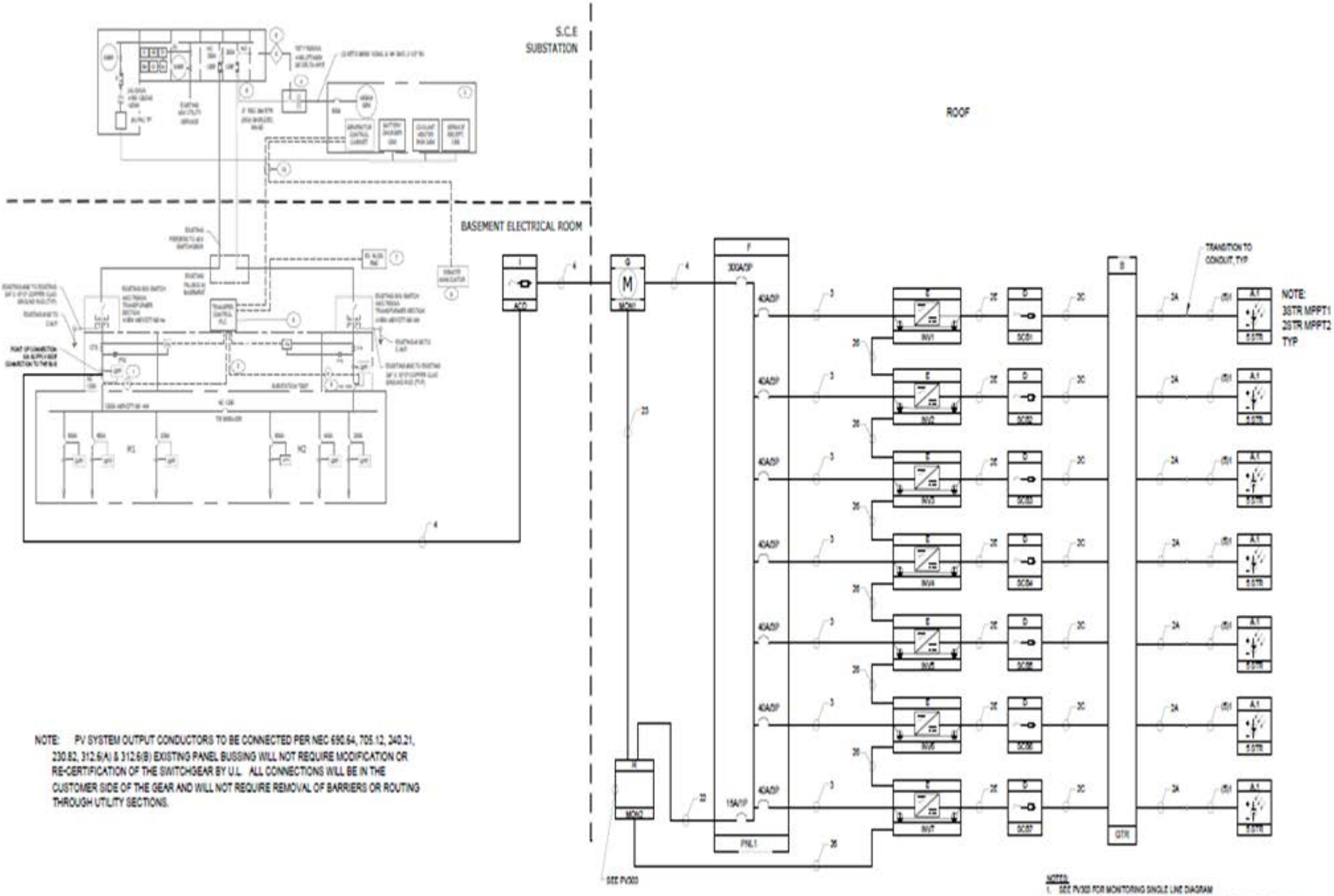

NOTE: PV SYSTEM OUTPUT CONDUCTORS TO BE CONNECTED PER NEC 690.64, 705.12, 240.21, 230.82, 312.6(A) & 312.6(B) EXISTING PANEL BUSSING WILL NOT REQUIRE MODIFICATION OR RE-CERTIFICATION OF THE SWITCHGEAR BY U.L. ALL CONNECTIONS WILL BE IN THE CUSTOMER SIDE OF THE GEAR AND WILL NOT REQUIRE REMOVAL OF BARRIERS OR ROUTING THROUGH UTILITY SECTIONS.

NOTES:
1. SEE PV003 FOR MONITORING SINGLE LINE DIAGRAM
2. ALL CONDUITS TO BE BONDED AS TO NOT INTERFERE WITH EXISTING RF SIGNAL
3. COMBINERS, INVERTERS, PANELBOARD & AC DISCONNECT TO HAVE TEST LOOPS

AGE SHOP
D O&M

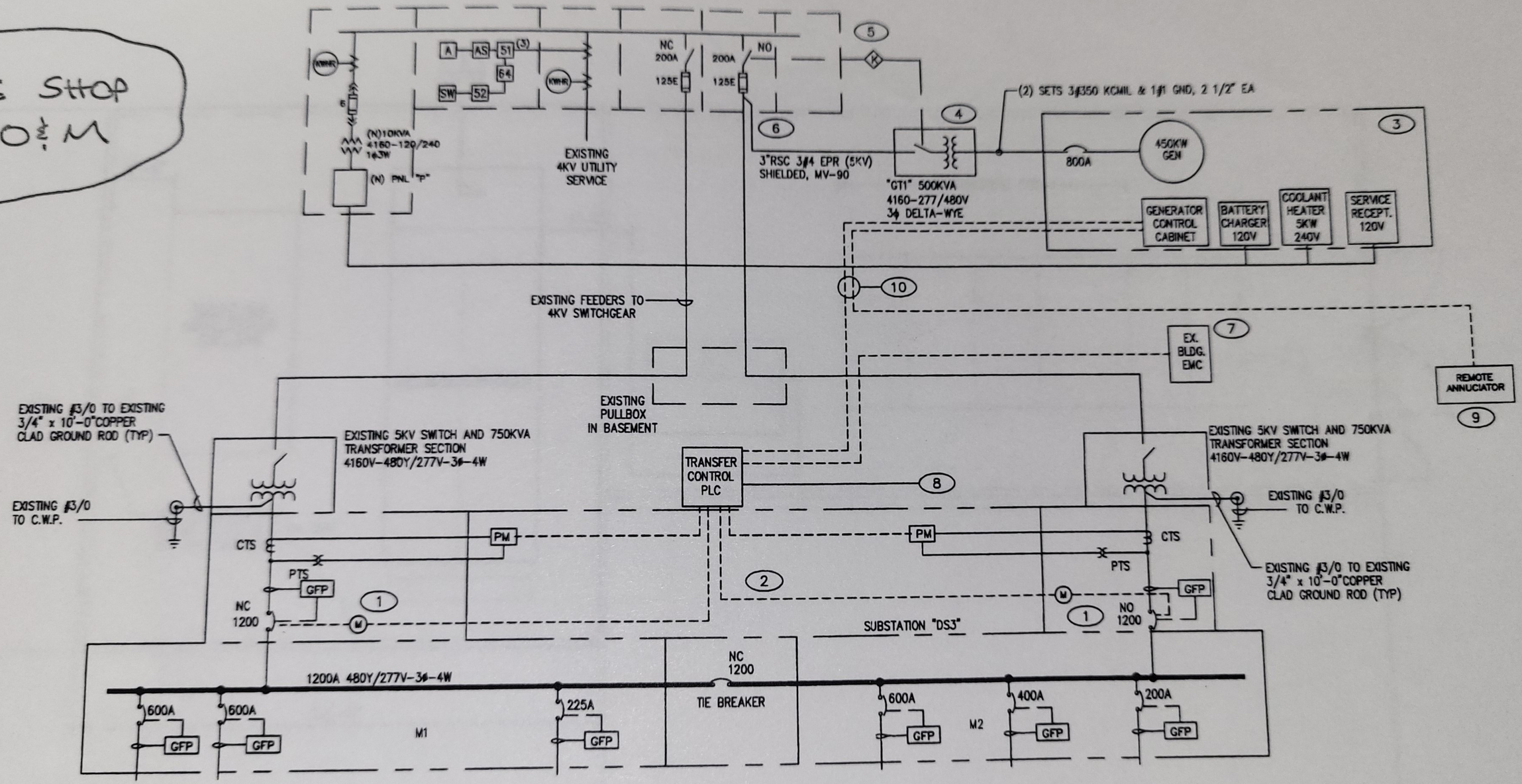
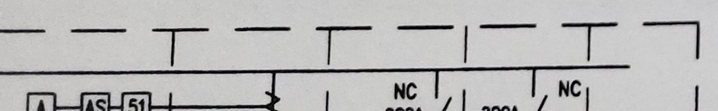
NEW SINGLE LINE DIAGRAM