UNITED STATES DEPARTMENT OF THE INTERIOR

BUREAU OF LAND MANAGEMENT

GAOA MILNER PICNIC CABANA REPLACEMENT

TWIN FALLS DISTRICT

THIS IS TO REPLACE TWO EXISTING PAVILIONS
AT THE MILNER RECREATION SITE.
APPROXIMATELY 11 MILES WEST OF BURLEY, ID.
42°31'33.16"N
113°59'36.30"W

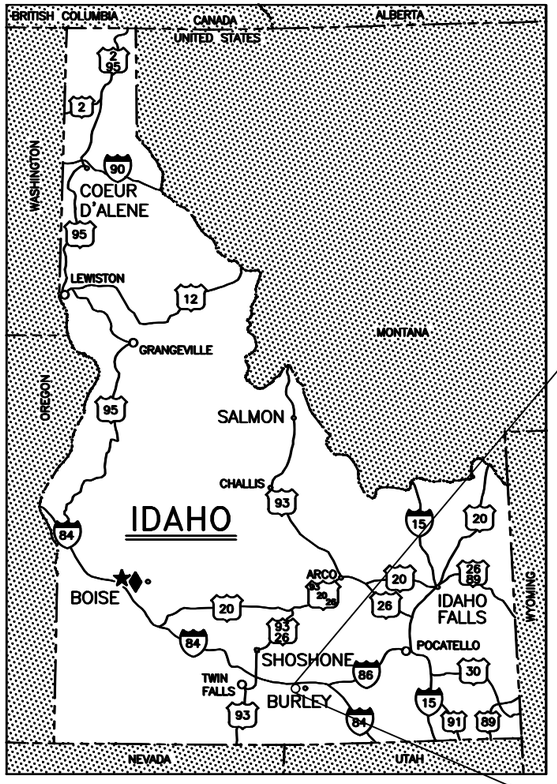

AREA REFERENCE MAP

SYMBOL	DESCRIPTION	SYMBOL	DESCRIPTION
90	INTERSTATE HIGHWAY	★	STATE CAPITOL
93	U.S. HIGHWAY	♦	BLM STATE OFFICE
66	STATE HIGHWAY	●	BLM DISTRICT OFFICE

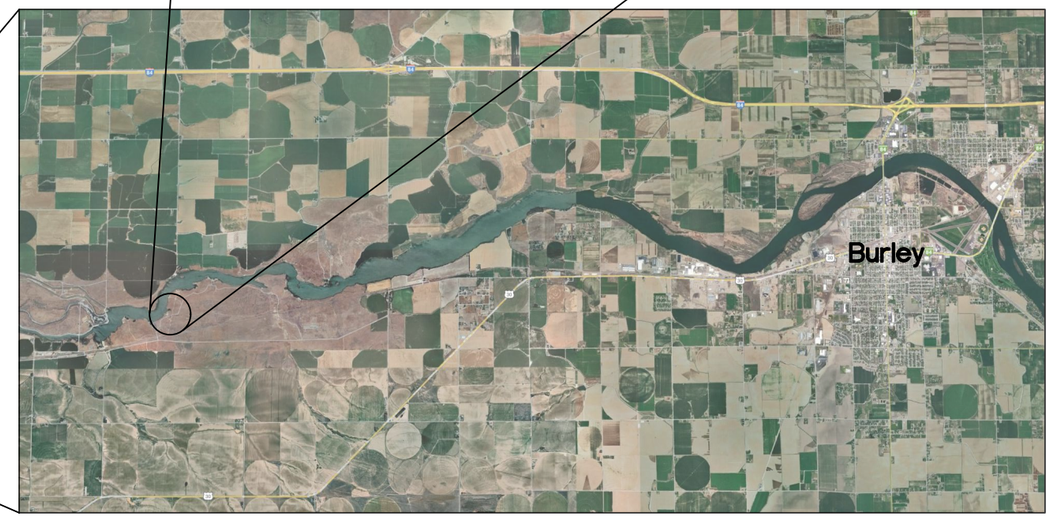

AREA MAP

NOT TO SCALE

N

DRAWING INDEX

SHEET NO.	DESCRIPTION
1	COVER SHEET
2	DEMOLITION SITE MAP
3	SLOPE AND ELEVATION SITE MAP
4	17X17 CONCRETE PAD
5	SQUARE PAVILION STRUCTURE 1
6	SQUARE PAVILION STRUCTURE 2
7	SQUARE PAVILION STRUCTURE 3
8	17X33 CONCRETE PAD
9	RECTANGULAR PAVILION STRUCTURE 4
10	RECTANGULAR PAVILION STRUCTURE 5

UNITED STATES DEPARTMENT OF THE INTERIOR
BUREAU OF LAND MANAGEMENT

COVER SHEET

GAOA MILNER PICNIC SITE CABANA REPLACEMENT

TWIN FALLS DISTRICT IDAHO

MARK	DESCRIPTION	DATE	APPROVED

PROJECT NO: ----
DESIGN OFFICE: BURLEY
DESIGNED BY: ----
DRAWN BY: ----
CHK'D BY: ----
APPROVED BY: ----
DATE: JUNE 2025

G001

SHEET 1 OF 10

NOT TO SCALE (NTS)

CONTROL POINTS

Point #	Elevation	Northing	Easting	Description
1	4170.58	15461058.05	2450563.87	CONTROL POINT
2	4166.70	15461279.23	2450772.09	CONTROL POINT

NOTE:

REMOVE THE TWO EXISTING SHADE SHELTERS AND THEIR ASSOCIATED FOUNDATIONS.

MINIMIZE DAMAGE TO EXISTING VEGETATION.

CALL BEFORE YOU DIG. CALL 811.

NATIONAL SYSTEM OF PUBLIC LANDS
U.S. DEPARTMENT OF THE INTERIOR
BUREAU OF LAND MANAGEMENT

UNITED STATES DEPARTMENT OF THE INTERIOR
BUREAU OF LAND MANAGEMENT

DEMOLITION SITE MAP

GAOA MILNER PICNIC SITE CABANA REPLACEMENT

TWIN FALLS DISTRICT IDAHO

MARK	DESCRIPTION	DATE	APPROVED

PROJECT NO: ----
DESIGN OFFICE: BURLEY
DESIGNED BY: ----
DRAWN BY: ----
CHK'D BY: ----
APPROVED BY: ----
DATE: JUNE 2025

G002

SHEET 2 OF 10

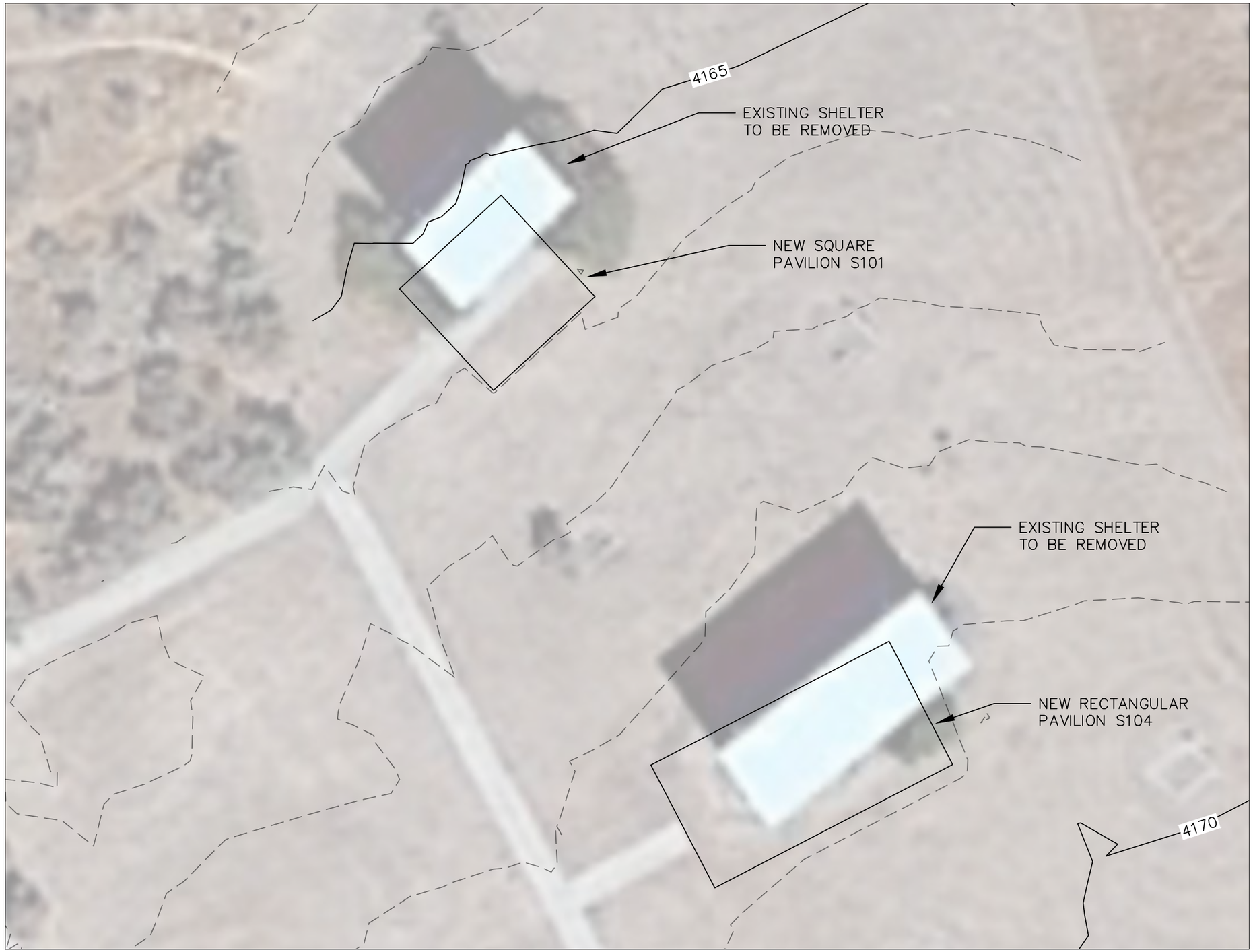

FINAL GRADING NTS

UNITED STATES DEPARTMENT OF THE INTERIOR
BUREAU OF LAND MANAGEMENT

SLOPE AND ELEVATION SITE MAP

GAOA MILNER PICNIC SITE CABANA REPLACEMENT

TWIN FALLS DISTRICT IDAHO

MARK	DESCRIPTION	DATE	APPROVED

PROJECT NO: ----
DESIGN OFFICE: BURLEY
DESIGNED BY: ----
DRAWN BY: ----
CHK'D BY: ----
APPROVED BY: ----
DATE: JUNE 2025

G003

SHEET 3 OF 10

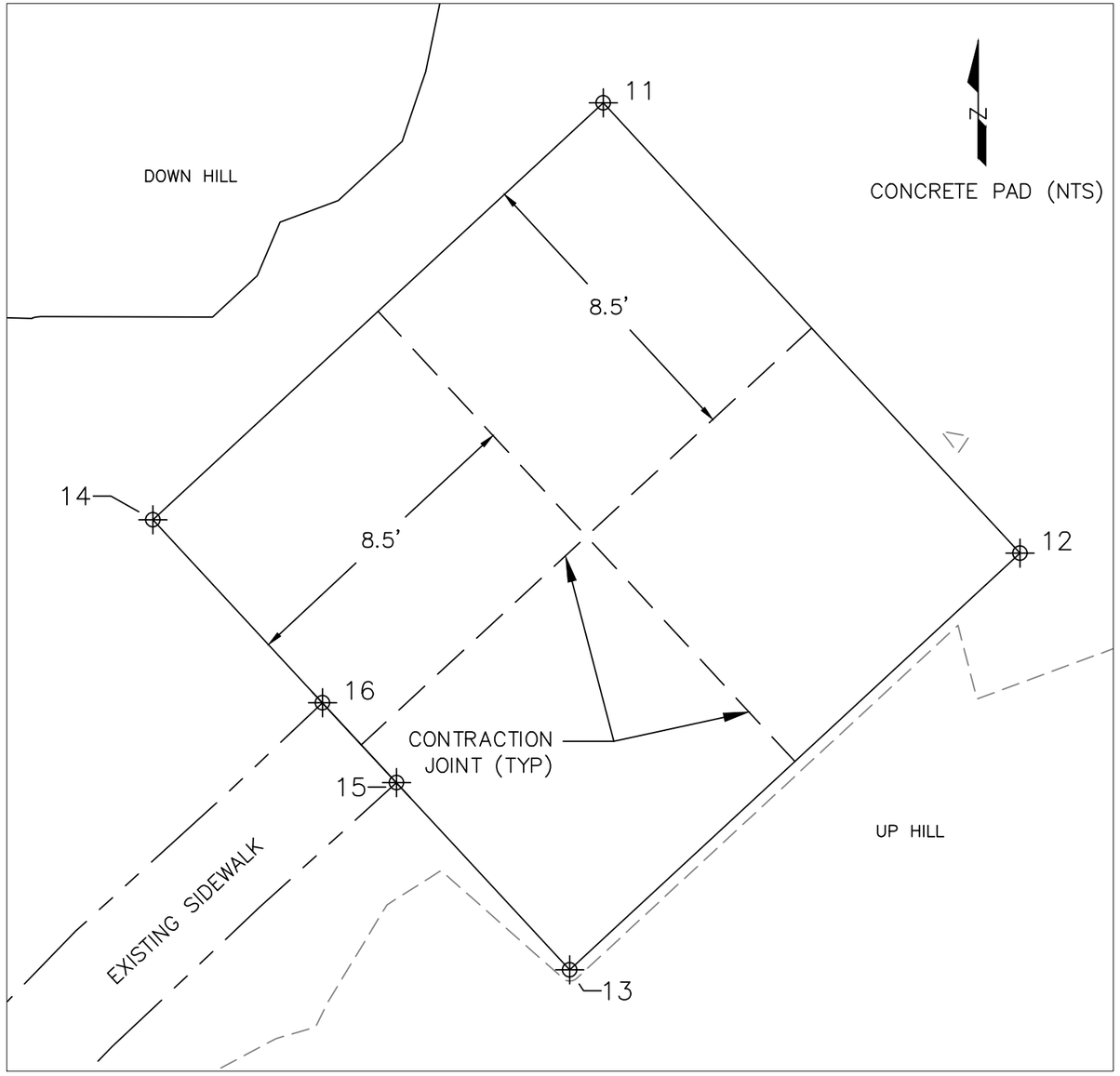

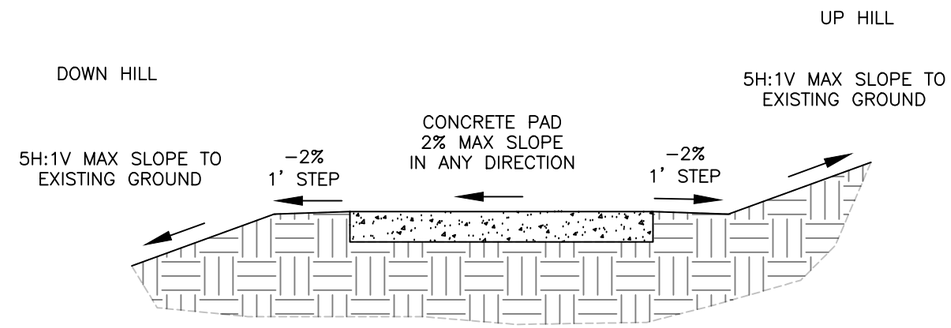

SIDE SLOPE DETAILS (NTS)

NOTE:

17x17 CONCRETE PAD FOR A 16x16 PAVILION.

THE CONCRETE PAD IS TO BE 6" THICK.

DEMOLISH EXISTING STRUCTURE.

EXISTING SIDEWALK WILL BE CUT AND REMOVED TO WHERE THE NEW PAD WILL SIT.

THE NEW PAVILION WILL MATCH ELEVATION OF EXISTING SIDEWALK.

ACCESS AREAS, INCLUDING CONCRETE PAD, SHALL NOT EXCEED 2% SLOPE IN ANY DIRECTION.

ENSURE SLOPE, MAXIMUM TRANSITION HEIGHTS, SURFACES, ETC. MEET ARCHITECTURAL BARRIERS ACT REQUIREMENTS (36 CFR PART 1191)

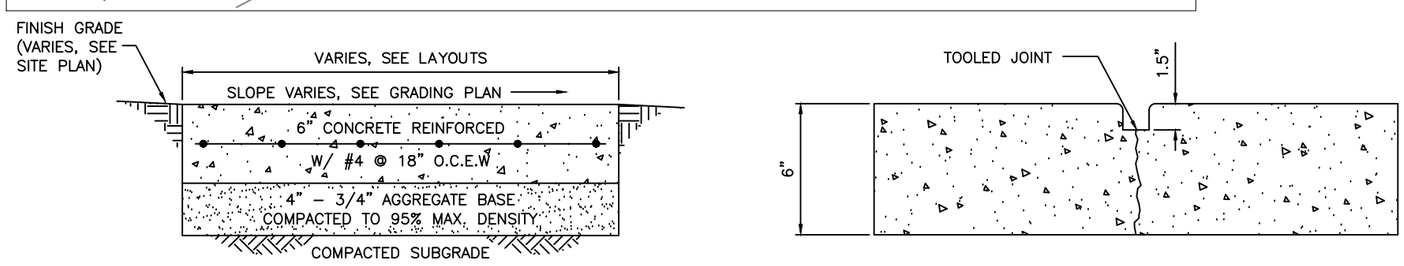

CONCRETE DETAILS (NTS)

CONCRETE				
Point #	Elevation	Northing	Easting	Description
11	4165.63	15461285.34	2450678.95	Concrete
12	4165.94	15461272.87	2450690.50	Concrete
13	4165.94	15461261.32	2450678.03	Concrete
14	4165.63	15461273.79	2450666.48	Concrete
15	4165.80	15461266.51	2450673.22	SIDEWALK
16	4165.74	15461268.72	2450671.18	SIDEWALK

NATIONAL SYSTEM OF PUBLIC LANDS
U.S. DEPARTMENT OF THE INTERIOR
BUREAU OF LAND MANAGEMENT

UNITED STATES DEPARTMENT OF THE INTERIOR
BUREAU OF LAND MANAGEMENT

17X17 CONCRETE PAD

GAOA MILNER PICNIC SITE CABANA REPLACEMENT

TWIN FALLS DISTRICT IDAHO

MARK	DESCRIPTION	DATE	APPROVED

PROJECT NO: ----
DESIGN OFFICE: BURLEY
DESIGNED BY: ----
DRAWN BY: ----
CHK'D BY: ----
APPROVED BY: ----
DATE: JUNE 2025

C001

SHEET 4 OF 10

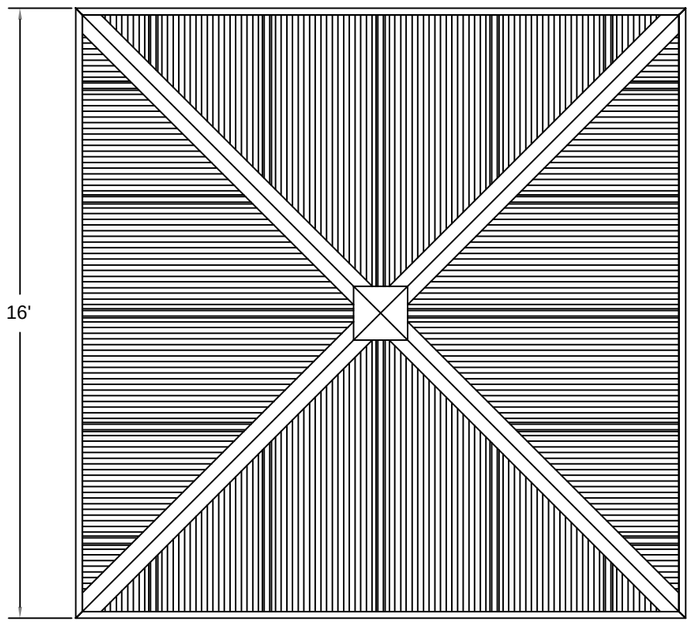

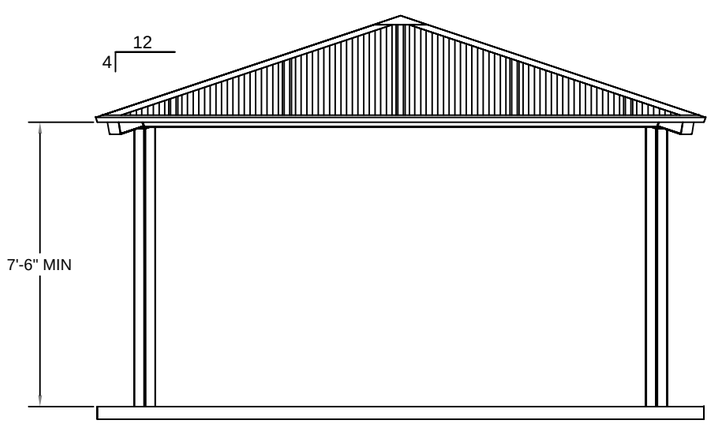

STRUCTURAL NOTES:

1. RCP SHELTERS INC. OR APPROVED EQUAL, HIP SHELTER STEEL COLOR TO BE KYNAR 500 OR APPROVED EQUAL AND APPROVED BY THE GOVERNMENT.
2. RCP SHELTERS INC. OR APPROVED EQUAL, METAL ROOF SHEETING COLOR TO BE DARK GRAY AND APPROVED BY THE GOVERNMENT.
3. STRUCTURAL DESIGN SHALL BE CERTIFIED BY A IDAHO PROFESSIONAL ENGINEER. (013300 1.6 AND 130470 1.5)

FINAL BUILD AND FOUNDATION DESIGN NOTES:

1. ACTUAL SIZES, LAYOUT, AND LOADING SHALL BE PROVIDED BY THE PRE-ENGINEERED METAL BUILDING DESIGNER.
2. ALL RELEVANT BUILDING LOADS AND LOAD COMBINATIONS PER ASCE 7 SHALL BE CHECKED FOR MOST CRITICAL CONDITIONS.
3. THE FINAL FOUNDATION DESIGN SHALL BE BY THE FOUNDATION ENGINEER WITH THE ACTUAL SIZES, LAYOUT, AND LOADS PROVIDED BY THE PRE-ENGINEERED METAL BUILDING DESIGNER.
4. METAL BUILDING COLUMNS BASE PLATES AND ANCHOR BOLT REQUIREMENTS SHALL BE PROVIDED BY THE PRE-ENGINEERED METAL BUILDING DESIGNER.
5. THE CONTRACTOR IS RESPONSIBLE FOR FINAL FOUNDATION AND BUILDING DESIGN AND SHALL COORDINATE ALL APPROVALS WITH THE GOVERNMENT.
6. PAVILION DRAWINGS SHOW ASSUMED MINIMUM REQUIREMENTS. FINAL REQUIREMENTS WILL BE BASED ON DELEGATED DESIGN FROM PAVILION STRUCTURE ENGINEER PER 013300 1.6 AND 130470 1.5.

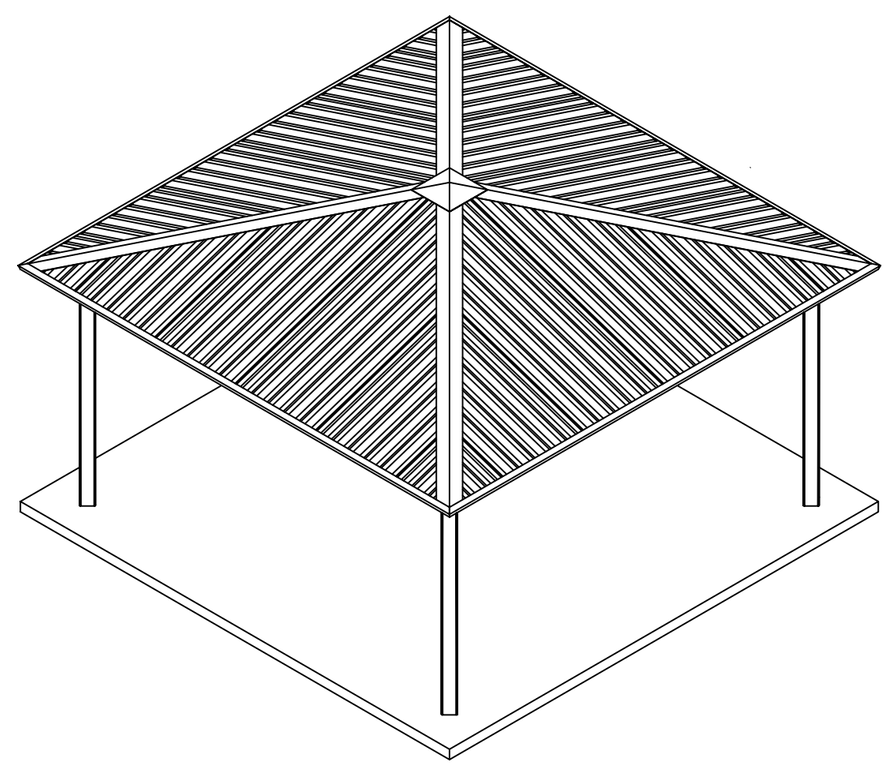

NATIONAL SYSTEM OF PUBLIC LANDS
U.S. DEPARTMENT OF THE INTERIOR
U.S. BUREAU OF LAND MANAGEMENT

UNITED STATES DEPARTMENT OF THE INTERIOR
BUREAU OF LAND MANAGEMENT

SQUARE PAVILION STRUCTURE 1

GAOA MILNER PICNIC SITE CABANA REPLACEMENT

TWIN FALLS DISTRICT IDAHO

MARK	DESCRIPTION	DATE	APPROVED

PROJECT NO: ----
DESIGN OFFICE: BURLEY
DESIGNED BY: ----
DRAWN BY: ----
CHK'D BY: ----
APPROVED BY: ----
DATE: JUNE 2025

S101

SHEET 5 OF 10

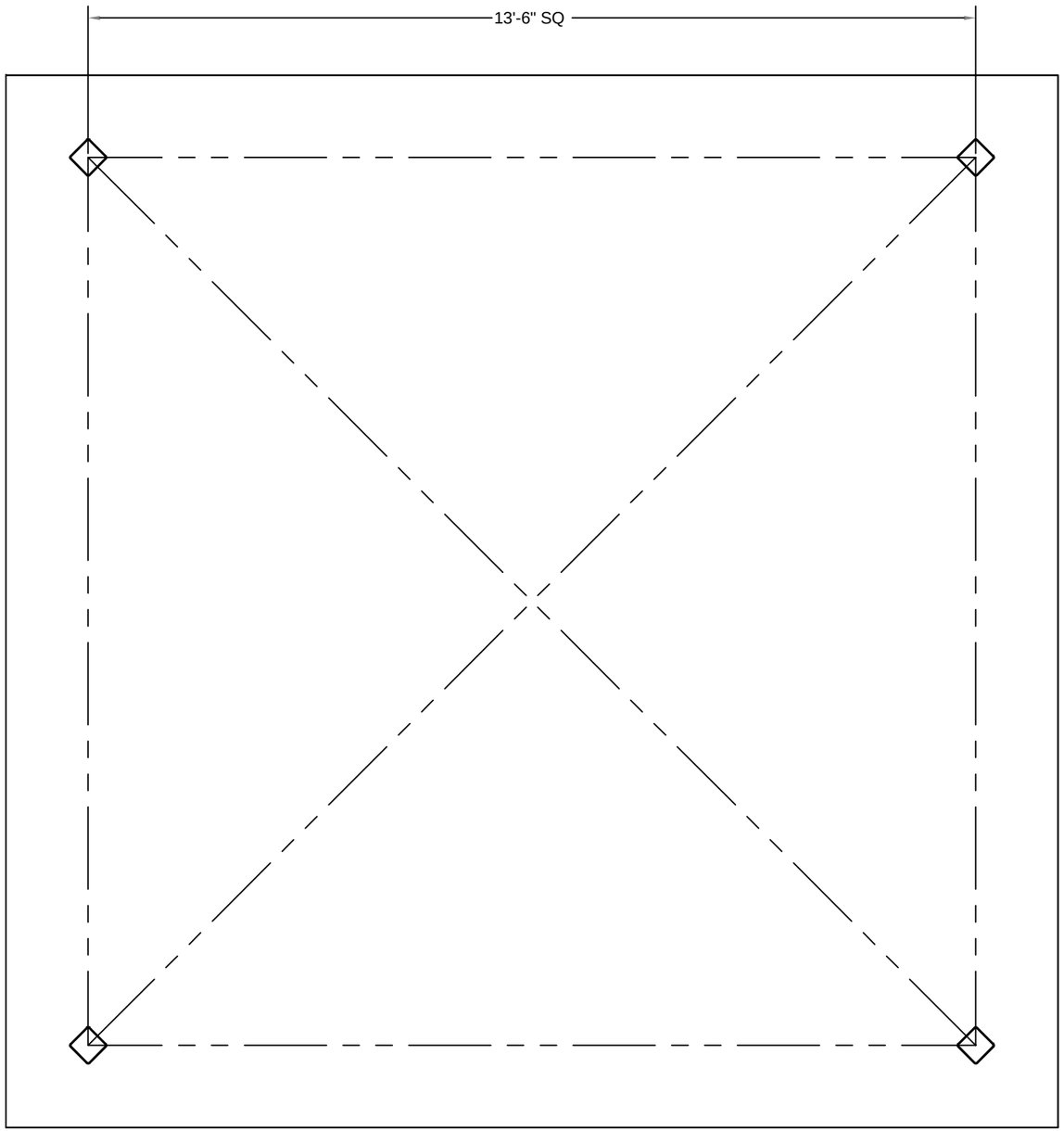

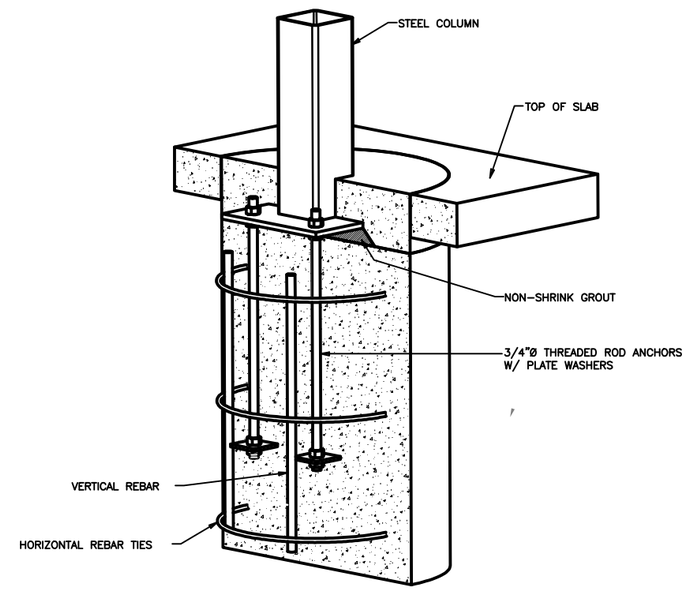

STEEL COLUMN PIER DETAIL

TYPICAL PIER DIAMETER IS BETWEEN 2'-0" AND 3'-0"±
TYPICAL PIER DEPTH IS BETWEEN 3'-6" AND 5'-6"±

ACTUAL DESIGN WILL VARY DUE TO BUILDING CODE REQUIREMENTS AND MAY BE SUBSTANTIALLY LARGER.

STRUCTURAL DESIGN NEEDS TO BE CERTIFIED BY A IDAHO PE.

PAVILION FOUNDATION DRAWINGS AS SHOWN ARE ASSUMED MINIMUM REQUIREMENTS. FINAL REQUIREMENTS WILL BE BASED ON DELEGATED DESIGN FROM PAVILION STRUCTURAL ENGINEER PER 013300 1.6 AND 130470 1.5. ENSURE SHOP DRAWINGS SHOW DETAIL OF INTERACTION BETWEEN SLAB THICKENED EDGE AND PIER.

NATIONAL SYSTEM OF PUBLIC LANDS
U.S. DEPARTMENT OF THE INTERIOR
U.S. BUREAU OF LAND MANAGEMENT

UNITED STATES DEPARTMENT OF THE INTERIOR
BUREAU OF LAND MANAGEMENT

SQUARE PAVILION STRUCTURE 2

GAOA MILNER PICNIC SITE CABANA REPLACEMENT

TWIN FALLS DISTRICT IDAHO

MARK	DESCRIPTION	DATE	APPROVED

PROJECT NO: ----
DESIGN OFFICE: BURLEY
DESIGNED BY: ----
DRAWN BY: ----
CHK'D BY: ----
APPROVED BY: ----
DATE: JUNE 2025

S103

NOTE:

THIS SHEET IS PROVIDED TO SHOW GENERAL BUILDING CONFIGURATION AND ARCHITECTURAL ONLY, FINAL DESIGN TO BE PROVIDED BY PAVILION MANUFACTURER.

UNITED STATES DEPARTMENT OF THE INTERIOR
BUREAU OF LAND MANAGEMENT

SQUARE PAVILION STRUCTURE 3

GAOA MILNER PICNIC SITE CABANA REPLACEMENT

TWIN FALLS DISTRICT IDAHO

MARK	DESCRIPTION	DATE	APPROVED

PROJECT NO: ----
DESIGN OFFICE: BURLEY
DESIGNED BY: ----
DRAWN BY: ----
CHK'D BY: ----
APPROVED BY: ----
DATE: JUNE 2025

S104

SHEET 7 OF 10

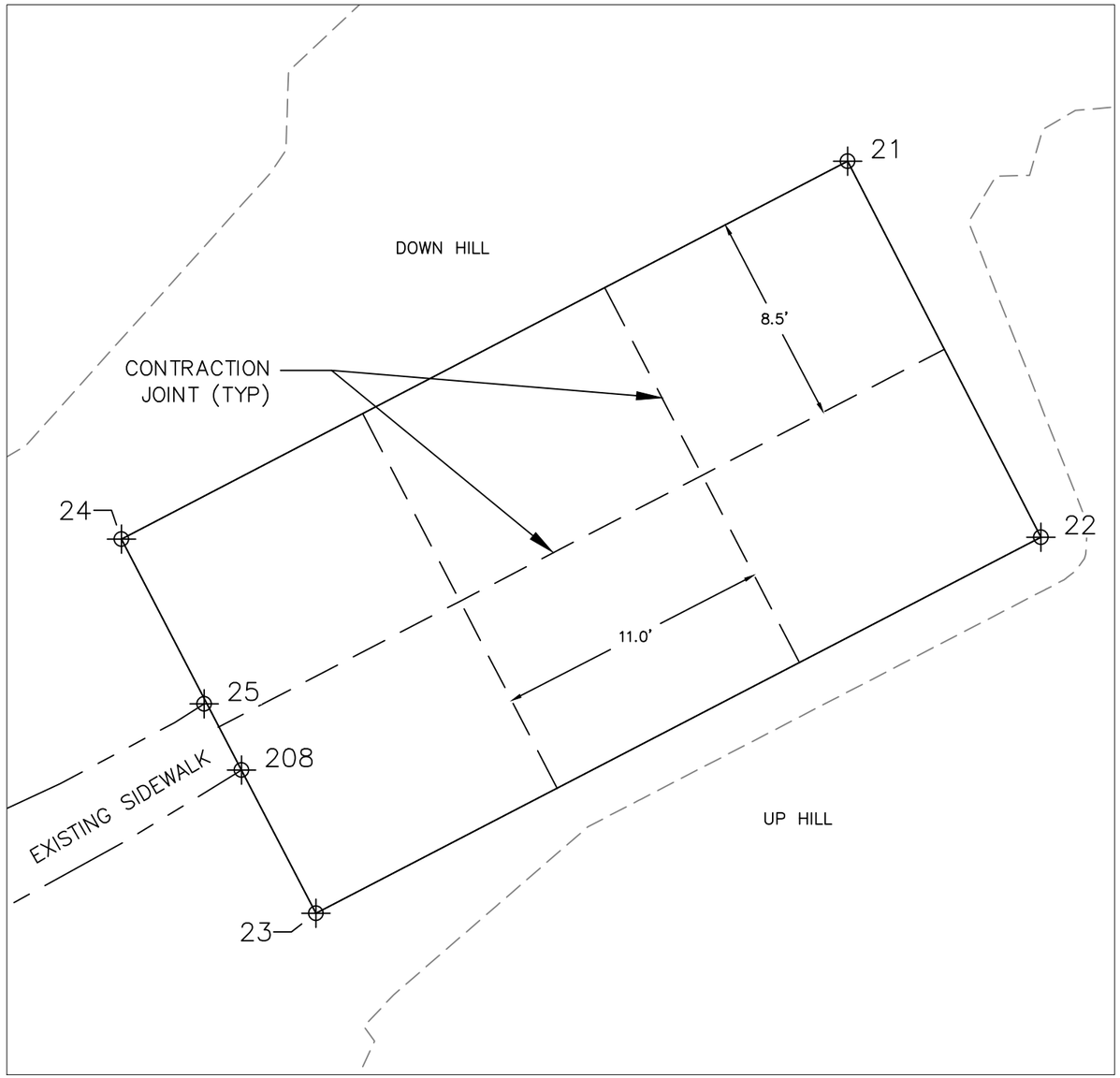

CONCRETE PAD (NTS)

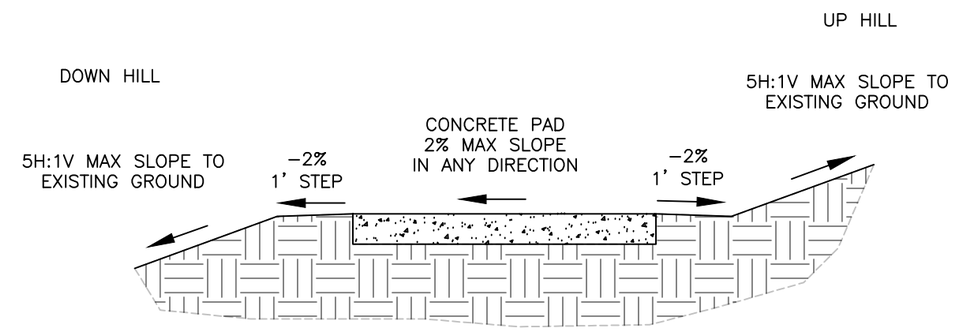

SIDE SLOPE DETAILS (NTS)

NOTE:

17x33 CONCRETE PAD FOR A 16x32 PAVILION.

THE CONCRETE PAD IS TO BE 6" THICK.

DEMOLISH EXISTING STRUCTURE.

THE NEW PAVILION WILL MATCH ELEVATION OF EXISTING SIDEWALK.

ENSURE SLOPE, MAXIMUM TRANSITION HEIGHTS, SURFACES, ETC. MEET ARCHITECTURAL BARREIRS ACT REQUIREMENTS (42 U.S.C. 4151–4157, 36 CFR PART 1191)

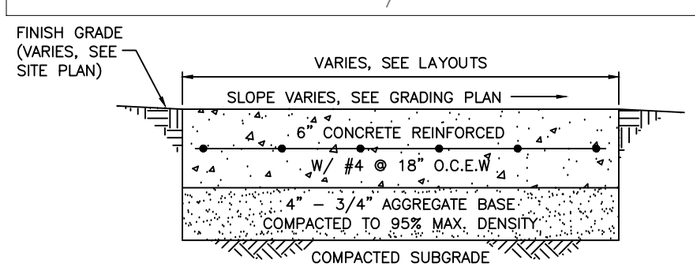

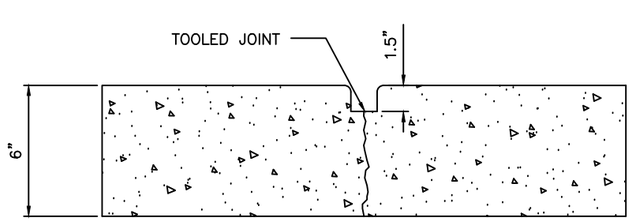

CONCRETE DETAILS (NTS)

CONCRETE				
Point #	Elevation	Northing	Easting	Description
21	4168.51	15461230.49	2450726.66	Concrete
22	4168.82	15461215.33	2450734.45	Concrete
23	4168.82	15461200.18	2450705.23	Concrete
24	4168.55	15461215.26	2450697.38	Concrete
25	4168.69	15461208.62	2450700.72	SIDEWALK
208	4168.69	15461205.95	2450702.23	SIDEWALK

NATIONAL SYSTEM OF PUBLIC LANDS
U.S. DEPARTMENT OF THE INTERIOR
BUREAU OF LAND MANAGEMENT

UNITED STATES DEPARTMENT OF THE INTERIOR
BUREAU OF LAND MANAGEMENT

17X33 CONCRETE PAD

GAOA MILNER PICNIC SITE CABANA REPLACEMENT

TWIN FALLS DISTRICT IDAHO

MARK	DESCRIPTION	DATE	APPROVED

PROJECT NO: ----
DESIGN OFFICE: BURLEY
DESIGNED BY: ----
DRAWN BY: ----
CHK'D BY: ----
APPROVED BY: ----
DATE: JUNE 2025

C002

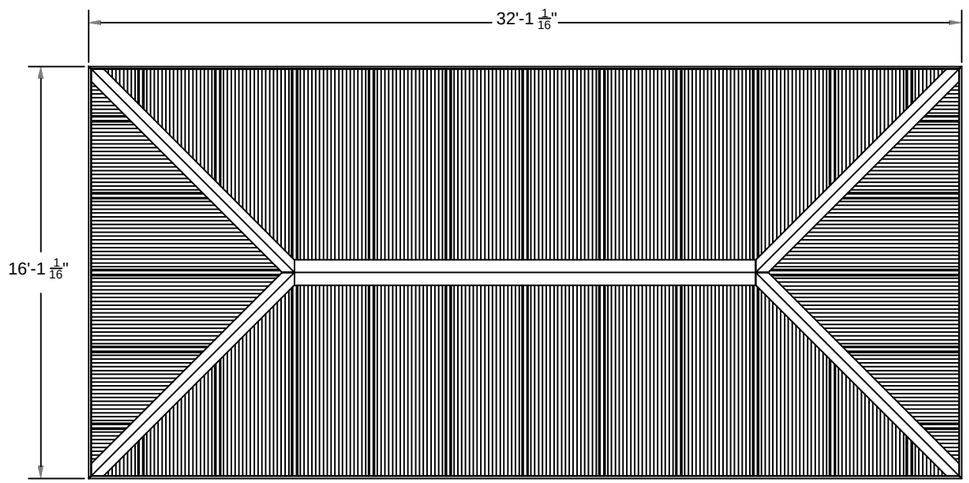

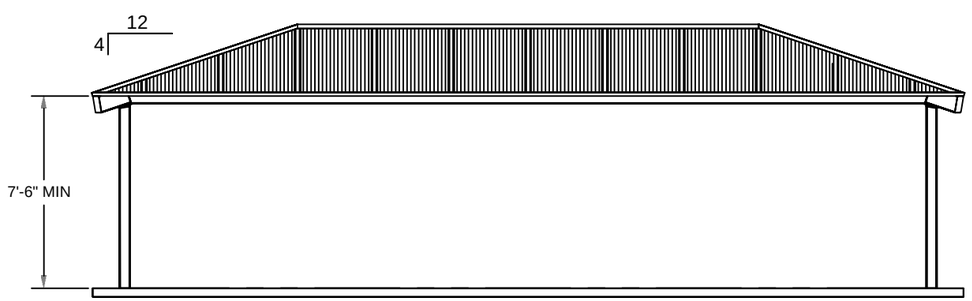

STRUCTURAL NOTES:

1. RCP SHELTERS INC. OR APPROVED EQUAL, HIP SHELTER STEEL COLOR TO BE KYNAR 500 OR APPROVED EQUAL AND APPROVED BY THE GOVERNMENT.
2. RCP SHELTERS INC. OR APPROVED EQUAL, METAL ROOF SHEETING COLOR TO BE DARK GRAY AND APPROVED BY THE GOVERNMENT.
3. STRUCTURAL DESIGN SHALL BE CERTIFIED BY A IDAHO PROFESSIONAL ENGINEER. (013300 1.6 AND 130470 1.5)

FINAL BUILD AND FOUNDATION DESIGN NOTES:

1. ACTUAL SIZES, LAYOUT, AND LOADING SHALL BE PROVIDED BY THE PRE-ENGINEERED METAL BUILDING DESIGNER.
2. ALL RELEVANT BUILDING LOADS AND LOAD COMBINATIONS PER ASCE 7 SHALL BE CHECKED FOR MOST CRITICAL CONDITIONS.
3. THE FINAL FOUNDATION DESIGN SHALL BE BY THE FOUNDATION ENGINEER WITH THE ACTUAL SIZES, LAYOUT, AND LOADS PROVIDED BY THE PRE-ENGINEERED METAL BUILDING DESIGNER.
4. METAL BUILDING COLUMNS BASE PLATES AND ANCHOR BOLT REQUIREMENTS SHALL BE PROVIDED BY THE PRE-ENGINEERED METAL BUILDING DESIGNER.
5. THE CONTRACTOR IS RESPONSIBLE FOR FINAL FOUNDATION AND BUILDING DESIGN AND SHALL COORDINATE ALL APPROVALS WITH THE GOVERNMENT.
6. PAVILION DRAWINGS SHOW ASSUMED MINIMUM REQUIREMENTS. FINAL REQUIREMENTS WILL BE BASED ON DELEGATED DESIGN FROM PAVILION STRUCTURE ENGINEER PER 013300 1.6 AND 130470 1.5.

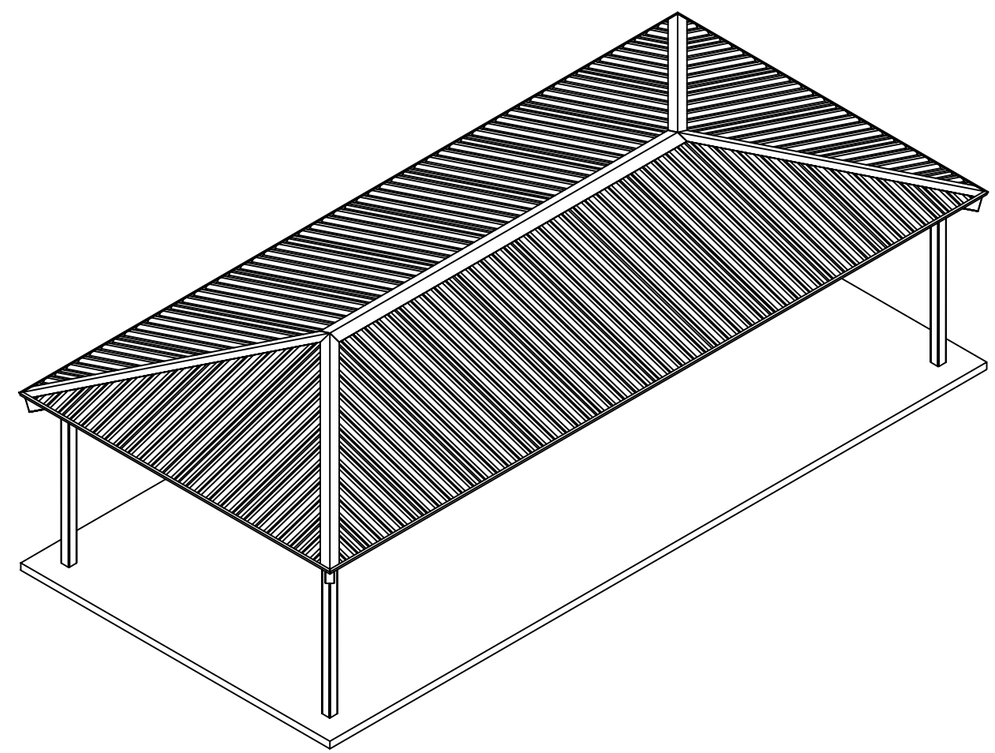

NATIONAL SYSTEM OF PUBLIC LANDS
U.S. DEPARTMENT OF THE INTERIOR
U.S. BUREAU OF LAND MANAGEMENT

UNITED STATES DEPARTMENT OF THE INTERIOR
BUREAU OF LAND MANAGEMENT

RECTANGULAR PAVILION STRUCTURE 4

GAOA MILNER PICNIC SITE CABANA REPLACEMENT

TWIN FALLS DISTRICT IDAHO

MARK	DESCRIPTION	DATE	APPROVED

PROJECT NO: ----
DESIGN OFFICE: BURLEY
DESIGNED BY: ----
DRAWN BY: ----
CHK'D BY: ----
APPROVED BY: ----
DATE: JUNE 2025

S105

SHEET 9 OF 10

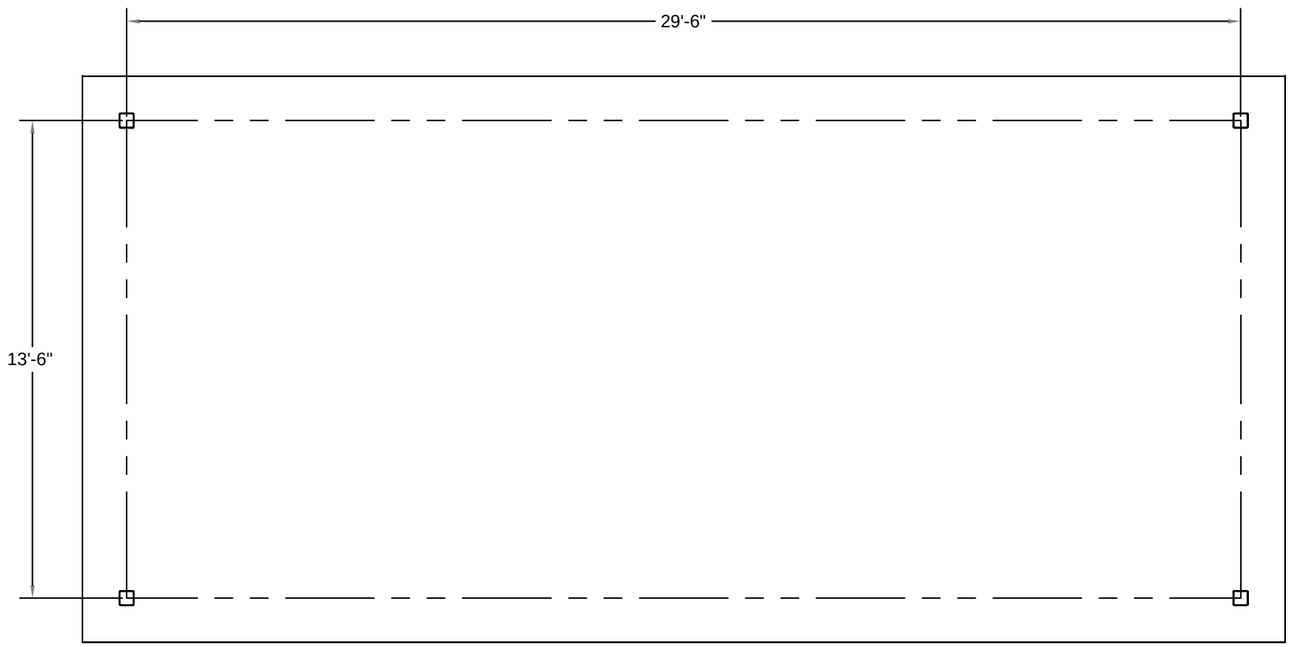

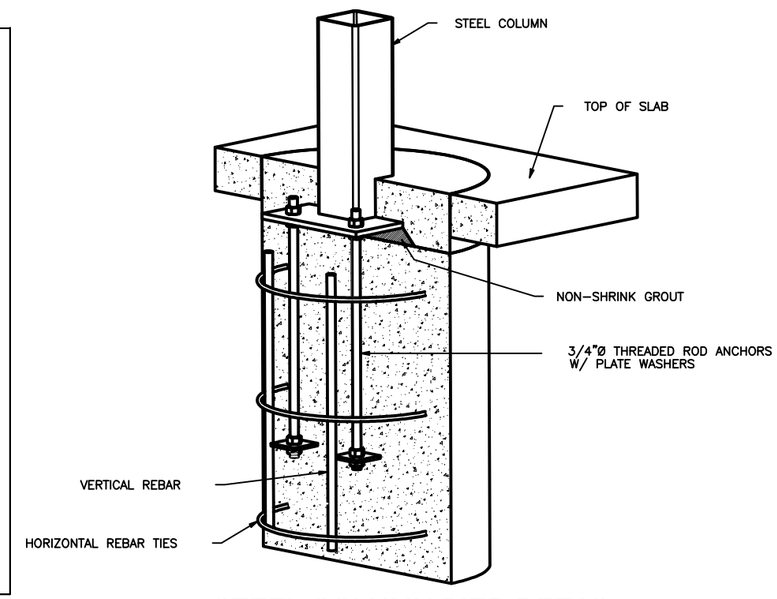

STEEL COLUMN PIER DETAIL

TYPICAL PIER DIAMETER IS BETWEEN 2'-0" AND 3'-0"±
TYPICAL PIER DEPTH IS BETWEEN 3'-6" AND 5'-6"±

ACTUAL DESIGN WILL VARY DUE TO BUILDING CODE REQUIREMENTS AND MAY BE SUBSTANTIALLY LARGER.

PAVILION FOUNDATION DRAWINGS AS SHOWN ARE ASSUMED MINIMUM REQUIREMENTS. FINAL REQUIREMENTS WILL BE BASED ON DELEGATED DESIGN FROM PAVILION STRUCTURAL ENGINEER PER 013300 1.6 AND 130470 1.5. ENSURE SHOP DRAWINGS SHOW DETAIL OF INTERACTION BETWEEN SLAB THICKENED EDGE AND PIER.

NATIONAL SYSTEM OF PUBLIC LANDS
U.S. DEPARTMENT OF THE INTERIOR
U.S. BUREAU OF LAND MANAGEMENT

UNITED STATES DEPARTMENT OF THE INTERIOR
BUREAU OF LAND MANAGEMENT

RECTANGULAR PAVILION STRUCTURE 5

GAOA MILNER PICNIC SITE CABANA REPLACEMENT

TWIN FALLS DISTRICT IDAHO

MARK	DESCRIPTION	DATE	APPROVED

PROJECT NO: ----
DESIGN OFFICE: BURLEY
DESIGNED BY: ----
DRAWN BY: ----
CHK'D BY: ----
APPROVED BY: ----
DATE: JUNE 2025

S107

SHEET 10 OF 10