GENERAL

G1. SCOPE
THE NOTES ON THIS SHEET AND THE STANDARD STRUCTURAL DETAILS ARE GENERAL AND APPLY TO THE ENTIRE PROJECT WHETHER SPECIFICALLY CALLED OUT OR NOT, EXCEPT WHERE THERE ARE SPECIFIC INDICATIONS TO THE CONTRARY ON STRUCTURAL SHEETS. IF THERE ARE QUESTIONS, THEY SHALL BE SUBMITTED TO THE CONTRACTING OFFICER AND ANSWERED IN WRITING PRIOR TO CONSTRUCTION.

G2. APPLICABLE SPECIFICATIONS AND CODES
A. INTERNATIONAL BUILDING CODE, IBC 2024 WITH APPLICABLE EDITIONS OF THE CODE REFERENCED STANDARDS.
B. AUTHORITY HAVING JURISTICTION: NATIONAL PARK SERVICE (WIND, SNOW, AND SEISMIC DESIGN CRITERIA IN ACCORDANCE WITH THE MORE CONSERVATIVE OF COCONINO COUNTY, AZ AND NATIONAL PARK SERVICE).
C. BUILDING CODE REQUIREMENTS FOR REINFORCED CONCRETE, ACI 318-19
D. ASTM MATERIAL STANDARDS AS NOTED

G3. DESIGN CRITERIA
1. APPLIES TO ALL STRUCTURES (UNO)
A. DEAD LOAD:
1. ACTUAL TRIBUTARY STRUCTURE WEIGHT
B. LIVE LOAD:
1. SLAB ON GRADE: 250 PSF
2. WALKWAYS, STAIRS, GRATING (UNO): 100 PSF
C. WIND:
1. ULTIMATE WIND SPEED (V_{ULT}): 111 MPH
2. TORNADO SPEED (V_T): NOT APPLICABLE PER ASCE 7, FIG. 32.1-1 & 1-2
3. NOMINAL WIND SPEED (V_{ASD}): 86 MPH
4. RISK CATEGORY: IV
5. EFFECTIVE AREA (A_E): NOT APPLICABLE
6. EXPOSURE CATEGORY: C
7. ALL STRUCTURES: ENCLOSED
8. INTERNAL PRESSURE COEFFICIENT (GC_{pi}): +/- 0.18
9. DESIGN WIND PRESSURE: 23 PSF
10. COMPONENTS AND CLADDING PRESSURE: ******

D. SEISMIC:
1. ABOVE GRADE, NON WATER BEARING STRUCTURES:
a. RISK CATEGORY: IV
b. IMPORTANCE FACTOR: 1.5
c. SPECTRAL RESPONSE ACCELERATION, S_S = 0.410g
d. SPECTRAL RESPONSE ACCELERATION, S_1 = 0.110g
e. SITE CLASS: C
f. SEISMIC DESIGN CATEGORY: C
g. SPECTRAL RESPONSE ACCELERATION, S_{DS} = 0.30g
h. SPECTRAL RESPONSE ACCELERATION, S_{D1} = 0.11g
i. BASIC SEISMIC FORCE RESISTING SYSTEM: ASCE 7-22, CHAPT 13: MECH EQUIPMENT SUPPORT STRUCTURES AND PLATFORMS, OTHER STRUCTURES.
j. ANALYSIS PROCEDURE: EQUIVALENT LATERAL FORCE
k. COMPONENT RESONANCE DUCTILITY FACTOR: 2.8
l. COMPONENT STRENGTH FACTOR: 1.50
m. DESIGN BASE SHEAR: 84 KIPS

E. SNOW LOAD:
1. GROUND SNOW LOAD (p_g) = 260 PSF
2. FLAT ROOF SNOW LOAD (p_f) = 200 PSF
3. EXPOSURE FACTOR (C_e) = 1.0
4. RISK CATEGORY = IV
5. THERMAL FACTOR (C_t) = 1.1
6. SLOPED ROOF FACTOR (C_S) = 0.91
7. WINTER WIND PARAMETER (W_2) = 0.35

G4. THE FOLLOWING NON-CONTRACTUAL GEOTECHNICAL REPORT WAS DEVELOPED FOR THIS PROJECT AND IS THE BASIS OF THIS STRUCTURAL DESIGN:
GEOTECHNICAL FIRM NAME: LITHOS ENGINEERING
ADDRESS: 2750 S. WADSWORTH BLVD, SUITE D-200
DENVER, CO 80227
REPORT NUMBER: 21186
REPORT DATE: JANUARY 16, 2024

1. FROST DEPTH: 36 IN
2. NET ALLOWABLE BEARING PRESSURE (GRAVITY) = 3 KSF
3. NET ALLOWABLE BEARING PRESSURE (WIND/SEISMIC) = 4 KSF
4. COEFFICIENT OF FRICTION: = 0.35
5. SUBGRADE MODULUS: = 125 PSI/IN
6. ACTIVE LATERAL SOIL PRESSURE: = 42 PCF
7. AT-REST LATERAL SOIL PRESSURE: = 63 PCF
8. PASSIVE LATERAL SOIL PRESSURE: = 200 PCF

G5. SAFETY
SAFETY AND STRUCTURE STABILITY DURING CONSTRUCTION ARE THE SOLE RESPONSIBILITY OF THE CONTRACTOR. STRUCTURES HAVE BEEN DESIGNED TO RESIST THE DESIGN LIVE LOADS ONLY AS A COMPLETED STRUCTURE.

GENERAL (CONTINUED)

G6. OPENINGS
OPENINGS FOR PIPES, DUCTS, CONDUITS, ETC. ARE NOT ALL SHOWN ON THE STRUCTURAL DRAWINGS. COORDINATE AND PROVIDE OPENINGS AS REQUIRED TO ACCOMMODATE ALL WORK SHOWN OR SPECIFIED IN THE CONTRACT DOCUMENTS AND OTHERWISE REQUIRED FOR THE FURNISHING OF A FUNCTIONALLY COMPLETE PROJECT. REINFORCE AROUND OPENINGS PER STANDARD STRUCTURAL DETAILS UNLESS OTHERWISE SHOWN.

G7. SPECIAL INSPECTIONS
SPECIAL INSPECTIONS ARE REQUIRED IN ACCORDANCE WITH CHAPTER 1 AND CHAPTER 17 OF THE IBC. THE CONTRACTOR IS RESPONSIBLE FOR STRUCTURAL SPECIAL INSPECTIONS (SSI) BY QUALIFIED PERSONNEL. THE CONTRACTOR SHALL PROVIDE FOR FULL ACCESS TO THE WORK BY STSI AGENTS AND SHALL PROVIDE FOR THESE INSPECTIONS IN THEIR CONSTRUCTION SCHEDULE IN ACCORDANCE WITH THE SPECIFICATIONS. THE SPECIAL INSPECTION PROGRAM AND STATEMENT OF SPECIAL INSPECTIONS SHALL BE IN ACCORDANCE WITH 01 40 00.

G8. GENERAL DETAILS
THE STANDARD DETAILS ON SHEET S200 DEPICT TYPICAL DETAILING TO BE USED ON THIS PROJECT. IF CONDITIONS ARE NOT EXPLICITLY SHOWN ON THE DRAWINGS THEY SHALL BE MADE SIMILAR TO THE STANDARD DETAILS. OBTAIN APPROVAL OF THE CONTRACTING OFFICER IN WRITING FOR SIMILAR CONDITIONS PRIOR TO CONSTRUCTION.

G9. FIELD VERIFY ALL DIMENSIONS AND ELEVATIONS OF EXISTING CONSTRUCTION AS REQUIRED TO COORDINATE NEW CONSTRUCTION. SUBMIT REQUIRED CHANGES FOR APPROVAL.

G10. SUBMIT FOR REVIEW ALL EQUIPMENT SIZES, OPERATING WEIGHTS, VIBRATION FORCES, SUPPORT LOCATIONS, ALONG WITH ANY FLOOR OPENINGS, NOTCHES, AND RECESSES REQUIRED BY SUCH EQUIPMENT. CONCRETE SUPPORT PADS AND/OR FRAMING REQUIRED TO SUPPORT SAID EQUIPMENT SHALL NOT BE FABRICATED AND PLACED UNTIL THE CONCRETE SUPPORT PADS AND/OR FRAMING IS APPROVED TO SUPPORT THE EQUIPMENT.

CONCRETE

C1. DESIGN STRENGTHS:
F'c = 4,500 PSI
REBAR Fy = 60,000 PSI

C2. CONCRETE COVER
UNLESS OTHERWISE NOTED, PROVIDE CONCRETE COVER FOR REINFORCING AS FOLLOWS:
CONCRETE DEPOSITED AGAINST EARTH: 3 INCH
FORMED SURFACES EXPOSED TO WEATHER, WATER, OR IN CONTACT WITH EARTH:
a. 2 INCH
INTERIOR DRY SURFACES:
a. 1-1/2 INCH FOR BEAMS, GIRDERS, AND COLUMNS.
b. 1-1/2 INCH FOR SLABS, WALLS
ALL OTHER: 2 INCH
SEE DRAWINGS FOR EXCEPTIONS

C3. SEE SPECIFICATIONS FOR REINFORCING PLACEMENT REQUIREMENTS.

C4. REFER TO OTHER DISCIPLINE DRAWINGS PRIOR TO CONSTRUCTION FOR EMBEDDED ITEMS AND PENETRATIONS NOT SHOWN ON STRUCTURAL DRAWINGS. AS REQUIRED TO ACCOMMODATE ALL WORK SHOWN OR SPECIFIED IN THE CONTRACT DOCUMENTS AND OTHERWISE REQUIRED FOR THE FURNISHING OF A FUNCTIONALLY COMPLETE PROJECT. REINFORCE AROUND OPENINGS PER STANDARD STRUCTURAL DETAILS UNLESS OTHERWISE SHOWN.

C5. PROVIDE 3/4" CHAMFERS AT ALL EXPOSED EDGES. NOT ALL CHAMFERS MAY BE SHOWN ON DRAWINGS.

C6. FIELD ADJUST REINFORCING AT OPENINGS AND EMBEDDED ITEMS AS INDICATED.

C7. ANCHOR BOLTS NOT SPECIFIED BY CONTRACTING OFFICER SHALL BE DESIGNED AND CERTIFIED BY A REGISTERED PROFESSIONAL CONTRACTING OFFICER LICENSED IN THE STATE OF ARIZONA, RETAINED BY THE CONTRACTOR, IN ACCORDANCE WITH APPLICABLE PROJECT AND CODE REQUIREMENTS. SUBMIT AS A SHOP DRAWING FOR REVIEW AND APPROVAL BY THE CONTRACTING OFFICER. COORDINATE LOCATION, SIZE AND EMBEDMENT PRIOR TO CASTING CONCRETE.

C8. CONTINUOUS WATERSTOP SHALL BE INSTALLED IN JOINTS SUBJECT TO STATIC WATER PRESSURE.

C9. ABSOLUTELY NO WELDING OF REINFORCING BARS OR TORCHING TO BEND REINFORCING BARS SHALL BE ALLOWED WITHOUT SPECIFIC APPROVAL FROM THE CONTRACTING OFFICER.

C10. CONTRACTOR SHALL SUBMIT A CONCRETE PLACEMENT PLAN PER SPECIFICATION 03 31 31 IDENTIFYING JOINT TYPES, JOINT LOCATIONS AND CONCRETE PLACEMENT SEQUENCE.

C11. ALL CAST IN PLACE AND POST-INSTALLED ANCHORS INDICATED IN THE STRUCTURAL DOCUMENTS SHALL COMPLY WITH CHAPTER 17 OF ACI 318 AND CHAPTER 19 OF THE IBC. ALL EXPANSION AND ADHESIVE ANCHORS SHALL HAVE THE ICC REPORT SHOWING EQUIVALENT LOAD CAPACITY. SUBMIT AND INSTALL PER THE ICC EVALUATION REPORT.

DELEGATED SUBMITALS

D1. DEFINITION:
DELEGATED DESIGN SUBMITTALS ARE ITEMS FOR WHICH THE FINAL DESIGN OF A SPECIFIC ELEMENT OF THE PERMANENT CONSTRUCTION WORK EXPRESSLY DELEGATED TO A PROPERLY LICENSED AND REGISTERED DESIGN PROFESSIONAL RETAINED OR EMPLOYED BY THE CONTRACTOR, SUBCONTRACTOR, SUPPLIER OF ANY TIER. "DELEGATED DESIGN" APPLIES ONLY TO PERMANENT WORK THAT WILL BE PART OF THE COMPLETED PROJECT AS A FUNCTIONING WHOLE.

D2. DELEGATED DESIGN LIST:
THE FOLLOWING IS A LIST OF DELEGATED DESIGN SUBMITTALS THAT ARE EXPECTED TO CONTAIN STRUCTURAL CALCULATIONS OF SAFETY-RELATED SYSTEM INFORMATION FOR REVIEW. THESE SUBMITTALS APPLY TO DELEGATED DESIGNED SYSTEMS PRIOR TO INSTALLATION OF THE INDICATED STRUCTURAL ELEMENT, EQUIPMENT, DISTRIBUTION SYSTEM, COMPONENT, OR ITS ANCHORAGE. THE CONTRACTOR SHALL SUBMIT THE REQUIRED ENGINEER CERTIFICATION, SUPPORTING DATA, AND DRAWINGS FOR REVIEW AND ACCEPTANCE BY THE CONTRACTING OFFICER.

D3. DELEGATED DESIGN SUBMITTAL INCLUDE, BUT ARE NOT LIMITED TO, THE FOLLOWING:
1. TEMPORARY PROCESS EQUIPMENT
2. PRECAST CHANNEL VAULT
3. CIRCULAR MANHOLES
4. PACKAGE LIFT STATIONS
5. CHEMICAL STORAGE SHIPPING CONTAINERS.
6. EQUIPMENT ANCHORAGE AND BRACING WHERE REQUIRED BY TECHNICAL SPECIFICATIONS.

EARTHWORK

E1. ALL EARTHWORK AND SITE PREPARATION SHALL BE PERFORMED IN STRICT ACCORDANCE WITH THE SPECIFICATIONS. ALL FOUNDATION EXCAVATIONS SHALL BE OBSERVED AND APPROVED BY THE GEOTECHNICAL ENGINEER.

E2. ANY EXISTING FILLS OR UNSUITABLE SOILS AS DETERMINED BY THE GEOTECHNICAL ENGINEER SHALL BE EXCAVATED AND REPLACED WITH PROPERLY COMPACTED SELECT FILL PER SPECIFICATIONS.

E3. ALL FOUNDATIONS AND SLABS ON GRADE SHALL BEAR ON A MINIMUM DEPTH OF PROPERLY COMPACTED SELECT FILL AS INDICATED BELOW:
TEMPORARY TREATMENT TRANES AND MISC EQUIPMENT = 1 FT

E4. CONTRACTOR SHALL EXERCISE EXTREME CARE WHEN EXCAVATING OR GRADING ADJACENT TO EXISTING STRUCTURES SO AS TO NOT DAMAGE OR UNDERMINE FOUNDATIONS, WALLS, SLABS, OR UTILITIES, ETC.

E5. DO NOT EXCAVATE BELOW THE BEARING ELEVATION OF ANY COMPLETED FOOTING NOR ANY CLOSER TO THE FOOTING THAN A SLOPE OF TWO HORIZONTAL (MEASURED FROM EDGE OF FOOTING TO NEAREST POINT IN EXCAVATION) TO ONE VERTICAL.

STATEMENT OF STRUCTURAL TESTS AND SPECIAL INSPECTIONS

S1. REFER TO PROJECT MANUAL SECTION 01 40 00 - QUALITY REQUIREMENTS, AND SECTION 01 40 00-A - THE STATEMENT OF STRUCTURAL TESTS AND SPECIAL INSPECTIONS

REGISTERED PROFESSIONAL ENGINEER CERTIFICATE NO. 85509 JOHN T. CORONADO Date Signed 06/11/2026 ARIZONA U.S.A.

A/E FIRM	DESIGNED:	SUB SHEET NO.	TITLE OF SHEET	DRAWING NO.
PRIME: HDR ENGINEERING, INC. DENVER, CO 80202	J. CORONADO CADD J. CORONADO TECH. REVIEW: T. McINTOSH DATE: JUNE 2026	S001	GENERAL TEMPORARY WWTP STRUCTURAL GENERAL NOTES NORTH RIM - GRAND CANYON NATIONAL PARK	113 182752A PMIS/PKG NO. 318719 SHEET 24 OF 90

6/11/2026 Lynch, Nicole C:\Users\nlynch\DC\ACCDocs\HDR\10414450_NPS_GRCA_N_Rim_Utility_2026\Project Files\CAD_HDR\DRAWINGS\TEMPORARY WASTEWATER\STRUCTURAL\S001.dwg

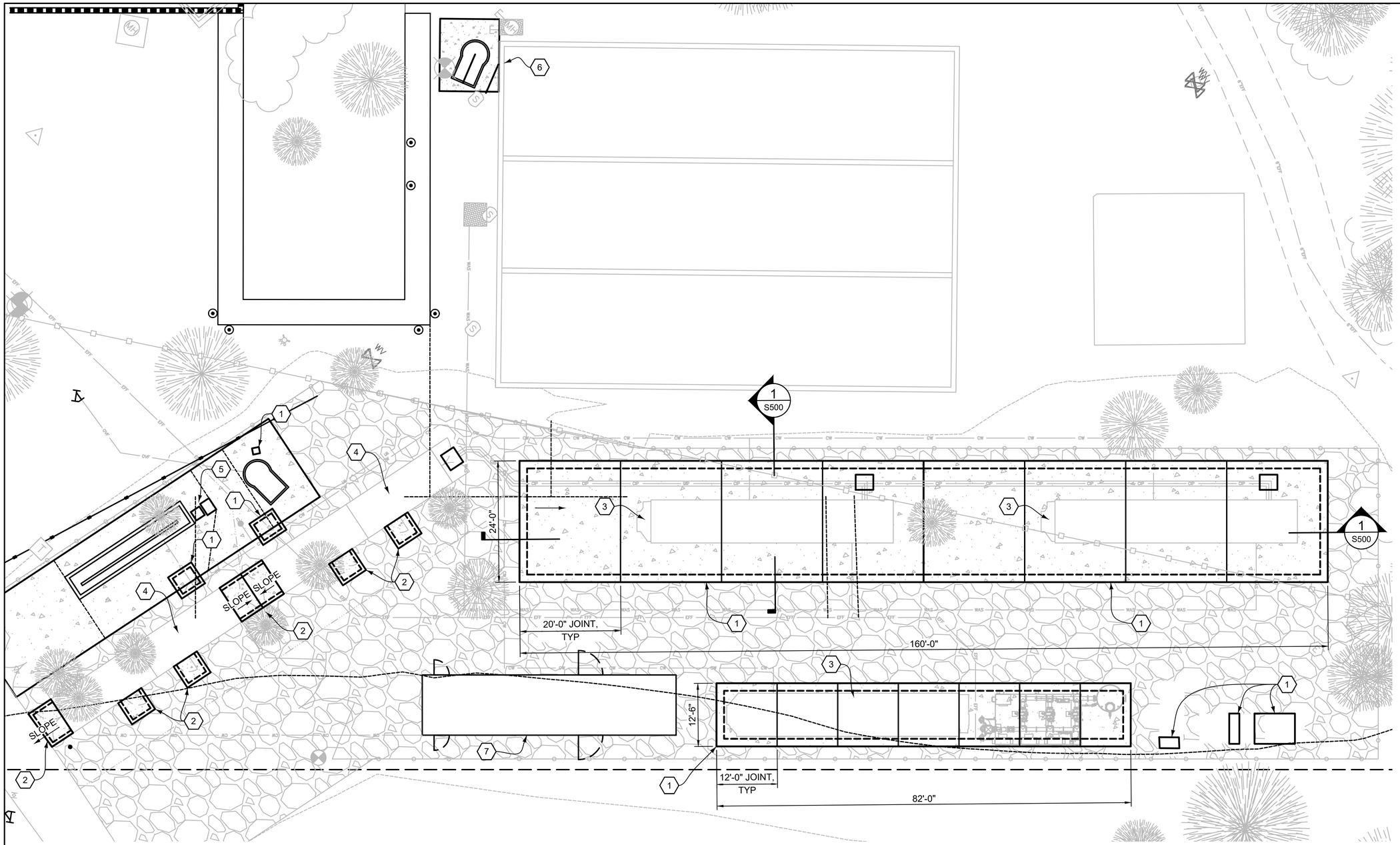

1 S100 EQUIPMENT PAD PLAN

SCALE (A)

GENERAL NOTES:

A. REFER TO SHEET S001 FOR STRUCTURAL GENERAL NOTES.

B. COORDINATE THIS PLAN WITH PROCESS AND CIVIL PLANS. CIVIL PLANS CONTAIN COORDINATE FOR STRUCTURE CORNERS FOR SITE LOCATION.

C. COORDINATE PENETRATIONS IN WALLS AND SLABS WITH PROCESS PIPING AND MECHANICAL EQUIPMENT.

D. REFER TO DIV 03 SPECIFICATIONS FOR CONCRETE.

KEYNOTES: (x)

1. CAST IN PLACE SITE PAD, SEE DETAIL 1/S500 FOR REINFORCING. REFER TO CIVIL PLAN FOR TOP OF CONCRETE ELEVATIONS.
2. CAST-IN-PLACE CONCRETE STOOP, SEE DETAIL 1/S501 FOR REINFORCING. AT CONNEX DOORS, SLOPE SLAB UP TO BE FLUSH TO FLOOR OF CONNEX AND SLOPE AWAY TO DRAIN.
3. TEMPORARY TREATMENT EQUIPMENT, SEE PROCESS.
4. CHEMICAL STORAGE BUILDING, SEE ARCH AND PROCESS.
5. PRECAST CHANNEL FOR SCREEN, SEE SHEET S400.
6. DAVIT CRANE BASE, SURFACE MOUNT TO EXISTING DRYING BED WALL. SEE DETAIL 4/S501. FIELD LOCATE AND COORDIATE LOCATION WITH LIFT STATION.
7. LAB BLDG, SEE PROCESS. ANCHORAGE BY MANUFACTURER.

SCALE (A) 10 0 10 20
SCALE OF FEET

REGISTERED PROFESSIONAL ENGINEER CERTIFICATE NO. 85509 JUAN CORONADO Date Signed 6/11/2026 ARIZONA U.S.A.

A/E FIRM	DESIGNED:	SUB SHEET NO.	TITLE OF SHEET	DRAWING NO.
PRIME: HDR ENGINEERING, INC. DENVER, CO 80202	J. CORONADO CADD J. CORONADO TECH. REVIEW: T. McINTOSH DATE: JUNE 2026	S100	GENERAL TEMPORARY WWTP OVERALL STRUCTURAL SITE PLAN NORTH RIM - GRAND CANYON NATIONAL PARK	113 182752A PMIS/PKG NO. 318719 SHEET 25 OF 90

6/11/2026 Lynch, Nicole C:\Users\nlynch\DC\ACCDocs\HDR\10414450_NPS_GRCA_N_Rim_Utility_2026\Project Files\CAD_HDR\DRAWINGS\TEMPORARY WASTEWATER\STRUCTURAL\S100.dwg

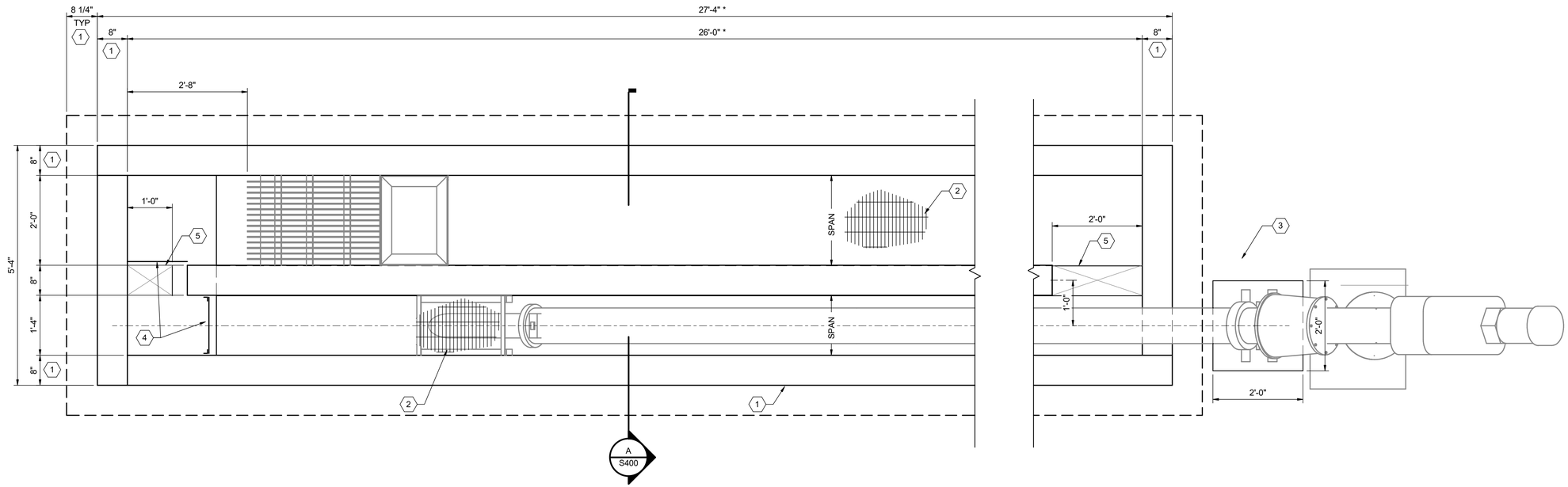

1 S400 INFLUENT CHANNEL - ENLARGED PLAN
SCALE A

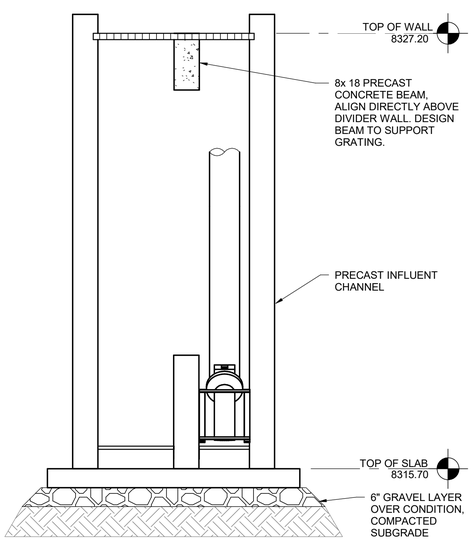

A S400 CHANNEL SECTION
SCALE B

GENERAL NOTES:

A. REFER TO OVERALL PLAN SHEET S100 FOR LOCATION AND CIVIL PLANS FOR COORDINATION.

B. COORDINATE THIS PLAN WITH PROCESS PIPING AND EQUIPMENT. ALL EQUIPMENT NOT SHOWN FOR CLARITY OF STRUCTURAL EXTENTS.

C. PRECAST TO BE DESIGNED BY OTHERS, REFER TO SPECIFICATION 03 41 33. REFER TO GENERAL NOTES ON SHEET S001 FOR GEOTECHNICAL DESIGN VALUES. MINIMUM REINF FOR WALLS AND SLAB TO BE #5 @ 8" EACH WAY, EACH FACE FOR 12" THICK MATERIALS.

D. REFER TO CIVIL FOR FLATWORK AROUND THE INFLUENT VAULT. PROVIDE ISOLATION JOINTS AROUND THE PRECAST AND FLATWORK, TYPICAL.

E. *FINAL DIMENSIONS SHALL BE COORDINATED BY CONTRACTOR WITH SCREENING EQUIPMENT.

KEYNOTES: X

1. PRECAST INFLUENT CHANNEL STRUCTURE. COORDINATE WITH PROCESS AND PROPOSED EQUIPMENT. GEOMETRY SHOWN ARE MINIMUMS. INTERIOR DIMENSIONS MUST BE MAINTAINED.

2. 2" BAR GALVANIZED STEEL GRATING OR GALVANIZED CHECKERED METAL PLATE PER DETAILS 2 AND 3 ON SHEET S501. PROVIDE REMOVABLE PANELS AS REQUIRED PER PROCESS.

3. 10" THICK CONCRETE PAD, REINF W/ #5 @ 12" EW, MID HEIGHT. ISOLATE PAD FROM PRECAST AND PROVIDE 1/2" BOND BREAKER.

4. SLIDE GATES PER PROCESS, CONNECT GATE FRAME AND STEM SHAFT TO WALL AS REQUIRED PER GATE MANUFACTURER. SUPPLEMENTAL STAINLESS STEEL FRAMING MAY BE REQUIRED BETWEEN WALL FRAMING.

5. 12" TALL BLOCK-OUT AT BOTTOM OF WALL.

6. MANUAL SCREEN PER PROCESS, PROVIDE STAINLESS STEEL ANGLES TO BAR SCREEN AGAINST WALL. FINAL SLOPE OF SCREEN TO BE 45 DEGREES.

7. WALL MOUNTED DAVIT CRANE, CONNECT WITH POST INSTALLED ADHESIVE ANCHORS TO PRECAST. COAT WITH BITUMINOUS COATING AFTER INSTALL AND PRIOR TO BACKFILL. LOCATE PER PROCESS.

SCALE B 2 0 2 4 SCALE OF FEET 1/2" = 1'-0"

SCALE A 1 0 1 2 3 SCALE OF FEET 3/4" = 1'-0"

REGISTERED PROFESSIONAL ENGINEER CERTIFICATE NO. 85509 JOAN CORONADO Date Signed 4/24/2026 ARIZONA U.S.A.

A/E FIRM	DESIGNED:	SUB SHEET NO.	TITLE OF SHEET	DRAWING NO.
PRIME: HDR ENGINEERING, INC. DENVER, CO 80202	J. CORONADO	S400	MULTIPLE STRUCTURE NAME INFLUENT SCREENING CHANNEL - PLAN	113 182752A
	DRAWN: J. CORONADO			PMIS/PKG NO. 318719
	TECH. REVIEW: T. McINTOSH			SHEET 26 OF 90
	DATE: JUNE 2026		NORTH RIM - GRAND CANYON NATIONAL PARK	

Autodesk Docs://10350545_NPS_GRCA_N_Rim_Utility_2026/10414450_131_MECH SCREEN_U.rvt
4/17/2026 3:03:52 PM

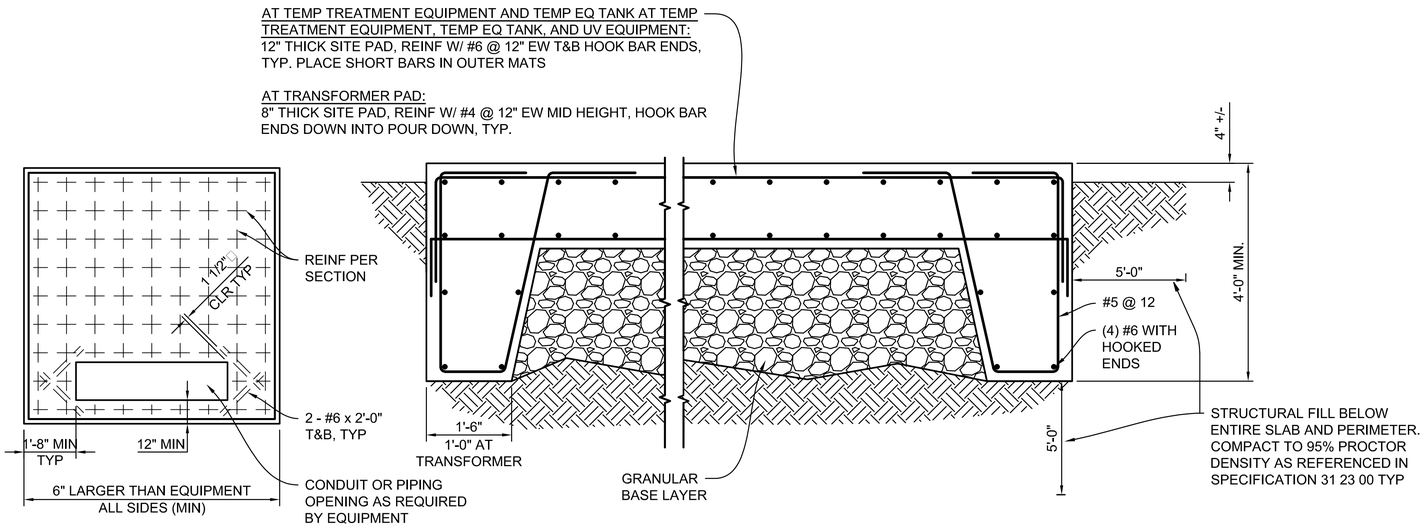

PLAN: CONDUIT OR PIPING OPENING
(WHERE OCCURS)

SECTION

1 - SITE PAD DETAILS
NO SCALE

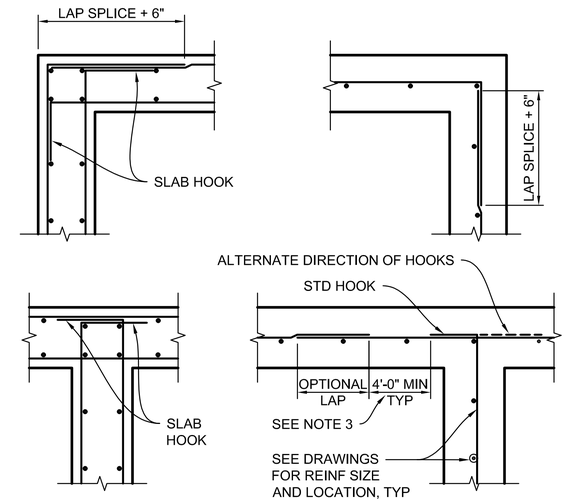

NOTES:

1. ALL HOOKS SHALL BE STD 90 DEGREE HOOKS.
2. SEE DRAWINGS FOR ADDITIONAL HORIZONTAL BARS. STAGGER BETWEEN TYPICAL REINF SPACING, EXTEND TO 1/5 OF DISTANCE TO NEAREST ADJACENT WALL IN EACH DIRECTION, UNO.
3. OPTIONAL LAP LOCATION. APPLIES TO BOTH DOUBLE AND SINGLE LAYER CONDITIONS TYP.

2 - WALL REINFORCEMENT AT CORNERS AND INTERSECTIONS
NO SCALE

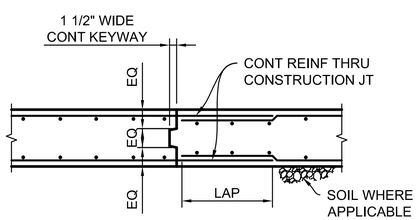

KEYED CONSTRUCTION JOINT (KCJ)

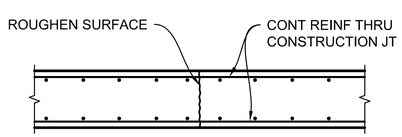

ROUGHEN CONSTRUCTION JOINT

3 - KEYED CONSTRUCTION JOINT
NO SCALE

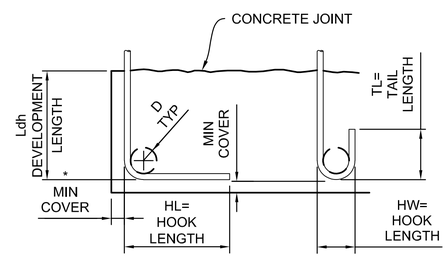

90 DEG STD HOOK **180 DEG STD HOOK**

BAR SIZE GRADE 60	HL	HW	TL	D	f'c=4.5 OR 5.0 KSI Ldh *
#3	6"	3"	3"	2 1/4"	6"
#4	8"	4"	4 1/2"	3"	7"
#5	10"	5"	5"	3 3/4"	9"
#6	1'-0"	6"	6"	4 1/2"	10"
#7	1'-2"	7"	7"	5 1/4"	12"
#8	1'-4"	8"	8"	6"	14"
#9	1'-7"	11 3/4"	10 1/2"	9 1/2"	15"
#10	1'-10"	1'-1 1/4"	11 1/2"	10 3/4"	17"
#11	2'-0"	1'-2 3/4"	1'-1"	12"	19"

* COMPLYING WITH MINIMUM COVER REQUIREMENTS OF ACI 318. OTHERWISE Ldh MUST BE RE-CALCULATED.

LAP SPLICE AND EMDEDMENT LENGTHS
f'c =4.5 ksi fy = 60 ksi
f'c =5.0 ksi

BAR	BARS SPACED GREATER THAN 4"	BARS SPACED LESS THAN OR EQUAL TO 4"
#3	14"	20"
#4	19"	32"
#5	29"	46"
#6	39"	62"
#7	55"	87"
#8	69"	107"
#9	76"	116"
#10	97"	140"
#11	120"	146"

NOTES:

1. PROVIDE MINIMUM LAP SPLICE LENGTHS AND EMBEDMENTS PER TABLE UNLESS NOTED OTHERWISE. EMBEDMENT LENGTH EQUALS THE LAP SPLICE LENGTH UNLESS OTHERWISE NOTED.
2. BAR SPACING AT LAP SPLICE IS THE MINIMUM CLEAR DISTANCE BETWEEN LAPPED BARS PLUS ONE BAR DIAMETER.
3. ALL SPLICES TO BE CONTACT SPLICES AND WIRED TOGETHER UNLESS OTHERWISE APPROVED BY THE ENGINEER.

4 - REINFORCING HOOK SCHEDULE AND REINFORCING LAP EMBEDMENT
NO SCALE

REGISTERED PROFESSIONAL ENGINEER CERTIFICATE NO. 85509 JUAN CORONADO Date Signed July 1, 2026 ARIZONA U.S.A.

A/E FIRM	DESIGNED:	SUB SHEET NO.	TITLE OF SHEET	DRAWING NO.
PRIME: HDR ENGINEERING, INC. DENVER, CO 80202	J. CORONADO CADD J. CORONADO TECH. REVIEW: T. McINTOSH DATE: JUNE 2026	S500	GENERAL TEMPORARY WWTP STRUCTURAL DETAILS PADS AND REINFORCING NORTH RIM - GRAND CANYON NATIONAL PARK	113 182752A PMIS/PKG NO. 318719 SHEET 27 OF 90

6/11/2026 Lynch, Nicole C:\Users\nlynch\DC\ACCDocs\HDR\10414450_NPS_GRCA_N_Rim_Utility_2026\Project Files\CAD_HDR\DRAWINGS\TEMPORARY WASTEWATER\STRUCTURAL\S500.dwg

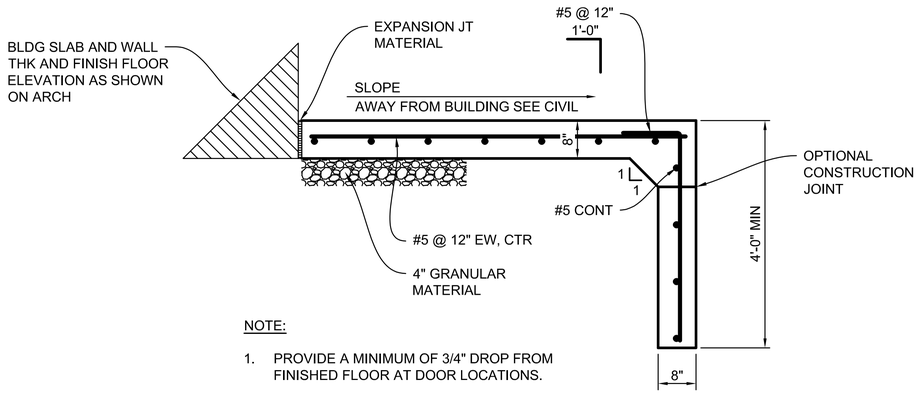

NOTE:

1. PROVIDE A MINIMUM OF 3/4" DROP FROM FINISHED FLOOR AT DOOR LOCATIONS.
2. MAINTAIN TURN DOWN AROUND PERIMETER EXCEPT AT BUILDING INTERFACE.

1 EXTERIOR STOOP SLAB / RAMP

NO SCALE

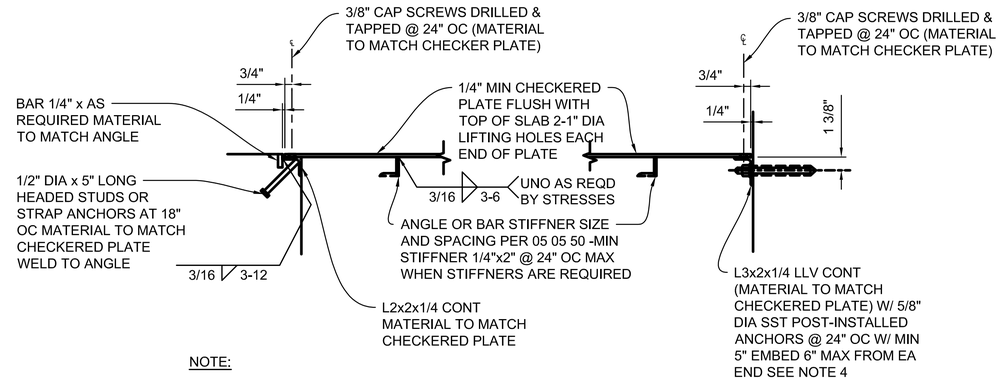

NOTE:

1. CHECKERED PLATE SIZE TO BE DETERMINED BY CONTRACT DOCUMENTS.
2. FIELD DRILL HOLES FOR SCREWS AT CONTRACTORS OPTION.
3. PROVIDE DISSIMILAR MATERIAL PROTECTION FOR ALUMINUM IN CONTACT WITH CONCRETE PER SPECIFICATION.
4. ONLY TO BE USED AT CONTINUOUS WALL ABOVE CHECKERED PLATE OR AT PRE-EXISTING CONCRETE CONSTRUCTION.

2 CHECKERED PLATE AND SUPPORT

NO SCALE

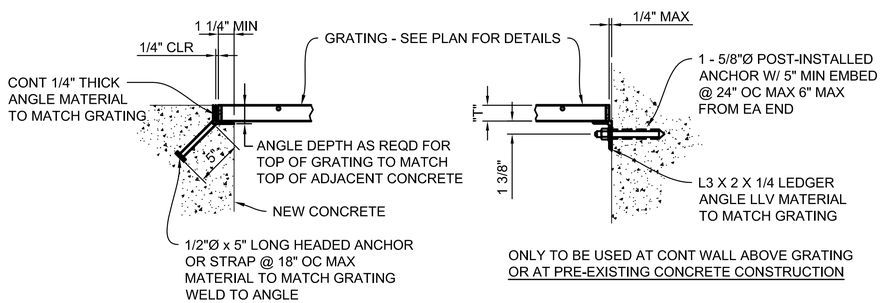

NOTES:

1. GRATING SIZE PER CONTRACT DOCUMENTS.
2. ALL ENDS AND OPENINGS SHALL BE BANDED, SEE SPECIFICATION.
3. ATTACH GRATING TO ALL SUPPORT ANGLES WITH BOLTED CLIPS, SPACED AT 2'-0" MAX CENTERS.
4. PROVIDE DISSIMILAR MATERIAL PROTECTION FOR ALUMINUM IN CONTACT WITH CONCRETE PER SPECIFICATION.

3 GRATING AND SUPPORT

NO SCALE

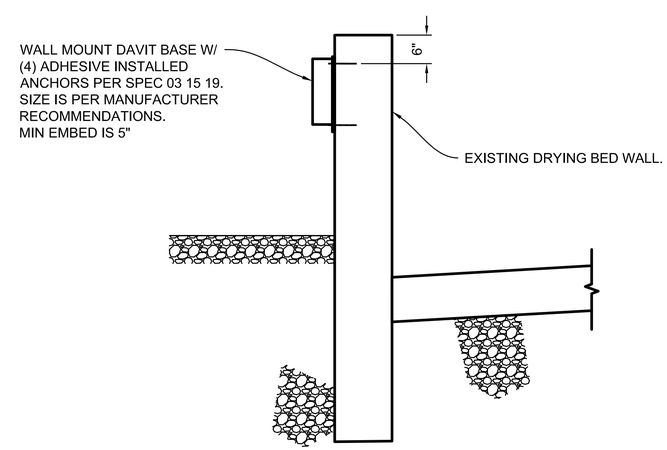

4 DAVIT CRANE BASE ANCHORAGE

NO SCALE

REGISTERED PROFESSIONAL ENGINEER CERTIFICATE NO. 85509 JUAN CARLOS CORONADO Date Signed 6/11/2026 ARIZONA U.S.A.

A/E FIRM	DESIGNED:	SUB SHEET NO.	TITLE OF SHEET	DRAWING NO.
PRIME: HDR ENGINEERING, INC. DENVER, CO 80202	J. CORONADO CADD J. CORONADO TECH. REVIEW: T. McINTOSH DATE: JUNE 2026	S501	GENERAL TEMPORARY WWTP STRUCTURAL DETAILS NOTES NORTH RIM - GRAND CANYON NATIONAL PARK	113 182752A PMIS/PKG NO. 318719 SHEET 28 OF 90

6/11/2026 Lynch, Nicole C:\Users\nlynch\DC\ACCDocs\HDR\10414450_NPS_GRCA_N_Rim_Utility_2026\Project Files\CAD_HDR\DRAWINGS\TEMPORARY WASTEWATER\STRUCTURAL\S501.dwg

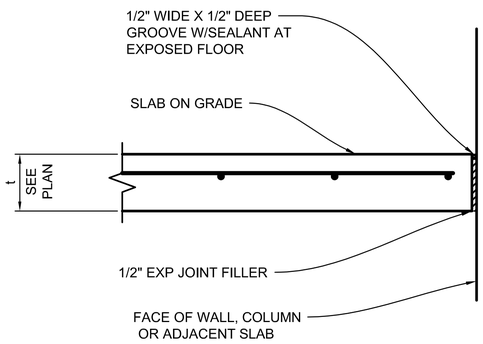

1 ISOLATION JOINT AT SLAB ON GRADE

NO SCALE

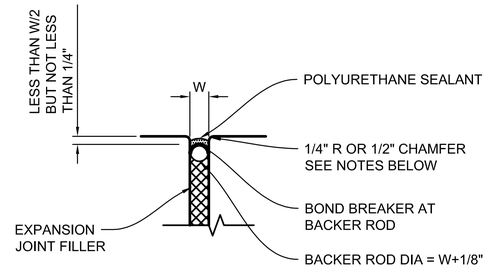

DETAIL "A" EXPOSED FACE

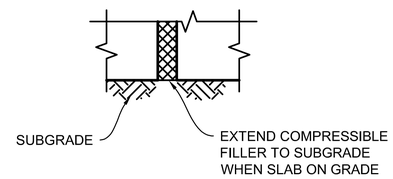

DETAIL "B" SOIL SIDE

NOTES:

1. FOR WALLS, FORM ALL JOINT EDGES AT 1/2" CHAMFER.
2. FOR UNDER SIDE OF EXPOSED SLABS, FORM JOINT EDGES AT 1/2" CHAMFER.
3. FOR SLABS, PROVIDE 1/4" RADIUS TOOLED EDGES AT TOP SURFACE.
4. USE DETAIL "B" AT UNDERSIDE OF SLABS ON GRADE ONLY. USE DETAIL "A" AT ALL OTHER LOCATIONS.
5. "W" = 1" WIDE UNLESS OTHERWISE INDICATED ON THE DRAWINGS.

2 SEALANT DETAIL

NO SCALE

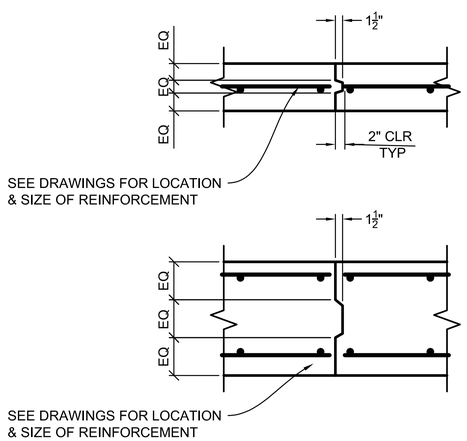

3 CONTROL JOINT

NO SCALE

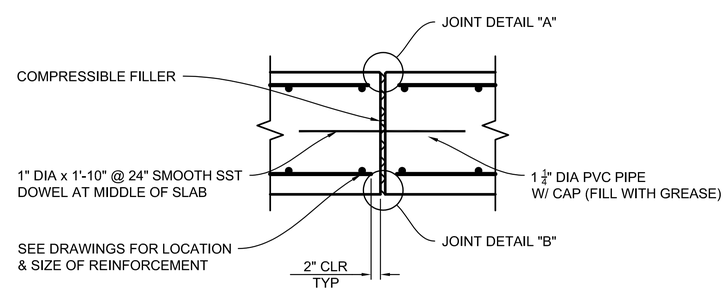

NOTES:

1. SMOOTH DOWEL AND PVC ASSEMBLY AT EXPANSION JOINTS SHALL USE SIKA "SPEED DOWEL" OR EQUIVALENT.
2. LOCATE EXPANSION JOINTS AT EVERY THIRD JOINT SHOWN ON PLAN.
3. EXTEND EXPANSION JOINT THROUGH SLAB TURN DOWNS.

4 EXPANSION JOINT WITH SEALANT

NO SCALE

REGISTERED PROFESSIONAL ENGINEER CERTIFICATE NO. 85509 JUAN CORONADO Date Signed July 1, 2026 ARIZONA U.S.A.

A/E FIRM	DESIGNED:	SUB SHEET NO.	TITLE OF SHEET	DRAWING NO.
PRIME: HDR ENGINEERING, INC. DENVER, CO 80202	J. CORONADO CADD J. CORONADO TECH. REVIEW: T. McINTOSH DATE: JUNE 2026	S502	GENERAL TEMPORARY WWTP STRUCTURAL DETAILS NOTES NORTH RIM - GRAND CANYON NATIONAL PARK	113 182752A PMIS/PKG NO. 318719 SHEET 29 OF 90

6/11/2026 Lynch, Nicole C:\Users\nlynch\DC\ACCDocs\HDR\10414450_NPS_GRCA_N_Rim_Utility_2026\Project Files\CAD_HDR\DRAWINGS\TEMPORARY WASTEWATER\STRUCTURAL\S502.dwg

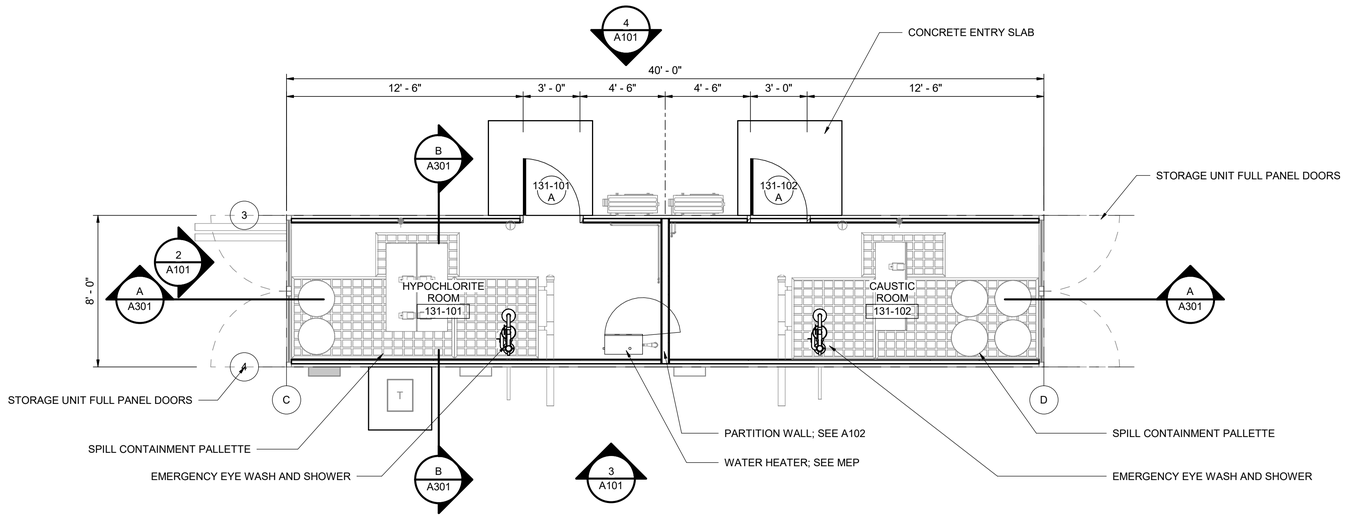

1 A101 CHEMICAL STORAGE CONTAINER 1
SCALE (A)

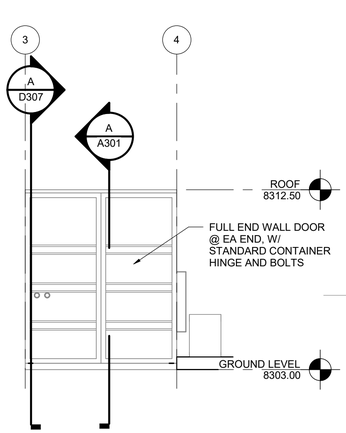

2 A101 WEST ELEVATION (EAST SIM)
SCALE (A)

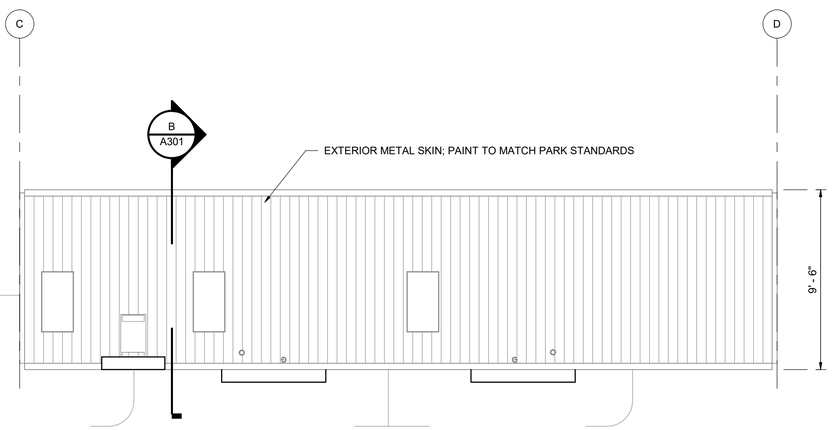

3 A101 SOUTH ELEVATION
SCALE (A)

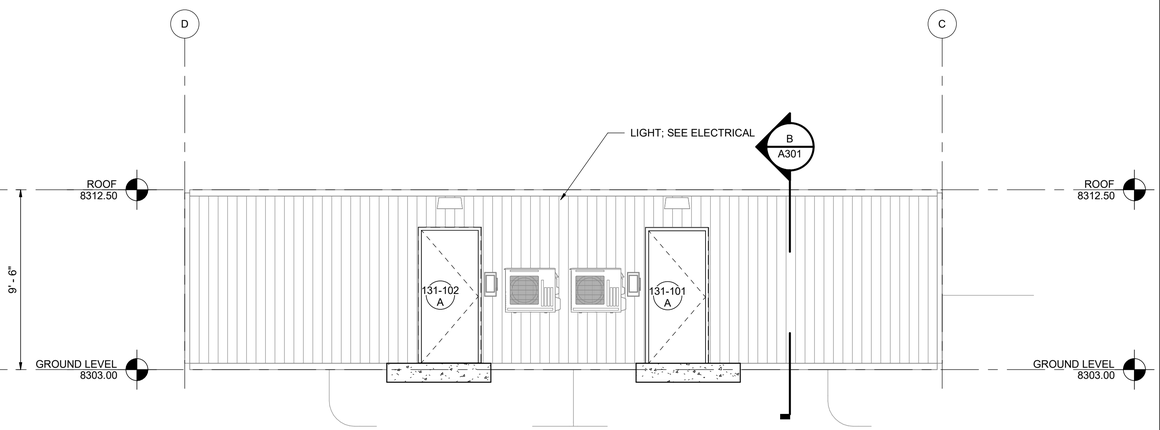

4 A101 NORTH ELEVATION
SCALE (A)

STORAGE AND SHIPPING CONTAINER NOTES

A. PROVIDE 40' HIGH CUBE, HARD-TOP CONTAINER UNIT W/ FULL HEIGHT DOUBLE DOOR AT EACH END. 40'Lx8'Wx9'-6"T CLEAR DIMENSIONS.

B. UNIT WILL BE REFURBISHED SINGLE-USE CONTAINER. THE UNIT SHALL BE CLEANED AND REPAIRED AS REQUIRED INCLUDING REMOVAL OF ANY CONTAMINANTS, RUST, ETC, READY FOR NEW COATING TO PARK STANDARD FLAT FOREST GREEN SELECTION. DAMAGED UNITS, INCLUDING LARGE DENTS, HOLES, BROKEN DOORS, HINGES, OR SIMILAR WILL NOT BE ACCEPTED.

C. UNIT SHALL COMPLY WITH THE INDUSTRY STANDARD FOR SHIPPING CONTAINERS REQUIREMENTS, INCLUDING BUT NOT LIMITED TO CSC CERTIFICATION AS DEFINED BY THE INTERNATIONAL MARITIME ORGANIZATION. THE UNIT MUST CARRY A CSC SAFETY APPROVAL PLATE ISSUED BY A QUALIFIED SURVEYOR.

D. PROVIDE PERSONNEL DOOR AS SHOWN WITH PANIC EGRESS HARDWARE FOR EGRESS.

E. MANUFACTURER - BASIS OF DESIGN CHS CONTAINER GROUP (chs-containergroup.com/us/)

F. UNITS WILL BE FULLY SEALED, WIND AND WATERTIGHT, SHIPPED READY FOR INSTALLATION AND OCCUPANCY

G. UNIT WILL BE INTERNALLY INSULATED WITH INSULATING MATERIALS COMPLIANT WITH THE APPLICABLE BUILDING CODES INCLUDING FLAME SPREAD SAFETY, SMOKE DEVELOPMENT CRITERIA, AND ENERGY CODE. THE UNITS ARE ASSUMED TO BE PARTIALLY OCCUPIED AND WILL COMPLY WITH ALL APPLICABLE CODES.

H. INTERIOR WILL BE FITTED WITH FRP CHEMICAL RESISTANT PANELS OVER WATER RESISTANT SUBSTRATE ON METAL FURRING W/ INSULATION. INSTALL HIGH TRAFFIC, ROLLED OR FLUID APPLIED CHEMICAL RESISTANT FLOORING.

I. DOOR AND HARDWARE:
   a. DOORS AND FRAME SHALL BE HEAVY DUTY HOLLOW METAL WITH FACTORY PRIMED COATING AND FIELD COATED TO MATCH ADJACENT WALLS.
   b. DOORS SHALL BE 3'-0" X 7'-0" STANDARD.
   c. HARDWARE.
      - CLASSROOM FUNCTION PANIC EXIT DEVICE WITH EXTERIOR PULL AND LOCKING CORE PER PARK STANDARD KEYING SYSTEM.
      - OVERHEAD CLOSER
      - (1.5) PR 5 KNUCKLE HINGES
      - WEATHER SEALS
      - THRESHOLD

GENERAL NOTES

A. PROVIDE IN-WALL BLOCKING IN WALLS FOR WALL-MOUNTED ITEMS, INCLUDING CABINETS, SHELVING, TOILET & BATH ACCESSORIES, & SIMILAR ITEMS.

B. ALL ITEMS NOTED ARE NEW UNLESS SPECIFICALLY IDENTIFIED AS NIC OR PROVIDED BY OWNER

C. ALL DIMENSIONS ARE ACTUAL AND ARE TO FACE OF MASONRY, FACE OF METAL STUD, CENTERLINE OF COLUMN OR CENTERLINE OF BEAM UNLESS NOTED OTHERWISE. ALL DIMENSIONS ARE FOR BIDDING PURPOSES ONLY. ACTUAL FIELD DIMENSIONS SHALL BE VERIFIED PRIOR TO SUBMITTAL OF SHOP DRAWINGS, ORDERING RELATED MATERIALS AND PERFORMING DEMOLITION OR CONSTRUCTION WORK. ALL DIMENSIONS ALIGNING WITH OR RELATED TO EXISTING CONDITIONS ARE TO BE LAID OUT PRIOR TO COMMENCING WORK AND VERIFIED.

D. VERIFY MECHANICAL AND ELECTRICAL DRAWINGS FOR SCOPE AND INTERFACE. CONTRACTOR SHALL COORDINATE LOCATION FOR ALL MECHANICAL AND ELECTRICAL ITEMS WITH GENERAL CONSTRUCTION. REVIEW ANY DISCREPANCIES WITH THE CONTRACTING OFFICER PRIOR TO INSTALLATION AND/OR FABRICATION.

E. SEE MECHANICAL DRAWINGS FOR ALL ROOF OR WALL PENETRATIONS WHICH MUST BE FLASHED/ROOFED AROUND.

F. IN SOME INSTANCES, THERMAL AND SOUND BATT INSULATION HAS BEEN OMITTED FROM THE DETAILS FOR CLARITY. SEE SPECIFICATIONS, WALL TYPES & REFLECTED CEILING PLANS FOR LOCATIONS REQUIRING INSULATION.

G. COMPLETELY SEAL ANY PENETRATIONS IN PARTITION WALL WITH CHEMICAL RESISTANT POLYSULFIDE OR POLYURETHANE SEALANT.

FINISH NOTES

A. INTERIOR WALL AND CEILING: APPLY FRP, CHEMICAL RESISTANT WALL PANEL. BASIS OF DESIGN: VALTO, KEMPLY FRP LAMINATED TO GYPSUM OR PLYWOOD, COLOR: GREY, SELECTED FROM MANUFACTURER'S FULL PRODUCT LINE.

B. INTERIOR FLOOR: INDUSTRIAL GRADE ROLLED RUBBER SHEET FLOORING. BASIS OF DESIGN: AMERICAN BILTRITE INDUSTRIAL RUBBER - ETHYLENE PROPYLENE DIENE EPDM AB-553, COLOR SELECTED FROM MFR STANDARDS WITH COVED BASE.

C. COAT THE EXTERIOR OF THE UNIT WITH PARK STANDARD FOREST GREEN.
   BEHR ULTRA
   BASE: 9853
   BEHR ULTRA EXT MATTE FINISH
   CUSTOM COLOR MATCH

CLRNT	BL	CL	DL	KXL
0Z	16	14	32	6
384th	316	324	72	11

SCALE (A) 4 0 4 8 1/4" = 1'-0"
SCALE OF FEET

LICENSED ARCHITECT CERTIFICATE NO. 85783 RICHARD MCKINLEY DATE SIGNED 06/05/26 ARIZONA U.S.A.

A/E FIRM	DESIGNED:	SUB SHEET NO.	TITLE OF SHEET	DRAWING NO.
PRIME: HDR ENGINEERING, INC. DENVER, CO 80202	R. McKINLEY	A101	CHEMICAL CONTAINER ARCHITECTURAL PLAN AND ELEVATIONS	113 / 182752A
	DADP: D. SPERRY			PMIS/PKG NO. 318719
	TECH. REVIEW: R. McKINLEY			SHEET 30 OF 90
	DATE: JUNE 2026		NORTH RIM - GRAND CANYON NATIONAL PARK	

Autodesk Docs://10414450_NPS_GRCA_N_Rim_Utility_2026/10414450_131_CHEM CONTAINER_U.rvt
6/5/2026 3:25:07 PM

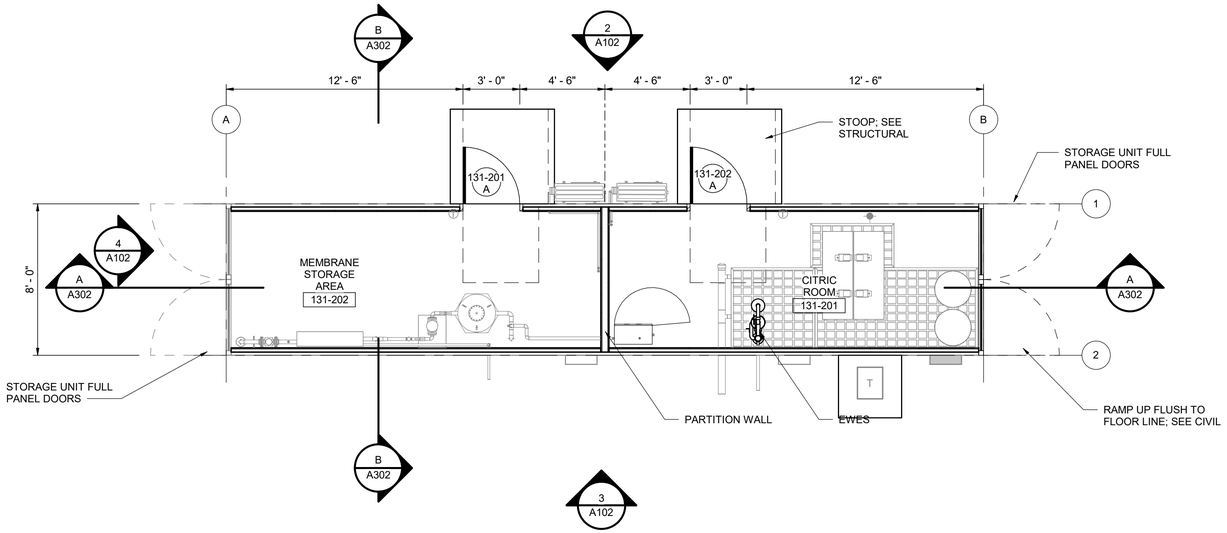

1 A102 CHEMICAL STORAGE CONTAINER 2 PLAN
SCALE (A)

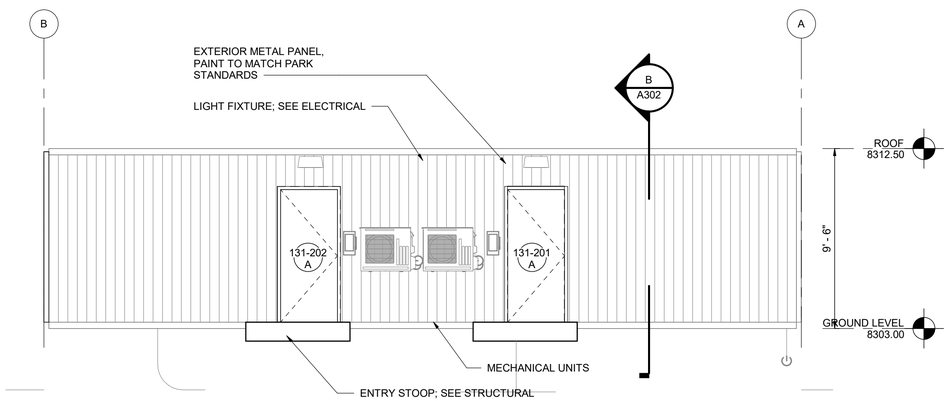

2 A102 NORTH EXTERIOR ELEVATION
SCALE (A)

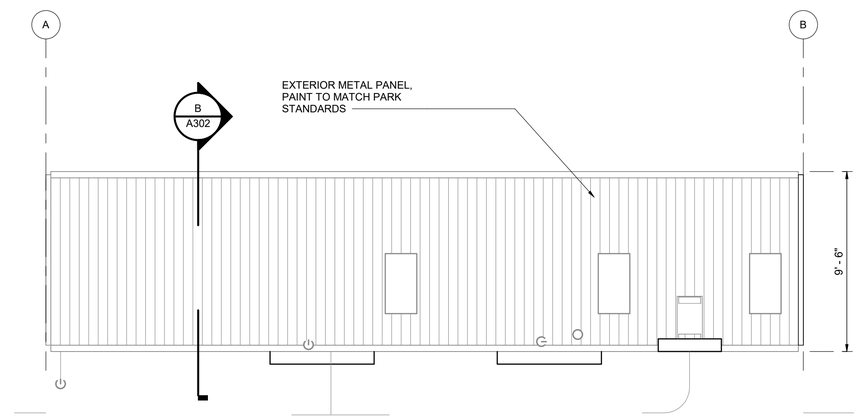

3 A102 SOUTH EXTERIOR ELEVATION
SCALE (A)

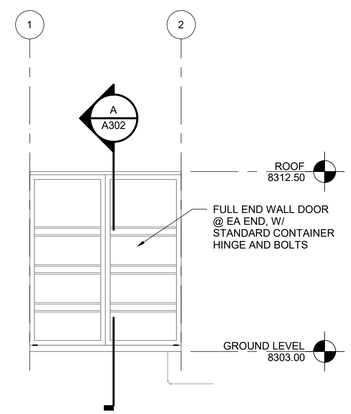

4 A102 WEST ELEVATION (EAST SIM)
SCALE (A)

STORAGE AND SHIPPING CONTAINER NOTES

A. PROVIDE 40' HIGH CUBE, HARD-TOP CONTAINER UNIT W/ FULL HEIGHT DOUBLE DOOR AT EACH END. 40'Lx8'Wx9'-6"T CLEAR DIMENSIONS.

B. UNIT WILL BE REFURBISHED SINGLE-USE CONTAINER. THE UNIT SHALL BE CLEANED AND REPAIRED AS REQUIRED INCLUDING REMOVAL OF ANY CONTAMINANTS, RUST, ETC, READY FOR NEW COATING TO PARK STANDARD FLAT FOREST GREEN SELECTION. DAMAGED UNITS, INCLUDING LARGE DENTS, HOLES, BROKEN DOORS, HINGES, OR SIMILAR WILL NOT BE ACCEPTED.

C. UNIT SHALL COMPLY WITH THE INDUSTRY STANDARD FOR SHIPPING CONTAINERS REQUIREMENTS, INCLUDING BUT NOT LIMITED TO CSC CERTIFICATION AS DEFINED BY THE INTERNATIONAL MARITIME ORGANIZATION. THE UNIT MUST CARRY A CSC SAFETY APPROVAL PLATE ISSUED BY A QUALIFIED SURVEYOR.

D. PROVIDE PERSONNEL DOOR AS SHOWN WITH PANIC EGRESS HARDWARE FOR EGRESS.

E. MANUFACTURER - BASIS OF DESIGN CHS CONTAINER GROUP (chs-containergroup.com/us/)

F. UNITS WILL BE FULLY SEALED, WIND AND WATERTIGHT, SHIPPED READY FOR INSTALLATION AND OCCUPANCY

G. UNIT WILL BE INTERNALLY INSULATED WITH INSULATING MATERIALS COMPLIANT WITH THE APPLICABLE BUILDING CODES INCLUDING FLAME SPREAD SAFETY, SMOKE DEVELOPMENT CRITERIA, AND ENERGY CODE. THE UNITS ARE ASSUMED TO BE PARTIALLY OCCUPIED AND WILL COMPLY WITH ALL APPLICABLE CODES.

H. INTERIOR WILL BE FITTED WITH FRP CHEMICAL RESISTANT PANELS OVER WATER RESISTANT SUBSTRATE ON METAL FURRING W/ INSULATION. INSTALL HIGH TRAFFIC, ROLLED OR FLUID APPLIED CHEMICAL RESISTANT FLOORING.

I. DOOR AND HARDWARE:
   a. DOORS AND FRAME SHALL BE HEAVY DUTY HOLLOW METAL WITH FACTORY PRIMED COATING AND FIELD COATED TO MATCH ADJACENT WALLS.
   b. DOORS SHALL BE 3'-0" X 7'-0" STANDARD.
   c. HARDWARE.
      - CLASSROOM FUNCTION PANIC EXIT DEVICE WITH EXTERIOR PULL AND LOCKING CORE PER PARK STANDARD KEYING SYSTEM.
      - OVERHEAD CLOSER
      - (1.5) PR 5 KNUCKLE HINGES
      - WEATHER SEALS
      - THRESHOLD

GENERAL NOTES

A. PROVIDE IN-WALL BLOCKING IN WALLS FOR WALL-MOUNTED ITEMS, INCLUDING CABINETS, SHELVING, TOILET & BATH ACCESSORIES, & SIMILAR ITEMS.

B. ALL ITEMS NOTED ARE NEW UNLESS SPECIFICALLY IDENTIFIED AS NIC OR PROVIDED BY OWNER

C. ALL DIMENSIONS ARE ACTUAL AND ARE TO FACE OF MASONRY, FACE OF METAL STUD, CENTERLINE OF COLUMN OR CENTERLINE OF BEAM UNLESS NOTED OTHERWISE. ALL DIMENSIONS ARE FOR BIDDING PURPOSES ONLY. ACTUAL FIELD DIMENSIONS SHALL BE VERIFIED PRIOR TO SUBMITTAL OF SHOP DRAWINGS, ORDERING RELATED MATERIALS AND PERFORMING DEMOLITION OR CONSTRUCTION WORK. ALL DIMENSIONS ALIGNING WITH OR RELATED TO EXISTING CONDITIONS ARE TO BE LAID OUT PRIOR TO COMMENCING WORK AND VERIFIED.

D. VERIFY MECHANICAL AND ELECTRICAL DRAWINGS FOR SCOPE AND INTERFACE. CONTRACTOR SHALL COORDINATE LOCATION FOR ALL MECHANICAL AND ELECTRICAL ITEMS WITH GENERAL CONSTRUCTION. REVIEW ANY DISCREPANCIES WITH THE CONTRACTING OFFICER PRIOR TO INSTALLATION AND/OR FABRICATION.

E. SEE MECHANICAL DRAWINGS FOR ALL ROOF OR WALL PENETRATIONS WHICH MUST BE FLASHED/ROOFED AROUND.

F. IN SOME INSTANCES, THERMAL AND SOUND BATT INSULATION HAS BEEN OMITTED FROM THE DETAILS FOR CLARITY. SEE SPECIFICATIONS, WALL TYPES & REFLECTED CEILING PLANS FOR LOCATIONS REQUIRING INSULATION.

G. COMPLETELY SEAL ANY PENETRATIONS IN PARTITION WALL WITH CHEMICAL RESISTANT POLYSULFIDE OR POLYURETHANE SEALANT.

H. ALL NPS ACCESSIBLE REQUIREMENTS APPLY UP TO THE POINT OF ACCESS INTO THE SPACE.

FINISH NOTES

A. INTERIOR WALL AND CEILING: APPLY FRP, CHEMICAL RESISTANT WALL PANEL. BASIS OF DESIGN: VALTO, KEMPLY FRP LAMINATED TO GYPSUM OR PLYWOOD, COLOR: GREY, SELECTED FROM MANUFACTURER'S FULL PRODUCT LINE.

B. INTERIOR FLOOR: INDUSTRIAL GRADE ROLLED RUBBER SHEET FLOORING. BASIS OF DESIGN: AMERICAN BILTRITE INDUSTRIAL RUBBER - ETHYLENE PROPYLENE DIENE EPDM AB-553, COLOR SELECTED FROM MFR STANDARDS WITH COVED BASE.

C. COAT THE EXTERIOR OF THE UNIT WITH PARK STANDARD FOREST GREEN.
   BEHR ULTRA
   BASE: 9853
   BEHR ULTRA EXT MATTE FINISH
   CUSTOM COLOR MATCH

CLRNT	BL	CL	DL	KXL
0Z	16	14	32	6
384th	316	324	72	11

SCALE (A) 4 0 4 8 1/4" = 1'-0"
SCALE OF FEET

LICENSED ARCHITECT CERTIFICATE NO. 85788 RICHARD MCKINLEY DATE SIGNED ARIZONA U.S.A.

A/E FIRM	DESIGNED:	SUB SHEET NO.	TITLE OF SHEET	DRAWING NO.
PRIME: HDR ENGINEERING, INC. DENVER, CO 80202	R. McKINLEY	A102	CHEMICAL AND STORAGE CONTAINER ARCHITECTURAL PLAN AND ELEVATIONS	113 182752A
	D. SPERRY			PMIS/PKG NO. 318719
	TECH. REVIEW: R. McKINLEY			SHEET 31 OF 90
	DATE: JUNE 2026		NORTH RIM - GRAND CANYON NATIONAL PARK	

Autodesk Docs://10414450_NPS_GRCA_N_Rim_Utility_2026/10414450_131_CHEM AND STORAGE CONTAINER_U.rvt
6/5/2026 3:20:43 PM

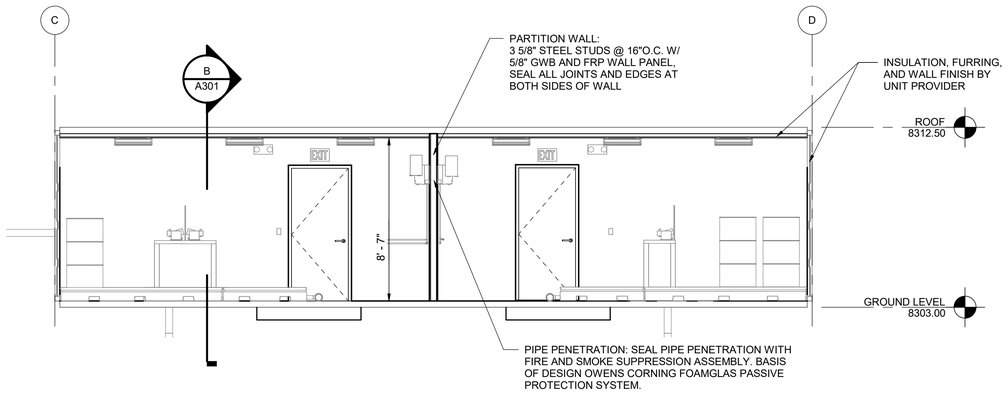

A / A301 BUILDING SECTION
SCALE A

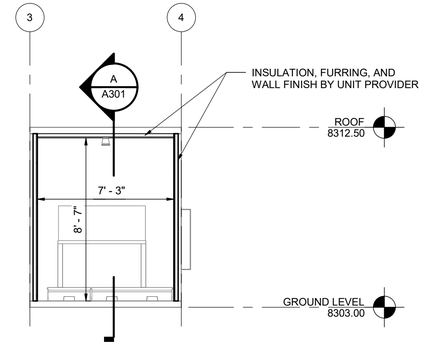

B / A301 BUILDING SECTION
SCALE A

N

SCALE A 4 0 4 8 1/4" = 1'-0"
SCALE OF FEET

LICENSED ARCHITECT
CERTIFICATE NO.
85788
RICHARD
MCKINLEY
DATE SIGNED
ARIZONA U.S.A.

A/E FIRM PRIME: HDR ENGINEERING, INC. DENVER, CO 80202	DESIGNED: R. McKINLEY DRAWN: D. SPERRY TECH. REVIEW: R. McKINLEY DATE: JUNE 2026	SUB SHEET NO. A301	TITLE OF SHEET CHEMICAL CONTAINER ARCHITECTURAL SECTIONS AND DETAILS NORTH RIM - GRAND CANYON NATIONAL PARK

DRAWING NO. 113 / 182752A
PMIS/PKG NO. 318719
SHEET 32 OF 90

Autodesk Docs://10414450_NPS_GRCA_N_Rim_Utility_2026/10414450_131_CHEM CONTAINER_U.rvt
4/23/2026 2:29:24 PM

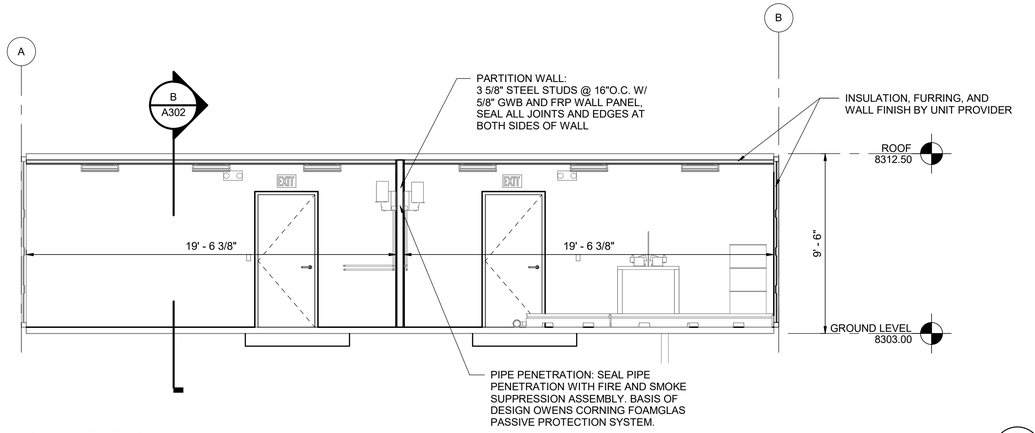

A
A302
BUILDING SECTION
SCALE A

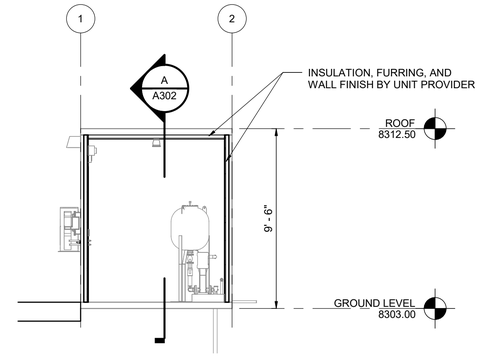

B
A302
BUILDING SECTION
SCALE A

SCALE A 4 0 4 8 1/4" = 1'-0"
SCALE OF FEET

LICENSED ARCHITECT
CERTIFICATE NO.
85788
RICHARD
MCKINLEY
DATE SIGNED
ARIZONA U.S.A.

A/E FIRM	DESIGNED:	SUB SHEET NO.	TITLE OF SHEET	DRAWING NO.
PRIME: HDR ENGINEERING, INC. DENVER, CO 80202	R. McKINLEY CADD D. SPERRY TECH. REVIEW: R. McKINLEY DATE: JUNE 2026	A302	ARCHITECTURAL SECTIONS AND DETAILS NORTH RIM - GRAND CANYON NATIONAL PARK	113 182752A PMIS/PKG NO. 318719 SHEET 33 OF 90

Autodesk Docs://10414450_NPS_GRCA_N_Rim_Utility_2026/10414450_131_CHEM AND STORAGE CONTAINER_U.rvt
4/23/2026 2:26:17 PM

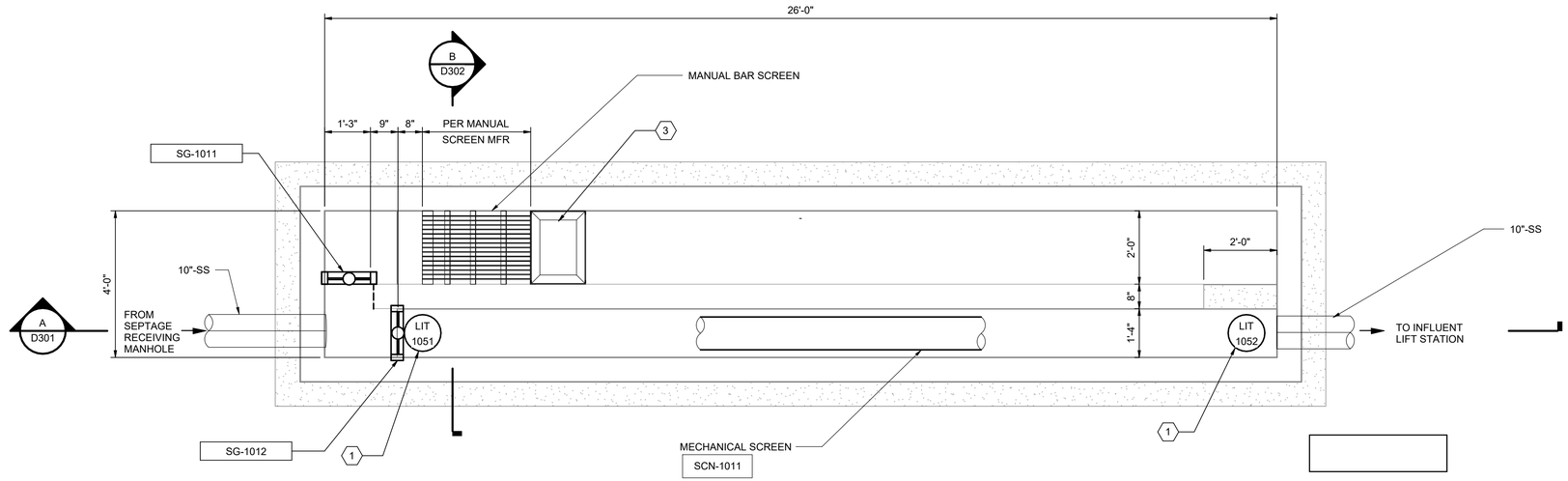

1 D101 MECHANICAL SCREEN CHANNEL - LOWER PLAN
SCALE (A)

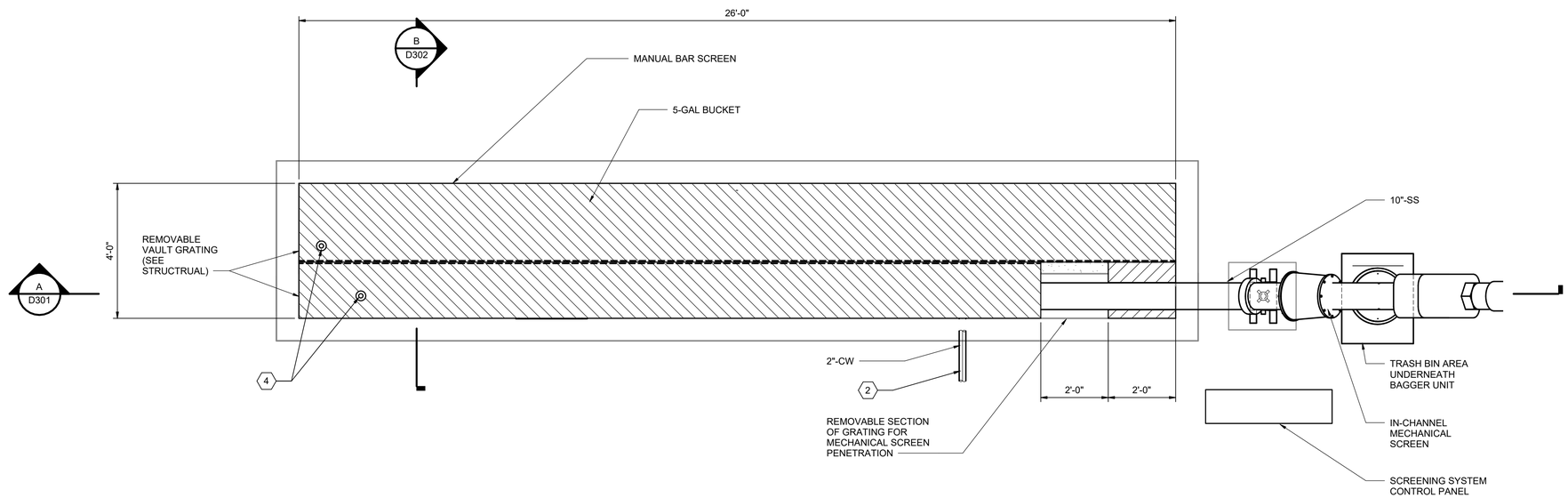

2 D101 MECHANICAL SCREEN CHANNEL - UPPER PLAN
SCALE (A)

GENERAL NOTES

A. FOR PIPE PENETRATION DETAILS SEE SHEET D501.

B. ALL PIPE SUPPORT MATERIALS ARE 316 OR 316L.

KEYNOTES (X)

1. INSTALL MECHANICAL SCREEN UPSTREAM AND DOWNSTREAM LEVEL INDICATORS AT HEIGHT AND LOCATION PER MANUFACTURER INSTRUCTIONS .
2. WATER SOURCE CONNECTION TO SCREEN. COORDINATE REQUIREMENTS WITH MECHANICAL SCREEN MANUFACTURER . FIELD-ROUTE WATER SUPPLY TO MECHANICAL SCREEN PER SCREEN MFR INSTRUCTIONS AND HOSE RECOMMENDATIONS.
3. REMOVABLE MANUAL SCREEN DRYING DECK W/ LIFTING CABLES
4. GRATING CUT OUTS FOR GATE STEMS AND OPERATORS. COORDINATE SIZE AND LOCATION WITH GATE MFR.

SCALE (A) 2 0 2 4 1/2" = 1'-0"
SCALE OF FEET

Registered Professional Engineer (Civil) CERTIFICATE NO. 85332 CHRIS CARPENTER DATE SIGNED 4/27/26 ARIZONA U.S.A.

A/E FIRM	DESIGNED:	SUB SHEET NO.	TITLE OF SHEET	DRAWING NO.
PRIME: HDR ENGINEERING, INC. DENVER, CO 80202	P. HAYNES	D101	MULTIPLE STRUCTURE NAME INFLUENT SCREENING VAULT - LOWER PLAN	113 182752A
	CADD C. CONFER			PMIS/PKG NO. 318719
	TECH. REVIEW: D. ZINCHENKO			SHEET 34 OF 90
	DATE: JUNE 2026		NORTH RIM - GRAND CANYON NATIONAL PARK	

Autodesk Docs://10414450_NPS_GRCA_N_Rim_Utility_2026/10414450_131_MECH SCREEN_U.rvt
4/27/2026 11:40:24 AM

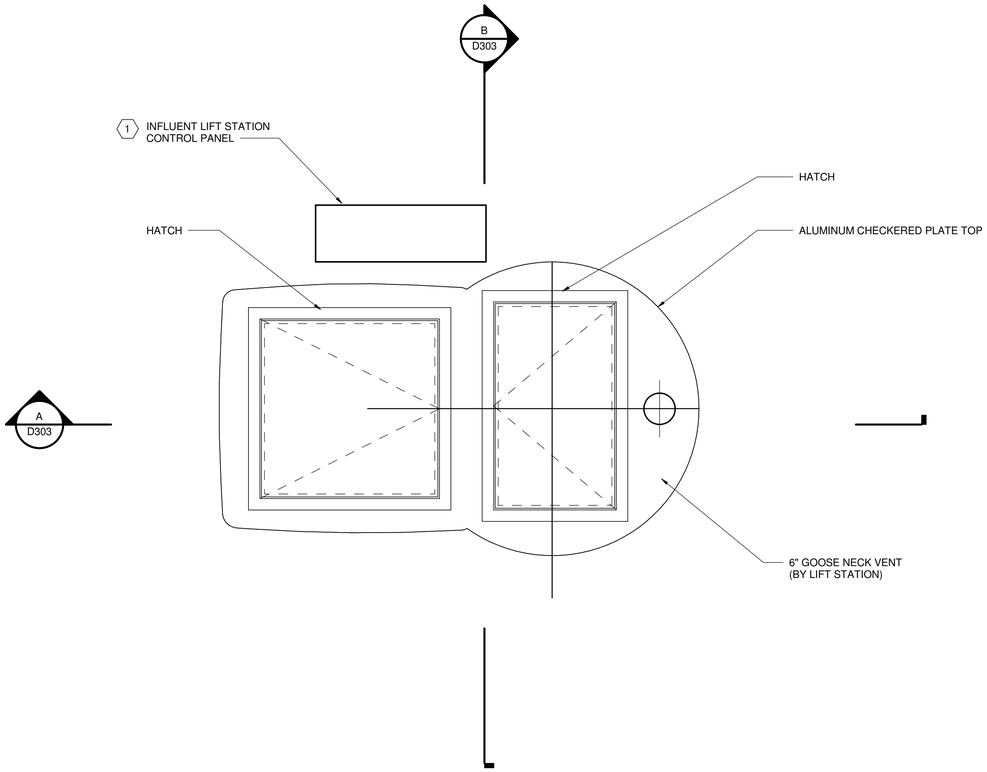

A D102 INFLUENT LIFT STATION PLAN - UPPER
SCALE A

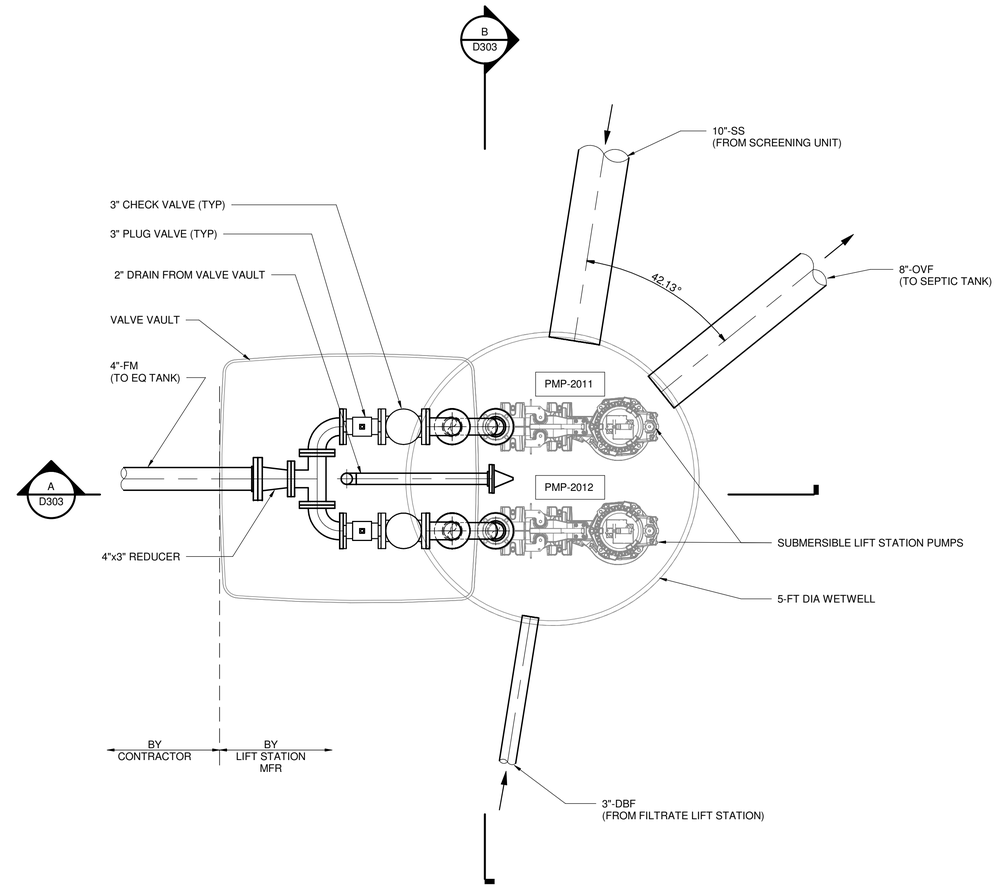

B D303 INFLUENT LIFT STATION PLAN - LOWER
SCALE A

GENERAL NOTES

A. COORDINATE WITH SITE UTILITY LAYOUTS AND FIELD VERIFY ALL ANGLES PRIOR TO LIFT STATION PROCUREMENT.

B. TRIPOD CRANE TO BE MOUNTED TO CONCRETE PAD.

KEYNOTES X

1. INTERIOR OF LIFT STATION WETWELL IS A CLASS I, DIVISION 1 HAZARDOUS AREA PER NFPA 820. A CLASS I, DIVISION 2 HAZARDOUS AREA EXTENDS 5FT BEYOND ANY OPENING IN THE LIFT STATION, INCLUDING HATCHES AND VENTS. INSTALL LIFT STATION IN A NON-HAZARDOUS AREA, MINIMUM 6FT FROM THE LIFT STATION. INSTALL CONDUIT SEAL FITTINGS BETWEEN THE LIFT STATION CONTROL PANEL AND THE WETWELL TO PREVENT MOVEMENT OF HAZARDOUS GASES. CONFIRM MATERIALS AND INSTALLATION MEETS REQUIREMENTS FOR CLASS I, DIVISION 1 LOCATIONS PER NEC AND NFPA 820.

SCALE A 1 0 1 2 3 3/4" = 1'-0"
SCALE OF FEET

Registered Professional Engineer (Civil) CERTIFICATE NO. 85332 CHRIS CARPENTER DATE SIGNED 6/10/26 ARIZONA U.S.A.

A/E FIRM	DESIGNED:	SUB SHEET NO.	TITLE OF SHEET	DRAWING NO.
PRIME: HDR ENGINEERING, INC. DENVER, CO 80202	P. HAYNES	D102	MULTIPLE STRUCTURE NAME INFLUENT LIFT STATION - PLANS	113 182752A
	CADD C. CONFER			PMIS/PKG NO. 318719
	TECH. REVIEW: D. ZINCHENKO			SHEET 35 OF 90
	DATE: JUNE 2026		NORTH RIM - GRAND CANYON NATIONAL PARK	

Autodesk Docs://10414450_NPS_GRCA_N_Rim_Utility_2026/10414450_131_LIFT STATION_U.rvt
6/10/2026 2:20:52 PM

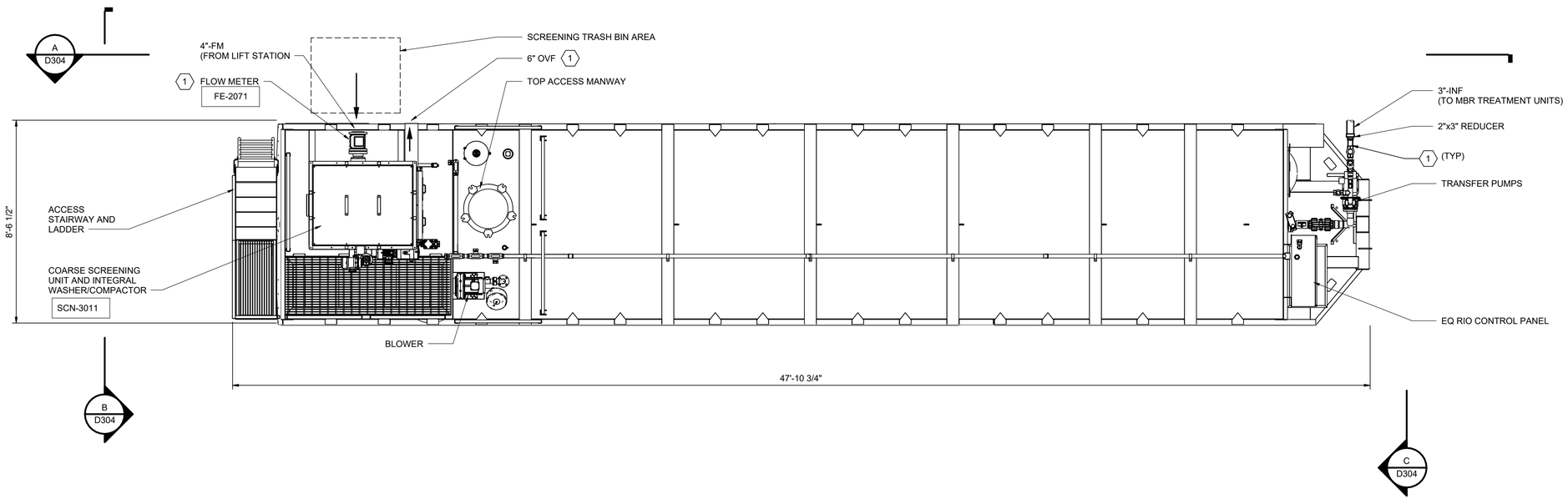

1 D103 EQUALIZATION TANK SYSTEM - PLAN

SCALE A

GENERAL NOTES

1. EQ TANK TO BE LOCATED ON TOP OF 82' X 12.5' CONCRETE PAD NEXT TO UV DISINFECTION SYSTEM. SEE SHEET S500 FOR PAD DETAILS.
2. CONTRACTOR MUST VERIFY PROCESS CONNECTION, SIZE, TYPE, LOCATION, AND RELATIVE ELEVATION ON EACH UNIT WITH MANUFACTURER WITH PIPE PENETRATION INSTALLATION IN THE SLAB. ATTACH PROCESS PIPE TO UNIT AT EACH PROCESS CONNECTION THROUGH THREADED OR FLANGED RUBBER FLEXIBLE COUPLING ADAPTER. PROCESS SERIES 260R OR EQUAL.
3. ALL CONTRACTOR EXPOSED PIPING TO BE PVC SCH 80, PAINTED AND/OR INSULATED IN ACCORDANCE WITH 09 96 00 AND 40 05 00

KEYNOTES X

1. SEE SHEET C506 FOR UNDERSLAB PIPE PENETRATION DETAIL

SCALE A 2 0 2 4 6 3/8" = 1'-0"
SCALE OF FEET

Registered Professional Engineer (Civil) CERTIFICATE NO. 85332 CHRIS CARPENTER Date Signed 6/26/26 ARIZONA U.S.A.

A/E FIRM	DESIGNED:	SUB SHEET NO.	TITLE OF SHEET	DRAWING NO.
PRIME: HDR ENGINEERING, INC. DENVER, CO 80202	P. HAYNES	D103	MULTIPLE STRUCTURE NAME EQUALIZATION TANK - PLAN	113 182752A
	CADD C. CONFER			PMIS/PKG NO. 318719
	TECH. REVIEW: D. ZINCHENKO			SHEET
	DATE: JUNE 2026		NORTH RIM - GRAND CANYON NATIONAL PARK	36 OF 90

Autodesk Docs://10414450_NPS_GRCA_N_Rim_Utility_2026/10414450_131_EQ TANK_U.rvt
4/23/2026 10:58:12 AM

GENERAL NOTES

A. RELATIVE DIMENSIONS, CONNECTIONS, AND ARRANGEMENT APPLY TO ALL MOBILE MBR TREATMENT UNITS.

B. COORDINATE NOZZLE LOCATIONS, ALL DIMENSIONS, AND WEIGHTS WITH MBR TREATMENT UNIT MFR.

C. TYPICAL FOR 2 UNITS.

D. CONTRACTOR MUST MUST VERIFY PROCESS CONNECTION, SIZE, TYPE, LOCATION, AND RELATIVE ELEVATION ON EACH UNIT WITH MANUFACTURER WITH PIPE PENETRATION INSTALLATION IN THE SLAB. ATTACH PROCESS PIPE TO UNIT AT EACH PROCESS CONNECTION THROUGH THREADED OR FLANGED RUBBER FLEXIBLE COUPLING ADAPTER. PROCO SERIES 260R OR EQUAL.

E. ALL CONTRACTOR EXPOSED PIPING TO BE PVC SCH 80, PAINTED AND/OR INSULATED IN ACCORDANCE WITH 09 96 00 AND 40 05 00

F. MBR UNITS TO BE LOCATED ON TOP OF 80' X 24' CONCRETE PAD. SEE SHEET S500 FOR PAD DETAILS.

KEYNOTES (X)

1. CARBON CHEMICALS IN 55-GAL DRUM AND SINGLE-DRUM SPILL CONTAINMENT PALLET PROVIDED BY CONTRACTOR
2. SEE SHEET C506 FOR PULL BOX DETAIL
3. SEE SHEET C506 FOR UNDERSLAB PIPE PENETRATION DETAIL

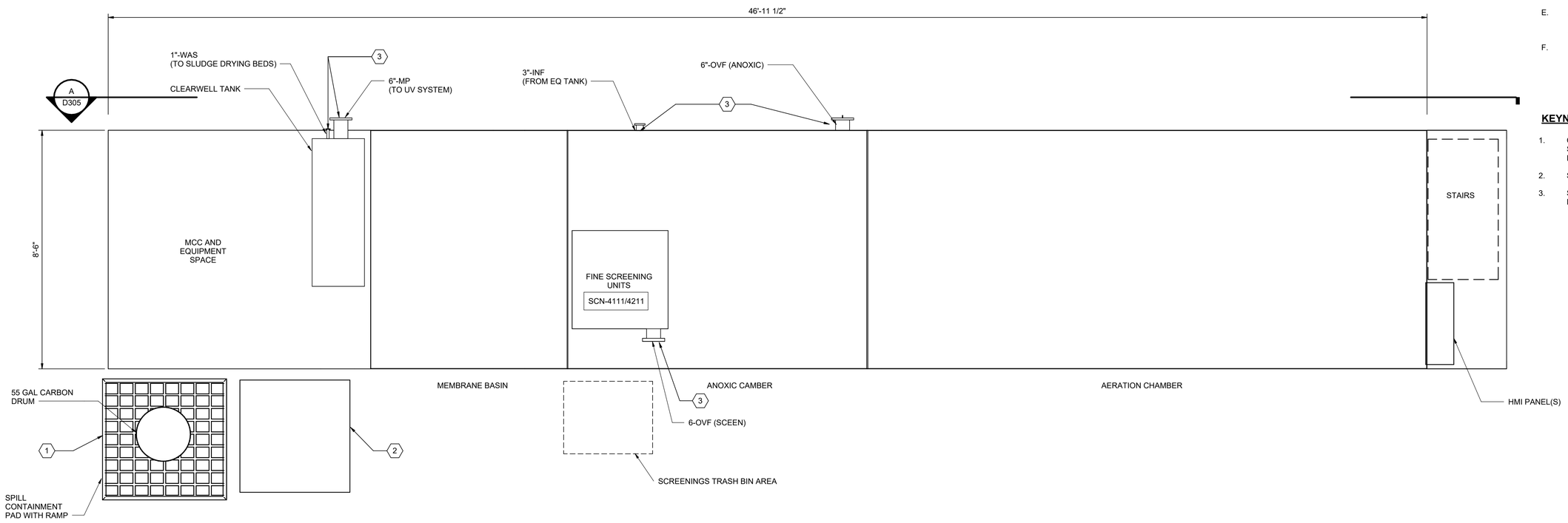

1 / D104 TEMPORARY WASTEWATER TREATMENT UNIT - PLAN
SCALE (A)

SCALE (A) 2 0 2 4 1/2" = 1'-0"
SCALE OF FEET

Registered Professional Engineer (Civil) CERTIFICATE NO. 85332 CHRIS CARPENTER Date Signed 6/23/26 ARIZONA U.S.A.

A/E FIRM	DESIGNED:	SUB SHEET NO.	TITLE OF SHEET	DRAWING NO.
PRIME: HDR ENGINEERING, INC. DENVER, CO 80202	P. HAYNES	D104	MULTIPLE STRUCTURE NAME MBR UNIT - PLAN	113 182752A
	DRAWN: C. CONFER			PMIS/PKG NO. 318719
	TECH. REVIEW: D. ZINCHENKO			SHEET 37 OF 90
	DATE: JUNE 2026		NORTH RIM - GRAND CANYON NATIONAL PARK	

Autodesk Docs://10414450_NPS_GRCA_N_Rim_Utility_2026/10414450_131_TREATMENT UNIT_U.rvt
4/23/2026 11:00:10 AM

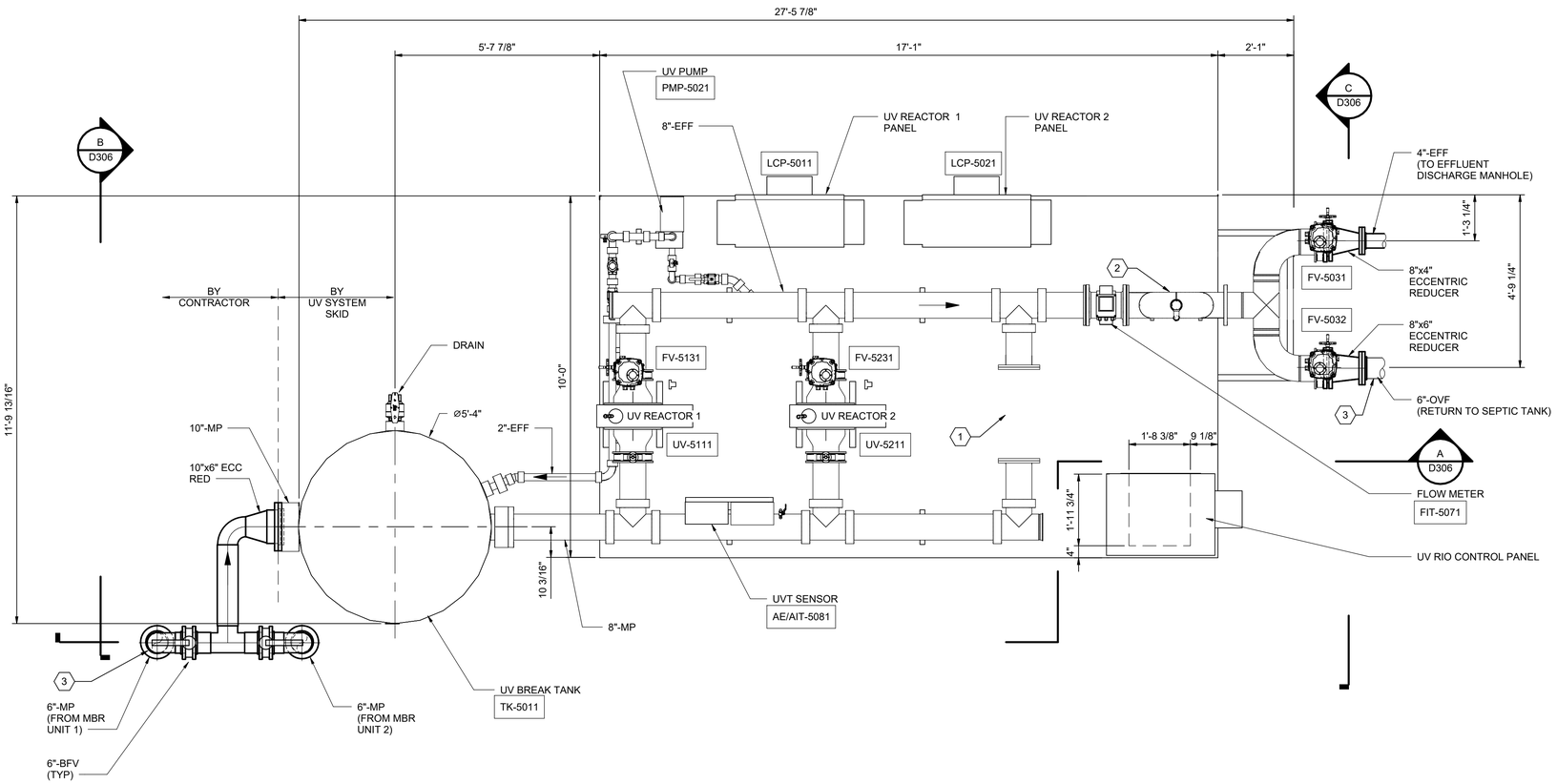

1 D105 UV DISINFECTION UNIT - PLAN
SCALE A

GENERAL NOTES

A. UV DISINFECTION SYSTEM TO BE MOUNTED ON TOP OF 82' X 12.5' CONCRETE PAD NEXT TO EQ TANK. SEE SHEET S500 FOR PAD DETAILS.

B. CONTRACTOR MUST VERIFY PROCESS CONNECTION, SIZE, TYPE, LOCATION, AND RELATIVE ELEVATION ON EACH UNIT WITH MANUFACTURER WITH PIPE PENETRATION INSTALLATION IN THE SLAB.

C. ALL CONTRACTOR EXPOSED PIPING TO BE PVC SCH 80, PAINTED AND/OR INSULATED IN ACCORDANCE WITH 09 96 00 AND 40 05 00

KEYNOTES (X)

1. UV UNIT LAMPS NOT INSTALLED, UNIT LEFT BLANK. BF AT BOTH ENDS OF CONNECTION.
2. LEVEL CONTROL HIGH POINT WITH ANTI-SIPHON ARV. STATIC LOOP COMBINATION AIR-VACUUM RELEASE VALVE.
3. SEE SHEET C506 FOR UNDERSLAB PIPE PENETRATION DETAIL

SCALE A 2 0 2 4 1/2" = 1'-0"
SCALE OF FEET

Registered Professional Engineer (Civil) CERTIFICATE NO. 85332 CHRIS CARPENTER DATE SIGNED 06/26/26 ARIZONA U.S.A.

A/E FIRM	DESIGNED:	SUB SHEET NO.	TITLE OF SHEET	DRAWING NO.
PRIME: HDR ENGINEERING, INC. DENVER, CO 80202	P. HAYNES CADD: C. CONFER TECH. REVIEW: D. ZINCHENKO DATE: JUNE 2026	D105	MULTIPLE STRUCTURE NAME UV DISINFECTION - PLAN NORTH RIM - GRAND CANYON NATIONAL PARK	113 182752A PMIS/PKG NO. 318719 SHEET 38 OF 90

Autodesk Docs://10414450_NPS_GRCA_N_Rim_Utility_2026/10414450_131_UV DISINFECTION SYSTEM.rvt
4/23/2026 11:01:58 AM

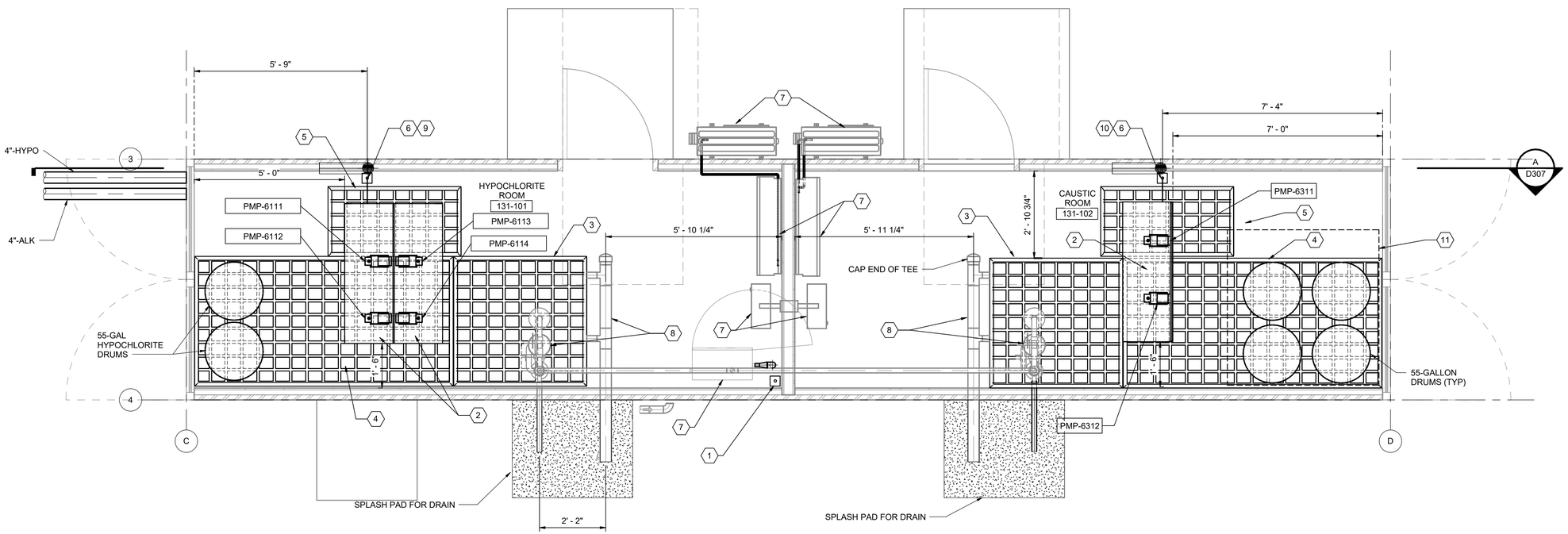

1 D106 HYPOCHLORITE AND CAUSTIC CHEMICAL STORAGE CONTAINER - PLAN
SCALE (A)

GENERAL NOTES

A. ALL BALL VALVES FOR HYPOCHLORITE SERVICE MUST BE VENTED-TYPE.

B. TUBING AND/OR HOSE BETWEEN CHEMICAL STORAGE CONTAINERS AND SKIDS NOT SHOWN FOR CLARITY

C. FIELD ROUTING OF ALL CHEMICAL CASING PIPE SHALL BE DONE USING ANY COMBINATION OF NATURAL PIPE BEND RADIUS, MAXIMUM 45-DEGREE ELBOWS, OR LONG RADIUS SWEEP-TYPE FITTINGS.

D. PORTABLE FIRE EXTINGUISHER SHALL BE LOCATED IN EACH ROOM.

KEYNOTES (X)

1. PENETRATE TRAILER FLOOR FOR WATERLINE CONNECTION. SEAL FLOOR PENETRATION.
2. DUPLEX CHEMICAL METERING PUMP ENCLOSURE ON FRP TABLE.
3. 4-DRUM HDPE SPILL CONTAINMENT PALLET HOLE SAW THROUGH PALLET WALL. INSTALL TWO, 2-IN BULKHEAD TANK ADAPTER FITTINGS FOR DRAINAGE.
4. 8-DRUM HDPE SPILL CONTAINMENT PALLET WITH NO DRAIN OUTLET.
5. 2-DRUM HDPE SPILL CONTAINMENT PALLET WITH NO DRAIN OUTLET.
6. 6. PENETRATE TRAILER FLOOR AND COMBINE 3/8" TUBING FROM EACH PUMP INTO COMMON 4" HARD CASING PIPE. SEAL FLOOR PENETRATION.
7. MECH EQUIPMENT, SEE M SHEETS.
8. PLUMBING EQUIPMENT, SEE P SHEETS.
9. TRANSITION FROM PVC TO TUBING W/IN CASING PIPE FOR HYPOCHLORITE BURIED SERVICE AS "HYPO".
10. TRANSITION FROM PVC TO TUBING W/IN CASING PIPE FOR CAUSTIC SODA BURIED SERVICE AS "ALK"
11. IF CONVERTING TO IBC CHEMICAL TOTE STORAGE, REMOVE 8-DRUM CONTAINMENT PALLET AND REPLACE WITH 2-DRUM PALLET UNDERNEATH PUMP SKID AND INSTALL NEW 64"X64"X26" TOTE CONTAINMENT PALLET.

SCALE (A) 2 0 2 4 1/2" = 1'-0"
SCALE OF FEET

Registered Professional Engineer (Civil) CERTIFICATE NO. 85332 CHRIS CARPENTER DATE SIGNED ARIZONA U.S.A.

A/E FIRM	DESIGNED:	SUB SHEET NO.	TITLE OF SHEET	DRAWING NO.
PRIME: HDR ENGINEERING, INC. DENVER, CO 80202	P. HAYNES	D106	CHEMICAL CONTAINER CHEMICAL STORAGE CONTAINER 1 - PLAN	113 182752A
	DRAWN: C. CONFER			PMIS/PKG NO. 318719
	TECH. REVIEW: D. ZINCHENKO			SHEET 39 OF 90
	DATE: JUNE 2026		NORTH RIM - GRAND CANYON NATIONAL PARK	

Autodesk Docs://10414450_NPS_GRCA_N_Rim_Utility_2026/10414450_131_CHEM CONTAINER_U.rvt
4/27/2026 11:34:22 AM

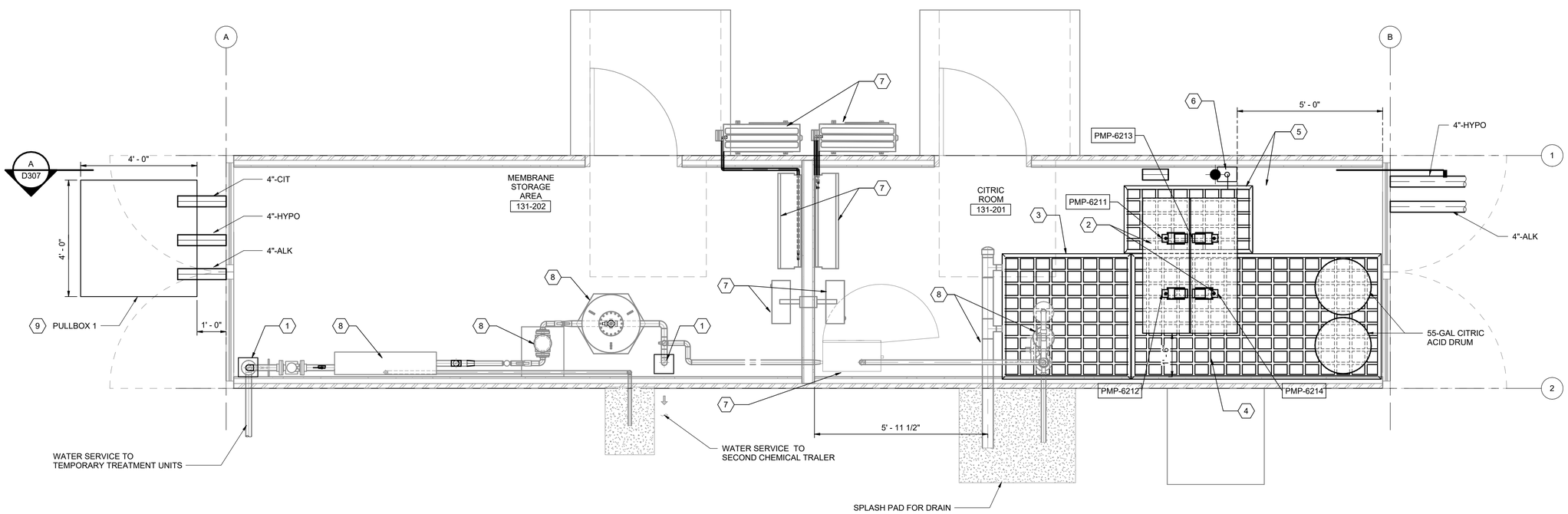

1 D107 MAINTENANCE AND CITRIC ACID CHEMICAL STORAGE CONTAINER - PLAN
SCALE A

GENERAL NOTES

A. TUBING AND/OR HOSE BETWEEN CHEMICAL STORAGE CONTAINERS AND SKIDS NOT SHOWN FOR CLARITY.

B. FIELD ROUTE "ALK" AND "HYPO" DOUBLE CONTAINMENT PIPING SYSTEMS UNDERNEATH CONTAINER AND TERMINATE IN PULL BOX.

C. FIELD ROUTING OF ALL CHEMICAL CASING PIPE SHALL BE DONE USING ANY COMBINATION OF NATURAL PIPE BEND RADIUS, MAXIMUM 45-DEGREE ELBOWS, OR LONG RADIUS SWEEP-TYPE FITTINGS.

D. PORTABLE FIRE EXTINGUISHER SHALL BE LOCATED IN EACH ROOM.

KEYNOTES (X)

1. PENETRATE TRAILER FLOOR FOR WATERLINE CONNECTION. SEAL FLOOR PENETRATION.
2. DUPLEX CHEMICAL METERING PUMP ENCLOSURE ON FRP TABLE.
3. 4-DRUM HDPE SPILL CONTAINMENT PALLET WHOLE SAW THROUGH PALLET WALL. INSTALL TWO, 2-IN BULKHEAD TANK ADAPTER FITTINGS FOR DRAINAGE.
4. 8-DRUM HDPE PALLET WITH NO DRAIN OUTLET.
5. 2-DRUM HDPE SPILL CONTAINMENT PALLET WITH NO DRAIN OUTLET.
6. 6. TRANSITION FROM PVC TO TUBING W/IN CASING PIPE FOR CITRIC ACID BURIED SERVICE AS "CIT". PENETRATE TRAILER FLOOR AND COMBINE 3/8" TUBING FROM EACH PUMP INTO COMMON 4" HARD CASING PIPE. SEAL FLOOR PENETRATION. FIELD ROUTE BURIED "CIT" TO PULL BOX.
7. PLUMBING EQUIPMENT, SEE P SHEETS.
8. MECH EQUIPMENT, SEE M SHEETS.
9. REFERENCE CIVIL SHEET C506 FOR PULLBOX DETAIL.

SCALE A 2 0 2 4 1/2" = 1'-0"
SCALE OF FEET

Registered Professional Engineer (Civil) CERTIFICATE NO. 85332 CHRIS CARPENTER DATE SIGNED 4/23/26 ARIZONA U.S.A.

A/E FIRM	DESIGNED:	SUB SHEET NO.	TITLE OF SHEET	DRAWING NO.
PRIME: HDR ENGINEERING, INC. DENVER, CO 80202	P. HAYNES	D107	CHEMICAL CONTAINER CHEMICAL STORAGE CONTAINER 2 - PLAN	113 182752A
	CADD: C. CONFER			PMIS/PKG NO. 318719
	TECH. REVIEW: D. ZINCHENKO			SHEET
	DATE: JUNE 2026		NORTH RIM - GRAND CANYON NATIONAL PARK	40 OF 90

Autodesk Docs://10414450_NPS_GRCA_N_Rim_Utility_2026/10414450_131_CHEM AND STORAGE CONTAINER_U.rvt
4/23/2026 11:07:50 AM

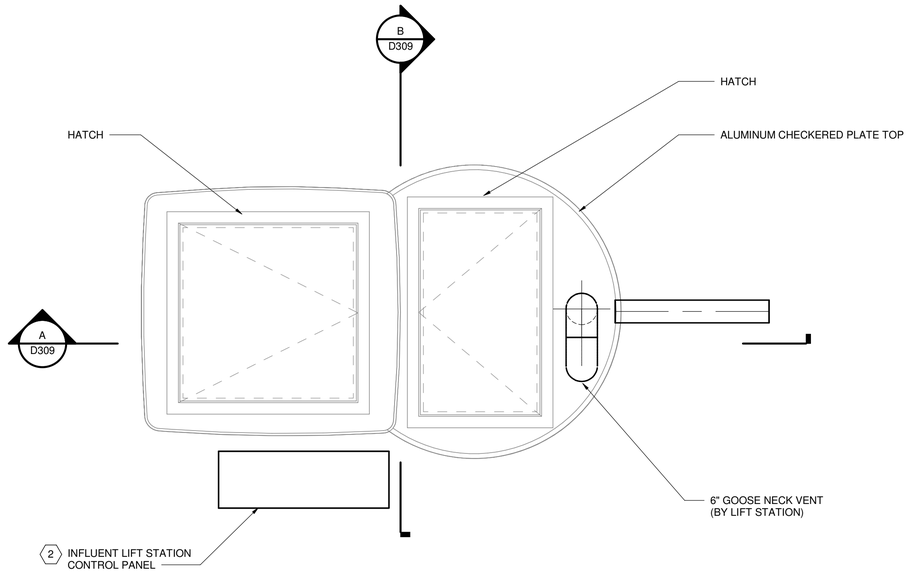

A D108 FILTRATE LIFT STATION PLAN - UPPER

SCALE A

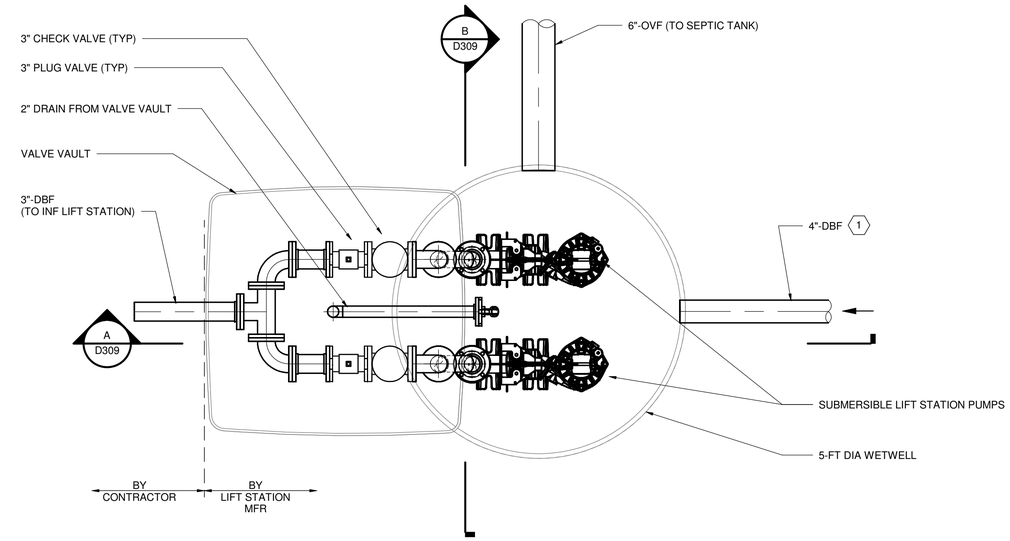

B D108 FILTRATE LIFT STATION PLAN - LOWER

SCALE A

GENERAL NOTES

A. COORDINATE WITH SITE UTILITY LAYOUTS AND FIELD VERIFY ALL DISTANCES AND ELEVATIONS PRIOR TO LIFT STATION PROCUREMENT.

B. TRIPOD CRANE TO BE MOUNTED TO CONCRETE PAD.

KEYNOTES X

1. MINIMUM DRYING BED FILTRATE TO BE 4" BUT CONTRACTOR SHALL MATCH INLET PIPE SIZE TO EXISTING DRYING BED UNDER DRAIN PIPING.

2. INTERIOR OF LIFT STATION WETWELL IS A CLASS I, DIVISION 1 HAZARDOUS AREA PER NFPA 820. A CLASS I, DIVISION 2 HAZARDOUS AREA EXTENDS 5FT BEYOND ANY OPENING IN THE LIFT STATION, INCLUDING HATCHES AND VENTS. INSTALL LIFT STATION IN A NON-HAZARDOUS AREA, MINIMUM 6FT FROM THE LIFT STATION. INSTALL CONDUIT SEAL FITTINGS BETWEEN THE LIFT STATION CONTROL PANEL AND THE WETWELL TO PREVENT MOVEMENT OF HAZARDOUS GASES. CONFIRM MATERIALS AND INSTALLATION MEETS REQUIREMENTS FOR CLASS I, DIVISION 1 LOCATIONS PER NEC AND NFPA 820.

SCALE A 1 0 1 2 3 3/4" = 1'-0"

SCALE OF FEET

Registered Professional Engineer (Civil) CERTIFICATE NO. 85332 CHRIS CARPENTER DATE SIGNED 06/09/26 ARIZONA U.S.A.

A/E FIRM	DESIGNED:	SUB SHEET NO.	TITLE OF SHEET	DRAWING NO.
PRIME: HDR ENGINEERING, INC. DENVER, CO 80202	P. HAYNES	D108	MULTIPLE STRUCTURE NAME FILTRATE LIFTSTATION PLANS	113 182752A
	C. CONFER			PMIS/PKG NO. 318719
	TECH. REVIEW: D. ZINCHENKO			SHEET 41 OF 90
	DATE: JUNE 2026		NORTH RIM - GRAND CANYON NATIONAL PARK	

Autodesk Docs://10414450_NPS_GRCA_N_Rim_Utility_2026/10414450_131_FILTRATE LS_U.rvt
6/10/2026 2:26:29 PM

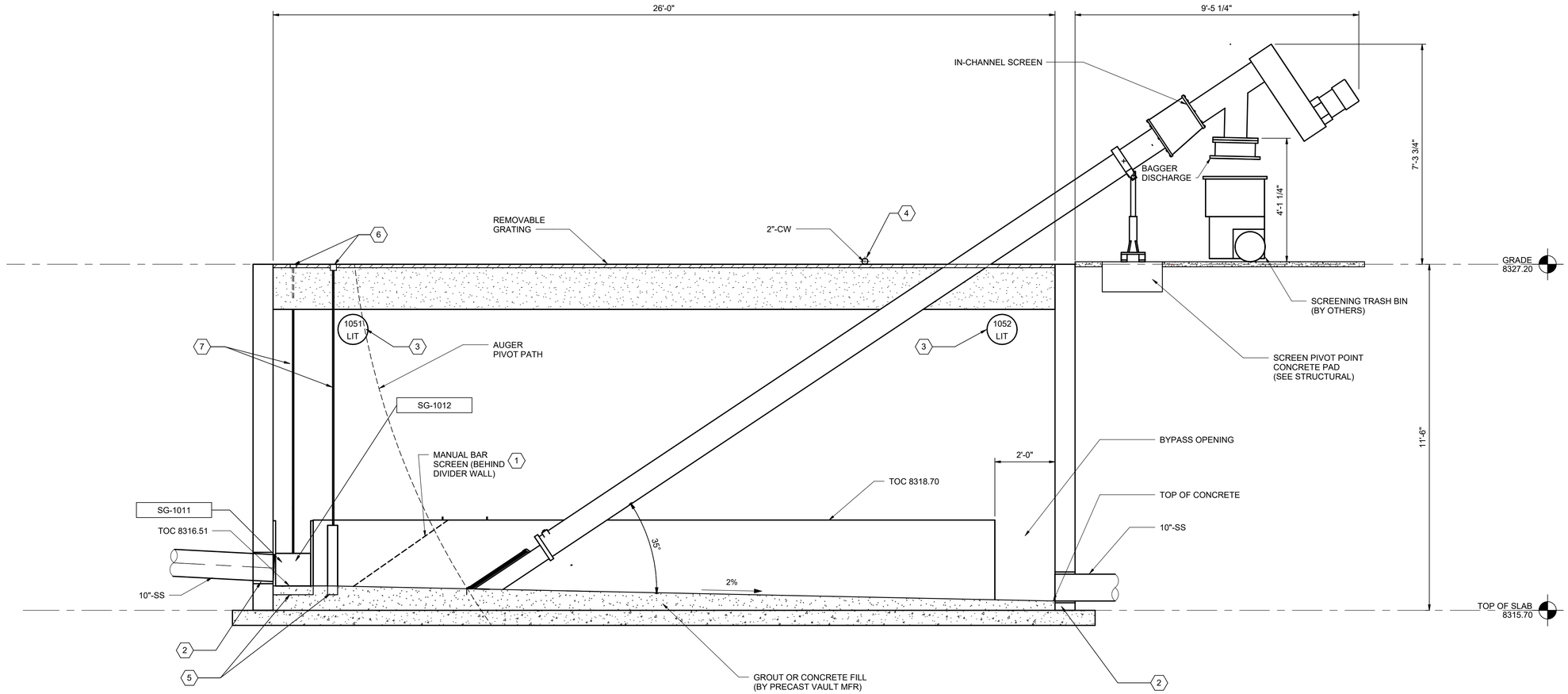

A D301 SECTION
SCALE A

GENERAL NOTES

A. CONTRACTOR TO PROVIDE ROLLING GANTRY CRANE FOR REMOVAL OF EQUIPMENT WITHIN SCREENING VAULT. SEE SPECIFICATION SECTION 41 22 13.

KEYNOTES X

1. INCLUDE MANUAL RAKE FOR MANUAL BAR SCREEN.
2. SEE SHEET C801 FOR YARD PIPE PROFILE.
3. CONTRACTOR TO VERIFY LOCATION OF LEVEL TRANSMITTERS WITHIN THE VAULT WITH MECHANICAL SCREEN MANUFACTURER.
4. WATER SOURCE CONNECTION TO SCREEN. COORDINATE REQUIREMENTS WITH MECHANICAL SCREEN MANUFACTURER . FIELD-ROUTE WATER SUPPLY TO MECHANICAL SCREEN PER SCREEN MFR INSTRUCTIONS AND HOSE RECOMMENDATIONS.
5. COORDINATE SLIDE GATE BOTTOM SEAL EMBED REQUIREMENTS WITH PRECAST VAULT MFR
6. FLUSH-MOUNTED, GEARED FLOOR BOX GATE OPERATOR W/REMOVABLE T-HANDLE KEY
7. PROVIDE STEM GUIDES AND STEM SUPPORTS FOR EACH GATE STEM PER GATE MFR RECOMMENDATIONS

SCALE A 2 0 2 4 1/2" = 1'-0"
SCALE OF FEET

Registered Professional Engineer (Civil) CERTIFICATE NO. 85332 CHRIS CARPENTER DATE SIGNED ARIZONA U.S.A.

A/E FIRM	DESIGNED:	SUB SHEET NO.	TITLE OF SHEET	DRAWING NO.
PRIME: HDR ENGINEERING, INC. DENVER, CO 80202	P. HAYNES CADD C. CONFER TECH. REVIEW: D. ZINCHENKO DATE: JUNE 2026	D301	MULTIPLE STRUCTURE NAME INFLUENT SCREENING VAULT - SECTION NORTH RIM - GRAND CANYON NATIONAL PARK	113 182752A PMIS/PKG NO. 318719 SHEET 42 OF 90

Autodesk Docs://10414450_NPS_GRCA_N_Rim_Utility_2026/10414450_131_MECH SCREEN_U.rvt
4/27/2026 11:16:07 AM

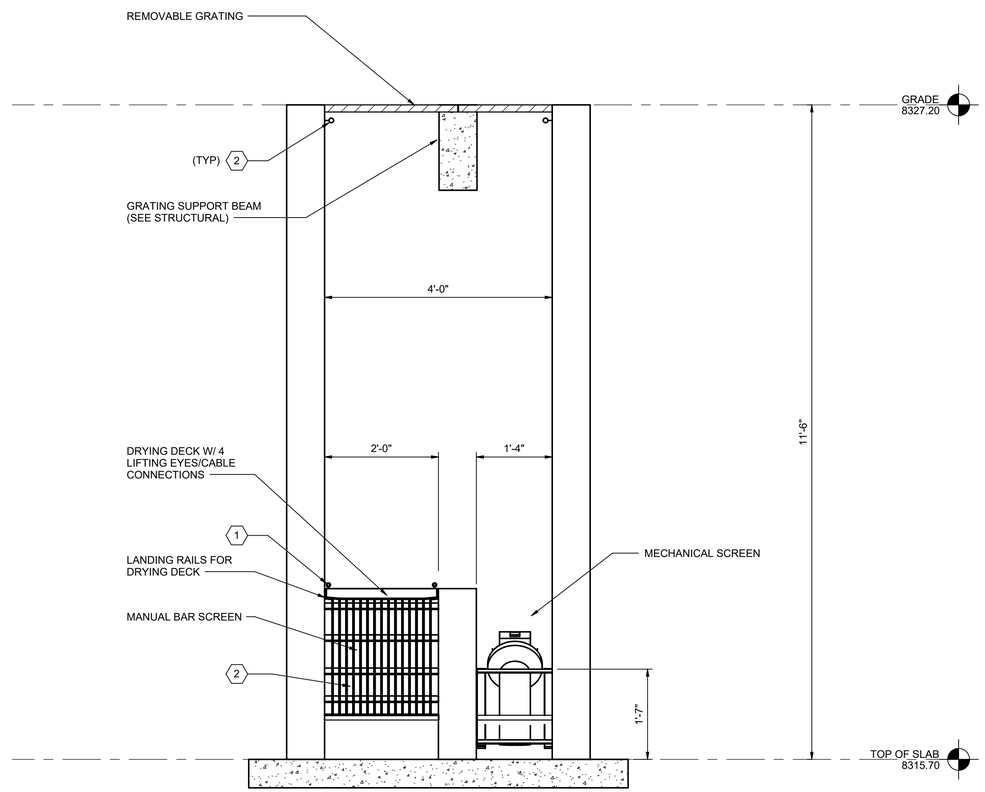

B
D302
INFLUENT SCREENING VAULT SECTION VIEW
SCALE A

KEYNOTES X

1. PROVIDE LIFTING CABLE, STORED LOOSE AND BACK TO GIVE ACCESS FOR MANUAL SCREEN RAKE.
2. PROVIDE CABLE/CHAIN RETENTION CLIP JUST BELOW GRATING FOR ANY EQUIPMENT TO BE LIFTED OUT VIA CRANE

SCALE A 2 0 2 4 1/2" = 1'-0"
SCALE OF FEET

Registered Professional Engineer (Civil)
CERTIFICATE NO.
85332
CHRIS
CARPENTER
DATE SIGNED
ARIZONA U.S.A.

A/E FIRM	DESIGNED:	SUB SHEET NO.	TITLE OF SHEET	DRAWING NO.
PRIME: HDR ENGINEERING, INC. DENVER, CO 80202	P. HAYNES	D302	MULTIPLE STRUCTURE NAME INFLUENT SCREENING VAULT - SECTION	113 182752A
	DRAWN: C. CONFER			PMIS/PKG NO. 318719
	TECH. REVIEW: D. ZINCHENKO			SHEET 43 OF 90
	DATE: JUNE 2026		NORTH RIM - GRAND CANYON NATIONAL PARK	

Autodesk Docs://10414450_NPS_GRCA_N_Rim_Utility_2026/10414450_131_MECH SCREEN_U.rvt
4/24/2026 11:49:53 AM

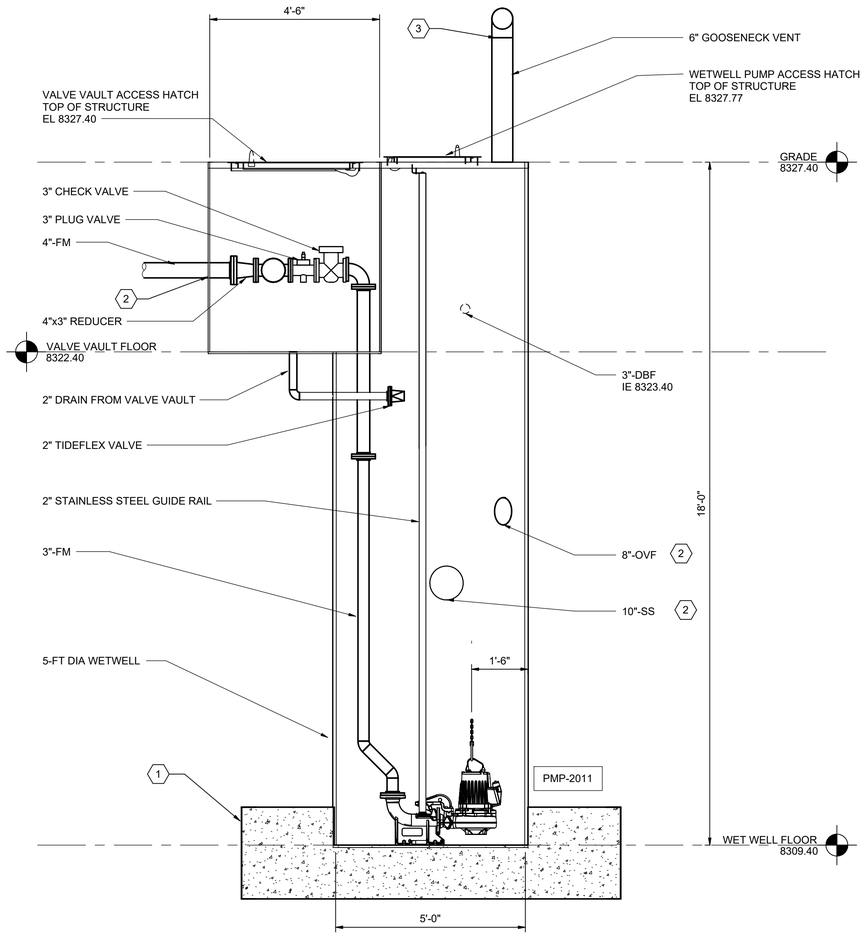

A D303 INFLUENT LIFT STATION SECTION 1

SCALE A

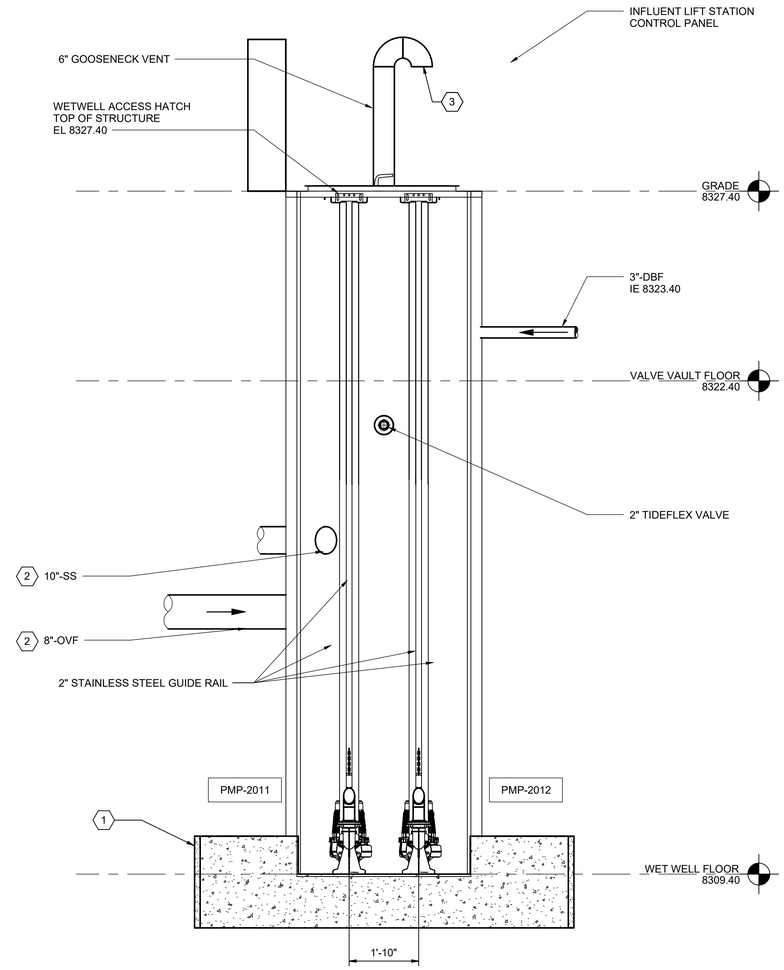

B D303 INFLUENT LIFT STATION SECTION 2

SCALE A

GENERAL NOTES

A. CONTRACTOR TO COORDINATE PIPE PENETRATIONS WITH LIFT STATION MANUFACTURER.

KEYNOTES X

1. CONCRETE REBAR TO BE COORDINATED AND INSTALLED BY PUMP STATION MANUFACTURER
2. SEE SHEET C801 FOR PIPE INVERTS.
3. PROVIDE INSECT SCREEN AT GOOSENECK VENT OUTLET

SCALE A 2 0 2 4 1/2" = 1'-0"

SCALE OF FEET

Registered Professional Engineer (Civil) CERTIFICATE NO. 85332 CHRIS CARPENTER DATE SIGNED ARIZONA U.S.A.

A/E FIRM	DESIGNED:	SUB SHEET NO.	TITLE OF SHEET	DRAWING NO.
PRIME: HDR ENGINEERING, INC. DENVER, CO 80202	P. HAYNES	D303	MULTIPLE STRUCTURE NAME INFLUENT LIFT STATION - SECTIONS	113 182752A
	DADE C. CONFER			PMIS/PKG NO. 318719
	TECH. REVIEW: D. ZINCHENKO			SHEET 44 OF 90
	DATE: JUNE 2026		NORTH RIM - GRAND CANYON NATIONAL PARK	

Autodesk Docs://10350545_NPS_GRCA_N_Rim_Utility_2026/10414450_131_LIFT STATION_U.rvt
4/23/2026 10:56:59 AM

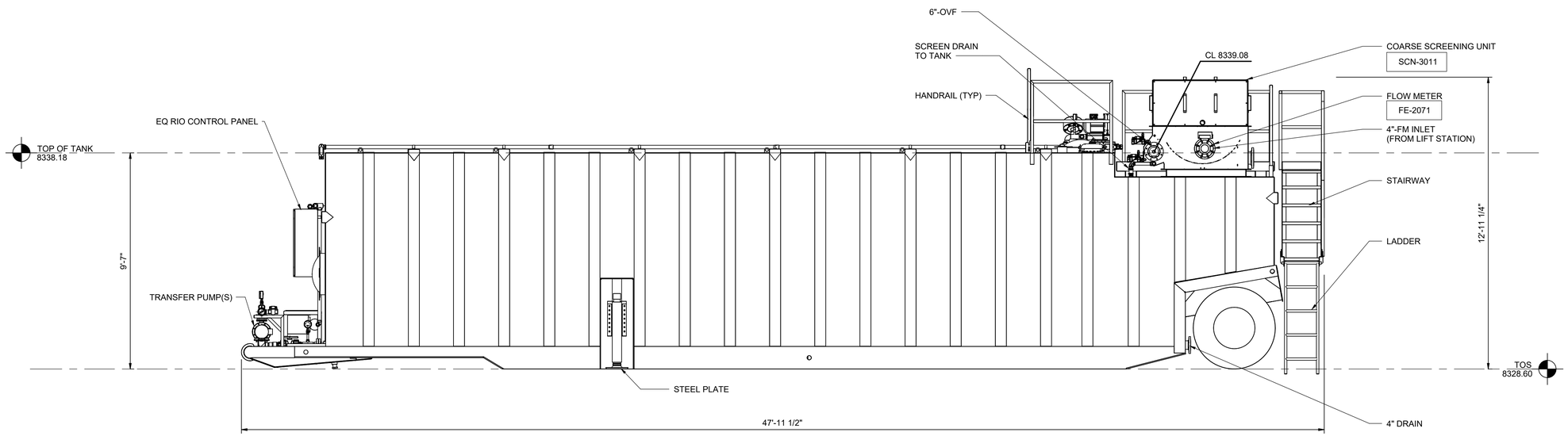

A D304 EQUALIZATION TANK SYSTEM SECTION 1
SCALE (A)

GENERAL NOTES

A. CONTRACTOR MUST VERIFY PROCESS CONNECTION, SIZE, TYPE, LOCATION, AND RELATIVE ELEVATION OF EACH UNIT WITH MANUFACTURER WITH PIPE PENETRATION INSTALLATION IN THE SLAB.

B. EQ TANK TO BE LOCATED ON TOP OF 82'x12.5' CONCRETE PAD NEXT TO UV DISINFECTION SYSTEM. SEE SHEET S500 FOR PAD DETAILS.

KEYNOTES (X)

1. SEE CIVIL SHEETS FOR PIPE CONNECTION DETAILS.
2. MANUFACTURER TO PROVIDE 2 TRANSFER PUMPS. ONE FOR EACH MBR UNIT.

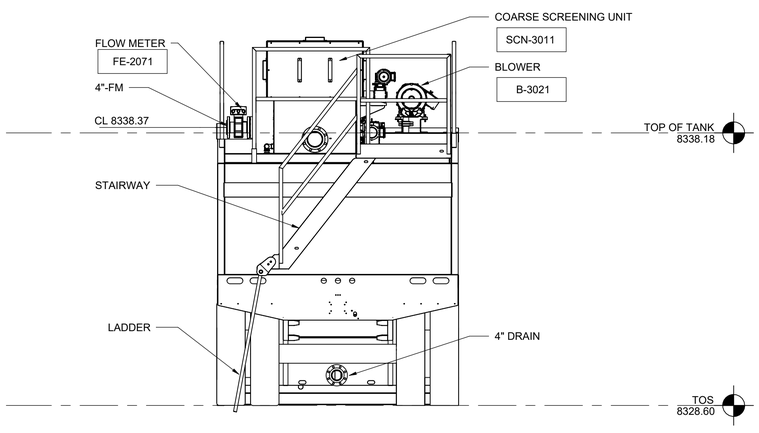

B D304 EQUALIZATION TANK SYSTEM SECTION 2
SCALE (A)

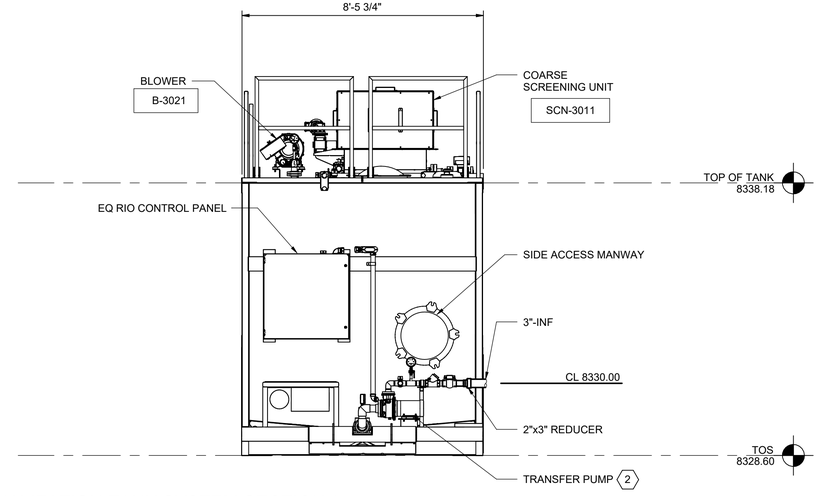

C D304 EQUALIZATION TANK SYSTEM SECTION 3
SCALE (A)

SCALE (A) 2 0 2 4 6 3/8" = 1'-0"
SCALE OF FEET

Registered Professional Engineer (Civil) CERTIFICATE NO. 85332 CHRIS CARPENTER DATE SIGNED 04/23/26 ARIZONA U.S.A.

A/E FIRM	DESIGNED:	SUB SHEET NO.	TITLE OF SHEET	DRAWING NO.
PRIME: HDR ENGINEERING, INC. DENVER, CO 80202	P. HAYNES	D304	MULTIPLE STRUCTURE NAME EQUALIZATION TANK - SECTIONS	113 182752A
	DRAWN: C. CONFER			PMIS/PKG NO. 318719
	TECH. REVIEW: D. ZINCHENKO			SHEET 45 OF 90
	DATE: JUNE 2026		NORTH RIM - GRAND CANYON NATIONAL PARK	

Autodesk Docs://10414450_NPS_GRCA_N_Rim_Utility_2026/10414450_131_EQ TANK_U.rvt
4/23/2026 10:58:27 AM

GENERAL NOTES

A. TYPICAL FOR 2 UNITS.

B. RELATIVE DIMENSIONS, CONNECTIONS, AND ARRANGEMENT APPLY TO ALL MOBILE MBR TREATMENT UNITS.

C. COORDINATE NOZZLE LOCATIONS, ALL DIMENSIONS, AND WEIGHTS WITH MBR TREATMENT UNIT MFR.

D. CONTRACTOR MUST VERIFY PROCESS CONNECTION, SIZE, TYPE, LOCATION, AND RELATIVE ELEVATION ON EACH UNIT WITH MANUFACTURER WITH PIPE PENETRATION INSTALLATION IN THE SLAB. ATTACH PROCESS PIPE TO UNIT AT EACH PROCESS CONNECTION THROUGH THREADED OR FLANGED RUBBER FLEXIBLE COUPLING ADAPTER. PROCO SERIES 260R OR EQUAL.

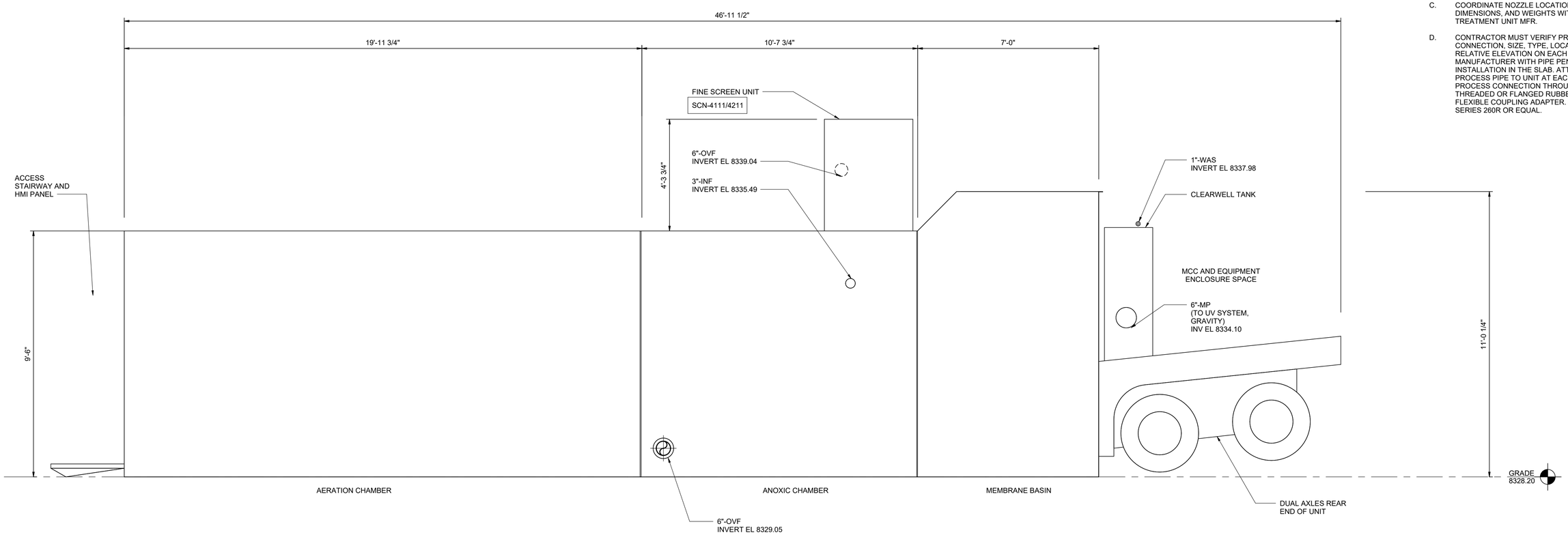

A / D305 TEMPORARY WASTEWATER TREATMENT UNIT - SECTION

SCALE (A)

SCALE (A) 2 0 2 4 1/2" = 1'-0"

SCALE OF FEET

Registered Professional Engineer (Civil) CERTIFICATE NO. 85332 CHRIS CARPENTER DATE SIGNED 04/23/26 ARIZONA U.S.A.

A/E FIRM	DESIGNED:	SUB SHEET NO.	TITLE OF SHEET	DRAWING NO.
PRIME: HDR ENGINEERING, INC. DENVER, CO 80202	P. HAYNES CADD: C. CONFER TECH. REVIEW: D. ZINCHENKO DATE: JUNE 2026	D305	MULTIPLE STRUCTURE NAME MBR UNIT - SECTION NORTH RIM - GRAND CANYON NATIONAL PARK	113 182752A PMIS/PKG NO. 318719 SHEET 46 OF 90

Autodesk Docs://10414450_NPS_GRCA_N_Rim_Utility_2026/10414450_131_TREATMENT UNIT_U.rvt
4/23/2026 11:00:13 AM

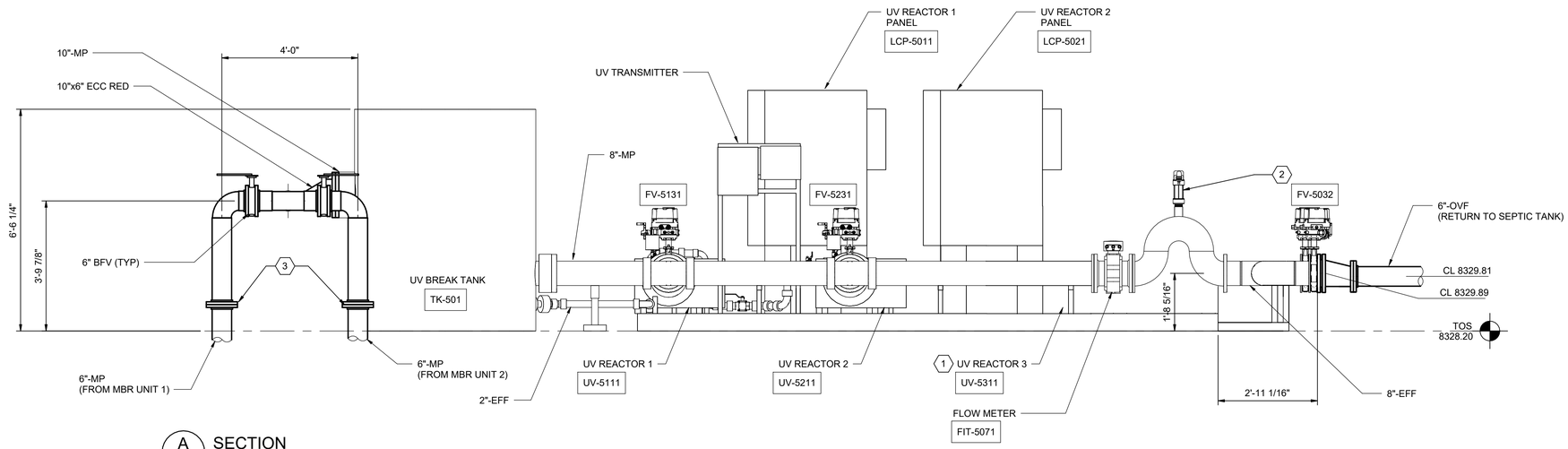

A D306 SECTION
SCALE A

KEYNOTES X

1. UV UNIT LAMPS NOT INSTALLED, UNIT LEFT BLANK.
2. LEVEL CONTROL HIGH POINT WITH ANTI-SIPHON ARV.
3. FLANGE TRANSITION B/W BURIED AND EXPOSED PIPE. SEE CIVIL DETAILS FOR BURIED PIPE CONTINUATION

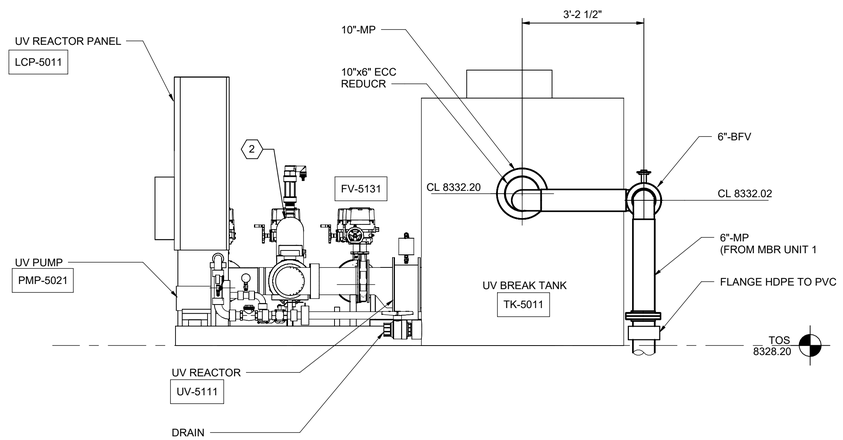

B D306 SECTION
SCALE A

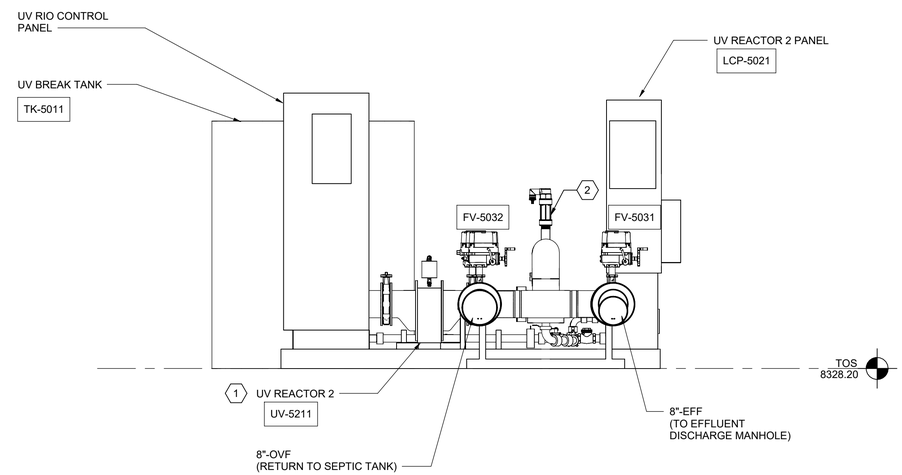

C D306 SECTION
SCALE A

SCALE A 2 0 2 4 1/2" = 1'-0"
SCALE OF FEET

Registered Professional Engineer (Civil) CERTIFICATE NO. 85332 CHRIS CARPENTER DATE SIGNED ARIZONA U.S.A.

A/E FIRM	DESIGNED:	SUB SHEET NO.	TITLE OF SHEET	DRAWING NO.
PRIME: HDR ENGINEERING, INC. DENVER, CO 80202	P. HAYNES	D306	MULTIPLE STRUCTURE NAME UV DISINFECTION - SECTION	113 182752A
	CADD: C. CONFER			PMIS/PKG NO. 318719
	TECH. REVIEW: D. ZINCHENKO			SHEET
	DATE: JUNE 2026		NORTH RIM - GRAND CANYON NATIONAL PARK	47 OF 90

Autodesk Docs://10414450_NPS_GRCA_N_Rim_Utility_2026/10414450_131_UV DISINFECTION SYSTEM.rvt
4/23/2026 11:02:06 AM

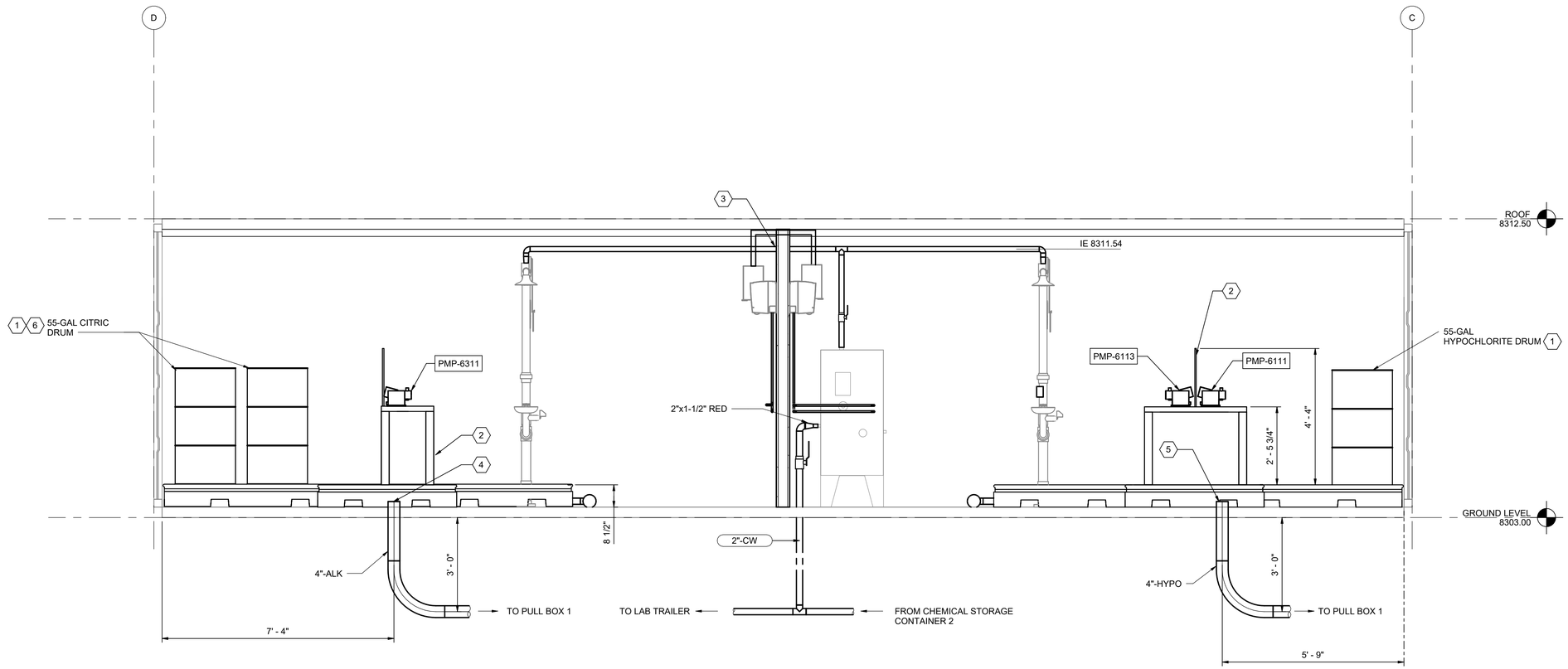

A D307 HYPOCHLORITE AND CAUSTIC CHEMICAL STORAGE CONTAINER - SECTION
SCALE A

GENERAL NOTES

A. SEE P&ID'S FOR PANEL DETAILS AND APPURTENANCES.

B. BALL VALVES MUST BE VENTED FOR HYPOCHLORITE SERVICES.

C. TUBING AND/OR HOSE BETWEEN CHEMICAL STORAGE CONTAINERS AND SKIDS NOT SHOWN FOR CLARITY.

D. FIELD ROUTE "ALK" AND "HYPO" DOUBLE CONTAINMENT PIPING SYSTEMS UNDERNEATH CONTAINER AND TERMINATE IN PULL BOX.

E. FIELD ROUTING OF ALL CHEMICAL CASING PIPE SHALL BE DONE USING ANY COMBINATION OF NATURAL PIPE BEND RADIUS, MAXIMUM 45-DEGREE ELBOWS, OR LONG RADIUS SWEEP-TYPE FITTINGS.

F. ROUTE CHEMICAL HARD PIPE BETWEEN SKID AND TUBING/CASING TRANSITION ALONG CONTAINER CEILINGS AND WALL(S).

KEYNOTES X

1. FIELD CUT 1" PVC TO HEIGHT OF DRUM. PLACE IN DRUM AND CONNECT TO 3/8" POLYETHYLENE TUBING AND ROUTE TO CHEMICAL METERING SKID INLET.
2. DUPLEX CHEMICAL METERING PUMP ENCLOSURE ON FRP TABLE.
3. ENSURE PIPE PENETRATING FIRE-RATED WALL IS PROTECTED WITH APPROVED FIRE-STOP SYSTEM.
4. TRANSITION FROM PVC TO TUBING W/IN CASING PIPE FOR CAUSTIC SODA BURIED SERVICE AS "ALK".
5. TRANSITION FROM PVC TO TUBING W/IN CASING PIPE FOR HYPOCHLORITE BURIED SERVICE AS "HYPO".
6. IF CONVERTING TO IBC CHEMICAL TOTE STORAGE, REMOVE 8-DRUM CONTAINMENT PALLET AND REPLACE WITH 2-DRUM PALLET UNDERNEATH PUMP SKID AND INSTALL NEW 64"X64"X26" TOTE CONTAINMENT PALLET.
7. SEE CIVIL YARD PIPING PLAN FOR CONTINUATION.

SCALE A 2 0 2 4 1/2" = 1'-0"
SCALE OF FEET

Registered Professional Engineer (Civil) CERTIFICATE NO. 85332 CHRIS CARPENTER DATE SIGNED 4/27/26 ARIZONA U.S.A.

A/E FIRM	DESIGNED:	SUB SHEET NO.	TITLE OF SHEET	DRAWING NO.
PRIME: HDR ENGINEERING, INC. DENVER, CO 80202	P. HAYNES DRAWN: C. CONFER TECH. REVIEW: D. ZINCHENKO DATE: JUNE 2026	D307	CHEMICAL CONTAINER CHEMICAL STORAGE CONTAINER 1 - SECTION NORTH RIM - GRAND CANYON NATIONAL PARK	113 182752A PMIS/PKG NO. 318719 SHEET 48 OF 90

Autodesk Docs://10414450_NPS_GRCA_N_Rim_Utility_2026/10414450_131_CHEM CONTAINER_U.rvt
4/27/2026 4:49:53 PM

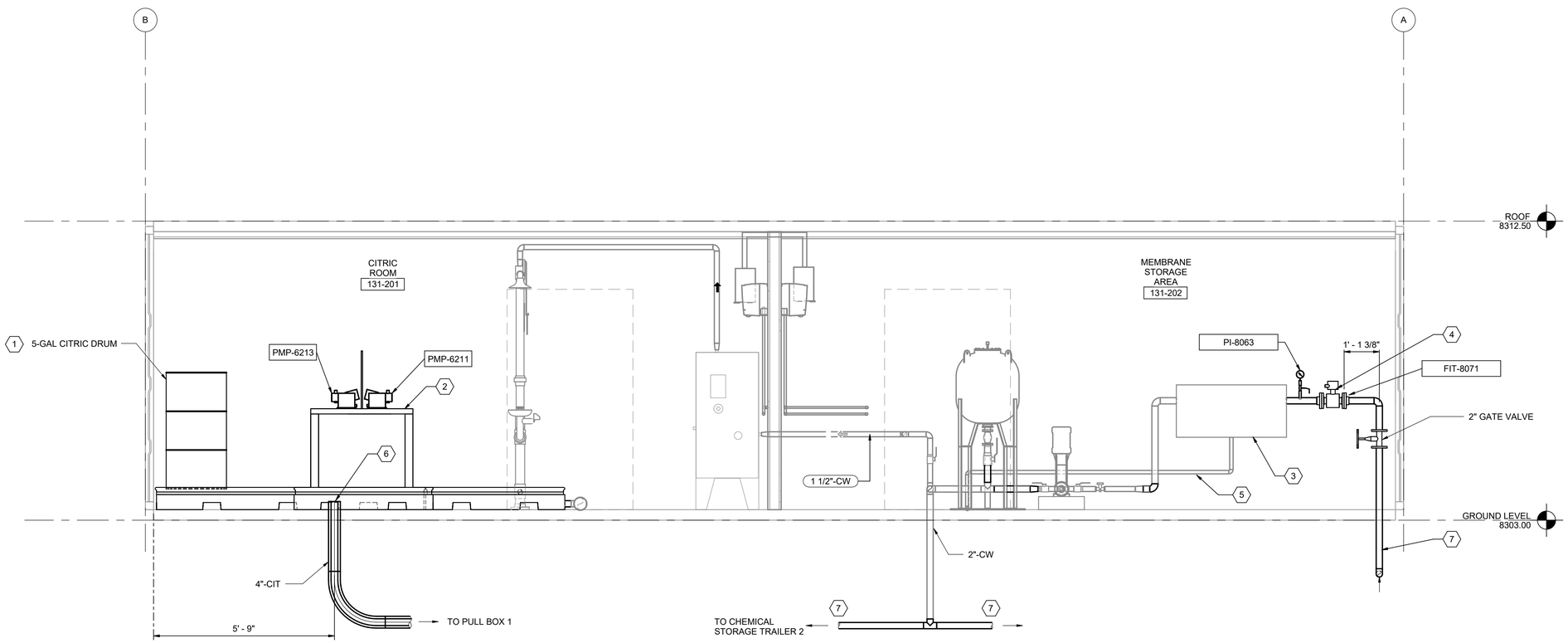

A
D308
MAINTENANCE AND CITRIC ACID CHEMICAL STORAGE CONTAINER - SECTION
SCALE A

GENERAL NOTES

A. SEE P&ID'S FOR PANEL DETAILS AND APPURTENANCES.

B. TUBING AND/OR HOSE BETWEEN CHEMICAL STORAGE CONTAINERS AND SKIDS NOT SHOWN FOR CLARITY.

C. FIELD ROUTE "CIT" DOUBLE CONTAINMENT PIPING SYSTEMS UNDERNEATH CONTAINER AND TERMINATE IN PULL BOX.

D. FIELD ROUTING OF ALL CHEMICAL CASING PIPE SHALL BE DONE USING ANY COMBINATION OF NATURAL PIPE BEND RADIUS, MAXIMUM 45-DEGREE ELBOWS, OR LONG RADIUS SWEEP-TYPE FITTINGS.

E. ROUTE CHEMICAL HARD PIPE BETWEEN SKID AND TUBING/CASING TRANSITION ALONG CONTAINER CEILING AND WALL(S).

KEYNOTES (X)

1. FIELD CUT 1" PVC TO HEIGHT OF DRUM. PLACE IN DRUM AND CONNECT TO 3/8" POLYETHYLENE TUBING AND ROUTE TO CHEMICAL METERING SKID INLET.
2. DUPLEX CHEMICAL METERING PUMP ENCLOSURE ON FRP TABLE.
3. WATTS 2" REDUCED PRESSURE ZONE BACKFLOW PREVENTER WITH STRAINER - MODEL LF009.
4. PROVIDE 2" FLOW METER PER NPS UTILITIES APPROVED MAKE AND MODELS.
5. DRAINLINE FOR RPZ. DISCHARGE ON SPRAY PAD OUTSIDE TRAILER.
6. TRANSITION FROM PVC TO TUBING W/IN CASING PIPE FOR CITRIC ACID BURIED SERVICE AS "CIT".
7. SEE CIVIL YARD PIPING PLAN FOR CONTINUATION.

SCALE A 2 0 2 4 1/2" = 1'-0"
SCALE OF FEET

Registered Professional Engineer (Civil) CERTIFICATE NO. 85332 CHRIS CARPENTER DATE SIGNED 4/27/26 ARIZONA U.S.A.

A/E FIRM	DESIGNED:	SUB SHEET NO.	TITLE OF SHEET	DRAWING NO.
PRIME: HDR ENGINEERING, INC. DENVER, CO 80202	P. HAYNES	D308	CHEMICAL CONTAINER CHEMICAL STORAGE CONTAINER 2 - SECTION	113 182752A
	DRAWN: C. CONFER			PMIS/PKG NO. 318719
	TECH. REVIEW: D. ZINCHENKO			SHEET
	DATE: JUNE 2026		NORTH RIM - GRAND CANYON NATIONAL PARK	49 OF 90

Autodesk Docs://10414450_NPS_GRCA_N_Rim_Utility_2026/10414450_131_CHEM AND STORAGE CONTAINER_U.rvt
4/27/2026 4:51:16 PM

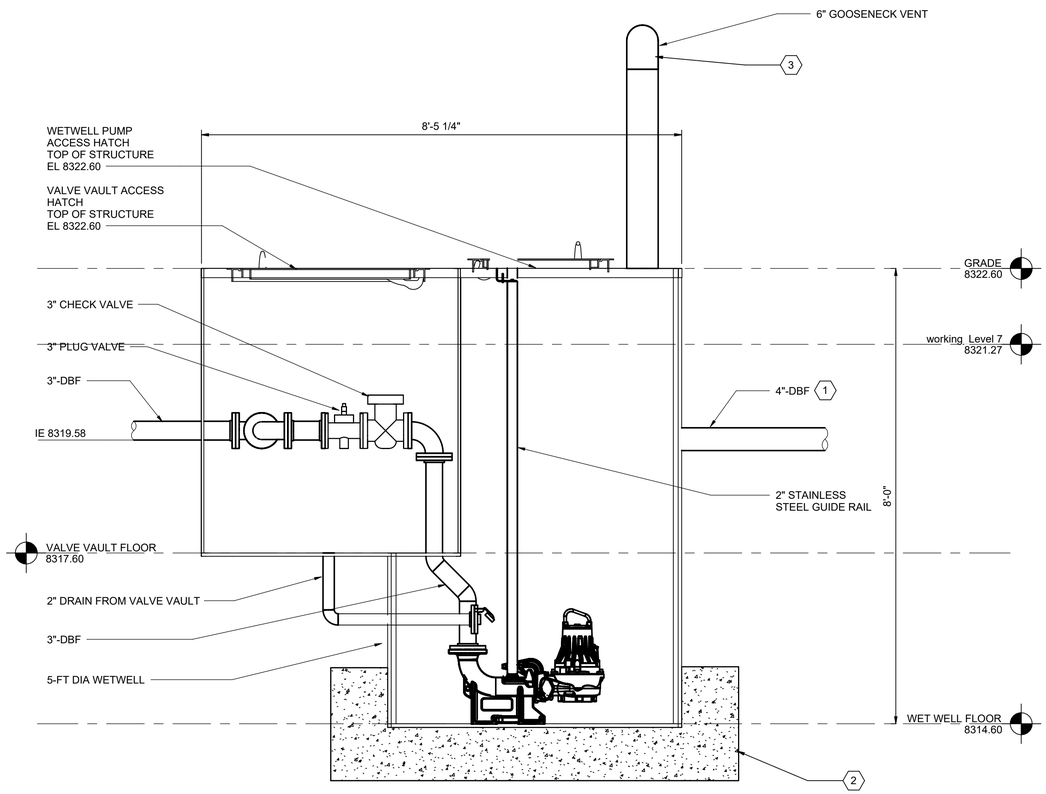

A D309 FILTRATE LIFT STATION SECTION 1
SCALE A

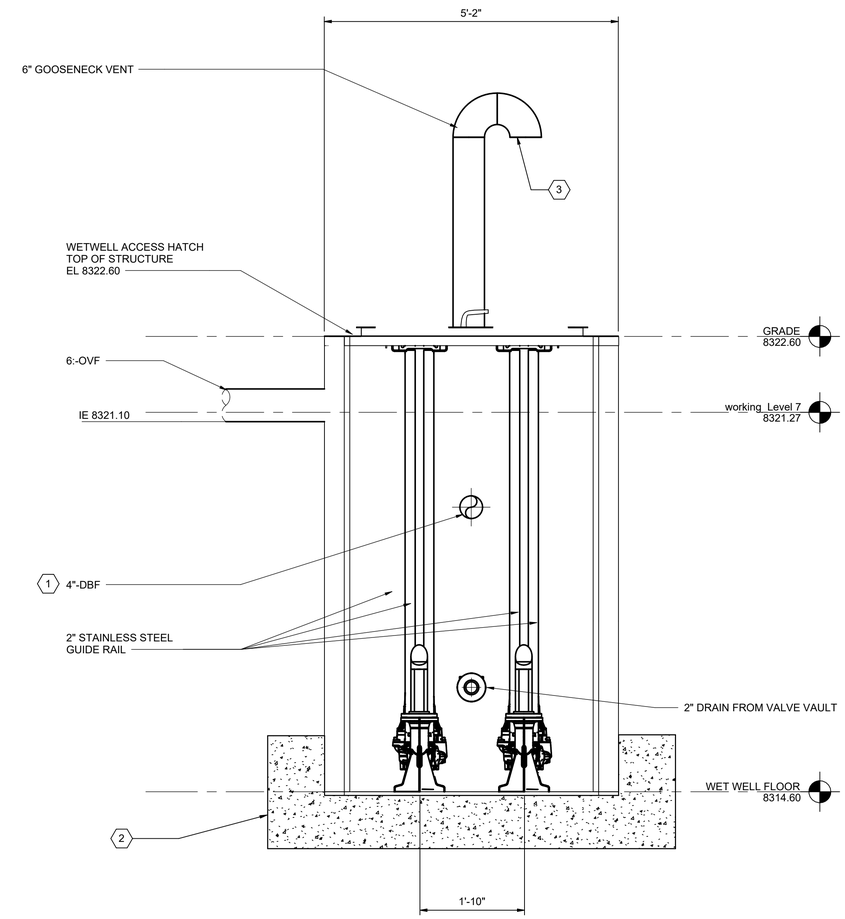

B D309 FILTRATE LIFT STATION SECTION 2
SCALE A

GENERAL NOTES

1. PIPE PENETRATIONS TO BE INSTALLED BY PUMP STATION MANUFACTURER.

KEYNOTES X

1. CONTRACTOR TO FIELD VERIFY INLET ELEVATION.
2. CONCRETE REBAR TO BE COORDINATED AND INSTALLED BY PUMP STATION MANUFACTURER
3. PROVIDE INSECT SCREEN AT GOOSENECK VENT OUTLET

SCALE A 1 0 1 2 3 3/4" = 1'-0"
SCALE OF FEET

Registered Professional Engineer (Civil) CERTIFICATE NO. 85332 CHRIS CARPENTER DATE SIGNED 06/26/26 ARIZONA U.S.A.

A/E FIRM PRIME: HDR ENGINEERING, INC. DENVER, CO 80202	DESIGNED: P. HAYNES DRAWN: C. CONFER TECH. REVIEW: D. ZINCHENKO DATE: JUNE 2026	SUB SHEET NO. D309	TITLE OF SHEET MULTIPLE STRUCTURE NAME FILTRATE LIFTSTATION SECTIONS NORTH RIM - GRAND CANYON NATIONAL PARK

DRAWING NO. 113 / 182752A
PMIS/PKG NO. 318719
SHEET 50 OF 90

Autodesk Docs://10414450_NPS_GRCA_N_Rim_Utility_2026/10414450_131_FILTRATE LS_U.rvt
4/27/2026 11:15:18 AM

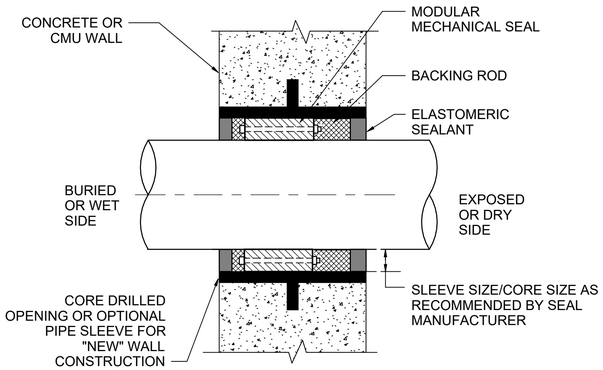

NOTES:

1. PROVIDE DOUBLE ROW OF MODULAR MECHANICAL SEALS FOR PIPES 8" DIAMETER AND LARGER IF CONCRETE THICKNESS PERMITS.
2. BOLT HEADS ON ACCESSIBLE SIDE OF PENETRATION.
3. PROVIDE MECHANICAL SEALS WITH TYPE 316 STAINLESS STEEL BOLTS AND HARDWARE AND EPDM SEALING ELEMENTS.

1 D501 PIPE 4" AND GREATER THROUGH NON-RATED WALL
NO SCALE

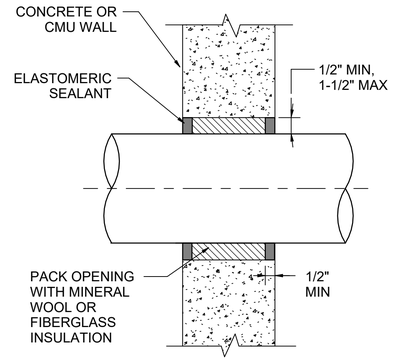

2 D501 PIPE LESS THAN 4" THROUGH NON-RATED WALL
NO SCALE

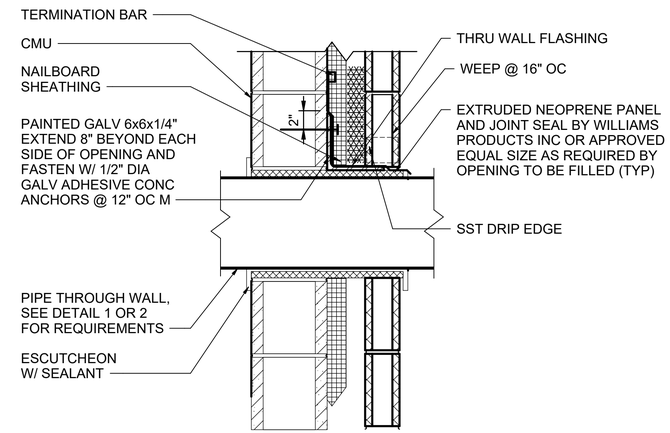

3 D501 PIPE THROUGH EXTERIOR WALL WITH VENEER
NO SCALE

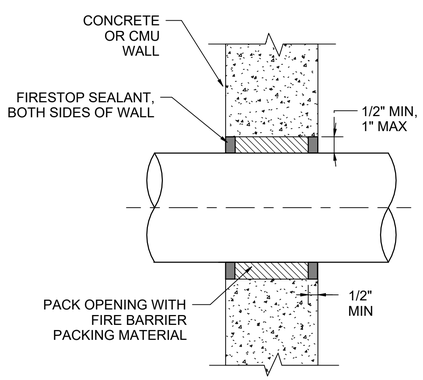

4 D501 PIPE THROUGH FIRE-RATED WALL
NO SCALE

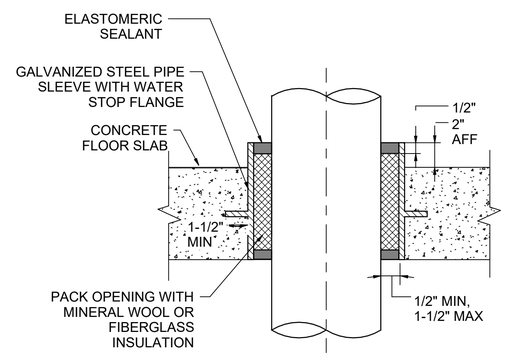

5 D501 PIPE LESS THAN 4" THROUGH FLOOR SLAB
NO SCALE

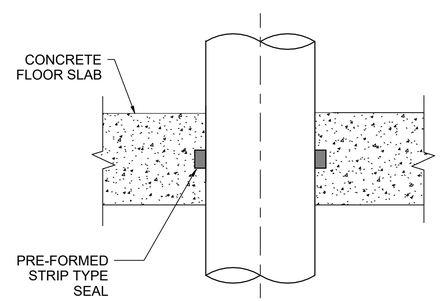

6 D501 PIPE 4" AND GREATER THROUGH FLOOR SLAB
NO SCALE

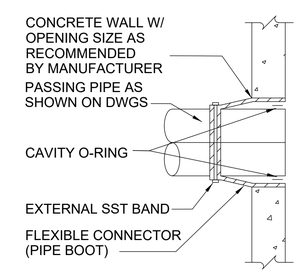

7 D501 CONCRETE WALL OPENING
NO SCALE

Autodesk Docs://10414450_NPS_GRCA_N_Rim_Utility_2026/10350545_130_GENERAL.rvt
4/23/2026 11:16:50 AM

Registered Professional Engineer (Civil) CERTIFICATE NO. 85332 CHRIS CARPENTER Date Signed 4/23/26 ARIZONA U.S.A.

A/E FIRM	DESIGNED:	SUB SHEET NO.	TITLE OF SHEET	DRAWING NO.
PRIME: HDR ENGINEERING, INC. DENVER, CO 80202	S. MAAZ	D501	GENERAL PROCESS DETAILS - PIPE PENETRATION	113 182752A
	CADD C. CONFER			PMIS/PKG NO. 318719
	TECH. REVIEW: D. ZINCHENKO			SHEET
	DATE: JUNE 2026		NORTH RIM - GRAND CANYON NATIONAL PARK	51 OF 90

GENERAL DESIGN PARAMETERS

DESIGN PARAMETERS

WASTEWATER TEMPERATURE	12 DEG C
SUMMER AIR CONDITIONS	100 F, 80% RH, 10.79 PSIA
SHOULDER AIR CONDITIONS	39 F, 25% RH, 10.79 PSIA

FLOWS

MDF	9,000 GPD
AAF	60,000 GPD
MMF	86,000 GPD
PHF (PRE-EQ)	208,000 GPD
PHF (POST EQ)	172,000 GPD

INFLUENT CHARACTERISTICS

PH	7.9 S.U.
BOD	465 MG/L
TSS	465 MG/L
TKN	85 MG/L
NH4-N	69 MG/L
TP	8 MG/L

DESIGN EFFLUENT LIMITS

PH	6.5 to 9.0 S.U.
BOD	10 MG/L
TSS	10 MG/L
NH3	1 MG/L
TN	10 MG/L
TP	NO PERMIT LIMIT
E. COLI	126 CFU/ 100 ML

INFLUENT SCREENING SYSTEM

MECHANICAL SCREEN

NUMBER	1
TYPE	IN-CHANNEL AUGER
CHANNEL WIDTH	16 IN
PERFORATION SIZE	6 MM
MOTOR POWER	1.5 HP

MANUAL BAR SREEN

NUMBER	1
OPENING SIZE	1.5 INCHES

INFLUENT LIFT STATION

LIFT STATION

OPERATING VOLUME	1,300 GAL
TOP OF LID	8327.40 FT

LIFT STATION PUMPS

NUMBER	2
TYPE	SUBMERSIBLE, SOLIDS HANDLING
CAPACITY	120 GPM
TDH	32 FT

EQUALIZATION

EQUALIZATION TANK

NUMBER, TOTAL	1
VOLUME	20,000
BOTTOM OF TANK EL	8328.60 FT

COARSE SCREENING

NUMBER, TOTAL	1
TYPE	ROTARY BRUSH
PERFORATION SIZE	6 MM
CAPACITY	PER MFR
MOTOR POWER	0.5 HP
WASHER COMPACTOR QUANTITY	1
MOTOR POWER	0.5 HP

BLOWER

NUMBER, TOTAL	1
TYPE	REGENERATIVE
CAPACITY	PER MFR
MOTOR POWER	4 HP

TRANSFER PUMP

NUMBER, TOTAL	2
TYPE	END SUCTION CENTRIFUGAL
CAPACITY	PER MFR
MOTOR POWER	0.75 HP

SECONDARY TREATMENT

MBR TREATMENT UNIT

NUMBER, TOTAL	2
AREA, PER UNIT	720 SF

FINE SCREENING

NUMBER OF SCREENS, PER UNIT	1
TYPE	ROTARY BRUSH
PERFORATION SIZE	2 MM
CAPACITY	PER MFR
MOTOR POWER	0.5 HP
WASHER COMPACTOR QUANTITY	1
MOTOR POWER	0.5 HP

ANOXIC ZONE

NUMBER, PER UNIT	1
VOLUME, PER UNIT	4,300 GAL
MLSS	9,600 MG/L
MIXER QUANTITY	1
TYPE	SUBMERSIBLE
MOTOR POWER	2.5 HP

AERATION ZONE

NUMBER, PER UNIT	1
VOLUME, PER UNIT	11,600 GAL
MLSS	9,600 MG/L
DIFFUSER QUANTITY, PER UNIT	44
TYPE	DISC

AERATION BLOWERS

BLOWER QUANTITY, PER UNIT	1
TYPE	REGENERATIVE
CAPACITY	PER MFR
MOTOR POWER	15 HP

FAS PUMPS

NUMBER, PER UNIT	2
TYPE	SUBMERSIBLE
CAPACITY	PER MFR
MOTOR POWER	5.5

MEMBRANES

NUMBER, PER UNIT	2
MEMBRANE TANKS, PER UNIT	2
TOTAL MEMBRANE AREA, PER UNIT	4,800 SF
TYPE	HOLLOW FIBER

MEMBRANE BLOWERS

BLOWER QUANTITY, PER UNIT	2
TYPE	REGENERATIVE
CAPACITY	PER MFR
MOTOR POWER	5.5 HP

PERMEATE PUMPS

NUMBER PER UNIT	2
TYPE	ROTARY LOBE
CAPACITY	PER MFR
MOTOR POWER	3

WAS PUMPS

NUMBER, PER UNIT	1
TYPE	PROGRESSIVE CAVITY
CAPACITY	PER MFR
MOTOR POWER	1

UV DISINFECTION

UV SYSTEM

NUMBER OF UNITS	3
TYPE	CLOSED VESSEL
FLOW RATE, EACH	PER MFR
MINIMUM UVT	65%
UV DOSE	40 MJ/CM2

FILTRATE LIFT STATION

LIFT STATION

OPERATING VOLUME	150 GAL
TOP OF LID	8321 FT

LIFT STATION PUMPS

NUMBER	2
TYPE	SUBMERSIBLE, SOLIDS HANDLING
CAPACITY	8 GPM
TDH	10 FT

BOOSTER PUMP SYSTEM

BOOSTER PUMPS

NUMBER	1
TYPE	POTABLE WATER BOOSTER
CAPACITY	40 GPM
TDH	110 FT
MOTOR POWER	2 HP

CHEMICAL FEED SYSTEMS

CITRIC ACID

STOCK CONCENTRATION	50%
SPECIFIC GRAVITY	1.2
STORAGE VOLUME, TOTAL	55 GAL
MAX DOSING RATE	PER MFR
PUMP QUANTITY, PER UNIT	2
TYPE OF PUMP	PERISTALTIC METERING

SODIUM HYPOCHLORITE

STOCK CONCENTRATION	12.50%
SPECIFIC GRAVITY	1.15
STORAGE VOLUME, TOTAL	55 GAL
MAX DOSING RATE	PER MFR
PUMP QUANTITY, PER UNIT	2
TYPE OF PUMP	PERISTALTIC METERING

CAUSTIC

STOCK CONCENTRATION	20-30%
SPECIFIC GRAVITY	1.27
STORAGE VOLUME, TOTAL	55 GAL
MAX DOSING RATE	5 GPH
PUMP QUANTITY	2
TYPE OF PUMP	PERISTALTIC METERING

CARBON

STOCK CONCENTRATION	100%
SPECIFIC GRAVITY	1.22
STORAGE VOLUME, TOTAL	55 GAL
MAX DOSING RATE	5 GPH
PUMP QUANTITY, PER UNIT	1
TYPE OF PUMP	PERISTALTIC METERING

Registered Professional Engineer (Civil) CERTIFICATE NO. 85332 CHRIS CARPENTER Date Signed 04/23/26 ARIZONA U.S.A.

A/E FIRM	DESIGNED:	SUB SHEET NO.	TITLE OF SHEET	DRAWING NO.
PRIME: HDR ENGINEERING, INC. DENVER, CO 80202	P. HAYNES	D601	GENERAL PROCESS DESIGN CRITERIA	113 182752A
	C. CONFER			PMIS/PKG NO. 318719
	TECH. REVIEW: D. ZINCHENKO			SHEET
	DATE: JUNE 2026		NORTH RIM - GRAND CANYON NATIONAL PARK	52 OF 90

Autodesk Docs://10414450_NPS_GRCA_N_Rim_Utility_2026/10350545_130_GENERAL.rvt
4/23/2026 11:16:52 AM

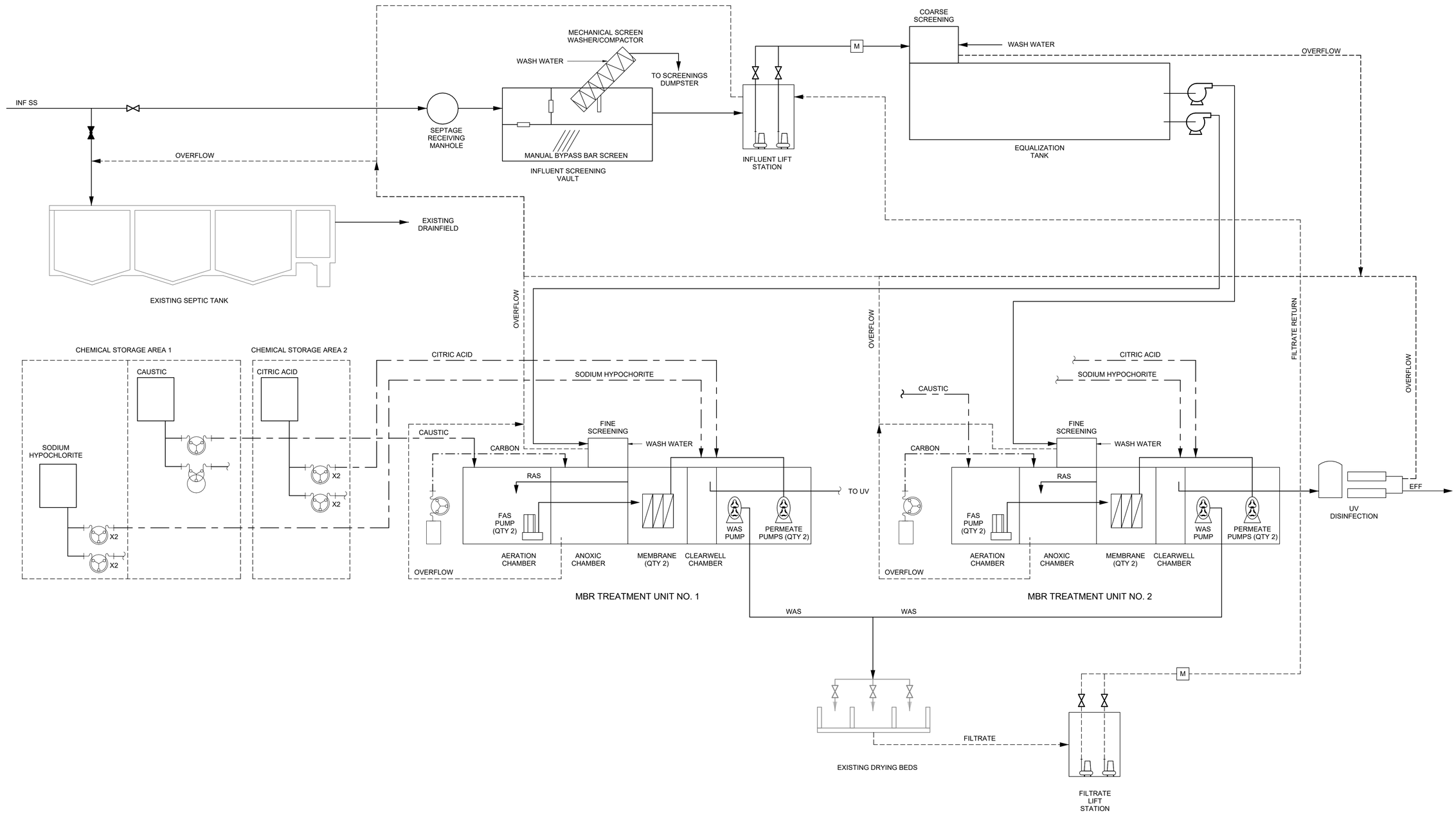

Registered Professional Engineer (Civil) CERTIFICATE NO. 85332 CHRIS CARPENTER DATE SIGNED 06/26/26 ARIZONA U.S.A.

A/E FIRM	DESIGNED:	SUB SHEET NO.	TITLE OF SHEET	DRAWING NO.
PRIME: HDR ENGINEERING, INC. DENVER, CO 80202	P. HAYNES	D602	GENERAL PROCESS FLOW DIAGRAM	113 182752A
	C. CONFER			PMIS/PKG NO. 318719
	TECH. REVIEW: D. ZINCHENKO			SHEET 53 OF 90
	DATE: JUNE 2026		NORTH RIM - GRAND CANYON NATIONAL PARK	

Autodesk Docs://10414450_NPS_GRCA_N_Rim_Utility_2026/10350545_130_GENERAL.rvt
4/24/2026 11:48:34 AM

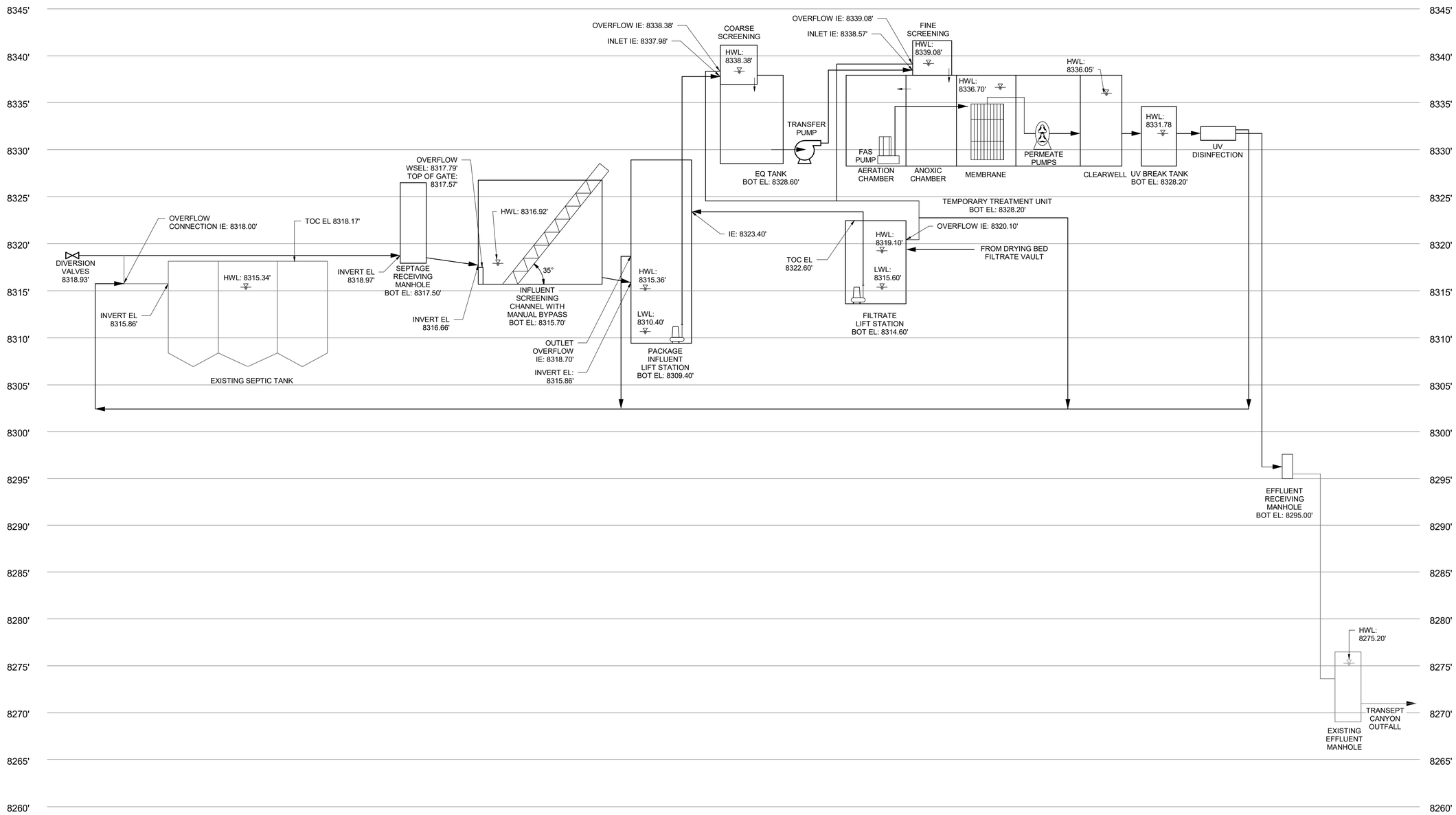

FLOWS	
MDF	9,000 GPD
AAF	60,000 GPD
MMF	86.000 GPD
PHF (PRE-EQ)	280,000 GPD
PHF (POST EQ)	172,000 GPD

GENERAL NOTES

A. CONTRACTOR TO FIELD VERIFY ALL ELEVATIONS. LISTED ELEVATIONS TO/FROM EXISTING PIPING ARE APPROXIMATE.

Registered Professional Engineer (Civil) CERTIFICATE NO. 85332 CHRIS CARPENTER DATE SIGNED ARIZONA U.S.A.

A/E FIRM	DESIGNED:	SUB SHEET NO.	TITLE OF SHEET	DRAWING NO.
PRIME: HDR ENGINEERING, INC. DENVER, CO 80202	S. MAAZ CADD C. CONFER TECH. REVIEW: D. ZINCHENKO DATE: JUNE 2026	D603	GENERAL HYDRAULIC PROFILE NORTH RIM - GRAND CANYON NATIONAL PARK	113 182752A PMIS/PKG NO. 318719 SHEET 54 OF 90

Autodesk Docs://10414450_NPS_GRCA_N_Rim_Utility_2026/10350545_130_GENERAL.rvt
4/28/2026 8:29:47 PM

GENERAL NOTES

KEYNOTES (X)

1. ROUTE AND TERMINATE FAN COIL UNIT CONDENSATE DRAIN (CD) TO 4-DRUM HDPE SPILL CONTAINMENT PALLET.
2. MOUNT FAN COIL UNIT THERMOSTAT AT APPROXIMATELY 42" ABOVE FLOOR.
3. UNIT LOCATION SHOWN IS APPROXIMATE PROVIDE UNIT WITH ADEQUATE SERVICE CLEARANCE, TYPICAL.
4. MOUNT BOTTOM OF UNIT AT APPROXIMATELY 3 FEET ABOVE GRADE.

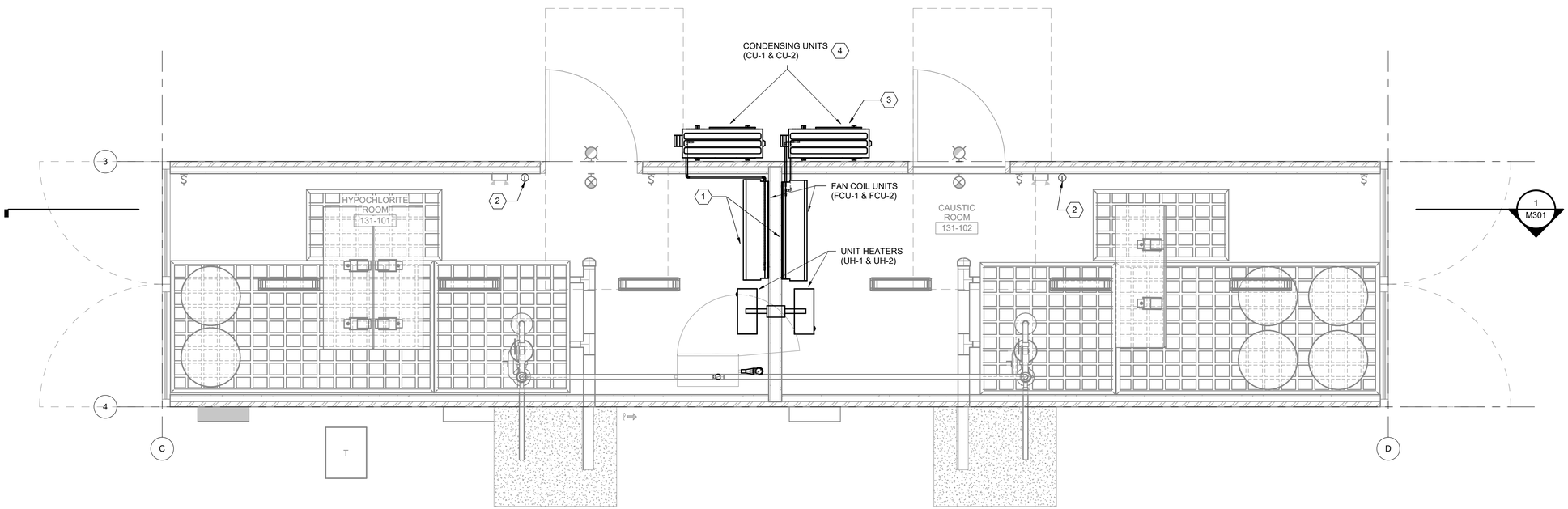

1 M101 CHEMICAL STORAGE CONTAINER 1
SCALE (A)

SCALE (A) 2 0 2 4 1/2" = 1'-0"
SCALE OF FEET

A/E FIRM	DESIGNED:	SUB SHEET NO.	TITLE OF SHEET	DRAWING NO.
PRIME: HDR ENGINEERING, INC. DENVER, CO 80202	K. CHEUNG	M101	CHEMICAL CONTAINER CHEMICAL STORAGE CONTAINER 1	113 / 182752A
	CADD N. LYNCH			PMIS/PKG NO. 318719
	TECH. REVIEW: A. PUTMAN			SHEET 55 OF 90
	DATE: JUNE 2026		NORTH RIM - GRAND CANYON NATIONAL PARK	

Registered Professional Engineer (Mechanical) CERTIFICATE NO. 65133 REGISTERED 6/12/2026 ARIZONA U.S.A.

Autodesk Docs://10414450_NPS_GRCA_N_Rim_Utility_2026/10414450_131_CHEM CONTAINER_U.rvt
6/5/2026 3:25:08 PM

GENERAL NOTES

KEYNOTES (X)

1. ROUTE AND TERMINATE FAN COIL UNIT CONDENSATE DRAIN (CD) TO 4-DRUM HDPE SPILL CONTAINMENT PALLET.
2. MOUNT FAN COIL UNIT THERMOSTAT AT APPROXIMATELY 42" ABOVE FLOOR.
3. UNIT LOCATION SHOWN IS APPROXIMATE, PROVIDE UNIT WITH ADEQUATE SERVICE CLEARANCE, TYPICAL.
4. MOUNT BOTTOM OF UNIT AT APPROXIMATELY 3 FEET ABOVE GRADE.

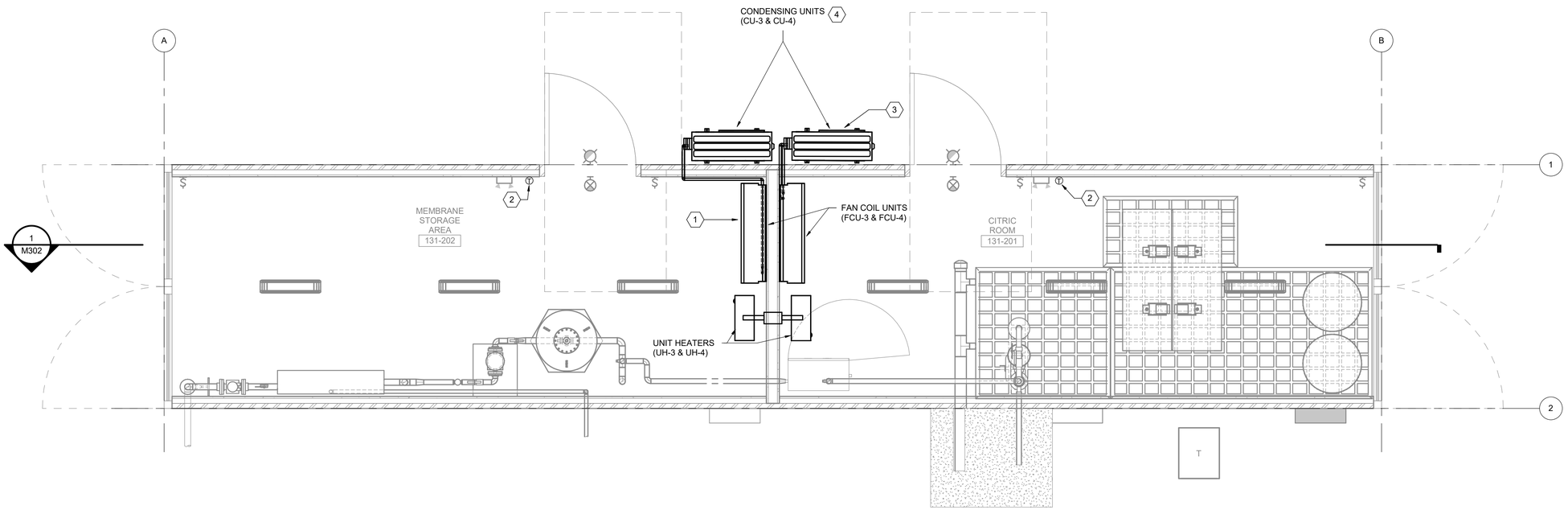

1 M102 CHEMICAL STORAGE CONTAINER 2
SCALE (A)

SCALE (A) 2 0 2 4 1/2" = 1'-0"
SCALE OF FEET

A/E FIRM	DESIGNED:	SUB SHEET NO.	TITLE OF SHEET	DRAWING NO.
PRIME: HDR ENGINEERING, INC. DENVER, CO 80202	K. CHEUNG	M102	CHEMICAL CONTAINER CHEMICAL STORAGE CONTAINER 2	113 182752A
	CADD N. LYNCH			PMIS/PKG NO. 318719
	TECH. REVIEW: A. PUTMAN			SHEET
	DATE: JUNE 2026		NORTH RIM - GRAND CANYON NATIONAL PARK	56 OF 90

Registered Professional Engineer (Mechanical) CERTIFICATE NO. 65133 ARIZONA U.S.A. REGISTERED 10-20-06

Autodesk Docs://10414450_NPS_GRCA_N_Rim_Utility_2026/10414450_131_CHEM AND STORAGE CONTAINER_U.rvt
6/5/2026 3:20:43 PM

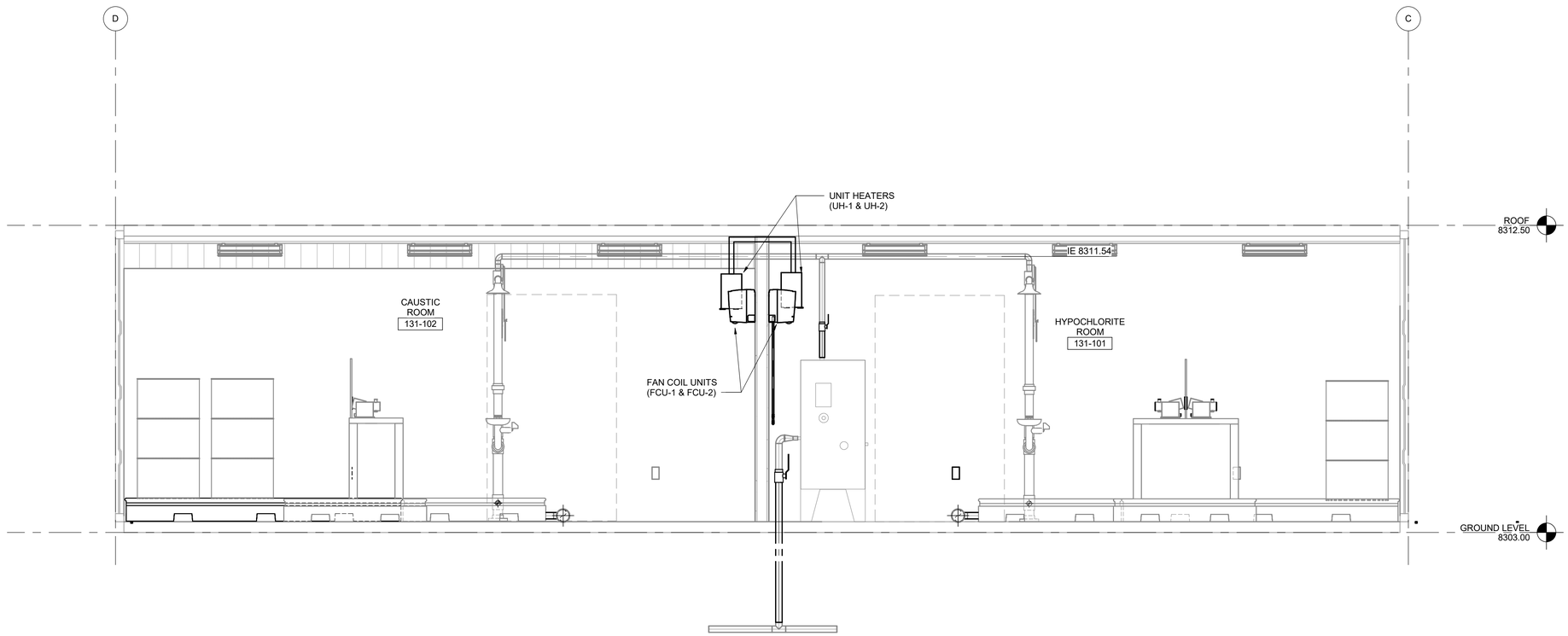

1 M301 CHEMICAL STORAGE CONTAINER 1
SCALE (A)

SCALE (A) 2 0 2 4 1/2" = 1'-0"
SCALE OF FEET

A/E FIRM	DESIGNED:	SUB SHEET NO.	TITLE OF SHEET	DRAWING NO.
PRIME: HDR ENGINEERING, INC. DENVER, CO 80202	K. CHEUNG	M301	CHEMICAL CONTAINER CHEMICAL STORAGE CONTAINER 1	113 182752A
	CADD N. LYNCH			PMIS/PKG NO. 318719
	TECH. REVIEW: A. PUTMAN			SHEET
	DATE: JUNE 2026		NORTH RIM - GRAND CANYON NATIONAL PARK	57 OF 90

Registered Professional Engineer (Mechanical) CERTIFICATE NO. 65133 REGISTERED 6/23/26 ARIZONA U.S.A.

Autodesk Docs://10414450_NPS_GRCA_N_Rim_Utility_2026/10414450_131_CHEM CONTAINER_U.rvt
4/28/2026 9:33:41 PM

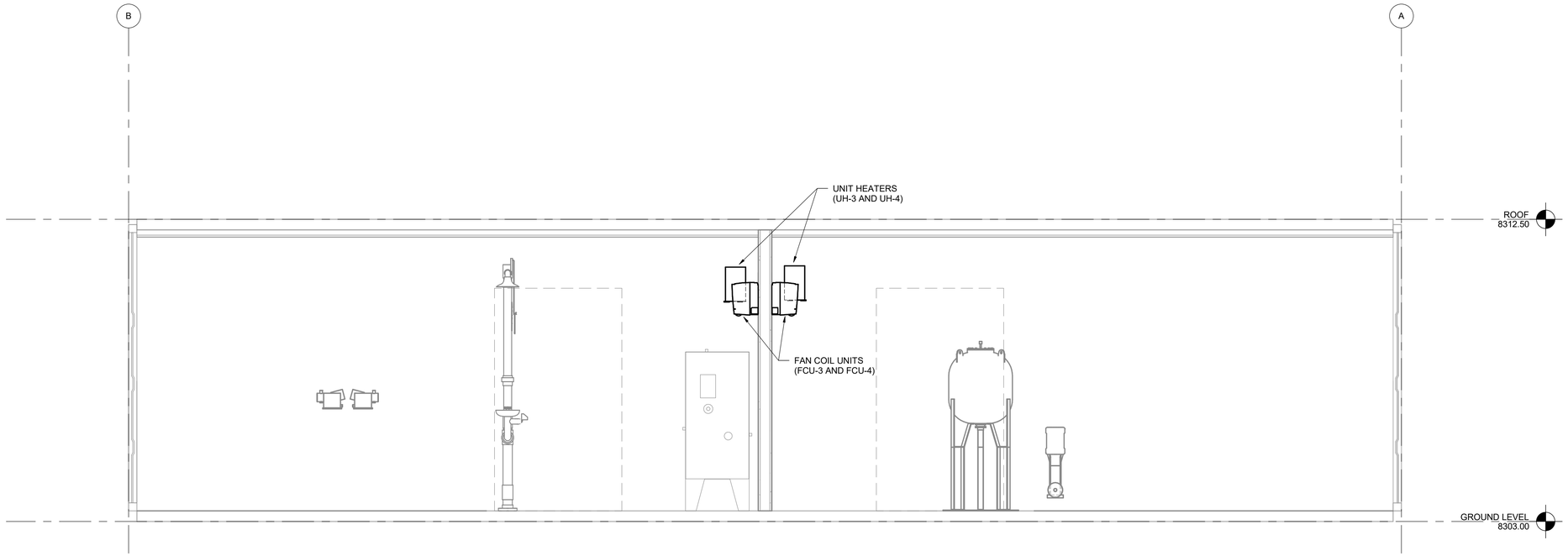

1 M302 CHEMICAL STORAGE CONTAINER 2
SCALE (A)

SCALE (A) 2 0 2 4 1/2" = 1'-0"
SCALE OF FEET

Registered Professional Engineer (Mechanical)
CERTIFICATE NO. 65133
Adam Putman
REGISTERED ARIZONA
ARIZONA U.S.A.

A/E FIRM	DESIGNED:	SUB SHEET NO.	TITLE OF SHEET	DRAWING NO.
PRIME: HDR ENGINEERING, INC. DENVER, CO 80202	K. CHEUNG	M302	CHEMICAL CONTAINER CHEMICAL STORAGE CONTAINER 2	113 182752A
	DRAWN: N. LYNCH			PMIS/PKG NO. 318719
	TECH. REVIEW: A. PUTMAN			SHEET 58 OF 90
	DATE: JUNE 2026		NORTH RIM - GRAND CANYON NATIONAL PARK	

Autodesk Docs://10414450_NPS_GRCA_N_Rim_Utility_2026/10414450_131_CHEM AND STORAGE CONTAINER_U.rvt
4/28/2026 9:35:25 PM

GENERAL NOTES

KEYNOTES (X)

1. 1-1/2" DRAINLINE (D) FOR EYEWASH. DISCHARGE ON SPRAY PAD OUTSIDE TRAILER.
2. 1-1/2" TEPID WATER (TW) TO EMERGENCY SHOWER FIXTURE.
3. 4" DRAINLINE (D). DISCHARGE ON SPRAY PAD OUTSIDE TRAILER.

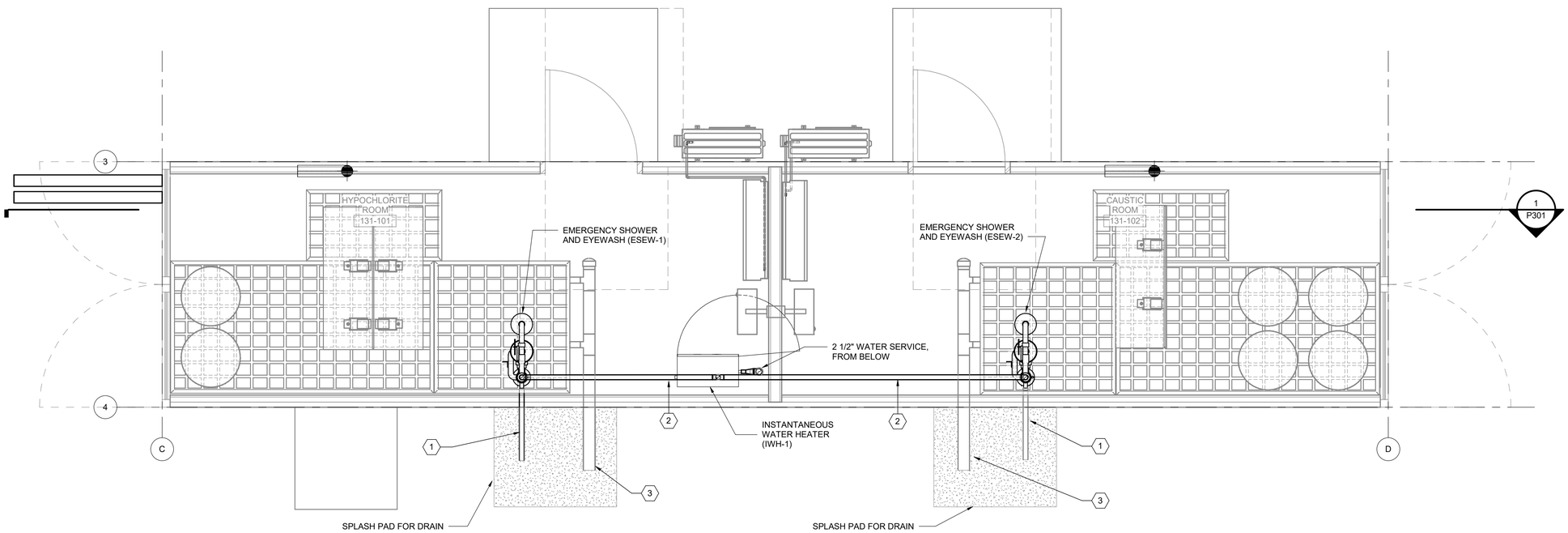

1 / A101 CHEMICAL STORAGE CONTAINER 1

SCALE (A)

SCALE (A) 2 0 2 4 1/2" = 1'-0"

SCALE OF FEET

A/E FIRM	DESIGNED:	SUB SHEET NO.	TITLE OF SHEET	DRAWING NO.
PRIME: HDR ENGINEERING, INC. DENVER, CO 80202	K. CHEUNG	P101	CHEMICAL CONTAINER CHEMICAL STORAGE CONTAINER 1	113 / 182752A
	CADD: N. LYNCH			PMIS/PKG NO. 318719
	TECH. REVIEW: A. PUTMAN			SHEET
	DATE: JUNE 2026		NORTH RIM - GRAND CANYON NATIONAL PARK	59 OF 90

Registered Professional Engineer (Mechanical) CERTIFICATE NO. 65133 REGISTERED 6/12/26 ARIZONA U.S.A.

Autodesk Docs://10414450_NPS_GRCA_N_Rim_Utility_2026/10414450_131_CHEM CONTAINER_U.rvt
4/28/2026 9:33:42 PM

GENERAL NOTES

KEYNOTES (X)

1. WATTS 2 1/2" REDUCED PRESSURE ZONE BACKFLOW PREVENTER WITH STRAINER - MODEL LF009.
2. PROVIDE 2 1/2" FLOW METER PER NPS UTILITIES APPROVED MAKE AND MODELS.
3. 1-1/2" DRAINLINE (D) FOR EYEWASH. DISCHARGE ON SPRAY PAD OUTSIDE TRAILER.
4. 2-1/2" DRAINLINE (D) FOR RPZ. DISCHARGE ON SPRAY PAD OUTSIDE TRAILER.
5. 1-1/2" DOMESTIC COLD WATER (CW) TO INSTANTANEOUS WATER HEATER.
6. 1-1/2" TEPID WATER (TW) TO EMERGENCY SHOWER FIXTURE
7. 4" DRAIN LINE (D), DISCHARGE ON SPRAY PAD OUTSIDE TRAILER.

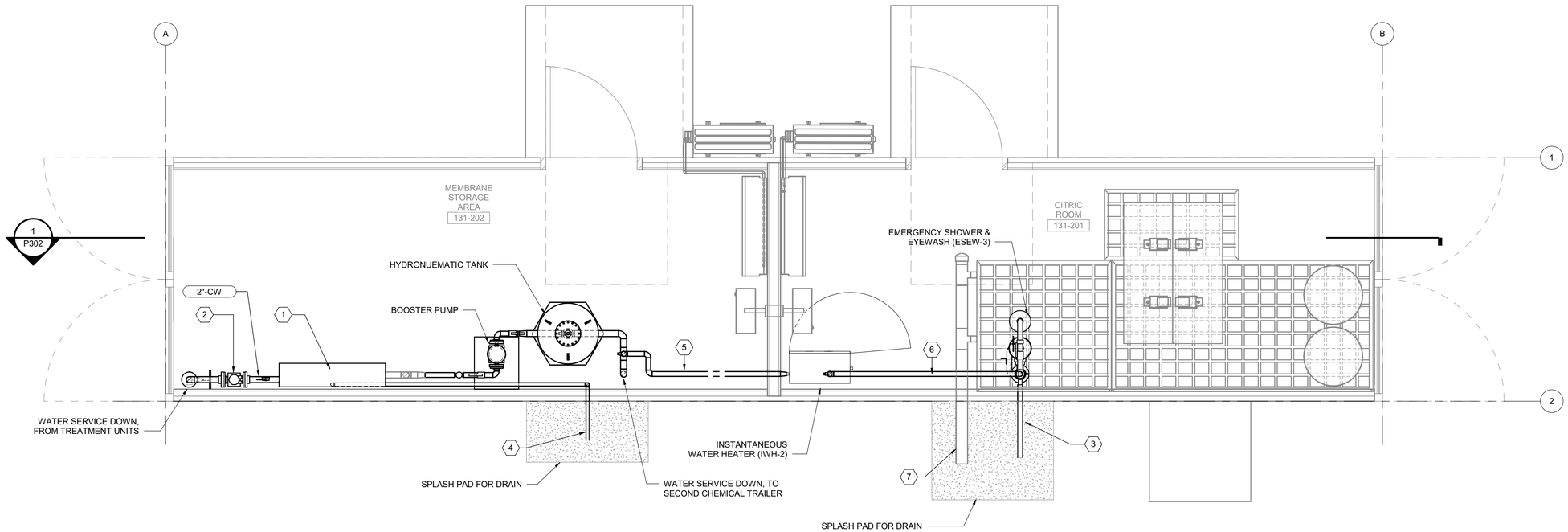

1 P102 CHEMICAL STORAGE CONTAINER 2
SCALE (A)

SCALE (A) 2 0 2 4 1/2" = 1'-0"
SCALE OF FEET

A/E FIRM	DESIGNED:	SUB SHEET NO.	TITLE OF SHEET	DRAWING NO.
PRIME: HDR ENGINEERING, INC. DENVER, CO 80202	K. CHEUNG (CADD) N. LYNCH	P102	CHEMICAL CONTAINER CHEMICAL STORAGE CONTAINER 2	113 182752A
	TECH. REVIEW: A. PUTMAN			PMIS/PKG NO. 318719
	DATE: JUNE 2026		NORTH RIM - GRAND CANYON NATIONAL PARK	SHEET 60 OF 90

Registered Professional Engineer (Mechanical) CERTIFICATE NO. 65133 REGISTERED ARIZONA U.S.A.

Autodesk Docs://10414450_NPS_GRCA_N_Rim_Utility_2026/10414450_131_CHEM AND STORAGE CONTAINER_U.rvt
4/28/2026 9:35:25 PM

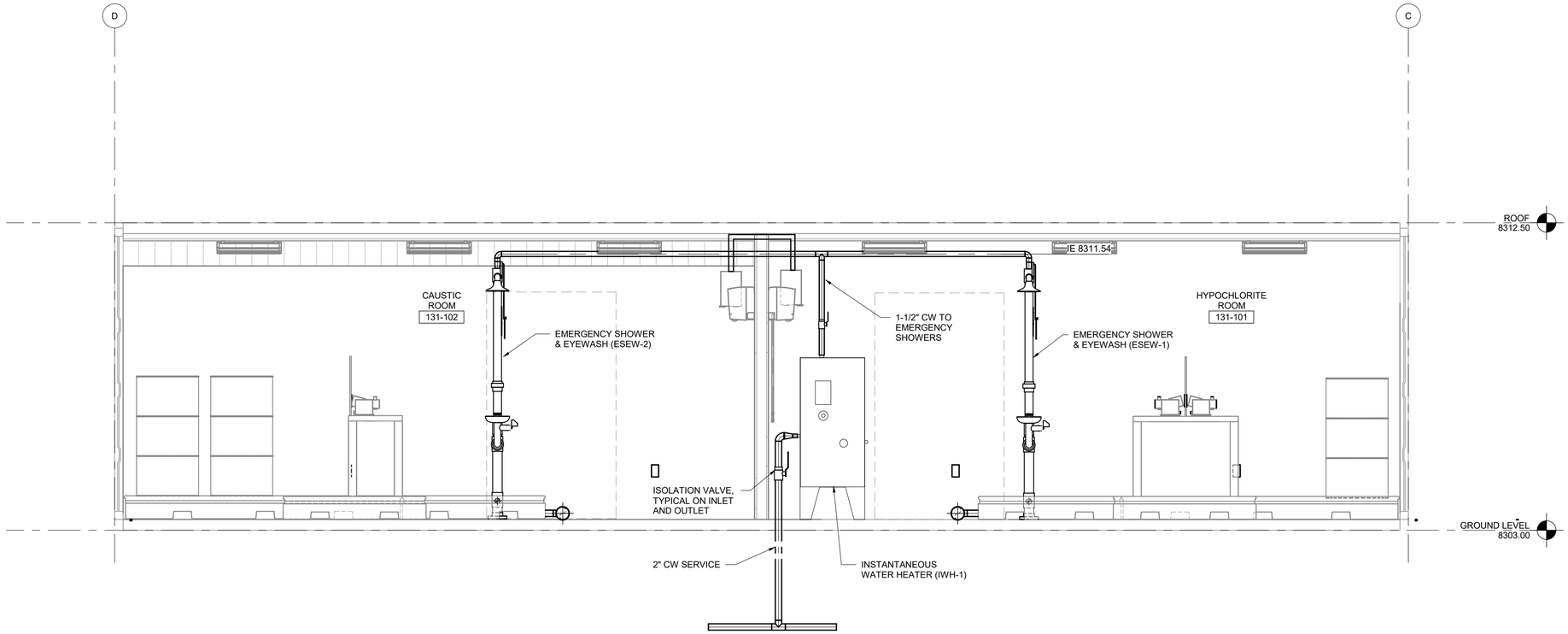

1 / P301 CHEMICAL STORAGE CONTAINER 1
SCALE (A)

SCALE (A) 2 0 2 4 1/2" = 1'-0"
SCALE OF FEET

Registered Professional Engineer (Architect)
CERTIFICATE NO. 65133
Adam Putman
REGISTERED ARCHITECT
ARIZONA U.S.A.

A/E FIRM	DESIGNED:	SUB SHEET NO.	TITLE OF SHEET	DRAWING NO.
PRIME: HDR ENGINEERING, INC. DENVER, CO 80202	K. CHEUNG	P301	CHEMICAL CONTAINER CHEMICAL STORAGE CONTAINER 1	113 182752A
	CADD N. LYNCH			PMIS/PKG NO. 318719
	TECH. REVIEW: A. PUTMAN			SHEET
	DATE: JUNE 2026		NORTH RIM - GRAND CANYON NATIONAL PARK	61 OF 90

Autodesk Docs://10414450_NPS_GRCA_N_Rim_Utility_2026/10414450_131_CHEM CONTAINER_U.rvt
4/28/2026 9:33:43 PM

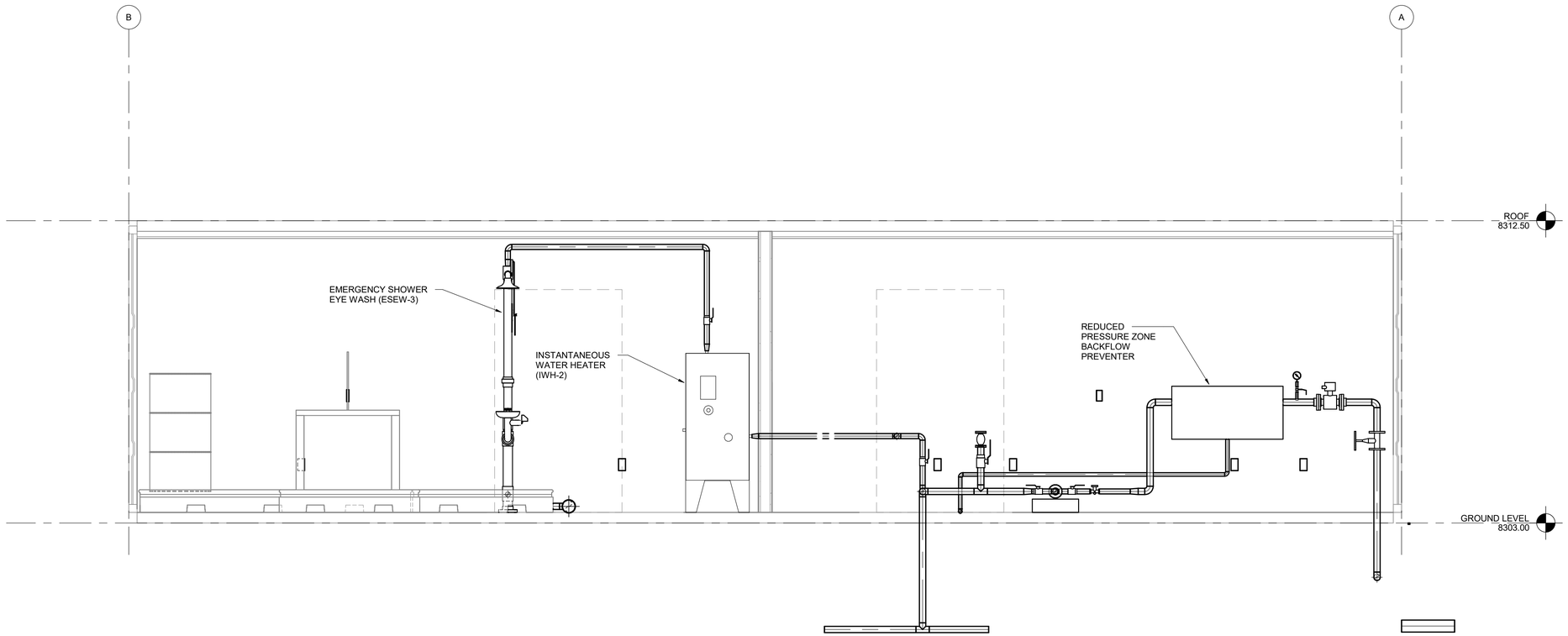

1 / P102 MAINTENANCE AND CITRIC ACID CHEMICAL STORAGE CONTAINER - SECTION

SCALE (A)

SCALE (A) 2 0 2 4 1/2" = 1'-0"

SCALE OF FEET

Registered Professional Engineer (Architect)
CERTIFICATE NO. 65133
Adam Putman
SIGNATURE
ARIZONA U.S.A.

A/E FIRM	DESIGNED:	SUB SHEET NO.	TITLE OF SHEET	DRAWING NO.
PRIME: HDR ENGINEERING, INC. DENVER, CO 80202	K. CHEUNG	P302	CHEMICAL CONTAINER CHEMICAL STORAGE CONTAINER 2	113 182752A
	CADD N. LYNCH			PMIS/PKG NO. 318719
	TECH. REVIEW: A. PUTMAN			SHEET
	DATE: JUNE 2026		NORTH RIM - GRAND CANYON NATIONAL PARK	62 OF 90

Autodesk Docs://10414450_NPS_GRCA_N_Rim_Utility_2026/10414450_131_CHEM AND STORAGE CONTAINER_U.rvt
4/28/2026 9:35:26 PM

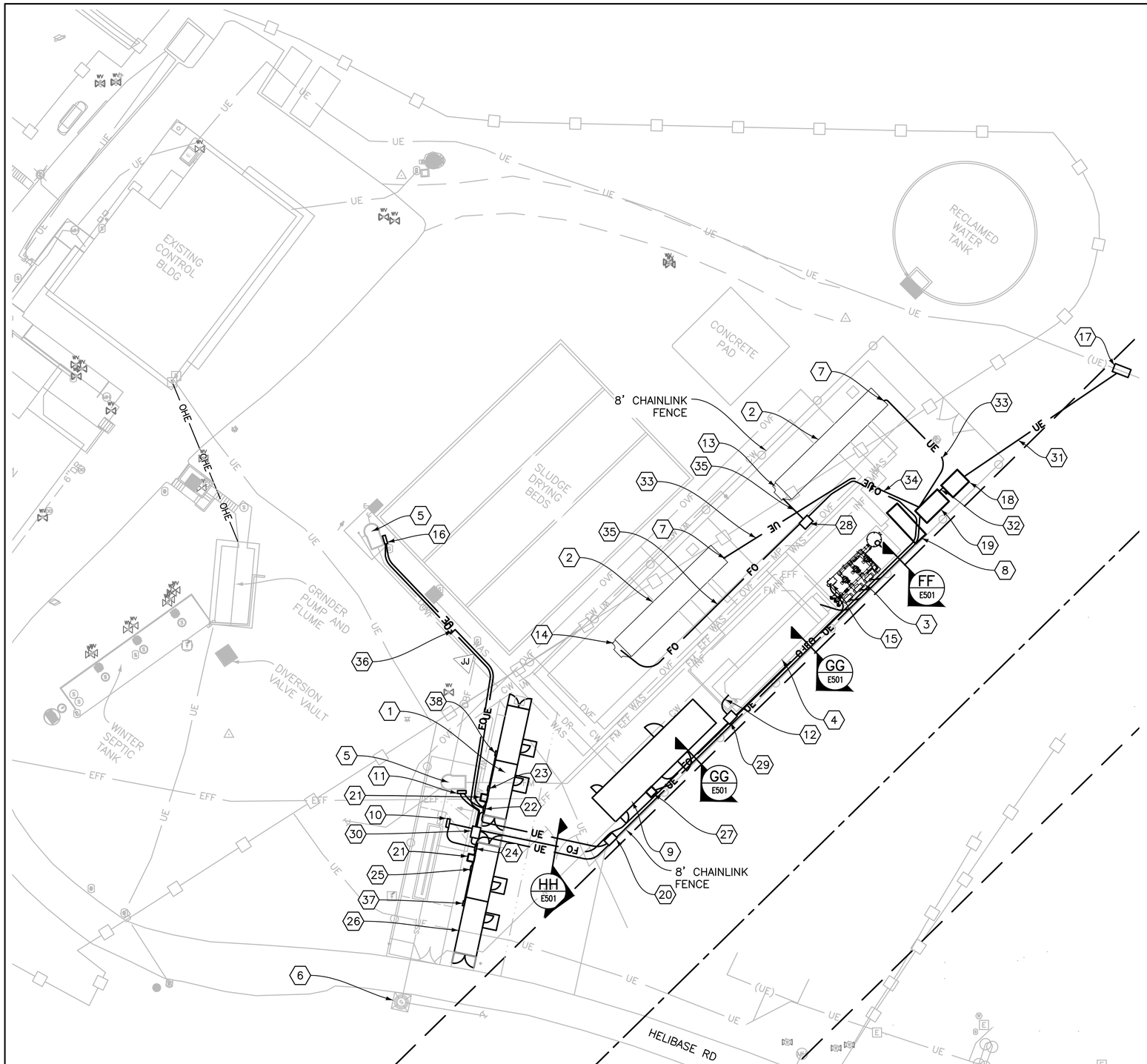

NOTE:

A. SEE SHEETS C101 – C102 FOR SURVEY CONTROL AND POTHOLE INFORMATION.

B. CABLE ROUTING AND POWER EQUIPMENT LOCATIONS ARE APPROXIMATE. FINAL CABLE ROUTING AND EQUIPMENT LOCATIONS TO BE VERIFIED BY CONTRACTOR.

C. ALL FIBER TO BE 24–STRAND SINGLEMODE.

D. SEE SHEET E501 FOR TRENCH AND CONDUIT DETAILS.

KEY NOTES: (X)

1. 40'X8' CONEX STORAGE CONTAINER (RETROFITTED). – CITRIC ROOM / STORAGE ROOM
2. MOBILE WASTEWATER TREATMENT UNIT.
3. TERMINATE POWER CABLE AT MANUFACTURE PROVIDED POWER CONNECTION FOR MOBILE UV DISINFECTION UNIT.
4. TERMINATE POWER CABLE AT MANUFACTURE PROVIDED POWER CONNECTION FOR MOBILE EQ TANK UNIT.
5. 5' DIA. LIFT STATION.
6. 48" SEPTAGE RECEIVING MANHOLE.
7. MOBILE WASTEWATER TREATMENT UNIT MANUFACTURER TO PROVIDE POWER CONNECTION POINT. TERMINATE POWER CABLE AT MANUFACTURED PROVIDED POWER CONNECTION.
8. 15' X 5' PORTABLE GENERATOR PAD.
9. 40'x8' WASTEWATER LAB.
10. TERMINATE POWER CABLE AND FIBER AT SCREENING SYSTEM CONTROL PANEL.
11. INTERIOR OF LIFT STATION WETWELL IS A CLASS I, DIVISION 1 HAZARDOUS AREA PER NFPA 820. A CLASS I, DIVISION 2 HAZARDOUS AREA EXTENDS 5FT BEYOND ANY OPENING IN THE LIFT STATION, INCLUDING HATCHES AND VENTS. INSTALL LIFT STATION IN A NON–HAZARDOUS AREA, MINIMUM 6FT FROM THE LIFT STATION. INSTALL CONDUIT SEAL FITTINGS BETWEEN THE LIFT STATION CONTROL PANEL AND THE WETWELL TO PREVENT MOVEMENT OF HAZARDOUS GASES. CONFIRM MATERIALS AND INSTALLATION MEETS REQUIREMENTS FOR CLASS I, DIVISION 1 LOCATIONS PER NEC AND NFPA 820. TERMINATE POWER CABLE AND FIBER AT INFLUENT LIFT STATION CONTROL PANEL.
12. TERMINATE FIBER AT EQ RIO CONTROL PANEL. SEE TRENCH DETAIL DD ON SHEET E501 FOR INCOMING FIBER.
13. TERMINATE FIBER AT MBR UNIT 1 CONTROL PANEL.
14. TERMINATE FIBER MBR UNIT 2 CONTROL PANEL.
15. TERMINATE FIBER AT UV RIO CONTROL PANEL.
16. INTERIOR OF LIFT STATION WETWELL IS A CLASS I, DIVISION 1 HAZARDOUS AREA PER NFPA 820. A CLASS I, DIVISION 2 HAZARDOUS AREA EXTENDS 5FT BEYOND ANY OPENING IN THE LIFT STATION, INCLUDING HATCHES AND VENTS. INSTALL LIFT STATION IN A NON–HAZARDOUS AREA, MINIMUM 6FT FROM THE LIFT STATION. INSTALL CONDUIT SEAL FITTINGS BETWEEN THE LIFT STATION CONTROL PANEL AND THE WETWELL TO PREVENT MOVEMENT OF HAZARDOUS GASES. CONFIRM MATERIALS AND INSTALLATION MEETS REQUIREMENTS FOR CLASS I, DIVISION 1 LOCATIONS PER NEC AND NFPA 820. TERMINATE POWER CABLE AND FIBER AT FILTRATE LIFT STATION CONTROL PANEL.
17. INTERCEPT EXISTING MEDIUM VOLTAGE POWER CABLE FROM POWER DISTRIBUTION CENTER TO WASTE WATER TREATMENT PLANT. EXPOSE AND CUT EXIST MEDIUM VOLTAGE POWER CABLE. SET 3–PHASE JUNCTION ENCLOSURE WITH (3) 4 POSITION JUNCTION BARS. TERMINATE MEDIUM VOLTAGE POWER CABLE WITH 200AMP LOAD BREAK ELBOWS. ABANDON EXIST MEDIUM VOLTAGE POWER FROM INTERCEPTION POINT TO WASTE WATER TREATMENT PLANT.
18. INSTALL 750kVA 24.94kV–480/277Y TRANSFORMER WITH TRANSFORMER DOORS OPENING NORTHWEST. TERMINATE MEDIUM VOLTAGE CABLE FROM JUNCTION ENCLOSURE WITH 200 AMP ELBOW TERMINATIONS. INSTALL 15kV SURGE ARRESTER ELBOWS ON UNUSED TAPS.

KEY NOTES (CONT'D): (X)

19. INSTALL 1000AMP MAIN CIRCUIT BREAKER AND 1000AMP 480/277V TRANSFER SWITCH. SET EQUIPMENT FOR DOORS TO OPEN NORTHWEST TOWARDS MBR UNIT. OWNER TO SUPPLY PORTABLE BACKUP GENERATOR.
20. 30"W X 48"L X 24"H ELECTRICAL HANDHOLE. (HH1)
21. 30KVA DRY TYPE 480–208/120V.
22. 480/277VAC 3Ø, 4W MAIN CIRCUIT BOARD (MCB3)
23. 208/120VAC 3Ø, 4W 100A PANEL BOARD (PB1)
24. 480/277VAC 3Ø, 4W MAIN CIRCUIT BOARD (MCB4)
25. 208/120VAC 3Ø, 4W 100A PANEL BOARD (PB2)
26. 40'X8' CONEX STORAGE CONTAINER (RETROFITTED). –HYPOCHLORITE / CAUSTIC CONTAINER
27. 150KVA DRY TYPE 480–208/120V. SET DRY TYPE TRANSFORMER WITH FRONT OF UNIT FACING SOUTHWEST PARALLEL WITH LAB. MAINTAIN 6" OF CLEARANCE FROM LAB WALL
28. SET 36"W X 48"L X 36"D COMMUNICATION HANDHOLE (CH1). INSTALL 4–WAY FIBER MICRODUCT FROM HANDHOLE TO MOBILE WASTEWATER TREATMENT UNITS AND COMMUNICATION HAND HOLE CH2. COORDINATE FINAL CONNECTION POINTS WITH MOBILE WASTEWATER TREATMENT MANUFACTURER.
29. SET 36"W X 48"L X 36"D COMMUNICATION HANDHOLE (CH2). INSTALL 4–WAY FIBER MICRODUCT FROM HANDHOLE TO COMMUNICATION INTERCEPTION POINT AT WW LAB, EQ CONTROL PANEL, UV CONTROL PANEL, CH1, AND CH3. COORDINATE FINAL CONNECTION POINTS WITH WW LAB, EQ, UV MANUFACTURE.
30. SET 36"W X 48"L X 36"D COMMUNICATION HANDHOLE (CH3). INSTALL 4–WAY MICRODUCT FROM HANDHOLE TO LIFT STATION CONTROL PANELS, SCREENING SYSTEM CONTROL PANEL, CONNEX STORAGE CONTAINERS, AND CH2. COORDINATE FINAL CONNECTION POINTS WITH CONNEX STORAGE CONTAINERS WITH CONNEX MANUFACTURER.
31. SEE TRENCH DETAIL BB ON SHEET E501 FOR TRENCH BETWEEN JUNCTION ENCLOSURE AND 3Ø TRANSFORMER.
32. SEE TRENCH DETAIL AA ON SHEET E501 FOR TRENCH BETWEEN 3Ø TRANSFORMER AND TRANSFER SWITCH.
33. SEE TRENCH DETAIL CC ON SHEET E501.
34. SEE TRENCH DETAIL II ON SHEET E501.
35. SEE TRENCH DETAIL EE ON SHEET E501.
36. SEE TRENCH DETAIL JJ ON SHEET E501.
37. 208/120VAC 3Ø, 4W 100AMP PANEL BOARD (PB4)
38. 208/120VAC 3Ø, 4W 100AMP PANEL BOARD (PB3)

20 0 20 40
SCALE OF FEET

REGISTERED PROFESSIONAL ENGINEER (ELECTRICAL) CERTIFICATE NO. 75014 TOU VANG Date Signed 06/10/26 ARIZONA, U.S.A.

A/E FIRM	DESIGNED:	SUB SHEET NO.	TITLE OF SHEET	DRAWING NO.
PRIME: HDR ENGINEERING, INC. DENVER, CO 80202	T. VANG	E103	ELECTRICAL TEMPORARY WWTP OVERALL ELECTRICAL SITE PLAN	113 182752A
	CADD T. VANG			PMIS/PKG NO. 318719
	TECH. REVIEW: T. MOORE			SHEET
	DATE: JUNE 2026		NORTH RIM – GRAND CANYON NATIONAL PARK	63 OF 90

6/10/2026 Vang, Tou C:\Users\TVANG\DC\ACCDocs\HDR\10350545_NPS_GRCA_N_Rim_Utility_2022\Project Files\CAD_HDR\DRAWINGS\TEMPORARY WASTEWATER\ELECTRICAL\E103.dwg

GENERAL NOTES:

1. ROUTE CONDUIT FROM 480V MCB TO DRY TYPE TRANSFORMER AND FROM TRANSFORMER TO 208V PANEL ON EXTERNAL WALL.
2. ROUTE ALL ELECTRICAL WIRING FROM T2B TO PB4 ON EXTERNAL BUILDING WALL. DO NOT PENETRATE INTERNAL BUILDING WALL SEPARATING THE TWO ROOMS FOR ELECTRICAL ROUTING.
3. ROUTE ALL COMMUNICATION BETWEEN CONTAINERS ON EXTERNAL BUILDING WALL. DO NOT PENETRATE INTERNAL BUILDING WALL SEPARATING THE TWO ROOMS FOR COMMUNICATION ROUTING.

KEYNOTES (X)

1 10FT X 3/4INCH COPPER-CLAD STEEL GROUND ROD.

2 GROUND ROD WITH GROUNDING TEST WELL.

3 #4/0 AWG BOND TO BUILDING, PIPING AND SYSTEMS PER NEC.

4 #4/0 AWG SOFT-DRAWN BARE COPPER GROUND RING.

5 TRENCH GROUND LOOP 3FT AWAY FROM BUILDING WALL, MINIMUM 30 INCHES DEEP.

6 SIMPLEX RECEPTACLE WITH A WEATHERPROOF IN-USE COVER, FED FROM A DEDICATED GFCI BREAKER IN THE ELECTRICAL PANEL.

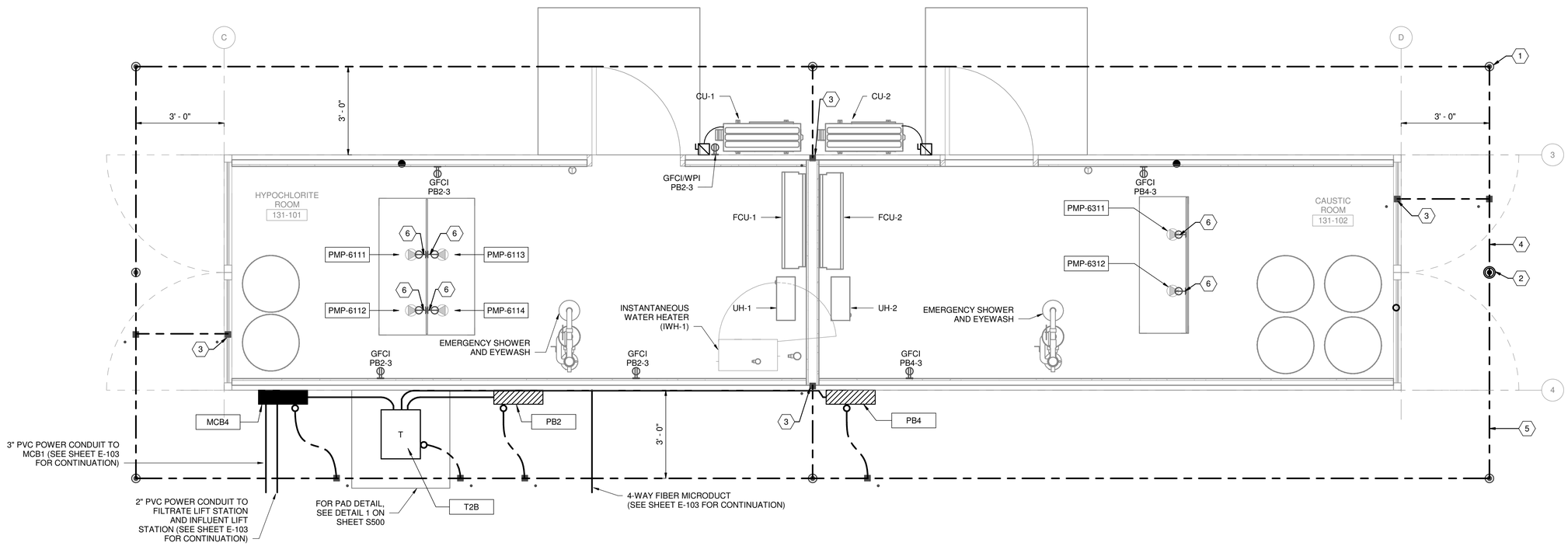

1 / E111 HYPOCHLORITE AND CAUSTIC CHEMICAL STORAGE CONTAINER - CHEMICAL STORAGE CONTAINER 1 ELECTRICAL POWER PLAN
SCALE (A)

SCALE (A) 2 0 2 4 1/2" = 1'-0"
SCALE OF FEET

REGISTERED PROFESSIONAL ENGINEER CERTIFICATE NO. 75014 TOU VANG Date Signed 06/10/2026 ARIZONA, U.S.A.

A/E FIRM	DESIGNED:	SUB SHEET NO.	TITLE OF SHEET	DRAWING NO.
PRIME: HDR ENGINEERING, INC. DENVER, CO 80202	T. VANG CADD S. BILD TECH. REVIEW: T. MOORE DATE: JUNE 2026	E111	CHEMICAL CONTAINER CHEMICAL STORAGE CONTAINER 1 POWER PLAN NORTH RIM - GRAND CANYON NATIONAL PARK	113 182752A PMIS/PKG NO. 318719 SHEET 64 OF 90

Autodesk Docs://10414450_NPS_GRCA_N_Rim_Utility_2026/10414450_131_CHEM CONTAINER_U.rvt
6/10/2026 11:15:57 AM

GENERAL NOTES:

1. ROUTE CONDUIT FROM 480V MCB TO DRY TYPE TRANSFORMER AND FROM TRANSFORMER TO 208V PANEL ON EXTERNAL WALL.
2. ROUTE ALL ELECTRICAL WIRING FROM T1B TO PB3 ON EXTERNAL BUILDING WALL. DO NOT PENETRATE INTERNAL BUILDING WALL SEPARATING THE TWO ROOMS FOR ELECTRICAL ROUTING.
3. ROUTE ALL COMMUNICATION BETWEEN CONTAINERS ON EXTERNAL BUILDING WALL. DO NOT PENETRATE INTERNAL BUILDING WALL SEPARATING THE TWO ROOMS FOR COMMUNICATION ROUTING.

KEYNOTES (X)

1 10FT X 3/4INCH COPPER-CLAD STEEL GROUND ROD.

2 GROUND ROD WITH GROUNDING TEST WELL.

3 #4/0 AWG BOND TO BUILDING, PIPING AND SYSTEMS PER NEC.

4 #4/0 AWG SOFT-DRAWN BARE COPPER GROUND RING.

5 TRENCH GROUND LOOP 3FT AWAY FROM BUILDING WALL, MINIMUM 30 INCHES DEEP.

6 SIMPLEX RECEPTACLE WITH A WEATHERPROOF IN-USE COVER, FED FROM A DEDICATED GFCI BREAKER IN THE ELECTRICAL PANEL.

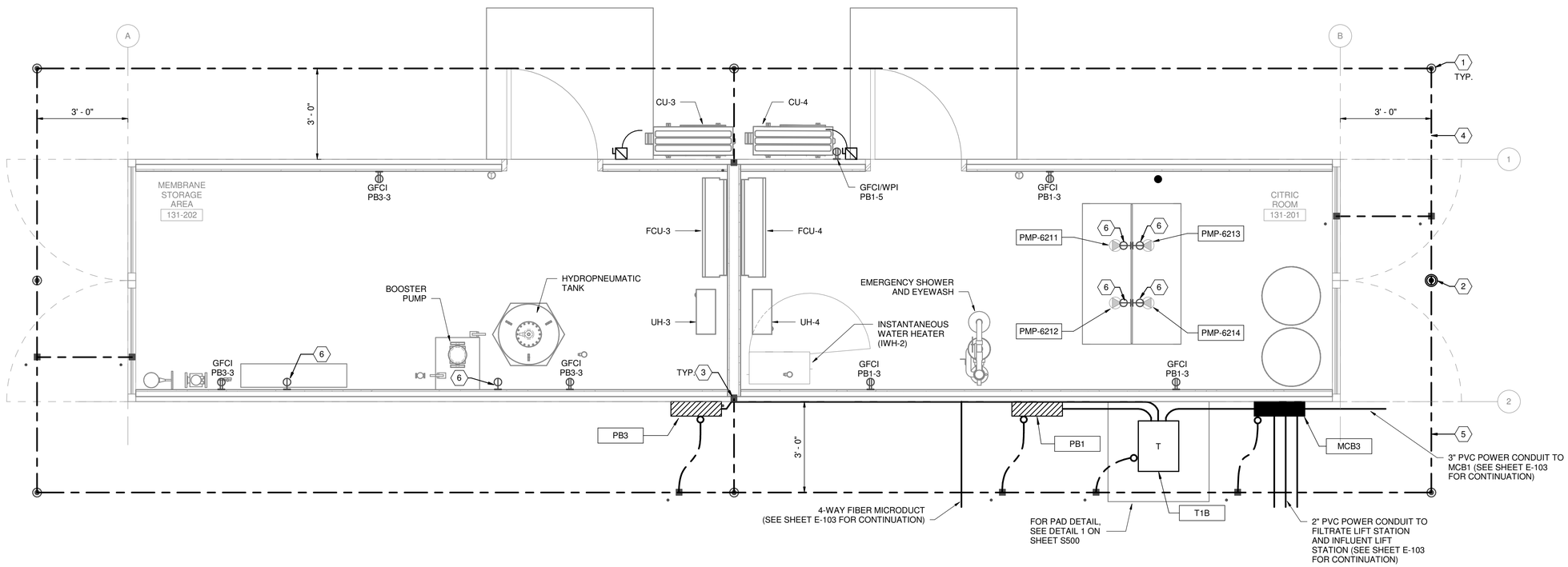

1 / E112 MAINTENANCE AND CITRIC ACID CHEMICAL STORAGE CONTAINER - ELECTRICAL POWER PLAN

SCALE (A)

SCALE (A) 2 0 2 4 1/2" = 1'-0"

SCALE OF FEET

REGISTERED PROFESSIONAL ENGINEER (ELECTRICAL) CERTIFICATE NO. 75014 TOU VANG Date Signed 06/02/2026 ARIZONA, U.S.A.

A/E FIRM	DESIGNED:	SUB SHEET NO.	TITLE OF SHEET	DRAWING NO.
PRIME: HDR ENGINEERING, INC. DENVER, CO 80202	T. VANG	E112	ELECTRICAL CHEMICAL STORAGE CONTAINER 2 POWER PLAN	113 182752A
	CADD S. BILD			PMIS/PKG NO. 318719
	TECH. REVIEW: T. MOORE			SHEET
	DATE: JUNE 2026		NORTH RIM - GRAND CANYON NATIONAL PARK	65 OF 90

Autodesk Docs://10414450_NPS_GRCA_N_Rim_Utility_2026/10414450_131_CHEM AND STORAGE CONTAINER_U.rvt
6/10/2026 11:18:17 AM

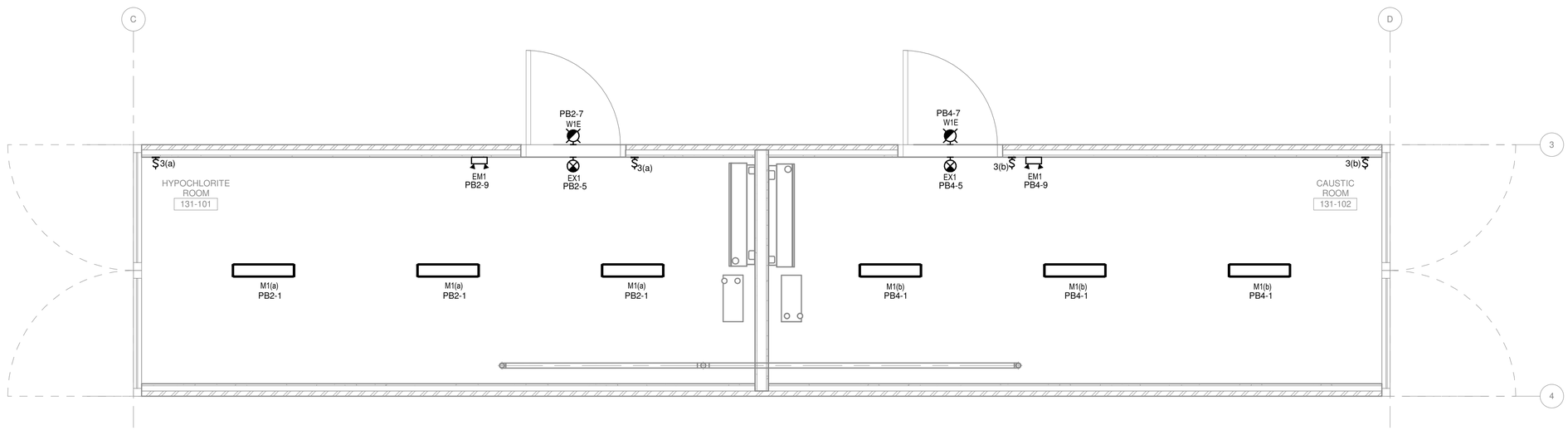

1 E121 CHEMICAL STORAGE CONTAINER 1 ELECTRICAL LIGHTING PLAN
SCALE A

SCALE A 2 0 2 4 1/2" = 1'-0"
SCALE OF FEET

REGISTERED PROFESSIONAL ENGINEER (ELECTRICAL) CERTIFICATE NO. 75014 TOU VANG Date Signed 06/02/2026 ARIZONA, U.S.A.

A/E FIRM	DESIGNED:	SUB SHEET NO.	TITLE OF SHEET	DRAWING NO.
PRIME: HDR ENGINEERING, INC. DENVER, CO 80202	T. VANG CADD S. BILD TECH. REVIEW: T. MOORE DATE: JUNE 2026	E121	CHEMICAL CONTAINER CHEMICAL STORAGE CONTAINER 1 LIGHTING PLAN NORTH RIM - GRAND CANYON NATIONAL PARK	113 182752A PMIS/PKG NO. 318719 SHEET 66 OF 90

Autodesk Docs://10414450_NPS_GRCA_N_Rim_Utility_2026/10414450_131_CHEM CONTAINER_U.rvt
6/10/2026 11:20:20 AM

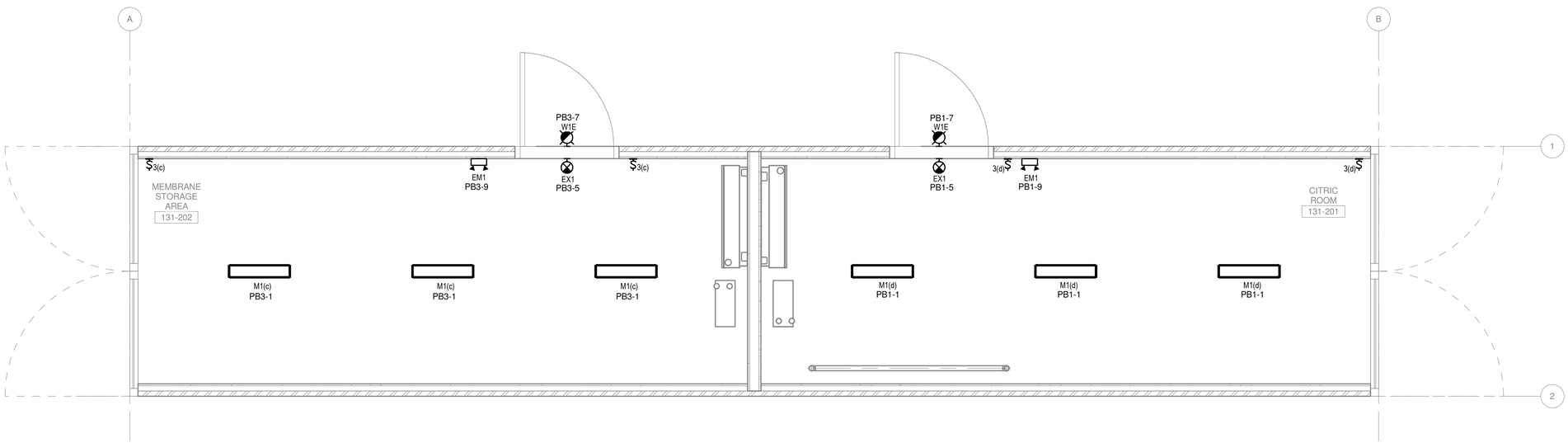

1 / E122 CHEMICAL STORAGE CONTAINER 2 ELECTRICAL LIGHTING PLAN
SCALE A

SCALE A 2 0 2 4 1/2" = 1'-0"
SCALE OF FEET

REGISTERED PROFESSIONAL ENGINEER (ELECTRICAL)
CERTIFICATE NO. 75014
TOU VANG
Date Signed 06/10/26
ARIZONA, U.S.A.

A/E FIRM	DESIGNED:	SUB SHEET NO.	TITLE OF SHEET	DRAWING NO.
PRIME: HDR ENGINEERING, INC. DENVER, CO 80202	T. VANG	E122	ELECTRICAL CHEMICAL STORAGE CONTAINER 2 LIGHTING PLAN	113 182752A
	DRAWN: S. BILD			PMIS/PKG NO. 318719
	TECH. REVIEW: T. MOORE			SHEET
	DATE: JUNE 2026		NORTH RIM - GRAND CANYON NATIONAL PARK	67 OF 90

Autodesk Docs://10414450_NPS_GRCA_N_Rim_Utility_2026/10414450_131_CHEM AND STORAGE CONTAINER_U.rvt
6/10/2026 11:22:20 AM

KEYNOTES: (X)

1. 1000AMP 480V/277 MANUALLY OPERATED TRANSFORMER SWITCH (MTS) WITH SEPARATE COMPARTMENT FOR CAM LOCK TYPE CONNECTIONS FOR PORTABLE GENERATOR. SIZE CABLE TERMINATIONS AND CABLE ENTRANCE TO ACCEPT POWER CABLES.
2. MINIMUM 1000AMP 480/277VAC 3-PHASE, 4 WIRE NEMA 3R SWITCHBOARD.
3. 3-PHASE 24.9KV-480/277V 750KVA PADMOUNT TRANSFORMER

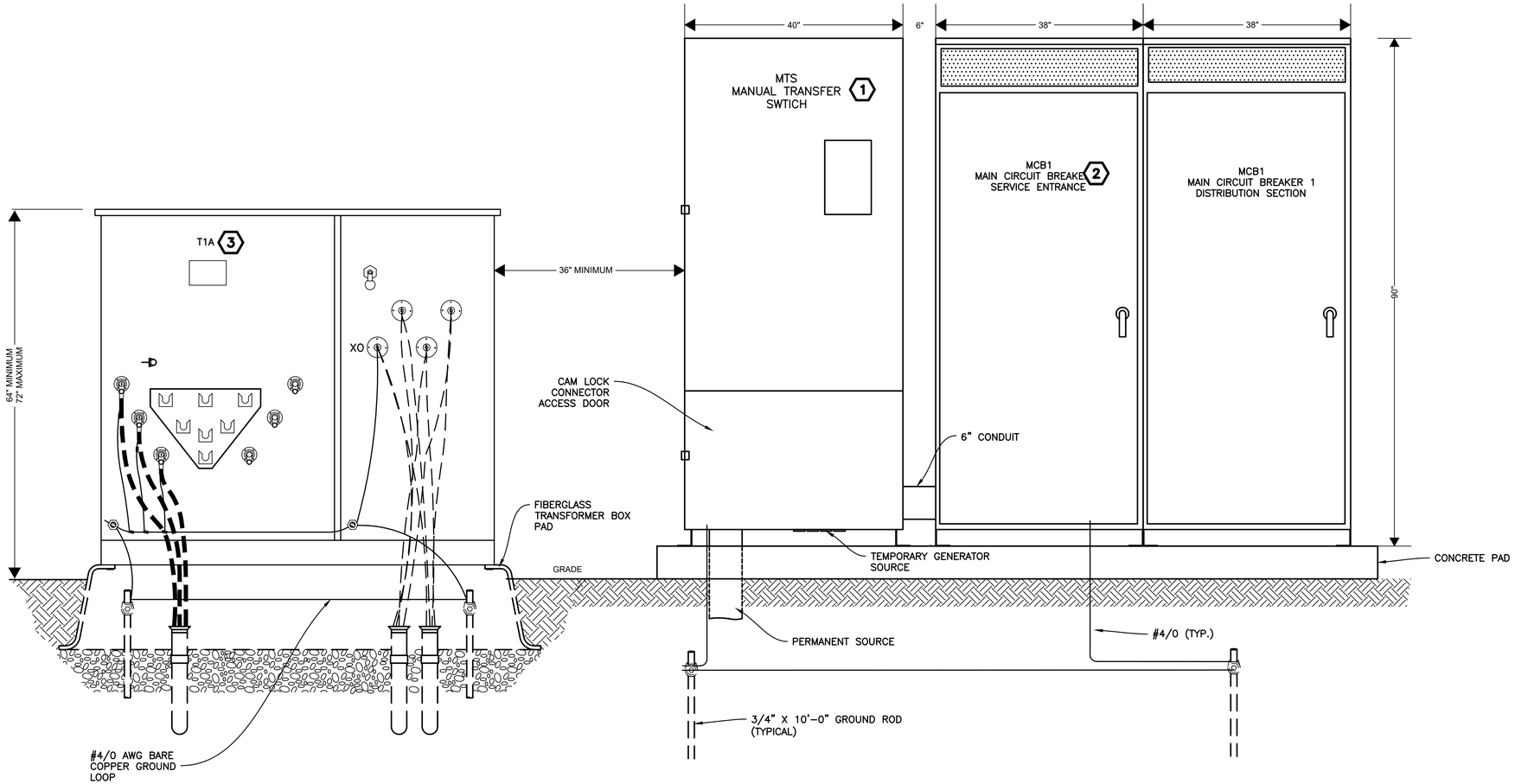

1 / E201 3PH PADMOUNTED TRANSFORMER / TRANSFER SWITCH / MCCB ELEVATION DETAIL

SCALE N.T.S.

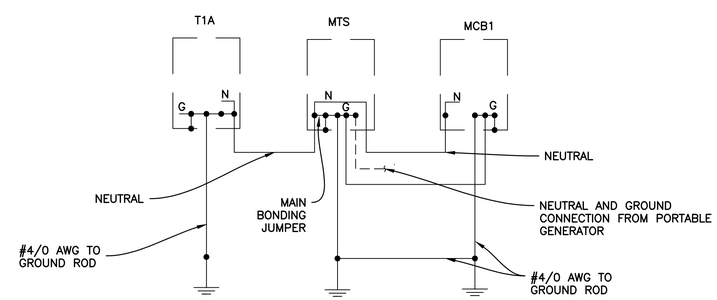

2 / E201 T1A, MTS, & MCB PANEL GROUNDING/NEUTRAL DIAGRAM

SCALE N.T.S.

REGISTERED PROFESSIONAL ENGINEER (ELECTRICAL) CERTIFICATE NO. 75014 TOU VANG Date Signed 06/11/2026 ARIZONA, U.S.A.

A/E FIRM	DESIGNED:	SUB SHEET NO.	TITLE OF SHEET	DRAWING NO.
PRIME: HDR ENGINEERING, INC. DENVER, CO 80202	T. VANG CADD T. VANG TECH. REVIEW: T. MOORE DATE: JUNE 2026	E201	ELECTRICAL TEMPORARY WWTP ELEVATION DETAIL T1A & MCB1 NORTH RIM – GRAND CANYON NATIONAL PARK	113 182752A PMIS/PKG NO. 318719 SHEET 68 OF 90

6/11/2026 Lynch, Nicole C:\Users\nlynch\DC\ACCDocs\HDR\10414450_NPS_GRCA_N_Rim_Utility_2026\Project Files\CAD_HDR\DRAWINGS\TEMPORARY WASTEWATER\ELECTRICAL\E201.dwg

KEYNOTES: (X)

1. TRANSFORMER PAD TO BE POUR IN PLACE, PRECAST, OR FIBERGLASS SLEEVE.
2. CONTRACTOR TO CUT CONCRETE PAD AS NEEDED FOR CONDUIT STUB UPS INTO EQUIPMENT.
3. 15' X 5' (180"X60") PORTABLE GENERATOR PAD.

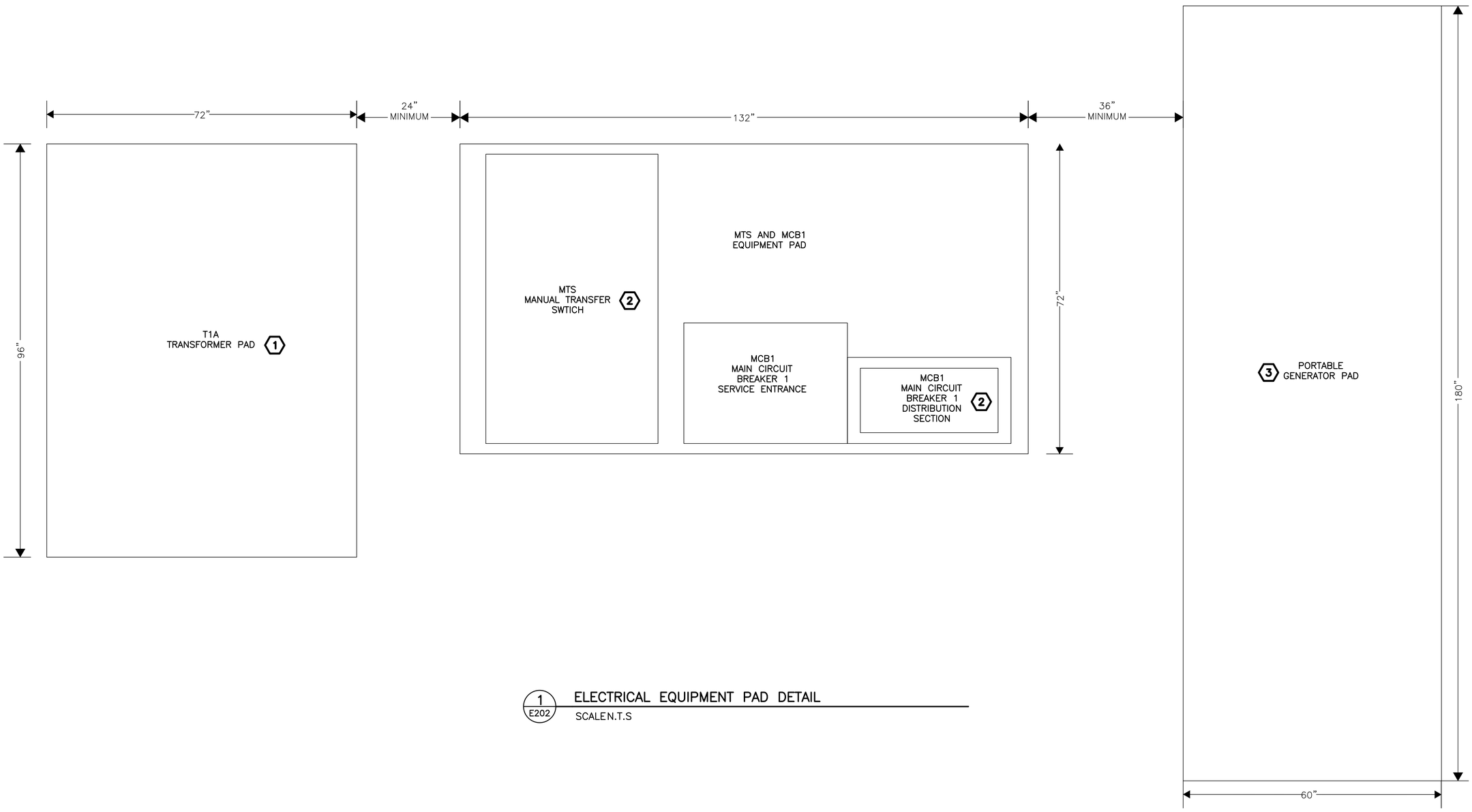

1 / E202 ELECTRICAL EQUIPMENT PAD DETAIL

SCALE N.T.S

A/E FIRM	DESIGNED:	SUB SHEET NO.	TITLE OF SHEET	DRAWING NO.
PRIME: HDR ENGINEERING, INC. DENVER, CO 80202	T. VANG	E202	ELECTRICAL TEMPORARY WWTP EQUIPMENT PAD DETAIL	113
	ADD T. VANG			182752A
	TECH. REVIEW: T. MOORE			PMIS/PKG NO. 318719
	DATE: JUNE 2026		NORTH RIM – GRAND CANYON NATIONAL PARK	SHEET 69 OF 90

REGISTERED PROFESSIONAL ENGINEER (ELECTRICAL) CERTIFICATE NO. 75014 TOU VANG Date Signed 06/11/26 ARIZONA, U.S.A.

6/11/2026 Lynch, Nicole C:\Users\nlynch\DC\ACCDocs\HDR\10414450_NPS_GRCA_N_Rim_Utility_2026\Project Files\CAD_HDR\DRAWINGS\TEMPORARY WASTEWATER\ELECTRICAL\E202.dwg

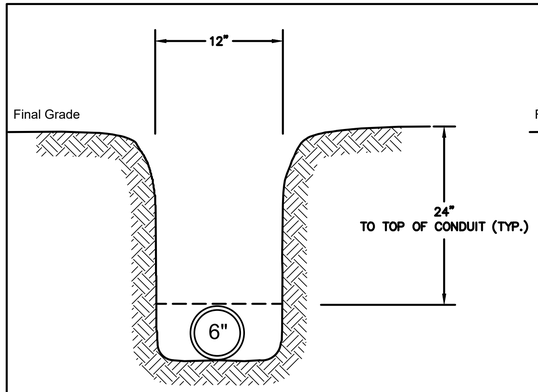

AA E501 (1) 6" SCH 40 PVC
NOT TO SCALE

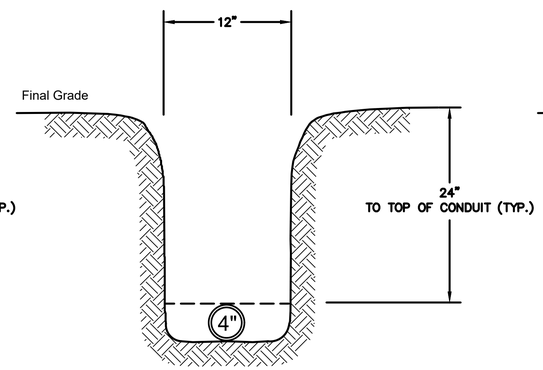

BB E501 (1) 4" SCH 40 PVC
NOT TO SCALE

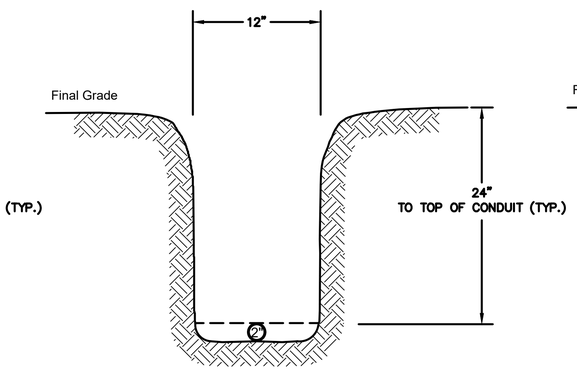

CC E501 (1) 2" SCH 40 PVC
NOT TO SCALE

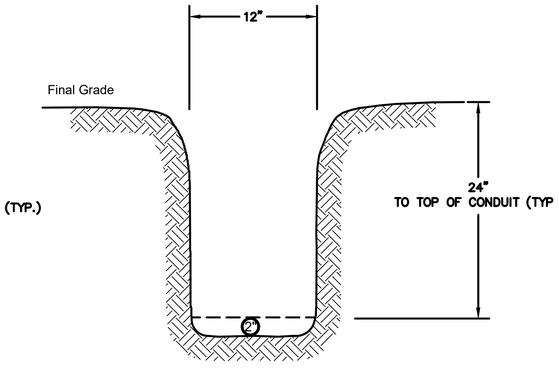

DD E501 (1) 2" MICRODUCT
NOT TO SCALE

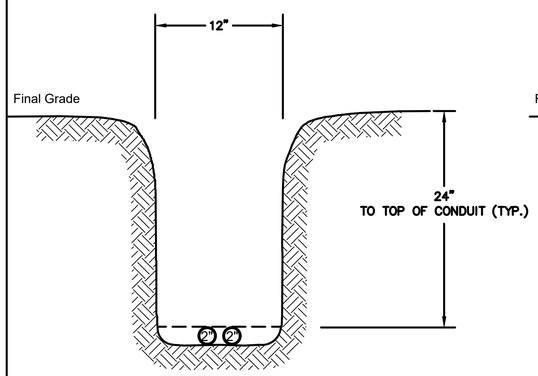

EE E501 (2) 2" MICRODUCT
NOT TO SCALE

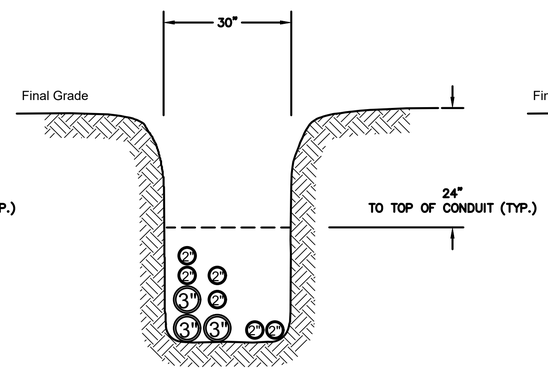

FF E501 (3) 3" SCH 40 PVC, (3) 2" SCH 40 PVC, (2) 2" MICRODUCT
NOT TO SCALE

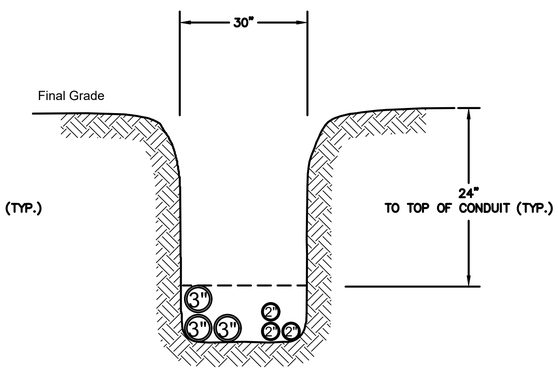

GG E501 (3) 3" SCH 40 PVC, (3) 2" MICRODUCT
NOT TO SCALE

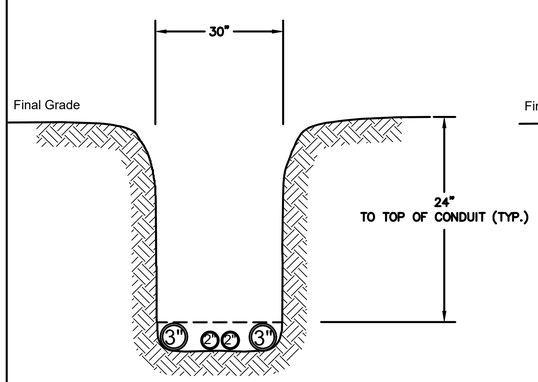

HH E501 (2) 3" SCH 40 PVC, (2) 2" MICRODUCT
NOT TO SCALE

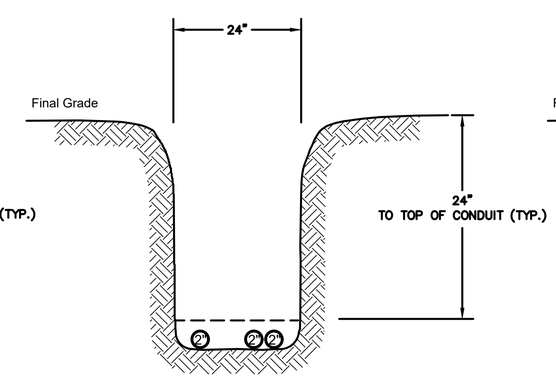

II E501 (1) 2" SCH 40 PVC, (2) 2" MICRODUCT
NOT TO SCALE

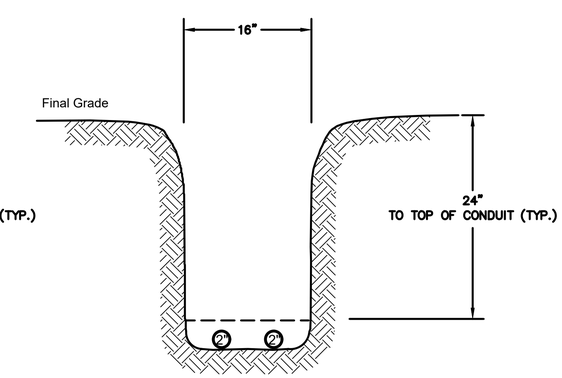

JJ E501 (1) 2" SCH 40 PVC, (1) 2" MICRODUCT
NOT TO SCALE

GENERAL NOTES
1. SEE DETAIL 1 ON SHEET E503 FOR CONDUIT SEPARATION DISTANCES.
2. SEE SHEET E601 AND E602 FOR POWER CONDUIT SCHEDULE.

COMMUNICATIONS MICRODUCT SCHEDULE - NORTH RIM TEMPORARY WASTE WATER TREATMENT PLANT

FROM	TO	MICRODUCT	REMARKS
TWWTP1	CH1	2 - 2"	TREATMENT PLANT 1 TO COMMS HANDHOLE 1
TWWTP2	CH1	2 - 2"	TREATMENT PLANT 2 TO COMMS HANDHOLE 1
CH1	CH2	2 - 2"	COMMS HANDHOLE 1 TO COMMS HANDHOLE 2
CH2	UV	1 - 2"	COMMS HANDHOLE 2 TO UV SKID PANEL
CH2	EQ	1 - 2"	COMMS HANDHOLE 2 TO EQ TANK PANEL
CH2	WW LAB	1 - 2"	COMMS HANDHOLE 2 TO WASTE WATER LAB
CH2	CH3	2 - 2"	COMMS HANDHOLE 2 TO COMMS HANDHOLE 3
CH3	FILTRATE LS	1 - 2"	COMMS HANDHOLE 3 TO FILTRATE LIFT STATION
CH3	INFLUENT LS	1 - 2"	COMMS HANDHOLE 3 TO INFLUENT LIFT STATION
CH3	SCREENING	1 - 2"	COMMS HANDHOLE 3 TO SCREENING SYSTEM
CH3	HYPO CONEX	1 - 2"	COMMS HANDHOLE 3 TO HYPOCHLORITE CONEX
CH3	CITRIC CONEX	1 - 2"	COMMS HANDHOLE 3 TO CITRIC CONEX

REGISTERED PROFESSIONAL ENGINEER (ELECTRICAL) CERTIFICATE NO. 75014 TOU VANG Date Signed 06/11/2026 ARIZONA, U.S.A.

A/E FIRM
PRIME:
HDR ENGINEERING, INC.
DENVER, CO 80202

DESIGNED: T. VANG
CADD: T. VANG
TECH. REVIEW: T. MOORE
DATE: JUNE 2026

SUB SHEET NO. E501

TITLE OF SHEET
ELECTRICAL
TEMPORARY WWTP TRENCHING DETAILS & COMMUNICATION SCHEDULE
NORTH RIM – GRAND CANYON NATIONAL PARK

DRAWING NO. 113
182752A
PMIS/PKG NO. 318719
SHEET 70 OF 90

6/11/2026 Lynch, Nicole C:\Users\nlynch\DC\ACCDocs\HDR\10414450_NPS_GRCA_N_Rim_Utility_2026\Project Files\CAD_HDR\DRAWINGS\TEMPORARY WASTEWATER\ELECTRICAL\E501.dwg

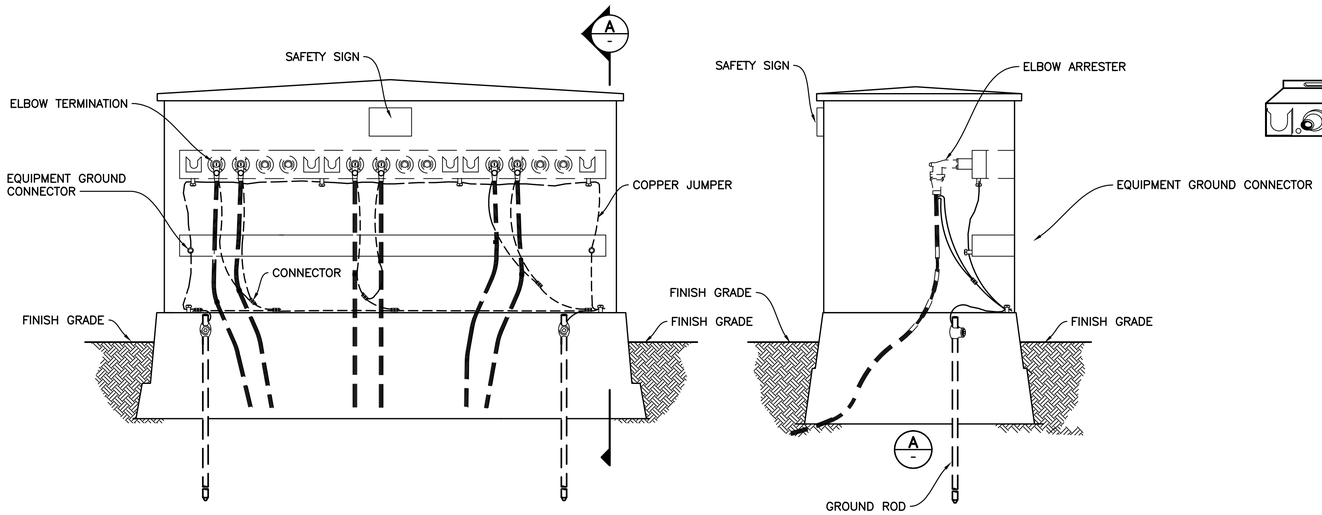

1 E502 TYPICAL THREE–PHASE PADMOUNTED JUNCTION ENCLOSURE

NOT TO SCALE

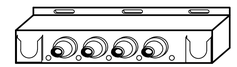

FOUR POINT TERMINATION

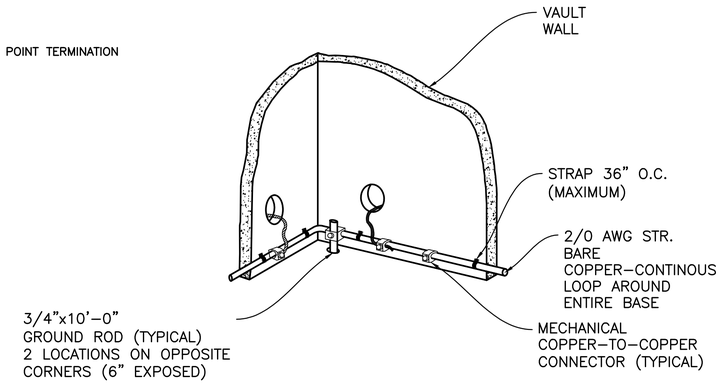

3 E502 TYPICAL EQUIPMENT VAULT GROUNDING DETAIL

NOT TO SCALE

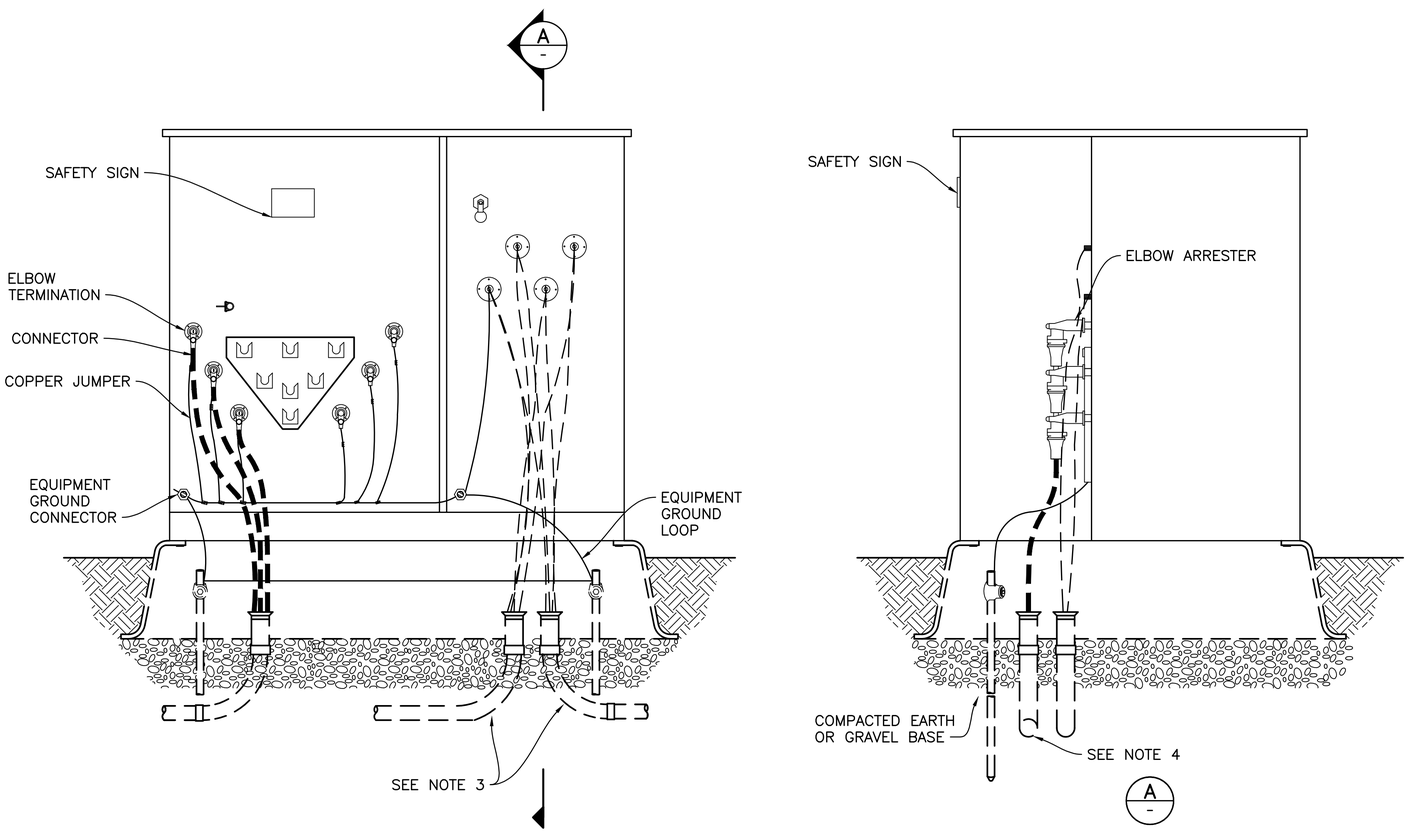

2 E502 THREE–PHASE, LOOP FEED, PADMOUNTED TRANSFORMER

NOT TO SCALE

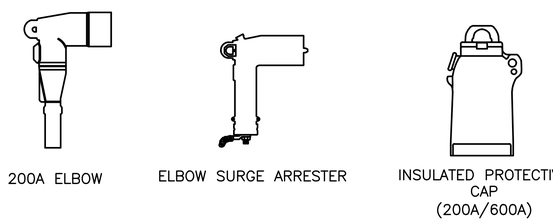

4 E502 ELBOWS AND CONNECTORS

NOT TO SCALE

NOTES:

1. PROVIDE SUFFICIENT PRIMARY NEUTRAL PIGTAIL AND CABLE SLACK TO PERMIT READY DISCONNECTION OF ELBOW AND MOUNTING ON PARKING STAND. TRAIN CABLES AS SHOWN.
2. INSTALL SAFETY SIGNS ON TRANSFORMER INSIDE AND OUTSIDE ENCLOSURE ACCORDINGLY.
3. NON–METALLIC SWEEPS SHOULD BE STABILIZED WITH CONCRETE ENCASEMENTS IF PULLING TENSIONS DICTATE.
4. LARGER RADIUS SWEEPS, WHICH MAY BE REQUIRED BY PULLING TENSIONS, MAY INCREASE BURIAL DEPTHS.

REGISTERED PROFESSIONAL ENGINEER (ELECTRICAL) CERTIFICATE NO. 75014 TOU VANG Date Signed 06/11/2026 ARIZONA, U.S.A.

A/E FIRM	DESIGNED:	SUB SHEET NO.	TITLE OF SHEET	DRAWING NO.
PRIME: HDR ENGINEERING, INC. DENVER, CO 80202	T. VANG CADD T. VANG TECH. REVIEW: T. MOORE DATE: JUNE 2026	E502	ELECTRICAL TEMPORARY WWTP ELECTRICAL DETAILS	113 182752A PMIS/PKG NO. 318719 SHEET 71 OF 90

NORTH RIM – GRAND CANYON NATIONAL PARK

6/11/2026 Lynch, Nicole C:\Users\nlynch\DC\ACCDocs\HDR\10414450_NPS_GRCA_N_Rim_Utility_2026\Project Files\CAD_HDR\DRAWINGS\TEMPORARY WASTEWATER\ELECTRICAL\E502.dwg

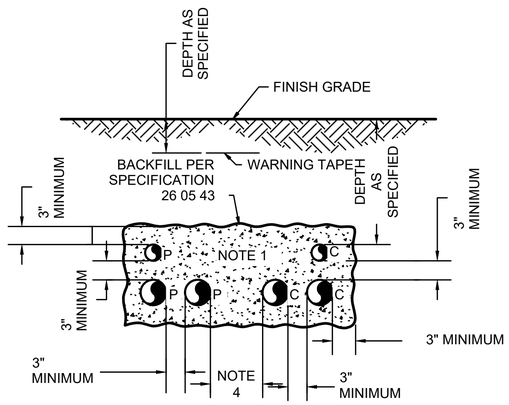

NOTES:

1. NUMBER OF CONDUITS AS REQUIRED FOR THE APPLICATION.

2. P SUBSCRIPT ELECTRICAL POWER OR CONTROL CONDUIT.

3. C SUBSCRIPT COMMUNICATION (TELEPHONE, DATA, INSTRUMENTATION) CONDUIT.

4. 6" MINIMUM WHEN POWER CONDUIT CONTAINS LESS THAN 1000V. 12" MINIMUM WHEN POWER CONDUIT CONTAINS MORE THAN 1000V.

1/E503 DIRECT BURIED CONDUIT(S) SECTION

NOT TO SCALE

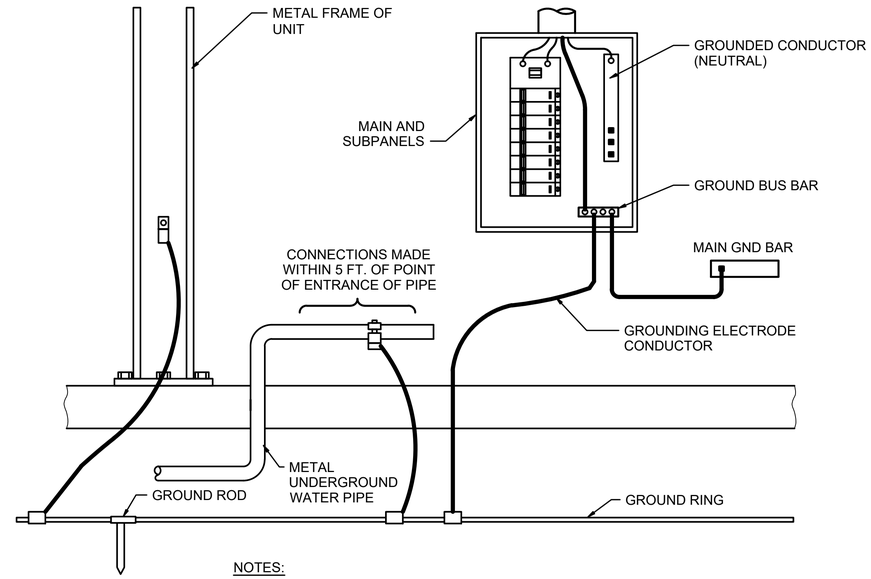

NOTES:

1. AT THE SERVICE ENTRANCE MTS - A NEUTRAL BOND TO GROUND WILL BE REQUIRED. SEE SHEET E601 FOR ADDITIONAL DETAIL.

3/E503 GROUNDING ELECTRODE SYSTEM

NOT TO SCALE

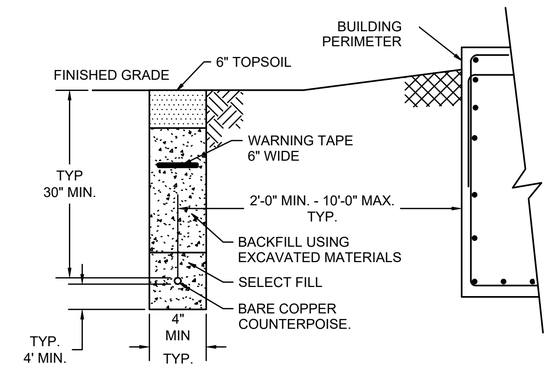

4/E503 TYPICAL GROUND RING INSTALLATION DETAIL

NOT TO SCALE

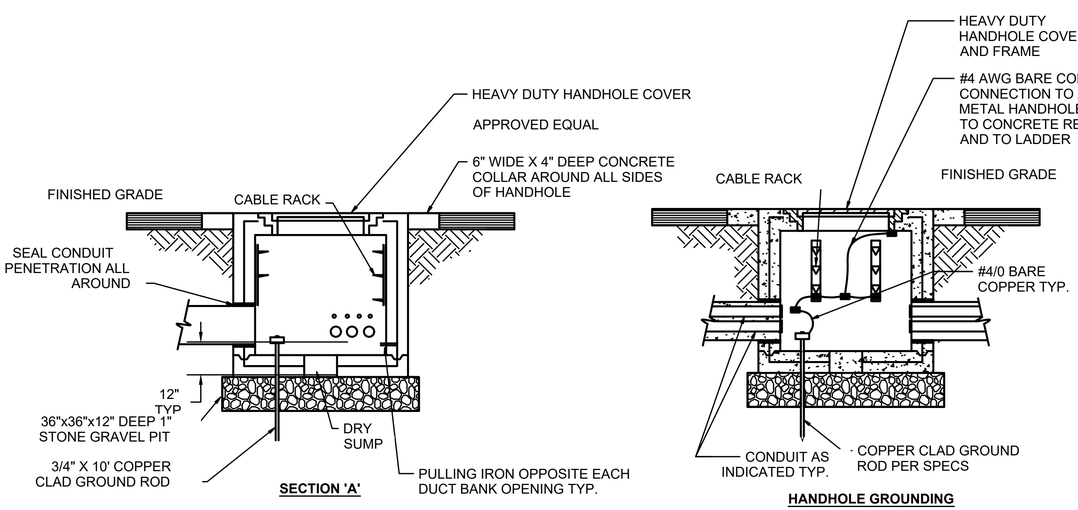

2/E503 ELECTRIC HANDHOLE DETAIL

NOT TO SCALE

NOTES:

1. MINIMUM REQUIREMENTS: CONCRETE BOX WITH #16 STEEL REINFORCEMENT RODS AT 8" CENTER MAX. INTERIOR SIZE: 48" LONG X 48" WIDE WITH 4" THICK WALLS.

2. METAL HANDHOLE COVER SHALL BE GROUNDED AS PER THIS DETAIL.

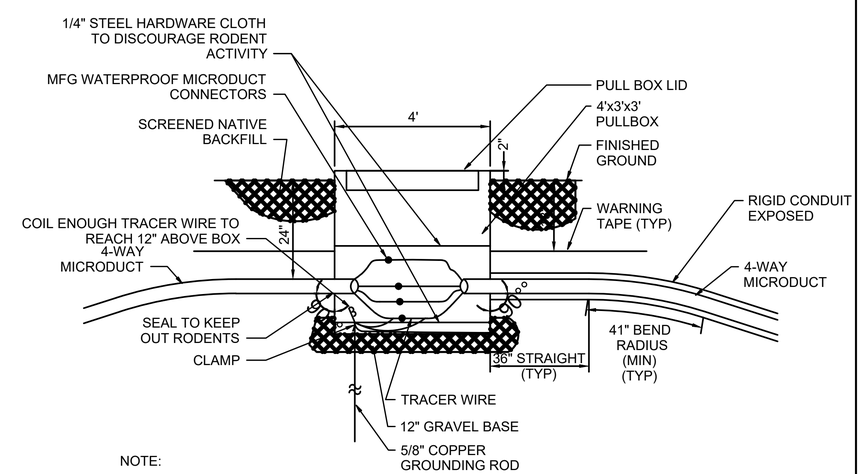

NOTE:

1. SEAL MICRODUCT TO JACKET TO MINIMIZE WATER OR FOREIGN BODY INTRUSION.

2. MATCH INNERDUCT COLOR FOR JUNCTIONS.

5/E503 COMMUNICATION HANDHOLE DETAIL

NOT TO SCALE

REGISTERED PROFESSIONAL ENGINEER (ELECTRICAL) CERTIFICATE NO. 75014 TOU VANG Date Signed 06/11/2026 ARIZONA, U.S.A.

A/E FIRM	DESIGNED:	SUB SHEET NO.	TITLE OF SHEET	DRAWING NO.
PRIME: HDR ENGINEERING, INC. DENVER, CO 80202	T. VANG CADD T. VANG TECH. REVIEW: T. MOORE DATE: JUNE 2026	E503	ELECTRICAL TEMPORARY WWTP ELECTRICAL DETAILS GROUNDING & TRENCH NORTH RIM – GRAND CANYON NATIONAL PARK	113 182752A PMIS/PKG NO. 318719 SHEET 72 OF 90

6/11/2026 Lynch, Nicole C:\Users\nlynch\DC\ACCDocs\HDR\10414450_NPS_GRCA_N_Rim_Utility_2026\Project Files\CAD_HDR\DRAWINGS\TEMPORARY WASTEWATER\ELECTRICAL\E503.dwg

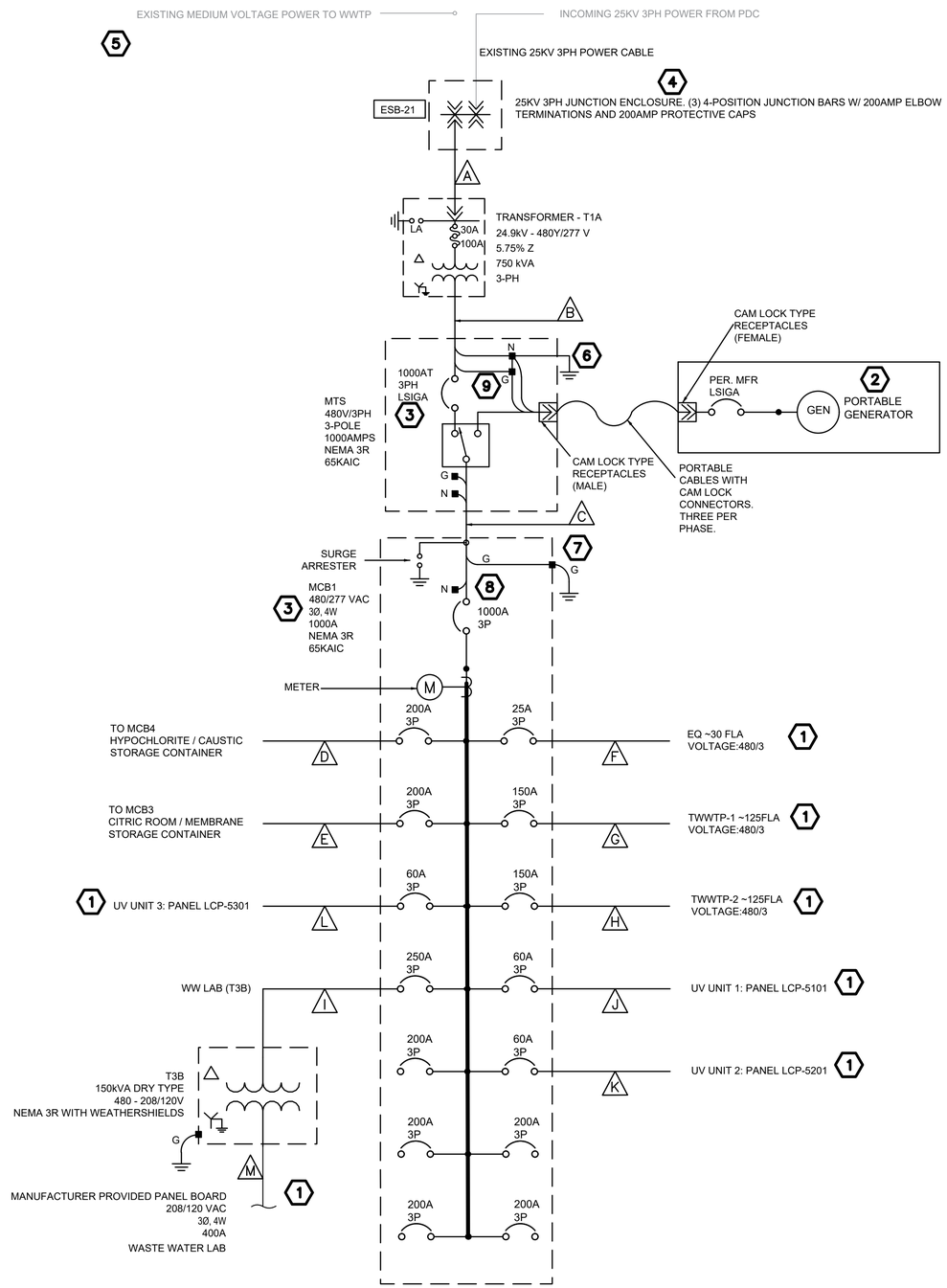

GENERAL NOTES

1. GROUNDING ELECTRODE SYSTEM IS REQUIRED AT EVERY STRUCTURE AND BUILDING FED FROM MCBS. NEUTRAL IS NOT TO BE BONDED AT THE BUILDING GROUND.

KEYNOTES: (X)

1. TERMINATE POWER CABLES AT MANUFACTURER PROVIDED TERMINAL BLOCKS.
2. TEMPORARY PORTABLE GENERATOR CONNECTION WITH CAM LOCK TYPE CONNECTIONS.
3. 100% RATED BREAKER
4. INTERCEPT EXISTING MEDIUM VOLTAGE POWER CABLE BETWEEN POWER DISTRIBUTION CENTER AND WWTP. SET 3PH JUNCTION ENCLOSURE. EXPOSE EXISTING MEDIUM VOLTAGE POWER CABLE AND REROUTE TO JUNCTION ENCLOSURE ESB–21. TERMINATE WITH EXISTING POWER CABLE.
5. ABANDON EXISTING MEDIUM VOLTAGE POWER FROM INTERCEPTION POINT TO WWTP.
6. MAIN BONDING JUMPER
7. ALL GROUNDING JUMPER TO BE #4/0 UNLESS OTHERWISE SHOWN. SEE DETAIL 3 ON SHEET E503 FOR GROUNDING ELECTRODE SYSTEM DETAIL.
8. DO NOT BOND NEUTRAL AND GROUND TOGETHER.
9. MAIN BONDING JUMPER.

CABLE/CONDUIT SCHEDULE

CABLE ID	FROM	TO	CONDUIT	CABLE
A	ESB-21	T1A	6" PVC CONDUIT	(3) 1/C 3/0 AL 133% URD CABLE W/ 1/3 CONC NEUTRAL
B	T1A	ATS	6" PVC CONDUIT	3 SETS [3#500kCMIL, #500kCMIL (N), #2/0 (G)]*
C	ATS	MCB1	6" PVC CONDUIT	3 SETS [3#500kCMIL, #500kCMIL (N), #2/0 (G)]*
D	MCB1	MCB4	3" PVC CONDUIT	1 SET [3#4/0, #4/0 (N), #6 (G)]*
E	MCB1	MCB3	3" PVC CONDUIT	1 SET [3#4/0, #4/0 (N), #6 (G)]*
F	MCB1	EQ	2" PVC CONDUIT	1 SET [3#8, #8 (N), #10 (G)]*
G	MCB1	TWWTP-1	2" PVC CONDUIT	1 SET [3#1/0, #1/0 (N), #6 (G)]*
H	MCB1	TWWTP-2	2" PVC CONDUIT	1 SET [3#1/0, #1/0 (N), #6 (G)]*
I	MCB1	T3B	3" PVC CONDUIT	1 SET [3#250, #4 (G)]*
J	MCB1	UV UNIT 1	2" PVC CONDUIT	1 SET [3#6, #6 (N), #8 (G)]*
K	MCB1	UV UNIT 2	2" PVC CONDUIT	1 SET [3#6, #6 (N), #8 (G)]*
L	MCB1	UV UNIT 3	2" PVC CONDUIT	1 SET [3#6, #6 (N), #8 (G)]*
M	T3B	WW LAB PB	6" PVC CONDUIT	2 SETS [3#350kCMIL, #350kCMIL (N), #2 (G)]*

NOTE: (* COPPER CONDUCTORS WITH XHHW–2 INSULATION)

MCB1 LOAD ANALYSIS:

	CABLE	UNIT	LOAD	AMPS @480V
MCB3				
Subtotal MCB3 Load	E			141.9
MCB4				
Subtotal MCB4 Load	D			137.7
MCB1 Loads (Direct Connection)				
TWWTP1	G	KW	60	72.2
TWWTP2	H	KW	60	72.2
EQ TANK	F	KW	14.4	17.3
WW Lab	I	KVA	150	180.4
UV PANEL 1 (INCLUDES CONTROLS/COOLING PUMP)	J	KVA	39.69	47.7
UV PANEL 2	K	KVA	33.02	39.7
UV PANEL 3 (FUTURE)	L	KVA	33.02	39.7
Subtotal MCB1 Direct Connection Load				469.3
Subtotal MCB1 Connected Load				748.9
25% of largest motor (TWWTP)				1.9
Subtotal - Minumum MCB1 Ampacity per NEC				750.8
25% NPS Spare Capacity				187.7
Total, with +25% Spare capacity				938.5

REGISTERED PROFESSIONAL ENGINEER (ELECTRICAL) CERTIFICATE NO. 75014 TOU VANG Date Signed 06/11/26 ARIZONA, U.S.A.

A/E FIRM	DESIGNED:	SUB SHEET NO.	TITLE OF SHEET	DRAWING NO.
PRIME: HDR ENGINEERING, INC. DENVER, CO 80202	T. VANG CADD T. VANG TECH. REVIEW: T. MOORE DATE: JUNE 2026	E601	ELECTRICAL TEMPORARY WWTP SINGLE LINE DIAGRAM 1	113 182752A PMIS/PKG NO. 318719 SHEET 73 OF 90

NORTH RIM – GRAND CANYON NATIONAL PARK

6/11/2026 Lynch, Nicole C:\Users\nlynch\DC\ACCDocs\HDR\10414450_NPS_GRCA_N_Rim_Utility_2026\Project Files\CAD_HDR\DRAWINGS\TEMPORARY WASTEWATER\ELECTRICAL\E601-E602.dwg

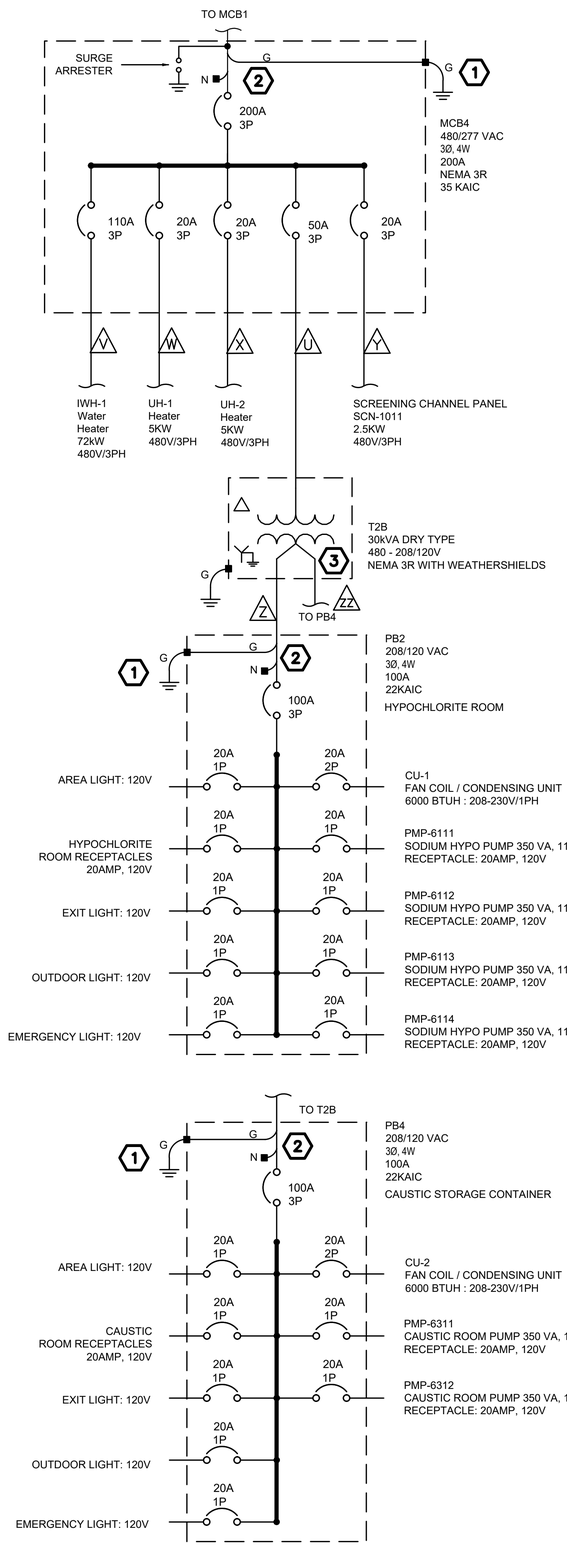

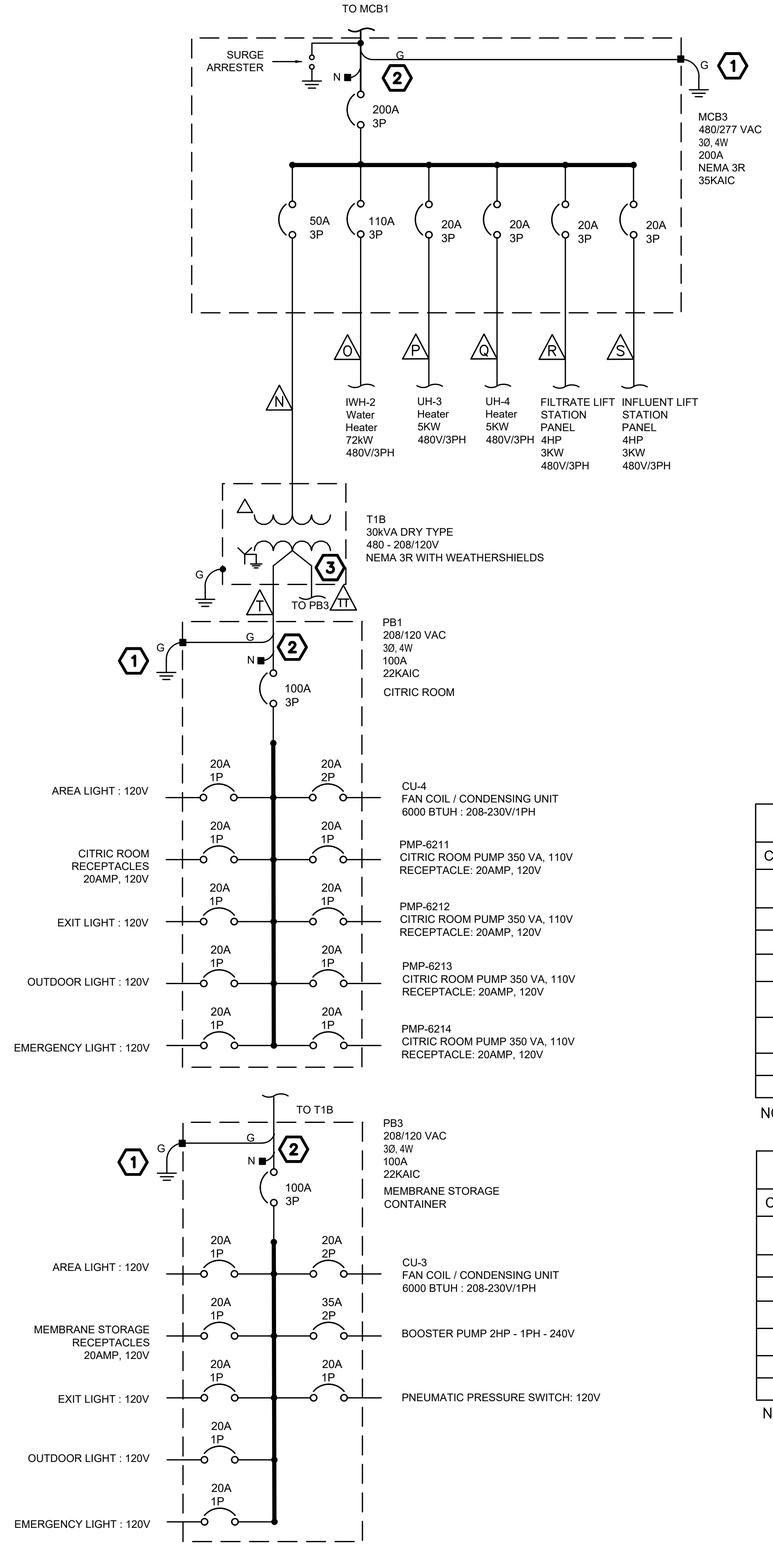

MCB3 LOAD ANALYSIS:

MCB3 Loads (Direct Connection)	CABLE	UNIT	LOAD	AMPS @480V
T1B	N	KVA	30	36.1
IWH-2 Water Heater	O	KW	72	86.6
UH-3 Heater	P	KW	5	6.0
UH-4 Heater	Q	KW	5	6.0
Filtrate Lift Station	R	KW	3	3.6
Influent Lift Station	S	KW	3	3.6
Subtotal MCB3 Direct Connection Load				141.9
Subtotal MCB3 Connected Load				141.9
25% of largest motor (Lift Station)				1.5
Subtotal - MCB3 Ampacity per NEC				143.4
25% NPS Spare Capacity				35.8
Total, with +25% Spare capacity				179.2

MCB4 LOAD ANALYSIS:

MCB4 Loads (Direct Connection)	CABLE	UNIT	LOAD	AMPS @480V
T2B	U	KVA	30	36.1
IWH-1 Water Heater	V	KW	72	86.6
UH-1 Heater	W	KW	5	6.0
UH-2 Heater	X	KW	5	6.0
Screening Channel	Y	KW	2.5	3.0
Subtotal SR-SWBD-1 Direct Connection Load				137.7
Subtotal SR-SWBD-1 Connected Load				137.7
25% of largest motor (Screening Auger)				1.5
Subtotal - Minumum SR-SWBD-1 Ampacity per NEC				139.2
25% NPS Spare Capacity				34.8
Total, with +25% Spare capacity				174.0

GENERAL NOTES

1. GROUNDING ELECTRODE SYSTEM IS REQUIRED AT EVERY STRUCTURE AND BUILDING FED FROM MCBS. NEUTRAL IS NOT TO BE BONDED AT THE BUILDING GROUND.

KEYNOTES: (X)

1. ALL GROUNDING JUMPER TO BE #4/0 UNLESS OTHERWISE SHOWN. SEE DETAIL 3 ON SHEET E503 FOR GROUNDING ELECTRODE SYSTEM DETAIL.
2. DO NOT BOND NEUTRAL AND GROUND TOGETHER.
3. BOND NEUTRAL (X0) TO GROUND AT TRANSFORMER T1B AND T2B. TRANSFORMERS COMPRISE SEPARATELY–DERIVED SYSTEMS.

MCB3 CABLE/CONDUIT SCHEDULE

CABLE ID	FROM	TO	CONDUIT	CABLE
N	MCB3	T1B	2" PVC CONDUIT	1 SET [3#4, #10 (G)]*
O	MCB3	IWH-2	2" PVC CONDUIT	1 SET [3#2, #6 (G)]*
P	MCB3	UH-3	3/4" PVC CONDUIT	1 SET [3#12, #12 (G)]*
Q	MCB3	UH-4	3/4" PVC CONDUIT	1 SET [3#12, #12 (G)]*
R	MCB3	FILTRATE LIFT STATION CONTROL PANEL	2" PVC CONDUIT	1 SET [3#12, #12 (G)]*
S	MCB3	INFLUENT LIFT STATION CONTROL PANEL	2" PVC CONDUIT	1 SET [3#12, #12 (G)]*
T	T1B	PB1	2" PVC CONDUIT	1 SET [3#2, #2(N), #6 (G)]*
TT	T1B	PB3	2" PVC CONDUIT	1 SET [3#2, #2(N), #6 (G)]*

NOTE: (* COPPER CONDUCTORS WITH XHHW–2 INSULATION)

MCB4 CABLE/CONDUIT SCHEDULE

CABLE ID	FROM	TO	CONDUIT	CABLE
U	MCB4	T2B	2" PVC CONDUIT	1 SET [3#4, #10 (G)]*
V	MCB4	IWH-1	2" PVC CONDUIT	1 SET [3#2, #6 (G)]*
W	MCB4	UH-1	3/4" PVC CONDUIT	1 SET [3#12, #12 (G)]*
X	MCB4	UH-2	3/4" PVC CONDUIT	1 SET [3#12, #12 (G)]*
Y	MCB4	SCREEN CHANNEL PANEL	2" PVC CONDUIT	1 SET [3#12, #12 (G)]*
Z	T2B	PB2	2" PVC CONDUIT	1 SET [3#2, #2(N), #6 (G)]*
ZZ	T2B	PB4	2" PVC CONDUIT	1 SET [3#2, #2(N), #6 (G)]*

NOTE: (* COPPER CONDUCTORS WITH XHHW–2 INSULATION)

REGISTERED PROFESSIONAL ENGINEER (ELECTRICAL) CERTIFICATE NO. 75014 TOU VANG Date Signed 06/11/26 ARIZONA, U.S.A.

A/E FIRM	DESIGNED:	SUB SHEET NO.	TITLE OF SHEET	DRAWING NO.
PRIME: HDR ENGINEERING, INC. DENVER, CO 80202	T. VANG	E602	ELECTRICAL TEMPORARY WWTP SINGLE LINE DIAGRAM 2	113 / 182752A
	CADD: T. VANG			PMIS/PKG NO. 318719
	TECH. REVIEW: T. MOORE			SHEET
	DATE: JUNE 2026		NORTH RIM – GRAND CANYON NATIONAL PARK	74 OF 90

6/11/2026 Lynch, Nicole C:\Users\nlynch\DC\ACCDocs\HDR\10414450_NPS_GRCA_N_Rim_Utility_2026\Project Files\CAD_HDR\DRAWINGS\TEMPORARY WASTEWATER\ELECTRICAL\E601-E602.dwg

BRANCH PANEL: PB1

LOCATION: CITRIC ROOM
SUPPLY FROM: XMFR T1B
MOUNTING: SURFACE
ENCLOSURE: NEMA 3R
VOLTS: 208Y/120
PHASES: 3
WIRES: 4
INTEGRAL SPD: No
A.I.C. RATING: 22
MAINS TYPE: MCB
MAINS RATING: 100 A
SERVICE ENTRANCE LABEL: No

WIRE & CONDUIT	CKT	CIRCUIT DESCRIPTION	CLASS	TRIP	P	A		B		C		P	TRIP	CLASS	CIRCUIT DESCRIPTION	CKT	WIRE & CONDUIT
2 #12, #12 G, 3/4"C	1	AREA LIGHT	LTG	20 A	1	120	1000					2	20 A	HVAC	CU-4 : FAN COIL / CONDENSING UNIT	2	2 #12, #12 G, 3/4"C
2 #12, #12 G, 3/4"C	3	CITRIC ROOM RECEPTACLES	REC	20 A	1			540			1000					4	
2 #12, #12 G, 3/4"C	5	EXIT LIGHT	LTG	20 A	1				350	3		1	20 A	EQUIPMENT	CITRIC PUMP - PMP-6211	6	2 #12, #12 G, 3/4"C
2 #12, #12 G, 3/4"C	7	OUTDOOR LIGHT	LTG	20 A	1	10	350					1	20 A	EQUIPMENT	CITRIC PUMP - PMP-6212	8	2 #12, #12 G, 3/4"C
2 #12, #12 G, 3/4"C	9	EMERGENCY LIGHT	LTG	20 A	1			22	350			1	20 A	EQUIPMENT	CITRIC PUMP - PMP-6213	10	2 #12, #12 G, 3/4"C
-	11	SPARE	-	20 A	1						350	1	20 A	EQUIPMENT	CITRIC PUMP - PMP-6214	12	2 #12, #12 G, 3/4"C
-	13	SPARE	-	20 A	1							1	20 A	-	SPARE	14	-
-	15	SPARE	-	20 A	1							1	20 A	-	SPARE	16	-
-	17	SPARE	-	20 A	1							1	20 A	-	SPARE	18	-
-	19	SPARE	-	20 A	1							1	20 A	-	SPARE	20	-
-	21	SPARE	-	20 A	1							1	20 A	-	SPARE	22	-
				TOTAL LOAD:		1480 VA		1262 VA		1353 VA							
				TOTAL AMPS:		12 A		11 A		11 A							

LOAD CLASSIFICATION	CONNECTED LOAD	DEMAND FACTOR	ESTIMATED DEMAND	PANEL TOTALS	
HVAC	2000 VA	100.00%	2000 VA		
REC	540 VA	100.00%	540 VA	**TOTAL CONNECTED LOAD:**	**4095 VA**
IC	0 VA	100.00%	0 VA	**TOTAL ESTIMATED DEMAND:**	**4095 VA**
PROC	0 VA	100.00%	0 VA	**TOTAL CONNECTED:**	**11 A**
EQUIPMENT	1400 VA	100.00%	1400 VA	**TOTAL ESTIMATED DEMAND**	**11 A**
LTG	155 VA	100.00%	155 VA	**SPARE AMPERAGE:**	**25.00%**
				TOTAL ESTIMATED DEMAND + SPARE:	**14 A**

NOTES:

BRANCH PANEL: PB3

LOCATION: MEMBRANE STORAGE CONTAINER
SUPPLY FROM: XMFR T1B
MOUNTING: SURFACE
ENCLOSURE: NEMA 3R
VOLTS: 208Y/120
PHASES: 3
WIRES: 4
INTEGRAL SPD: No
A.I.C. RATING: 22
MAINS TYPE: MCB
MAINS RATING: 100 A
SERVICE ENTRANCE LABEL: No

WIRE & CONDUIT	CKT	CIRCUIT DESCRIPTION	CLASS	TRIP	P	A		B		C		P	TRIP	CLASS	CIRCUIT DESCRIPTION	CKT	WIRE & CONDUIT
2 #12, #12 G, 3/4"C	1	AREA LIGHT	LTG	20 A	1	120	1000					2	20 A	HVAC	CU-3 : FAN COIL / CONDENSING UNIT	2	2 #12, #12 G, 3/4"C
2 #12, #12 G, 3/4"C	3	MEMBRANE RECEPTACLES	REC	20 A	1			540	1000							4	
2 #12, #12 G, 3/4"C	5	EXIT LIGHT	LTG	20 A	1					3	1380	2	35 A	EQUIPMENT	BOOSTER PUMP 2HP - 200-240V	6	2 #8, #8 G, 3/4"C
2 #12, #12 G, 3/4"C	7	OUTDOOR LIGHT	LTG	20 A	1	10	1380									8	
2 #12, #12 G, 3/4"C	9	EMERGENCY LIGHT	LTG	20 A	1			22	1			1	20 A	EQUIPMENT	PNEUMATIC PRESSURE SWTICH	10	2 #12, #12 G, 3/4"C
-	11	SPARE	-	20 A	1							1	20 A	-	SPARE	12	-
-	13	SPARE	-	20 A	1							1	20 A	-	SPARE	14	-
-	15	SPARE	-	20 A	1							1	20 A	-	SPARE	16	-
-	17	SPARE	-	20 A	1							1	20 A	-	SPARE	18	-
-	19	SPARE	-	20 A	1							1	20 A	-	SPARE	20	-
-	21	SPARE	-	20 A	1							1	20 A	-	SPARE	22	-
				TOTAL LOAD:		2510 VA		1563 VA		1383 VA							
				TOTAL AMPS:		21 A		13 A		12 A							

LOAD CLASSIFICATION	CONNECTED LOAD	DEMAND FACTOR	ESTIMATED DEMAND	PANEL TOTALS	
HVAC	2000 VA	100.00%	2000 VA		
REC	540 VA	100.00%	540 VA	**TOTAL CONNECTED LOAD:**	**5456 VA**
IC	0 VA	100.00%	0 VA	**TOTAL ESTIMATED DEMAND:**	**5456 VA**
PROC	0 VA	100.00%	0 VA	**TOTAL CONNECTED:**	**15 A**
EQUIPMENT	2761 VA	100.00%	2761 VA	**TOTAL ESTIMATED DEMAND**	**15 A**
LTG	155 VA	100.00%	155 VA	**SPARE AMPERAGE:**	**25.00%**
				TOTAL ESTIMATED DEMAND + SPARE:	**19 A**

NOTES:

BRANCH PANEL: PB2

LOCATION: HYPOCHLORITE ROOM
SUPPLY FROM: XMFR T2B
MOUNTING: SURFACE
ENCLOSURE: NEMA 3R
VOLTS: 208Y/120
PHASES: 3
WIRES: 4
INTEGRAL SPD: No
A.I.C. RATING: 22
MAINS TYPE: MCB
MAINS RATING: 100 A
SERVICE ENTRANCE LABEL: No

WIRE & CONDUIT	CKT	CIRCUIT DESCRIPTION	CLASS	TRIP	P	A		B		C		P	TRIP	CLASS	CIRCUIT DESCRIPTION	CKT	WIRE & CONDUIT
2 #12, #12 G, 3/4"C	1	AREA LIGHT	LTG	20 A	1	120	1000					2	20 A	HVAC	CU-1 : FAN COIL / CONDENSING UNIT	2	2 #12, #12 G, 3/4"C
2 #12, #12 G, 3/4"C	3	HYPO ROOM RECEPTACLES	REC	20 A	1			540			1000					4	
2 #12, #12 G, 3/4"C	5	EXIT LIGHT	LTG	20 A	1				350	3		1	20 A	EQUIPMENT	SODIUM HYPO PUMP - PMP-6111	6	2 #12, #12 G, 3/4"C
2 #12, #12 G, 3/4"C	7	OUTDOOR LIGHT	LTG	20 A	1	10	350					1	20 A	EQUIPMENT	SODIUM HYPO PUMP - PMP-6112	8	2 #12, #12 G, 3/4"C
2 #12, #12 G, 3/4"C	9	EMERGENCY LIGHT	LTG	20 A	1			22	350			1	20 A	EQUIPMENT	SODIUM HYPO PUMP - PMP-6113	10	2 #12, #12 G, 3/4"C
-	11	SPARE	-	20 A	1						350	1	20 A	EQUIPMENT	SODIUM HYPO PUMP - PMP-6114	12	2 #12, #12 G, 3/4"C
-	13	SPARE	-	20 A	1							1	20 A	-	SPARE	14	-
-	15	SPARE	-	20 A	1							1	20 A	-	SPARE	16	-
-	17	SPARE	-	20 A	1							1	20 A	-	SPARE	18	-
-	19	SPARE	-	20 A	1							1	20 A	-	SPARE	20	-
-	21	SPARE	-	20 A	1							1	20 A	-	SPARE	22	-
				TOTAL LOAD:		1480 VA		1262 VA		1353 VA							
				TOTAL AMPS:		12 A		11 A		11 A							

LOAD CLASSIFICATION	CONNECTED LOAD	DEMAND FACTOR	ESTIMATED DEMAND	PANEL TOTALS	
HVAC	2000 VA	100.00%	2000 VA		
REC	540 VA	100.00%	540 VA	**TOTAL CONNECTED LOAD:**	**4095 VA**
IC	0 VA	100.00%	0 VA	**TOTAL ESTIMATED DEMAND:**	**4095 VA**
PROC	0 VA	100.00%	0 VA	**TOTAL CONNECTED:**	**11 A**
EQUIPMENT	1400 VA	100.00%	1400 VA	**TOTAL ESTIMATED DEMAND**	**11 A**
LTG	155 VA	100.00%	155 VA	**SPARE AMPERAGE:**	**25.00%**
				TOTAL ESTIMATED DEMAND + SPARE:	**14 A**

NOTES:

BRANCH PANEL: PB4

LOCATION: CAUSTIC ROOM
SUPPLY FROM: XMFR T2B
MOUNTING: SURFACE
ENCLOSURE: NEMA 3R
VOLTS: 208Y/120
PHASES: 3
WIRES: 4
INTEGRAL SPD: No
A.I.C. RATING: 22
MAINS TYPE: MCB
MAINS RATING: 100 A
SERVICE ENTRANCE LABEL: No

WIRE & CONDUIT	CKT	CIRCUIT DESCRIPTION	CLASS	TRIP	P	A		B		C		P	TRIP	CLASS	CIRCUIT DESCRIPTION	CKT	WIRE & CONDUIT
2 #12, #12 G, 3/4"C	1	AREA LIGHT	LTG	20 A	1	120	1000					2	20 A	HVAC	CU-4 : FAN COIL / CONDENSING UNIT	2	2 #12, #12 G, 3/4"C
2 #12, #12 G, 3/4"C	3	CAUSTIC ROOM RECEPTACLES	REC	20 A	1			540			1000					4	
2 #12, #12 G, 3/4"C	5	EXIT LIGHT	LTG	20 A	1				350	3		1	20 A	EQUIPMENT	CAUSTIC PUMP - PMP-6311	6	2 #12, #12 G, 3/4"C
2 #12, #12 G, 3/4"C	7	OUTDOOR LIGHT	LTG	20 A	1	10					350	1	20 A	EQUIPMENT	CAUSTIC PUMP - PMP-6312	8	2 #12, #12 G, 3/4"C
2 #12, #12 G, 3/4"C	9	EMERGENCY LIGHT	LTG	20 A	1			22				1	20 A	-	SPARE	10	-
-	11	SPARE	-	20 A	1							1	20 A	-	SPARE	12	-
-	13	SPARE	-	20 A	1							1	20 A	-	SPARE	14	-
-	15	SPARE	-	20 A	1							1	20 A	-	SPARE	16	-
-	17	SPARE	-	20 A	1							1	20 A	-	SPARE	18	-
-	19	SPARE	-	20 A	1							1	20 A	-	SPARE	20	-
-	21	SPARE	-	20 A	1							1	20 A	-	SPARE	22	-
				TOTAL LOAD:		1130 VA		912 VA		1353 VA							
				TOTAL AMPS:		9 A		8 A		11 A							

LOAD CLASSIFICATION	CONNECTED LOAD	DEMAND FACTOR	ESTIMATED DEMAND	PANEL TOTALS	
HVAC	2000 VA	100.00%	2000 VA		
REC	540 VA	100.00%	540 VA	**TOTAL CONNECTED LOAD:**	**3395 VA**
IC	0 VA	100.00%	0 VA	**TOTAL ESTIMATED DEMAND:**	**3395 VA**
PROC	0 VA	100.00%	0 VA	**TOTAL CONNECTED:**	**9 A**
EQUIPMENT	700 VA	100.00%	700 VA	**TOTAL ESTIMATED DEMAND**	**9 A**
LTG	155 VA	100.00%	155 VA	**SPARE AMPERAGE:**	**25.00%**
				TOTAL ESTIMATED DEMAND + SPARE:	**11 A**

NOTES:

REGISTERED PROFESSIONAL ENGINEER (ELECTRICAL) CERTIFICATE NO. 75014 TOU VANG Date Signed 06/11/26 ARIZONA, U.S.A.

A/E FIRM	DESIGNED:	SUB SHEET NO.	TITLE OF SHEET	DRAWING NO.
PRIME: HDR ENGINEERING, INC. DENVER, CO 80202	T. VANG CADD T. VANG TECH. REVIEW: T. MOORE DATE: JUNE 2026	E604	**ELECTRICAL** TEMPORARY WWTP ELECTRICAL PANELBOARD SCHEDULES NORTH RIM – GRAND CANYON NATIONAL PARK	113 182752A PMIS/PKG NO. 318719 SHEET 75 OF 90

6/11/2026 Lynch, Nicole C:\Users\nlynch\DC\ACCDocs\HDR\10414450_NPS_GRCA_N_Rim_Utility_2026\Project Files\CAD_HDR\DRAWINGS\TEMPORARY WASTEWATER\ELECTRICAL\E604.dwg

LUMINAIRE SCHEDULE

TAG	MANUFACTURER/ MODEL NUMBER	LAMPS							MOUNTING	HEIGHT	DESCRIPTION	IMAGE	NOTES
		TYPE	TEMP	LUMENS	CRI	BUG	VOLTAGE	VA					
EM1	LITHONIA "INDURA" #EXTL-SP2200L-UVOLT-LTP-SDRT-EHO-SW-CW OR APPROVED EQUAL	LED	-	2200	-	N/A	120/277	22	WALL (TO BOTTOM OF FIXTURE)	9'-0" AFF (OR AS NOTED PER DRAWINGS)	INDUSTRIAL EMERGENCY LUMINAIRE UNIT WITH 5VA FLAME RATED/IMPACT-RESISTANT/SCRATCH-RESISTANT/CORROSION PROOF/ UV STABLE RESIN GRAY THERMOPLASTIC COMPACT NEMA 4X HOUSING, TOOL-LESS ACCESS FRONT COVER, UNIQUE TRACK AND SWIVEL FULLY ADJUSTABLE DUAL LED LAMP HEADS, INTEGRAL EXTRA HIGH-OUTPUT SEALED MAINTENANCE-FREE LITHIUM IRON PHOSPHATE EMERGENCY BATTERY PACK, INTEGRAL DISCONNECT, INTEGRAL SURGE PROTECTION, INTEGRAL SELF-DIAGNOSTIC TESTING, INTEGRAL MULTI-COLOR LED STATUS INDICATOR, INTEGRAL CEILING/WALL MOUNT, COLD WEATHER/ WET/ NEMA 4X LOCATION RATED.		1
EX1	LITHONIA #WLTE-W-(NOTE 1)-R-EL-TP-SD OR APPROVED EQUAL	LED	-	-	-	N/A	120/277	3	SURFACE, WALL, END, OR PENDANT (TO BOTTOM OF FIXTURE)	1'-0" ABOVE EGRESS DOOR FRAME/ CEILING (OR AS NOTED PER DRAWINGS)	INDUSTRIAL EXIT SIGN WITH IMPACT-RESISTANT SCRATCH-RESISTANT CORROSION-PROOF THERMOPLASTIC WHITE COMPACT HOUSING, RUGGED HEAVY-DUTY POLYCARBONATE CLEAR HOUSING LENS, TAMPER-RESISTANT SCREW HARDWARE, 6" HIGH WITH 3/4" STROKE RED LETTERS, UNIVERSAL REMOVABLE DIRECTIONAL CHEVRONS INDICATORS, INTEGRAL SEALED MAINTENANCE FREE NICKEL-CADMIUM EMERGENCY BATTERY PACK, INTEGRAL DISCONNECT, INTEGRAL SURGE PROTECTION, INTEGRAL SELF-DIAGNOSTIC TESTING, INTEGRAL UNIVERSAL (TOP, END, OR BACK) CANOPY MOUNT, WET LOCATION RATED.		2,3
M1/M1E	HOLOPHANE #EMX-L24-6000LM-FGFL-WD-MVOLT-GZ10-40K-80CRI-SPD20KV-RMBK-DGXD-CR WALL ANGLE MOUNT: #EMXRMBA MONOPOINT PENDANT MOUNT: PMP4X PROVIDE nLIGHT POWER PACK 'PP' (SEE LUMINAIRE CONTROLS SCHEDULE) OR APPROVED EQUAL	LED	4000K	4697	80	N/A	MVOLT	40	SURFACE, WALL, OR PENDANT (TO BOTTOM OF FIXTURE)	1'-0" ABOVE EGRESS DOOR FRAME/ CEILING (OR AS NOTED PER DRAWINGS)	2' LOW-PROFILE LENSED INDUSTRIAL STRIP LUMINAIRE WITH COMPACT-DESIGN CAST & EXTRUDED ALUMINUM HOUSING & COVER, 18-8 STAINLESS STEEL HARDWARE, INTEGRAL MOLDED SILICON GASKET, 3/4" THREADED NPT END-CAPS, ENHANCED CORROSION RESISTANT DURABLE GREY POWDER COAT FINISH, 0.125" THICK FLAT FROSTED GLASS LENS, WIDE DISTRIBUTION OPTICS, INTEGRAL DRIVER DISCONNECT, INTEGRAL SURGE PROTECTION, INTEGRAL 0-10V DIMMING CONTROLS, INTEGRAL nLIGHT CONTROL MODULE, HIGH OUTPUT LONG-LIFE LEDs, HIGH-EFFICIENCY DRIVER, INTEGRAL RIGID MOUNTING BRACKET, WALL ANGLED (22.5°,45°,90°) RIGID MOUNTING BRACKET OPTION, MONOPOINT PENDANT MOUNTING BRACKET OPTION, IP67/ WET/ NEMA 4X LOCATION RATED.		
W1/W1E	LITHONIA "D-SERIES" #DSXW1-LED-P1-AMBLW-AMCRI-T2S-MVOLT-SRW-PIR1FC3V-VG-DDBXD 'W1E' - PROVIDE WITH INTEGRAL EMERGENCY BATTERY BACK-UP: #E20WC OR APPROVED EQUAL	LED	TRUE AMBER PHOSPHOR (595nm)	613	-	B0-U0-G0	MVOLT	10	WALL (TO BOTTOM OF FIXTURE)	A.F.F. (AS NOTED PER DRAWINGS)	SMALL EXTERIOR WALL PACK LUMINAIRE WITH TWO-PIECE DIE-CAST ALUMINUM HOUSING, INTEGRAL HEAT SINK FINS, ONE-PIECE SOLID SILICONE GASKET, DARK BRONZE ZINC-INFUSED TGIC THERMOSET POWDER COAT FINISH, FULL "CUT-OFF" (NIGHTTIME FRIENDLY) VISUAL COMFORT TYPE II SHORT DISTRIBUTION OPTICS, INTEGRAL PRECISION-MOLDED ACRYLIC LENSES, INTEGRAL DRIVER DISCONNECT, INTEGRAL SURGE PROTECTION, HIGH OUTPUT LONG-LIFE LEDs, HIGH EFFICIENCY DRIVER, INTEGRAL LENS VANDAL GUARD, INTEGRAL MOTION/AMBIENT SENSOR ENABLED AT 1 FC, WET LOCATION RATED.		

NOTES:

1) COORDINATE FINAL AIMING ANGLE WITH CONTRACTING OFFICER.

2) REFER TO DRAWINGS FOR EXACT ROW LENGTH. PROVIDE INTERNAL JOINERS TO ACHIEVE ROW LENGTH AS SHOWN. OPTIMIZE MANUFACTURER'S CONFIGURATION OPTIONS FOR FEWEST SEGMENTS AND MOUNTING DROP LOCATIONS.

3) FOR T-BAR CEILING MOUNTING, PROVIDE WITH #F1A/48A-MCS. FOR HARD CEILING MOUNTING, PROVIDE WITH #F2/48A-MCSJ. REFER TO ARCHITECTURAL REFLECTED CEILING PLAN FOR EXACT CEILING TYPE.

LUMINAIRE CONTROLS SEQUENCE SCHEDULE

SPACE/ AREA TYPE	SEQUENCE OF OPERATIONS (NO DAYLIGHT HARVESTING)	LIGHTING RELAY PANEL	DAYLIGHT HARVESTING - ILLUMINANCE REQUIREMENTS (FC SETPOINTS)
STORAGE CONTAINER	MANUAL ON/ MANUAL OFF BY LOCAL SINGLE GANG SWITCH.	N/A	N/A

REGISTERED PROFESSIONAL ENGINEER (ELECTRICAL) CERTIFICATE NO. 75014 TOU VANG Date Signed 06/11/2026 ARIZONA, U.S.A.

A/E FIRM	DESIGNED:	SUB SHEET NO.	TITLE OF SHEET	DRAWING NO.
PRIME: HDR ENGINEERING, INC. DENVER, CO 80202	T. VANG CADD S. BILD TECH. REVIEW: T. MOORE DATE: JUNE 2026	E605	ELECTRICAL TEMPORARY WWTP STORAGE CONTAINER LUMINAIRE SCHEDULES NORTH RIM – GRAND CANYON NATIONAL PARK	113 182752A PMIS/PKG NO. 318719 SHEET 76 OF 90

6/11/2026 Lynch, Nicole C:\Users\nlynch\DC\ACCDocs\HDR\10414450_NPS_GRCA_N_Rim_Utility_2026\Project Files\CAD_HDR\DRAWINGS\TEMPORARY WASTEWATER\ELECTRICAL\E605.dwg

LINE TYPES

- MAIN PROCESS LINE
- SECONDARY PROCESS LINE
- PROCESS AIR
- AUXILIARY PROCESS LINE
- CHANNEL
- DIRECTION OF FLOW
- ANALOG SIGNAL
- ANALOG AND HARD SIGNAL
- FIELDBUS SIGNAL
- PNEUMATIC SIGNAL
- ELECTRICAL SIGNAL
- HYDRAULIC SIGNAL
- SOFTWARE OR ETHERNET
- SIGNAL CONNECTION
- CROSSOVER - NO CONNECTION
- CAPILLARY
- DOUBLE CONTAINMENT PIPING
- INTERIM PROCESS LINES

VALVE SYMBOLOGY

- BALL VALVE
- BUTTERFLY VALVE
- CHECK VALVE
- CONE VALVE
- DOUBLE CHECK VALVE
- DOUBLE-DISK CHECK VALVE
- BALL CHECK VALVE
- DIAPHRAGM VALVE
- GATE VALVE
- GLOBE VALVE
- KNIFE GATE VALVE
- MUD VALVE
- NEEDLE VALVE
- PINCH VALVE
- ENERGY DISSIPATION VALVE
- PLUG VALVE
- FOOT VALVE
- EMERGENCY STATION EYE WASH
- COMBINED BACK-PRESSURE WITH ANTI SIPHON
- PRESSURE-REDUCING VALVE
- PRESSURE-REGULATING VALVE
- THREE-WAY CONTROL VALVE
- OR — PRESSURE-RELIEF (PRESSURE-SAFETY) VALVE (PSV)
- X — AIR-RELEASE VACUUM VALVE
  A = AIR RELEASE
  VAC = VACUUM RELEASE
  CAV = COMBINED AIR AND VACUUM RELEASE
- S — SOLENOID VALVE

CROSS REFERENCE SYMBOLOGY

- B | 01Y105 — CONTINUATION ON SHEET 01Y105
- 01Y103 | B — CONTINUATION ON SHEET 01Y103

INSTRUMENT SYMBOLOGY

- XXX — LOCALLY MOUNTED FIELD INSTRUMENTATION (SUBSCRIPT INDICATES INSTRUMENTATION ABBREVIATION)
- MOUNTED ON PANEL FRONT
- MOUNTED INSIDE PANEL
- XXX — FRONT PANEL MOUNTED ON AUXILIARY PANEL (SUBSCRIPT INDICATES PANEL)
- MOUNTED INSIDE AUXILIARY PANEL
- PILOT LIGHT
- INSTRUMENT FUNCTIONS SHARING COMMON HOUSING
- I — COMPLEX INTERLOCK AS DEFINED IN CONTROL DIAGRAM OR IN SPECIFICATIONS
- SHARED DISPLAY, SHARED CONTROL, FIELD MOUNTED
- SHARED DISPLAY, SHARED CONTROL, PRIMARY LOCATION - NORMALLY ACCESSIBLE TO OPERATOR
- PROGRAMMABLE LOGIC CONTROL, PRIMARY LOCATION - NORMALLY ACCESSIBLE TO OPERATOR
- PROGRAMMABLE LOGIC CONTROL, FIELD MOUNTED
- DISCRETE INPUT
- DISCRETE OUTPUT
- ANALOG INPUT
- ANALOG OUTPUT
- I/I — SIGNAL ISOLATOR
- ISR — INTRINSICALLY SAFE RELAY
- ISB — INTRINSICALLY SAFE BARRIER

ACTUATOR SYMBOLOGY

- X — OPERATOR ABBREVIATIONS:
  M = MOTOR
  P = PNEUMATIC
  S = SOLENOID
- FLOAT OPERATOR
- SPRING-OPPOSED SINGLE-ACTING PNEUMATIC CYLINDER
- DOUBLE-ACTING PNEUMATIC CYLINDER
- PNEUMATIC DIAPHRAGM
- PNEUMATIC DIAPHRAGM WITH POSITIONER

TYPES OF POWER SUPPLY

A	PLANT COMPRESSED AIR
IA	INSTRUMENTATION AIR
ES	ELECTRIC SUPPLY
NG	NATURAL GAS
HYD	HYDRAULIC

INSTRUMENT IDENTIFICATION LETTERS

	FIRST LETTER		SUCCEEDING LETTERS		
	MEASURED OR INITIATING VARIABLE	MODIFIER	READOUT OR PASSIVE FUNCTION	OUTPUT FUNCTION	MODIFIER
A	ANALYSIS		ALARM		AUTO
B	BURNER, COMBUSTION		USER'S CHOICE	USER'S CHOICE	USER'S CHOICE
C	USERS CHOICE			CONTROL	CLOSED
D	USERS CHOICE	DIFFERENTIAL			
E	VOLTAGE		SENSOR (PRIMARY ELEMENT)		
F	FLOW RATE	RATIO (FRACTION)			FORWARD
G	USER'S CHOICE		GLASS, VIEWING DEVICE		
H	HAND				HIGH
I	CURRENT (ELECTRICAL)		INDICATE		
J	POWER	SCAN			
K	TIME, TIME SCHEDULE	TIME; RATE OF CHANGE		CONTROL STATION	
L	LEVEL		LIGHT		LOW
M	MOISTURE	MOMENTARY			MIDDLE, INTERMEDIATE
N	STATUS		USER'S CHOICE	USER'S CHOICE	USER'S CHOICE
O	USER'S CHOICE		ORIFICE, RESTRICTION		OPEN
P	PRESSURE, VACUUM		POINT (TEST) CONNECTION		
Q	QUANTITY	INTEGRATE, TOTALIZE	PULSE		
R	RADIATION		RECORD	RESET	REMOTE, REVERSE
S	SPEED, FREQUENCY	SAFETY		SWITCH	STOP
T	TEMPERATURE			TRANSMIT	
U	MULTIVARIABLE		MULTIFUNCTION	MULTIFUNCTION	MULTIFUNCTION
V	VIBRATION, MECH. ANALYSIS			VALVE, DAMPER, LOUVER	
W	WEIGHT, FORCE		WELL		
X	COMMAND	X AXIS	UNCLASSIFIED	UNCLASSIFIED	UNCLASSIFIED
Y	EVENT, STATE OR PRESENCE	Y AXIS		RELAY, COMPUTE, CONVERT	
Z	POSITION, DIMENSION	Z AXIS		DRIVER, ACTUATOR, UNCLASSIFIED FINAL CONTROL ELEMENT	

MISCELLANEOUS INSTRUMENTATION ABBREVIATIONS

AI	ANALOG INPUT
AO	ANALOG OUTPUT
CL2	CHLORINE (ANALYZER MODIFIER)
CO	CARBON MONOXIDE (ANALYZER MODIFIER)
CO2	CARBON DIOXIDE (ANALYZER MODIFIER)
COMB	COMBUSTIBLES (ANALYZER MODIFIER)
COND	CONDUCTIVITY (ANALYZER MODIFIER)
DEN	DENSITY (ANALYZER MODIFIER)
DI	DIGITAL INPUT
DO	DIGITAL OUTPUT
DO	DISSOLVED OXYGEN (ANALYZER MODIFIER)
E/P	VOLTAGE TO PNEUMATIC
FO	FIBER OPTIC
H2S	HYDROGEN SULFIDE (ANALYZER MODIFIER)
HCL	HYDROGEN CHLORIDE (ANALYZER MODIFIER)
I/O	INPUT/OUTPUT
I/P	CURRENT TO PNEUMATIC
I/P	CURRENT TO PNEUMATIC
LEL	LOWER EXPLOSIVE LIMIT
OI	OPERATOR INTERFACE
O2	OXYGEN (ANALYZER MODIFIER)
P&ID	PROCESS AND INSTRUMENTATION DIAGRAM
SC	STREAMING CURRENT (ANALYZER MODIFIER)
SO2	SULFER DIOXIDE
SS	SUSPENDED SOLIDS (ANALYZER MODIFIER)
TURB	TURBIDITY (ANALYZER MODIFIER)
WAN	WIDE AREA NETWORK

CONTROL SWITCH NOTATION ABBREVIATIONS

XXX / XXX

ACK	ACKNOWLEDGE
ESTOP	EMERGENCY STOP
FAIL	FAILURE
FOR	FORWARD-OFF-REVERSE
FR	FORWARD-REVERSE
FS	FAST-SLOW
HA	HAND-AUTO
HOA	HAND-OFF-AUTO
HOR	HAND-OFF-REMOTE
LL	LEAD-LAG
LLS	LEAD-LAG-STANDBY
LOR	LOCAL-OFF-REMOTE
LR	LOCAL-REMOTE
LS	LEAD-STANDBY
MA	MANUAL-AUTO
OAC	OPEN-AUTO-CLOSE
OC	OPEN-CLOSE
OO	ON-OFF
OSC	OPEN-STOP-CLOSE
PB	PUSH-BUTTON
RJ	RUN-JOG
RJR	RUN-JOG-REVERSE
SIL	SILENCE
SS	START-STOP

PRIMARY ELEMENT SYMBOLOGY

- ULTRASONIC ELEMENT
- ORIFICE PLATE
- SONIC OR ULTRASONIC ELEMENT
- M — MAGNETIC FLOW ELEMENT
- V — VELOCITY FLOW ELEMENT
- PROPELLER OR TURBINE ELEMENT
- TD — MASS DISPERSION FLOW ELEMENT
- THERMAL MASS FLOW ELEMENT
- FLUME
- WEIR
- VENTURI TUBE
- FLOAT SWITCH
- M — MOTOR
- THERMOWELL
- DIAPHRAGM SEAL
- ANNULAR SEAL
- BUBBLER LEVEL TUBE
- ULTRASONIC LEVEL SENSOR
- RADAR LEVEL SENSOR
- CABLE SUSPENDED PRESSURE TRANSMITTER
- IN-LINE FLANGED DIAPHRAGM SEAL
- PITOT TUBE OR ANNUBAR
- FG — SIGHT FLOW GLASS
- FT — MASS DISPERSION FLOWMETER
- TE — TEMPERATURE ELEMENT WITH THERMOWELL
- FI — ROTOMETER
- SIGNAL ISOLATOR
- STOP PLATE

DUPLICATE INPUTS/OUTPUTS NOTATION

XXX / XXXX

INPUTS AND OUTPUTS (I/O) THAT APPLY TO EACH DEVICE LISTED BELOW

XX QUANTITY OF DEVICES THE I/O APPLIES TO

DEV-#### DEV-#### DEV-#### — LIST OF DEVICES THE I/O APPLIES TO; #### PPLIES TO EACH DEVICE'S TAGS

ISA PREDEFINED ABBREVIATIONS

ISA PREFIX	FIRST LETTER	SECOND LETTER	THIRD LETTER
AE	ANALYTICAL	ELEMENT	
AIT	ANALYTICAL	INDICATING	TRANSMITTER
ES	EMERGENCY	STOP	
ETM	ELAPSED	TIME	METER
FE	FLOW	ELEMENT	
FIT	FLOW	INDICATING	TRANSMITTER
FT	FLOW		TRANSMITTER
HSR	HAND	SWITCH	REMOTE
LI	LEVEL	INDICATION	
LIT	LEVEL	INDICATING	TRANSMITTER
LSH	LEVEL	SWITCH	HIGH
LSHH	LEVEL	SWITCH	HIGH-HIGH
LSL	LEVEL	SWITCH	LOW
LSLL	LEVEL	SWITCH	LOW-LOW
LT	LEVEL		TRANSMITTER
MSH	MOISTURE	INDICATION	HIGH
NI	STATUS	SWITCH	
PI	PRESSURE	INDICATION	
PIT	PRESSURE	INDICATING	TRANSMITTER
PSH	PRESSURE	SWITCH	HIGH
PSHH	PRESSURE	SWITCH	HIGH-HIGH
PSL	PRESSURE	SWITCH	LOW
SC	SPEED	COMMAND	
SI	SPEED	INDICATION	
TI	TEMPERATURE	INDICATION	
TIT	TEMPERATURE	INDICATING	TRANSMITTER
TE	TEMPERATURE	ELEMENT	
UA	MULTIVARIABLE	ALARM	
UU	MULTIVARIABLE	INFORMATION	
VE	VIBRATION	ELEMENT	
XC	START/STOP	COMMAND	
XCF	START/STOP	COMMAND	FORWARD
XCR	START STOP	COMMAND	REVERSE
XO	COMMAND	OPEN	
XR	COMMAND	RESET	
XS	COMMAND	SWITCH	
XSM	COMMAND	SWITCH	MASTER
XSS	COMMAND	SWITCH	STANDBY
XVC	COMMAND	VALVE	CLOSE
XVO	COMMAND	VALVE	OPEN
XVS	COMMAND	VALVE	STOP
ZF	POSITION	FORWARD	
ZR	POSITION	REVERSE	
ZS	POSITION	SWITCH	
ZSC	POSITION	SWITCH	CLOSE
ZSO	POSTION	SWITCH	OPEN

GENERAL NOTES:

A. THIS IS A STANDARD INSTRUMENTATION SYMBOLOGY AND ABBREVIATIONS SHEET. LISTING OF SYMBOLS AND ABBREVIATIONS DOES NOT IMPLY ALL SYMBOLS AND ABBREVIATIONS HAVE BEEN USED ON THIS PROJECT.

B. SCREENING OR SHADING OF WORK IS USED TO INDICATE EXISTING COMPONENTS OR TO DE-EMPHASIZE PROPOSED IMPROVEMENTS TO HIGHLIGHT SELECTED TRADE WORK. REFER TO CONTEXT OF EACH SHEET FOR USAGE.

Registered Professional Engineer (Electrical) CERTIFICATE NO. 85305 JOSEPHINE A BRAINARD Date Signed 4/10/2026 ARIZONA, U.S.A.

A/E FIRM	DESIGNED:	SUB SHEET NO.	TITLE OF SHEET	DRAWING NO.
PRIME: HDR ENGINEERING, INC. DENVER, CO 80202	J. BRAINARD	Y001	GENERAL INSTRUMENTATION AND CONTROLS LEGEND	113 182752A
	DRAWN: N. LYNCH			PMIS/PKG NO. 318719
	TECH. REVIEW: K CHANDRA			SHEET 77 OF 90
	DATE: JUNE 2026		NORTH RIM - GRAND CANYON NATIONAL PARK	

Autodesk Docs://10350545_NPS_GRCA_N_Rim_Utility_2026/10350545_000_GENERAL.rvt
4/27/2026 12:06:17 PM

MISC. (CONT.)

- VERTICAL TURBINE OR PROPELLER PUMP
- CENTRIFUGAL PUMP
- SUBMERSIBLE PUMP
- CHEMICAL FEED PUMP (ALL TYPES)
- PROGRESSING CAVITY PUMP
- BUBBLE TRAP
- ROTARY LOBE PUMP
- AIR COMPRESSOR WITH INTERGAL DRYER
- STATIC MIXER
- POSITIVE DISPLACEMENT BLOWER
- MEMBRANE
- DIFFUSERS
- PARSHALL FLUME
- MECHANICAL SCREEN
- MIXER
- SLIDE GATE
- CARRIER PIPE
- MIXER NOZZLE
- CALIBRATIONCOLUMN
- ACCUMULATOR
- EJECTOR / EDUCTOR
- INLINE FLOW CONDITIONER
- Y-TYPE STRAINER
- EXPANSION JOINT
- RS — REMOVABLE SPOOL
- PULSATION DAMPER
- FLEXIBLE HOSE
- ELECTRIC CORD WITH PLUG
- ELECTRIC CORD WITH RECEPTACLE
- AUTOFILTER
- CARTRIDGE FILTER
- INJECTION QUILL WITH CORPORATION STOP
- INJECTION QUILL WITH INTEGRAL CHECK VALVE
- S — SNUBBER
- SCREEN
- WEIGHT SCALE
- 120V FIT M — INTEGRAL MOUNTED MAGNETIC FLOW METER AND TRANSMITTER
- 120V FIT FE M — REMOTE MOUNTED MAGNETIC FLOW METER AND TRANSMITTER
- FLUSHING CONNECTION, CAM-LOK
- ED — EQUIPMENT DRAIN
- S — VENT SILENCER
- S — INLINE SILENCER
- DAMPER
- EXHAUST HEAD
- VENT COVER
- CONE STRAINER
- TEMPORARY STRAINER
- T-TYPE STRAINER
- DUPLEX STRAINER
- BACKFLOW PREVENTER
- AIR GAP
- RUPTURE DISK
- HEAT EXCHANGER
- CIRCUIT SETTER
- TRUE UNION
- THERMOMETER
- PIPE IN SECTION
- D — DRAIN (SECTION OR SCHEMATIC)
- FS — FLOOR SINK
- FLEXIBLE HOSE OR TUBING
- HEAT TRACE
- LINE SIZE CHANGE (CONCENTRIC REDUCER)
- LINE SIZE CHANGE (ECCENTRIC REDUCER)
- LINE TURNING DOWN
- LINE TURNING UP
- BLIND FLANGE
- PIPE BREAK
- PIPE JOINT (SEE SPECS FOR REQUIREMENTS)
- COMPRESSION SLEEVE TYPE COUPLING
- FLANGED COUPLING ADAPTER (FCA)
- FLEXIBLE CONNECTION
- HARNESSED MECHANICAL COUPLING
- TRAP
- QUICK DISCONNECT CAM & GROOVE COUPLING
- CAP OR PLUG
- CO — INTERIOR CLEANOUT
- HB-X — HOSE VALVE, HOSE BIBB, OR FLUSHING CONNECTION
- HR-X — HOSE RACK
- FD-X — FLOOR DRAIN

X = TYPE DESIGNATED IN SPECIFICATIONS

- ATA — AIR TOOL ASSEMBLY
- AVS — AUTOMATIC VALVE STATION
- PRS — PRESSURE-REDUCING STATION
- HB — HOSE BIBB
- HR — HOSE REEL
- AIR FILTER
- AIR DRYER
- TANK HEATER
- AIR RECEIVER
- UV UNIT
- VENT

GENERAL NOTES:

A. THIS IS A STANDARD INSTRUMENTATION SYMBOLOGY AND ABBREVIATIONS SHEET. LISTING OF SYMBOLS AND ABBREVIATIONS DOES NOT IMPLY ALL SYMBOLS AND ABBREVIATIONS HAVE BEEN USED ON THIS PROJECT.

B. SEE PROCESS, MECHANICAL AND PLUMBING LEGEND SHEET FOR MISCELLANEOUS PIPING SYMBOLS.

C. SCREENING OR SHADING OF WORK IS USED TO INDICATE EXISTING COMPONENTS OR TO DE-EMPHASIZE PROPOSED IMPROVEMENTS TO HIGHLIGHT SELECTED TRADE WORK. REFER TO CONTEXT OF EACH SHEET FOR USAGE.

D. VALVE SYMBOLS SHOWN HERE ARE APPLICABLE ONLY TO INSTRUMENTATION DIAGRAMS. SEE PROCESS, MECHANICAL AND PLUMBING LEGEND SHEET FOR VALVE SYMBOLS USED ELSEWHERE ON THE SHEETS.

Registered Professional Engineer (Electrical) CERTIFICATE NO. 85305 JOSEPHINE A BRAINARD Date Signed 4/10/2026 ARIZONA, U.S.A.

A/E FIRM	PRIME: HDR ENGINEERING, INC. DENVER, CO 80202
DESIGNED:	N. HUMPHREY
CADD	N. LYNCH
TECH. REVIEW:	B. LUSTER
DATE:	JUNE 2026
SUB SHEET NO.	Y002
TITLE OF SHEET	GENERAL INSTRUMENTATION AND CONTROLS LEGEND CONTINUED
	NORTH RIM - GRAND CANYON NATIONAL PARK
DRAWING NO.	113 182752A
PMIS/PKG NO.	318719
SHEET	78 OF 90

Autodesk Docs://10350545_NPS_GRCA_N_Rim_Utility_2026/10350545_130_GENERAL.rvt
3/31/2026 1:28:49 PM

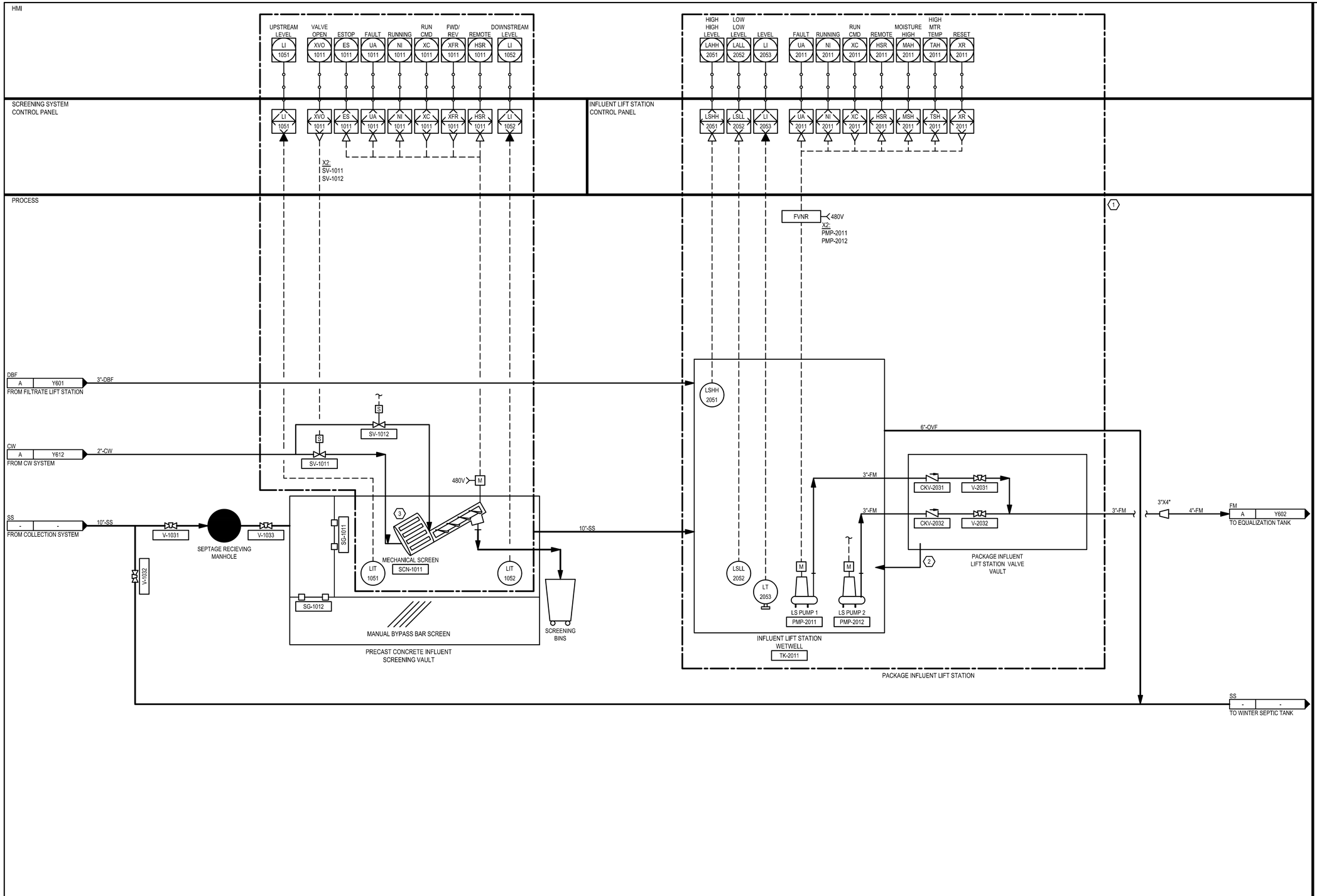

GENERAL NOTES:

A. P&IDS ARE NOT USED ON THIS PROJECT TO PROVIDE COMPLETE DETAIL OF ALL COMPONENTS TO BE PROVIDED FOR THE PROCESS SYSTEMS. THE PRIMARY FUNCTION OF THE P&IDS IS TO SHOW THE GENERAL INSTRUMENTS CONTROL FUNCTIONS AND SIGNALS ASSOCIATED WITH THE VENDOR PROCESS SYSTEMS.

B. I/O AND HMI FUNCTIONS SHOWN ARE REPRESENTATIVE AND MAY NOT INCLUDE COMPLETE FUNCTIONALITY OF THE VENDOR SYSTEMS.

KEYNOTES: (X)

1. ENTIRE PACKAGED INFLUENT LIFT STATION TO BE PROVIDED BY MANUFACTURER. SEE SPECIFICATION SECTION 33 32 16 FOR FULL PACKAGE REQUIREMENTS.
2. 2" DRAIN TO LIFT STATION. SEE PROCESS SHEETS FOR DETAILS.
3. MECHANICAL SCREEN PROVIDED WITH INTEGRAL WASHER/COMPACTOR.

Registered Professional Engineer (Civil) CERTIFICATE NO. 85332 CHRIS CARPENTER Date Signed 6/10/2026 ARIZONA U.S.A.

Registered Professional Engineer (Electrical) CERTIFICATE NO. 85305 JOSEPHINE A BRAINARD Date Signed 6/10/2026 ARIZONA U.S.A.

A/E FIRM	DESIGNED:	SUB SHEET NO.	TITLE OF SHEET	DRAWING NO.
PRIME: HDR ENGINEERING, INC. DENVER, CO 80202	J. BRAINARD P. HAYNES	Y601	INSTRUMENTATION AND CONTROLS INFLUENT SCREENING VAULT & LIFT STATION P&ID NORTH RIM - GRAND CANYON NATIONAL PARK	113 182752A
	R.D. CLARK			PMIS/PKG NO. 318719
	TECH. REVIEW: J. GLOVER			SHEET 79 OF 90
	DATE: JUNE 2026			

4/23/2026 Clark, Robin C:\Users\robclark\AppData\Local\Autodesk\AutoCAD Plant 3D\CollaborationCache\10350545 - NPS GRCA N. RIM UTILITIES\P&ID DWG\Y601.dwg

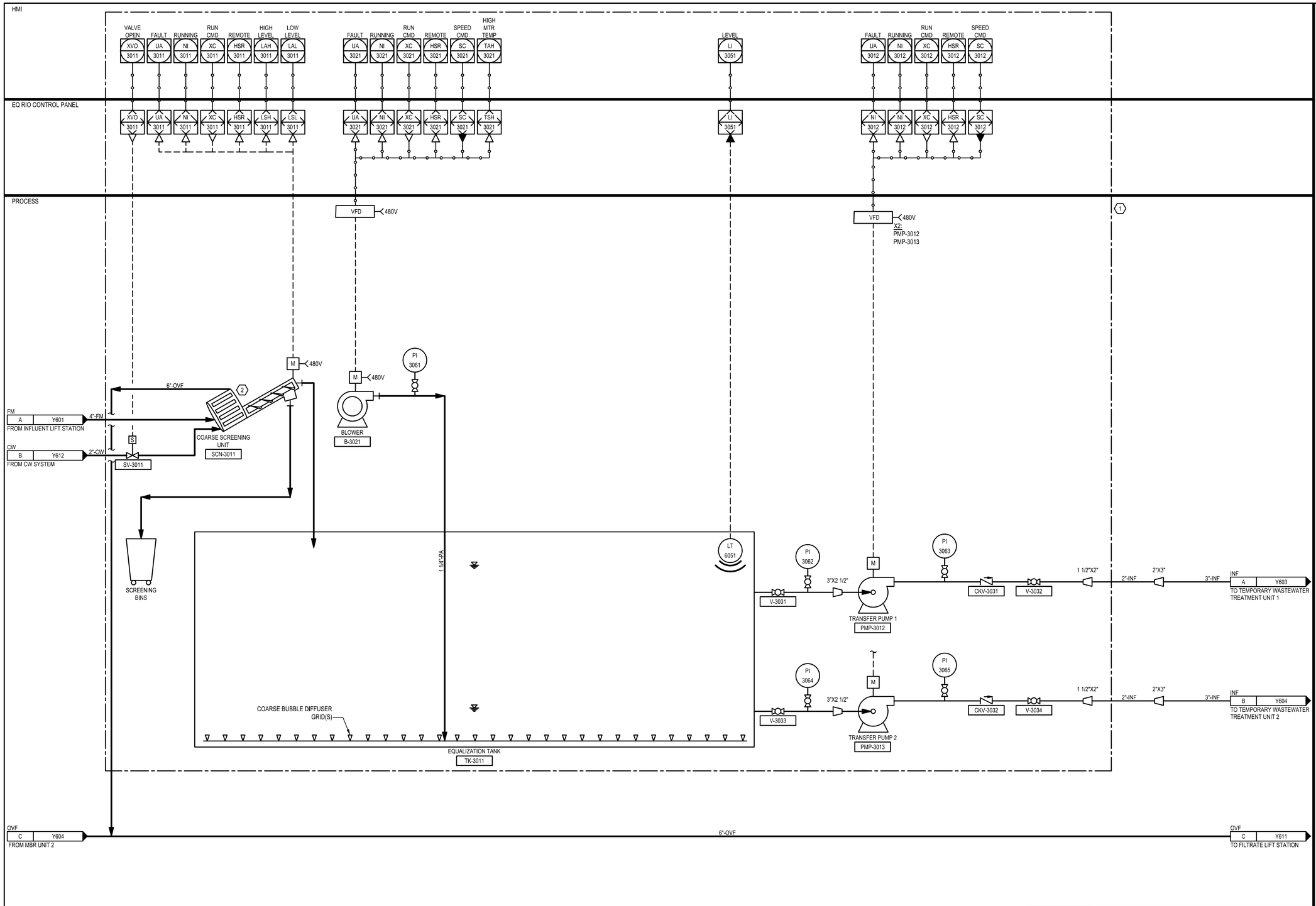

GENERAL NOTES:

A. P&IDS ARE NOT USED ON THIS PROJECT TO PROVIDE COMPLETE DETAIL OF ALL COMPONENTS TO BE PROVIDED FOR THE PROCESS SYSTEMS. THE PRIMARY FUNCTION OF THE P&IDS IS TO SHOW THE GENERAL INSTRUMENTS CONTROL FUNCTIONS AND SIGNALS ASSOCIATED WITH THE VENDOR PROCESS SYSTEMS.

B. I/O AND HMI FUNCTIONS SHOWN ARE REPRESENTATIVE AND MAY NOT INCLUDE COMPLETE FUNCTIONALITY OF THE VENDOR SYSTEMS.

KEYNOTES: (X)

1. ENTIRE EQUALIZATION TANK TO BE PROVIDED BY MANUFACTURER. SEE SPECIFICATION SECTION 46 07 53 FOR FULL PACKAGE REQUIREMENTS.

2. COARSE SCREEN PROVIDED WITH INTEGRAL WASHER/COMPACTOR.

Registered Professional Engineer (Civil) CERTIFICATE NO. 85332 CHRIS CARPENTER Date Signed 4/23/2026 ARIZONA U.S.A.

Registered Professional Engineer (Electrical) CERTIFICATE NO. 85305 JOSEPHINE A BRAINARD Date Signed 4/23/2026 ARIZONA U.S.A.

A/E FIRM	DESIGNED:	SUB SHEET NO.	TITLE OF SHEET	DRAWING NO.
PRIME: HDR ENGINEERING, INC. DENVER, CO 80202	J. BRAINARD P. HAYNES	Y602	INSTRUMENTATION AND CONTROLS EQUALIZATION TANK P&ID	113 182752A
	R.D. CLARK			PMIS/PKG NO. 318719
	TECH. REVIEW: J. GLOVER			SHEET 80 OF 90
	DATE: JUNE 2026		NORTH RIM - GRAND CANYON NATIONAL PARK	

4/23/2026 Clark, Robin C:\Users\robclark\AppData\Local\Autodesk\AutoCAD Plant 3D\CollaborationCache\10350545 - NPS GRCA N. RIM UTILITIES\PID DWGS\Y602.dwg

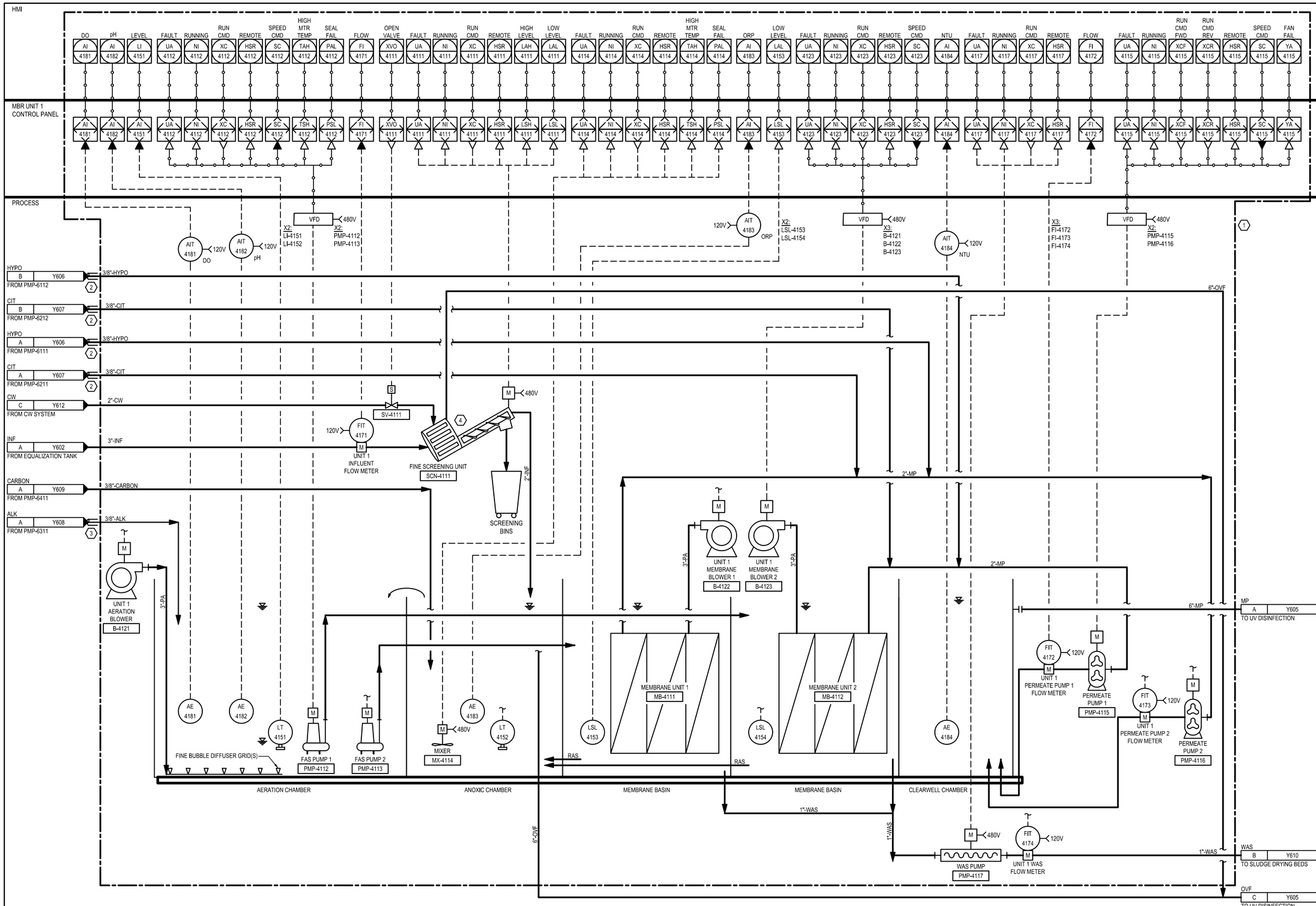

GENERAL NOTES:

A. P&IDS ARE NOT USED ON THIS PROJECT TO PROVIDE COMPLETE DETAIL OF ALL COMPONENTS TO BE PROVIDED FOR THE PROCESS SYSTEMS. THE PRIMARY FUNCTION OF THE P&IDS IS TO SHOW THE GENERAL INSTRUMENTS CONTROL FUNCTIONS AND SIGNALS ASSOCIATED WITH THE VENDOR PROCESS SYSTEMS.

B. I/O AND HMI FUNCTIONS SHOWN ARE REPRESENTATIVE AND MAY NOT INCLUDE COMPLETE FUNCTIONALITY OF THE VENDOR SYSTEMS.

KEYNOTES: (X)

1. ENTIRE MBR UNIT TO BE PROVIDED BY MANUFACTURER. SEE SPECIFICATION SECTION 46 07 53 FOR FULL PACKAGE REQUIREMENTS.
2. 3/8" TUBING WITHIN 4" HDPE CARRIER PIPE. SEE PROCESS DRAWINGS.
3. 3/8" TUBING WITHIN 2" HDPE CARRIER PIPE. SEE PROCESS DRAWINGS.
4. FINE SCREEN PROVIDED WITH INTEGRAL WASHER/COMPACTOR.

Registered Professional Engineer (Civil) CERTIFICATE NO. 85332 CHRIS CARPENTER DATE SIGNED 6/12/2026 ARIZONA U.S.A.

Registered Professional Engineer (Electrical) CERTIFICATE NO. 85305 JOSEPHINE A BRAINARD DATE SIGNED 6/12/2026 ARIZONA U.S.A.

A/E FIRM	DESIGNED:	SUB SHEET NO.	TITLE OF SHEET	DRAWING NO.
PRIME: HDR ENGINEERING, INC. DENVER, CO 80202	J. BRAINARD P. HAYNES	Y603	INSTRUMENTATION AND CONTROLS TEMPORARY WASTEWATER TREATMENT UNIT 1 P&ID	113 182752A
	R.D. CLARK			PMIS/PKG NO. 318719
	TECH. REVIEW: J. GLOVER			SHEET 81 OF 90
	DATE: JUNE 2026		NORTH RIM - GRAND CANYON NATIONAL PARK	

4/23/2026 Clark, Robin C:\Users\robclark\AppData\Local\Autodesk\AutoCAD Plant 3D\Collaboration\Cache\10350545 - NPS GRCA N. RIM UTILITIES\PID DWG\Y603.dwg

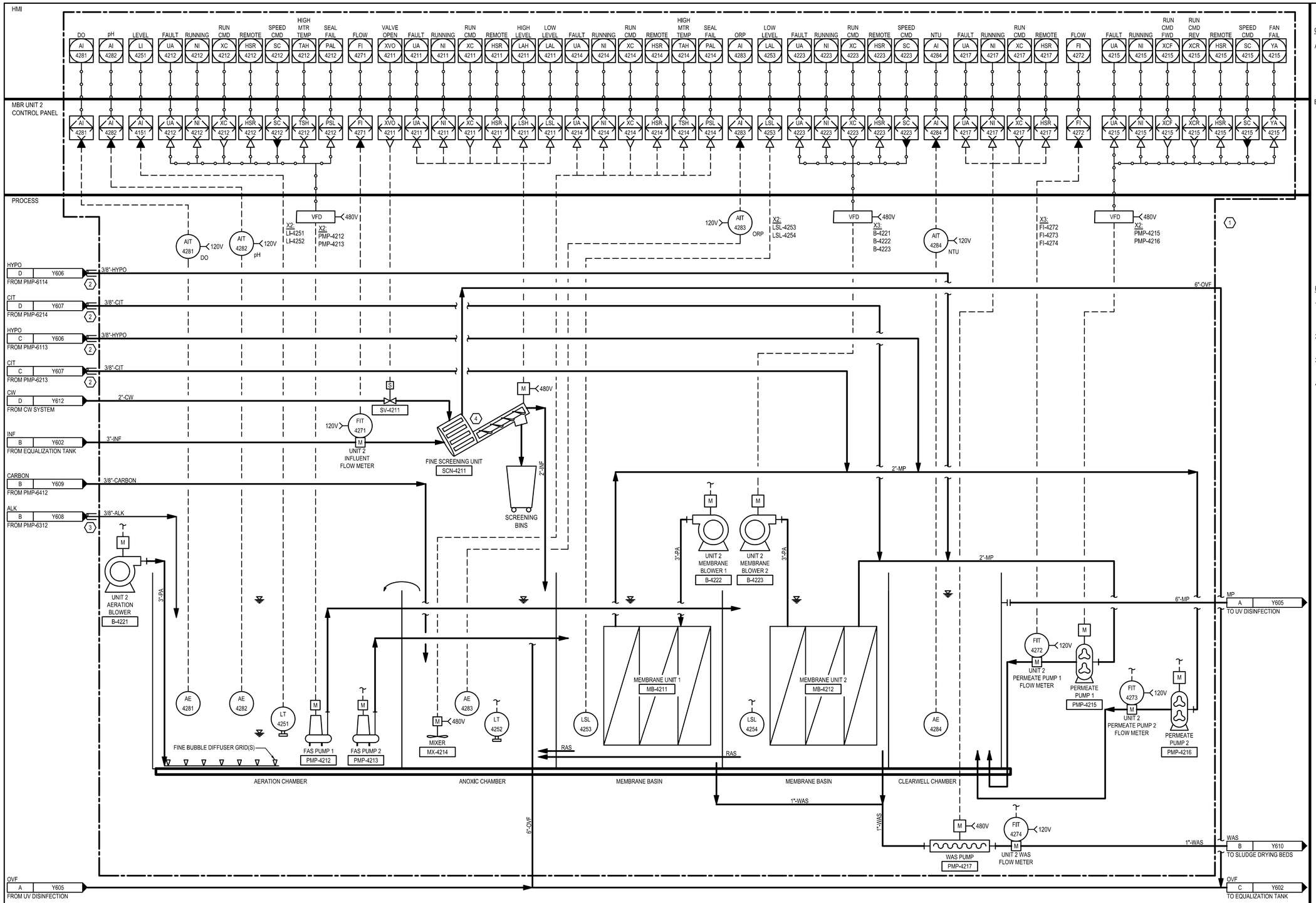

GENERAL NOTES:

A. P&IDS ARE NOT USED ON THIS PROJECT TO PROVIDE COMPLETE DETAIL OF ALL COMPONENTS TO BE PROVIDED FOR THE PROCESS SYSTEMS. THE PRIMARY FUNCTION OF THE P&IDS IS TO SHOW THE GENERAL INSTRUMENTS CONTROL FUNCTIONS AND SIGNALS ASSOCIATED WITH THE VENDOR PROCESS SYSTEMS.

B. I/O AND HMI FUNCTIONS SHOWN ARE REPRESENTATIVE AND MAY NOT INCLUDE COMPLETE FUNCTIONALITY OF THE VENDOR SYSTEMS.

KEYNOTES: (X)

1. ENTIRE MBR UNIT TO BE PROVIDED BY MANUFACTURER. SEE SPECIFICATION SECTION 46 07 53 FOR FULL PACKAGE REQUIREMENTS.
2. 3/8" TUBING WITHIN 4" HDPE CARRIER PIPE. SEE PROCESS DRAWINGS.
3. 3/8" TUBING WITHIN 2" HDPE CARRIER PIPE. SEE PROCESS DRAWINGS.
4. FINE SCREEN PROVIDED WITH INTEGRAL WASHER/COMPACTOR.

Registered Professional Engineer (Civil) CERTIFICATE NO. 85332 CHRIS CARPENTER DATE SIGNED 6/23/26 ARIZONA U.S.A.

Registered Professional Engineer (Electrical) CERTIFICATE NO. 85305 JOSEPHINE A BRAINARD Date Signed 6/23/26 ARIZONA U.S.A.

A/E FIRM	DESIGNED:	SUB SHEET NO.	TITLE OF SHEET	DRAWING NO.
PRIME: HDR ENGINEERING, INC. DENVER, CO 80202	J. BRAINARD P. HAYNES	Y604	INSTRUMENTATION AND CONTROLS TEMPORARY WASTEWATER TREATMENT UNIT 2 P&ID NORTH RIM - GRAND CANYON NATIONAL PARK	113 182752A
	R.D. CLARK			PMIS/PKG NO. 318719
	TECH. REVIEW: J. GLOVER			SHEET 82 OF 90
	DATE: JUNE 2026			

4/23/2026 Clark, Robin C.\Users\robclark\AppData\Local\Autodesk\AutoCAD Plant 3D\CollaborationCache\10350545 - NPS GRCA N. RIM UTILITIES\PID DWG\Y604.dwg

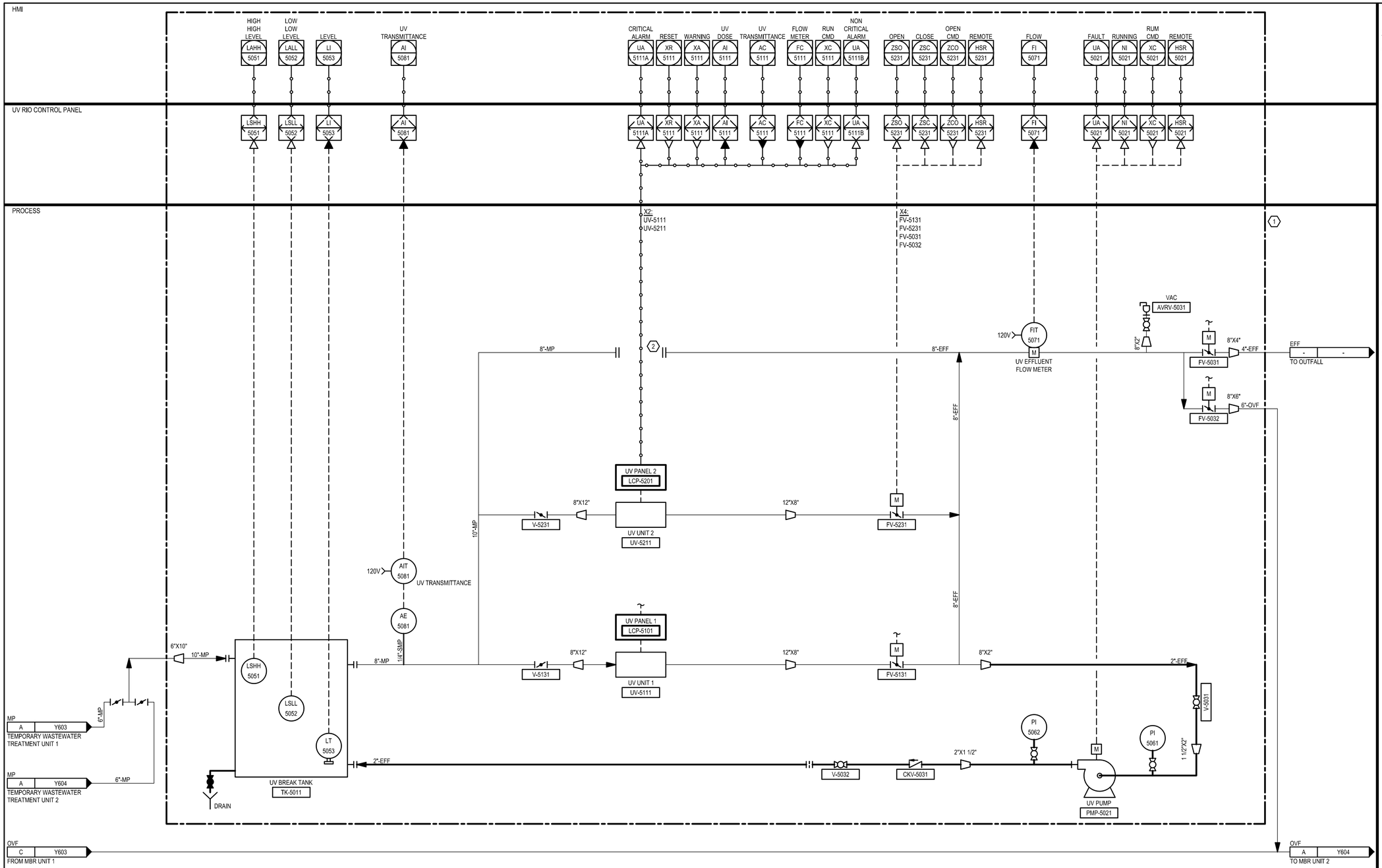

GENERAL NOTES:

A. P&IDS ARE NOT USED ON THIS PROJECT TO PROVIDE COMPLETE DETAIL OF ALL COMPONENTS TO BE PROVIDED FOR THE PROCESS SYSTEMS. THE PRIMARY FUNCTION OF THE P&IDS IS TO SHOW THE GENERAL INSTRUMENTS CONTROL FUNCTIONS AND SIGNALS ASSOCIATED WITH THE VENDOR PROCESS SYSTEMS.

B. I/O AND HMI FUNCTIONS SHOWN ARE REPRESENTATIVE AND MAY NOT INCLUDE COMPLETE FUNCTIONALITY OF THE VENDOR SYSTEMS.

KEYNOTES: (X)

1. ENTIRE UV DISINFECTION SYSTEM TO BE PROVIDED BY MANUFACTURER. SEE SPECIFICATION SECTION 46 07 53 FOR FULL PACKAGE REQUIREMENTS.

2. UV UNIT NOT INSTALLED.

Registered Professional Engineer (Civil) CERTIFICATE NO. 85332 CHRIS CARPENTER DATE SIGNED 1/30/2026 ARIZONA U.S.A.

Registered Professional Engineer (Electrical) CERTIFICATE NO. 85305 JOSEPHINE A BRAINARD Date Signed 01/30/2026 ARIZONA U.S.A.

A/E FIRM PRIME: HDR ENGINEERING, INC. DENVER, CO 80202	DESIGNED: J. BRAINARD P. HAYNES CADD R.D. CLARK TECH. REVIEW: J. GLOVER DATE: JUNE 2026	SUB SHEET NO. Y605	TITLE OF SHEET INSTRUMENTATION AND CONTROLS UV DISINFECTION P&ID NORTH RIM - GRAND CANYON NATIONAL PARK	DRAWING NO. 113 182752A PMIS/PKG NO. 318719 SHEET 83 OF 90

4/22/2026 Clark, Robin C:\Users\robclark\AppData\Local\Autodesk\AutoCAD Plant 3D\CollaborationCache\10350545 - NPS GRCA N. RIM UTILITIES\PID DWG\Y605.dwg

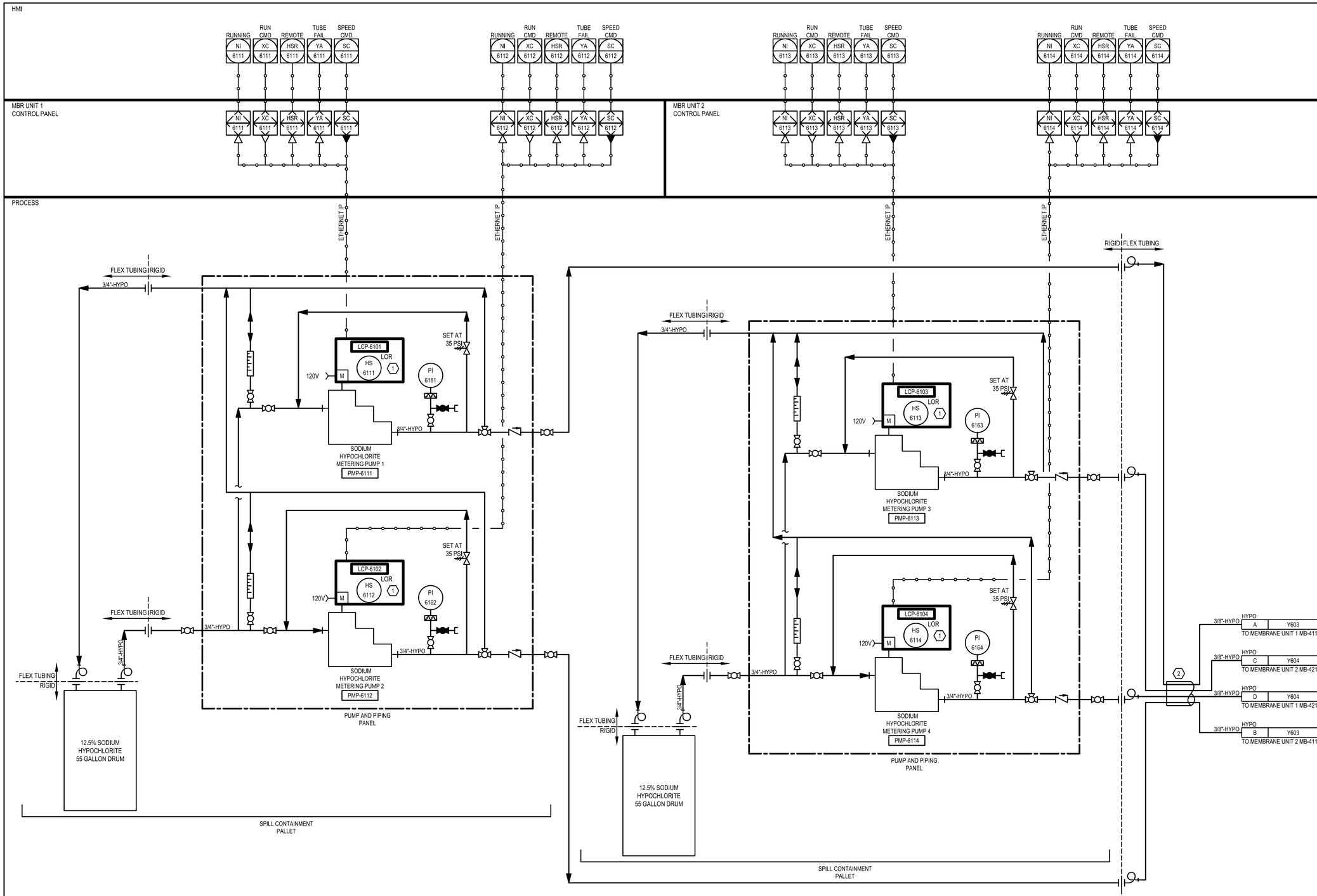

GENERAL NOTES:

A. SKID SUPPLIED WITHOUT METERING PUMPS. METERING PUMPS RELOCATED FROM MBR TREATMENT UNITS AND CONNECTED BACK TO MBR UNIT PLCS.

B. P&IDS ARE NOT USED ON THIS PROJECT TO PROVIDE COMPLETE DETAIL OF ALL COMPONENTS TO BE PROVIDED FOR THE PROCESS SYSTEMS. THE PRIMARY FUNCTION OF THE P&IDS IS TO SHOW THE GENERAL INSTRUMENTS CONTROL FUNCTIONS AND SIGNALS ASSOCIATED WITH THE VENDOR PROCESS SYSTEMS.

C. I/O AND HMI FUNCTIONS SHOWN ARE REPRESENTATIVE AND MAY NOT INCLUDE COMPLETE FUNCTIONALITY OF THE VENDOR SYSTEMS.

KEYNOTES: (X)

1. LOR SWITCH IS INTEGRAL TO THE FEED PUMPS.

2. 4" CARRIER PIPE FOR FOUR 3/8" HYPO LINES. TERMINATE CARRIER PIPE JUST INSIDE CHEMICAL CONTAINERS AND AT TREATMENT UNITS.

Registered Professional Engineer (Civil) CERTIFICATE NO. 85332 CHRIS CARPENTER Date Signed 6/10/2026 ARIZONA U.S.A.

Registered Professional Engineer (Electrical) CERTIFICATE NO. 85305 JOSEPHINE A BRAINARD Date Signed 6/10/2026 ARIZONA U.S.A.

A/E FIRM	DESIGNED:	SUB SHEET NO.	TITLE OF SHEET	DRAWING NO.
PRIME: HDR ENGINEERING, INC. DENVER, CO 80202	J. BRAINARD S. MAAZ	Y606	INSTRUMENTATION AND CONTROLS SODIUM HYPOCHLORITE P&ID	113 182752A
	R.D. CLARK			PMIS/PKG NO. 318719
	TECH. REVIEW: J. GLOVER			SHEET 84 OF 90
	DATE: JUNE 2026		NORTH RIM - GRAND CANYON NATIONAL PARK	

4/22/2026 Clark, Robin C:\Users\robclark\AppData\Local\Autodesk\AutoCAD Plant 3D\Collaboration\Cache\10350545 - NPS GRCA N. RIM UTILITIES\P\D DWG\Y606.dwg

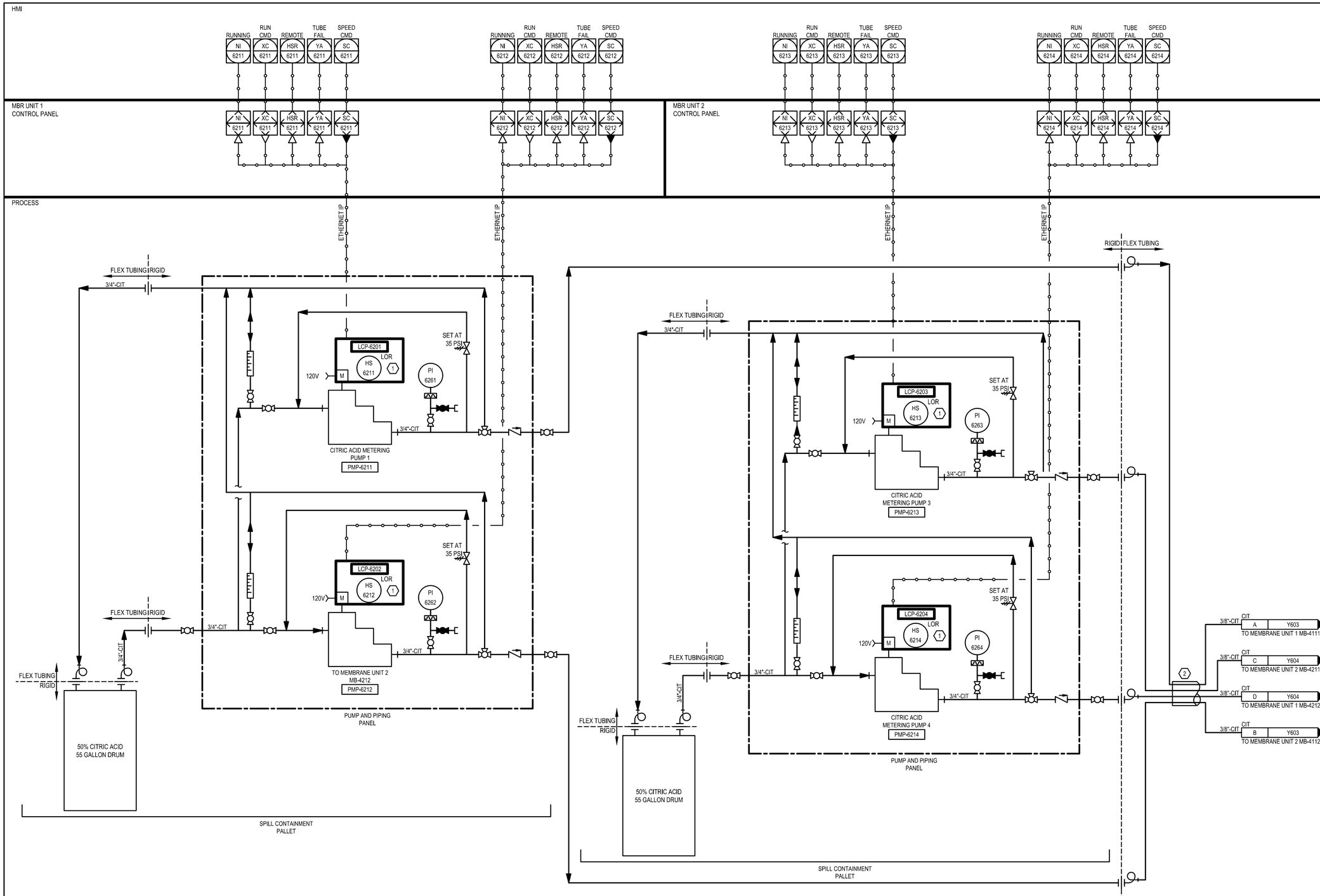

GENERAL NOTES:

A. SKID SUPPLIED WITHOUT METERING PUMPS. METERING PUMPS RELOCATED FROM MBR TREATMENT UNITS AND CONNECTED BACK TO MBR UNIT PLCS.

B. P&IDS ARE NOT USED ON THIS PROJECT TO PROVIDE COMPLETE DETAIL OF ALL COMPONENTS TO BE PROVIDED FOR THE PROCESS SYSTEMS. THE PRIMARY FUNCTION OF THE P&IDS IS TO SHOW THE GENERAL INSTRUMENTS CONTROL FUNCTIONS AND SIGNALS ASSOCIATED WITH THE VENDOR PROCESS SYSTEMS.

C. I/O AND HMI FUNCTIONS SHOWN ARE REPRESENTATIVE AND MAY NOT INCLUDE COMPLETE FUNCTIONALITY OF THE VENDOR SYSTEMS.

KEYNOTES: (X)

1. LOR SWITCH IS INTEGRAL TO THE FEED PUMPS.

2. 4" CARRIER PIPE FOR FOUR 3/8" CIT LINES. TERMINATE CARRIER PIPE JUST INSIDE CHEMICAL CONTAINERS AND AT TREATMENT UNITS.

Registered Professional Engineer (Civil) CERTIFICATE NO. 85332 CHRIS CARPENTER Date Signed 6/10/2026 ARIZONA U.S.A.

Registered Professional Engineer (Electrical) CERTIFICATE NO. 85305 JOSEPHINE A BRAINARD Date Signed 6/10/2026 ARIZONA U.S.A.

A/E FIRM PRIME: HDR ENGINEERING, INC. DENVER, CO 80202	DESIGNED: J. BRAINARD S. MAAZ CADD R.D. CLARK TECH. REVIEW: J. GLOVER DATE: JUNE 2026	SUB SHEET NO. Y607	TITLE OF SHEET INSTRUMENTATION AND CONTROLS CITRIC ACID SYSTEM P&ID NORTH RIM - GRAND CANYON NATIONAL PARK	DRAWING NO. 113 182752A PMIS/PKG NO. 318719 SHEET 85 OF 90

4/21/2026 Clark, Robin C:\Users\robclark\AppData\Local\Autodesk\AutoCAD Plant 3D\Collaboration\Cache\10350545 - NPS GRCA N. RIM UTILITIES\P\ID DWG\Y607.dwg

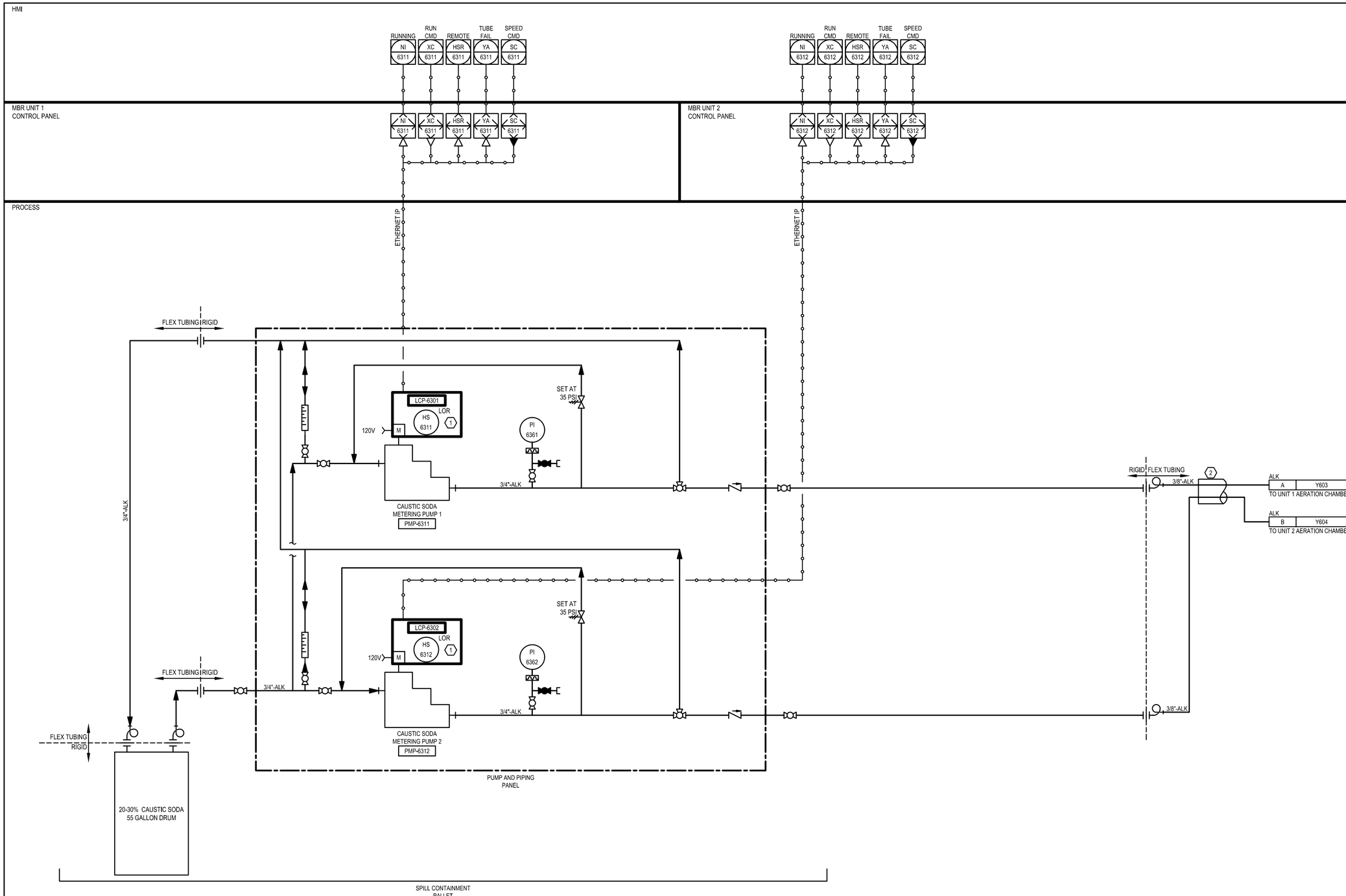

GENERAL NOTES:

A. SKID SUPPLIED WITHOUT METERING PUMPS. METERING PUMPS RELOCATED FROM MBR TREATMENT UNITS AND CONNECTED BACK TO MBR UNIT PLCS.

B. P&IDS ARE NOT USED ON THIS PROJECT TO PROVIDE COMPLETE DETAIL OF ALL COMPONENTS TO BE PROVIDED FOR THE PROCESS SYSTEMS. THE PRIMARY FUNCTION OF THE P&IDS IS TO SHOW THE GENERAL INSTRUMENTS CONTROL FUNCTIONS AND SIGNALS ASSOCIATED WITH THE VENDOR PROCESS SYSTEMS.

C. I/O AND HMI FUNCTIONS SHOWN ARE REPRESENTATIVE AND MAY NOT INCLUDE COMPLETE FUNCTIONALITY OF THE VENDOR SYSTEMS.

KEYNOTES: (X)

1. LOR SWITCH IS INTEGRAL TO THE FEED PUMPS.

2. 2" CARRIER PIPE FOR TWO 3/8" ALK LINES. TERMINATE CARRIER PIPE JUST INSIDE CHEMICAL CONTAINERS AND AT TREATMENT UNITS.

Registered Professional Engineer (Civil) CERTIFICATE NO. 85332 CHRIS CARPENTER DATE SIGNED 6/12/2026 ARIZONA U.S.A.

Registered Professional Engineer (Electrical) CERTIFICATE NO. 85305 JOSEPHINE A BRAINARD Date Signed 6/12/2026 ARIZONA U.S.A.

A/E FIRM	DESIGNED:	SUB SHEET NO.	TITLE OF SHEET	DRAWING NO.
PRIME: HDR ENGINEERING, INC. DENVER, CO 80202	J. BRAINARD S. MAAZ	Y608	INSTRUMENTATION AND CONTROLS CAUSTIC SODA SYSTEM P&ID	113 182752A
	CADD R.D. CLARK			PMIS/PKG NO. 318719
	TECH. REVIEW: J. GLOVER			SHEET 86 OF 90
	DATE: JUNE 2026		NORTH RIM - GRAND CANYON NATIONAL PARK	

4/22/2026 Clark, Robin C:\Users\robclark\AppData\Local\Autodesk\AutoCAD Plant 3D\CollaborationCache\10350545 - NPS GRCA N. RIM UTILITIES\PID DWGS\Y608.dwg

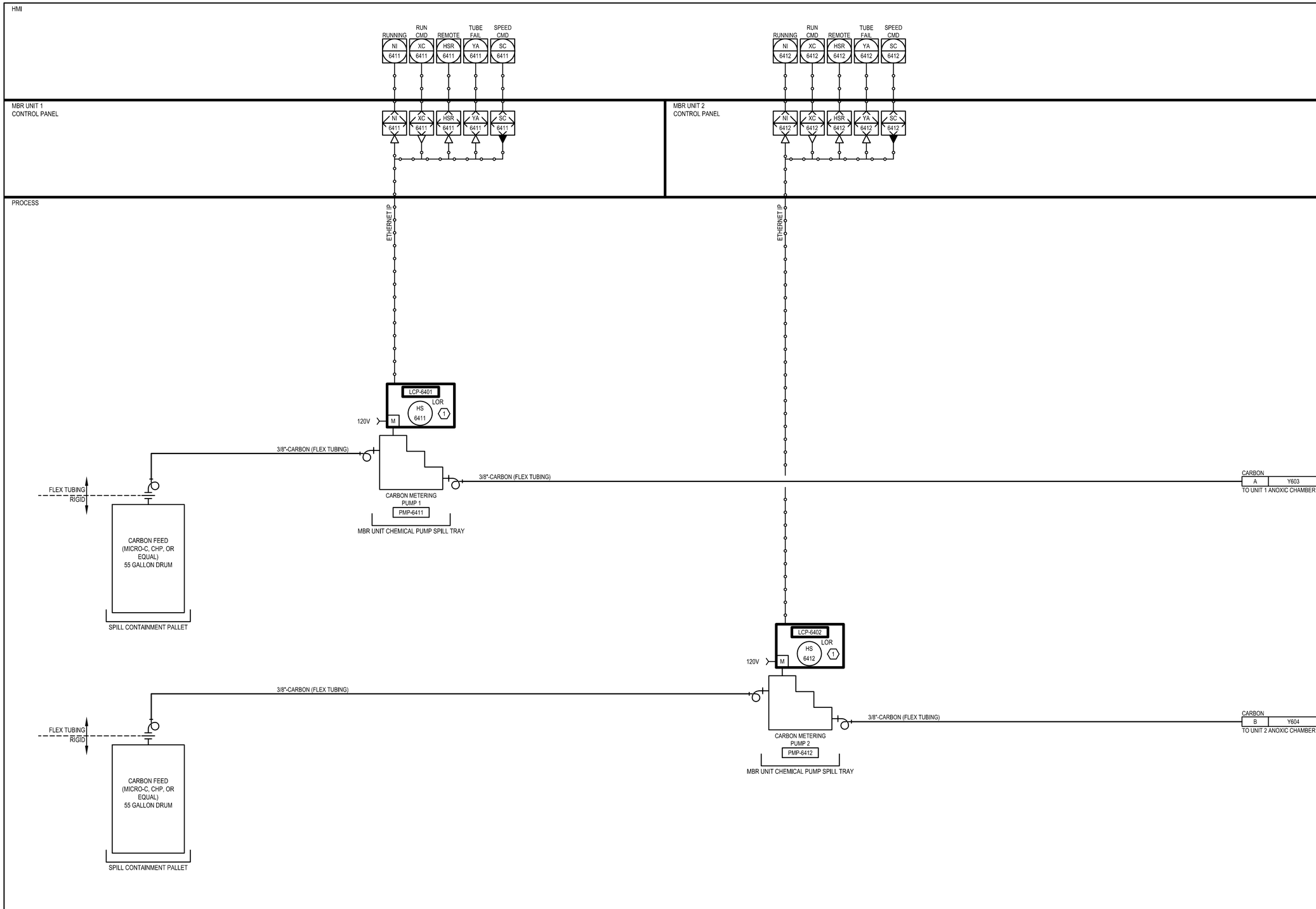

GENERAL NOTES:

A. SINGLE PUMP MOUNTED ON EACH MBR UNIT.

B. CHEMICAL DRUM SPILL CONTAINMENT PALLETS TO BE PROVIDED BY CONTRACTOR.

C. P&IDS ARE NOT USED ON THIS PROJECT TO PROVIDE COMPLETE DETAIL OF ALL COMPONENTS TO BE PROVIDED FOR THE PROCESS SYSTEMS. THE PRIMARY FUNCTION OF THE P&IDS IS TO SHOW THE GENERAL INSTRUMENTS CONTROL FUNCTIONS AND SIGNALS ASSOCIATED WITH THE VENDOR PROCESS SYSTEMS.

D. I/O AND HMI FUNCTIONS SHOWN ARE REPRESENTATIVE AND MAY NOT INCLUDE COMPLETE FUNCTIONALITY OF THE VENDOR SYSTEMS.

KEYNOTES: (X)

1. LOR SWITCH IS INTEGRAL TO THE FEED PUMPS.

Registered Professional Engineer (Civil) CERTIFICATE NO. 85332 CHRIS CARPENTER DATE SIGNED 4/20/26 ARIZONA U.S.A.

Registered Professional Engineer (Electrical) CERTIFICATE NO. 85305 JOSEPHINE A BRAINARD Date Signed 4/20/26 ARIZONA U.S.A.

A/E FIRM	DESIGNED:	SUB SHEET NO.	TITLE OF SHEET	DRAWING NO.
PRIME: HDR ENGINEERING, INC. DENVER, CO 80202	J. BRAINARD S. MAAZ	Y609	INSTRUMENTATION AND CONTROLS SUPPLEMENTAL CARBON P&ID	113 182752A
	R.D. CLARK			PMIS/PKG NO. 318719
	TECH. REVIEW: J. GLOVER			SHEET 87 OF 90
	DATE: JUNE 2026		NORTH RIM - GRAND CANYON NATIONAL PARK	

4/21/2026 Clark, Robin C:\Users\robclark\AppData\Local\Autodesk\AutoCAD Plant 3D\CollaborationCache\10350545 - NPS GRCA N. RIM UTILITIES\P&ID DWGS\Y609.dwg

HMI

PLC

PROCESS

Registered Professional Engineer (Civil) CERTIFICATE NO. 85332 CHRIS CARPENTER Date Signed 6/10/2026 ARIZONA U.S.A.

Registered Professional Engineer (Electrical) CERTIFICATE NO. 85305 JOSEPHINE A BRAINARD Date Signed 6/10/2026 ARIZONA U.S.A.

A/E FIRM PRIME: HDR ENGINEERING, INC. DENVER, CO 80202	DESIGNED: J. BRAINARD P. HAYNES CADD R.D. CLARK TECH. REVIEW: J. GLOVER DATE: JUNE 2026	SUB SHEET NO. Y610	TITLE OF SHEET INSTRUMENTATION AND CONTROLS SLUDGE DRYING BEDS P&ID NORTH RIM - GRAND CANYON NATIONAL PARK	DRAWING NO. 113 182752A PMIS/PKG NO. 318719 SHEET 88 OF 90

4/21/2026 Clark, Robin C:\Users\robclark\AppData\Local\Autodesk\AutoCAD Plant 3D\Collaboration\Cache\10350545 - NPS GRCA N. RIM UTILITIES\P\ID DWG\Y610.dwg

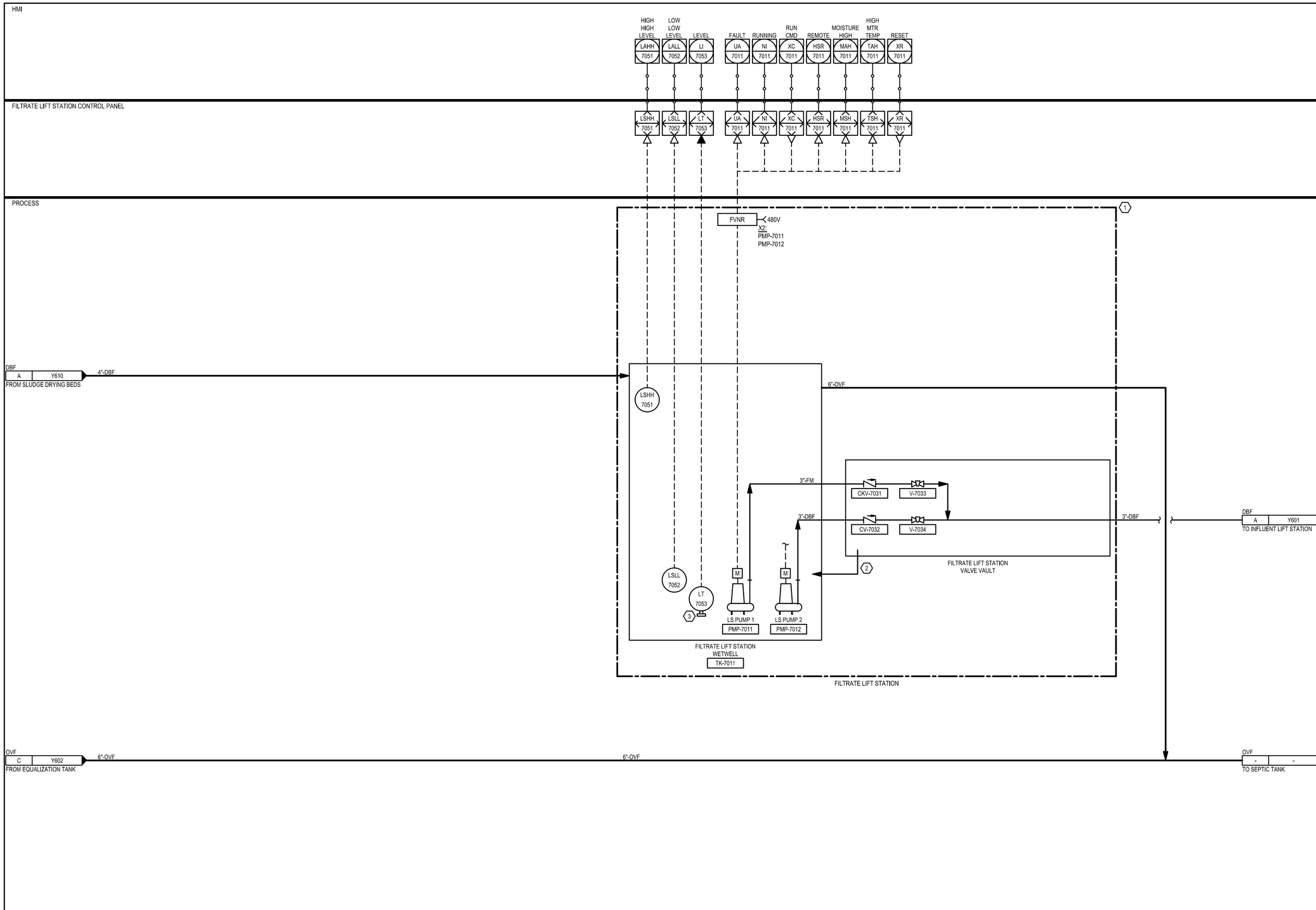

GENERAL NOTES:

A. P&IDS ARE NOT USED ON THIS PROJECT TO PROVIDE COMPLETE DETAIL OF ALL COMPONENTS TO BE PROVIDED FOR THE PROCESS SYSTEMS. THE PRIMARY FUNCTION OF THE P&IDS IS TO SHOW THE GENERAL INSTRUMENTS CONTROL FUNCTIONS AND SIGNALS ASSOCIATED WITH THE VENDOR PROCESS SYSTEMS.

B. I/O AND HMI FUNCTIONS SHOWN ARE REPRESENTATIVE AND MAY NOT INCLUDE COMPLETE FUNCTIONALITY OF THE VENDOR SYSTEMS.

KEYNOTES:

1. ENTIRE PACKAGED INFLUENT LIFT STATION TO BE PROVIDED BY MANUFACTURER. SEE SPECIFICATION SECTION 33 32 16 FOR FULL PACKAGE REQUIREMENTS.

2. 2" DRAIN TO LIFT STATION. SEE PROCESS SHEETS FOR DETAILS.

3. LOCATE LEVEL INSTRUMENT WITHIN STILLING COLUMN.

Registered Professional Engineer (Civil) CERTIFICATE NO. 85332 CHRIS CARPENTER Date Signed 4/10/2026 ARIZONA U.S.A.

Registered Professional Engineer (Electrical) CERTIFICATE NO. 85305 JOSEPHINE A BRAINARD Date Signed 4/10/2026 ARIZONA U.S.A.

A/E FIRM PRIME: HDR ENGINEERING, INC. DENVER, CO 80202	DESIGNED: J. BRAINARD P. HAYNES DADE R.D. CLARK TECH. REVIEW: J. GLOVER DATE: JUNE 2026	SUB SHEET NO. Y611	TITLE OF SHEET INSTRUMENTATION AND CONTROLS FILTRATE LIFT STATION P&ID NORTH RIM - GRAND CANYON NATIONAL PARK	DRAWING NO. 113 182752A PMIS/PKG NO. 318719 SHEET 89 OF 90

4/23/2026 Clark, Robin C:\Users\robiclark\AppData\Local\Autodesk\AutoCAD Plant 3D\CollaborationCache\10350545 - NPS GRCA N. RIM UTILITIES\PID DWG\Y611.dwg

HMI

PLC

PROCESS

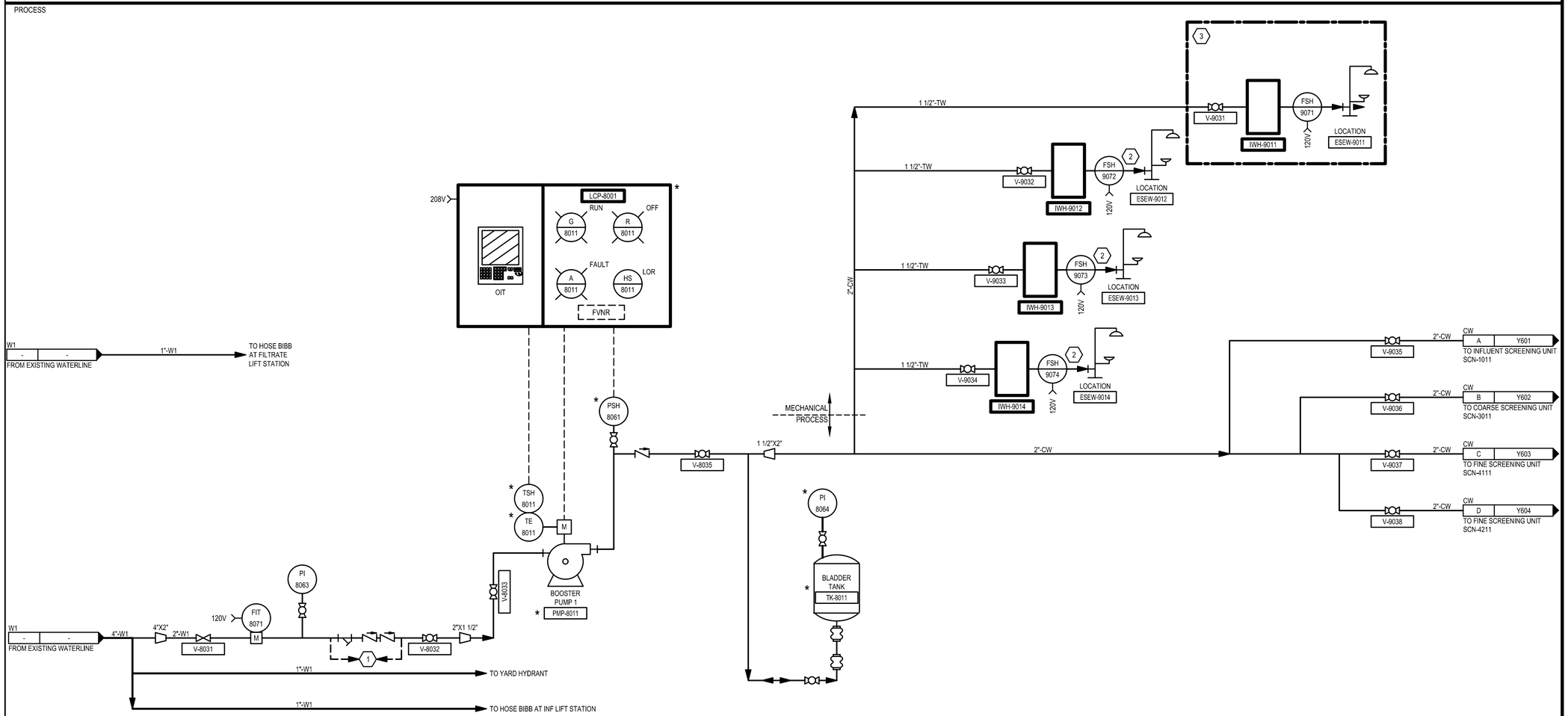

GENERAL NOTES:

A. P&IDS ARE NOT USED ON THIS PROJECT TO PROVIDE COMPLETE DETAIL OF ALL COMPONENTS TO BE PROVIDED FOR PROCESS SYSTEMS. THE PRIMARY FUNCTION OF THE P&IDS IS TO SHOW THE GENERAL INSTRUMENTS CONTROL FUNCTIONS AND SIGNALS ASSOCIATED WITH THE VENDOR PROCESS SYSTEMS.

B. I/O AND HMI FUNCTIONS SHOWN ARE REPRESENTATIVE AND MAY NOT INCLUDE COMPLETE FUNCTIONALITY OF THE VENDOR SYSTEMS.

C. * = SUPPLIED BY BOOSTER PUMP MANUFACTURER.

KEYNOTES: (X)

1. REDUCED PRESSURE ZONE ASSEMBLY.
2. INSTRUMENTATION PROVIDED AS PART OF EACH ESEW ASSEMBLY, OPTIONAL WIRING FOR FUTURE USE.
3. EQUIPMENT AND INSTRUMENTATION PROVIDED BY PORTABLE LAB MANUFACTURER.

Registered Professional Engineer (Civil) CERTIFICATE NO. 85332 CHRIS CARPENTER DATE SIGNED ARIZONA U.S.A.

Registered Professional Engineer (Electrical) CERTIFICATE NO. 85305 JOSEPHINE A BRAINARD Date Signed 7/20/2026 ARIZONA U.S.A.

A/E FIRM	DESIGNED:	SUB SHEET NO.	TITLE OF SHEET	DRAWING NO.
PRIME: HDR ENGINEERING, INC. DENVER, CO 80202	J. BRAINARD S. MAAZ	Y612	INSTRUMENTATION AND CONTROLS MISCELLANEOUS SYSTEMS P&ID	113 182752A
	R.D. CLARK			PMIS/PKG NO. 318719
	TECH. REVIEW: J. GLOVER			SHEET 90 OF 90
	DATE: JUNE 2026		NORTH RIM - GRAND CANYON NATIONAL PARK	

4/23/2026 Clark, Robin C:\Users\robclark\AppData\Local\Autodesk\AutoCAD Plant 3D\CollaborationCache\10350545 - NPS GRCA N. RIM UTILITIES\PID DWG\Y612.dwg