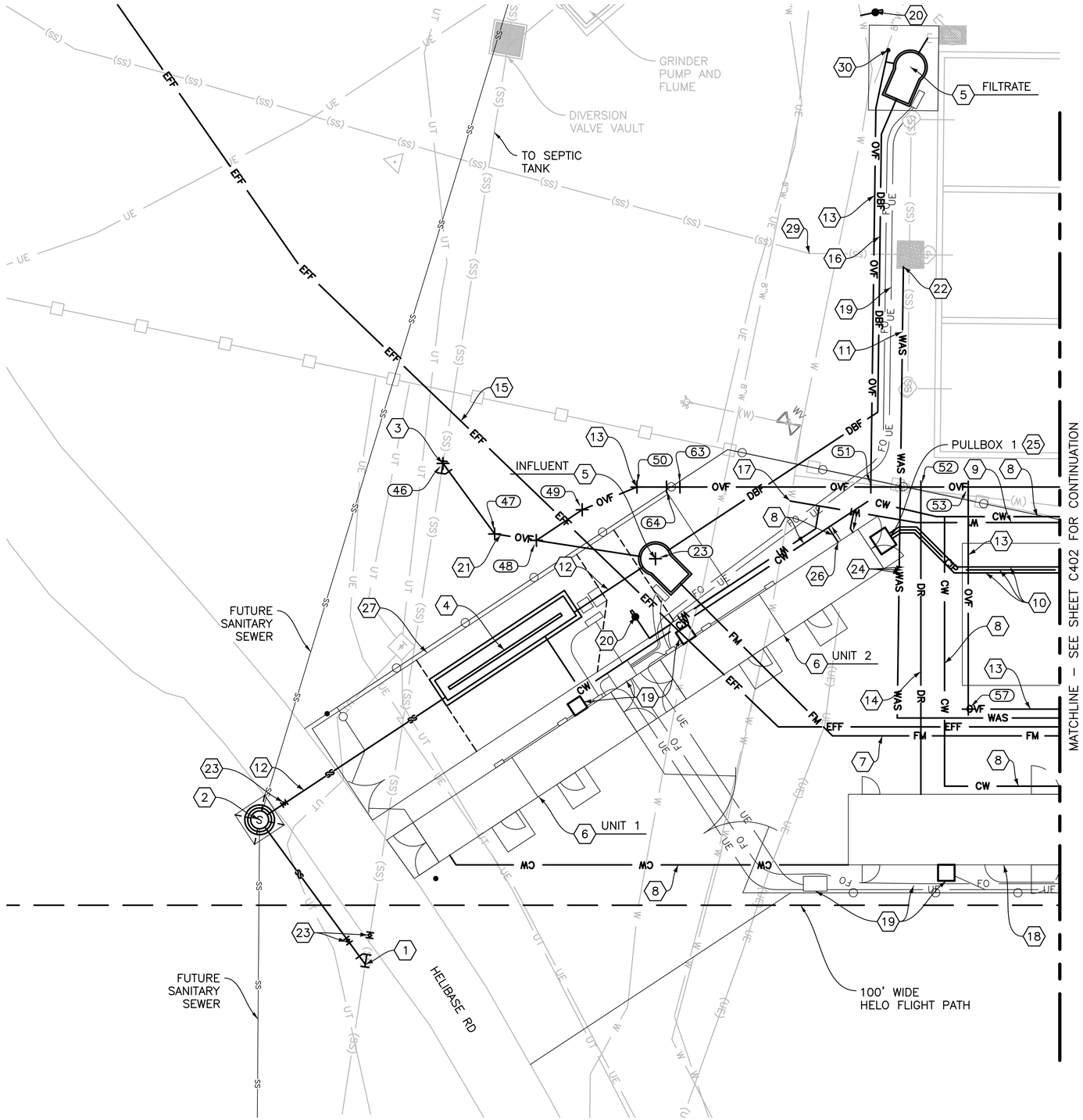

GENERAL NOTES:

A. DRAWINGS REFLECT SURVEY DATA OF FEATURES AND CONDITIONS PRESENT PRIOR TO THE DRAGON BRAVO FIRE IN 2025. CONTRACTOR TO COORDINATE WITH COR REGARDING CHANGES IN EXISTING CONDITIONS PER SPECIFICATION 01 11 00 SUMMARY OF WORK.

B. CONTRACTOR TO FIELD VERIFY DEPTH AND LOCATION OS ALL EXISTING UTILITIES.

C. ALL YARD PIPING AND APPURTENANCES SHALL BE FULLY RESTRAINED.

D. ALL PIPE CONNECTIONS BETWEEN TEMPORARY WWTP PIPING AND YARD PIPING SHALL BE MADE USING DISSIMILAR PIPE TRANSITION COUPLER.

E. CONTRACTOR IS RESPONSIBLE FOR RE–DESIGN OF ALL SITE UTILITIES IF DIFFERENT MANUFACTURER IS SELECTED OTHER THAN THE BASIS OF DESIGN.

F. SEE SHEET C802 FOR OVF PROFILES AND POINT TABLE.

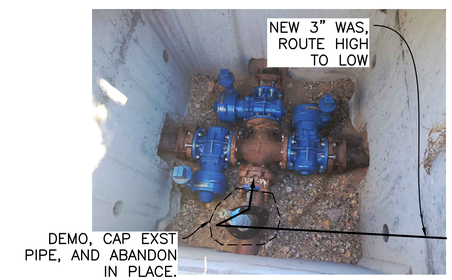

EXIST DRYING BED WAS INLET SPLITTER VAULT

KEY NOTES (CONT'D): (X)

25. SEE DETAIL 02/C506 FOR PULLBOX DETAIL.

26. SEE PROCESS SHEETS FOR W1 AND CW CONNECTION LOCATIONS.

27. CONCRETE SIDEWALK SHEET C102 FOR INFORMATION.

28. 6" PVC CLEANOUT.

29. DISCONNECT AND INSTALL DI CAP ON EXISTING SS TO SLUDGE DRYING BEDS. ABANDONMENT SHALL BE WITHIN EXISTING STRUCTURE DRYING BED INLET SPLITTER.

30. 4" SANITARY CLEAN OUT. SEE 02/C501 FOR DETAILS.

KEY NOTES: (X)

1. CONNECT DIVERSION TO EXISTING SANITARY SEWER BY CUT IN 10"X10"X10" WYE CONNECTION. SEE SHEET C801 FOR CONNECTION TO INFLUENT LIFT STATION DETAILS.

2. 48" SEPTAGE RECEIVING MANHOLE. SEE PLAN AND PROFILE SHEET C801 FOR DETAILS. SEE 03/C501 FOR TYPICAL MANHOLE DETAILS.

3. CONNECT OVERFLOW TO EXISTING SANITARY SEWER BY CUTTING IN WYE CONNECTION.

4. MECHANICAL SCREEN VAULT.

5. 5' DIA. LIFT STATION.

6. 40'X8' CONEX STORAGE CONTAINER (RETROFITTED).

7. 4" HDPE FORCEMAIN (FM).

8. 2" HDPE (CW).

9. 4" HDPE FINISHED WATER (W1).

10. 4" SCH 80 PIPE SLEEVE, QUANTITY OF 3 (CIP).

11. 3" HDPE (WAS).

12. 10" SDR 35 (SS).

13. 6" SDR 35 (OVF).

14. 4" SDR 35 (DR).

15. 4" HDPE (EFF).

16. 3" HDPE FORCEMAIN (DBF).

17. CONNECT TO EXISTING 8" WATER MAIN USING AN 8"X4" WET TAP.

18. 50'X12' WASTEWATER LAB.

19. ELECTRICAL EQUIPMENT AND CONDUIT. SEE SHEET E103 FOR ELECTRICAL SITE PLAN.

20. FREEZE RESISTANT YARD HYDRANT. SEE DETAIL 01/C502. CONNECT TO EXISTING 8" WATERLINE BY WET TAP SADDLE.

21. 8" SDR 35 (OVF).

22. CORE DRILL EXISTING VAULT. INSIDE VAULT INSTALL VERTICAL 90° BEND AND HORIZONTAL 90° BEND TO CONNECT TO EXISTING DRYING BED INLET SPLITTER. DEMO EXISTING PORT ON INLET LINE (SEE PICTURE, THIS SHEET.

23. 10" PLUG VALVE INSTALLED WITHIN 5' OF WYE CONNECTION AND SEPTAGE RECEIVING MANHOLE.

24. SEE ELECTRICAL SWEEP DETAILS FOR CIP CONDUIT.

10 0 10 20
SCALE OF FEET

Registered Professional Engineer (Civil) CERTIFICATE NO. 75262 GREGORY YOUNG Date Signed 6-10-26 ARIZONA, U.S.A.

A/E FIRM	DESIGNED:	SUB SHEET NO.	TITLE OF SHEET	DRAWING NO.
PRIME: HDR ENGINEERING, INC. DENVER, CO 80202	G. YOUNG CADD P. OXBORROW TECH. REVIEW: M. GOUGH DATE: JUNE 2026	C401	SITEWORK TEMPORARY WWTP YARD PIPING ENLARGED PLAN 1 NORTH RIM – GRAND CANYON NATIONAL PARK	113 182752A PMIS/PKG NO. 318719 SHEET 14 OF 90

6/5/2026 Oxborrow, Paul C:\Users\POXBORRO\DC\ACCDocs\HDR\10350545_NPS_GRCA_N_Rim_Utility_2026\Project Files\CAD_HDR\DRAWINGS\TEMPORARY WASTEWATER\CIVIL\C401.dwg

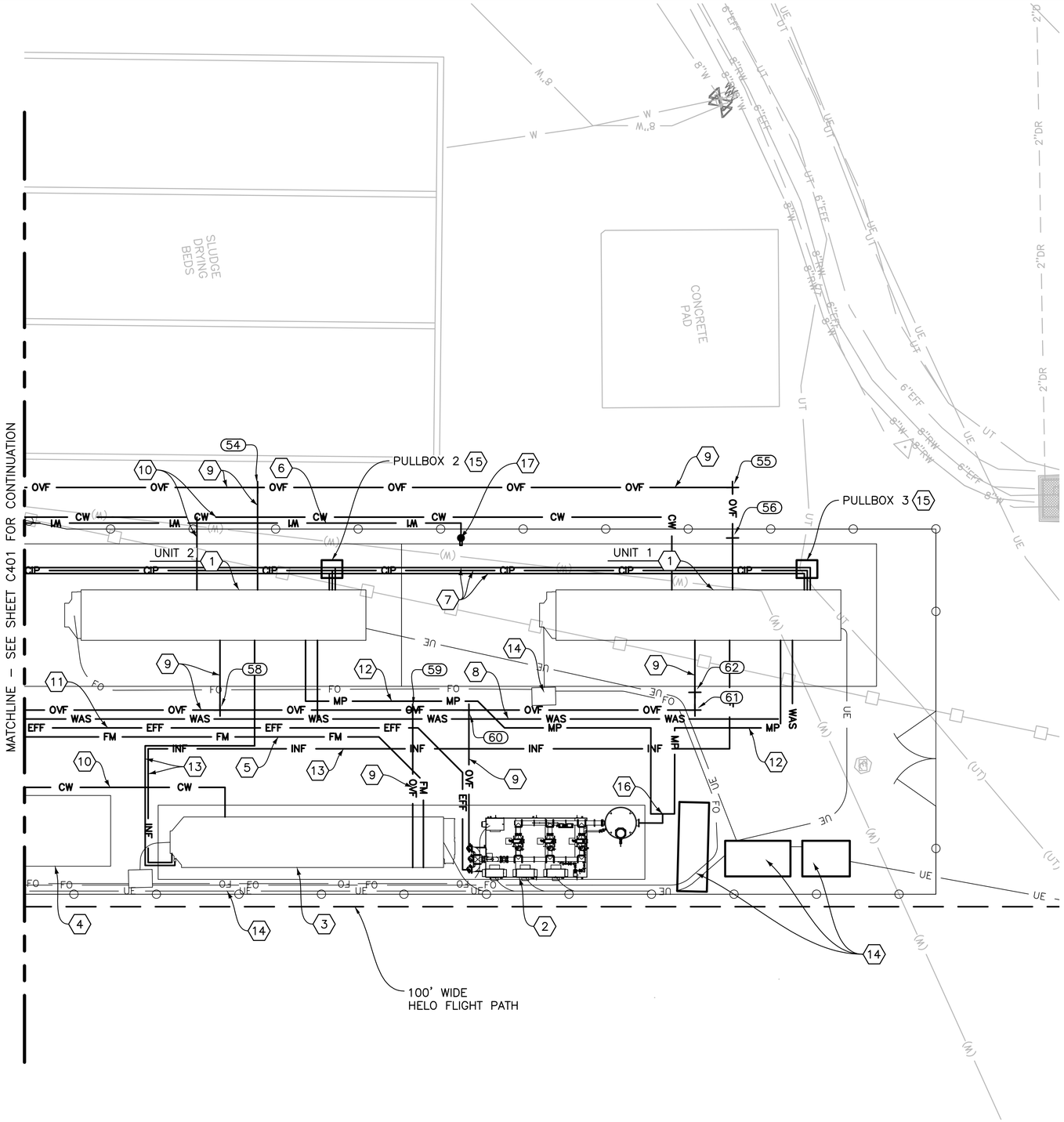

GENERAL NOTES:

A. DRAWINGS REFLECT SURVEY DATA OF FEATURES AND CONDITIONS PRESENT PRIOR TO THE DRAGON BRAVO FIRE IN 2025. CONTRACTOR TO COORDINATE WITH COR REGARDING CHANGES IN EXISTING CONDITIONS PER SPECIFICATION 01 11 00 SUMMARY OF WORK.

B. CONTRACTOR TO FIELD VERIFY DEPTH AND LOCATION OS ALL EXISTING UTILITIES.

C. ALL YARD PIPING AND APPURTENANCES SHALL BE FULLY RESTRAINED.

D. ALL PIPE CONNECTIONS BETWEEN TEMPORARY WWTP PIPING AND YARD PIPING SHALL BE MADE USING DISSIMILAR PIPE TRANSITION COUPLER.

E. YARD HYDRANTS ARE ALL FREEZE PROOF SPECIFIED.

F. CONTRACTOR IS RESPONSIBLE FOR RE–DESIGN OF ALL SITE UTILITIES IF DIFFERENT MANUFACTURER IS SELECTED OTHER THAN THE BASIS OF DESIGN.

G. SEE SHEET C802 FOR OVF PROFILE AND POINT TABLE.

KEY NOTES: (X)

1. MOBILE MBR TREATMENT UNIT.
2. SKID UV DISINFECTION SYSTEM.
3. MOBILE EQ TANK UNIT.
4. 50'X12' WASTEWATER LAB.
5. 4" HDPE FORCEMAIN (FM).
6. 4" HDPE FINISHED WATER (W1).
7. 4" SCH 80 PIPE SLEEVE, QUANTITY OF 3 (CIP).
8. 3" HDPE (WAS).
9. 6" SDR 35 (OVF).
10. 2" HDPE (CW).
11. 4" HDPE (EFF).
12. 6" HDPE (MP).
13. 3" HDPE, QUANTITY OF 2 (INF).
14. ELECTRICAL EQUIPMENT AND CONDUIT. SEE SHEET E103 FOR ELECTRICAL SITE PLAN.
15. SEE DETAIL 02/C506 FOR PULL BOX DETAILS.
16. SEE PROCESS SHEET D305 FOR UNDERGROUND PIPING TO BREAK TANK TRANSITION.
17. 4" WHARF HYDRANT W/ 2–1/2" HOSE CONNECTION. SEE 03/C502 FOR DETAILS.

10 0 10 20
SCALE OF FEET

Registered Professional Engineer (Civil) CERTIFICATE NO. 75262 GREGORY YOUNG Date Signed 6-10-26 ARIZONA, U.S.A.

A/E FIRM	DESIGNED:	SUB SHEET NO.	TITLE OF SHEET	DRAWING NO.
PRIME: HDR ENGINEERING, INC. DENVER, CO 80202	G. YOUNG DRAWN: P. OXBORROW TECH. REVIEW: M. GOUGH DATE: JUNE 2026	C402	SITEWORK TEMPORARY WWTP YARD PIPING ENLARGED PLAN 2 NORTH RIM – GRAND CANYON NATIONAL PARK	113 182752A PMIS/PKG NO. 318719 SHEET 15 OF 90

4/22/2026 Young, Gregory C:\Users\gryoung\DC\ACCDocs\HDR\10350545_NPS_GRCA_N_Rim_Utility_2022\Project Files\CAD_HDR\DRAWINGS\TEMPORARY WASTEWATER\CIVIL\C402.dwg

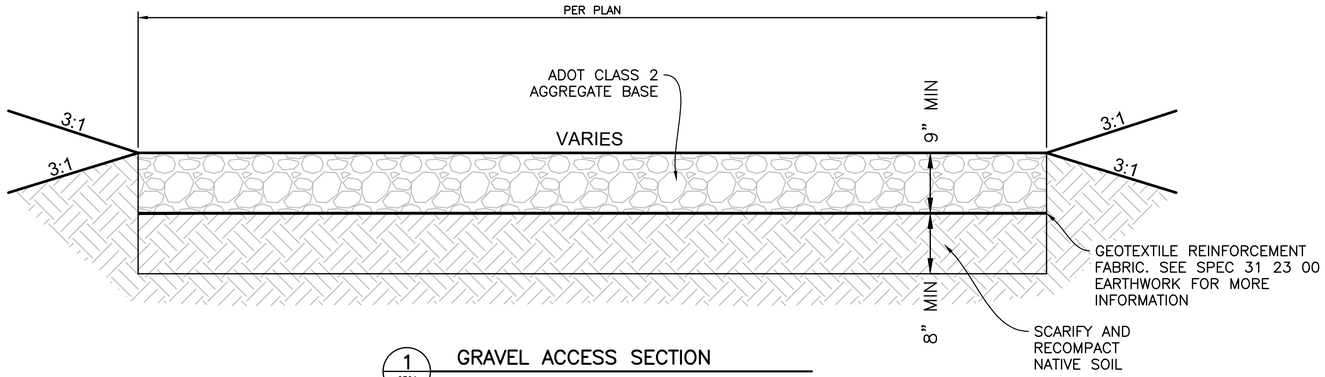

1 C501 GRAVEL ACCESS SECTION

NOT TO SCALE

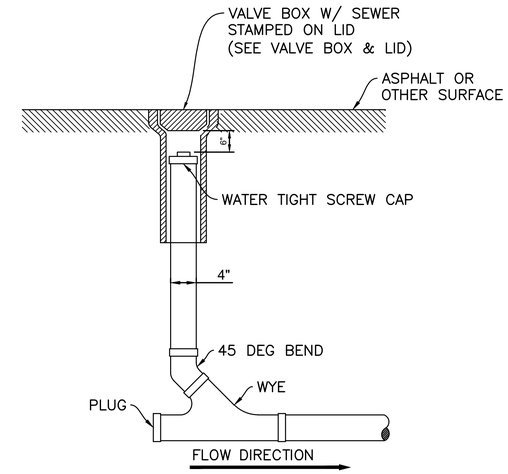

2 C501 SANITARY SEWER CLEANOUT

NOT TO SCALE

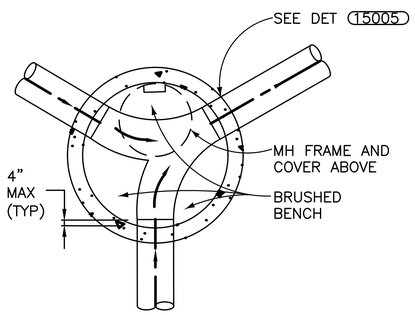

TYPICAL PLAN

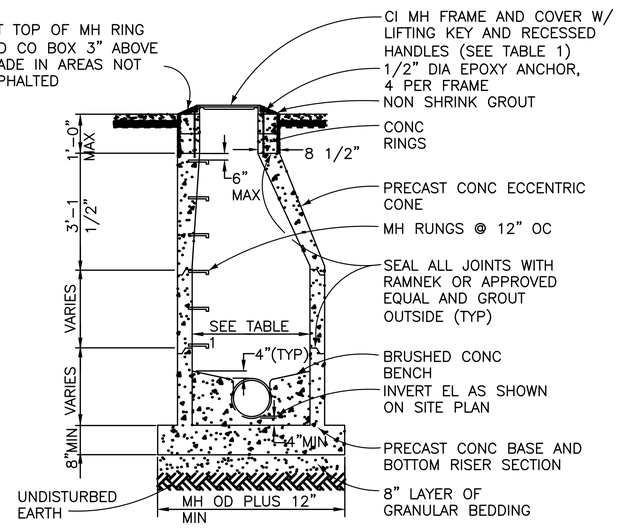

STANDARD MANHOLE

TABLE 1		
PIPE DIA	MH BARREL DIA	MH FRAME AND COVER DIA
12" OR LESS	4' DIA	24" DIA
14" TO 30"	5' DIA	30" DIA

NOTES:
1. ALL COMPONENTS SHALL BE CAPABLE OF HS-20 LOADING.
2. INSTALL ALL PIPES INTO MANHOLES WITH FLEXIBLE PIPE-TO-MANHOLE CONNECTORS.

3 C501 TYPICAL MANHOLE

NOT TO SCALE

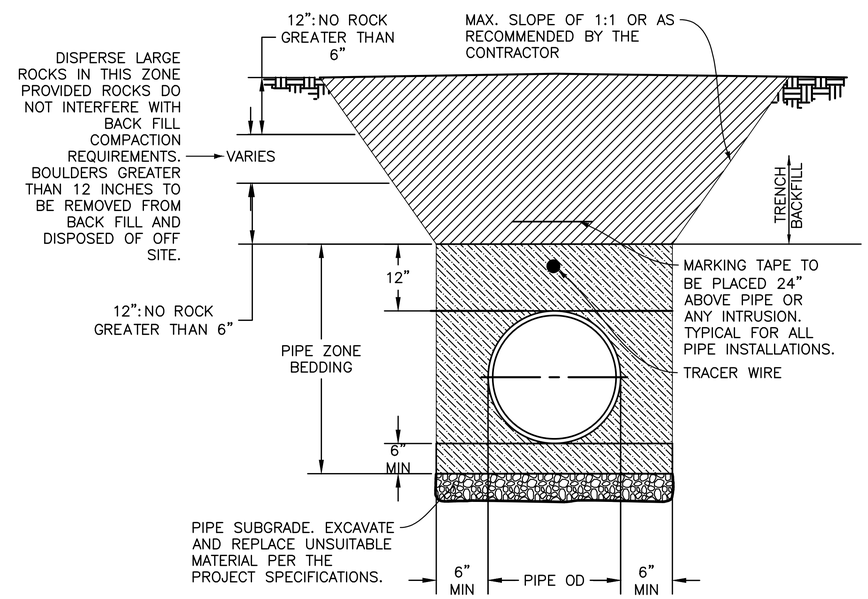

4 C501 TYPICAL TRENCH DETAIL

NOT TO SCALE

Registered Professional Engineer (Civil) CERTIFICATE NO. 75262 GREGORY YOUNG Date Signed 6-10-26 ARIZONA, U.S.A.

A/E FIRM	DESIGNED:	SUB SHEET NO.	TITLE OF SHEET	DRAWING NO.
PRIME: HDR ENGINEERING, INC. DENVER, CO 80202	G. YOUNG	C501	GENERAL CIVIL DETAILS – ACCESS AND UTILITIES	113
	CADD P. OXBORROW			182752A
	TECH. REVIEW: M. GOUGH			PMIS/PKG NO. 318719
	DATE: JUNE 2026		NORTH RIM – GRAND CANYON NATIONAL PARK	SHEET 16 OF 90

5/29/2026 Oxborrow, Paul C:\Users\POXBORRO\DC\ACCDocs\HDR\10350545_NPS_GRCA_N_Rim_Utility_2026\Project Files\CAD_HDR\DRAWINGS\TEMPORARY WASTEWATER\CIVIL\C501.dwg

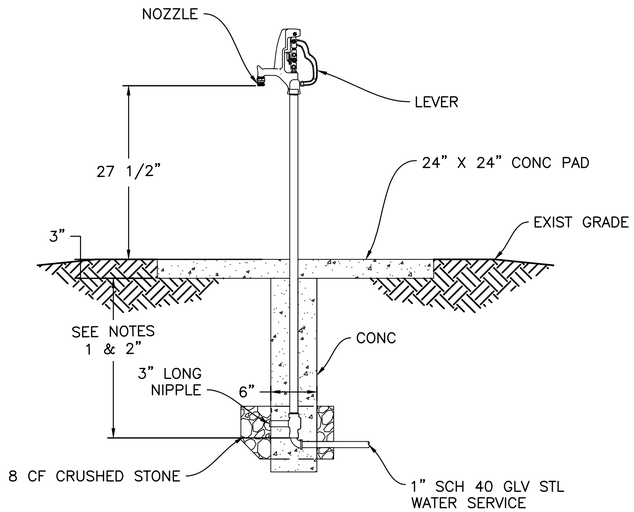

NOTES:
1. BURY DEPTH = 36" MINIMUM
2. INSTALL CORPORATION STOP WITH CAST IRON VALVE BOX WITH LID MARKED "WATER" BETWEEN EXISTING WATERMAIN AND YARD HYDRANT.

1 / C106 FROST RESISTANT YARD HYDRANT
NOT TO SCALE

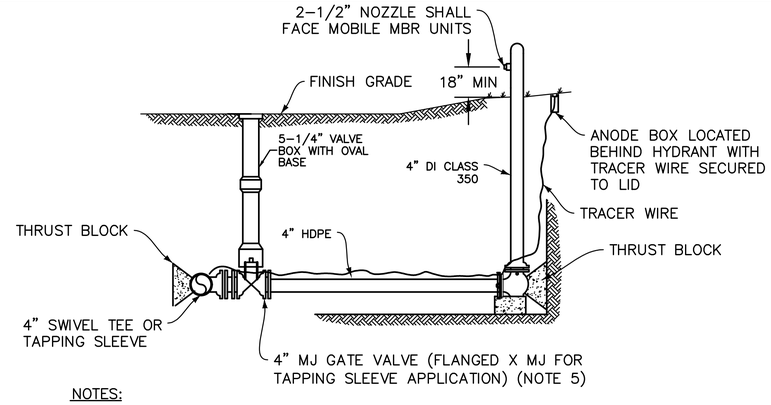

NOTES:
1. ALL FITTINGS, DI PIPE, AND HYDRANT BARREL SHALL BE POLYETHYLENE WRAPPED PER AWWA C-105. PROVIDE PERFORATION AT HYDRANT DRAIN HOLES.
2. PRIOR TO PUTTING THE HYDRANT INTO SERVICE THE FOLLOWING SHALL BE PERFORMED: NOZZLE THREADS SHALL BE GREASED, OIL RESERVOIR SHALL BE FILLED, AND HYDRANTS SHALL BE PAINTED "RUSTOLEUM" HIGH PERFORMANCE ENAMEL (#7564, SAFETY RED).
3. THE ENTIRE PIPING ASSEMBLY (HYDRANT SHOE TO CONNECTION AT MAIN) SHALL BE RESTRAINED.
4. THE VALVE NUT SHALL HAVE A MAXIMUM BURIED DEPTH OF 36' FROM FINISHED GRADE.
5. WHERE FIRE HYDRANTS ARE SUBJECT TO IMPACT BY A MOTOR VEHICLE, BOLLARD POSTS OR OTHER APPROVED MEANS SHALL BE PROVIDED.

3 / C106 FROST RESISTANT WHARF HYDRANT
NOT TO SCALE

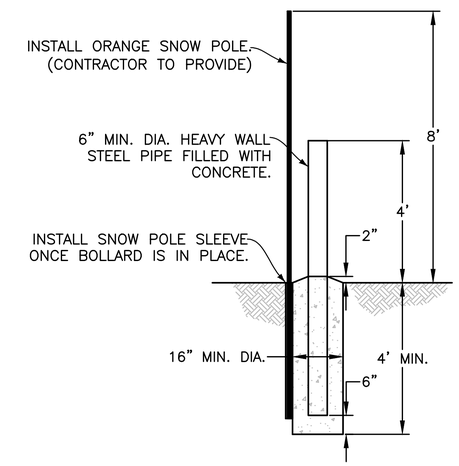

5 / C106 TYPICAL BOLLARD DETAIL
NOT TO SCALE

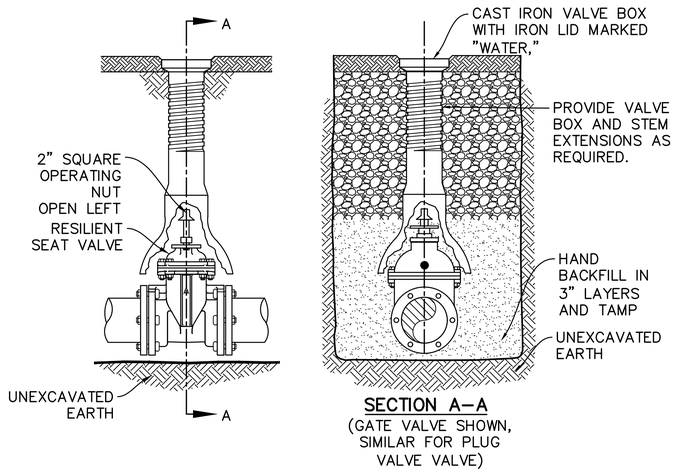

SECTION A-A
(GATE VALVE SHOWN, SIMILAR FOR PLUG VALVE VALVE)

2 / C106 VALVE ASSEMBLY DETAIL
NOT TO SCALE

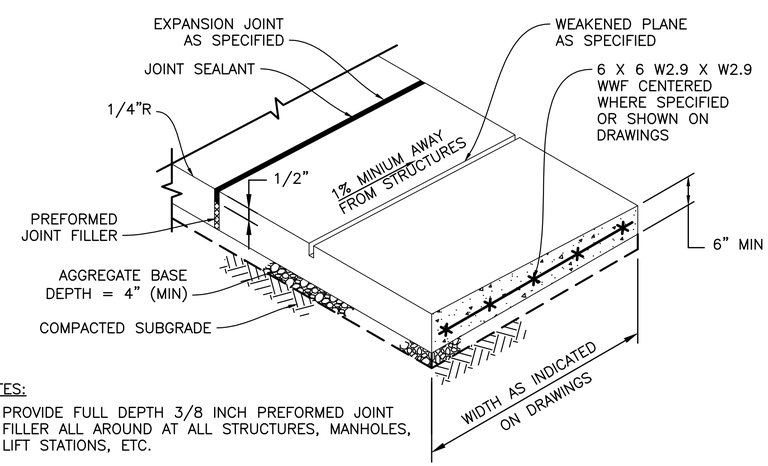

NOTES:
1. PROVIDE FULL DEPTH 3/8 INCH PREFORMED JOINT FILLER ALL AROUND AT ALL STRUCTURES, MANHOLES, LIFT STATIONS, ETC.
2. PLACE PREFORMED JOINT FILLER FULL DEPTH THRU JOINTS AT POINT OF TANGENCY AND AT MINIMUM 25 FOOT INTERVALS.
3. THICKNESS OF CONCRETE EQUAL TO 6".

4 / C103 TYPICAL CONCRETE SIDEWALK PAVEMENT
NOT TO SCALE

Registered Professional Engineer (Civil) CERTIFICATE NO. 75262 GREGORY YOUNG Date Signed 6-10-26 ARIZONA, U.S.A.

A/E FIRM	DESIGNED:	SUB SHEET NO.	TITLE OF SHEET	DRAWING NO.
PRIME: HDR ENGINEERING, INC. DENVER, CO 80202	G. YOUNG CADD P. OXBORROW TECH. REVIEW: M. GOUGH DATE: JUNE 2026	C502	GENERAL CIVIL DETAILS – ACCESS AND UTILITIES NORTH RIM – GRAND CANYON NATIONAL PARK	113 182752A PMIS/PKG NO. 318719 SHEET 17 OF 90

5/29/2026 Oxborrow, Paul C:\Users\POXBORRO\DC\ACCDocs\HDR\10350545_NPS_GRCA_N_Rim_Utility_2026\Project Files\CAD_HDR\DRAWINGS\TEMPORARY WASTEWATER\CIVIL\C502.dwg

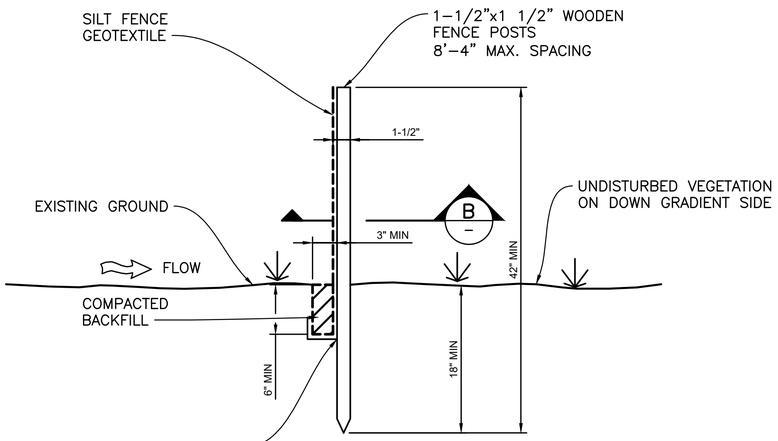

— SF — SF

1 / C503 **SILT FENCE DETAIL**

NOT TO SCALE

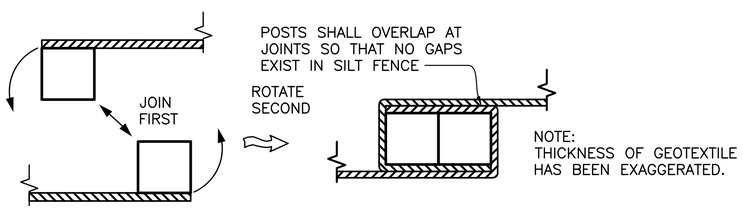

POST SHALL BE JOINED AS SHOWN, THEN ROTATED 180° IN DIRECTION SHOWN AND DRIVEN INTO THE GROUND

B **JOINTS – SECTION**

NOT TO SCALE

SILT FENCE INSTALLATION NOTES:

1. SEE PLAN VIEW FOR:
   – LOCATION AND LENGTH OF FENCE.
2. ANCHOR TRENCH SHALL BE EXCAVATED WITH TRENCHER, OR WITH SILT FENCE INSTALLATION MACHINE; NO ROAD GRADERS, BACKHOES, ETC. SHALL BE USED. TRENCH SHALL BE COMPACTED BY HAND; WITH "JUMPING JACK", OR BY WHEEL ROLLING. COMPACTION SHALL BE SUCH THAT SILT FENCE RESISTS BEING PULLED OUT OF ANCHOR TRENCH BY HAND.
3. SILT FENCE GEOTEXTILE SHALL MEET THE FOLLOWING REQUIREMENTS:
   – 6 TO 12 GALLONS PER MINUTE PER SQUARE FOOT FLOW CAPACITY.
   – 90 LB. TENSILE STRENGTH PER ASTM D1622.
   – UV DESIGN AT 500 HRS. MIN. 70% STRENGTH RETAINED PER ASTM D4355.
4. SILT FENCE SHALL BE INSTALLED PRIOR TO ANY LAND–DISTURBING ACTIVITIES.

SILT FENCE MAINTENANCE NOTES:

1. THE GESC MANAGER SHALL INSPECT SILT FENCE DAILY DURING AND AFTER AND STORM EVENT AND MAKE REPAIRS OR CLEAN OUT UPSTREAM SEDIMENT AS NECESSARY.
2. SEDIMENT ACCUMULATED UP STREAM OF SILT FENCE SHALL BE REMOVED WHEN THE UPSTREAM SEDIMENT REACHES A DEPTH OF 6 INCHES.
3. SILT FENCE SHALL BE REMOVED WHEN THE UPSTREAM DISTURBED AREA IS STABILIZED AND GRASS COVER IS APPROVED BY THE TOWN. IF ANY DISTURBED AREA EXISTS AFTER REMOVAL, IT SHALL BE SEEDED AND MULCHED OR OTHERWISE STABILIZED IN A MANNER APPROVED BY THE OWNER.

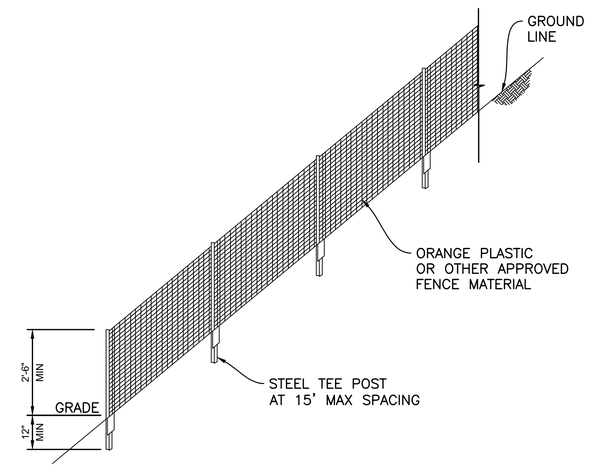

CONSTRUCTION FENCE DETAIL

NOT TO SCALE

CONSTRUCTION FENCE INSTALLATION NOTES

1. SEE PLAN VIEW FOR:
   – LOCATION AND LENGTH OF FENCE.
2. CONSTRUCTION FENCE INDICATED ON INITIAL GESC PLAN SHALL BE INSTALLED PRIOR TO OTHER BMPS AND ANY LAND–DISTURBING ACTIVITIES.
3. STEEL TEE POSTS SHALL BE UTILIZED FOR SUPPORT OF CONSTRUCTION FENCE. MAXIMUM SPACING FOR TEE POSTS SHALL BE 15'.

CONSTRUCTION FENCE MAINTENANCE NOTES

1. ANY DAMAGED FENCE SHALL BE REPAIRED ON A DAILY BASIS.
2. FENCE SHALL BE REMOVED AT THE END OF CONSTRUCTION. IF ANY DISTURBED AREA EXISTS AFTER FENCE REMOVAL, IT SHALL BE DRILL SEEDED AND CRIMP MULCHED OR OTHERWISE STABILIZED IN A MANNER APPROVED BY THE GOVERNING AGENCY.

—— –CF– CF —— CF

Registered Professional Engineer (Civil) CERTIFICATE NO. 75262 GREGORY YOUNG Date Signed 6-10-26 ARIZONA, U.S.A.

A/E FIRM	DESIGNED:	SUB SHEET NO.	TITLE OF SHEET	DRAWING NO.
PRIME: HDR ENGINEERING, INC. DENVER, CO 80202	G. YOUNG CADD P. OXBORROW TECH. REVIEW: M. COUGH DATE: JUNE 2026	C503	GENERAL CIVIL DETAILS – GESC CONTINUED	113 182752A PMIS/PKG NO. 318719 SHEET 18 OF 90

NORTH RIM – GRAND CANYON NATIONAL PARK

5/29/2026 Oxborrow, Paul C:\Users\POXBORRO\DC\ACCDocs\HDR\10350545_NPS_GRCA_N_Rim_Utility_2026\Project Files\CAD_HDR\DRAWINGS\TEMPORARY WASTEWATER\CIVIL\C503.dwg

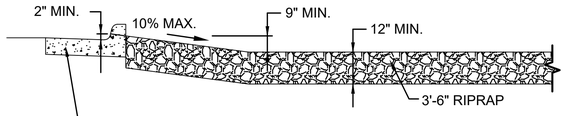

NO MATERIAL INCLUDING WOOD, PIPES, GRAVEL, OR ASPHALT, SHALL BE PLACED IN GUTTER TO FACILITATE MOUNTING CURB; HOWEVER, CURB MAY BE CUT DOWN TO A HEIGHT OF 2" OR HIGHER FOR EASIER ACCESS AND REPLACED AT PROJECT COMPLETION WITH A PUBLIC WORKS PERMIT.

A / –

SECTION

SCALE: 1/2" = 1'–0"

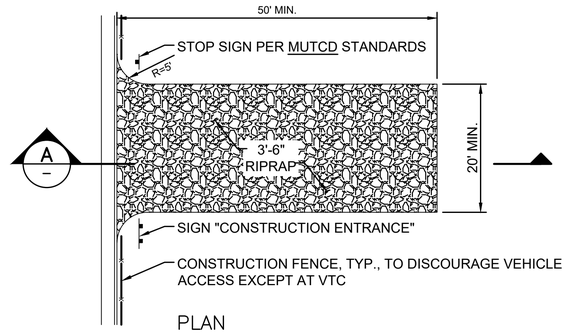

PLAN

SCALE: 1" = 10'–0"

VTC

1 / C504 VEHICLE TRACKING CONTROL

NOT TO SCALE

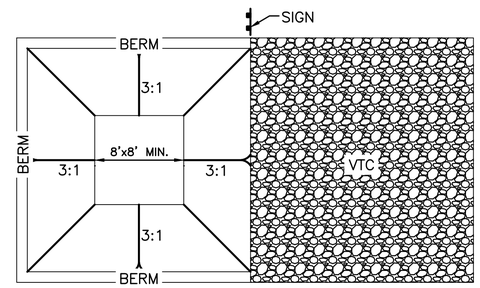

DETAIL

NO SCALE

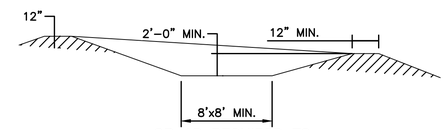

OR AS REQUIRED TO CONTAIN WASTE CONCRETE

3 SECTION

NO SCALE

CWA

2 / C504 CONCRETE WASH OUT DETAIL

NOT TO SCALE

CONCRETE WASHOUT AREA INSTALLATION NOTES

1. SEE PLAN VIEW FOR–

   – LOCATIONS OF CONCRETE WASHOUT AREA

2. THE CONCRETE WASHOUT AREA SHALL BE INSTALLED PRIOR TO ANY CONCRETE PLACEMENT ON SITE.
3. VEHICLE TRACKING CONTROL IS REQUIRED AT THE ACCESS POINT.
4. SIGNS SHALL BE PLACED AT CONSTRUCTION ENTRANCE, AT THE WASHOUT AREA, AND ELSEWHERE AS NECESSARY TO CLEARLY INDICATE THE LOCATION OF THE CONCRETE WASHOUT AREA TO OPERATORS OF CONCRETE TRUCKS AND PUMP RIGS.
5. EXCAVATED MATERIAL SHALL BE UTILIZED IN PERIMETER BERM CONSTRUCTION.

CONCRETE WASHOUT AREA MAINTENANCE NOTES

1. THE CONCRETE WASHOUT AREA SHALL BE REPAIRED AND ENLARGED OR CLEANED OUT AS NECESSARY TO MAINTAIN CAPACITY FOR WASTED CONCRETE.
2. AT THE END OF CONSTRUCTION, ALL CONCRETE SHALL BE REMOVED FROM SITE AND DISPOSED OF AT AN APPROVED WASTE SITE.
3. WHEN THE CONCRETE WASHOUT AREA IS REMOVED, THE DISTURBED AREA SHALL BE DRILL SEEDED AND CRIMP MULCHED OR OTHERWISE STABILIZED IN A MANNER APPROVED BY THE GOVERNING AGENCY.
4. INSPECT WEEKLY, DURING AND AFTER ANY STORM EVENT.

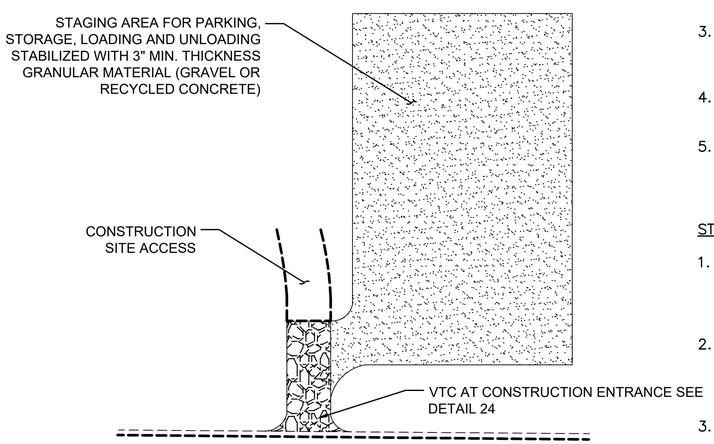

PLAN

SCALE: 1" = 40'-0"

STABILIZED STAGING AREA INSTALLATION NOTES

1. SEE PLAN VIEW FOR GENERAL LOCATION OF STAGING AREA. CONTRACTOR MAY MODIFY LOCATION AND SIZE OF STABILIZED STAGING AREA WITH TOWN APPROVAL.
2. STABILIZED STAGING AREA SHALL BE LARGE ENOUGH TO FULLY CONTAIN PARKING, STORAGE, AND UNLOADING AND LOADING OPERATIONS.
3. IF REQUIRED BY THE TOWN, SITE ACCESS ROADS SHALL BE STABILIZED IN THE SAME MANNER AS THE STAGING AREA.
4. STAGING AREA SHALL BE STABILIZED PRIOR TO ANY OTHER OPERATIONS ON THE SITE.
5. THE STABILIZED STAGING AREA SHALL CONSIST OF A MINIMUM OF 3" OF GRANULAR MATERIAL (GRAVEL OR RECYCLED CONCRETE).

STABILIZED STAGING AREA MAINTENANCE NOTES

1. THE GESC MANAGER SHALL INSPECT THE STABILIZED STAGING AREA WEEKLY, DURING AND AFTER ANY STORM EVENT AND MAKE REPAIRS OR CLEAN OUT UPSTREAM SEDIMENT AS NECESSARY.
2. GESC MANAGER SHALL PROVIDE ADDITIONAL THICKNESS OF GRANULAR MATERIAL IF ANY RUTTING OCCURS OR UNDERLYING SUBGRADE BECOMES EXPOSED.
3. STABILIZED STAGING AREA SHALL BE ENLARGED IF NECESSARY TO CONTAIN PARKING, STORAGE, AND UNLOADING AND LOADING OPERATIONS.
4. ANY ACCUMULATED DIRT OR MUD SHALL BE REMOVED FROM THE SURFACE OF THE STABILIZED STAGING AREA.
5. THE STABILIZED STAGING AREA SHALL BE REMOVED AT THE END OF CONSTRUCTION. THE GRANULAR MATERIAL SHALL BE REMOVED OR, IF APPROVED BY THE TOWN, USED ON SITE, AND THE AREA TOPSOILED, DRILL SEEDED AND CRIMP MULCHED OR OTHERWISE STABILIZED.

SSA

3 / C504 STABILIZED STAGING AREA

NOT TO SCALE

Registered Professional Engineer (Civil) CERTIFICATE NO. 75262 GREGORY YOUNG Date Signed 6-10-26 ARIZONA, U.S.A.

A/E FIRM PRIME: HDR ENGINEERING, INC. DENVER, CO 80202	DESIGNED: G. YOUNG CADD P. OXBORROW TECH. REVIEW: M. GOUGH DATE: JUNE 2026	SUB SHEET NO. C504	TITLE OF SHEET GENERAL CIVIL DETAILS – GESC CONTINUED NORTH RIM – GRAND CANYON NATIONAL PARK	DRAWING NO. 113 182752A PMIS/PKG NO. 318719 SHEET 19 OF 90

5/29/2026 Oxborrow, Paul C:\Users\POXBORRO\DC\ACCDocs\HDR\10350545_NPS_GRCA_N_Rim_Utility_2026\Project Files\CAD_HDR\DRAWINGS\TEMPORARY WASTEWATER\CIVIL\C504.dwg

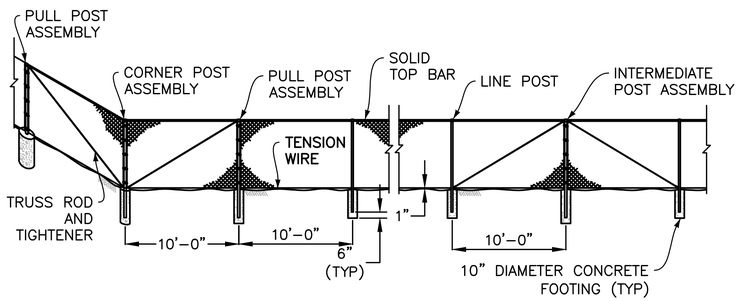

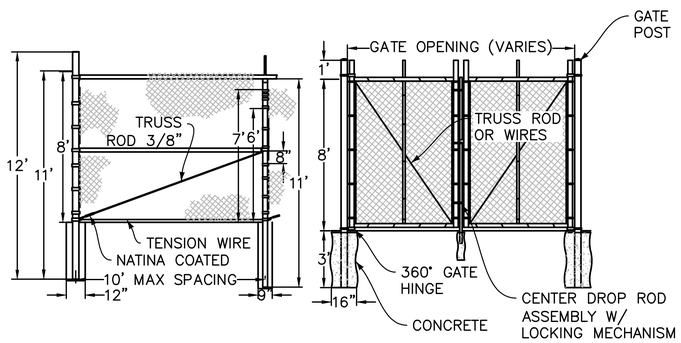

1 C505 CHAINLINK FENCE AND SWING GATE DETAIL

NOT TO SCALE

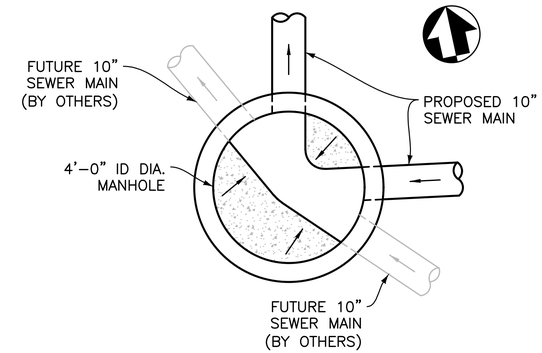

2 C505 MANHOLE A-99 CONCRETE BASE DETAIL

NOT TO SCALE

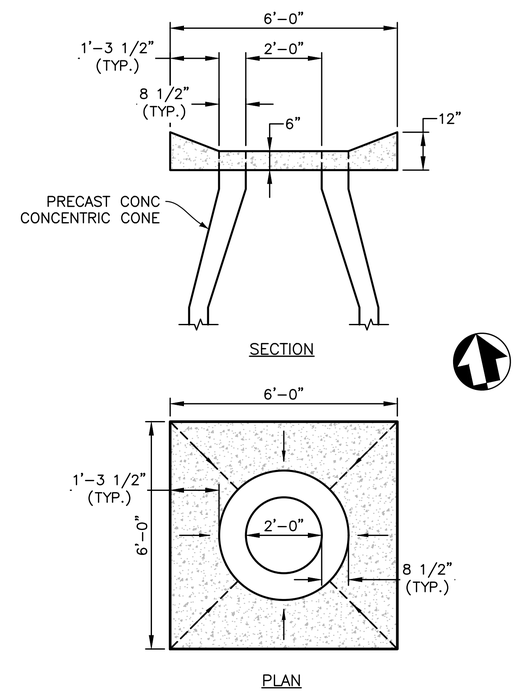

3 C505 MANHOLE A-99 CONCRETE APRON DETAIL

NOT TO SCALE

Registered Professional Engineer (Civil) CERTIFICATE NO. 75262 GREGORY YOUNG Date Signed 6-10-26 ARIZONA, U.S.A.

A/E FIRM	DESIGNED:	SUB SHEET NO.	TITLE OF SHEET	DRAWING NO.
PRIME: HDR ENGINEERING, INC. DENVER, CO 80202	G. YOUNG CADD P. OXBORROW TECH. REVIEW: M. GOUGH DATE: JUNE 2026	C505	GENERAL CIVIL DETAILS – GENERAL NORTH RIM – GRAND CANYON NATIONAL PARK	113 182752A PMIS/PKG NO. 318719 SHEET 20 OF 90

6/1/2026 Oxborrow, Paul C:\Users\POXBORRO\DC\ACCDocs\HDR\10350545_NPS_GRCA_N_Rim_Utility_2026\Project Files\CAD_HDR\DRAWINGS\TEMPORARY WASTEWATER\CIVIL\C505.dwg

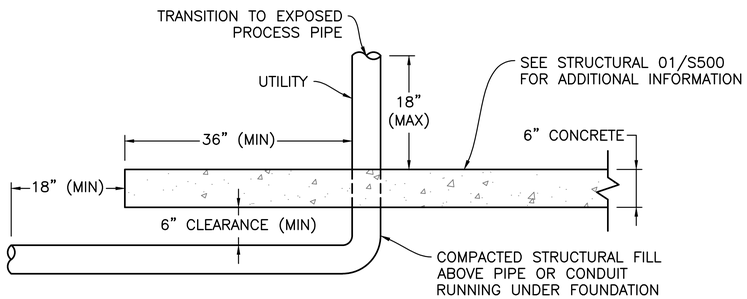

1 / C106 UNDERSLAB PIPE PENETRATION

SCALE: NTS

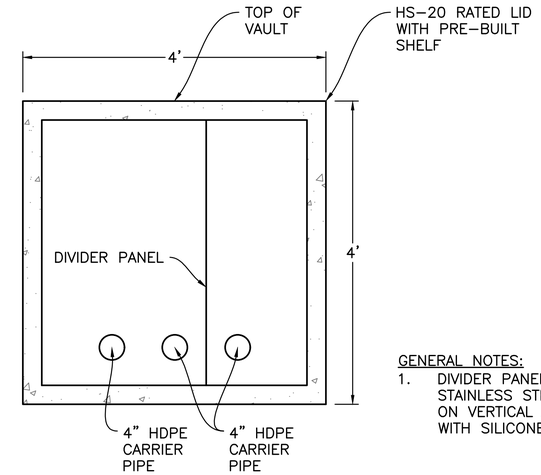

GENERAL NOTES:

1. DIVIDER PANEL SHALL BE 1/4" (MIN) STAINLESS STEEL OR HDPE SEALED ON VERTICAL AND BOTTOM SIDES WITH SILICONE CAULK.

A / C506 CHEMICAL FEED PULL BOX 1 ELEVATION

SCALE: NTS

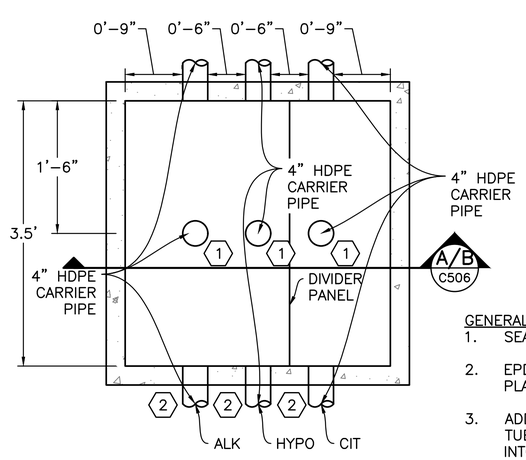

GENERAL NOTES:

1. SEAL ALL STEEL PLATE JOINTS.
2. EPDM GASKET ON BOTTOM OF STEEL PLATE.
3. ADD ONE LOOSE LOOP FOR EACH TUBING BEFORE CONTINUING FEEDING INTO CORRESPONDING CARRIER PIPE.

2 / C106 PULL BOX FOR CHEMICAL PIPING – PLAN

SCALE: NTS

KEY NOTES: (X)

1. PULL BOXES 2 AND 3 ONLY.
2. PULL BOXES 1 AND 2 ONLY.

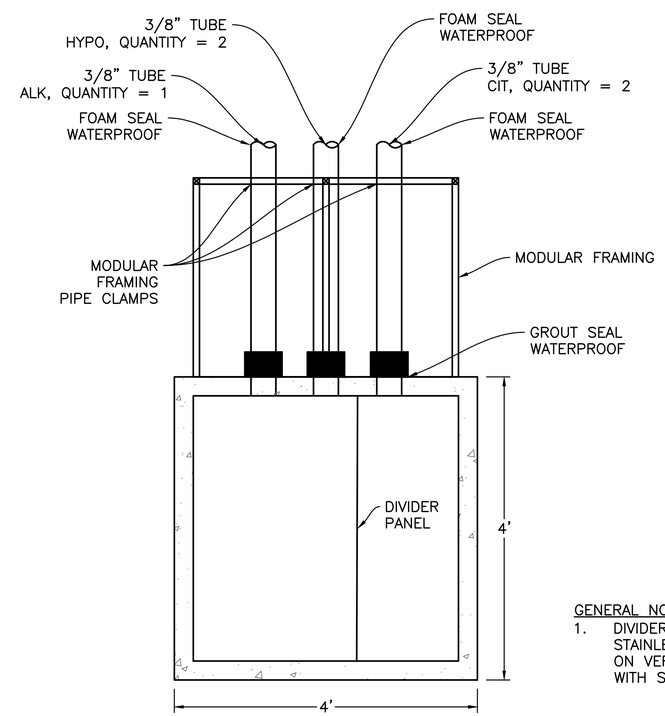

GENERAL NOTES:

1. DIVIDER PANEL SHALL BE 1/4" (MIN) STAINLESS STEEL OR HDPE SEALED ON VERTICAL AND BOTTOM SIDES WITH SILICONE CAULK.

B / C506 CHEMICAL FEED PULL BOX 2 & 3 ELEVATION

SCALE: NTS

Registered Professional Engineer (Civil) CERTIFICATE NO. 75262 GREGORY YOUNG Date Signed 6-18-26 ARIZONA, U.S.A.

A/E FIRM PRIME: HDR ENGINEERING, INC. DENVER, CO 80202	DESIGNED: G. YOUNG CADD R. KELLEY TECH. REVIEW: M. GOUGH DATE: JUNE 2026	SUB SHEET NO. C506	TITLE OF SHEET GENERAL CIVIL DETAILS NORTH RIM – GRAND CANYON NATIONAL PARK	DRAWING NO. 113 182752A PMIS/PKG NO. 318719 SHEET 21 OF 90

5/29/2026 Oxborrow, Paul C:\Users\POXBORRO\DC\ACCDocs\HDR\10350545_NPS_GRCA_N_Rim_Utility_2026\Project Files\CAD_HDR\DRAWINGS\TEMPORARY WASTEWATER\CIVIL\C506.dwg

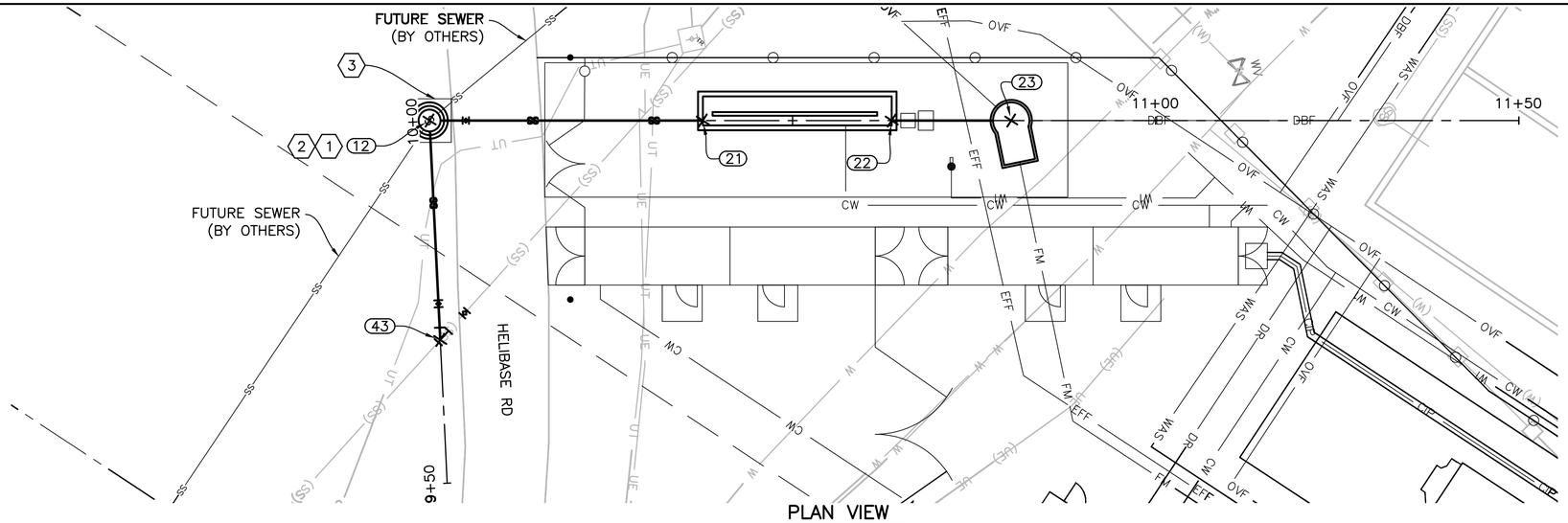

PLAN VIEW

SCALE 1"=10'

STA 9+70 TO STA 10+77
BURIED 84 LF 10" SDR 35 PVC
GRAV (SS) LINE
1 / 002C501

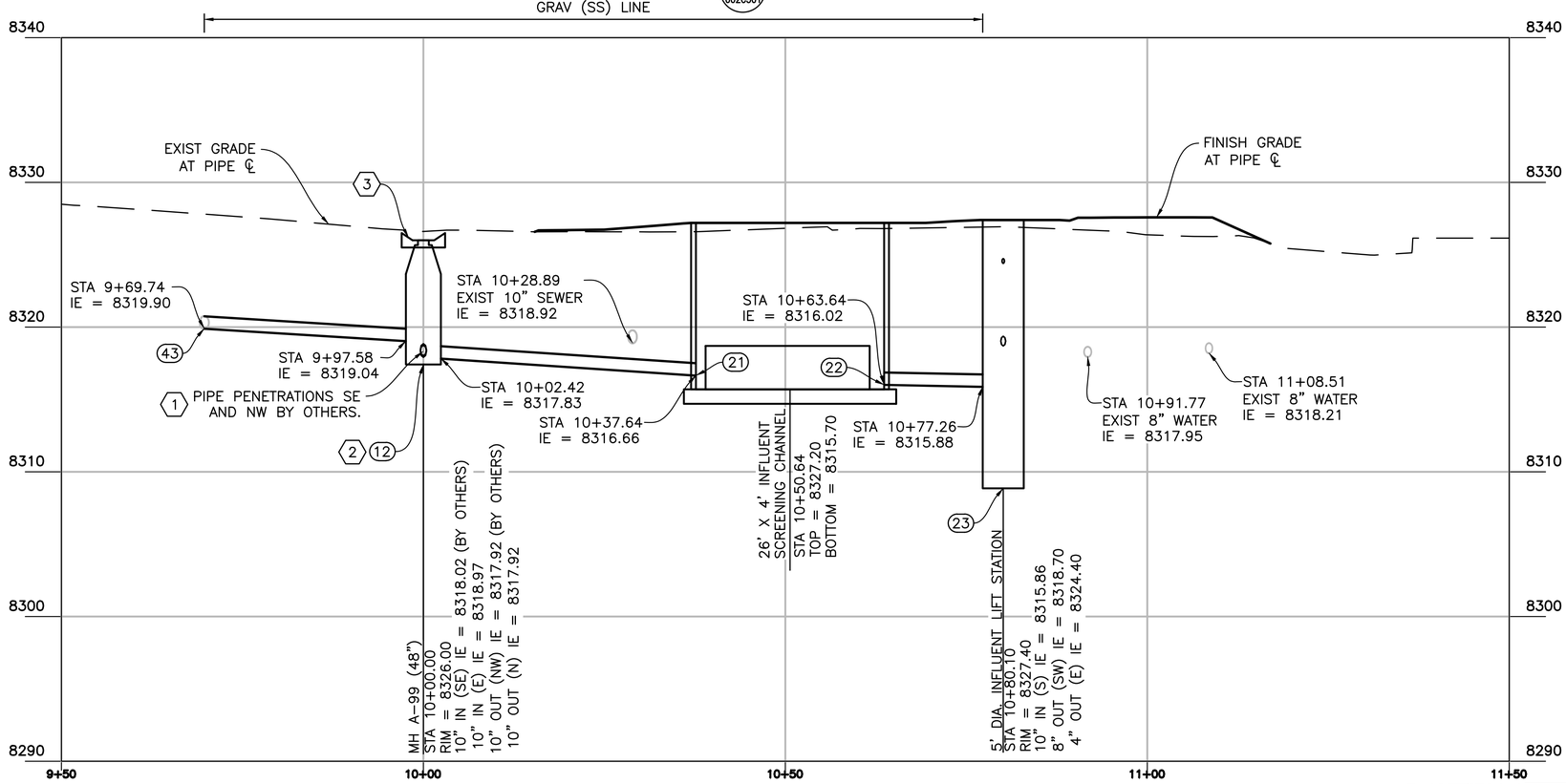

PROFILE VIEW

SCALE

GENERAL NOTE:

A. CONTRACTOR TO FIELD VERIFY DEPTHS AND LOCATIONS OF ALL EXISTING UTILITIES.

B. ABBREVIATION PH ON ALL THE UTILITY PLAN AND PROFILES STANDS FOR POTHOLE INFORMATION THAT WAS PROVIDED SAFE SITE UTILITY SERVICES, LLC, 8-16-2021.

C. ALL MECHANICAL JOINTS AND FITTINGS SHALL BE DUCTILE IRON AND ALL JOINTS SHOULD BE RESTRAINED.

D. SURVEY CONTROL AND CONTROL POINT TABLE LOCATED IN VOLUME 0, 002-C102.

E. LENGTHS OF PIPE SHOWN IN PROFILE REFLECT CALCULATED SLOPE LENGTHS. CONTRACTOR RESPONSIBLE FOR VERIFYING LENGTHS PRIOR TO MATERIAL PROCUREMENT.

KEYNOTES (X)

1. PIPE PENETRATIONS FOR FUTURE SANITARY SEWER SHALL NOT BE PROVIDE AS PART OF THIS PROJECT.
2. SEE DETAIL 02/C505 FOR MANHOLE A-99 CONCRETE BASE.
3. SEE DETAIL 03/C505 FOR MANHOLE A-99 CONCRETE APRON.

POINT TABLE

POINT NO.	NORTHING	EASTING	DESCRIPTION
12	13151336.85	1326255.49	SSMH
21	13151373.65	1326263.42	CONNECT TO SCREENING CHANNEL
22	13151399.07	1326268.89	CONNECT TO SCREENING CHANNEL
23	13151415.15	1326272.36	INFLUENT LIFT STATION
43	13151331.93	1326285.35	10"X10" WYE

10 0 10 20 HORIZ.
5 0 5 10 VERT.
SCALE OF FEET

Registered Professional Engineer (Civil) CERTIFICATE NO. 75262 GREGORY YOUNG Date Signed 6-10-26 ARIZONA, U.S.A.

A/E FIRM	DESIGNED:	SUB SHEET NO.	TITLE OF SHEET	DRAWING NO.
PRIME: HDR ENGINEERING, INC. DENVER, CO 80202	G. YOUNG P. OXBORROW TECH. REVIEW: M. GOUGH DATE: JUNE 2026	C801	GENERAL TEMPORARY WWTP YARD PIPING PLAN AND PROFILE 10" SS NORTH RIM – GRAND CANYON NATIONAL PARK	113 182752A PMIS/PKG NO. 318719 SHEET 22 OF 90

6/1/2026 Oxborrow, Paul C:\Users\POXBORRO\DC\ACCDocs\HDR\10350545_NPS_GRCA_N_Rim_Utility_2026\Project Files\CAD_HDR\DRAWINGS\TEMPORARY WASTEWATER\CIVIL\C801.dwg

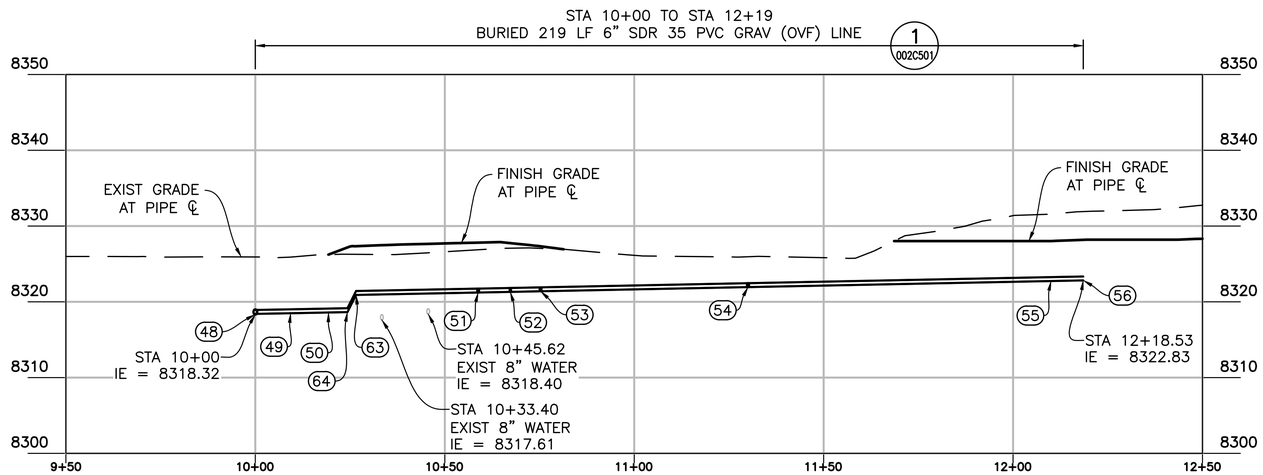

PROFILE VIEW

SCALE

POINT TABLE			
POINT NO.	NORTHING	EASTING	DESCRIPTION
23	13151415.15	1326272.36	INFLUENT LIFT STATION
46	13151401.51	1326235.46	10"X8" WYE
47	13151399.12	1326250.03	45° HORIZONTAL BEND
48	13151403.28	1326255.82	8"X6" WYE
49	13151412.40	1326257.73	11.25° HORIZONTAL BEND
50	13151421.60	1326261.64	22.5° HORIZONTAL BEND
51	13151449.27	1326289.84	6"X6"X6" TEE
52	13151455.19	1326295.88	6"X6"X4" TEE
53	13151460.80	1326301.59	6"X6"X6" TEE
54	13151499.14	1326340.68	6"X6"X6" TEE
55	13151555.16	1326397.78	90° HORIZONTAL BEND
56	13151549.09	1326403.74	6" OVF END
57	13151434.03	1326327.85	90° HORIZONTAL BEND
58	13151467.93	1326362.42	6"X6"X6" TEE
59	13151490.66	1326385.59	6"X6"X6" TEE
60	13151497.30	1326392.35	6"X6"X6" TEE
61	13151523.96	1326419.52	90° HORIZONTAL BEND
62	13151526.10	1326417.42	6" OVF END
63	13151426.69	1326266.83	45° VERTICAL BEND
64	13151425.11	1326265.21	45° VERTICAL BEND

GENERAL NOTE:

A. CONTRACTOR TO FIELD VERIFY DEPTHS AND LOCATIONS OF ALL EXISTING UTILITIES.

B. ABBREVIATION PH ON ALL THE UTILITY PLAN AND PROFILES STANDS FOR POTHOLE INFORMATION THAT WAS PROVIDED SAFE SITE UTILITY SERVICES, LLC, 8–16–2021.

C. ALL MECHANICAL JOINTS AND FITTINGS SHALL BE DUCTILE IRON AND ALL JOINTS SHOULD BE RESTRAINED.

D. SURVEY CONTROL AND CONTROL POINT TABLE LOCATED IN VOLUME 0, 002–C102.

E. LENGTHS OF PIPE SHOWN IN PROFILE REFLECT CALCULATED SLOPE LENGTHS. CONTRACTOR RESPONSIBLE FOR VERIFYING LENGTHS PRIOR TO MATERIAL PROCUREMENT.

F. SEE SHEETS C401 AND C402 FOR YARD PIPING PLAN.

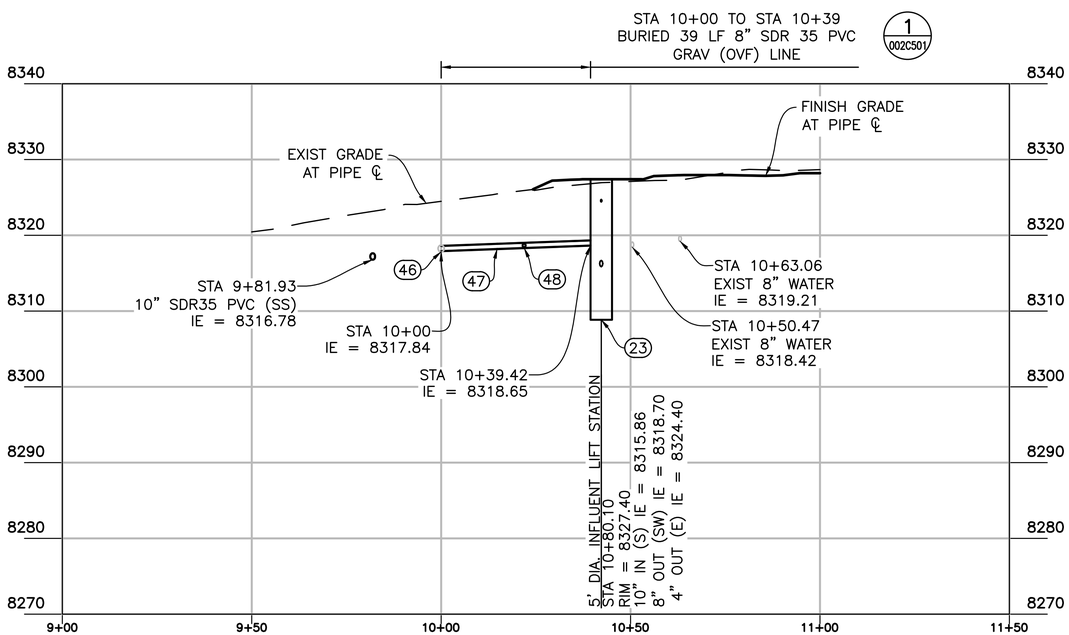

PROFILE VIEW

SCALE

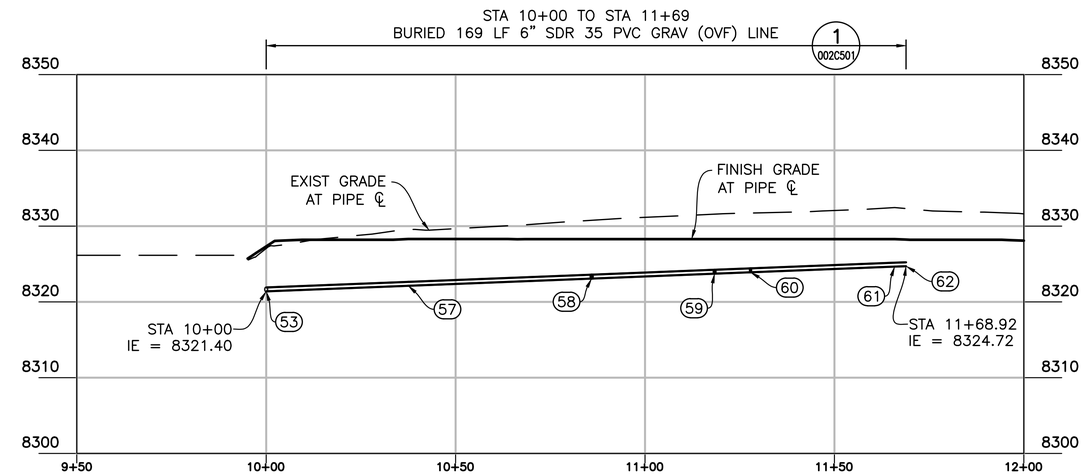

PROFILE VIEW

SCALE

20 0 20 40 HORIZ.
10 0 10 20 VERT.
SCALE OF FEET

Registered Professional Engineer (Civil) CERTIFICATE NO. 75262 GREGORY YOUNG Date Signed 6-10-26 ARIZONA, U.S.A.

A/E FIRM	DESIGNED:	SUB SHEET NO.	TITLE OF SHEET	DRAWING NO.
PRIME: HDR ENGINEERING, INC. DENVER, CO 80202	G. YOUNG DRAWN: P. OXBORROW TECH. REVIEW: M. GOUGH DATE: JUNE 2026	C802	GENERAL TEMPORARY WWTP YARD PIPING PROFILES NORTH RIM – GRAND CANYON NATIONAL PARK	113 182752A PMIS/PKG NO. 318719 SHEET 23 OF 90

6/1/2026 Oxborrow, Paul C:\Users\POXBORRO\DC\ACCDocs\HDR\10350545_NPS_GRCA_N_Rim_Utility_2026\Project Files\CAD_HDR\DRAWINGS\TEMPORARY WASTEWATER\CIVIL\C802.dwg