PROJECT	SHEET NUMBER
WY NP YELL 15(2)	A.1

U. S. DEPARTMENT OF THE INTERIOR
NATIONAL PARK SERVICE
YELLOWSTONE NATIONAL PARK

PLANS FOR PROPOSED PROJECT

WY NP YELL 15(2)
NPS PMIS NO. 336247

MADISON RIVER BRIDGE

TETON COUNTY
WYOMING

LENGTH 0.36 MILES

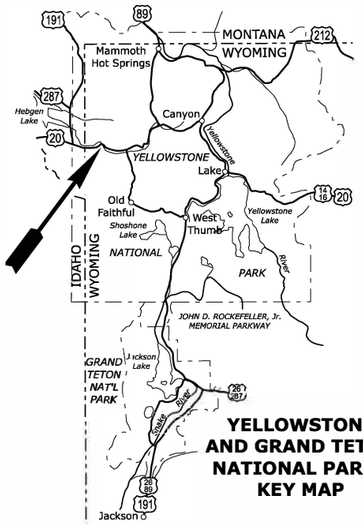

YELLOWSTONE AND GRAND TETON NATIONAL PARKS KEY MAP

WORLD HERITAGE SITE

TYPE OF CONSTRUCTION:

Bridge replacement, paving, grading.

DESIGN DESIGNATION:

SADT (2026)	*8474 veh/day*
SADT (2046)	*10339 veh/day*
V	*45 MPH*
e (max)	*6.0%*

SPECIFICATION:

Standard Specifications for Construction of Roads and Bridges on Federal Highway Projects, FP-24

PLANS PREPARED BY
U.S. DEPARTMENT OF TRANSPORTATION
FEDERAL HIGHWAY ADMINISTRATION
WESTERN FEDERAL LANDS HIGHWAY DIVISION
VANCOUVER, WASHINGTON

PROJECT MANAGER
N. JONES

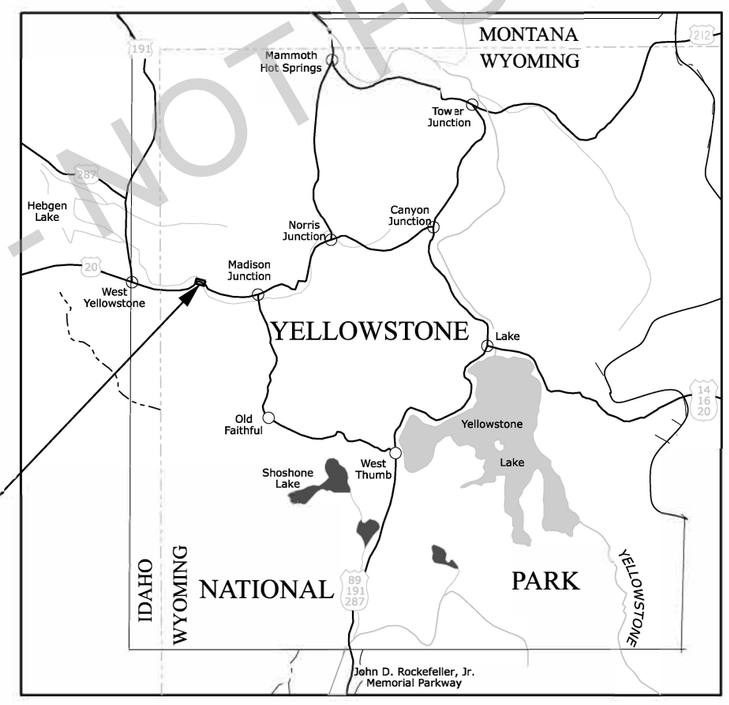

PROJECT LOCATION

See Sheet A.3 for Vicinity Map

NATIONAL PARK SERVICE

SECTION INDEX

A. GENERAL INFORMATION
B. SUMMARY OF QUANTITIES
C. TYPICAL SECTIONS
D. PLAN-PROFILE
E. PARKING AND TRAILS
F. SOIL EROSION AND SEDIMENT CONTROL
G. DRAINAGE
H. WALLS
I. GROUND IMPROVEMENT
J. TEMPORARY TRAFFIC CONTROL
K. PERMANENT TRAFFIC CONTROL
L. ROADSIDE DETAILS
S. STRUCTURES

See Sheet A.2 for complete Sheet Index.

APPROVED:

Chief of Engineering, Western Federal Lands Highway Division — *DATE*

Park Superintendent, Yellowstone National Park — *DATE*

PRELIMINARY - NOT FOR CONSTRUCTION

c:\pw_work\wfl\d0626712\yell15-2_gen.dgn [Title Sheet NPS] 15 May 2026 8:34 AM

SHEET INDEX

A. GENERAL INFORMATION
A.1 TITLE SHEET
A.2 INDEX TO SHEETS
A.3 PLAN SYMBOLS AND ABBREVIATIONS
A.4-5 VICINITY MAP & STAGING

B. SUMMARY OF QUANTITIES
B.1-3 SUMMARY OF QUANTITIES

C. TYPICAL SECTIONS
C.1-2 TYPICAL SECTIONS
C.3 TYPICAL SECTION DETAILS

D. PLAN-PROFILE
D.1 SURVEY CONTROL
D.2-4 TABULATION OF QUANTITIES
D.5 TEMPORARY ALIGNMENT SITE PREPARATION
D.6-7 PLAN AND PROFILE TEMPORARY ALIGNMENT
D.8-10 PLAN AND PROFILE

E. PARKING AND TRAILS
E.1 TABULATION OF QUANTITIES
E.2-7 PICNIC AREA PARKING AND TRAIL
E.8 GNEISS CREEK TRAIL
E.9-12 HISTORY PULLOUT
E.13 TRAIL TYPICALS

F. SOIL EROSION AND SEDIMENT CONTROL
F.1 TABULATION OF QUANTITIES
F.2-3 EROSION CONTROL PLANS TEMPORARY ALIGMENT
F.4-7 EROSION CONTROL PLANS
F.8-10 STANDARD DRAWINGS AND DETAILS

G. DRAINAGE
G.1 TABULATION OF QUANTITIES
G.2 MADISON RIVER BRIDGE RIPRAP LAYOUT
G.3 RIPRAP TYPICAL SECTION
G.4-6 CULVERT CROSS SECTIONS
G.7 STONE MASONRY HEADWALL DETAIL
G.8-11 STANDARD DRAWINGS

H. WALLS
H.1 TABULATION OF QUANTITIES - WALLS
H.2 RETAINING WALL EXHIBIT
H.3 STONE MASONRY GUARDWALL

SHEET INDEX (continued)

I. GROUND IMPROVEMENT
I.1 TABULATION OF QUANTITIES
I.2 GEOTECHNICAL GROUND IMPROVEMENT

J. TERMPORARY TRAFFIC CONTROL
J.1 TABULATION OF QUANTITIES
J.2 TEMPORARY ALIGNMENT PAVEMENT MARKINGS
J.3-9 STANDARD DETAILS

K. PERMANENT TRAFFIC CONTROL
K.1-3 PERMANENET TRAFFIC CONTROL
K.4 SIGN POST AND INSTALLATION DETAIL
K.5 SNOWPOLE HOLDER INSTALLATION DETAILS
K.6-7 STANDARD DETAILS

L. ROADSIDE DETAILS
L.1 STANDARD TURNOUT DETAIL
L.2 CURB AND GUTTER DETAILS
L.3 24-INCH PEDESTRIAN RAIL DETAIL
L.4 42-INCH PEDESTRIAN RAIL DETAIL
L.5 COBBLESTONE MEDIAN DETAIL
L.6 CURB CUT DETAIL
L.7 LANDSCAPING BOULDER DETAIL
L.8 RAMP DETAILS

S. STRUCTURES

See Sheet S.01 for Structures Sheet Index.

PRELIMINARY - NOT FOR CONSTRUCTION

c:\pw_work_wff\d0626712\yell15-2_gen.dgn [Sheet Index]
15 May 2026 8:30 AM

PROJECT	SHEET NUMBER
WY NP YELL 15(2)	A.3

Δ	total central angle
Δc	curve central angle
Ø	diameter
θs	spiral central angle
abut.	abutment
ADT	average daily traffic
AH	ahead
appr.	approach
BK	back
b.f.	back face
BM	bench mark
BP	balance point
br.	bridge
brg.	bearing
btwn	between
cc or c. to c.	center to center
℄	centerline
clr.	clear
CMP	corrugated metal pipe
col.	column
conc.	concrete
conn.	connection
constr. jt.	construction joint
cont.	continuous
CS	point of curve to spiral
ctrs.	centers
CUFT	cubic foot (feet)
culv.	culvert
CUYD	cubic yard(s)
D	diameter
DHV	design hourly volume
dia.	diameter
diaph.	diaphragm
dist.	distance
drwg(s).	drawing(s)
E	east
e	superelevation rate
e.f.	each face
El. 94.16	elevation in feet
elev.	elevation
emb.	embankment
EOP	edge of pavement
EQ or eq.	equation
EW	edge of water
exc.	excavation
exp. jt.	expansion joint
f.f.	front face
fin.	finish
flg.	flange
ftg.	footing
ga.	gage (gauge)
galv.	galvanized
ID	inside diameter
IE	invert elevation
jt.	joint
KSI	thousand pounds per square inch
L	length of curve
lat.	latitude
LNFT	linear foot (feet)
long.	longitudinal
LPSM	lump sum
Ls	length of spiral
lt. or LT	left
LW	low water
M.L.	main line
M.P.	mile post
matl.	material
max.	maximum
MGAL	thousand gallon
min.	minimum
mon.	monument
N	north
NC	normal crown
o.c.	on center
o. to o.	out to out
OD	outside diameter
OG	original ground
OHWM	ordinary high water mark
PC	point of curve
PCC	point of compound curve
PCS	point of curve to spiral
PI	point of intersection
pl.	plate
POC	point on curve
POS	point on spiral
POT	point on tangent
PS	point of tangent to spiral
PSF	pounds per square foot
PSI	pounds per square inch
PSC	point of spiral to curve
PST	point of spiral to tangent
PT	point of tangent
pvmt.	pavement
R	radius
R.	range
R/W	right-of-way
rdwy.	roadway
reinf.	reinforcement
reqd.	required
rt. or RT	right
rte.	route
S	south
SADT	seasonal average daily traffic
SC	point of spiral to curve
sect.	section
shldr.	shoulder
SLRY	slurry unit
spa.	spacing, spaces or spaced
SQFT	square foot
SQYD	square yard
SRS	point of spiral to reverse spiral
SS	point of spiral to spiral (no curve)
ST	point of spiral to tangent
STA, Sta.	station
std.	standard
stgr.	stringer
stiff.	stiffener
struc.	structural
STS	point of spiral to tangent spiral
T	tangent distance
T.	township
TBM	temporary bench mark
thd.	thread
TS	point of tangent to spiral
Ts	tangent distance (spiraled curve)
typ.	typical
V	design speed (velocity)
vph	vehicles per hour
VPI	vertical point of intersection
W	west

NOTE:

1. Other symbols used in the plans will be shown in a legend on the appropriate plan sheet.

National Boundary
State Boundary
County Boundary
City Boundary
Township or Range Line
Section Line
Section Corner (Found, Projected)
¼ Section Line
¼ Section Corner (Found, Projected)
1/16 Section Line
1/16 Section Corner (Found, Projected)
Property Line
Parcel Number
National Park Boundary
National Forest Boundary
National Wildlife Refuge Boundary
BLM Lands Boundary
Indian Reservation Boundary
Existing Roadway (Paved, Gravel)
Railroad
Trail
Fiber Roll
Silt Fence
Sandbag
Intermittent Drainage or Small Creek
Large Creek or River
Lake, Pond or Reservior; Marshland
Spring or Seep
Treeline; Individual Trees
Material Source; Bore Hole; Test Pit
Spot Elevation; Coordinate Grid Tick
Above Ground Tank; Underground Tank
Boulder; Well; Antenna; Grave
Cooking Grate; Garbage Can; Picnic Table
Flagpole; Fire Hydrant
Gas & Water Meter; Gas & Water Valve
Control Point (Terrestrial and GPS)

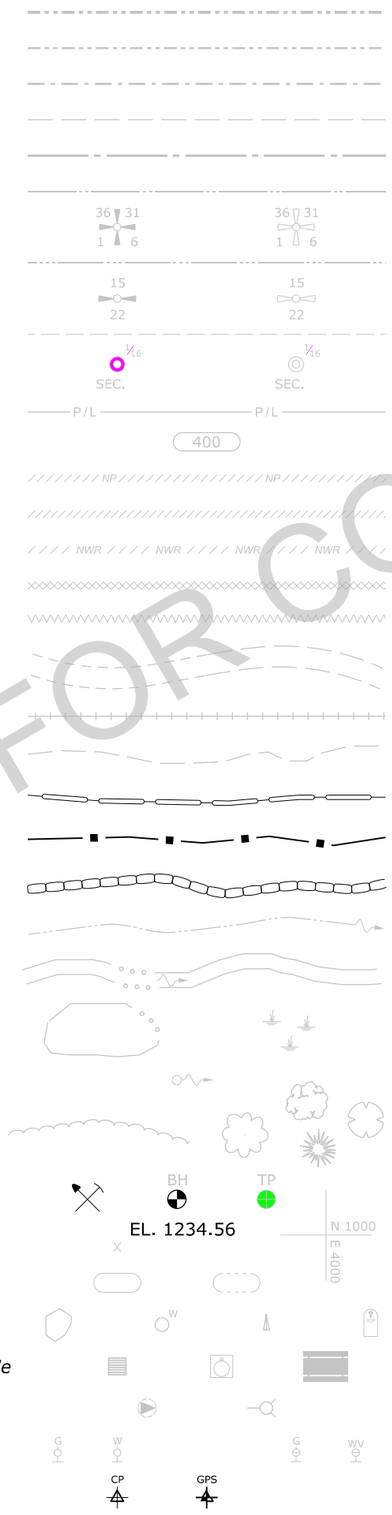

North Arrow

	EXISTING	PROPOSED
Slope Stake Limits	Top of Cut / Toe of Fill	
Construction Limits	- no symbol -	
Bottom of Ditch		
Fence		
Gate with Fence		
Cattleguard		
Guardrail		
Concrete Barrier and Guard Wall		
Retaining Wall	wall face	
Signs (single, double post; portable)		
Delineators		
Pipe Culvert (arrow shows flow)		
Pipe Culvert with End Section		
Pipe Culvert with Headwall		
Pipe Culvert with Drop Inlet	DI	DI
Box Culvert		
Underdrain	UD	UD
Overhead/Above Ground Utilities	P	P
Underground Utilities	W	W

FM = force main, FO = fiber optic, G = gas, IRR = irrigation, O = oil, P = power, SA = sanitary sewer, SD = storm drain, SS = storm sewer, STEAM = steam, T = telephone, TV = CATV, W = water

Poles (Power, Telephone, Joint Use, Light, Support w/Anchor)

Miscellaneous Utility Features — TP

EM = electric meter, TP = telephone pedestal, TV = CATV pedestal, UP = transformer or junction box, WF = water fountain

Building

Right-of-Way Line — r/w — R/W

Permanent Easement — P/E — P/E

Construction Easement — - no symbol - — TCE

Riprap

Section A-A — A A

NO SCALE

U.S. DEPARTMENT OF TRANSPORTATION
FEDERAL HIGHWAY ADMINISTRATION
OFFICE OF FEDERAL LANDS HIGHWAY

WFLHD DETAIL

PLAN SYMBOLS AND ABBREVIATIONS

DETAIL APPROVED FOR USE 11/2001
REVISED: 9/2005 1/2007 10/2009 10/2014 6/2022

DETAIL W 101-1

PRELIMINARY - NOT FOR CONSTRUCTION

c:\pw_work_wfl\d0626712\yell15-2_gen.dgn [Det W101-1] 15 May 2026 8:30 AM

PROJECT	SHEET NUMBER
WY NP YELL 15(2)	A.4

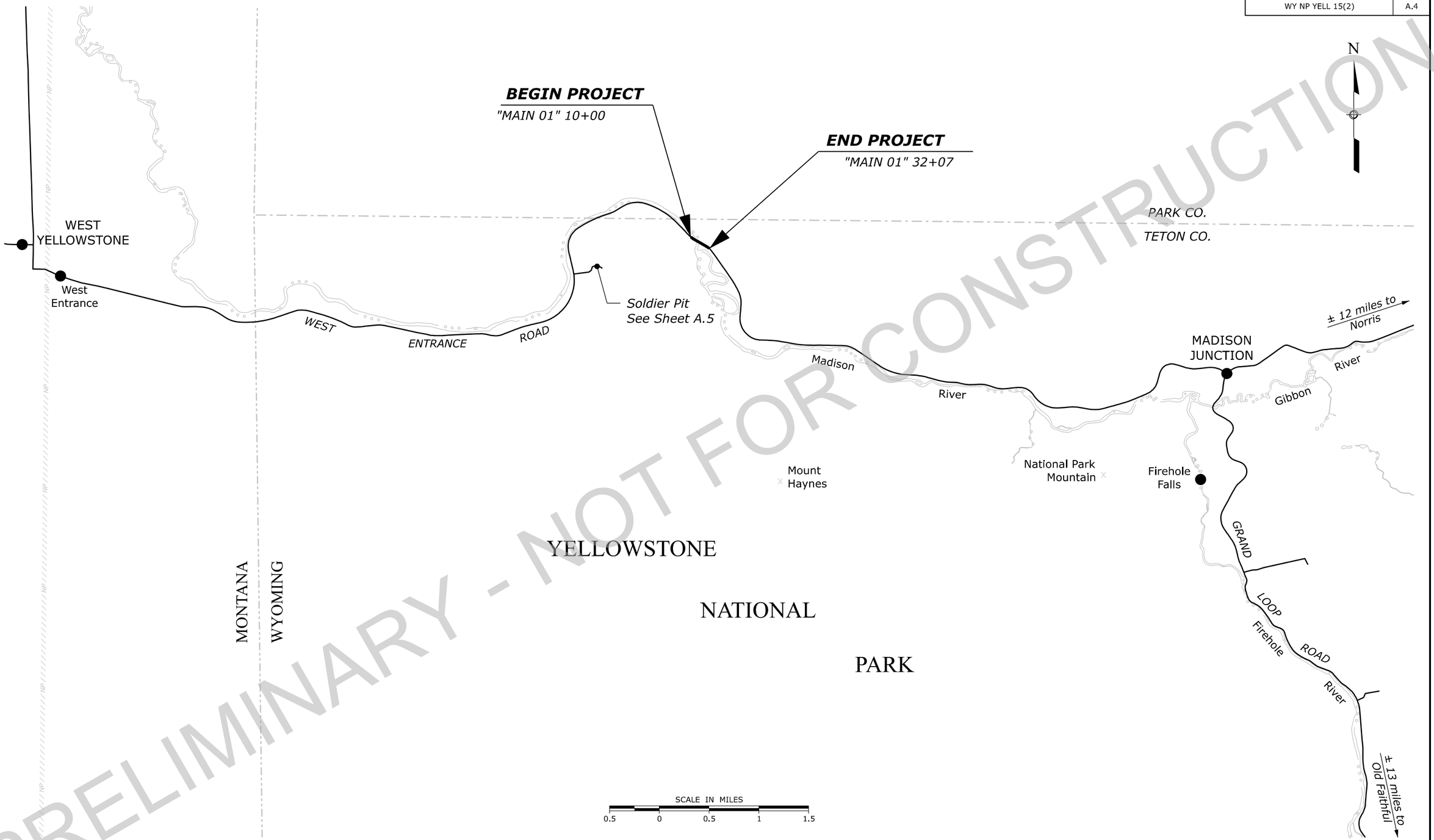

PRELIMINARY - NOT FOR CONSTRUCTION

c:\pw_work_wff\d0626712\yell15-2_gen.dgn [Vdnthy Map]
15 May 2026 8:30 AM

VICINITY MAP

PROJECT	SHEET NUMBER
WY NP YELL 15(2)	A.5

LEGEND:

Available staging area (~4490 square yards)

NOTES:

1. Maintain 33 foot offset between limits of staging area and existing gravel.

2. Shown area and dimensions are approximate. See Subsection 105.04.

SOLDIER PIT STAGING AREA

PRELIMINARY NOT FOR CONSTRUCTION

c:\pw_work\wfhd0626712\yell15-2_gen.dgn [Soldier Pit-1 (Sheet)]
15 May 2026 8:30 AM

© 2026 Microsoft Corporation © 2026 Maxar ©CNES (2026) Distribution Airbus DS

PROJECT	SHEET NUMBER
WY NP YELL 15(2)	C.1

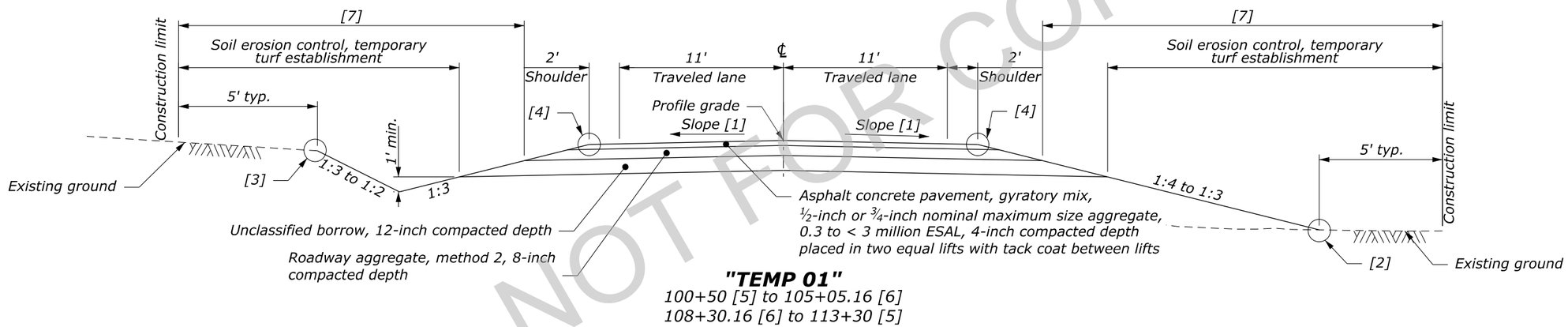

PRELIMINARY - NOT FOR CONSTRUCTION

NOTE:
1. Construct variations of slopes and clearing limits according to the Physical Data (SCR 102.02A).
2. Apply asphalt tack coat to contact surfaces of pavements

FOOTNOTE:
[1] Superelevate roadway according to superelevation report. See Physical Data (SCR Section 102.02A).
[2] See Fill Slope Rounding detail.
[3] See Cut Slope Rounding detail.
[4] See Safety Edge detail.
[5] Match cross slopes and profile of existing road. See Pavement Connection detail.
[6] Temporary Traffic Bridge
[7] End condition mirrored on opposite side in different sections.

TYPICAL SECTIONS
Sheet 1 of 2

15 May 2026 9:07 AM c:\pw_work_wff\d0626714\yell15-2_typ.dgn [Typical Section Temp All]

PROJECT	SHEET NUMBER
WY NP YELL 15(2)	C.2

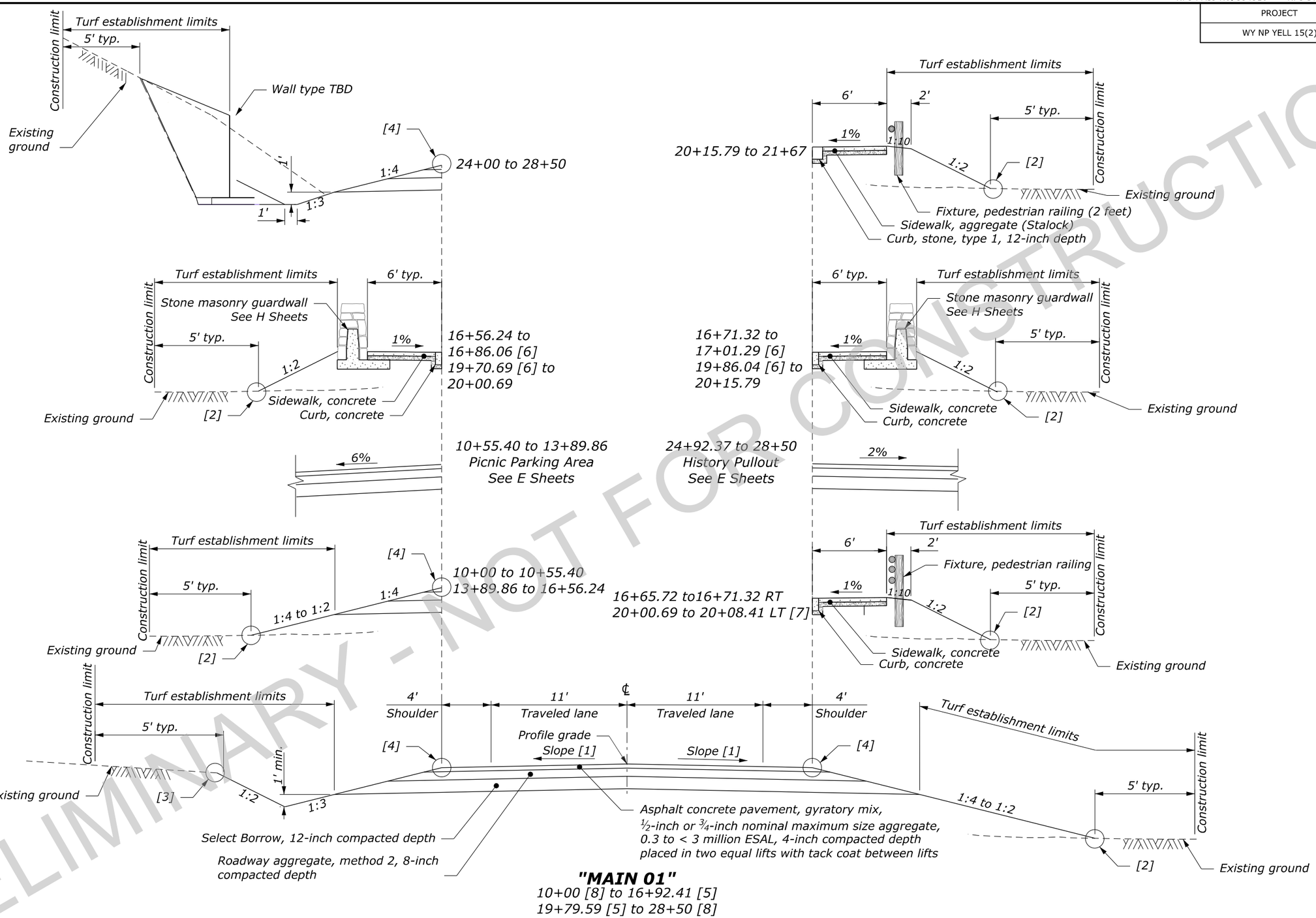

PRELIMINARY - NOT FOR CONSTRUCTION

NOTE:
1. Construct variations of slopes, clearing limits, sidewalk widths, and roadway widths according to the Physical Data (SCR 102.02A).
2. Apply asphalt tack coat to contact surfaces of pavements, curbs, gutters, cobblestone medians and inlet grate frames.
3. Perform mulching, hydraulic method and seeding, dry method within turf establishment limits.

FOOTNOTE:
[1] Superelevate roadway according to superelevation report. See Physical Data (SCR Section 102.02A).
[2] See Fill Slope Rounding detail.
[3] See Cut Slope Rounding detail.
[4] See Safety Edge detail.
[5] Proposed Madison River bridge sleeper slab location, at roadway centerline. See S Sheets.
[6] Proposed Madison River bridge wingwall end. See S Sheets.
[7] Mirror end condition on left side of road.
[8] Match cross slopes and profile of existing road. See Pavement Connection detail.

TYPICAL SECTIONS
Sheet 2 of 2

c:\pw_work_wfl\d0626714\yell15-2_typ.dgn [Typical Section]
15 May 2026 9:07 AM

PROJECT	SHEET NUMBER
WY NP YELL 15(2)	C.3

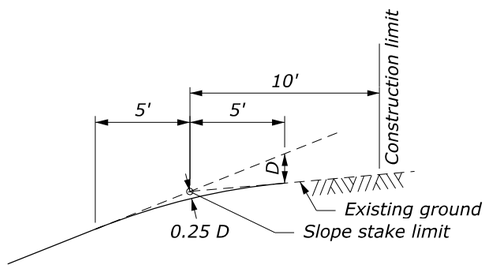

CUT SLOPE ROUNDING

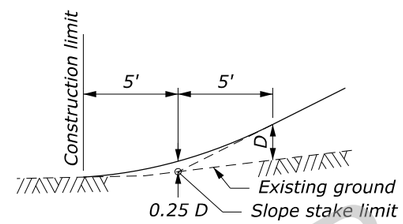

FILL SLOPE ROUNDING

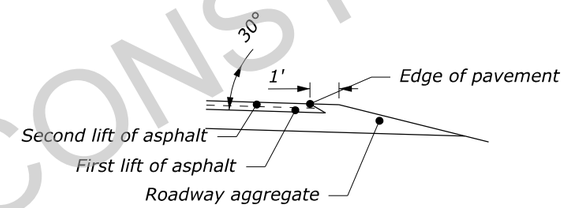

SAFETY EDGE

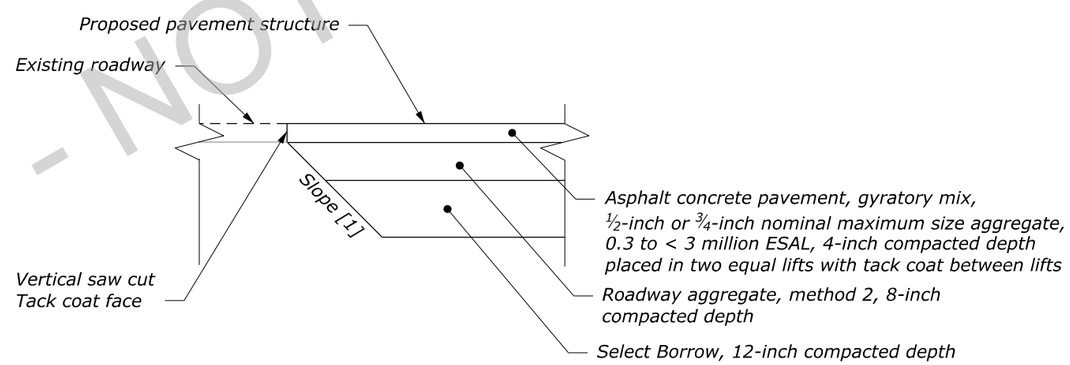

PAVEMENT CONNECTION

FOOTNOTES:

[1] For transverse tie-ins to existing pavement, taper profile below asphalt at a slope of 1:10.
For longitudinal tie-ins to existing pavement, taper profile below asphalt at a slope of 1:1.

TYPICAL SECTION DETAILS

PRELIMINARY - NOT FOR CONSTRUCTION

c:\pw_work_wfl\d0626714\yell15-2_typ.dgn [Typical Section - Details]
15 May 2026 9:10 AM

PROJECT	SHEET NUMBER
WY NP YELL 15(2)	D.1

PROJECT : Madison River Bridge
DATE OF FIELD WORK :Multiple entries
DATE OF FINAL ADJUSTMENT : 10/21/2024

PROJECT UNITS : International foot

COORDINATE SYSTEM : Wyoming West SPCS NAD83 2011
VERTICAL DATUM : Orthometric elevations based on the NAVD88 GEOID18
EPOCH DATE : 2010.000
CADD SYSTEM COORDINATE SYSTEM : WY83/2011-WIF NSRS11(NAD83/2011) Wyoming, West Zone, International Foot

POINT NUMBER	STATE PLANE COORDINATES			GEO COORDINATES				DESCRIPTION
	NORTH	EAST	ORTHOMETRIC ELEVATION	LATITUDE	LONGITUDE	ELLIPSOID HEIGHT	COMBINED FACTOR	
23101	1847935.404	2393725.059	6745.748	44°40'01.409055"N	110°58'15.741148"W	6716.746	0.99967752	5/8" ir w/fhwa alum cap
23102	1847661.491	2394050.399	6746.713	44°39'58.739487"N	110°58'11.198552"W	6717.713	0.999677303	5/8" ir w/fhwa alum cap
23103	1847360.198	2394400.138	6749.050	44°39'55.802142"N	110°58'06.314383"W	6720.051	0.999677007	5/8" ir w/fhwa alum cap
23104	1846886.238	2394813.790	6752.324	44°39'51.166715"N	110°58'00.520196"W	6723.323	0.999676633	5/8" ir w/fhwa alum cap
23105	1846622.124	2395331.584	6751.077	44°39'48.614287"N	110°57'53.316867"W	6722.081	0.999676421	5/8" ir w/fhwa alum cap
23106	1846365.248	2395741.690	6754.913	44°39'46.121721"N	110°57'47.604648"W	6725.919	0.999676023	5/8" ir w/fhwa alum cap
23107	1845912.875	2396053.089	6757.338	44°39'41.688286"N	110°57'43.228993"W	6728.341	0.999675745	5/8" ir w/fhwa alum cap
23108	1845491.477	2396355.926	6761.080	44°39'37.559730"N	110°57'38.976588"W	6732.080	0.999675408	5/8" ir w/fhwa alum cap
24093	1848394.583	2390915.276	6745.964	44°40'05.638805"N	110°58'54.686997"W	6716.927	0.999679002	5/8" ir w/fhwa alum cap
24094	1848577.131	2390992.793	6740.022	44°40'07.449659"N	110°58'53.642300"W	6710.989	0.999679244	5/8" ir w/fhwa alum cap
24095	1848726.925	2391238.989	6739.563	44°40'08.955454"N	110°58'50.258687"W	6710.537	0.999679135	5/8" ir w/fhwa alum cap
24096	1848707.273	2391483.728	6747.887	44°40'08.788009"N	110°58'46.869397"W	6718.864	0.999678607	5/8" ir w/fhwa alum cap
24097	1848786.045	2391921.527	6744.593	44°40'09.613278"N	110°58'40.823816"W	6715.576	0.999678531	5/8" ir w/fhwa alum cap
24098	1848701.075	2392440.203	6744.426	44°40'08.830473"N	110°58'33.634315"W	6715.416	0.999678263	5/8" ir w/fhwa alum cap
24099	1848516.798	2392913.105	6745.802	44°40'07.062076"N	110°58'27.063191"W	6716.796	0.999677947	5/8" ir w/fhwa alum cap
24100	1848237.667	2393416.898	6746.150	44°40'04.360341"N	110°58'20.050448"W	6717.148	0.999677664	5/8" ir w/fhwa alum cap

NOTE:

1. *To precisely check distances between points as measured on the ground, inverse the state plane coordinates and divide the computed distance by a mean combined factor of the two points.*

PRELIMINARY - NOT FOR CONSTRUCTION

SURVEY CONTROL

9-Apr-2025 11:00 AM C:\Users\adam.davies\Documents\Projects_2025\Yellowstone\Madison river bridge\control\sheet\MRB_Controlsheet\Exported Data\[Madison river bridge control-sheet.xlsx]Sheet

PROJECT	SHEET NUMBER
WY NP YELL 15(2)	D.4

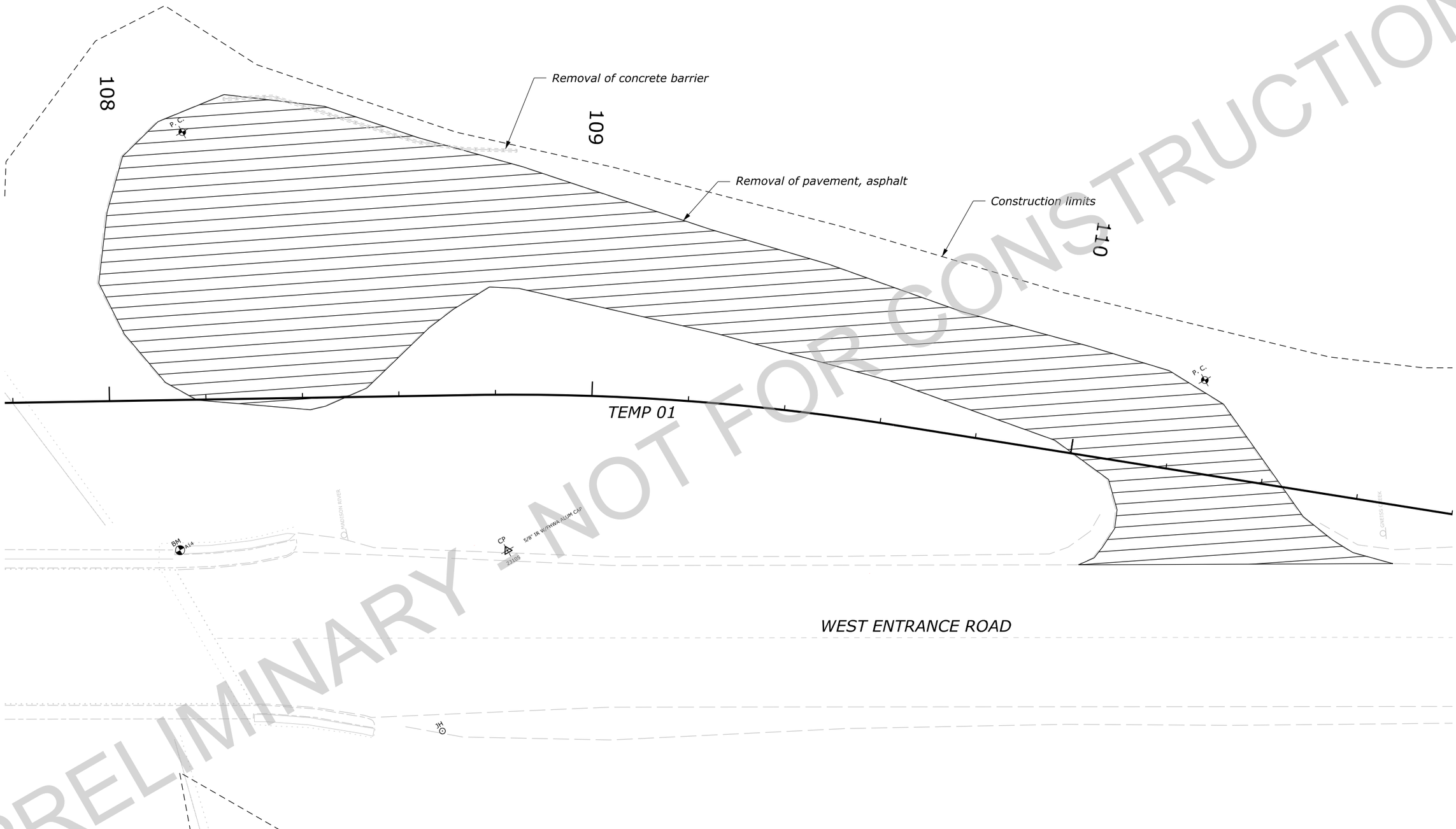

PRELIMINARY - NOT FOR CONSTRUCTION

LEGEND:

Removal of pavement, asphalt

TEMPORARY ALIGNMENT
SITE PREPARATION
GNEISS CREEK TRAILHEAD

c:\pw_work_wfl\d0626715\yell15-2_dh_pp_Temporary_Alignment.dgn [Removal Gneiss Creek (Sheet)]
15 May 2026 9:38 AM

PROJECT	SHEET NUMBER
WY NP YELL 15(2)	D.5

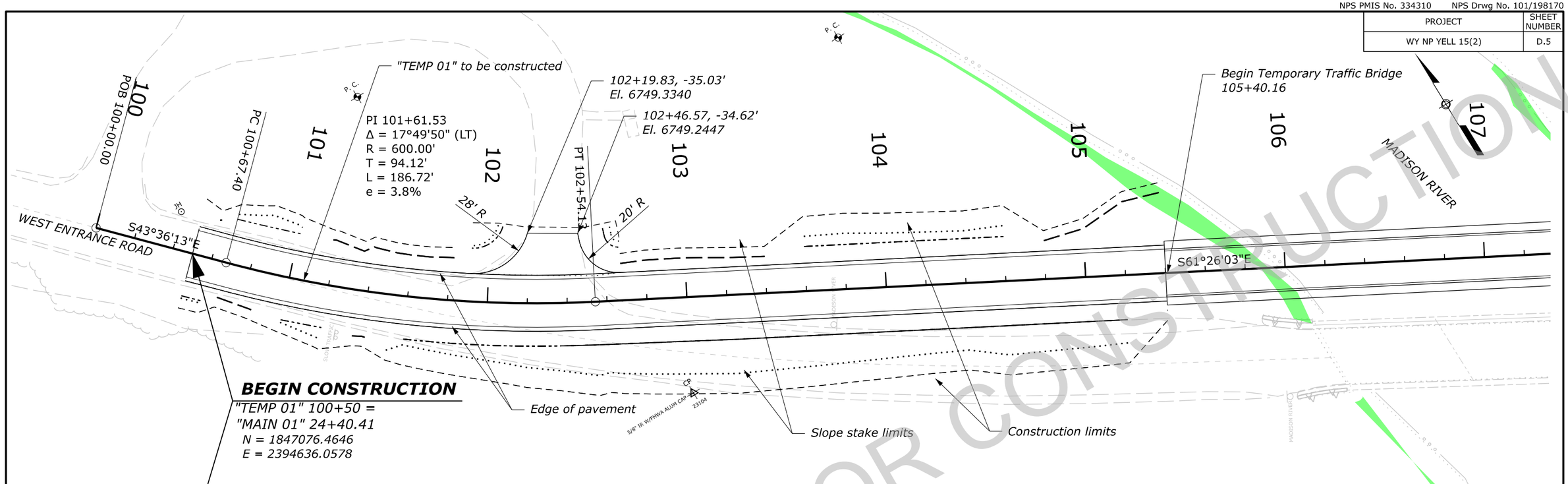

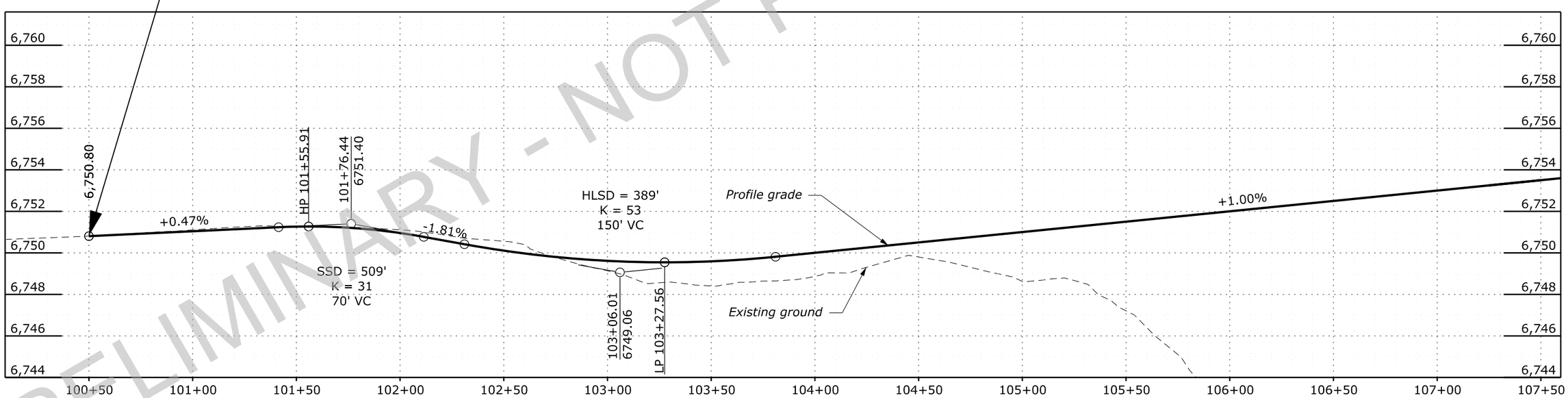

PRELIMINARY - NOT FOR CONSTRUCTION

LEGEND:
Wetland

PLAN AND PROFILE
TEMPORARY ALIGNMENT
100+50 TO 107+50

c:\pw_work\wfl\d0626715\yell15-2_pln_pp_Temporary_Alignment.dgn [BL - Plan 1 (Sheet)]
15 May 2026 9:51 AM

PROJECT	SHEET NUMBER
WY NP YELL 15(2)	D.6

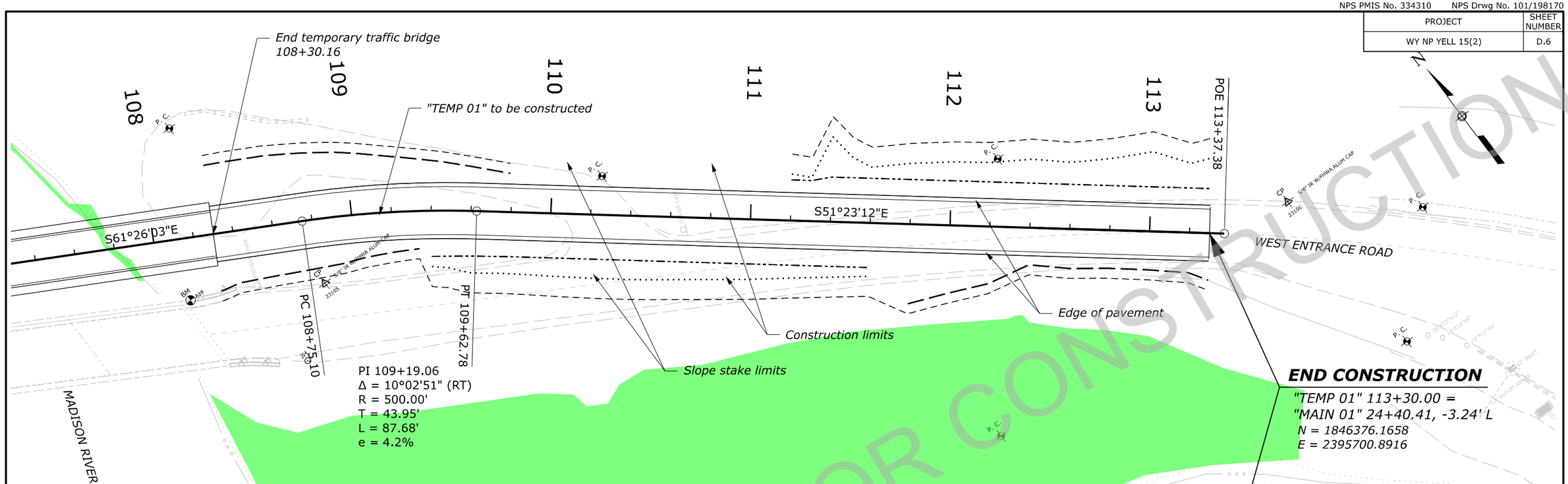

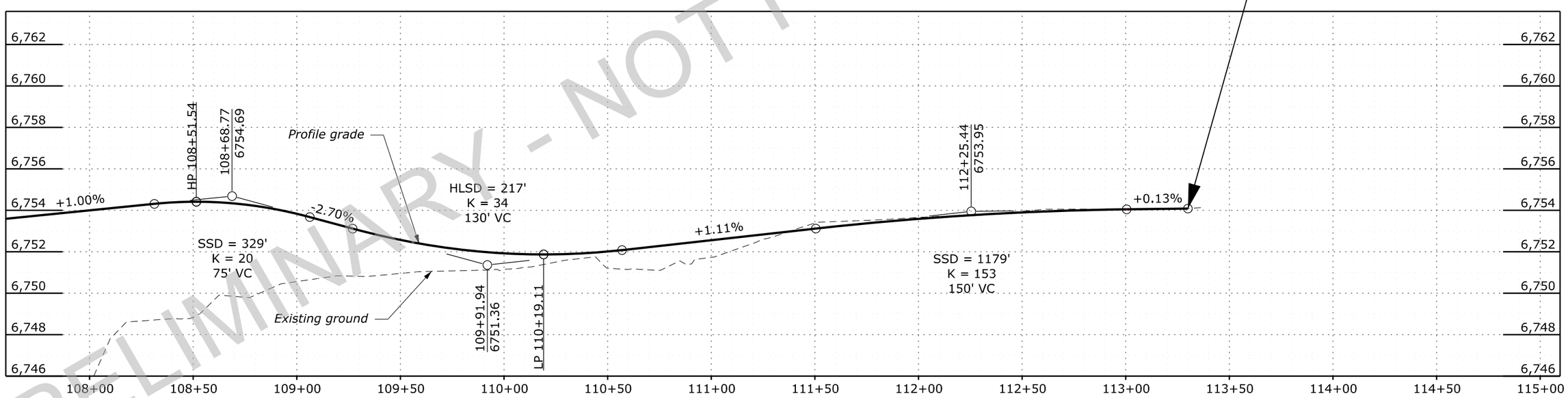

PRELIMINARY - NOT FOR CONSTRUCTION

LEGEND:

Wetland

PLAN AND PROFILE
TEMPORARY ALIGNMENT
107+50 TO 113+30

c:\pw_work\wfh\d0626715\yell15-2_pln_pp_Temporary_Alignment.dgn [BL - Plan 2 (Sheet)]
15 May 2026 9:51 AM

PROJECT	SHEET NUMBER
WY NP YELL 15(2)	D.7

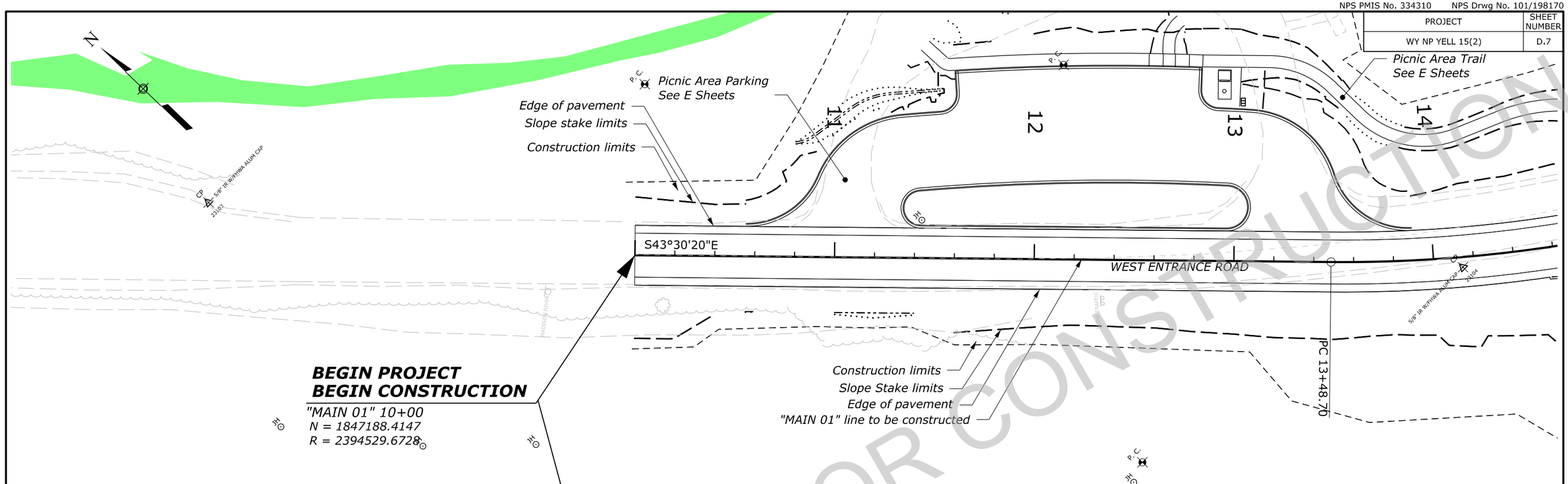

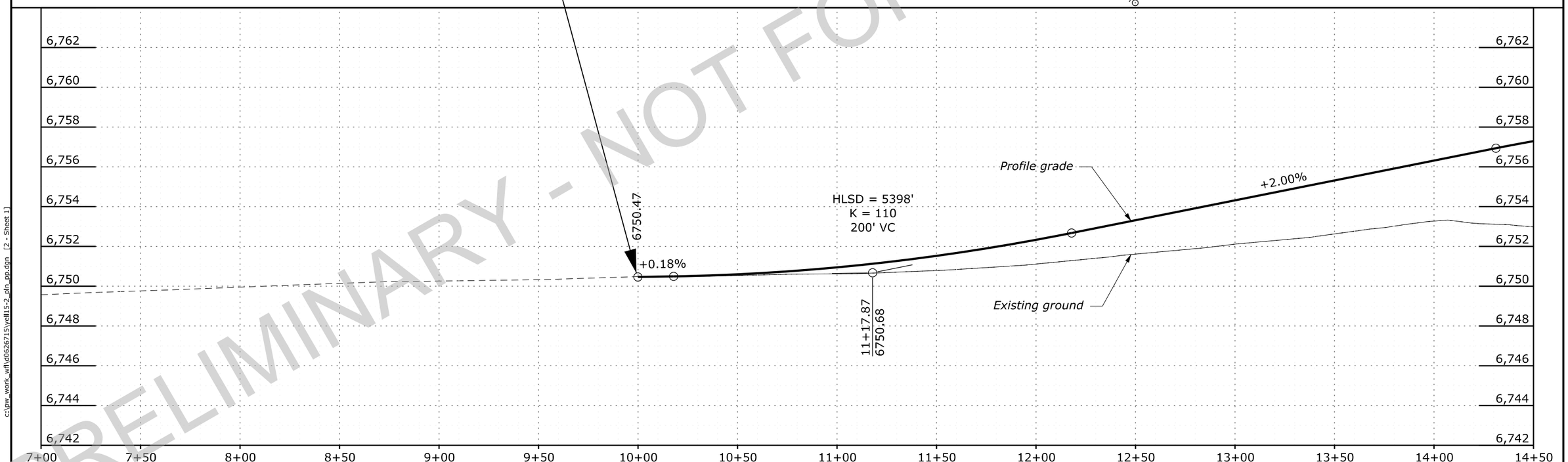

PRELIMINARY - NOT FOR CONSTRUCTION

LEGEND:

- *Wetland*
- *Archeological - eligible*

PLAN AND PROFILE
10+00 TO 14+50

c:\pw_work\wfl\d0626715\yell15-2_pln_pp.dgn [2 - Sheet 1]
22 April 2026 9:40 AM

PROJECT	SHEET NUMBER
WY NP YELL 15(2)	D.8

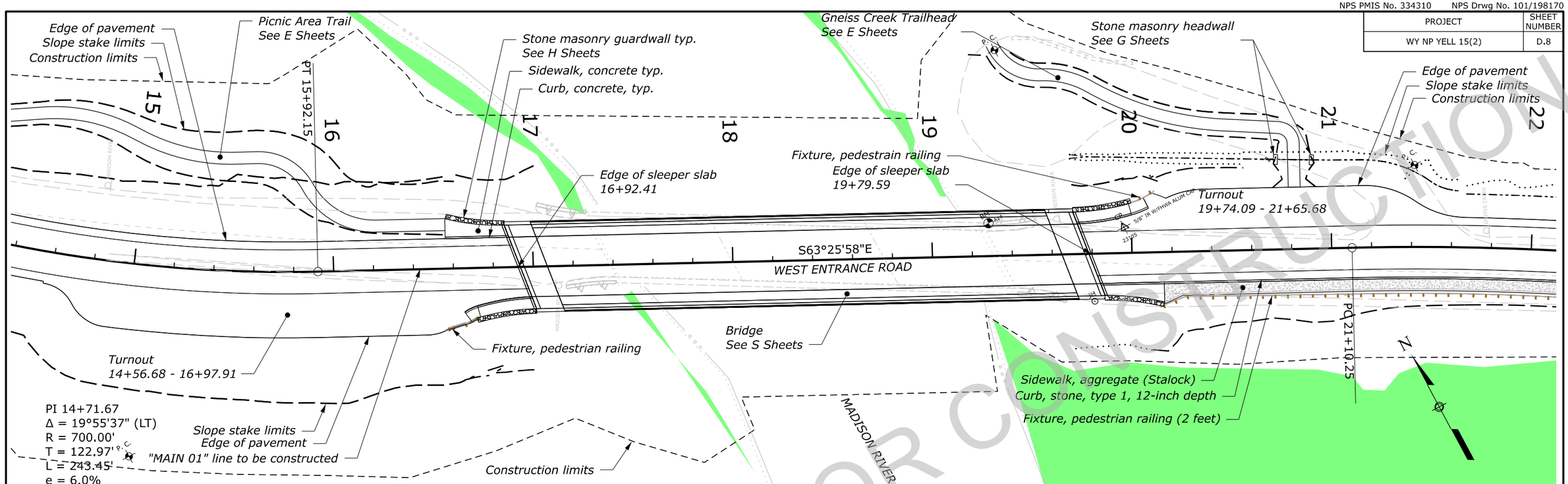

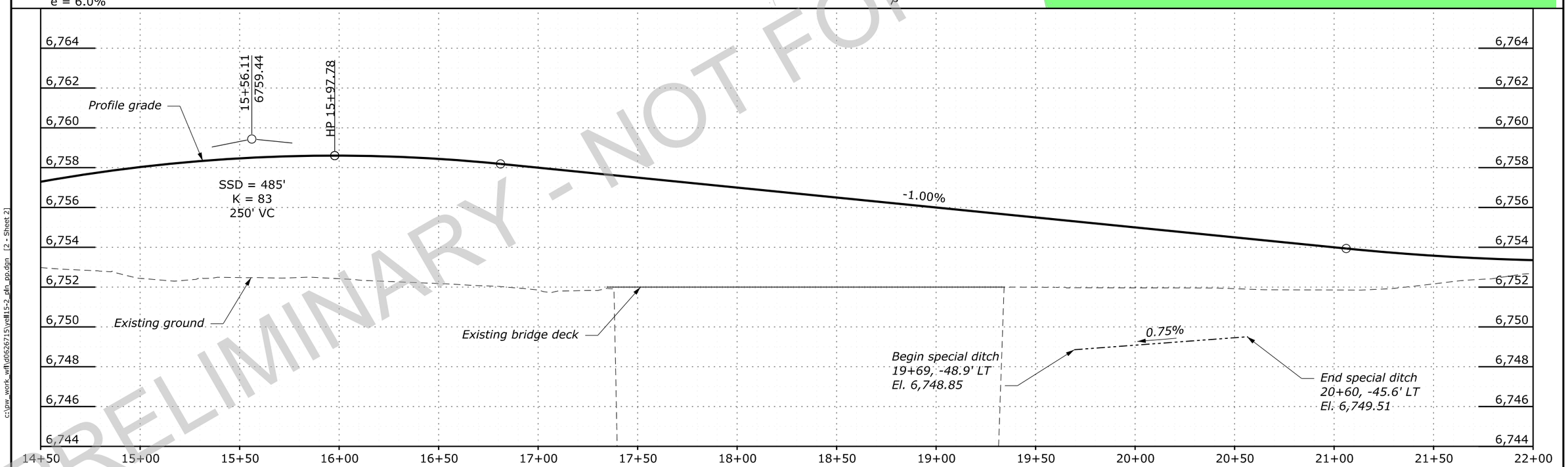

PRELIMINARY - NOT FOR CONSTRUCTION

LEGEND:

- *Wetland*
- *Archeological - eligible*

PLAN AND PROFILE
14+50 TO 22+00

c:\pw_work_wfl\d0626715\yell15-2_pln_pp.dgn [2 - Sheet 2]
15 May 2026 11:06 AM

PROJECT	SHEET NUMBER
WY NP YELL 15(2)	D.9

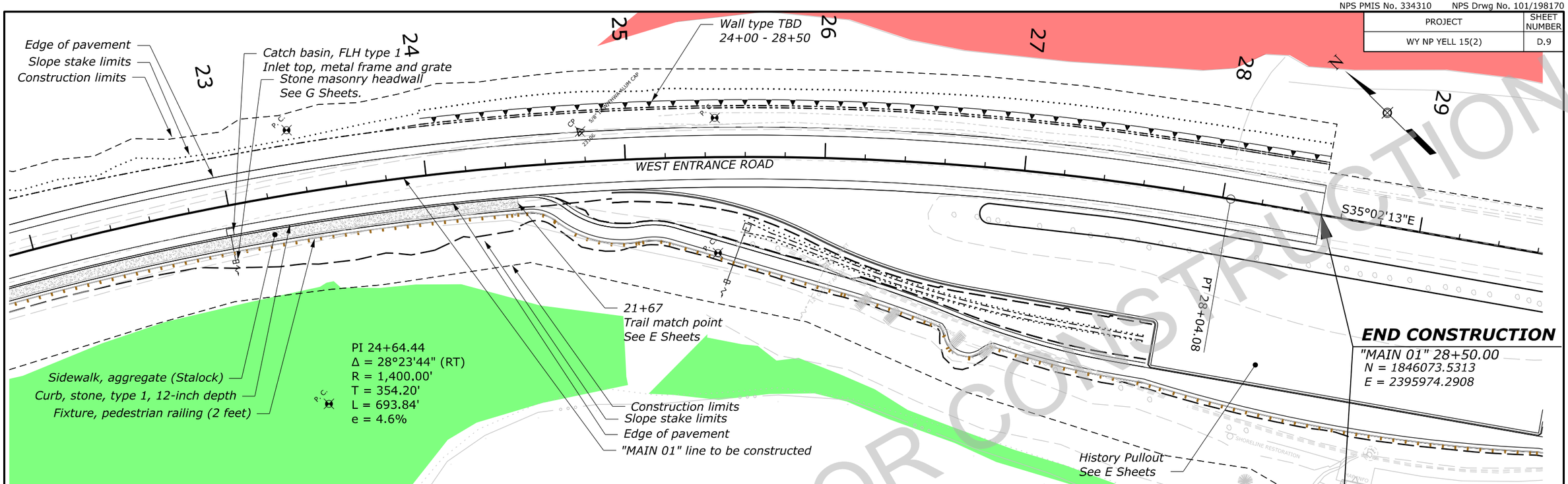

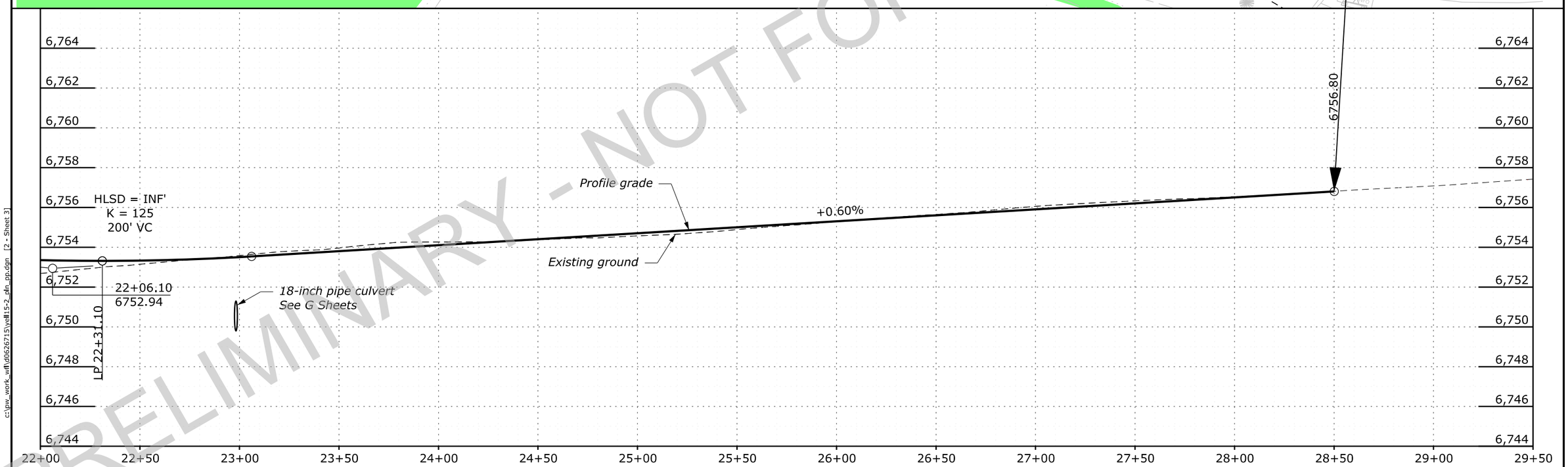

PRELIMINARY - NOT FOR CONSTRUCTION

LEGEND:

- *Wetland*
- *Archeological - eligible*

PLAN AND PROFILE
22+00 TO 29+50

c:\pw_work_vdfl\d0626715\yell15-2_pln_pp.dgn [2 - Sheet 3]
22 April 2026 8:15 AM

PROJECT	SHEET NUMBER
WY NP YELL 15(2)	D.10

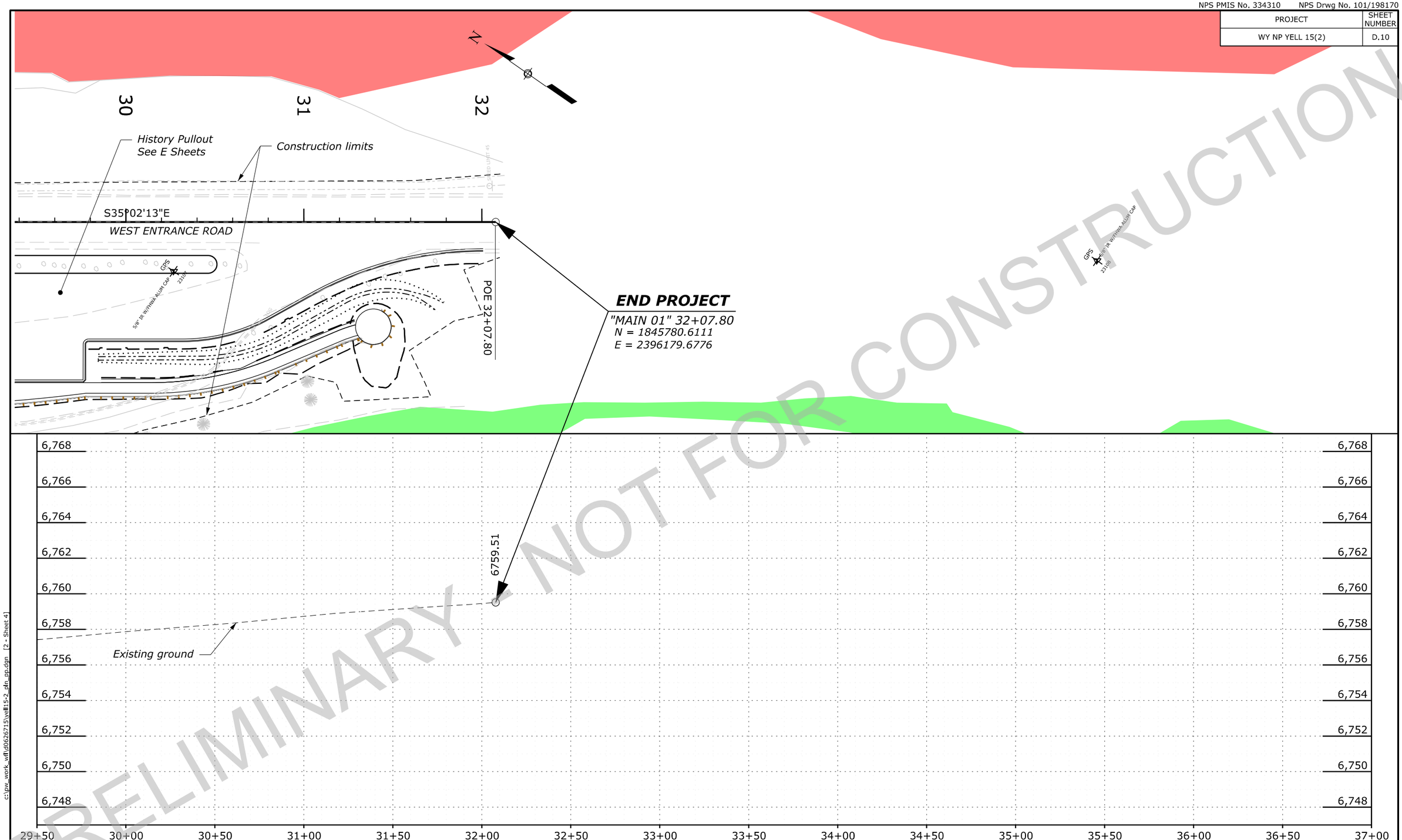

PRELIMINARY - NOT FOR CONSTRUCTION

LEGEND:

- *Wetland*
- *Archeological - eligible*

PLAN AND PROFILE
29+50 TO END OF PROJECT

c:\pw_work_vdfl\d0626715\yell15-2_pln_pp.dgn [2 - Sheet 4]
22 April 2026 8:15 AM

PROJECT	SHEET NUMBER
WY NP YELL 15(2)	E.2

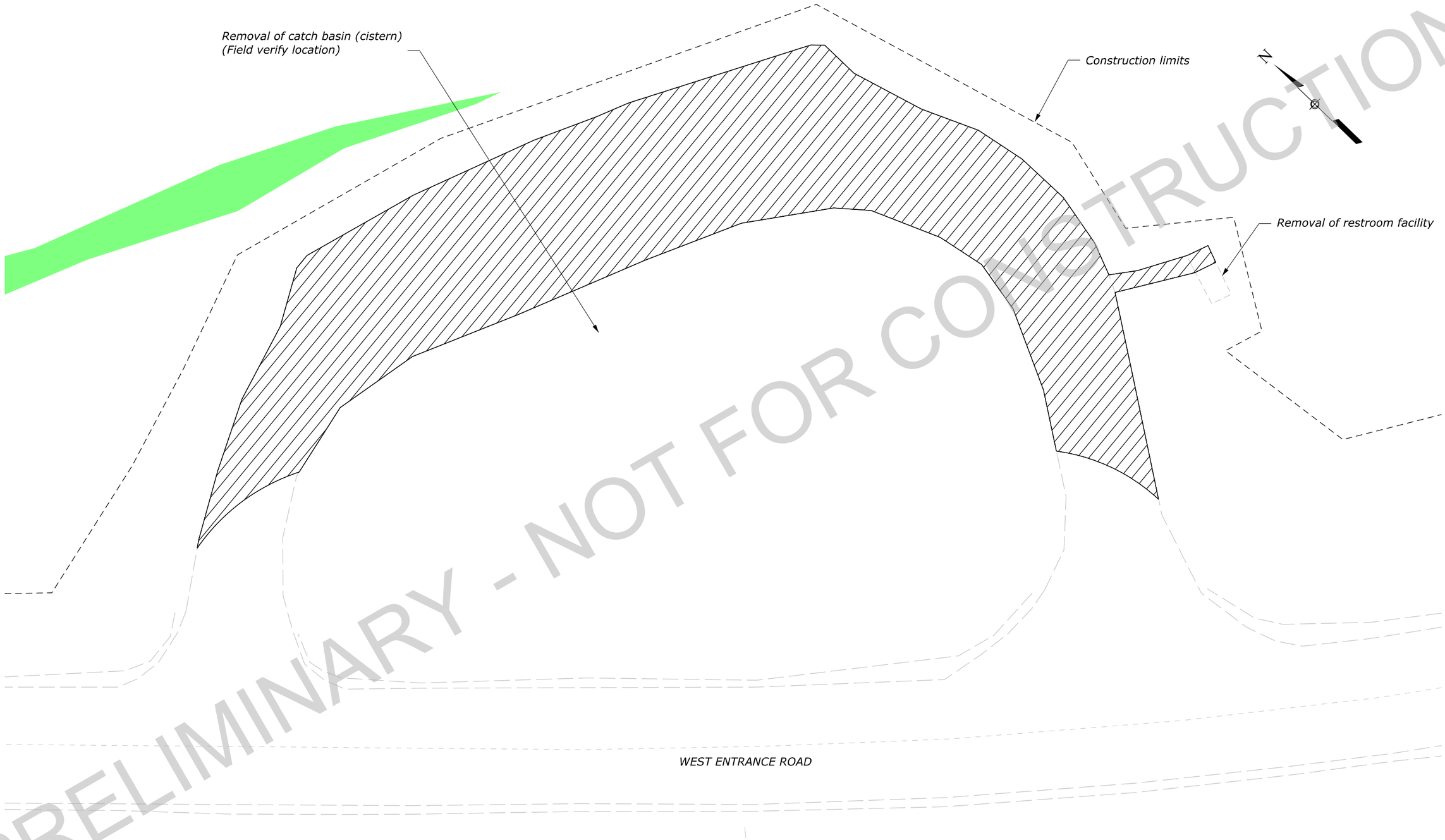

PRELIMINARY - NOT FOR CONSTRUCTION

LEGEND:

- *Obliteration, method 1*
- *Wetland*

PICNIC AREA PARKING SITE PREPARATION

c:\pw_work\wfl\d0696551\WPark & Gneiss Creek Plan Sheets.dgn [2 - W Park Site Preparation [Sheet]]
22 April 2026 9:53 AM

PROJECT	SHEET NUMBER
WY NP YELL 15(2)	E.3

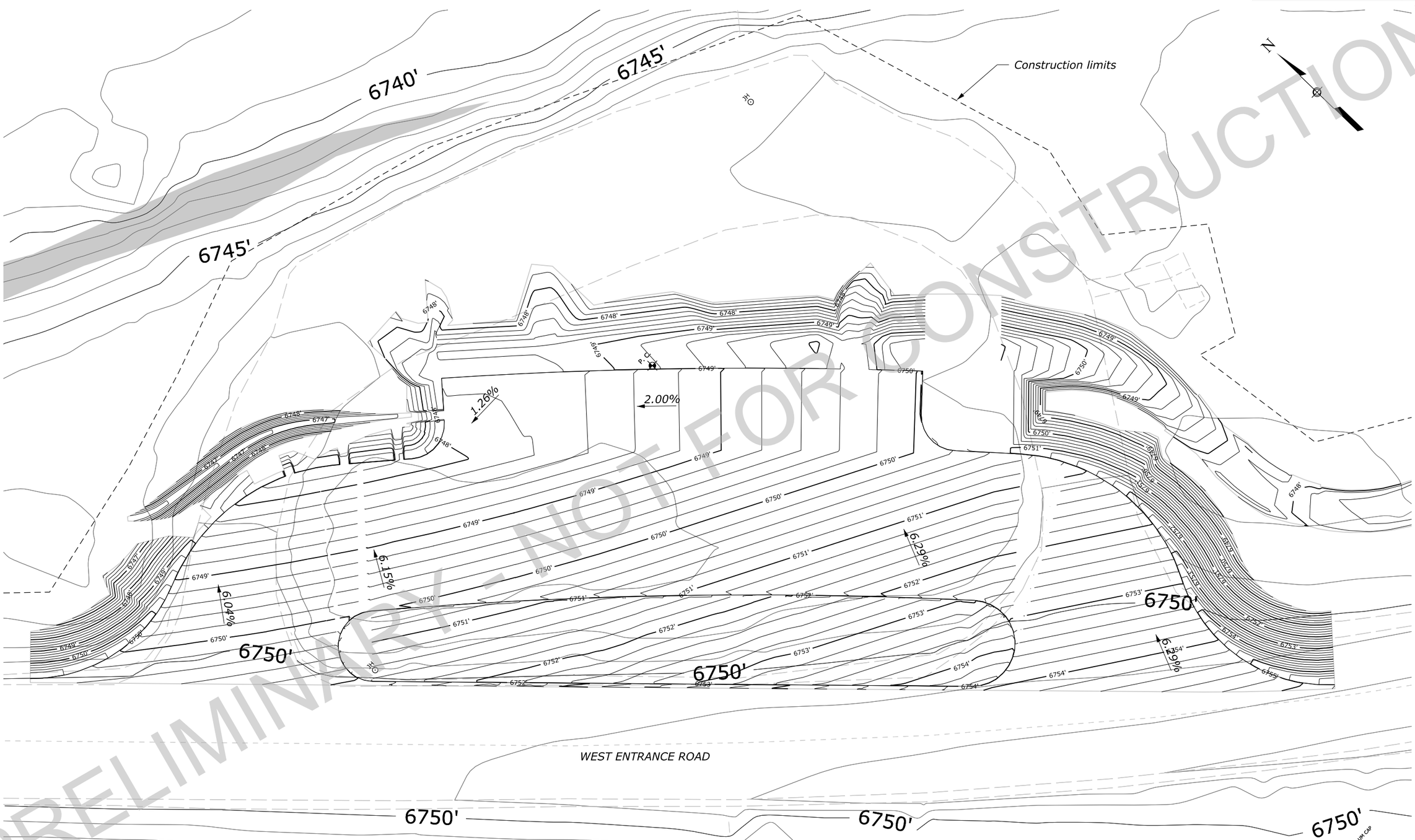

PRELIMINARY - NOT FOR CONSTRUCTION

LEGEND:

Wetland

PICNIC PARKING AREA GRADING

c:\pw_work_wflld0696551\WPark & Gneiss Creek Plan Sheets.dgn [2-Grading W Lot (Sheet)]
22 April 2026 9:57 AM

PROJECT	SHEET NUMBER
WY NP YELL 15(2)	E.4

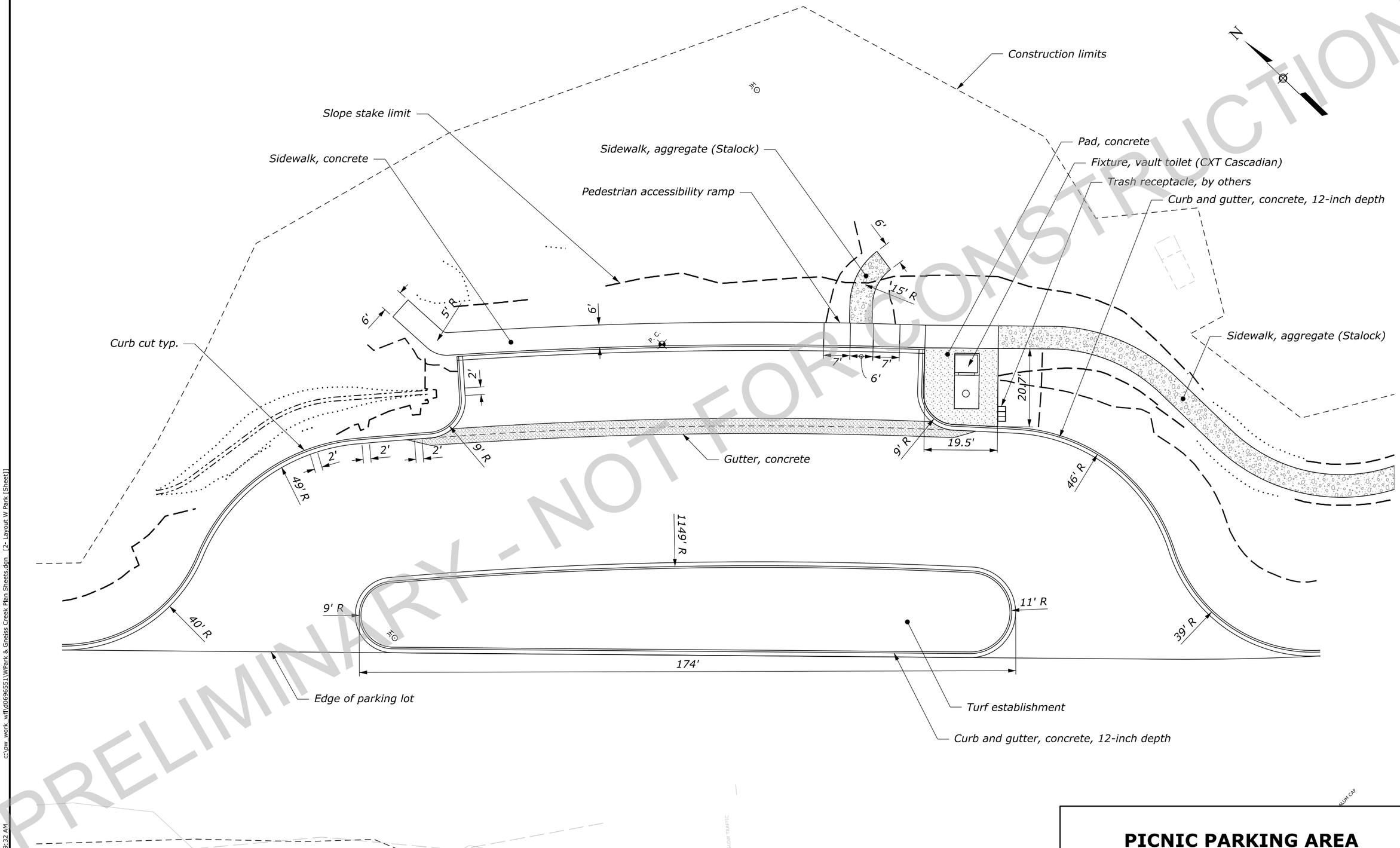

PRELIMINARY - NOT FOR CONSTRUCTION

PICNIC PARKING AREA PLAN

c:\pw_work_wfl\d0696551\WPark & Grass Creek Plan Sheets.dgn [2- Layout W Park (Sheet)]
15 May 2026 9:32 AM

PROJECT	SHEET NUMBER
WY NP YELL 15(2)	E.5

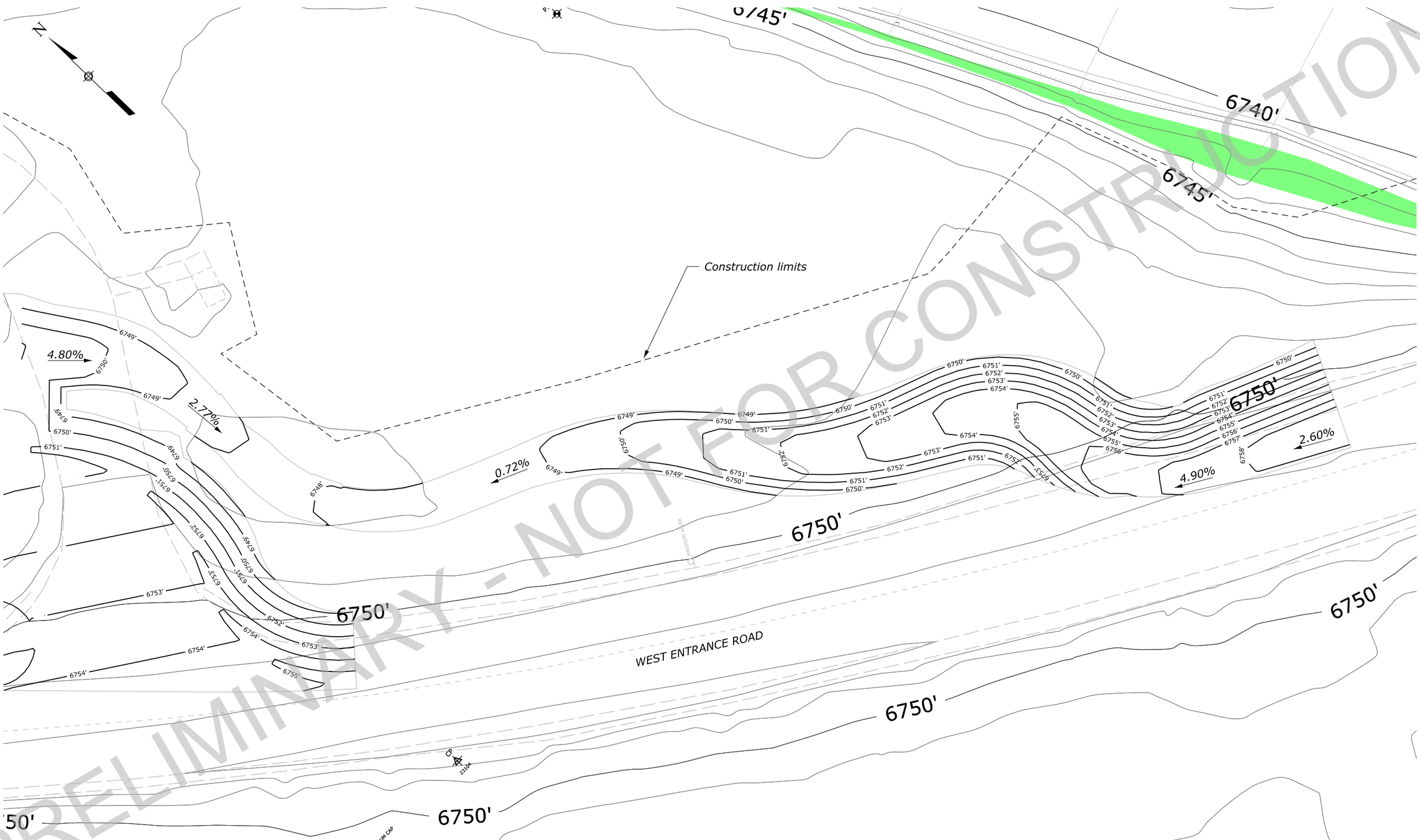

PRELIMINARY - NOT FOR CONSTRUCTION

LEGEND:

Wetland

PICNIC AREA TRAIL GRADING PLAN

c:\pw_work\wfl\d0696551\WPark & Grass Creek Plan Sheets.dgn [2-Grading Ped Path (Sheet)]
15 May 2026 9:19 AM

PROJECT	SHEET NUMBER
WY NP YELL 15(2)	E.6

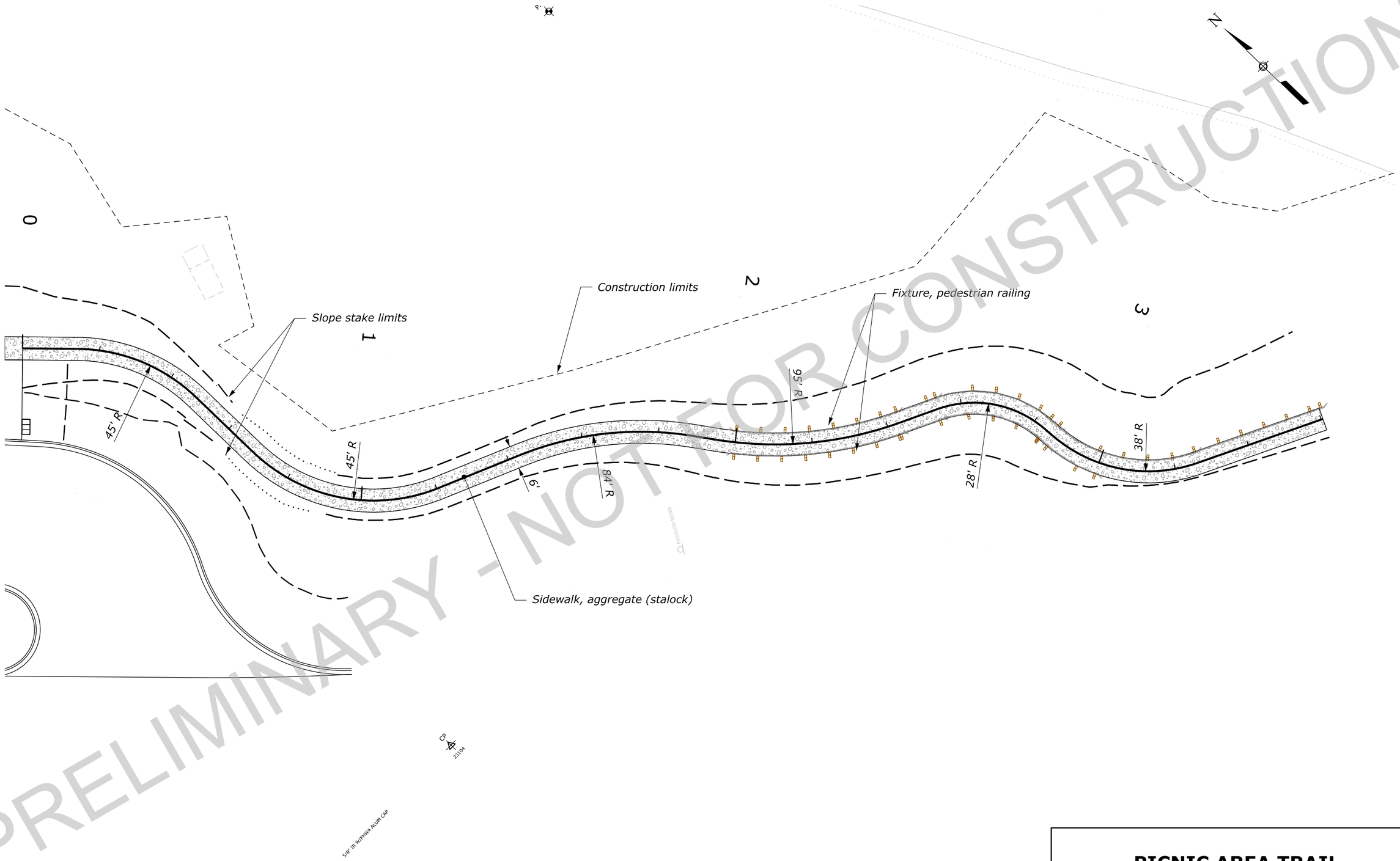

PRELIMINARY - NOT FOR CONSTRUCTION

PICNIC AREA TRAIL LAYOUT PLAN

c:\pw_work_wfl\d0696551\WPark & Gneiss Creek Plan Sheets.dgn [2-Layout Ped Path (Sheet)]
21 April 2026 8:55 AM

PROJECT	SHEET NUMBER
WY NP YELL 15(2)	E.7

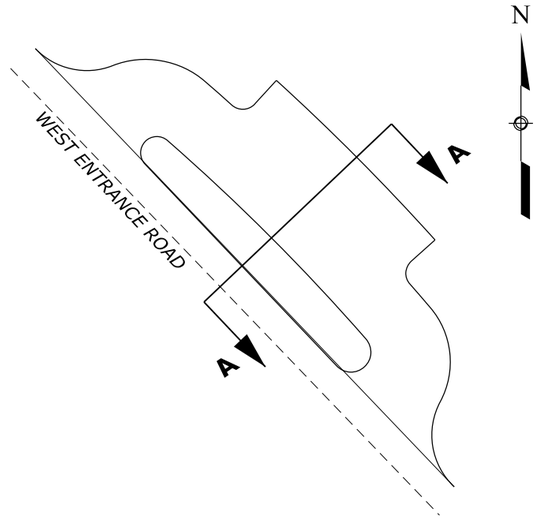

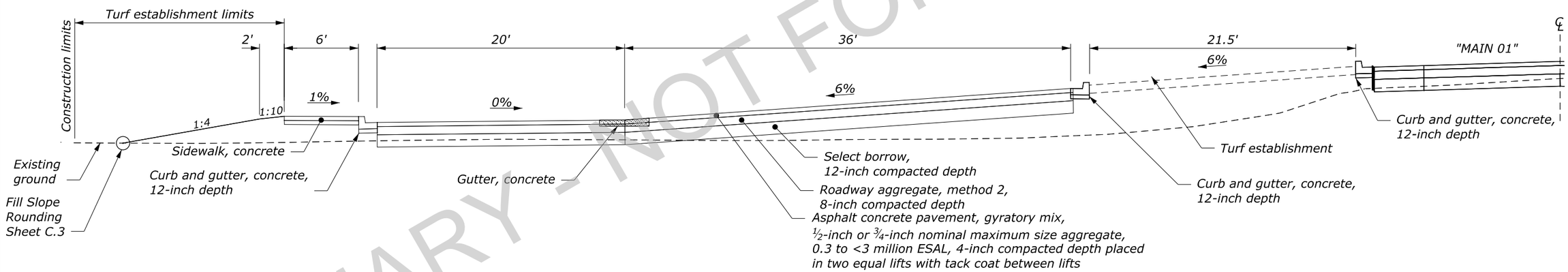

SECTION A-A

PRELIMINARY - NOT FOR CONSTRUCTION

PICNIC PARKING AREA
SECTION VIEW

c:\pw_work_wff\d0696551\Parking Section Sheets.dgn [2 - WPark Section View - Corrected Print]
21 April 2026 10:34 AM

PROJECT	SHEET NUMBER
WY NP YELL 15(2)	E.8

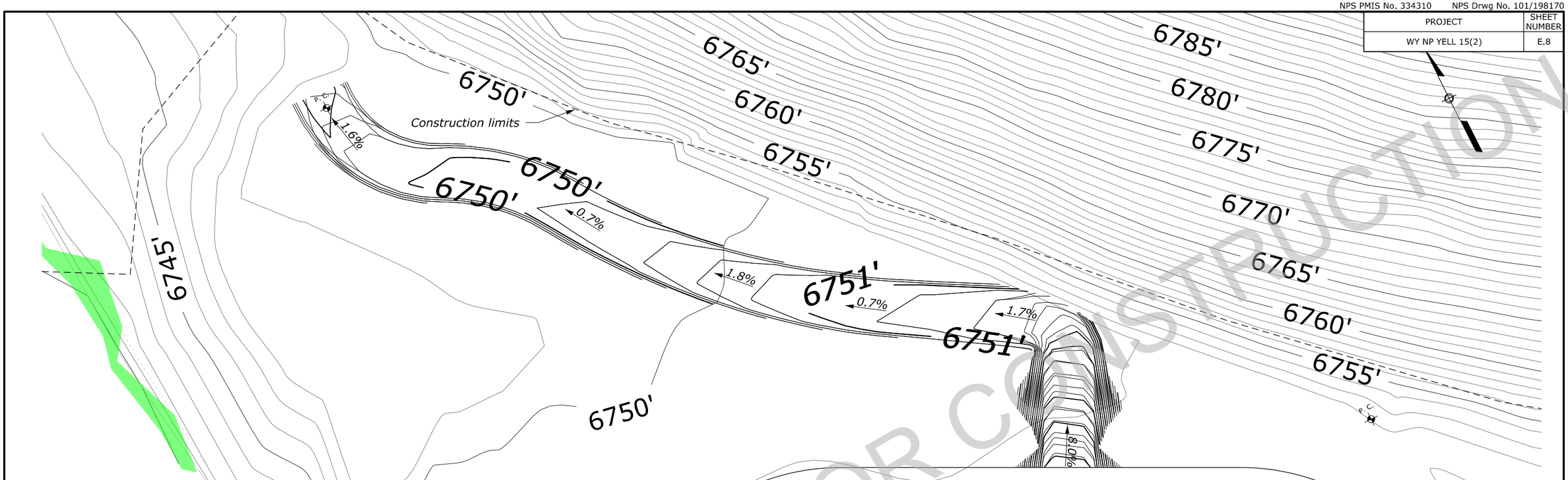

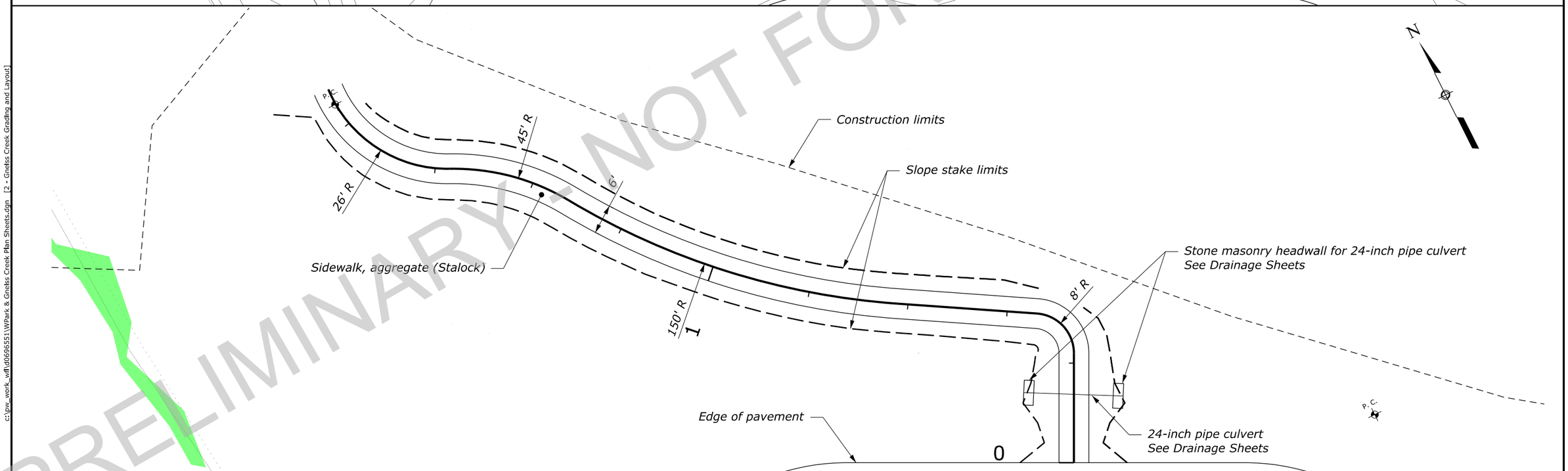

PRELIMINARY - NOT FOR CONSTRUCTION

LEGEND:

Wetland

GNEISS CREEK TRAIL
GRADING & SITE PLAN

c:\pw_work_wfl\d0696551\Wfark & Gneiss Creek Plan Sheets.dgn [2 - Gneiss Creek Grading and Layout]
21 April 2026 8:55 AM

PROJECT	SHEET NUMBER
WY NP YELL 15(2)	E.9

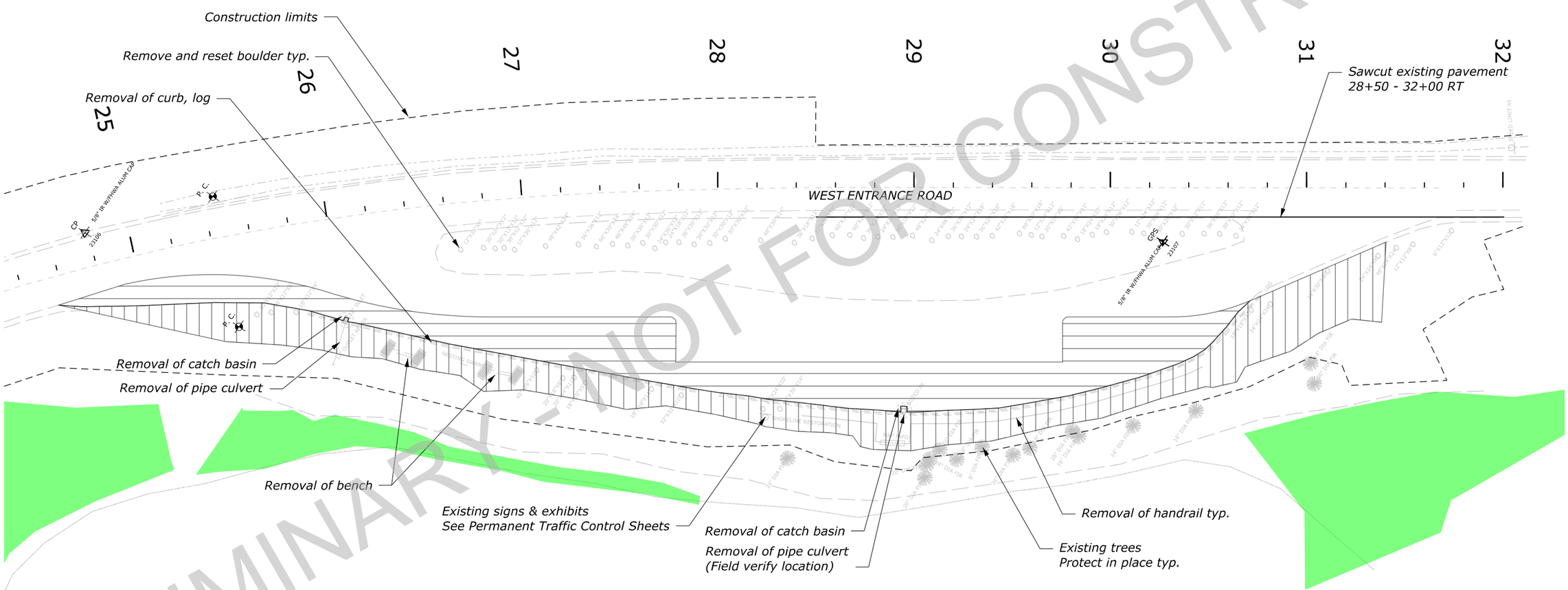

PRELIMINARY - NOT FOR CONSTRUCTION

LEGEND:

- Removal of pavement, asphalt
- Roadway excavation (surface course removal)
- Wetland

HISTORY PULLOUT
SITE PREPARATION

c:\pw_work_wfl\d0696551\EPark Plan Sheets.dgn [2 - EPark Prep (Sheet)]
15 May 2026 9:15 AM

PROJECT	SHEET NUMBER
WY NP YELL 15(2)	E.10

LEGEND:

Wetland

HISTORY PULLOUT GRADING PLAN

c:\pw_work_wfl\d0696551\EPark Plan Sheets.dgn [2 - EPark Grading [Sheet]]
21 April 2026 9:01 AM

PROJECT	SHEET NUMBER
WY NP YELL 15(2)	E.11

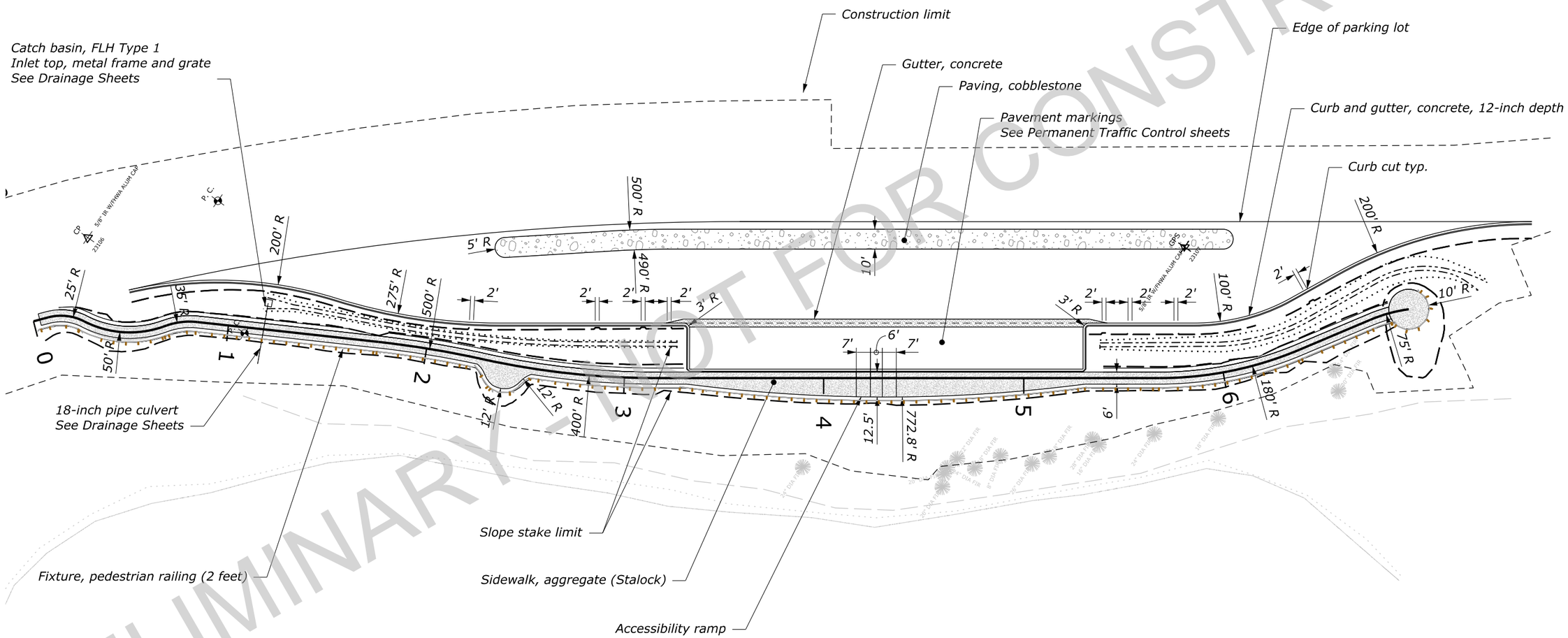

PRELIMINARY - NOT FOR CONSTRUCTION

LEGEND:

Wetland

HISTORY PULLOUT SITE PLAN

c:\pw_work_wfl\d0696551\EPark Plan Sheets.dgn [2 - EPark Layout (Sheet)]
21 April 2026 9:01 AM

PROJECT	SHEET NUMBER
WY NP YELL 15(2)	E.12

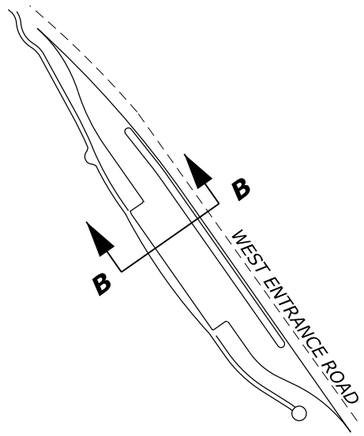

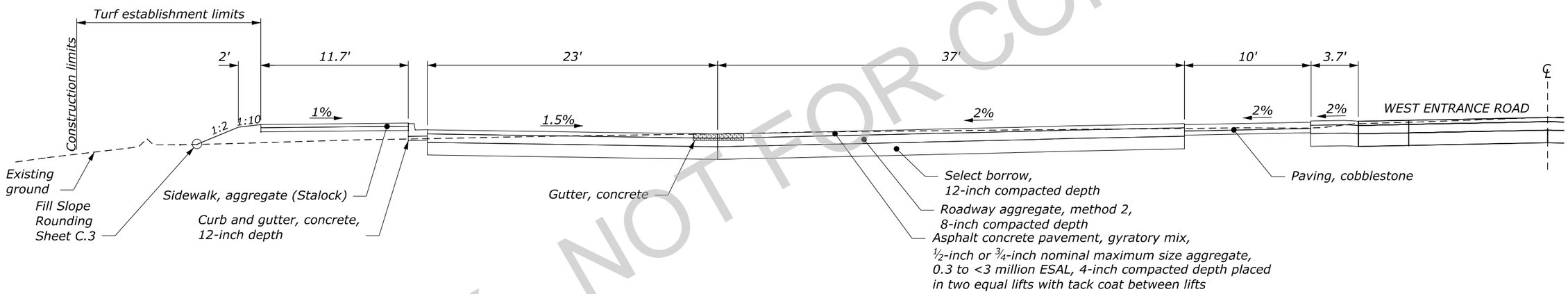

SECTION B-B

PRELIMINARY - NOT FOR CONSTRUCTION

HISTORY PULLOUT SECTION VIEW

21 April 2026 10:34 AM c:\pw_work_wfl\d0696551\Parking Section Sheets.dgn [2 - East Park Section - Corrected Print]

PROJECT	SHEET NUMBER
WY NP YELL 15(2)	E.13

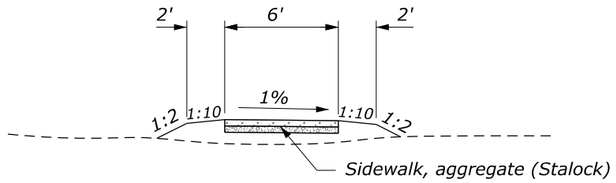

PICNIC PARKING TRAIL
0+00 [1] to 2+00

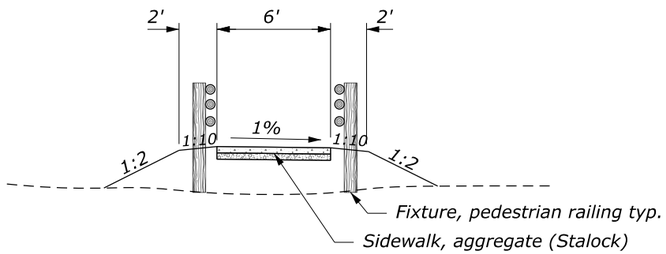

PICNIC PARKING TRAIL
2+00 to 3+00

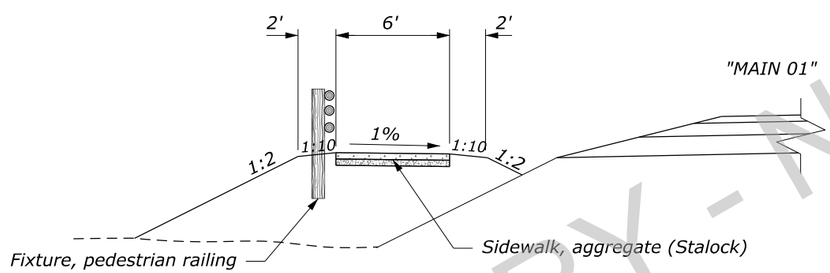

PICNIC PARKING TRAIL
3+00 to 3+60.48 [2]

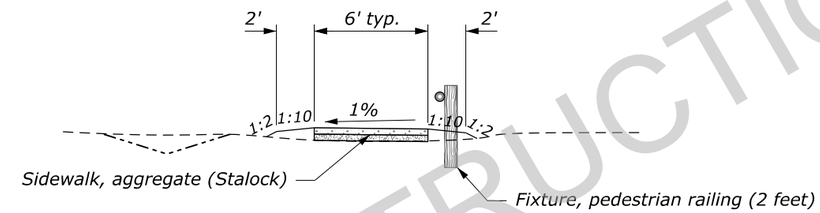

EAST PARKING TRAIL
0+00 [3] to 3+31.84
5+31.84 to 6+89.20

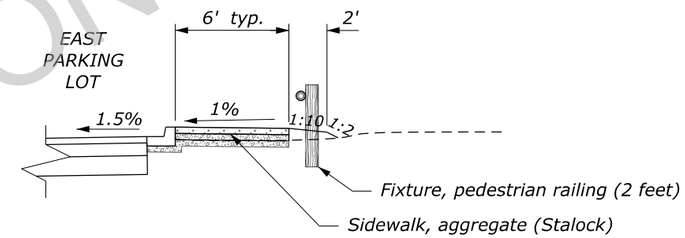

EAST PARKING TRAIL
3+31.84 to 5+31.84

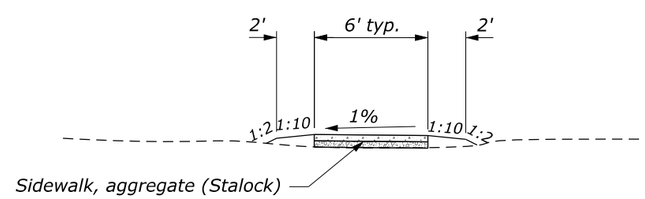

GNEISS CREEK TRAIL
0+00 [4] to 1+87.98

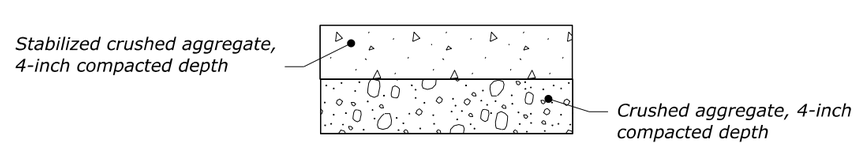

SIDEWALK, AGGREGATE (STALOCK)
MATERIAL SECTION

NOTE:
1. Construct variations of slopes and sidewalk widths, according to the Physical Data (SCR 102.02A).

FOOTNOTE:
[1] Edge of Pad, Concrete in Picnic Parking.
[2] Edge of Sidewalk, concrete on mainline.
[3] End of Curb, Stone 12" depth on mainline
[4] Tie into mainline turnout.

TRAIL TYPICAL SECTIONS

PRELIMINARY - NOT FOR CONSTRUCTION

c:\pw_work_wfl\d0626714\yell15-2_typ.dgn [Trail Typicals]
15 May 2026 12:45 PM

PROJECT	SHEET NUMBER
WY NP YELL 15(2)	F.2

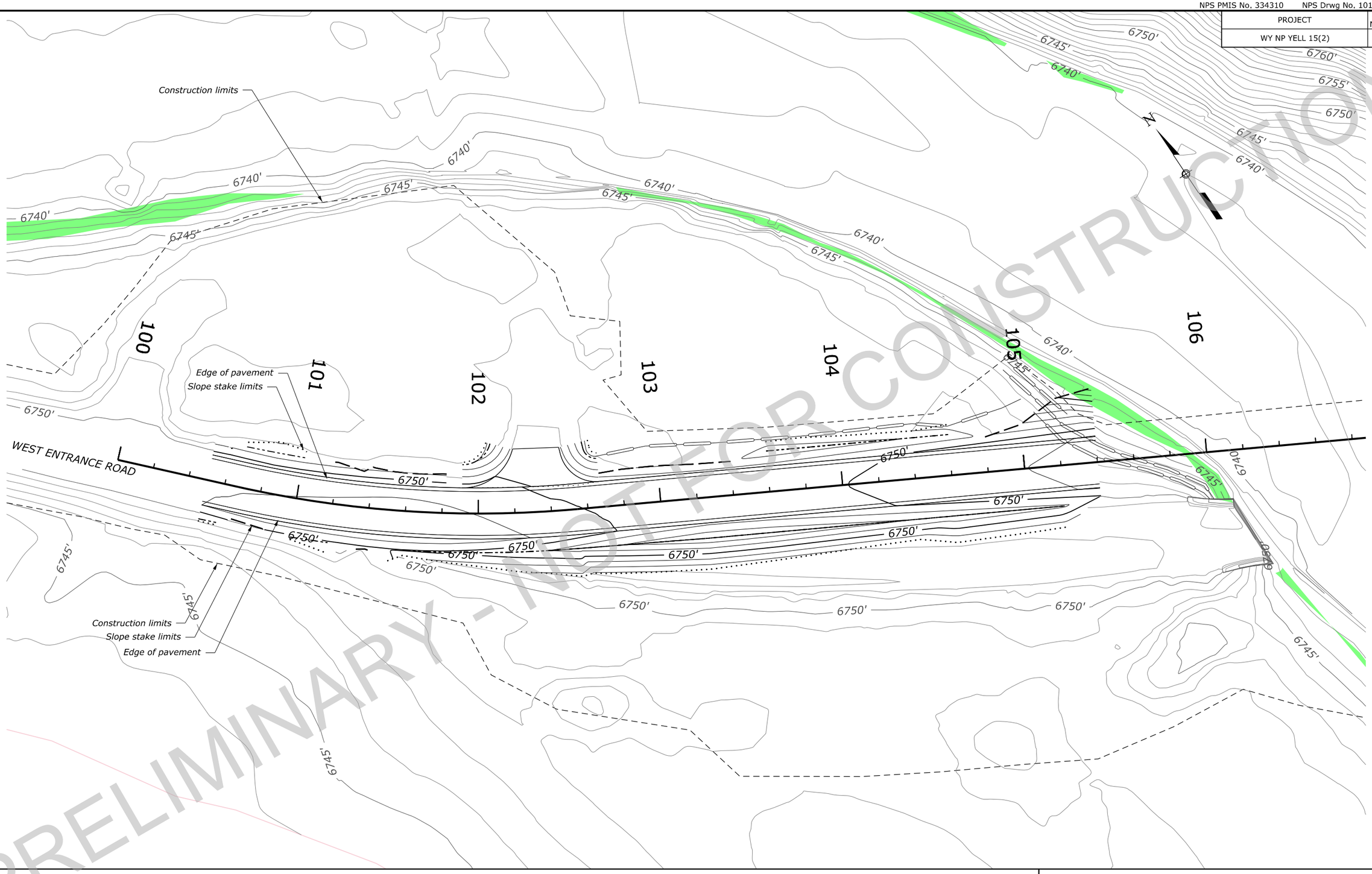

PRELIMINARY - NOT FOR CONSTRUCTION

LEGEND:

- *Wetland*
- *Soil erosion control, fiber roll*

NOTE:

1. Apply temporary turf establishment to finished slopes.

EROSION CONTROL PLANS
TEMPORARY ALIGNMENT

c:\pw_work_wfl\d0713921\yell-15_2_EC.dgn [2 - BL - Temp All ESC Plan 1]
15 May 2026 10:44 AM

PROJECT	SHEET NUMBER
WY NP YELL 15(2)	F.3

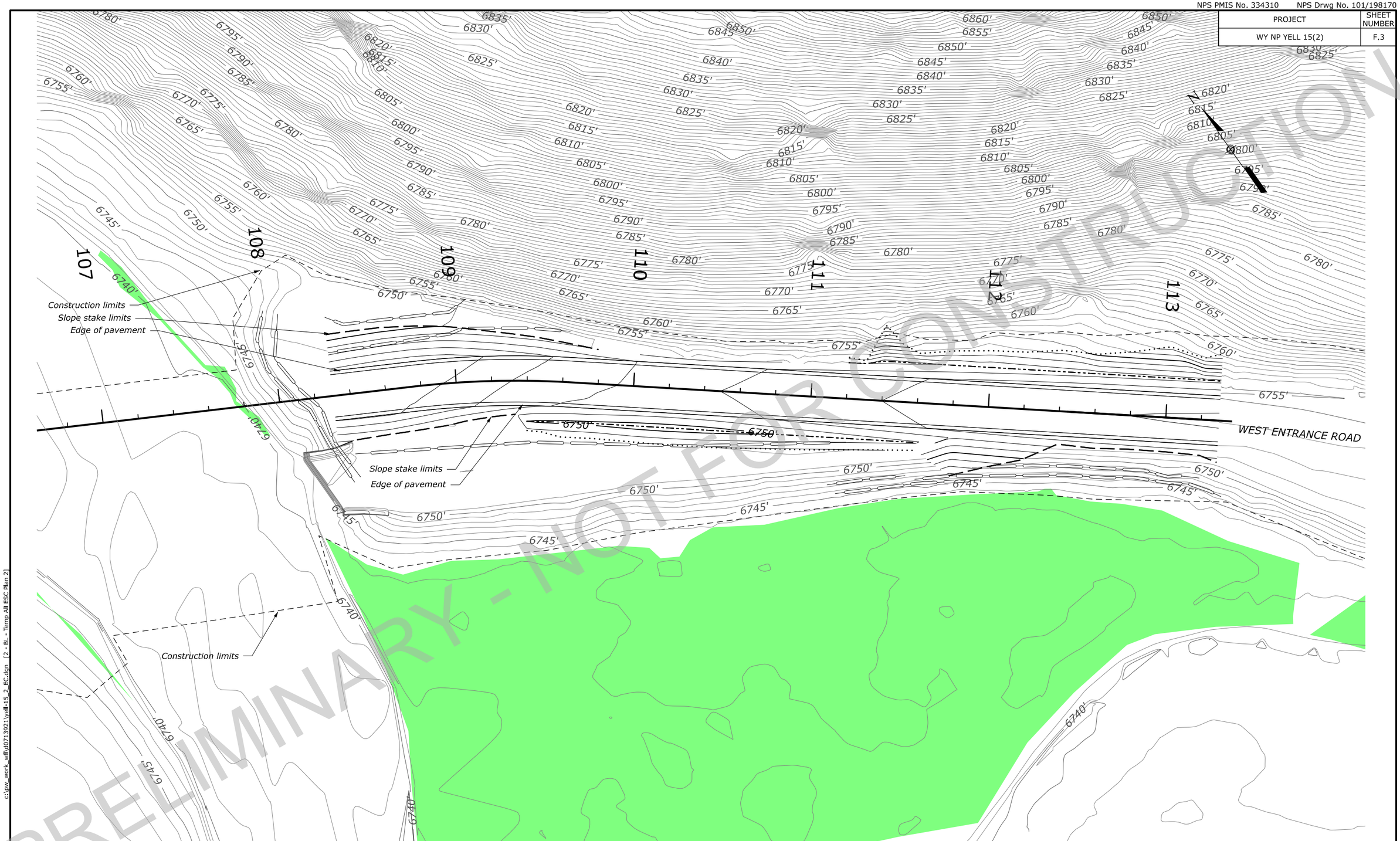

PRELIMINARY - NOT FOR CONSTRUCTION

LEGEND:

- *Wetland*
- *Soil erosion control, fiber roll*

NOTE:

1. Apply temporary turf establishment to finished slopes.

EROSION CONTROL PLANS
TEMPORARY ALIGNMENT

c:\pw_work_wfl\d0713921\yell-15_2_EC.dgn [2 - BL - Temp All ESC Plan 2]
15 May 2026 10:44 AM

PROJECT	SHEET NUMBER
WY NP YELL 15(2)	F.4

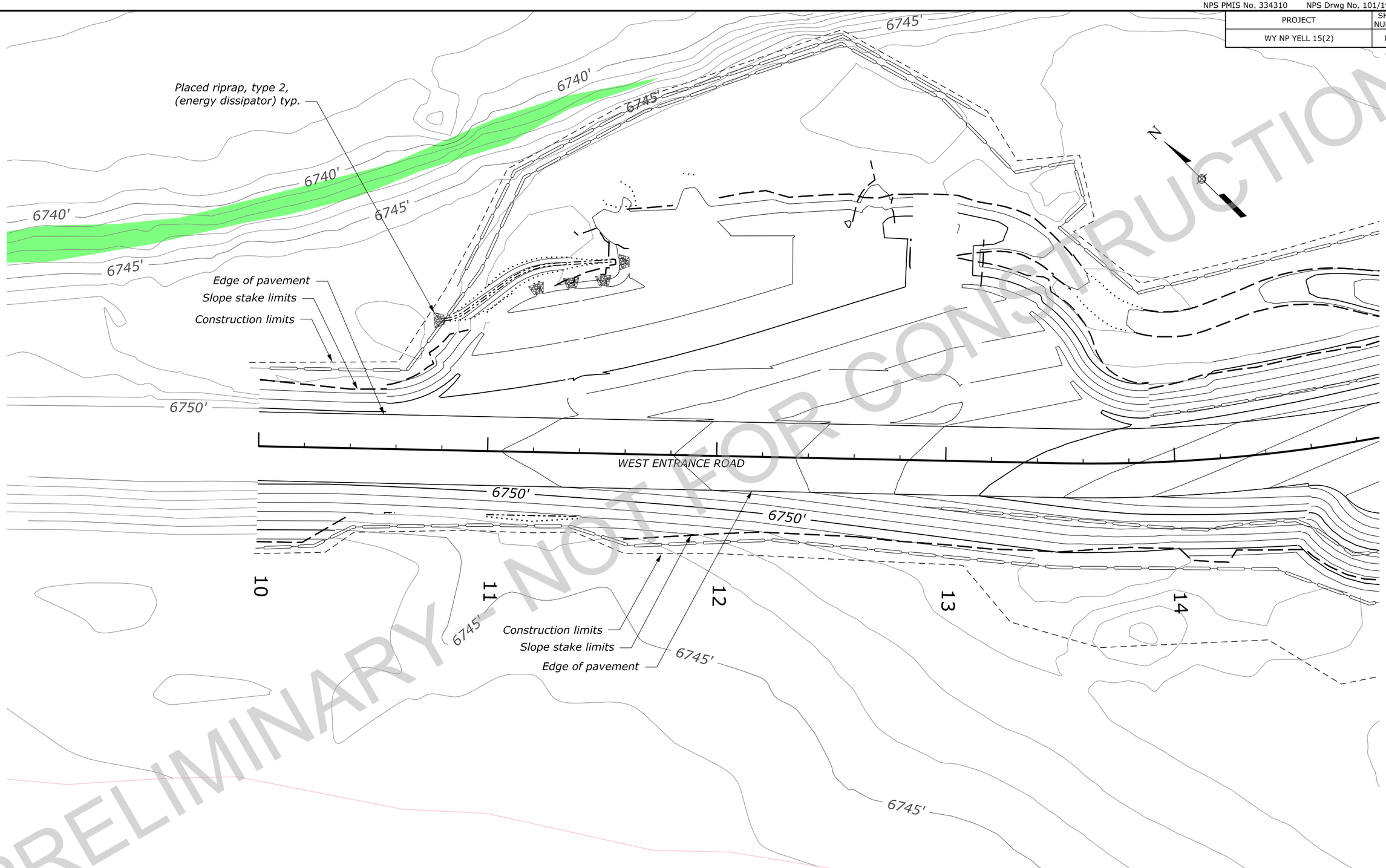

PRELIMINARY - NOT FOR CONSTRUCTION

LEGEND:

- Wetland
- Soil erosion control, fiber roll

EROSION CONTROL PLANS

c:\pw_work_wfl\d0713921\yell-15_2_EC.dgn [2 - ALL_MAIN_01 - ESC Plan 1]
15 May 2026 10:44 AM

PROJECT	SHEET NUMBER
WY NP YELL 15(2)	F.5

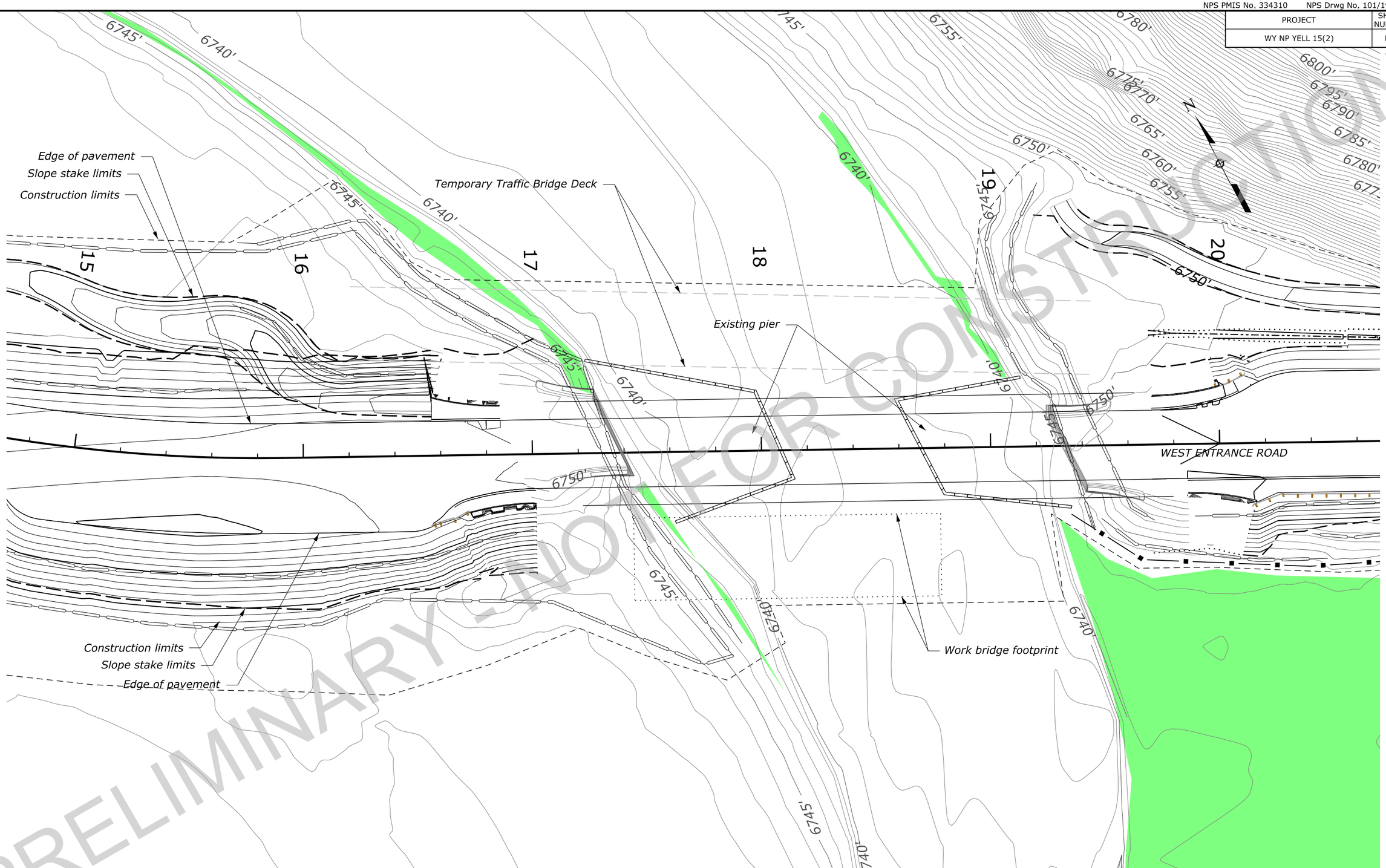

PRELIMINARY - NOT FOR CONSTRUCTION

LEGEND:

- Wetland
- Soil erosion control, fiber roll
- Soil erosion control, silt fence
- Soil erosion control, temporary stream diversion

EROSION CONTROL PLANS

c:\pw_work_wfl\d0713921\yell-15_2_EC.dgn [2 - ALL_MAIN_01 - ESC Plan 2]
15 May 2026 10:44 AM

PROJECT	SHEET NUMBER
WY NP YELL 15(2)	F.6

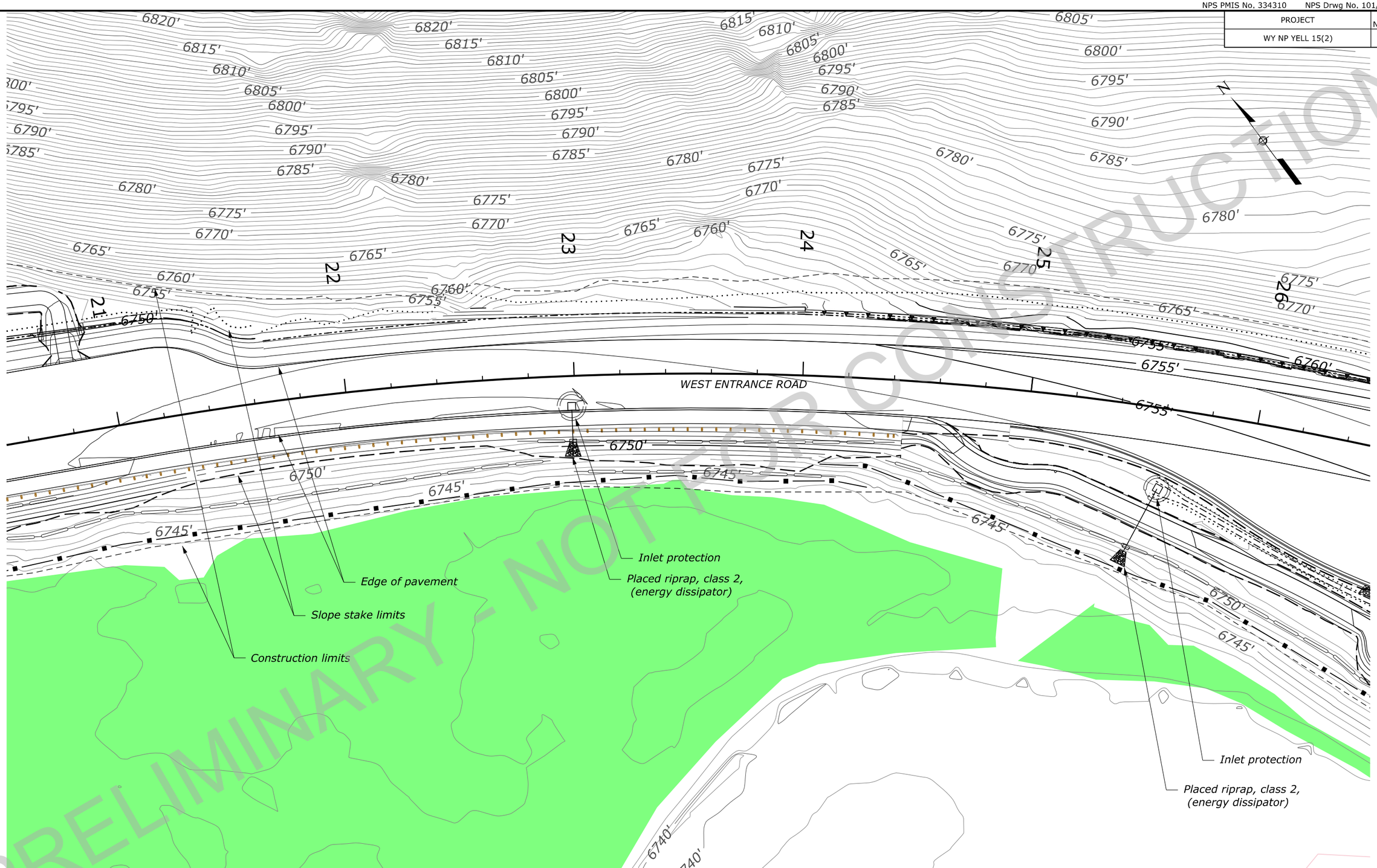

PRELIMINARY - NOT FOR CONSTRUCTION

LEGEND:

- Wetland
- Soil erosion control, fiber roll
- Soil erosion control, silt fence

EROSION CONTROL PLANS

c:\pw_work_wfl\d0713921\ycdl-15_2_EC.dgn [2 - ALI_MAIN_01 - ESC Plan 3]
15 May 2026 10:44 AM

PROJECT	SHEET NUMBER
WY NP YELL 15(2)	F.7

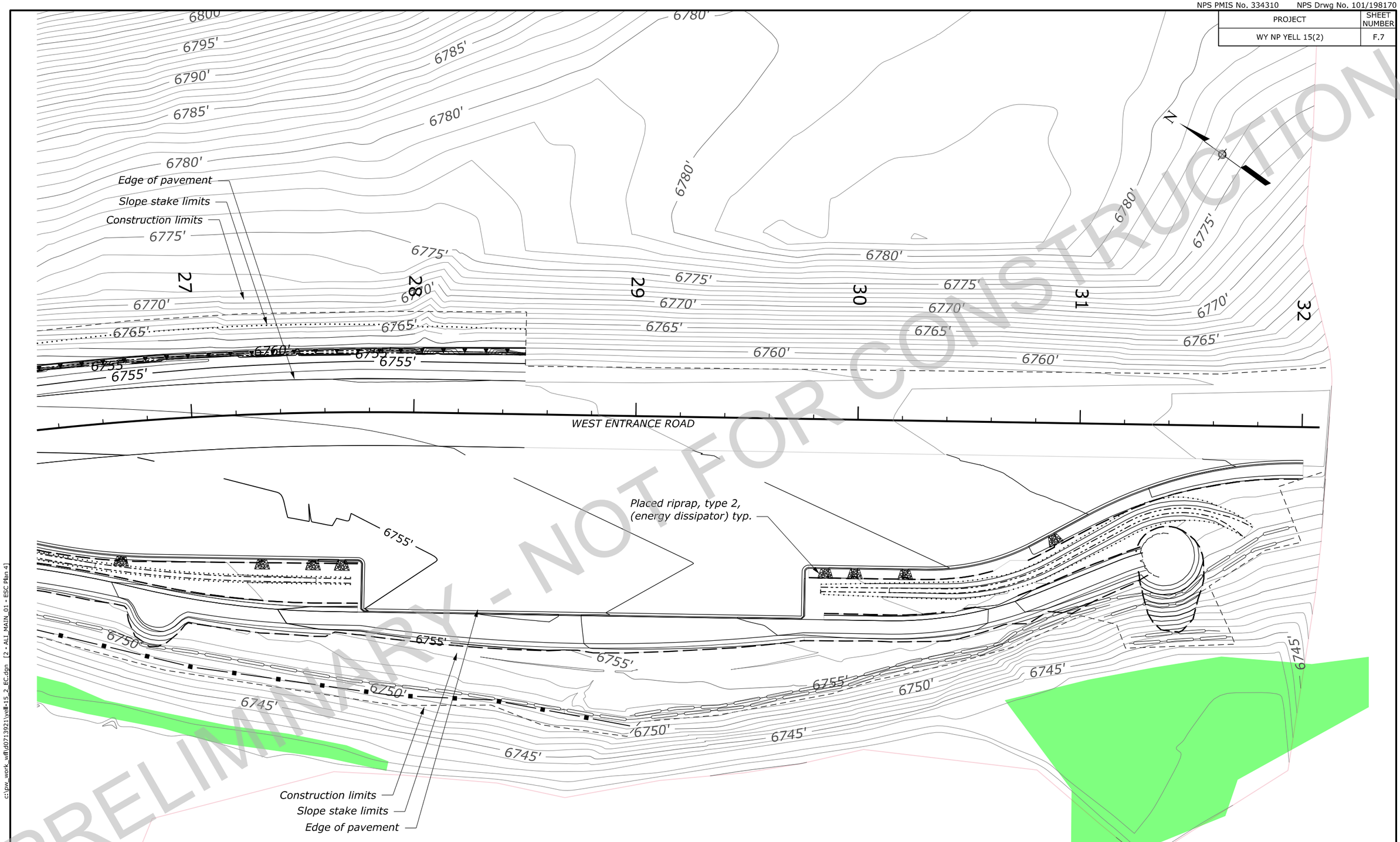

PRELIMINARY - NOT FOR CONSTRUCTION

LEGEND:

- *Wetland*
- *Soil erosion control, fiber roll*

EROSION CONTROL PLANS

c:\pw_work_wfl\d0713921\ydll-15_2_EC.dgn [2 - ALL_MAIN_01 - ESC Plan 4]
15 May 2026 10:44 AM

PROJECT	SHEET NUMBER
WY NP YELL 15(2)	F.8

NOTE:

1. Alternate preassembled silt fence options will be allowed as long as specified dimensions are satisfied. Follow manufacturer's recommendations for installation procedures. All types must ensure silt fence remains attached to, and does not slide down, supporting posts.
2. Install silt fence to follow the ground contours as closely as possible.
3. Curve ends of silt fence upgrade to prevent water from running around the ends.
4. 10-foot maximum spacing with silt fence reinforcement. 6-foot maximum spacing without silt fence reinforcement.

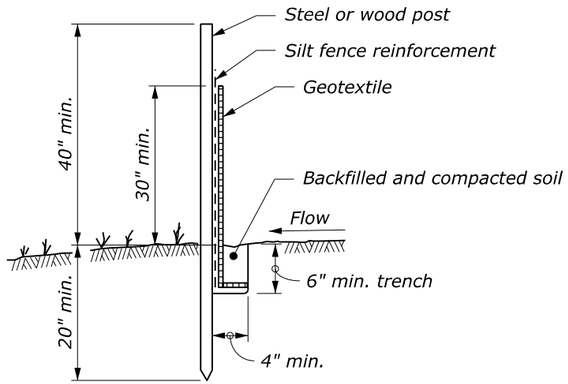

POST AND GEOTEXTILE INSTALLATION DETAIL

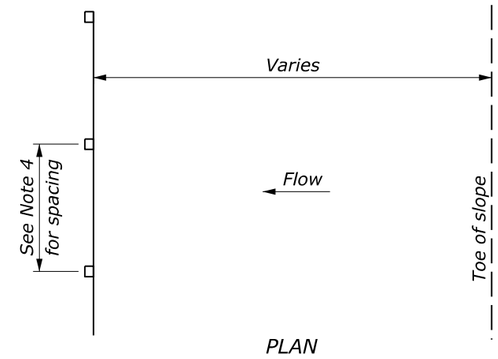

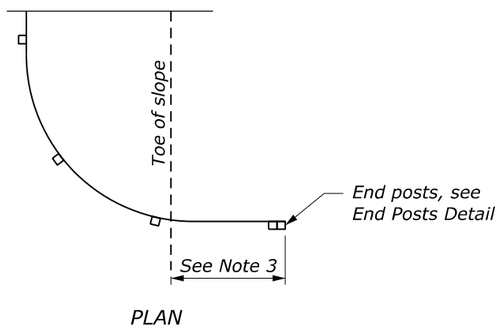

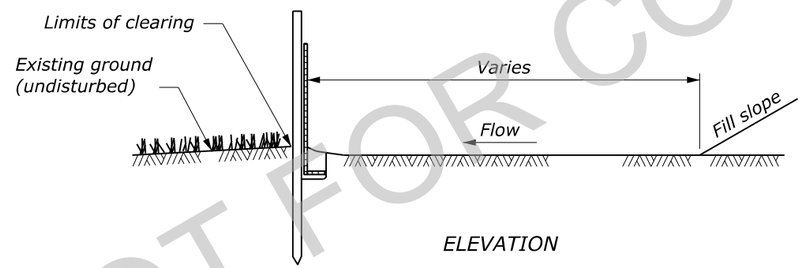

SILT FENCE INSTALLATION AT TOE OF FILL

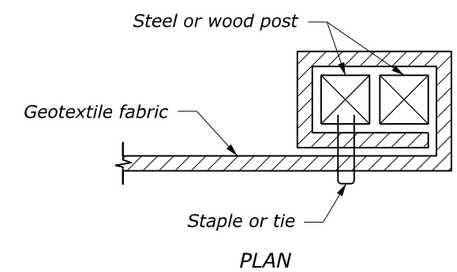

END POSTS DETAIL

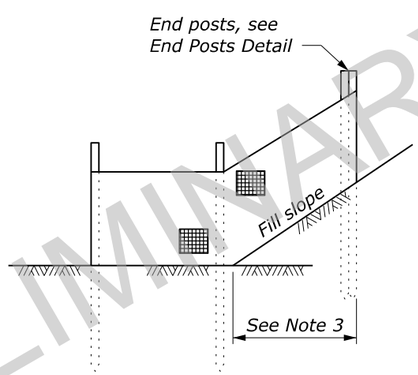

END DETAIL

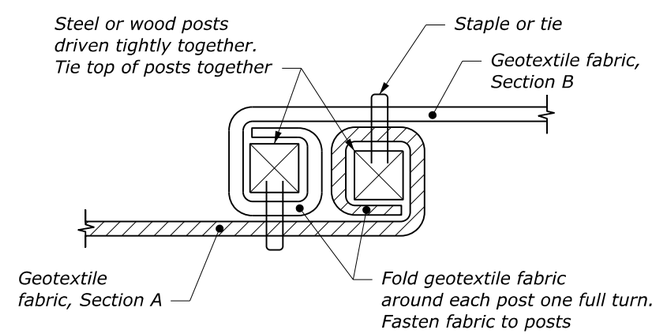

POSTS AT JOINTS

NO SCALE

U.S. DEPARTMENT OF TRANSPORTATION, FHWA OFFICE OF FEDERAL LANDS HIGHWAY	WFL STANDARD W157-1
SILT FENCE	SPECIFICATION FP-24, FP-14
	APPROVED FOR USE 10/2016

PRELIMINARY - NOT FOR CONSTRUCTION

c:\pw_work_wfl\d0713921\W157-1.dgn [Std W157-1]
15 May 2026 10:46 AM

PROJECT	SHEET NUMBER
WY NP YELL 15(2)	

NOTE:

1. *Inlet protection device (type E) may consist of continuous filter tubing filled with gravel or other prefabricated filter material. Install device according to manufacturer's recommendations.*
2. *Vary dimensions to fit field conditions.*

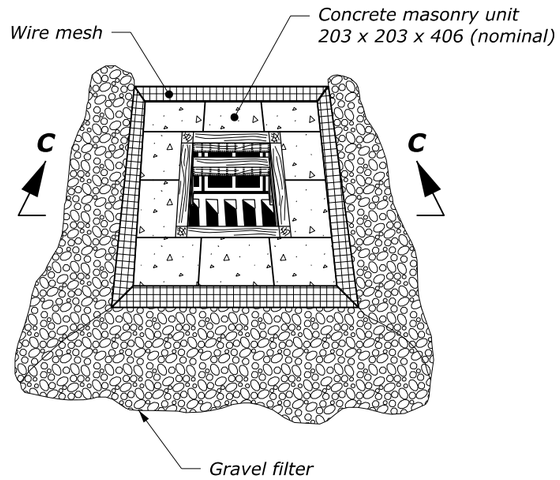

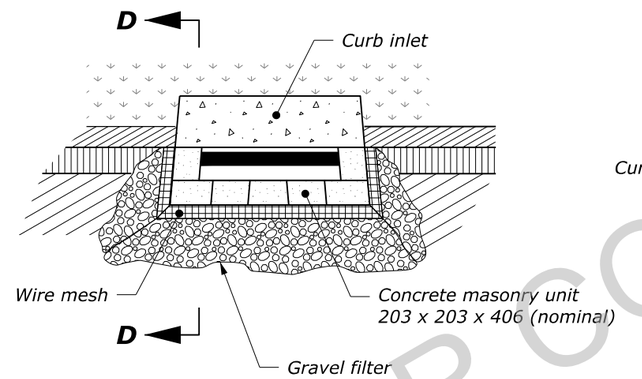

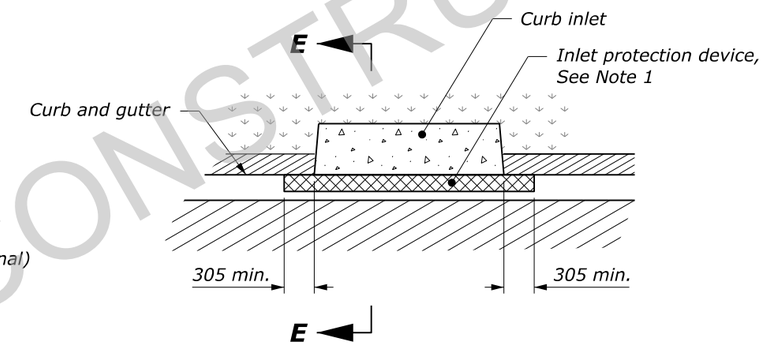

PLAN

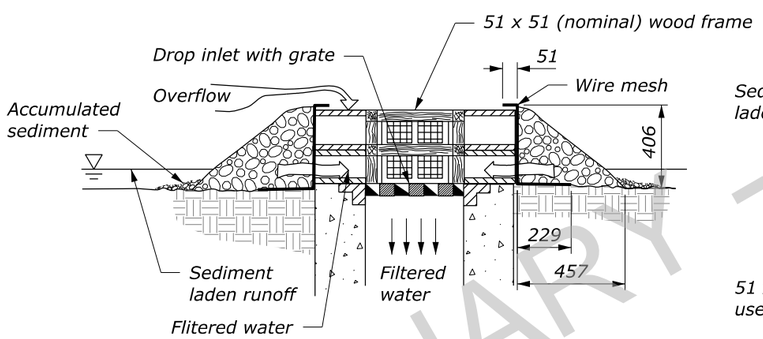

SECTION C-C

BLOCK AND GRAVEL
DROP INLET PROTECTION (TYPE D1)

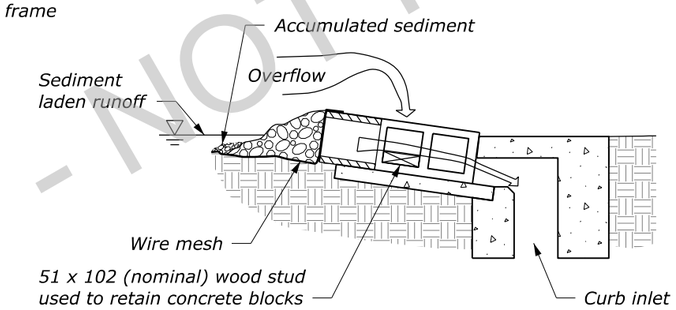

SECTION D-D

BLOCK AND GRAVEL
CURB INLET PROTECTION (TYPE D2)

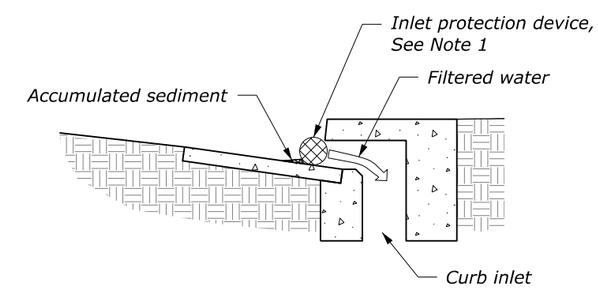

SECTION E-E

INLET PROTECTION DEVICE
CURB INLET PROTECTION (TYPE E)

*This drawing contains **Metric** units of measure. Dimensions without units are millimeters.*

NO SCALE

U.S. DEPARTMENT OF TRANSPORTATION, FHWA
OFFICE OF FEDERAL LANDS HIGHWAY

TEMPORARY INLET PROTECTION
Sheet 2 of 2

WFL STANDARD
WM157-2

SPECIFICATION
FP-24, FP-14

APPROVED FOR USE
7/2016

PRELIMINARY - NOT FOR CONSTRUCTION

c:\pw_work\wfl\d0713921\W157-2.dgn [Std WM157-2b]
15 May 2026 10:46 AM

PROJECT	SHEET NUMBER
WY NP YELL 15(2)	F.10

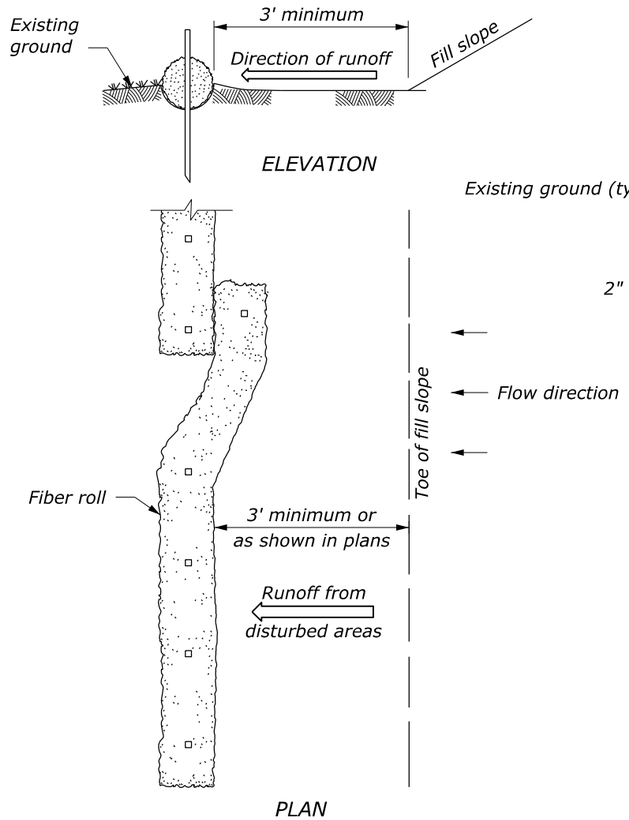

INSTALLATION BEYOND TOE OF SLOPE

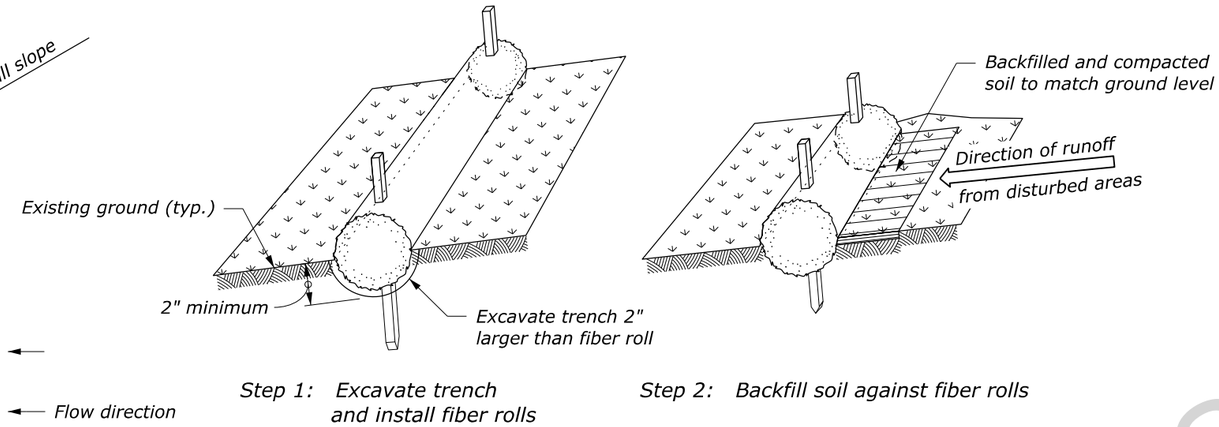

PROPERLY STAKED AND ENTRENCHED FIBER ROLL

FIBER ROLL SPACING	
Slope	Spacing (FT)
1:4 or flatter	40
1:3	30
1:2	20
1:1	10

STAKES REQUIRED	
Fiber roll length (FT)	Stakes required for each roll
25	8
20	6
12	4

NOTE:

1. Drive stakes at each end and at 4-foot spacing until fiber roll is secure to slope. Live stakes may be used for permanent installations. Do not crush fiber roll while staking.
2. Overlap fiber rolls 12-inch minimum. Drive stakes at 6-inches from fiber roll end angles towards the adjacent fiber roll and space stakes at 4-foot maximum.

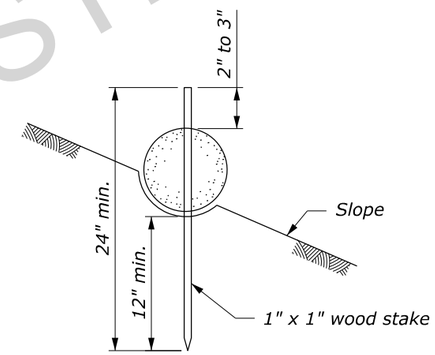

FIBER ROLL STAKING DETAIL

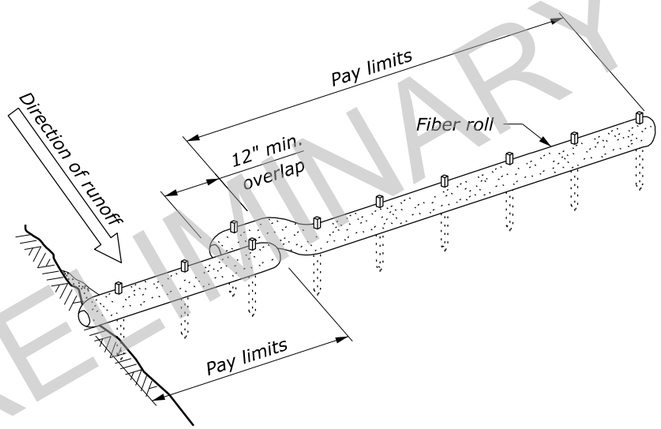

ALTERNATE FIBER ROLL JOINT DETAIL SLOPE PROTECTION INSTALLATION

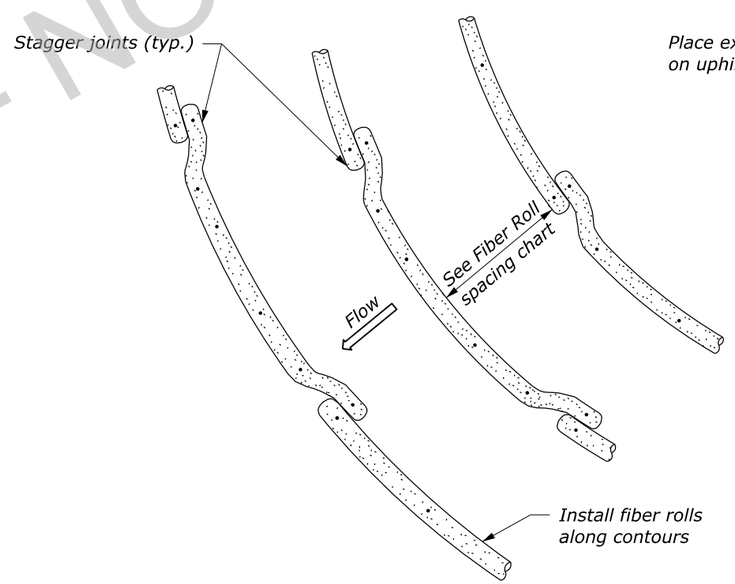

INSTALLATION ALONG SLOPES

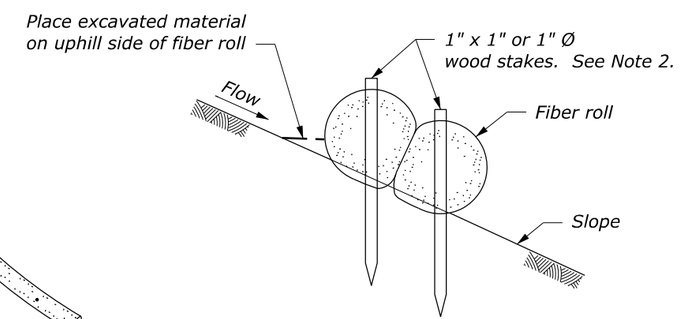

FIBER ROLL LAPPING DETAIL

NO SCALE

U.S. DEPARTMENT OF TRANSPORTATION, FHWA OFFICE OF FEDERAL LANDS HIGHWAY	WFL STANDARD W157-21
FIBER ROLL	SPECIFICATION FP-24, FP-14
	APPROVED FOR USE 7/2016

PRELIMINARY - NOT FOR CONSTRUCTION

c:\pw_work_wfl\d0713921\W157-21.dgn [Std W157-21]
15 May 2026 10:46 AM

Note: The quantities shown hereon are approximate and are subject to field adjustments.

TABULATION OF DRAINAGE QUANTITIES

PROJECT	SHEET NUMBER
WY NP YELL 15(2)	G.1

PAY ITEM NUMBER			20301 -0500	20301 -0500	20301 -1900	25101 -0300	60201 -0600	60201 -0800	60404 -1000	60409 -0050	62011 -0300	62011 -0500					
Station	ESTIMATED MAXIMUM COVER	STRUCTURAL EXCAVATION	REMOVAL OF CATCH BASIN	REMOVAL OF CATCH BASIN	REMOVAL OF PIPE CULVERT	PLACED RIPRAP, CLASS 3	18-INCH PIPE CULVERT	24-INCH PIPE CULVERT	CATCH BASIN, FLH TYPE 1	INLET TOP, METAL FRAME AND GRATE	STONE MASONRY HEADWALL FOR 18-INCH PIPE CULVERT	STONE MASONRY HEADWALL FOR 24-INCH PIPE CULVERT	SKEW ANGLE	Allowable Pipe Material (See key below)	BEVELS 1V:nH	BEVELS 1V:nH	REMARKS See below for numbered notes
	FEET	CUYD	EACH	EACH	EACH	CUYD	LNFT	LNFT	EACH	EACH	EACH	EACH			Lt	Rt	
Picnic Parking Area				1													Cistern
History Pullout				2	2												
West Abutment Scour Protection						530											
East Abutment Scour Protection						530											
Gneiss Creek Trail 0+14								20				2		GS			
"MAIN 01" 22+98							14		1	1	1			GS			
History Pullout Trail 1+17							28		1	1	1			GS			
PROJECT TOTAL		**0**	**0**	**3**	**2**	**1060**	**42**	**20**	**2**	**2**	**2**	**2**					

Allowable Pipe Material

A	Aluminum
AS	Aluminized steel
C	Concrete
GS	Galvanized steel
P	Plastic
(blank)	Any appropriate material
x/__	Any appropriate material except __

PRELIMINARY - NOT FOR CONSTRUCTION

c:\pw_work_wfl\d0713922\[G.1 Drainage24-202512.xlsx]Sheet
21-Apr-2026 4:40 PM

PROJECT	SHEET NUMBER
WY NP YELL 15(2)	G.2

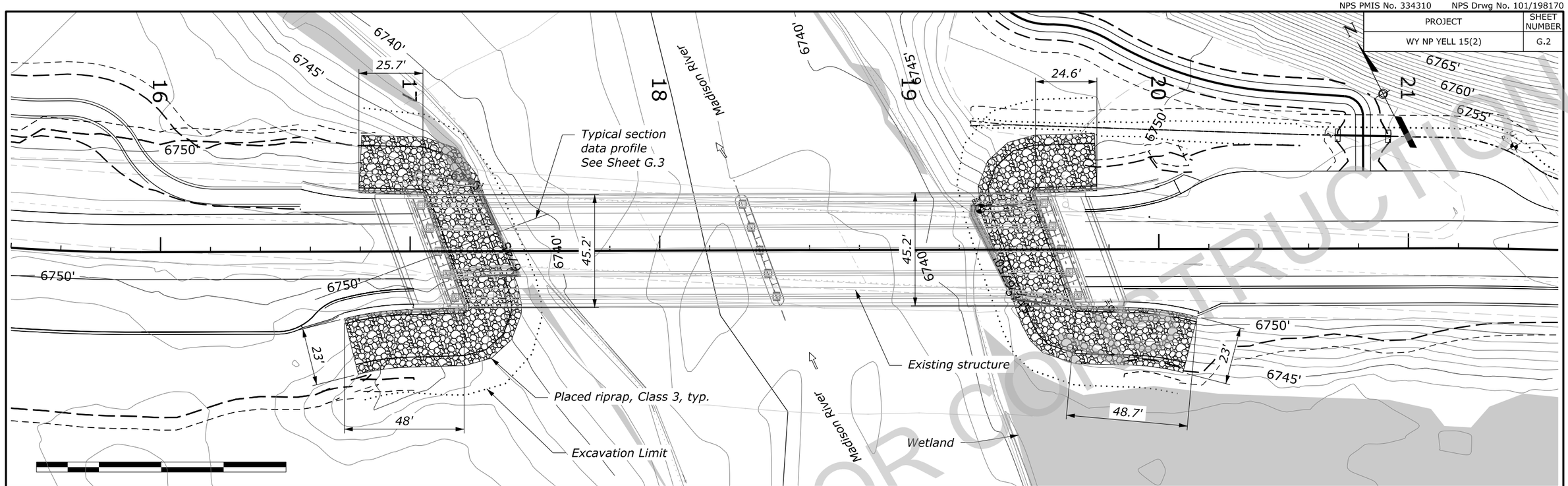

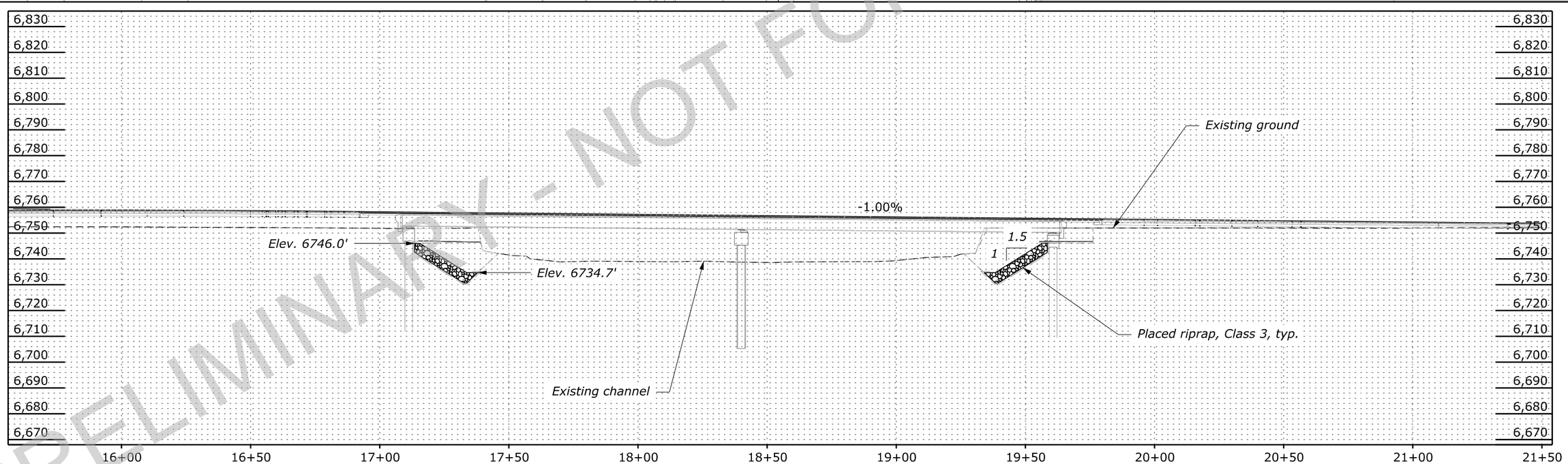

NOTE:

Place Geotextile filter, class 1, non-woven, according to Section 251.

MADISON RIVER BRIDGE RIPRAP LAYOUT

PRELIMINARY - NOT FOR CONSTRUCTION

c:\pw_work\wflt\d0626760\yell_15_2_HY_70pct_SHEETS_IntMR-2D.dgn [(SHEET_G.2)_PLAN_PROFILE_RIPRAP]
25 March 2026 5:55 PM

PROJECT	SHEET NUMBER
WY NP YELL 15(2)	G.3

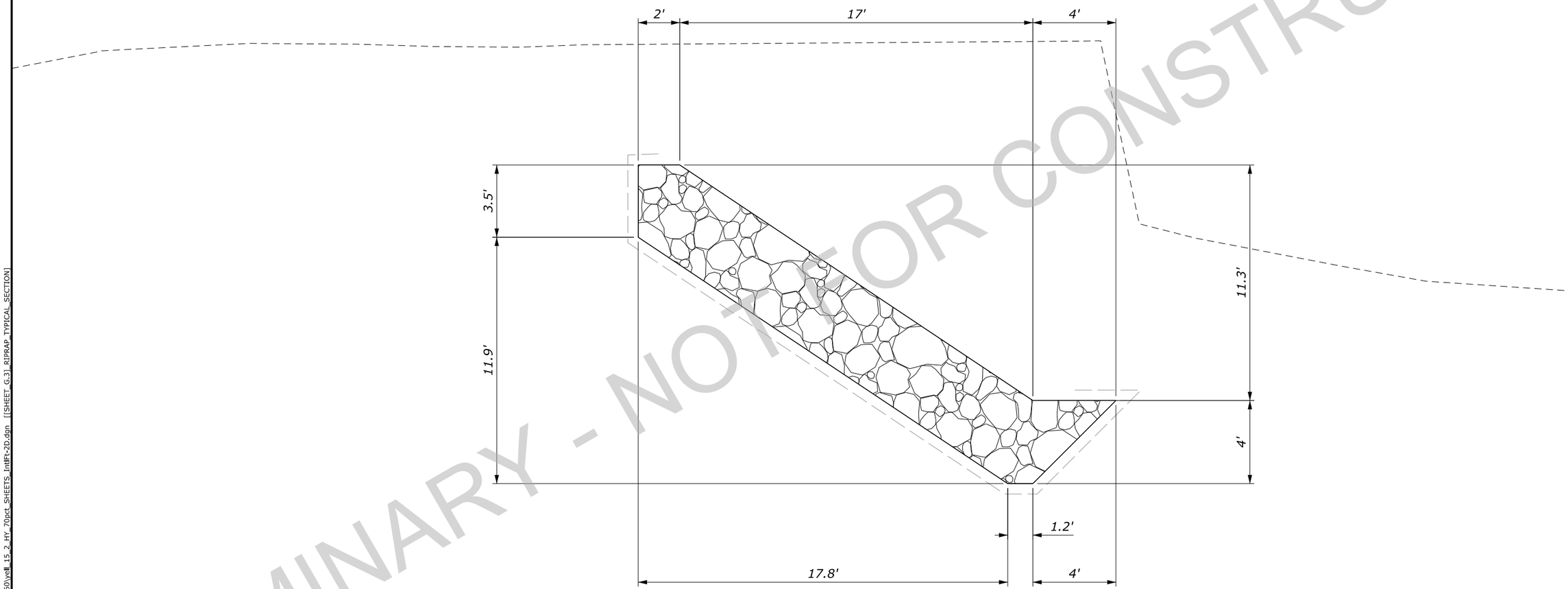

PRELIMINARY - NOT FOR CONSTRUCTION

RIPRAP TYPICAL SECTION

25 March 2026 5:37 PM c:\pw_work_wfl\d0626760\yell_15_2_HY_70pct_SHEETS_IntlFt-2D.dgn [{SHEET_G.3}_RIPRAP_TYPICAL_SECTION]

PROJECT	SHEET NUMBER
WY NP YELL 15(2)	G.4

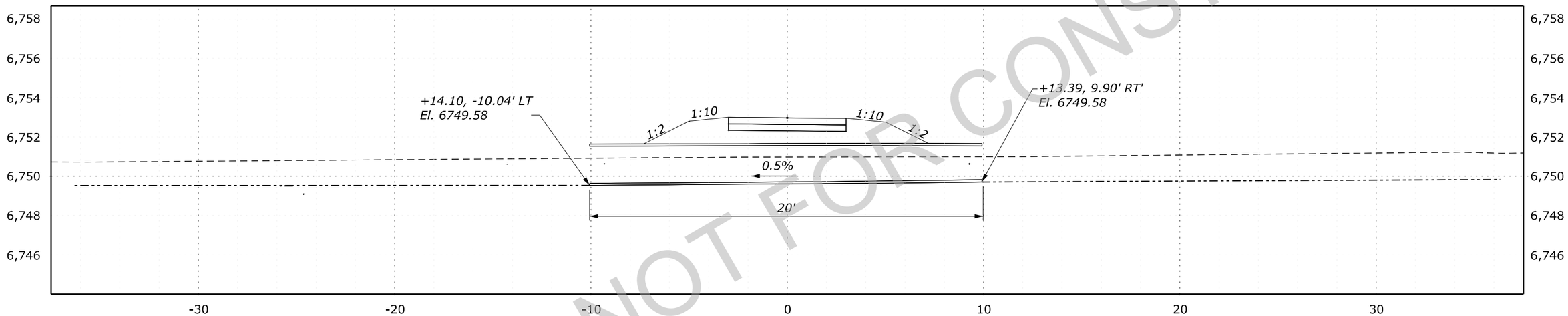

GNEISS CREEK TRAIL +13.74
24-INCH PIPE CULVERT

PRELIMINARY - NOT FOR CONSTRUCTION

c:\pw_work_wfl\d0713922\Culvert XS.dgn [2 - Gneiss Culvert]
22 April 2026 9:40 AM

GNEISS CREEK TRAIL CULVERT
+13.74

PROJECT	SHEET NUMBER
WY NP YELL 15(2)	G.5

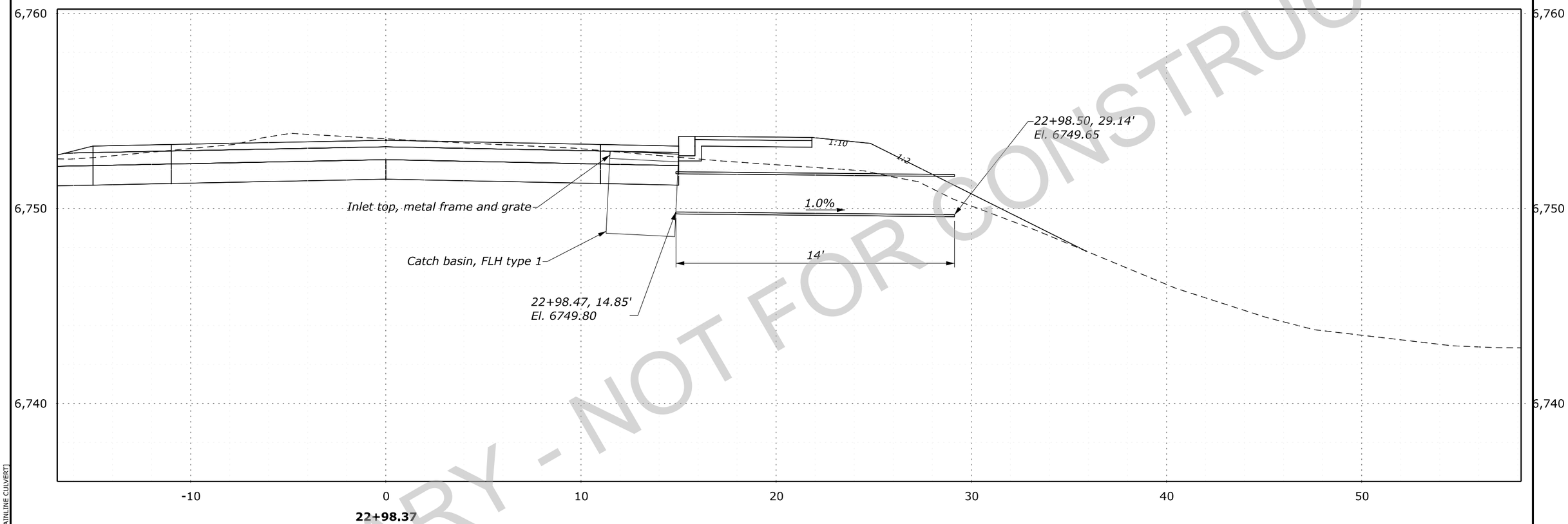

PRELIMINARY - NOT FOR CONSTRUCTION

MAIN 01 CULVERT
22+98.37

c:\pw_work\wfl\d0713922\Culvert XS.dgn [MAINLINE CULVERT]
22 April 2026 9:40 AM

PROJECT	SHEET NUMBER
WY NP YELL 15(2)	G.6

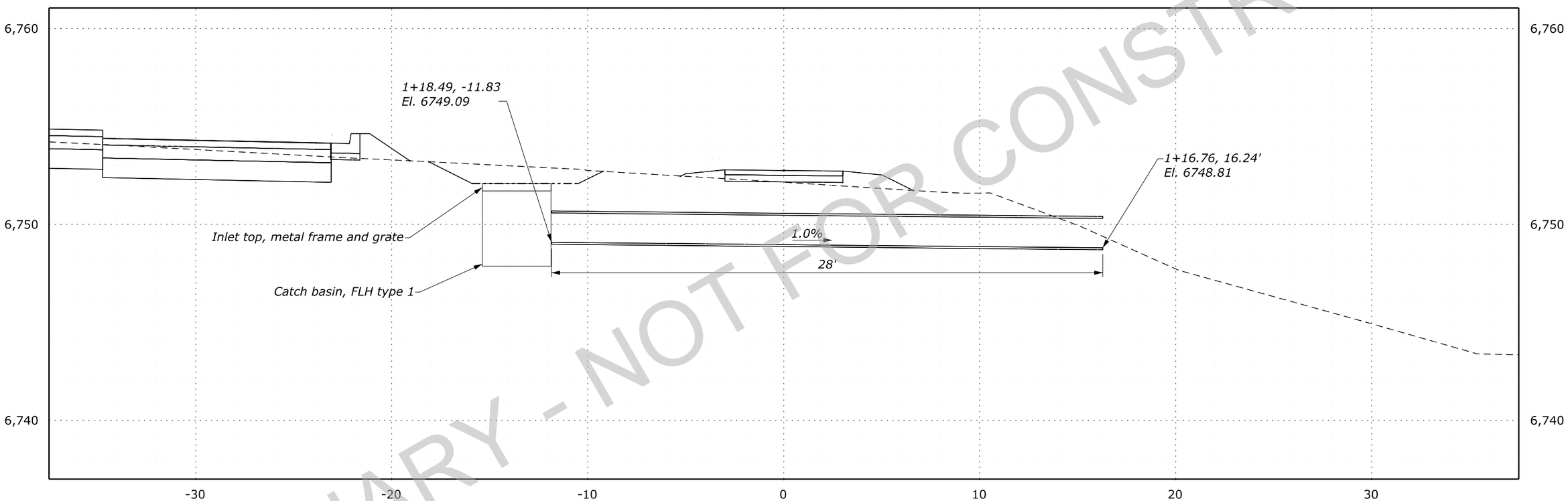

EAST PARKING TRAIL 1+17.77
18-INCH PIPE CULVERT

PRELIMINARY - NOT FOR CONSTRUCTION

22 April 2026 9:40 AM c:\pw_work_wff\d0713922\Culvert XS.dgn [2 - East Parking Culvert]

HISTORY PULLOUT TRAIL CULVERT
1+17.77

PROJECT	SHEET NUMBER
WY NP YELL 15(2)	G.7

ROUND PIPE							
D (in)	A (ft)	B (ft)	H (ft)	L (ft)	SINGLE PIPE (INFORMATION ONLY)		
					Stone (cuyd)	Concrete (cuyd)	Bed Course (cuyd)
18"	1'-0"	1'-6"	3'-6"	5'-0"	0.72	0.40	0.46
24"	1'-4"	1'-10"	4'-4"	6'-4"	1.41	0.76	0.66
30"	1'-8"	2'-2"	5'-2"	7'-8"	2.52	1.28	0.90

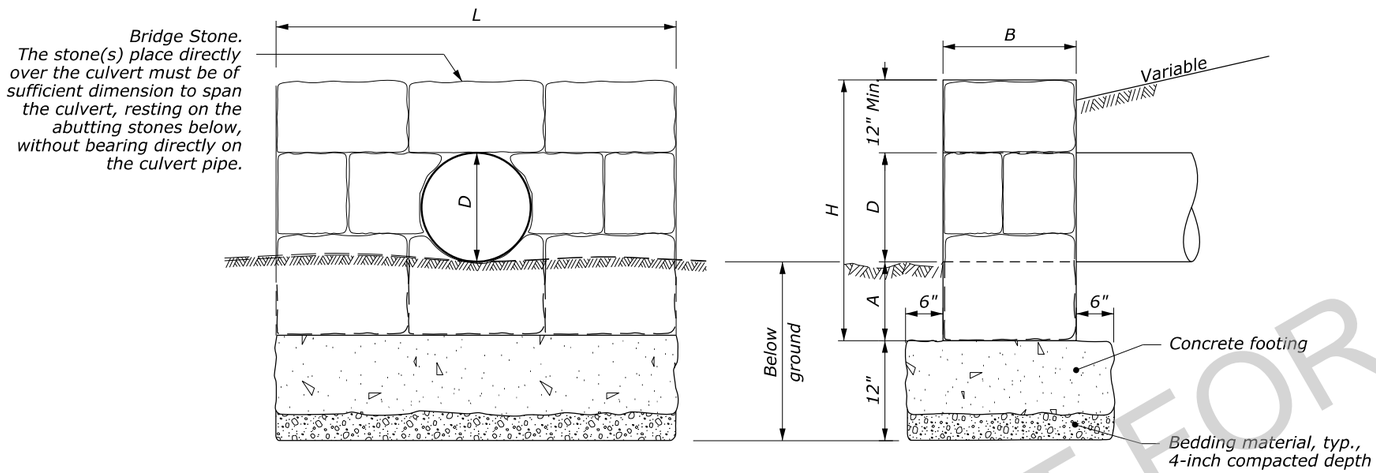

FRONT ELEVATION ROUND PIPE

SIDE ELEVATION ROUND PIPE

STONE MASONRY HEADWALL TYPICAL DETAIL

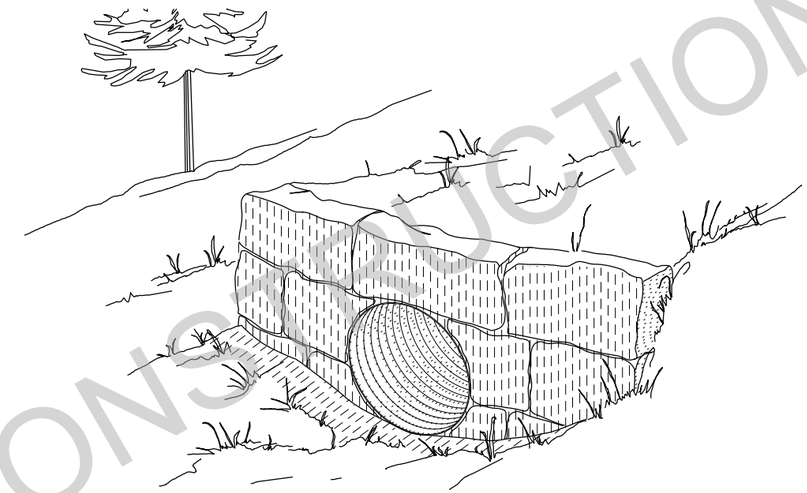

CMP CULVERT ISOMETRIC VIEW

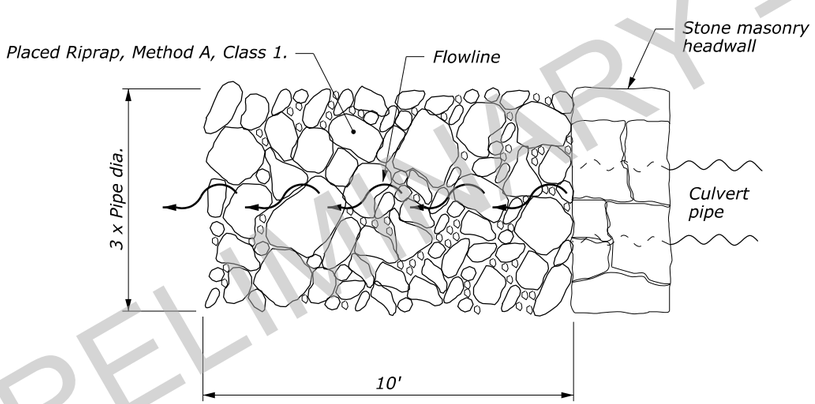

PLAN VIEW

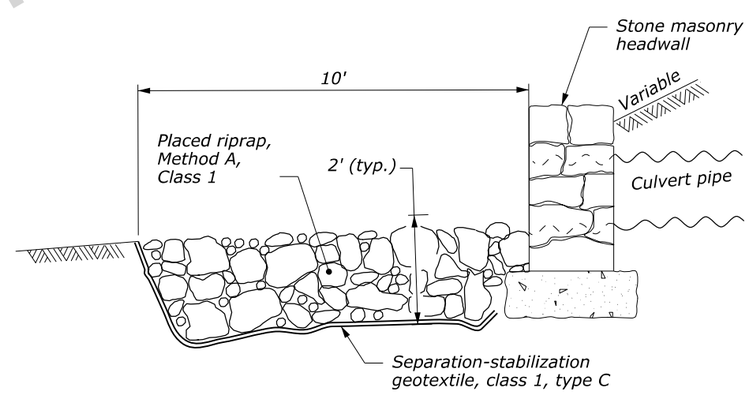

FLOWLINE PROFILE VIEW

ENERGY DISSIPATOR TYPICAL DETAIL

NO SCALE

NOTES:

1. Dimensions and quantities shown on the "Round Pipe" table are minimum dimensions and minimum quantities. Dimensions and quantities may need to be increased to accomodate conditions at each headwall location. The 'L' dimension must be great enough to meet or exceed the horizontal distance between slope stake limits of furrow ditches.
2. Produce stone from rock material matching color and texture of the surrounding terrain or as directed by the CO.
3. Provide a variable rock face finish that emulates the stone pattern set by the CO in the field. The CO will identify one, two, or three constructed headwalls, as examples, that illustrates the stone masonry pattern to be emulated during the construction of stone masonry headwalls.
4. Install headwalls parallel to the roadway line and grade where the headwall is less than 24-inches below shoulder grade.
5. Modify headwalls as directed by the CO where pipes are skewed.
6. Incorporate energy dissipators into construction at all culvert outlets.

STONE MASONRY HEADWALL DETAILS

PRELIMINARY - NOT FOR CONSTRUCTION

4 May 2026 9:01 AM c:\pw_work_wf\d0696551\yell15-2_details_Sheets.dgn [Stone Masonry Headwall Details]

PROJECT	SHEET NUMBER
WY NP YELL 15(2)	G.8

METAL ROUND PIPE CULVERT

FILL HEIGHT AND METAL THICKNESS TABLE FOR HELICAL LOCKSEAM AND WELDED SEAM PIPE CULVERT

STEEL

PIPE SIZE DIAMETER INCHES	MINIMUM COVER INCHES	2⅔" x ½" CORRUGATIONS					3" x 1" CORRUGATIONS					5" x 1" CORRUGATIONS				
		METAL THICKNESS (INCH/GAGE)														
		0.064/16	0.079/14	0.109/12	0.138/10	0.168/8	0.064/16	0.079/14	0.109/12	0.138/10	0.168/8	0.064/16	0.079/14	0.109/12	0.138/10	0.168/8
		MAXIMUM FILL HEIGHT ABOVE TOP OF PIPE (FEET)														
12	12	100	100	100	100	100										
15	12	100	100	100	100	100										
18	12	100	100	100	100	100										
21	12	100	100	100	100	100										
24	12	100	100	100	100	100										
30	12	85	100	100	100	100										
36	12	71	89	100	100	100	81	100	100	100	100					
42	12	61	76	100	100	100	70	87	100	100	100					
48	12	53	66	93	100	100	61	76	100	100	100	54	68	95	100	100
54	12		59	83	100	100	54	68	95	100	100	48	60	85	100	100
60	12			74	97	100	49	61	86	100	100	43	54	76	98	100
66	12				87	100	44	55	78	100	100	39	49	69	89	100
72	12				80	97	40	51	71	92	100	36	45	63	82	100
78	12					87	37	47	66	85	100	33	42	58	75	92
84	12					75	35	43	61	78	96	31	39	54	70	86
90	12						32	40	57	73	90	29	36	51	65	80
96	12							38	53	69	84		34	48	61	75
102	18							36	50	65	79		32	45	57	71
108	18								47	61	75			42	54	67
114	18								45	58	71			40	52	63
120	18								43	55	67			38	49	60
126	18									52	64				47	57
132	18									50	61				44	54
138	18									48	58				42	52
144	18										56					50

ALUMINUM

PIPE SIZE DIAMETER INCHES	MINIMUM COVER INCHES	2⅔" x ½" CORRUGATIONS					3" x 1" CORRUGATIONS				
		METAL THICKNESS (INCH/GAGE)									
		0.060/16	0.075/14	0.105/12	0.135/10	0.164/8	0.060/16	0.075/14	0.105/12	0.135/10	0.164/8
		MAXIMUM FILL HEIGHT ABOVE TOP OF PIPE (FEET)									
12	12	100	100	100	100	100					
15	12	100	100	100	100	100					
18	12	100	100	100	100	100					
21	12	88	100	100	100	100					
24	12	77	97	100	100	100					
30	12	62	77	100	100	100	71	89	100	100	100
36	12	52	64	90	100	100	59	74	100	100	100
42	12	44	55	77	99	100	51	64	89	100	100
48	12			67	87	100	44	56	78	100	100
54	18			54	71	88	39	50	69	93	100
60	18				57	72	35	45	62	83	98
66	18					58	32	40	56	76	89
72	18					45	30	37	55	70	82
78	24							34	48	64	75
84	24								44	59	70
90	24								41	62	65
96	24								38	51	61
102	24									46	55
108	24									42	50
114	24										45
120	24										40

NOTE:

1. When directed, camber pipe culverts upward from a chord through the inlet and outlet inverts an ordinate amount equal to 1% of the pipe length. Develop camber on a parabolic curve. If the midpoint elevation on the parabolic curve as designed exceeds the elevation of the inlet invert, reduce the amount of camber or increase the pipe culvert gradient.
2. Fill heights exceeding 100 feet require special analysis by the CO.
3. The fill heights in the table are for helical lockseam and welded seam pipe only. Fill heights for culvert pipe with annular corrugations are more restrictive than those of helical lockseam and welded seam pipe. Obtain approval before furnishing annular corrugation pipe.
4. For flexible pavement and aggregate surface roadways, measure minimum cover from the top of the pipe culvert to the bottom of the roadway subgrade. For rigid pavements, measure minimum cover from the top of the pipe culvert to the top of the pavement. For all roadway surface types, measure maximum fill height from the top of the pipe culvert to the top of the pavement.

METAL PIPE ARCH CULVERT

FILL HEIGHT AND METAL THICKNESS TABLE FOR HELICAL LOCKSEAM AND WELDED SEAM PIPE CULVERT

STEEL

PIPE ARCH SIZE SPAN x RISE INCHES	EQUI-VALENT DIAMETER INCHES	MINIMUM CORNER RADIUS INCHES	MINIMUM COVER INCHES	2⅔" x ½" CORRUGATIONS					3" x 1" CORRUGATIONS				5" x 1" CORRUGATIONS			
				METAL THICKNESS (INCH/GAGE)												
				0.064/16	0.079/14	0.109/12	0.138/10	0.168/8	0.079/14	0.109/12	0.138/10	0.168/8	0.079/14	0.109/12	0.138/10	0.168/8
				MAXIMUM FILL HEIGHT ABOVE TOP OF PIPE (FEET)												
17 x 13	15	3	12	13												
21 x 15	18	3	12	12												
24 x 18	21	3	12	13												
28 x 20	24	3	12	13												
35 x 24	30	3	12	12												
42 x 29	36	3.5	12	12												
49 x 33	42	4	12		12											
57 x 38	48	5	12			12										
60 x 46	54	8	15							21				21		
64 x 43	54	6	12			12										
66 x 51	60	9	15							21				21		
71 x 47	60	7	12				12									
73 x 55	66	12	18							20				20		
77 x 52	66	8	12					12								
81 x 59	72	14	18						17				17			
83 x 57	72	9	12					12								
87 x 63	78	14	18						17				17			
95 x 67	84	16	18						17				17			
103 x 71	90	16	18							17			17			
112 x 75	96	18	21							16				16		
117 x 79	102	18	21							16				16		
128 x 83	108	18	24								16				16	
137 x 87	114	18	24								16				16	
142 x 91	120	18	24									16				16

ALUMINUM

PIPE ARCH SIZE SPAN x RISE INCHES	EQUI-VALENT DIAMETER INCHES	MINIMUM CORNER RADIUS INCHES	MINIMUM COVER INCHES	2⅔" x ½" CORRUGATIONS				3" x 1" CORRUGATIONS			
				METAL THICKNESS (INCH/GAGE)							
				0.060/16	0.075/14	0.105/12	0.135/10	0.060/16	0.075/14	0.105/12	0.135/10
				MAXIMUM FILL HEIGHT ABOVE TOP OF PIPE (FEET)							
17 x 13	15	3	12	13							
21 x 15	18	3	12	12							
24 x 18	21	3	12	13							
28 x 20	24	3	12		13						
35 x 24	30	3	12		12						
42 x 29	36	3.5	15			12					
49 x 33	42	4	15			12					
57 x 38	48	5	15				12				
60 x 46	54	8	15					21			
64 x 43	54	6	18				12				
66 x 51	60	9	18					21			
73 x 55	66	12	18						20		
81 x 59	72	14	21							17	
87 x 63	78	14	21							17	
95 x 67	84	16	24							17	
103 x 71	90	16	24								17

NO SCALE

U.S. DEPARTMENT OF TRANSPORTATION, FHWA
OFFICE OF FEDERAL LANDS HIGHWAY

METAL PIPE CULVERT

FLH STANDARD 602-1

SPECIFICATION FP-24, FP-14

APPROVED FOR USE 8/2024

PRELIMINARY - NOT FOR CONSTRUCTION

c:\pw_work_wfl\d0713922\Std602-1.dgn [Std 602-1]
15 May 2026 8:27 AM

PROJECT	SHEET NUMBER
WY NP YELL 15(2)	G.9

COUPLING BANDS FOR METAL PIPE CULVERT [1]

CORRUGATION SIZE [2] INCHES	ROUND PIPE DIAMETER INCHES	PIPE ARCH SPAN × RISE INCHES	MINIMUM BAND WIDTH (INCHES) ANNULAR CORRUGATED BANDS [3]	HELICALLY CORRUGATED BANDS [4]	SEMI-CORRUGATED BANDS [5]
1½ × ¼	underline [6]	-	10.5	7	10.5
2⅔ × ½	12 to 36	17 × 13 to 42 × 29	7	12	
	42 to 72	49 × 33 to 83 × 57	10.5	12	
	78 to 84	-	10.5	12	10.5
3 × 1	36 to 72	60 × 46 to 81 × 59	12	14	10.5
	78 to 144	87 × 64 to 142 × 91	12	14	10.5
5 × 1	36 to 72	60 × 46 to 81 × 59	20	22	
	78 to 144	87 × 64 to 142 × 91	20	22	

[1] Fabricate annular, helical and semi-corrugated type coupling bands from the same metal as the connecting pipe. Provide coupling bands not more than 3 nominal sheet thicknesses thinner than the thickness of the pipe to be connected, and no thinner than 0.052 inch for steel or 0.048 inch for aluminum. Fasten coupling bands with the following diameter of bolt:
⅜" for 18" round culvert (21" × 15" pipe arch) or less
½" for 21" round culvert (24" × 18" pipe arch) or more

[2] For helically corrugated pipe with rerolled ends, the nominal corrugations size refers to the dimension of the end corrugation in the pipe.

[3] Use annular corrugated bands with pipes having annular corrugations or with helical pipe having rerolled end to form annular corrugations. A 10.5 inch band is acceptable on pipe ends rerolled with 2⅔" × ½" corrugations. A 12 inch band is acceptable on pipe ends rerolled with 3" × 1" pipe corrugations.

[4] Use helical corrugated bands with pipes having helically corrugated ends.

[5] The minimum band widths shown for 3" × 1" and 5" × 1" corrugated sizes apply to 2⅔" × ½" corrugations on rerolled pipe ends.

[6] Smooth sleeve-type couplers and flat bands may be used for pipe diameters of 12" or less. Use a matching metal having a nominal thickness of not less than 0.040 inch for steel, or 0.036 inch for aluminum, or a plastic with an equivalent strength to metal.

NOTE:

1. Other types of coupling bands or fastening devices that comply with the joint performance criteria of AASHTO Standard specifications for Highway Bridges, Division II Section 26 may be used.

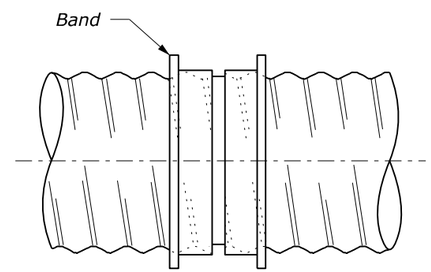

SLEEVE JOINT

Smoother sleeve with center stop.
Stab type joint

SMOOTH SLEEVE BAND

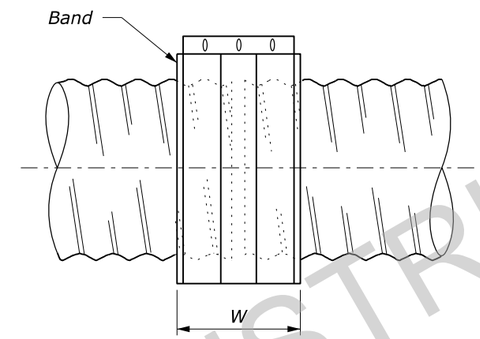

FLAT BAND

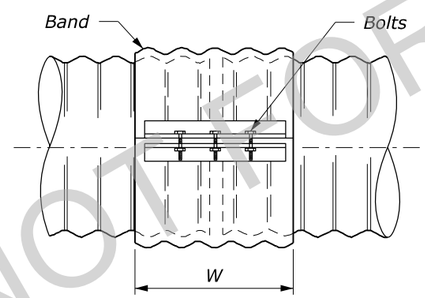

SIDE VIEW

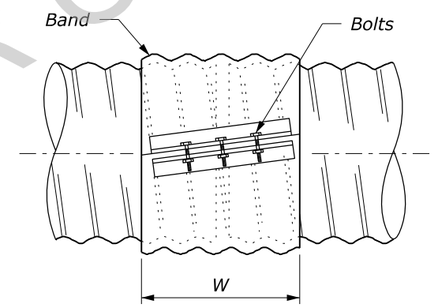

SIDE VIEW

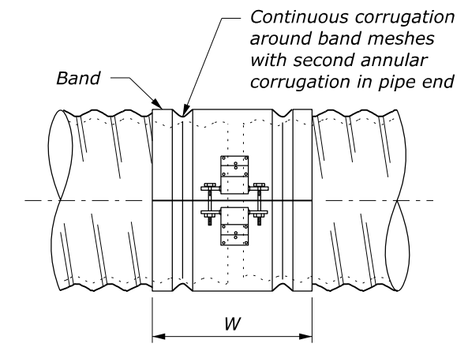

SIDE VIEW

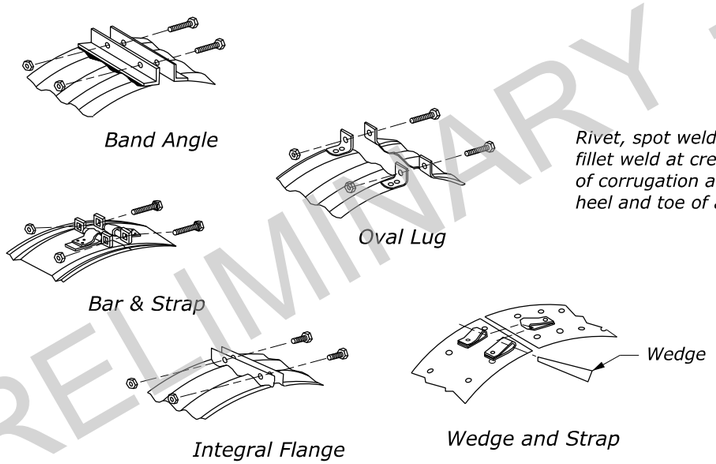

STANDARD BAND CONNECTIONS

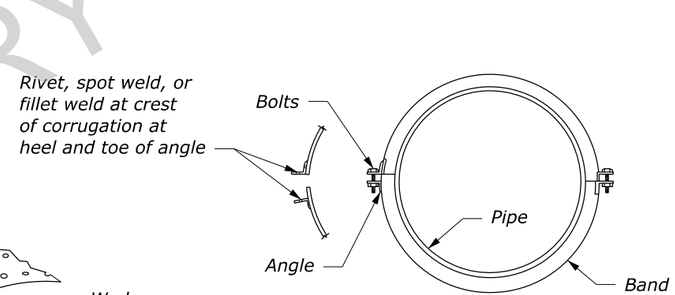

END VIEW

Second angle connection optional to 42" diameter, required above 42" diameter

ANNULAR BAND

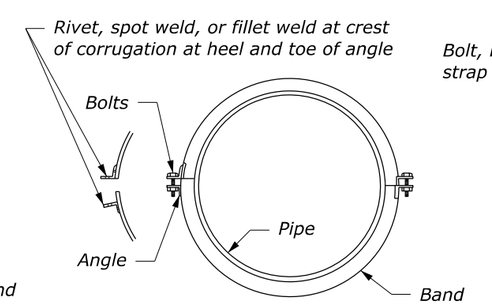

END VIEW

Second angle connection optional to 42" diameter, required above 42" diameter

HELICAL BAND

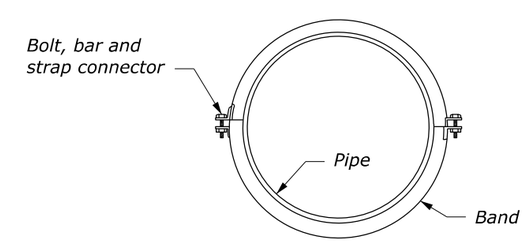

END VIEW

SEMI-CORRUGATED BAND

NO SCALE

U.S. DEPARTMENT OF TRANSPORTATION, FHWA OFFICE OF FEDERAL LANDS HIGHWAY	FLH STANDARD 602-2
METAL PIPE CULVERT COUPLING BAND	SPECIFICATION FP-24, FP-14
	APPROVED FOR USE 1/2024

PRELIMINARY - NOT FOR CONSTRUCTION

c:\pw_work_wfl\d0713922\Std602-2.dgn [Std 602-2]
15 May 2026 8:27 AM

PROJECT	SHEET NUMBER
WY NP YELL 15(2)	G.10

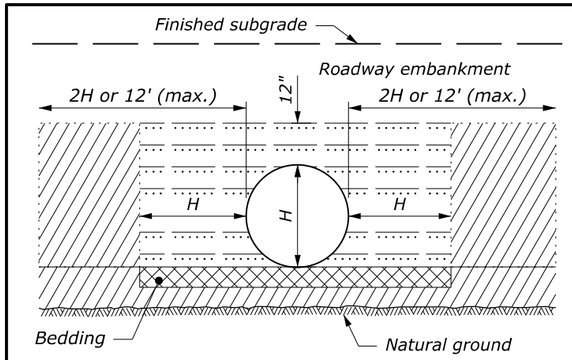

ABOVE NATURAL GROUND

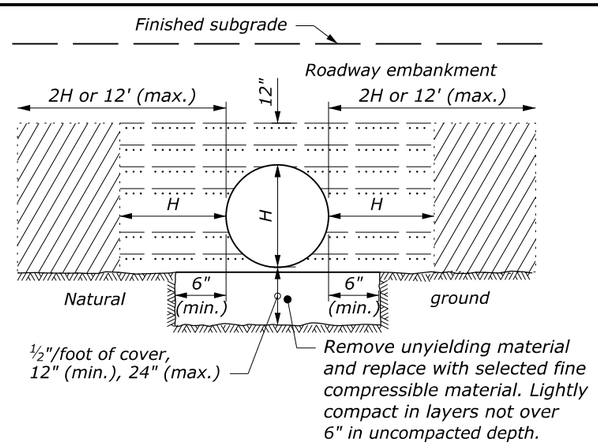

ON UNYIELDING MATERIAL

BEDDING DEPTH	
PIPE SIZE (H)	DEPTH
12" to 54"	4"
> 54"	6"

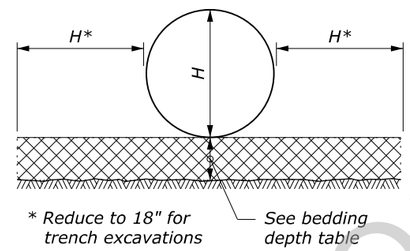

PIPE BEDDING

NOTE:

1. When directed, camber pipe culverts upward from a chord through the inlet and outlet inverts an ordinate amount equal to 1% of the pipe length. Develop camber on a parabolic curve. If the midpoint elevation on the parabolic curve as designed exceeds the elevation of the inlet invert, reduce the amount of camber or increase the pipe culvert gradient.
2. H equals the diameter of all round pipe culverts or the rise dimension of all pipe arch culverts.
3. See Section 704 for bedding and backfill requirements.

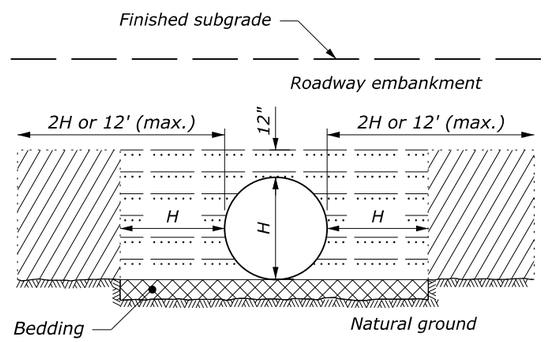

ON NATURAL GROUND

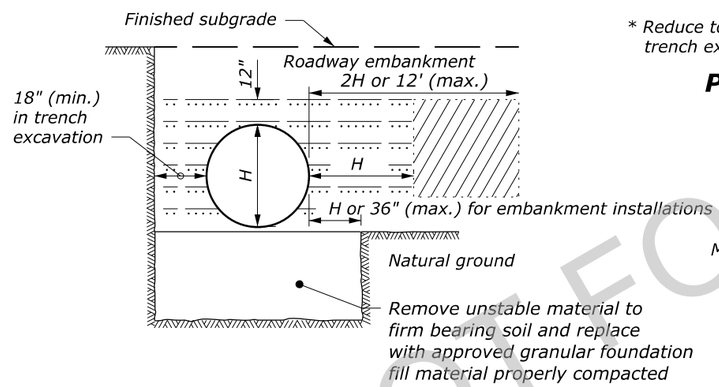

ON UNSTABLE MATERIAL

MINIMUM SPACING	
DIAMETER or SPAN	SPACING
UP to 48"	24"
48" and UP	Half diameter or span or 36", whichever is less

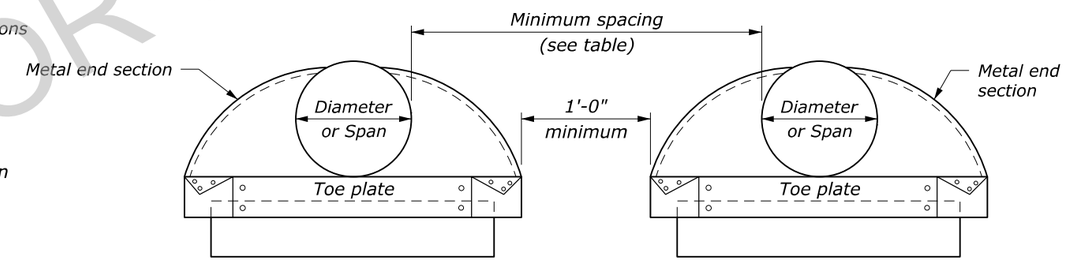

ELEVATION

MULTIPLE PIPE INSTALLATION

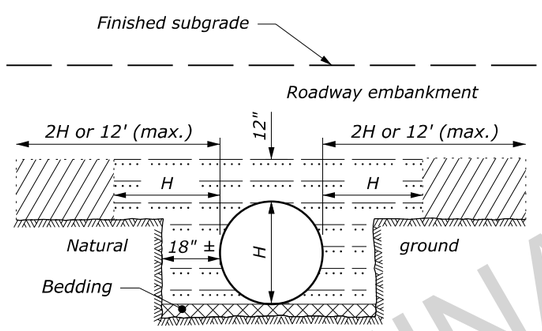

ABOVE AND BELOW NATURAL GROUND

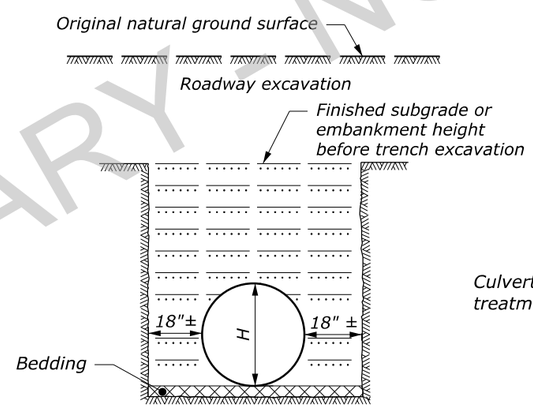

BELOW NATURAL GROUND OR TRENCH EXCAVATION IN EMBANKMENT

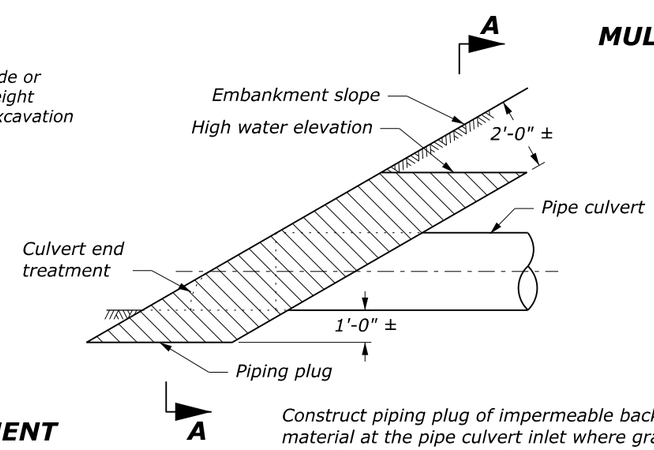

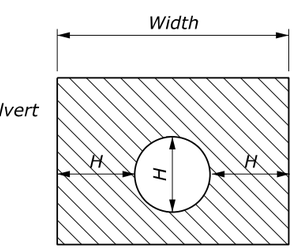

SECTION A-A

Construct piping plug of impermeable backfill material at the pipe culvert inlet where granular material is used for backfill. Width may be adjusted to tie into impervious material.

PIPING PLUG

LEGEND:

- Bedding material (uncompacted)
- Embankment material placed in layers not exceeding 6" compacted depth.
- Compacted backfill material placed in layers not exceeding 6" compacted depth; or flowable backfill according to Section 614.
- Impermeable backfill material.

NO SCALE

U.S. DEPARTMENT OF TRANSPORTATION, FHWA
OFFICE OF FEDERAL LANDS HIGHWAY

METAL AND PLASTIC PIPE CULVERT BEDDING

FLH STANDARD 602-3
SPECIFICATION FP-24
APPROVED FOR USE 1/2024

PRELIMINARY - NOT FOR CONSTRUCTION

c:\pw_work_wfl\d0713922\Std602-3.dgn [Std 602-3]
15 May 2026 8:27 AM

PROJECT	SHEET NUMBER
WY NP YELL 15(2)	G.11

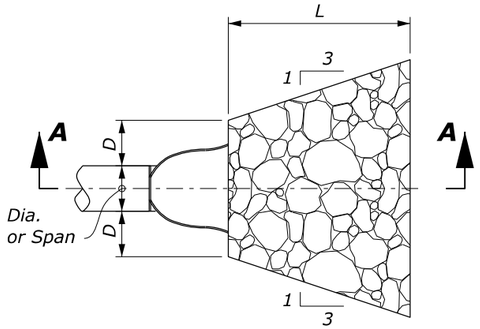

PLAN VIEW

CULVERT WITH STANDARD END SECTION

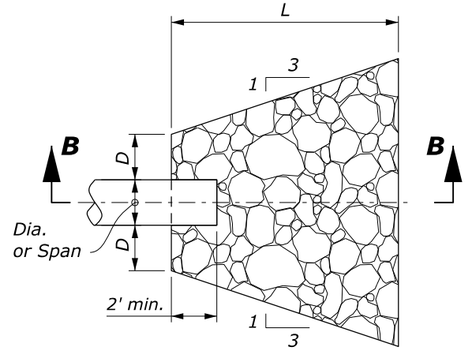

PLAN VIEW

CULVERT WITHOUT STANDARD END SECTION

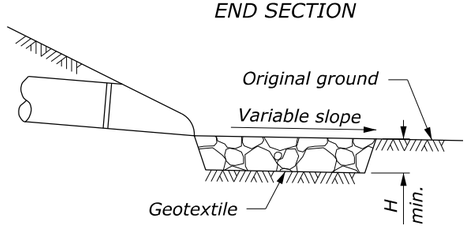

SECTION A-A

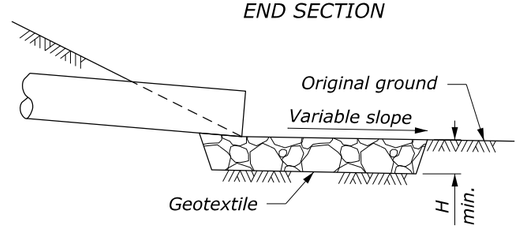

SECTION B-B

PROTECTIVE APRON AT CULVERT OUTLET WITHOUT DITCH

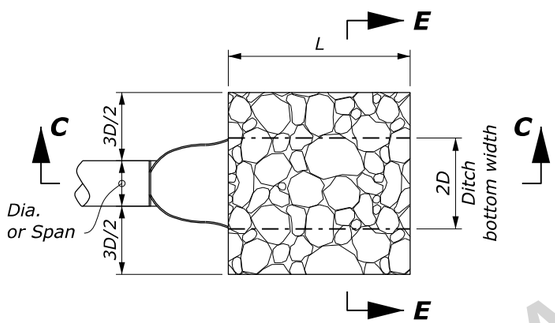

PLAN VIEW

CULVERT WITH STANDARD END SECTION

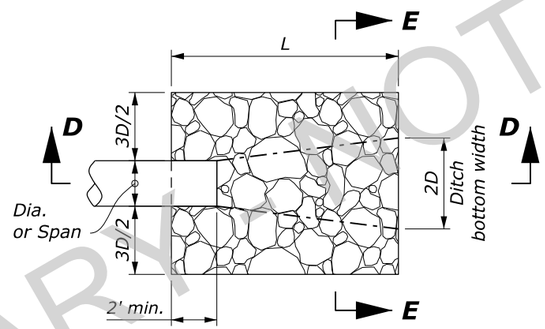

PLAN VIEW

CULVERT WITHOUT STANDARD END SECTION

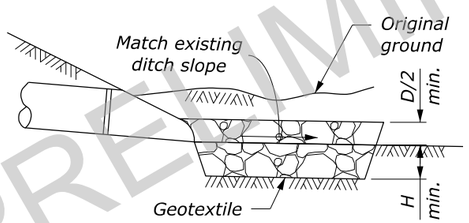

SECTION C-C

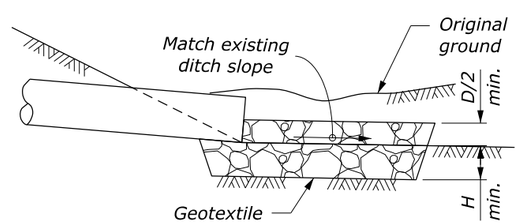

SECTION D-D

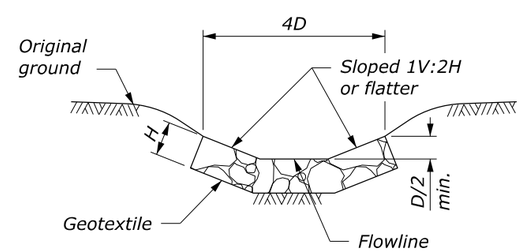

SECTION E-E

PROTECTIVE APRON AT CULVERT OUTLET WITH DITCH

NO SCALE

OUTLET WITHOUT DITCH PROTECTIVE APRON DIMENSIONS AND QUANTITIES FOR INFORMATION ONLY						
	CULVERT SIZE D (INCHES)	RIPAP CLASS	APRON LENGTH L (FEET)	APRON DEPTH H (INCHES)	ESTIMATED RIPRAP QUANTITY (CUYD)	ESTIMATED GEOTEXTILE QUANTITY (SQYD)
WITH END SECTION	12	2	4	18	1.0	5
	18	2	6	18	2.2	9
	24	2	8	18	3.9	13
	30	3	12.5	24	10.8	27
	36	3	15	24	15.6	37
	42	4	21	30	34.0	63
	48	4	24	30	44.4	78
WITHOUT END SECTION	12	2	6	18	1.7	7
	18	2	8	18	3.2	12
	24	2	10	18	5.2	17
	30	3	14.5	24	13.2	32
	36	3	17	24	18.5	42
	42	4	23	30	38.7	70
	48	4	26	30	49.8	86

OUTLET WITH DITCH PROTECTIVE APRON DIMENSIONS AND QUANTITIES FOR INFORMATION ONLY						
	CULVERT SIZE D (INCHES)	RIPAP CLASS	APRON LENGTH L (FEET)	APRON DEPTH H (INCHES)	ESTIMATED RIPRAP QUANTITY (CUYD)	ESTIMATED GEOTEXTILE QUANTITY (SQYD)
WITH END SECTION	12	2	4	18	0.9	4
	18	2	6	18	2.0	8
	24	2	8	18	3.6	12
	30	3	12.5	24	9.3	24
	36	3	15	24	13.3	32
	42	4	21	30	27.2	52
	48	4	24	30	35.6	65
WITHOUT END SECTION	12	2	6	18	1.3	6
	18	2	8	18	2.7	10
	24	2	10	18	4.4	15
	30	3	14.5	24	10.7	27
	36	3	17	24	15.1	36
	42	4	23	30	29.8	56
	48	4	26	30	38.5	70

NOTE:

1. Use for aprons serving culverts with slopes less than 10%.
2. Furnish separation and stabilization geotextile.
3. Do not measure riprap placement excavation for payment.

PRELIMINARY - NOT FOR CONSTRUCTION

c:\pw_work_wfl\d0713922\W251-1.dgn [Std W251-1]
15 May 2026 8:27 AM

U.S. DEPARTMENT OF TRANSPORTATION, FHWA
OFFICE OF FEDERAL LANDS HIGHWAY

PLACED RIPRAP AT CULVERT OUTLETS

WFL STANDARD W251-1

SPECIFICATION FP-24, FP-14

APPROVED FOR USE 8/2016

PROJECT	SHEET NUMBER
WY NP YELL 15(2)	H.2

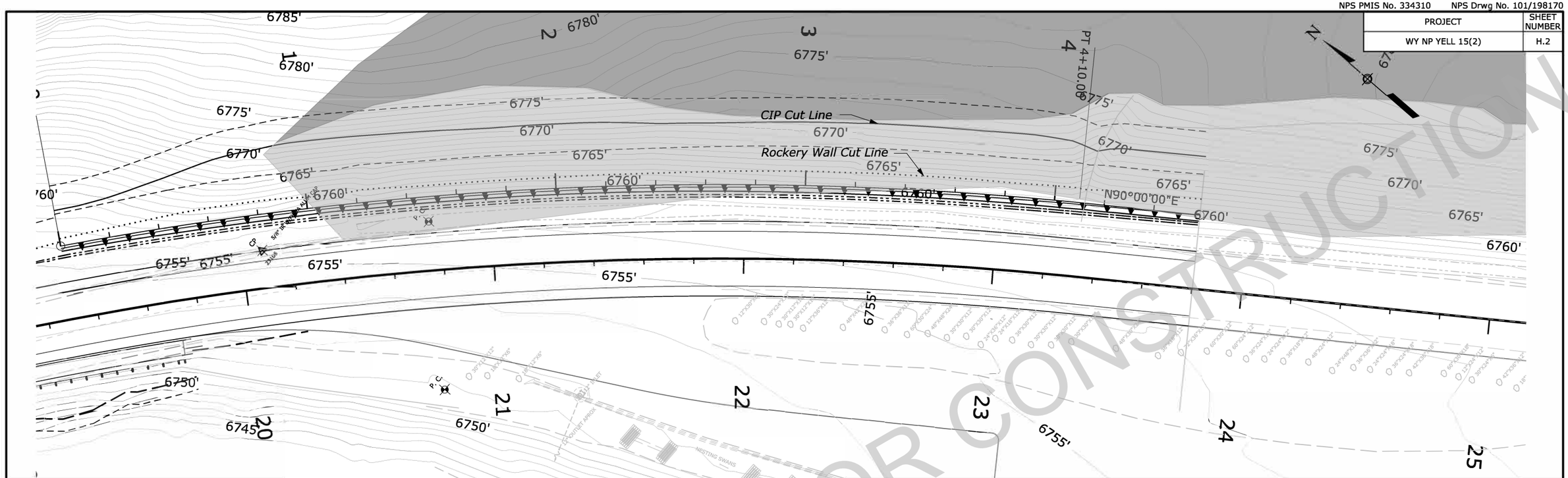

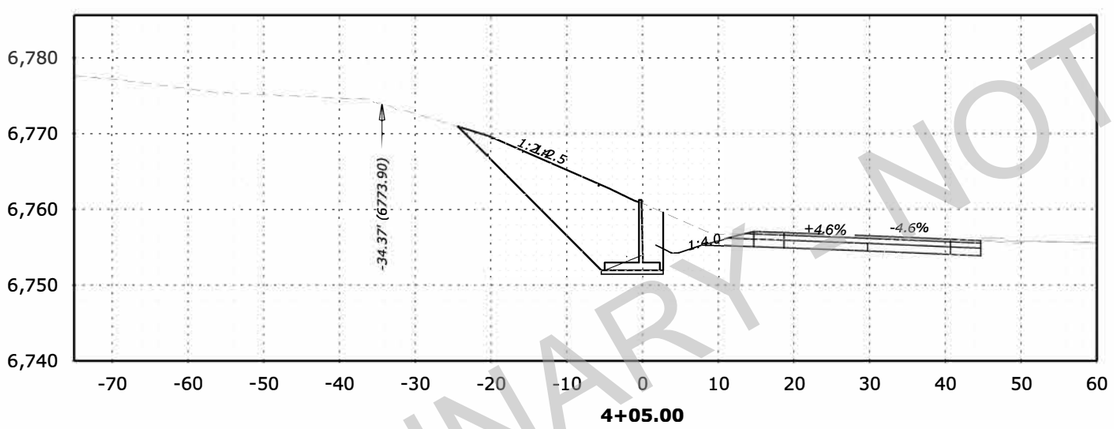

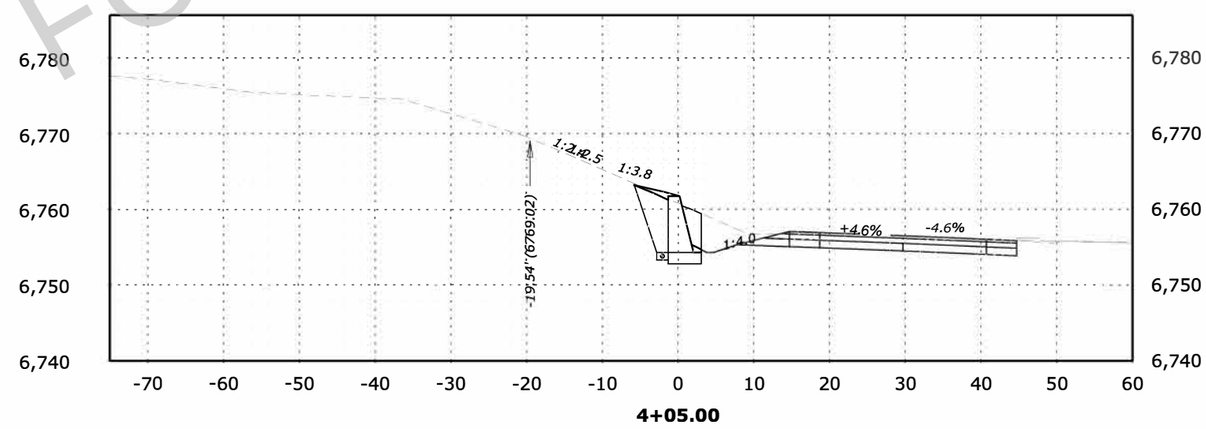

PRELIMINARY - NOT FOR CONSTRUCTION

RETAINING WALL EXHIBIT

c:\pw_work_wrl\d0717869\cip v2.dgn [Retaining Wall Exhibit]
22 April 2026 9:51 AM

PROJECT	SHEET NUMBER
WY NP YELL 15(2)	H.3

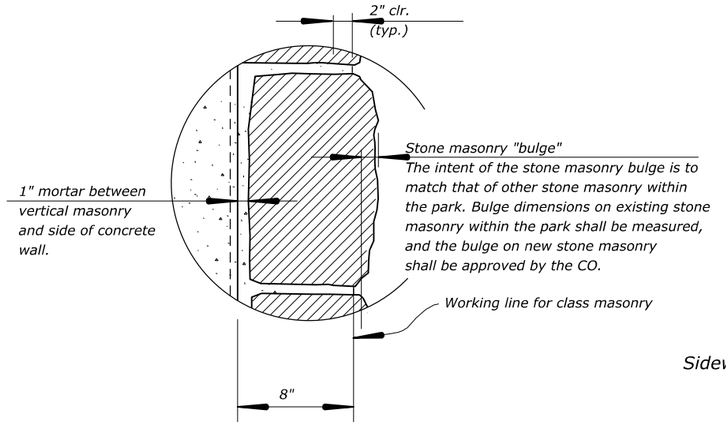

MASONRY BULGE DETAIL

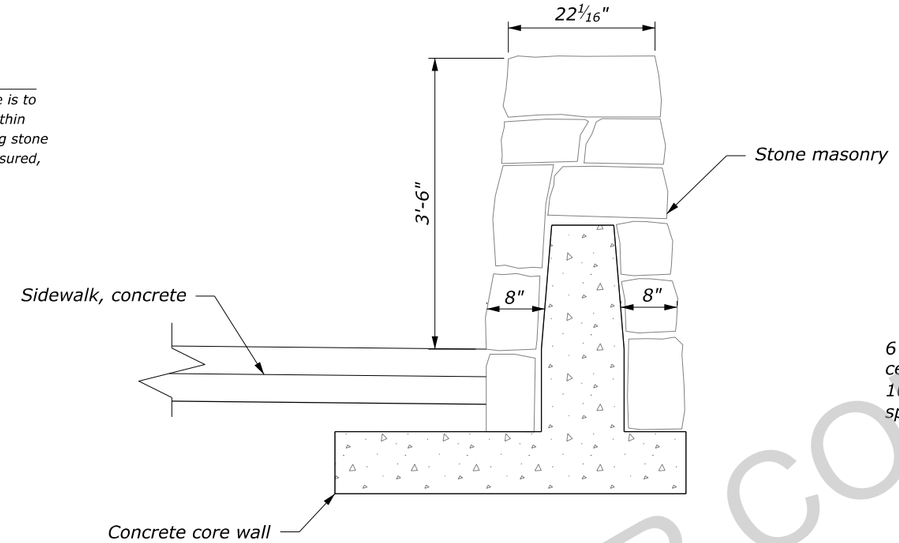

STONE MASONRY GUARDWALL TYPICAL SECTION

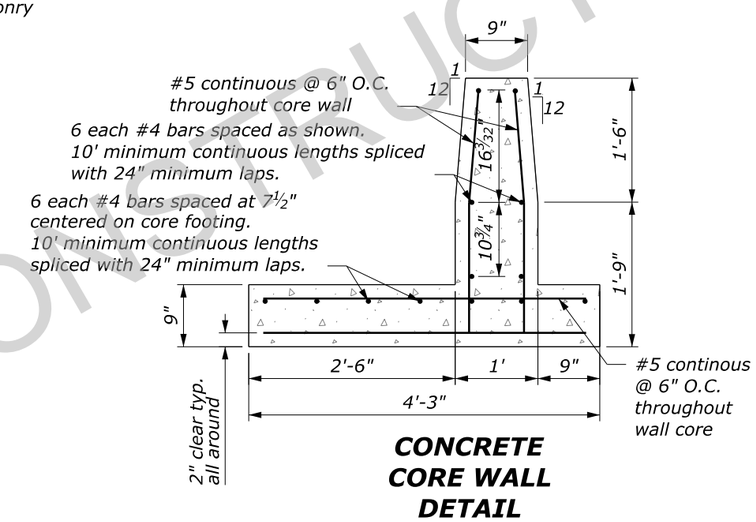

CONCRETE CORE WALL DETAIL

SAMPLE STONE MASONRY PATTERN

(Photo from Gibbon Falls)

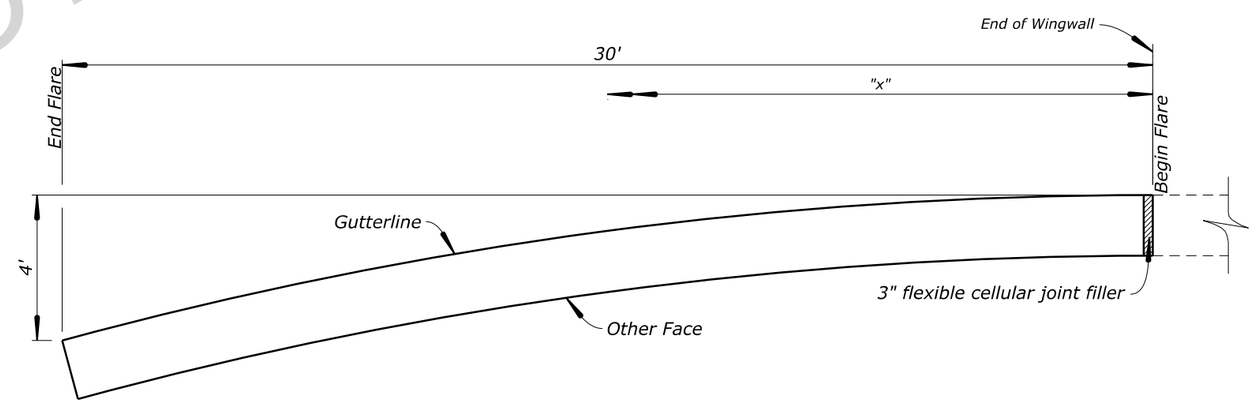

"x"	OFFSET
0	0
3'-0"	½"
6'-0"	1⅞"
9'-0"	4¼"
12'-0"	7 9/16"
15'-0"	11 13/16"
18'-0"	1'-5 1/16"
21'-0"	1'-11 5/16"
24'-0"	2'-6½"
27'-0"	3'-2¾"
30'-0"	4'-0"

GUARDWALL FLARE DETAIL

Note: The 30'-0" dimension and the "x" dimension are measured along ℄ Rdwy.

STONE MASONRY GUARDWALL

PRELIMINARY - NOT FOR CONSTRUCTION

15 May 2026 8:24 AM c:\pw_work_wfl\d0714452\yell15-2_Stone Masonry Guardwall Detail.dgn [Stone Masonry Guardwall]

PROJECT	SHEET NUMBER
WY NP YELL 15(2)	I.2

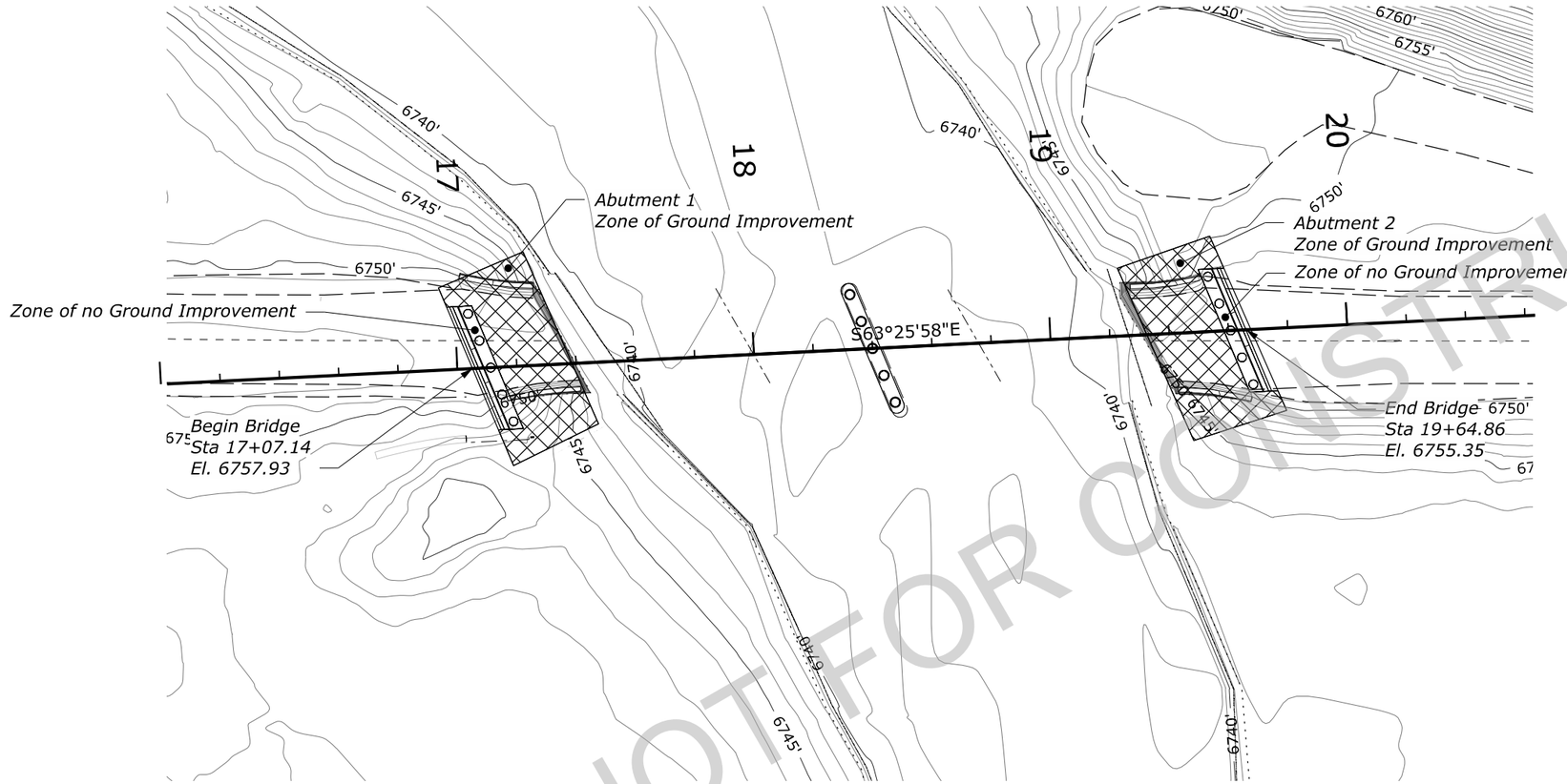

PLAN VIEW
NTS

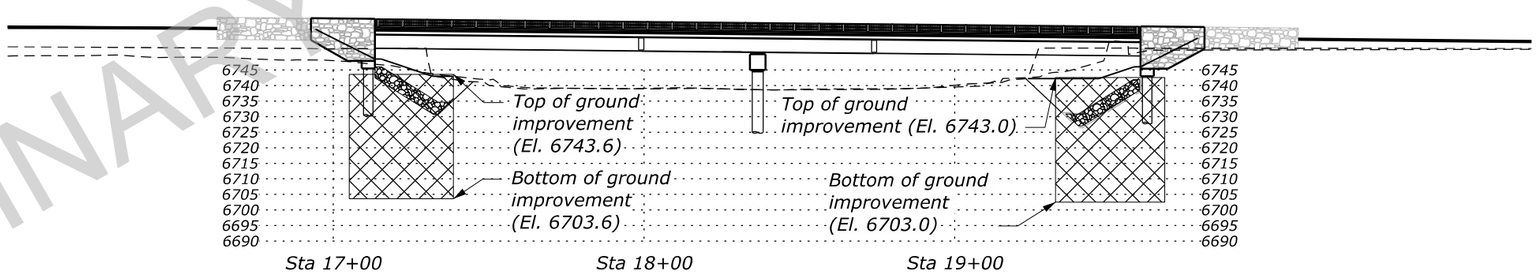

ELEVATION VIEW
NTS

GEOTECHNICAL GROUND IMPROVEMENT

PRELIMINARY - NOT FOR CONSTRUCTION

21 April 2026 12:29 PM c:\pw_work_wfl\d0626703\WY NPS YELL 15(2)_geo_G1.dgn [Geotechnical Ground Improvement]

PROJECT	SHEET NUMBER
WY NP YELL 15(2)	J.2

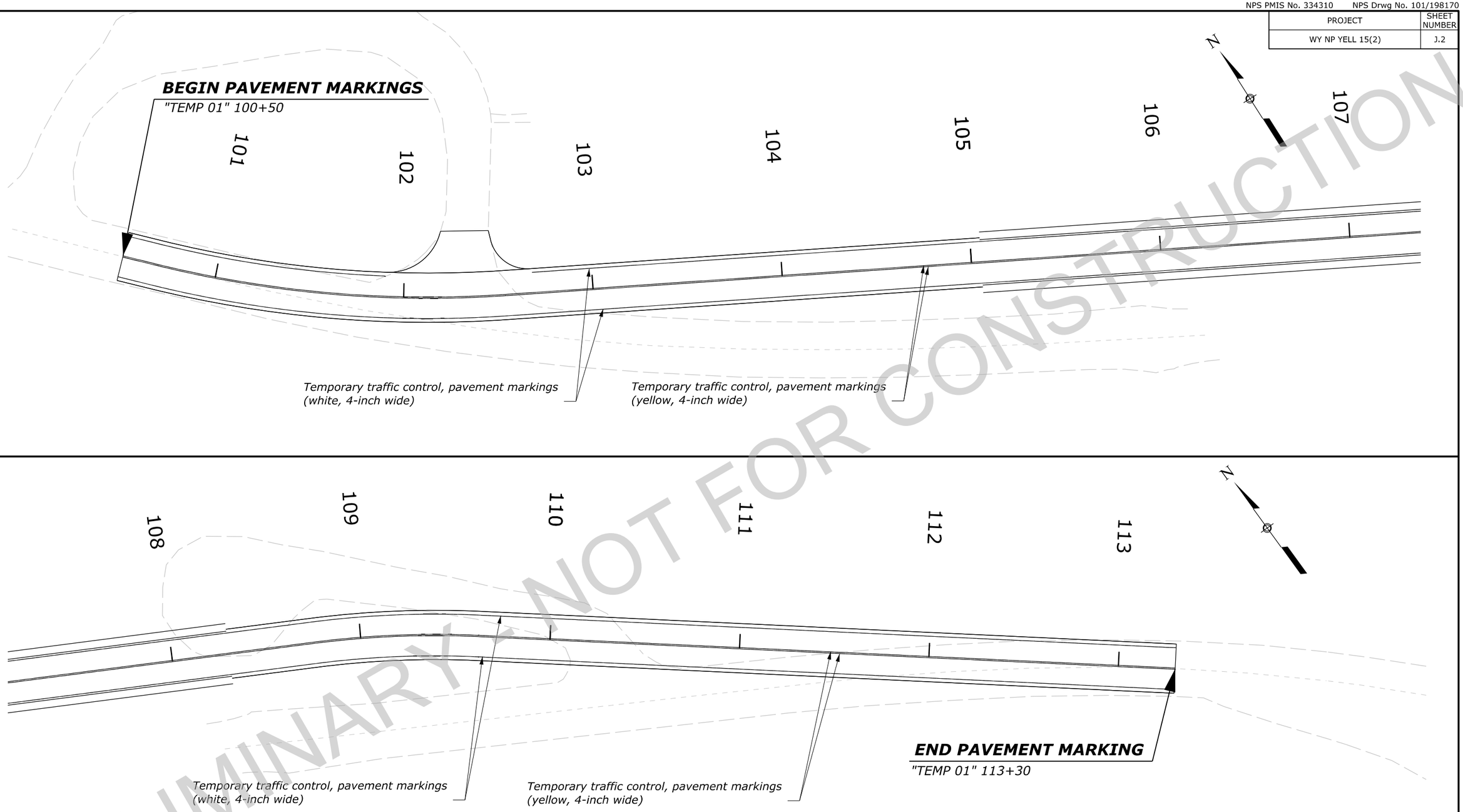

PRELIMINARY - NOT FOR CONSTRUCTION

TEMPORARY ALIGNMENT
TEMPORARY PAVEMENT MARKING

c:\pw_work\wfl\d0661608\yell15-2_TTC.dgn [BL - TTC Temp Bridge 1 (Sheet)]
26 March 2026 7:34 PM

PROJECT	SHEET NUMBER
WY NP YELL 15(2)	J.3

SIGN SPACING TABLE			
ROAD TYPE	DISTANCE BETWEEN SIGNS IN FEET		
	A	B	C
Urban and Rural 30 mph and less	100	100	100
Urban and Rural 35 mph to 50 mph	350	350	350
Rural greater than 50 mph	500	500	500
Expressway / Freeway	1000	1500	2640

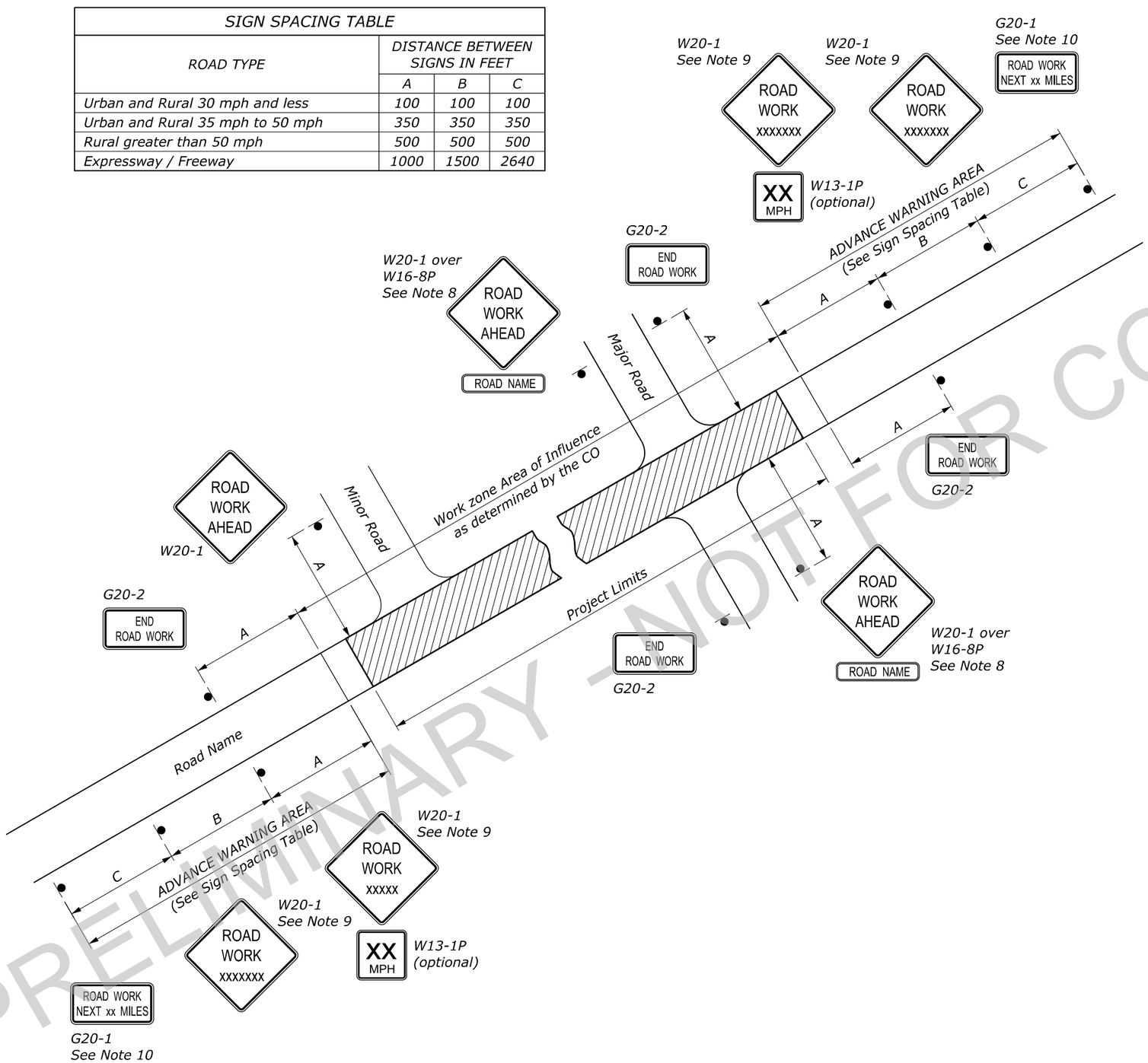

NOTE:

1. Erect all project advance warning signs before starting construction work.
2. Not all details shown on the temporary traffic control sheets may be applicable to this project. The Contractor may add or delete information and details in this traffic control plan as necessary to accommodate actual operations.
3. Where advance warning signs, placed as shown, interfere with permanent signs, locate the warning signs to fit field conditions as approved. Vary messages as required.
4. Install advisory speed plaques under the W20 series warning signs as needed to indicate a maximum recommended speed through the construction area.
5. Ensure all sign supports exposed to traffic are crashworthy.
6. Maintain two-way traffic during all non-work hours except as approved.
7. Do not store traffic control devices along the roadway when not in use. Cover post-mounted signs when not applicable.
8. If W20-1 is placed on a roadway other than that on which the actual construction work occurs, include a supplementary plaque indicating the name of the road on which the construction does occur (applies to major roads only).
9. The message on the W20-1 signs may be ROAD WORK AHEAD or may specify the distance to the work area in feet or in miles. Install an additional W20-1 sign when approach speeds exceed 50 mph. When used, place the two W20-1 signs "B" feet apart according to the Sign Spacing Table.
10. For work zones that are 2 miles or more in length, install G20-1 signs at each end of the project. Show the distance on the G20-1 sign to the nearest whole mile.
11. If signing on a roadway under a jurisdiction other than the client agency, verify that an encroachment permit has been obtained.
12. State standards may be used as an alternative if approved.

PRELIMINARY - NOT FOR CONSTRUCTION

NO SCALE

U.S. DEPARTMENT OF TRANSPORTATION, FHWA OFFICE OF FEDERAL LANDS HIGHWAY	FLH STANDARD 635-1
TEMPORARY TRAFFIC CONTROL ADVANCE SIGNING	SPECIFICATION FP-24, FP-14
	APPROVED FOR USE 2/2024

15 May 2026 8:17 AM c:\pw_work_wfl\d0661608\Std635-1.dgn [Std 635-1]

PROJECT	SHEET NUMBER
WY NP YELL 15(2)	J.4

NOTE:

1. To substitute raised pavement markers for lines, use the following patterns:

   2 ft broken line: two pavement markers spaced 2 ft apart allowed by the gap shown based on curvature.

   Single solid line: pavement markers spaced on 10 ft centers.

   Double solid line: two pavement markers, side by side, spaced on 10 ft centers.

2. On two- or three-lane roads, signs may be used instead of temporary pavement markings as shown on Standard 635-3.

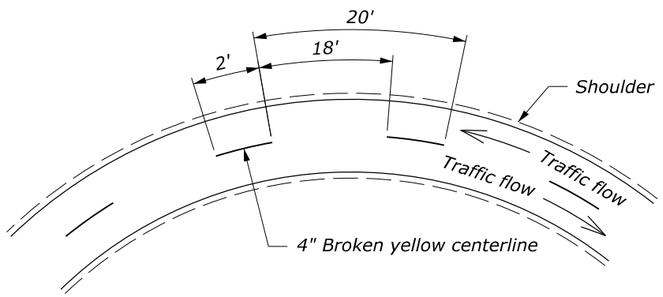

DETAIL A1
Passing zone both directions
Two-way traffic

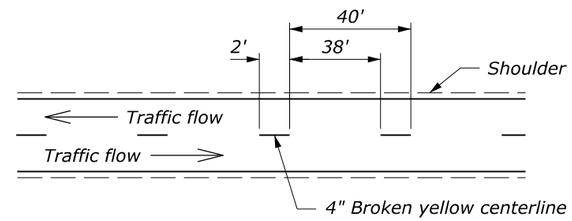

DETAIL B1
Passing zone both directions
Two-way traffic

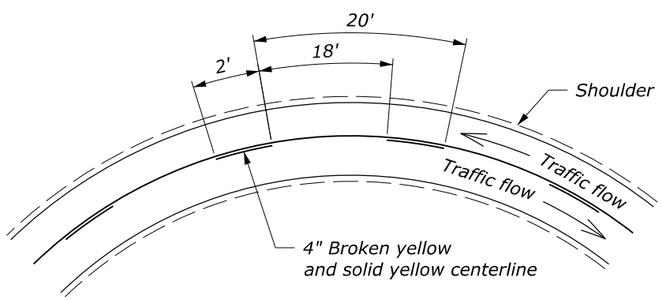

DETAIL A2
No passing zone one direction
Two-way traffic

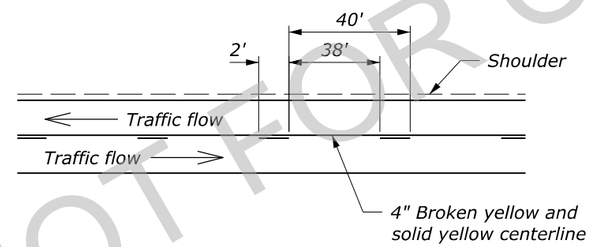

DETAIL B2
No Passing zone one direction
Two-way traffic

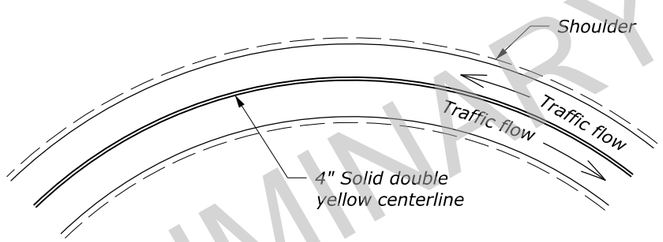

DETAIL A3
No passing zone both directions
Two-way traffic

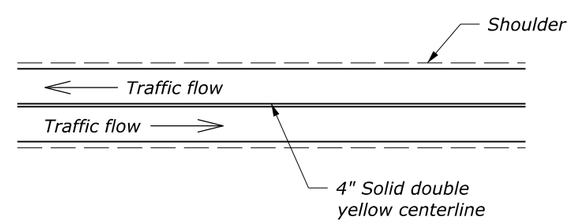

DETAIL B3
No Passing zone both directions
Two-way traffic

DETAIL A
Curves < 500' Radius

DETAIL B
Tangents or Curves ≥ 500' Radius

NO SCALE

U.S. DEPARTMENT OF TRANSPORTATION, FHWA
OFFICE OF FEDERAL LANDS HIGHWAY

TEMPORARY PAVEMENT MARKINGS

FLH STANDARD 635-2
SPECIFICATION FP-24, FP-14
APPROVED FOR USE 2/2024

PRELIMINARY - NOT FOR CONSTRUCTION

c:\pw_work_wfl\d0661609\Std635-2.dgn [Std 635-2]
15 May 2026 8:17 AM

PROJECT	SHEET NUMBER
WY NP YELL 15(2)	J.5

LENGTH AND SPACING TABLE				
APPROACH SPEED* MPH	BUFFER SPACE LENGTH FEET	CHANNELIZING DEVICE SPACING IN FEET		
		TAPER AREA	BUFFER SPACE	WORK SPACE
20	115	20	40	40
25	155	20-25	50	50
30	200	20-30	60	60
35	250	20-35	70	70
40	305	20-40	80	80
45	360	20-45	90	90
50	425	20-50	100	100
55	495	20-55	110	110
60	570	20-60	120	120
65	645	20-65	130	130
70	730	20-70	140	140

* Approach speed based on the regulatory posted speed, not the advisory speed.

SIGN SPACING TABLE			
ROAD TYPE	DISTANCE BETWEEN SIGNS IN FEET		
	A	B	C
Urban and Rural 30 mph and less	100	100	100
Urban and Rural 35 mph to 50 mph	350	350	350
Rural greater than 50 mph	500	500	500
Expressway / Freeway	1000	1500	2640

NOTE:

1. Signs are shown for one direction of travel only. Place signs similar to those depicted for the opposite direction of travel.
2. If the area approaching diversion is not already signed and marked as a no passing zone, add signing and marking as appropriate. Remove conflicting pavement markings.
3. If the tangent distance along the temporary diversion is more than 600 ft, use an appropriate Reverse Curve sign (W1-4) instead of the Double Reverse Curve sign (W24-1). Install a second, appropriate Reverse Curve sign (W1-4) in advance of the second reverse curve back to the original alignment. Use Reverse Turn signs (W1-3) instead when the diversion has sharp curves with recommended speeds of 30 mph or less.
4. If the diversion is completely within the project limits, eliminate the ROAD WORK AHEAD (W20-1) and END ROAD WORK (G20-2) signs.
5. Place channelizing devices outside temporary roadway.
6. Do not allow equipment, materials, or vehicles to be parked or stored in the buffer space.

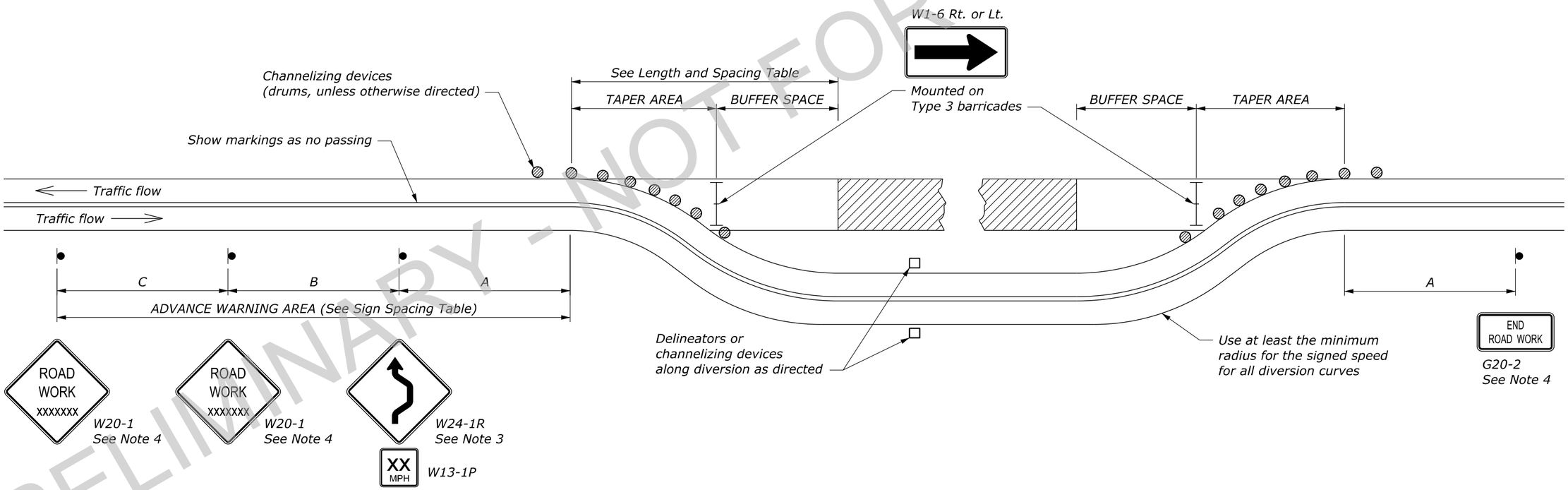

PRELIMINARY - NOT FOR CONSTRUCTION

NO SCALE

U.S. DEPARTMENT OF TRANSPORTATION, FHWA
OFFICE OF FEDERAL LANDS HIGHWAY

TEMPORARY TRAFFIC CONTROL FOR DIVERSION

FLH STANDARD 635-4

SPECIFICATION FP-24, FP-14

APPROVED FOR USE 2/2024

c:\pw_work_wfl\d0661608\Std635-4.dgn [Std 635-4]
15 May 2026 8:17 AM

PROJECT	SHEET NUMBER
WY NP YELL 15(2)	J.6

LENGTH AND SPACING TABLE	
APPROACH SPEED* MPH	BUFFER SPACE LENGTH FEET
20	115
25	155
30	200
35	250
40	305
45	360
50	425
55	495
60	570
65	645
70	730

* Approach speed based on the regulatory posted speed, not the advisory speed.

SIGN SPACING TABLE			
ROAD TYPE	DISTANCE BETWEEN SIGNS IN FEET		
	A	B	C
Urban and Rural 30 mph and less	100	100	100
Urban and Rural 35 mph to 50 mph	350	350	350
Rural greater than 50 mph	500	500	500
Expressway / Freeway	1000	1500	2640

NOTE:

1. Signs are shown for one direction of travel only. Place signs similar to those depicted for the opposite direction of travel.
2. Final location and spacing of devices may be changed to fit field conditions as approved.
3. For pilot car operation, mount the PILOT CAR FOLLOW ME (G20-4) sign at a conspicuous location on the rear of vehicle. Prominently display the name of the Contractor on the pilot car.
4. If closure is completely within the project limits, eliminate the ROAD WORK AHEAD (W20-1) and END ROAD WORK (G20-2) signs.
5. Do not allow equipment, materials, or vehicles to be parked or stored in the buffer space.

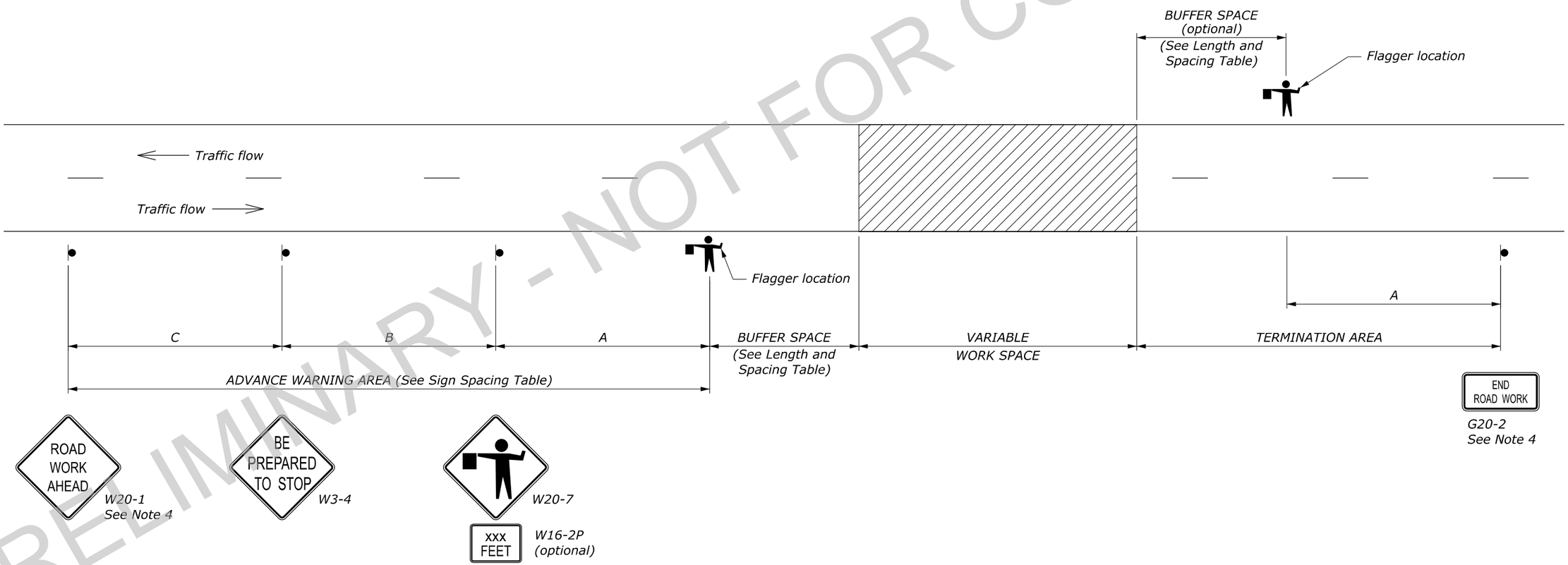

NO SCALE

U.S. DEPARTMENT OF TRANSPORTATION, FHWA
OFFICE OF FEDERAL LANDS HIGHWAY

TEMPORARY TRAFFIC CONTROL ROAD CLOSURE LAYOUT (WITH FLAGGERS)

FLH STANDARD 635-5

SPECIFICATION FP-24, FP-14

APPROVED FOR USE 2/2024

PRELIMINARY - NOT FOR CONSTRUCTION

15 May 2026 8:17 AM c:\pw_work_wfl\d0661608\Std635-5.dgn [Std 635-5]

PROJECT	SHEET NUMBER
WY NP YELL 15(2)	J.7

LENGTH AND SPACING TABLE				
APPROACH SPEED* MPH	BUFFER SPACE LENGTH FEET	CHANNELIZING DEVICE SPACING IN FEET		
		TAPER AREA	BUFFER SPACE	WORK SPACE
20	115	20	40	40
25	155	20	50	50
30	200	20	60	60
35	250	20	70	70
40	305	20	80	80
45	360	20	90	90
50	425	20	100	100
55	495	20	110	110
60	570	20	120	120
65	645	20	130	130
70	730	20	140	140

* Approach speed based on the regulatory posted speed, not the advisory speed.

SIGN SPACING TABLE			
ROAD TYPE	DISTANCE BETWEEN SIGNS IN FEET		
	A	B	C
Urban and Rural 30 mph and less	100	100	100
Urban and Rural 35 mph to 50 mph	350	350	350
Rural greater than 50 mph	500	500	500
Expressway / Freeway	1000	1500	2640

NOTE:

1. Signs are shown for one direction of travel only. Place signs similar to those depicted for the opposite direction of travel.
2. Final location and spacing of devices may be changed to fit field conditions as approved.
3. For pilot car operation, mount the PILOT CAR FOLLOW ME (G20-4) sign at a conspicuous location on the rear of vehicle. Prominently display the name of the Contractor on the pilot car.
4. If closure is completely within the project limits, eliminate the ROAD WORK AHEAD (W20-1) and END ROAD WORK (G20-2) signs.
5. For project specific minimum width, refer to the Special Contract Requirements, Section 156.
6. Do not allow equipment, materials, or vehicles to be parked or stored in the buffer space.

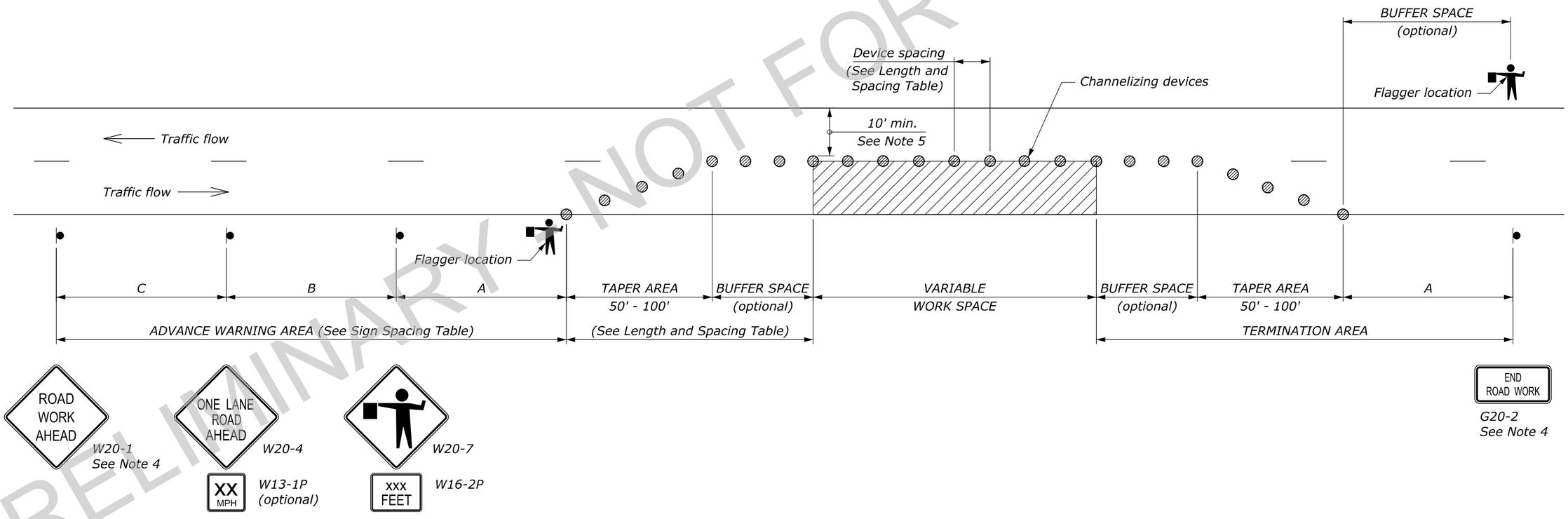

NO SCALE

U.S. DEPARTMENT OF TRANSPORTATION, FHWA
OFFICE OF FEDERAL LANDS HIGHWAY

TEMPORARY TRAFFIC CONTROL SINGLE LANE CLOSURE LAYOUT (WITH FLAGGERS)

FLH STANDARD 635-6

SPECIFICATION FP-24, FP-14

APPROVED FOR USE 2/2024

PRELIMINARY - NOT FOR CONSTRUCTION

c:\pw_work_wfl\d0661608\Std635-6.dgn [Std 635-6]
15 May 2026 8:17 AM

PROJECT	SHEET NUMBER
	J.8

LENGTH AND SPACING TABLE					
APPROACH SPEED* MPH	MINIMUM TAPER LENGTH** FEET	BUFFER SPACE LENGTH FEET	CHANNELIZING DEVICE SPACING IN FEET		
			TAPER AREA	BUFFER SPACE	WORK SPACE
20	Shoulder taper formula:	115	20	40	40
25	$L = \frac{WS^2}{180}$ for $S \leq 40$ mph	155	25	50	50
30		200	30	60	60
35	$L = \frac{WS}{3}$ for $S \geq 45$ mph	250	35	70	70
40		305	40	80	80
45	Where:	360	45	90	90
50	L = Minimum length of taper	425	50	100	100
55	W = Width of offset in feet	495	55	110	110
60	S = Numerical value of posted speed limit or 85 percentile speed prior to work in miles per hour	570	60	120	120
65		645	65	130	130
70		730	70	140	140

* Approach speed based on the regulatory posted speed, not the advisory speed.
**Lengthen taper as needed to provide minimum of three channelizing devices in taper at required spacing.

SIGN SPACING TABLE			
ROAD TYPE	DISTANCE BETWEEN SIGNS IN FEET		
	A	B	C
Urban and Rural 30 mph and less	100	100	100
Urban and Rural 35 mph to 50 mph	350	350	350
Rural greater than 50 mph	500	500	500
Expressway / Freeway	1000	1500	2640

NOTE:

1. Final location and spacing of devices may be changed to fit field conditions as approved.
2. For project specific minimum width, refer to Special Contract Requirements, Section 156.
3. If shoulder closure is completely within the project limits, eliminate the ROAD WORK AHEAD (W20-1) and END ROAD WORK (G20-2) signs.
4. Do not allow equipment, materials, or vehicles to be parked or stored in the buffer space.

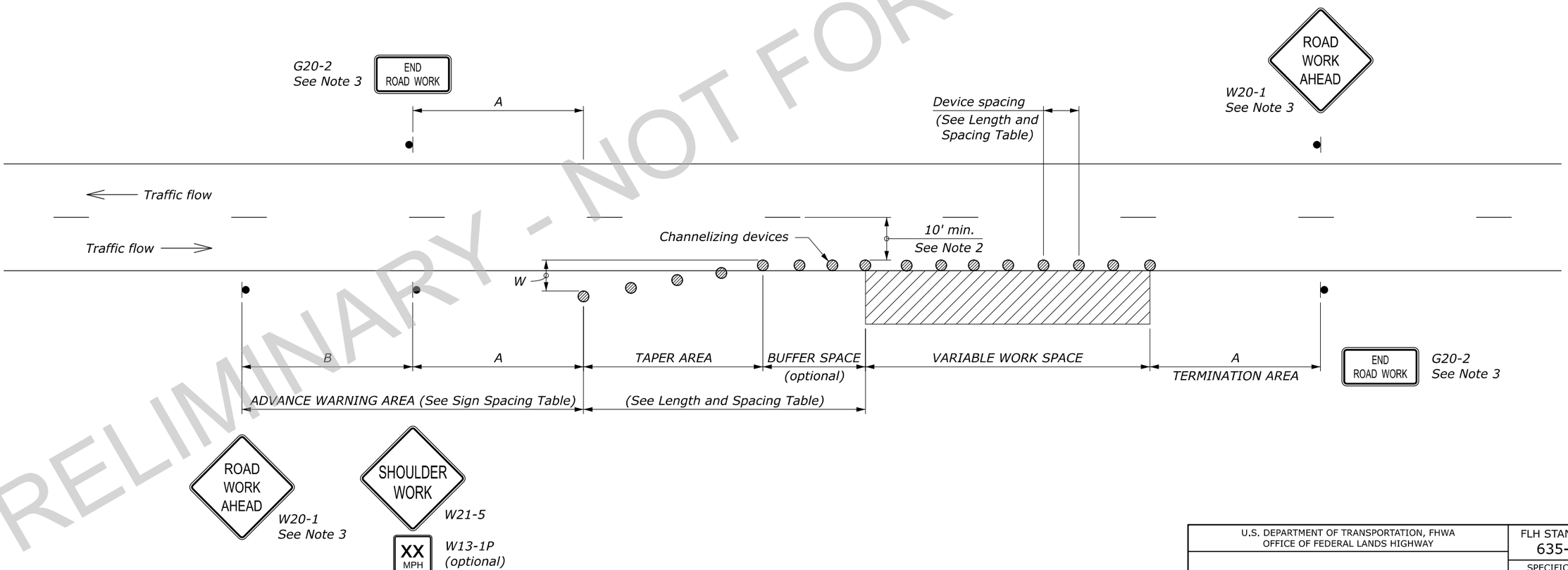

NO SCALE

U.S. DEPARTMENT OF TRANSPORTATION, FHWA OFFICE OF FEDERAL LANDS HIGHWAY	FLH STANDARD 635-10
TEMPORARY TRAFFIC CONTROL SHOULDER CLOSURE LAYOUT	SPECIFICATION FP-24, FP-14
	APPROVED FOR USE 2/2024

PRELIMINARY - NOT FOR CONSTRUCTION

15 May 2026 8:17 AM c:\pw_work_wfl\d0661608\Std635-10.dgn [Std 635-10]

PROJECT	SHEET NUMBER
WY NP YELL 15(2)	J.9

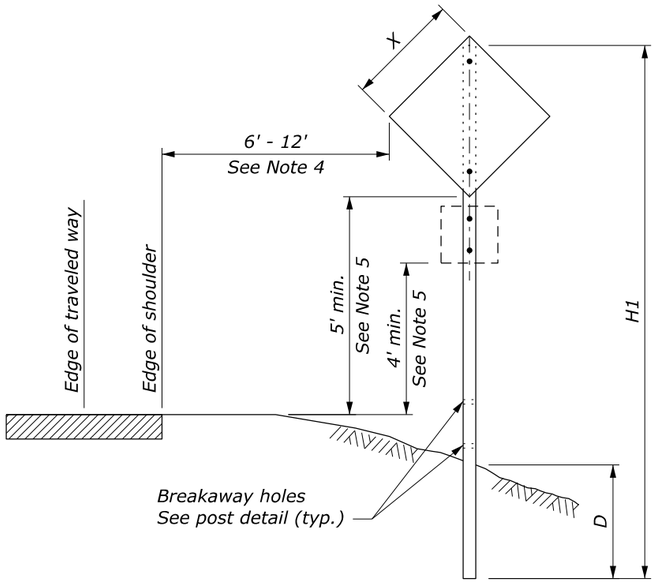

SINGLE POST SIGN

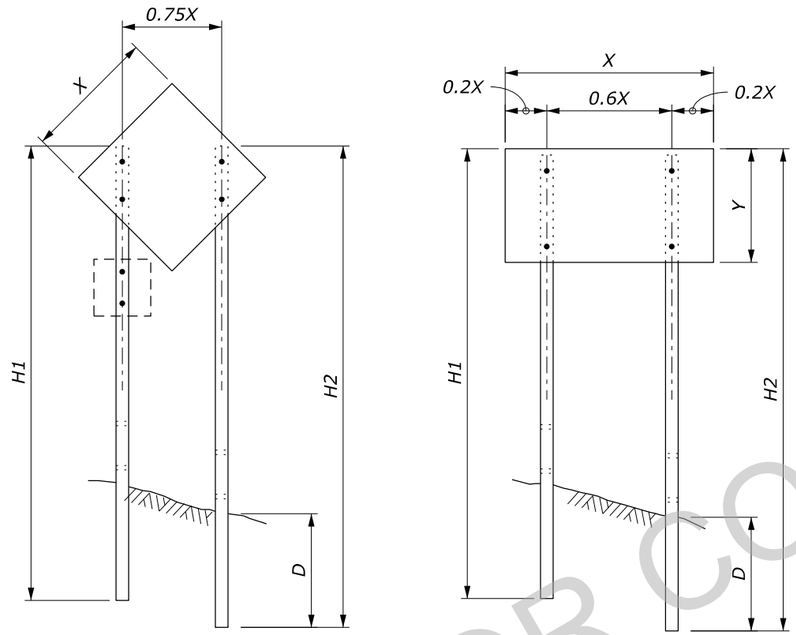

TWO POST SIGN

NOTE:

1. Attach sign panels with a minimum of two ¼" diameter bolts per post.
2. H1 and H2 = Overall post length. Select post lengths to fit field conditions.
3. D = Post embedment depth for average soil conditions.
4. In areas where lateral distance is limited, a minimum lateral offset of 2 ft may be used. In areas with curbs, a minimum lateral distance of 1 ft behind the face of the curb may be used.
5. In pedestrian locations, or in areas with obstructed views, use 7 ft minimum mounting height for main sign and 6 ft minimum mounting height for secondary sign.
6. Use 7 ft minimum spacing between posts for sign posts 6" x 6" or larger.
7. State standards may be used as an alternative if approved.

WOOD POST SELECTION TABLE

WIDTH "X"	AREA (SQFT)	NUMBER OF POSTS	POST SIZE (INCH)	D (INCH)	HOLE SIZE (INCH)
Diamond ≤ 36" Other Shapes ≤ 48"	< 10	1	4 x 4	36	0
		1	4 x 6	48	1.5
Diamond ≤ 48"	10 - 20	1	6 x 6	48	2
Diamond ≤ 48" Other Shapes ≤ 12'	10 - 20	2	4 x 4	36	0
	20 - 50	2	4 x 6	48	1.5
> 13'	50 - 65	2	6 x 6	48	2
12' - 16'	50 - 65	3	4 x 6	48	1.5
> 17'	65 - 95	4	4 x 6	48	1.5
> 30'	65 - 95	3	6 x 6	48	2

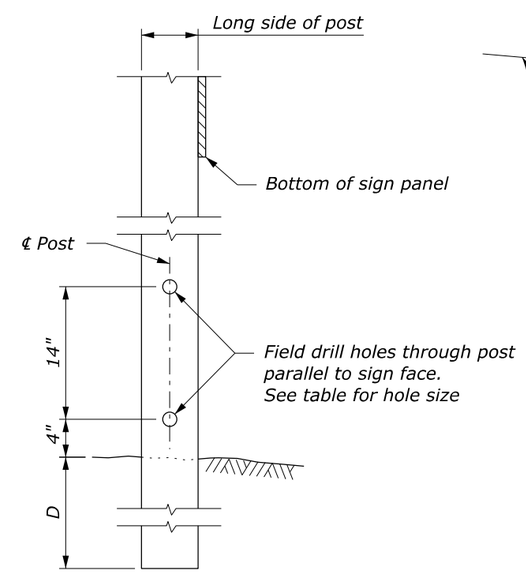

POST DETAIL

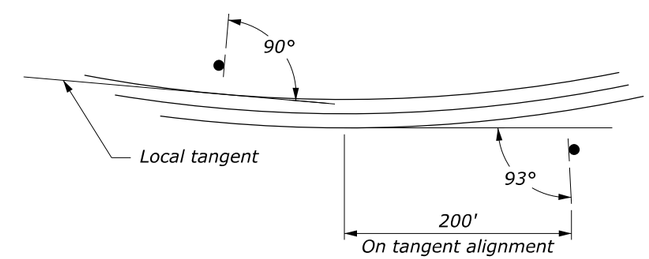

SIGN INSTALLATION ANGLE

NO SCALE

U.S. DEPARTMENT OF TRANSPORTATION, FHWA
OFFICE OF FEDERAL LANDS HIGHWAY

TEMPORARY TRAFFIC CONTROL SIGN INSTALLATION WOOD POSTS

FLH STANDARD 635-14

SPECIFICATION FP-24, FP-14

APPROVED FOR USE 2/2024

PRELIMINARY - NOT FOR CONSTRUCTION

c:\pw_work_wfl\d0661608\Std635-14.dgn [Std 635-14]
15 May 2026 8:17 AM

PROJECT	SHEET NUMBER
WY NP YELL 15(2)	K.2

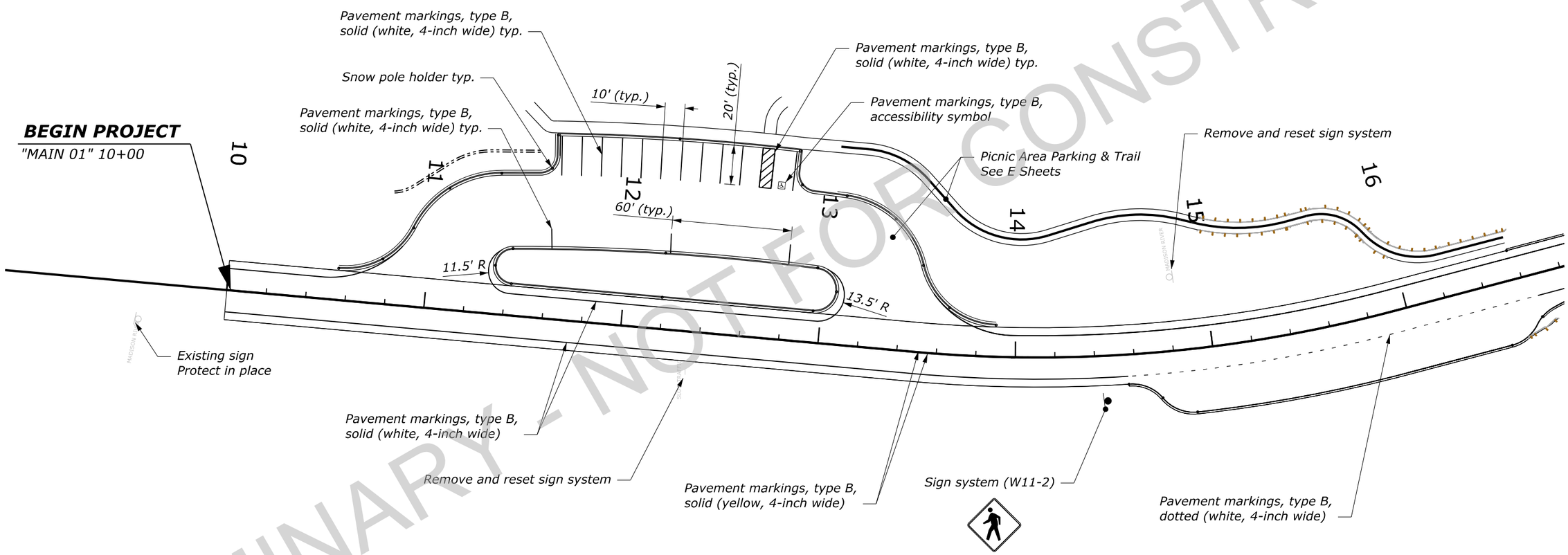

PRELIMINARY - NOT FOR CONSTRUCTION

PERMANENT TRAFFIC CONTROL

c:\pw_work_wfl\d0713925\yell15-2_PTC.dgn [ALL_MAIN_01 - PTC 1 (Sheet)]
15 May 2026 8:12 AM

PROJECT	SHEET NUMBER
WY NP YELL 15(2)	K.3

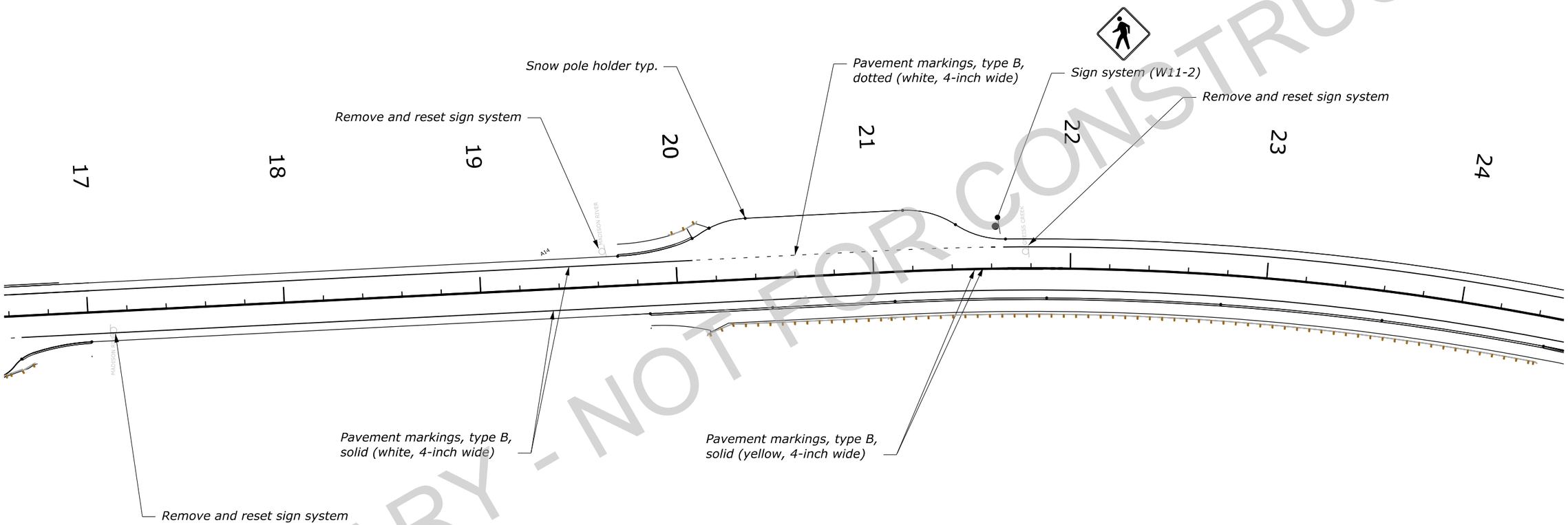

PRELIMINARY - NOT FOR CONSTRUCTION

PERMANENT TRAFFIC CONTROL

c:\pw_work_wfl\d0713925\yell15-2_PTC.dgn [ALI_MAIN_01 - PTC 2 (Sheet)]
15 May 2026 8:12 AM

PROJECT	SHEET NUMBER
WY NP YELL 15(2)	K.4

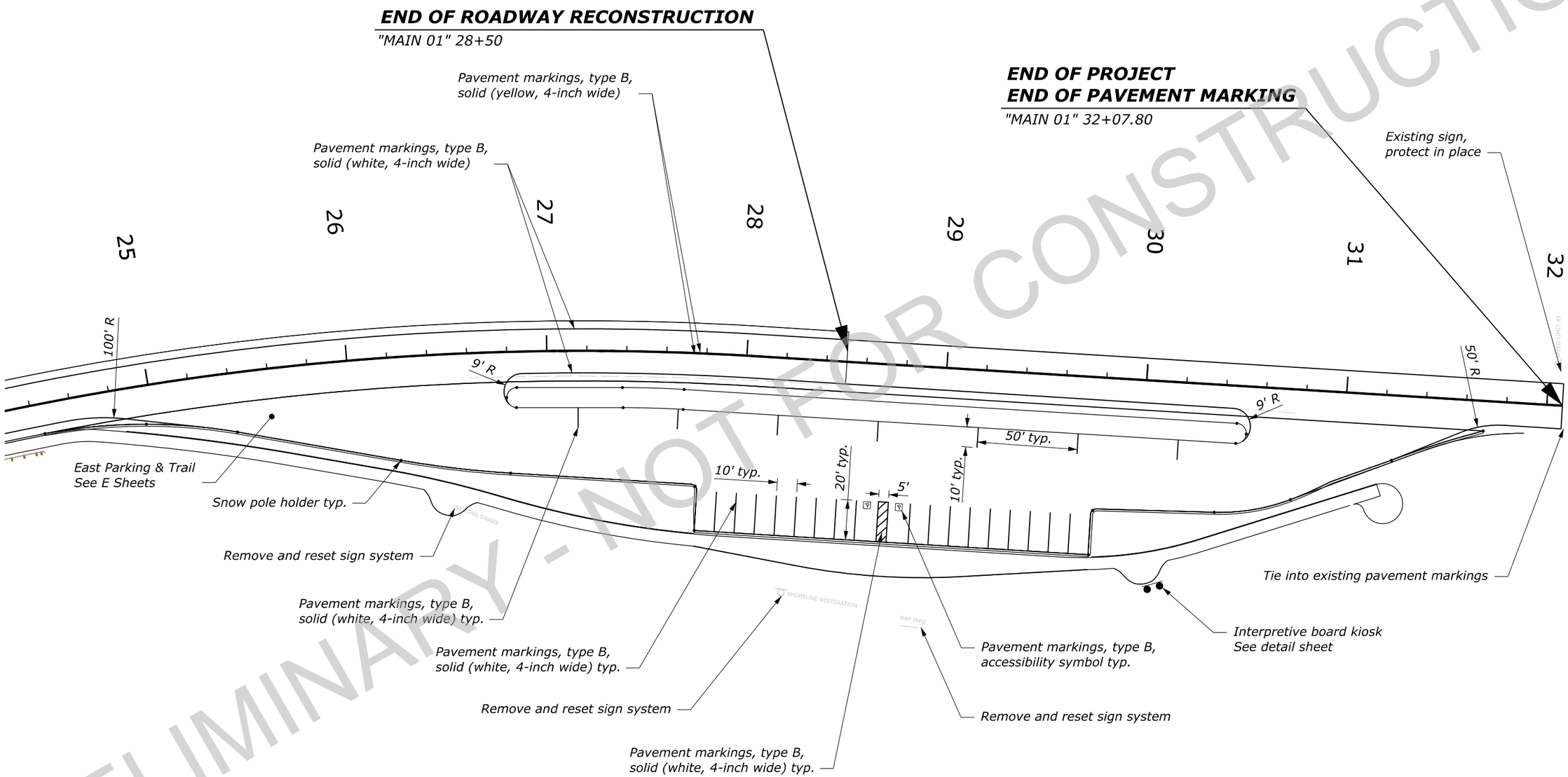

PRELIMINARY - NOT FOR CONSTRUCTION

PERMANENT TRAFFIC CONTROL

c:\pw_work_wff\d0713923\yell15-2_PTC.dgn [ALL_MAIN_01 - PTC 3 (Sheet)]
15 May 2026 8:12 AM

PROJECT	SHEET NUMBER
WY NP YELL 15(2)	K.5

BREAKAWAY HOLE SELECTION TABLE

POST DIAMETER	Breakaway hole diameter (mm)
6"	1¾"
8"	1¾"
9"	2½"
10"	3"
12"	4"

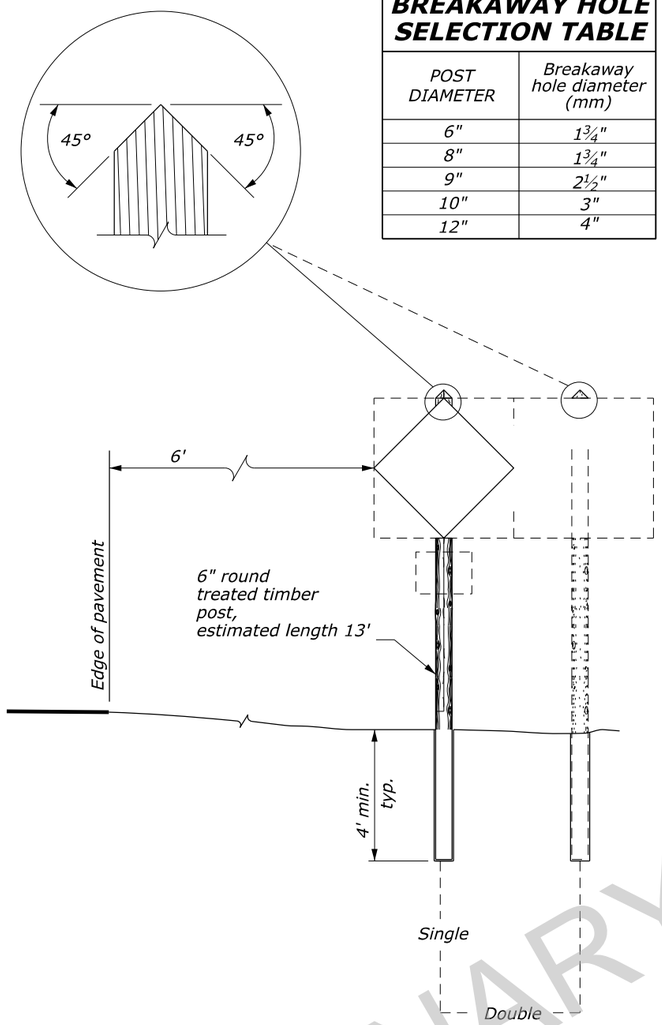

SIGN POST INSTALLATION

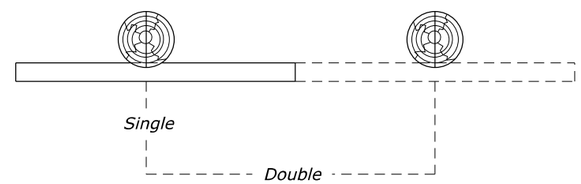

PLAN

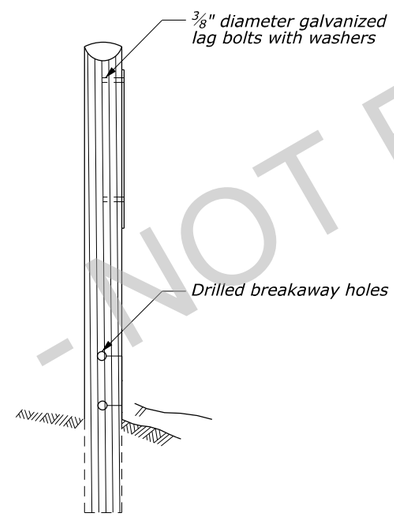

PROFILE

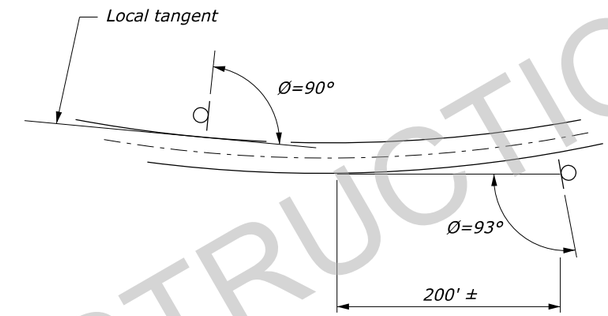

On tangent alignment Ø=93°

SIGN INSTALLATION ANGLE

NOTE:

1. Attach sign panels with a minimum of 2- ⅜-inch diameter bolts per post.
2. Paint the back of sign panels

NO SCALE

SIGN POST AND INSTALLATION DETAILS

PRELIMINARY - NOT FOR CONSTRUCTION

c:\pw_work_wff\d0696551\yell15-2_details_Sheets.dgn [Sign Post and Installation Details]
4 May 2026 9:01 AM

PROJECT	SHEET NUMBER
WY NP YELL 15(2)	K.6

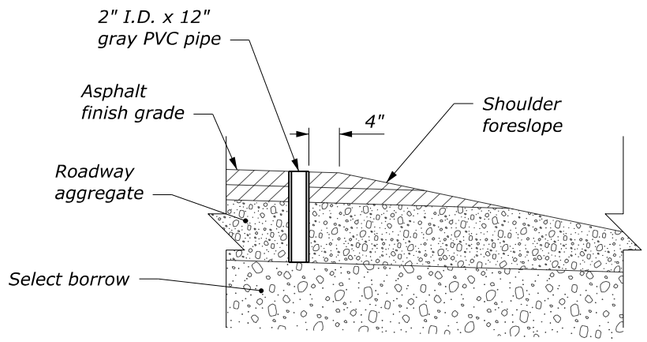

SNOW POLE HOLDER INSTALLATION AT ASPHALT EDGE OF PAVEMENT

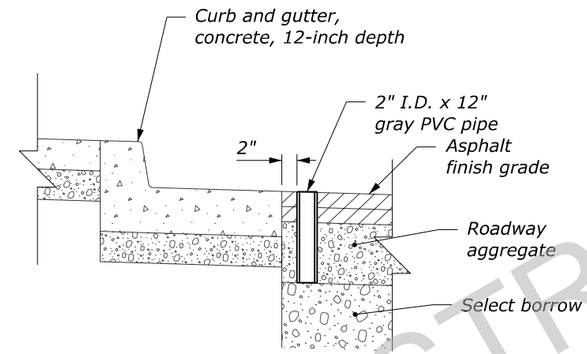

SNOW POLE HOLDER INSTALLATION IN FRONT OF CONCRETE CURB AND GUTTER

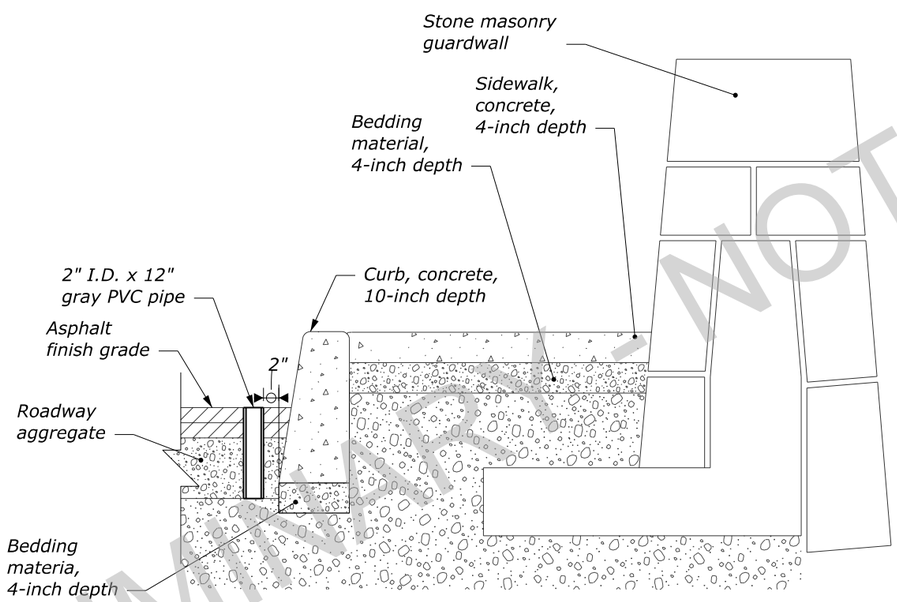

SNOW POLE HOLDER INSTALLATION IN FRONT OF 20-INCH DEPTH CONCRETE CURB

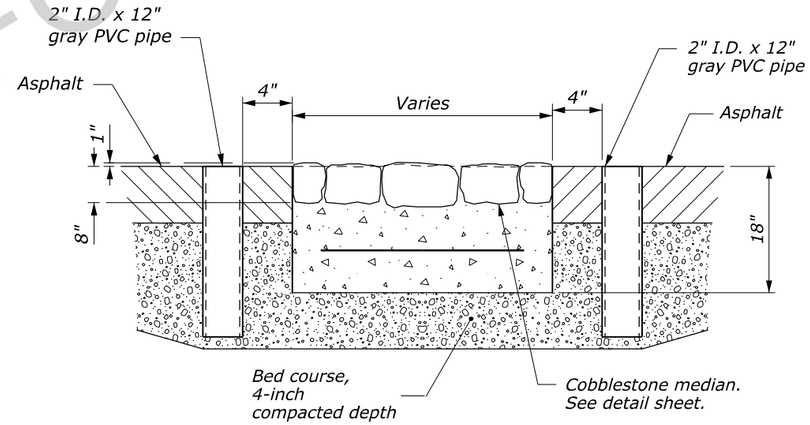

SNOWPOLE HOLDER DETAIL (ADJACENT TO COBBLESTONE MEDIAN)

NO SCALE

SNOWPOLE HOLDER INSTALLATION DETAILS

PRELIMINARY - NOT FOR CONSTRUCTION

c:\pw_work_wfl\d0696551\yell15-2_details_Sheets.dgn [Snowpole Holder Installation Details]
4 May 2026 9:01 AM

PROJECT	SHEET NUMBER
WY NP YELL 15(2)	K.7

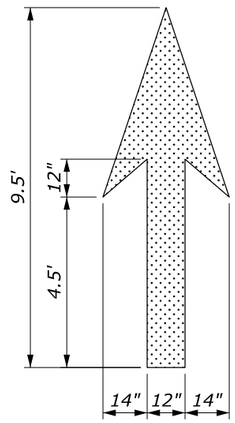

THROUGH LANE-USE ARROW

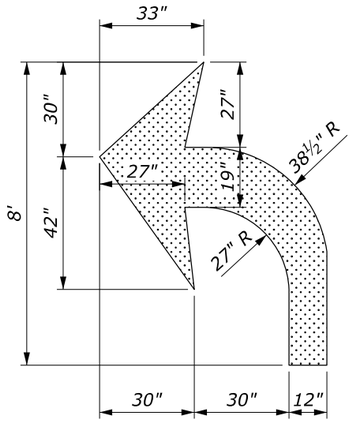

TURN LANE-USE ARROW

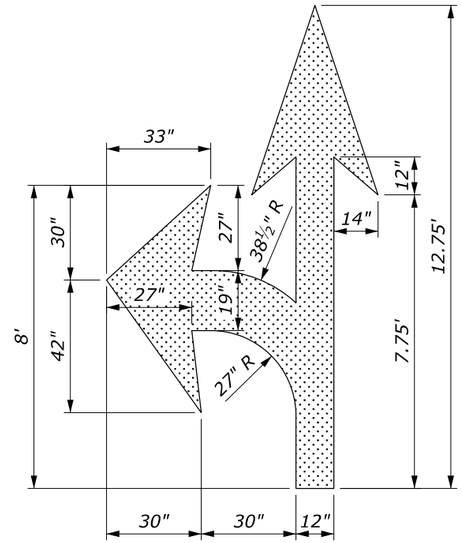

TURN AND THROUGH LANE-USE ARROW

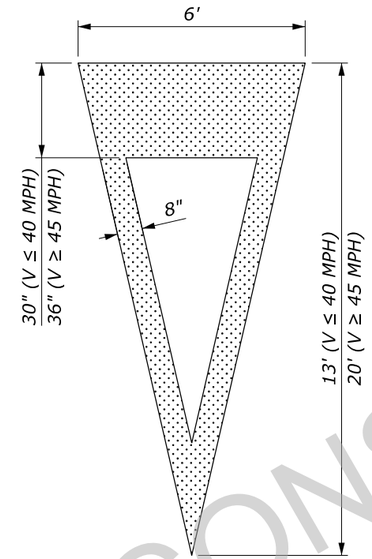

YIELD AHEAD TRIANGLE SYMBOL

NOTE:

1. *Place pavement word and symbol markings in accordance with the "Manual on Uniform Traffic Control Devices" (MUTCD), current edition.*
2. *Use the current edition of the "Standard Highway Signs" to size all letters, numerals and symbols.*
3. *The Accessibility Parking Space marking only includes the accessibility symbol unless a border is shown in the Striping Plans.*

PAVEMENT MARKING AREAS	
TYPE	SQFT
Through Lane-Use Arrow	12
Turn Lane-Use Arrow	16
Turn and Through Lane-Use Arrow	26
Yield Ahead Triangle (V≤40 MPH)	26
Yield Ahead Triangle (V≥45 MPH)	37
Accessibility Marking (symbol only)	2
Accessibility Marking w/ border (White)	5
Accessibility Marking w/ border (Blue)	9
AHEAD Word Marking	30
ONLY Word Marking	21
SCHOOL Word Marking	33
STOP Word Marking	22
YIELD Word Marking	24

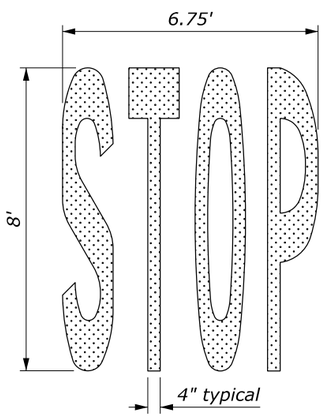

"STOP" WORD MARKING

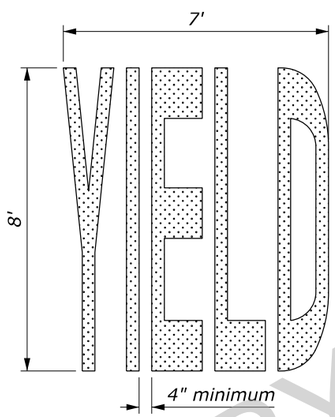

"YIELD" WORD MARKING

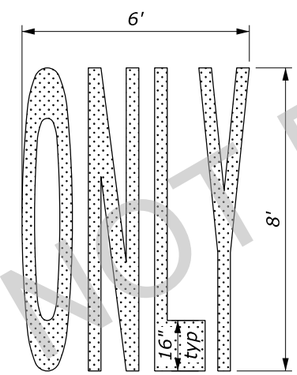

"ONLY" WORD MARKING

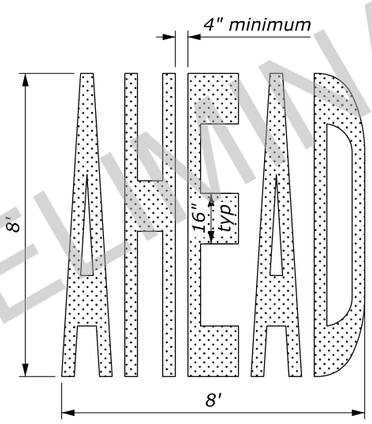

"AHEAD" WORD MARKING

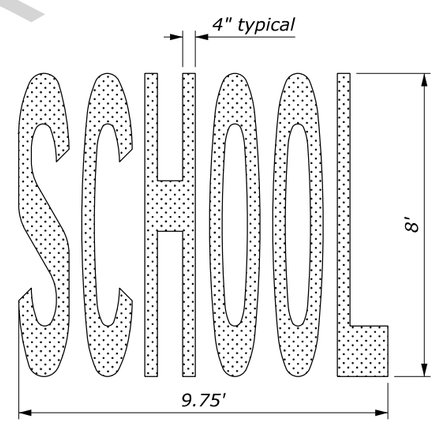

"SCHOOL" WORD MARKING

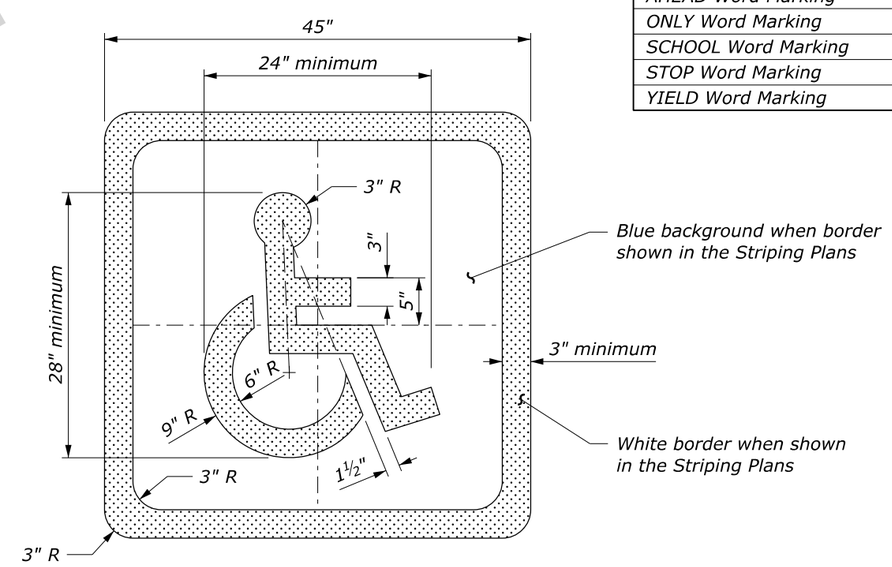

ACCESSIBILITY PARKING SPACE MARKING

NO SCALE

U.S. DEPARTMENT OF TRANSPORTATION, FHWA
OFFICE OF FEDERAL LANDS HIGHWAY

PAVEMENT MARKINGS SYMBOLS AND WORDS

WFL STANDARD W634-1

SPECIFICATION FP-24, FP-14

APPROVED FOR USE 9/2024

PRELIMINARY - NOT FOR CONSTRUCTION

c:\pw_work_wfl\d0713925\W634-1.dgn [Std W634-1]
15 May 2026 8:14 AM

PROJECT	SHEET NUMBER
	K.8

NOTE:

1. Place edge line pavement markings at asphalt/concrete curb interface when curb is present.
2. Paint centerline pavement markings on curves with curve widening "w" to achieve equal lane widths within the roadway. Maintain a constant shoulder width "s" throughout the curve widening area. See staking details for curve widening transition locations.
3. Typical pavement marking widths are shown. Use wider pavement markings when shown on the plans or when required by the maintaining agency.

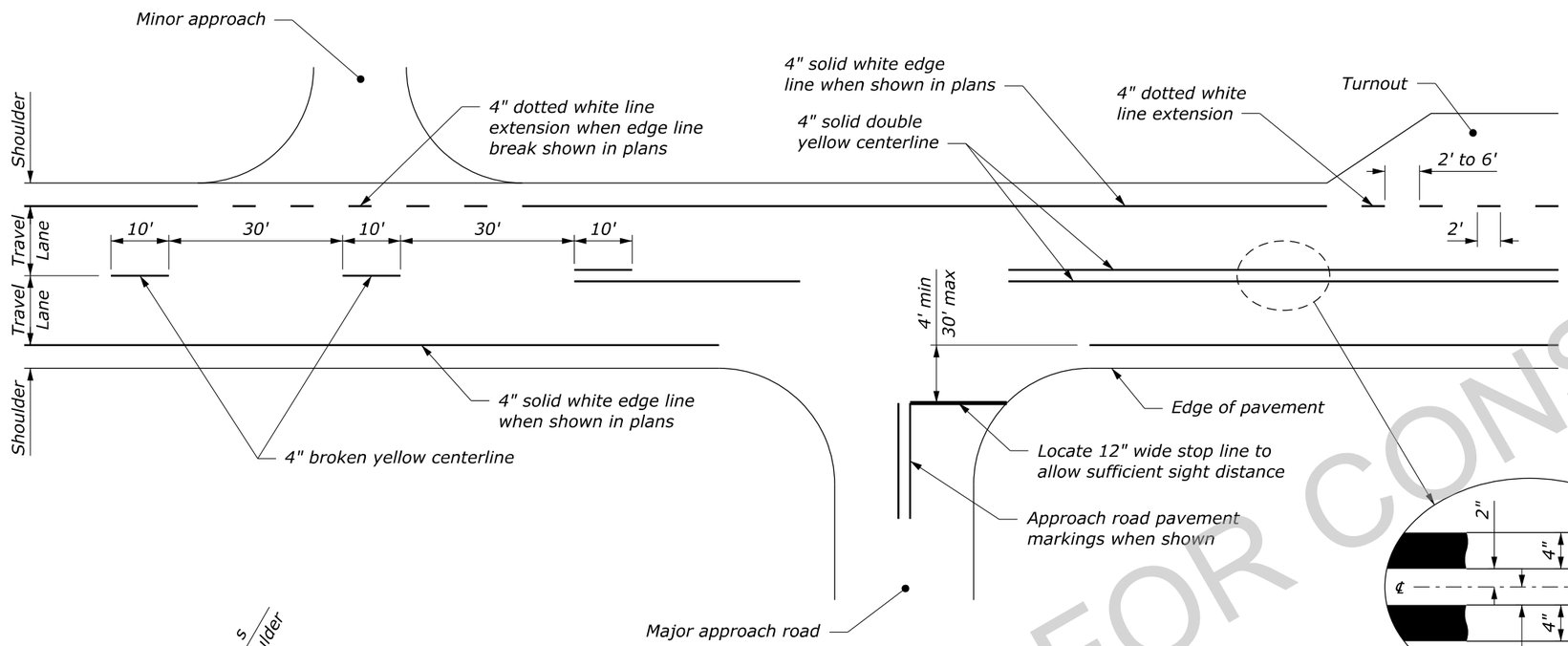

TYPICAL PAVEMENT MARKING APPLICATIONS

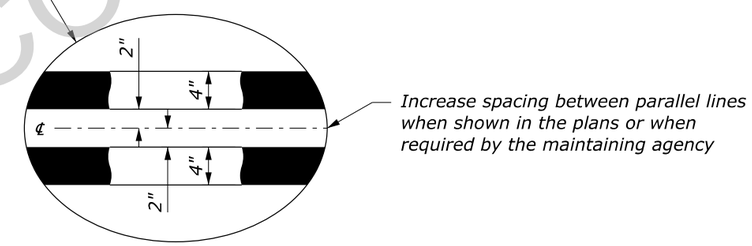

CENTERLINE DETAIL

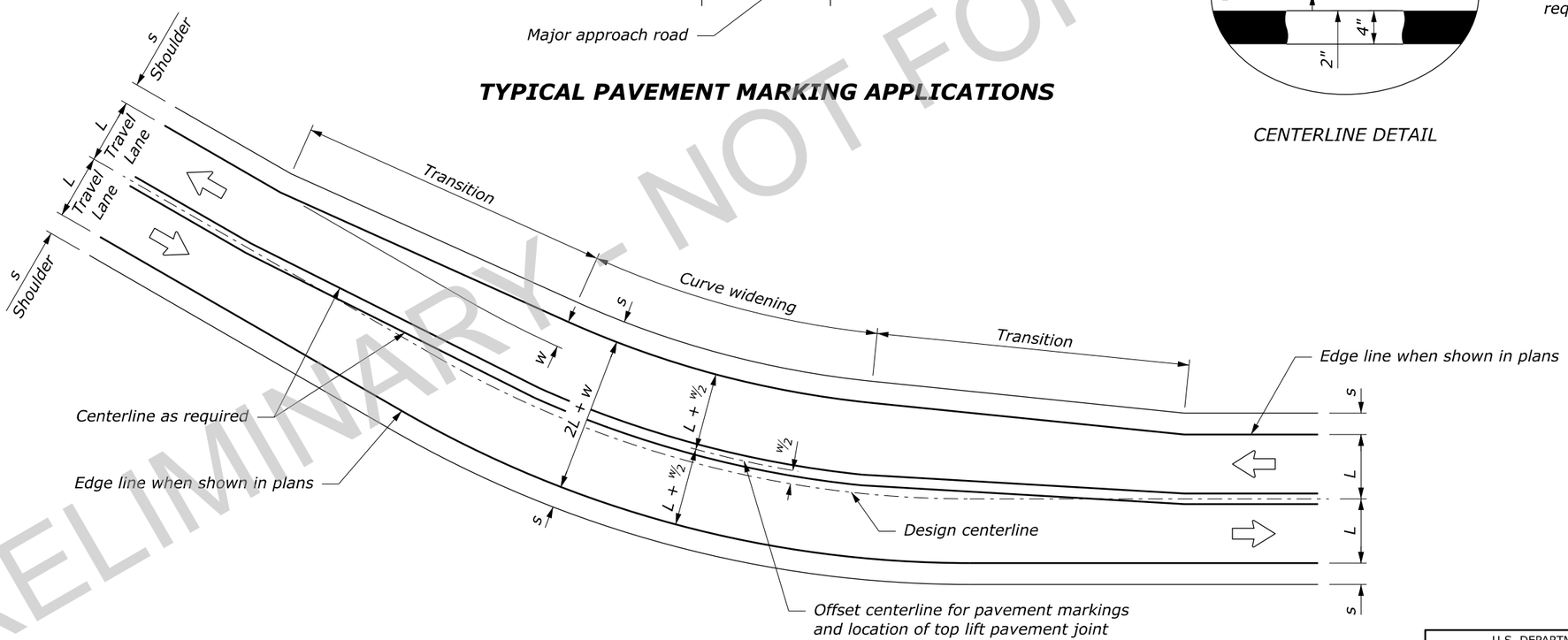

CENTERLINE MODIFICATION FOR CURVES WITH WIDENING APPLIED ON INSIDE

See Note 2 for treatment of curves when widening "w" is split equally on both sides of centerline

NO SCALE

U.S. DEPARTMENT OF TRANSPORTATION, FHWA OFFICE OF FEDERAL LANDS HIGHWAY	WFL STANDARD W634-2
LINEAR PAVEMENT MARKINGS	SPECIFICATION FP-24, FP-14
	APPROVED FOR USE 9/2024

PRELIMINARY - NOT FOR CONSTRUCTION

c:\pw_work_wfl\d0713925\W634-2.dgn [Std W634-2]
15 May 2026 8:14 AM

PROJECT	SHEET NUMBER
WY NP YELL 15(2)	L.1

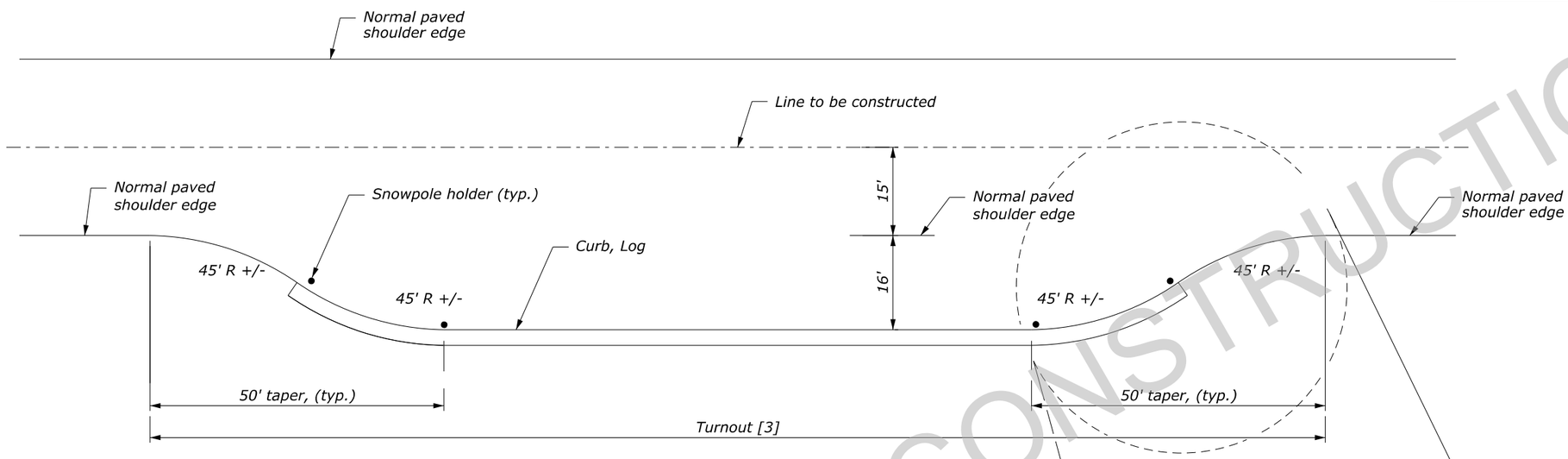

TURNOUT LAYOUT DETAIL

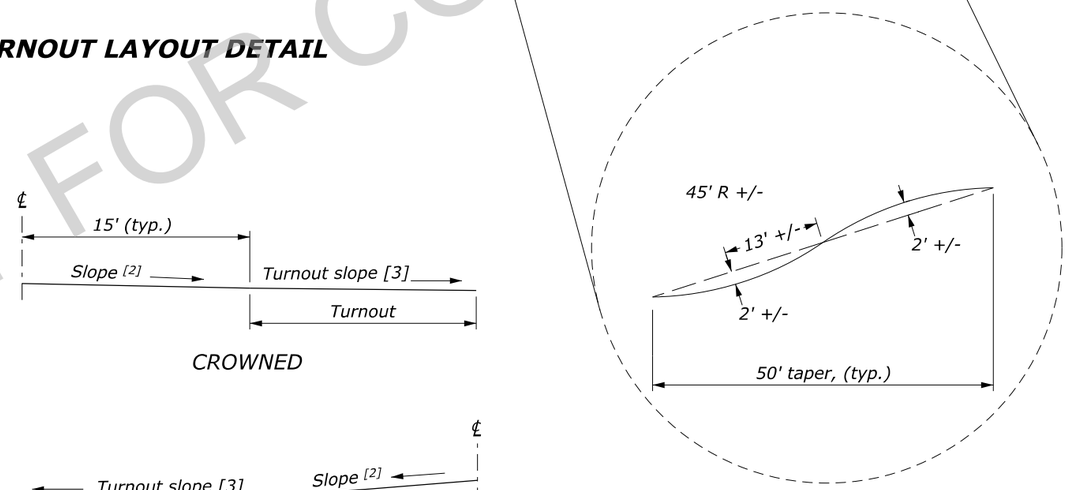

LAYOUT OF CURVE DETAIL

CROWNED

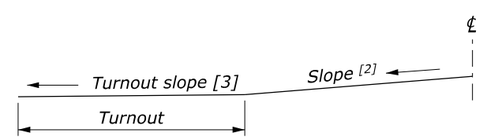

SUPER-ELEVATED LT

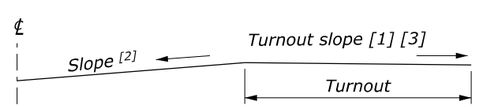

SUPER-ELEVATED RT

TURNOUT SECTION DETAILS

NO SCALE

NOTE:

1. Pavement structure for turnouts is the same as the adjacent roadway. See Section C for details and Sheet D.2 for quantities.

FOOTNOTE:

[1] Maximum rollover between normal paved shoulder edge and turnout is limited to 8%. Adjust turnout superelevation as directed by the CO.

[2] Superelevate roadway on curves at the rate 'e' as indicated on the Plan and Profile curve data.

[3] Turnout slope varies, see Turnout Dimensions table, this sheet.

STANDARD TURNOUT DETAIL

PRELIMINARY - NOT FOR CONSTRUCTION

21 April 2026 11:36 AM c:\pw_work_wff\d0696551\yell15-2_details_Sheets.dgn [Standard Turnout Detail]

PROJECT	SHEET NUMBER
WY NP YELL 15(2)	L.2

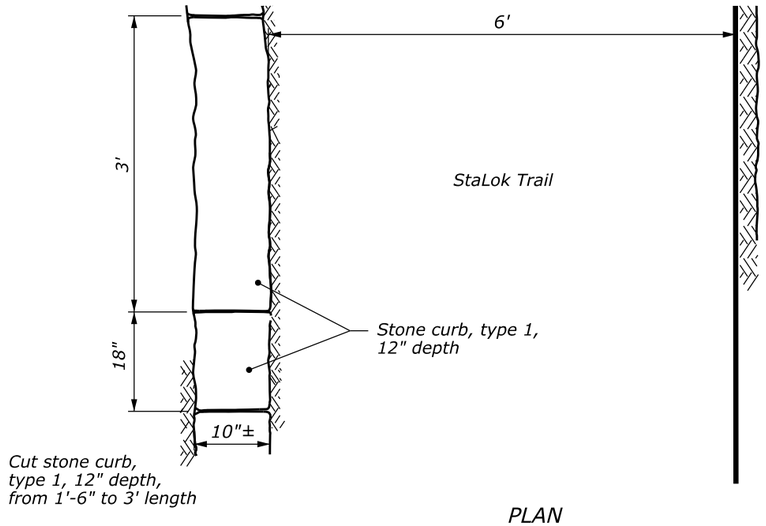

PLAN

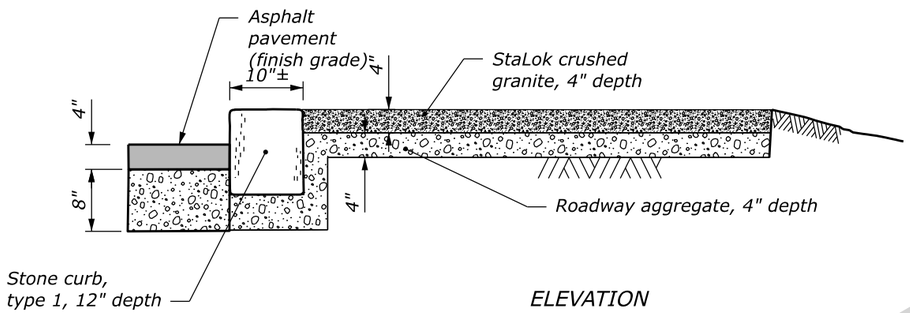

ELEVATION

STALOK TRAIL WITH STONE CURB DETAIL

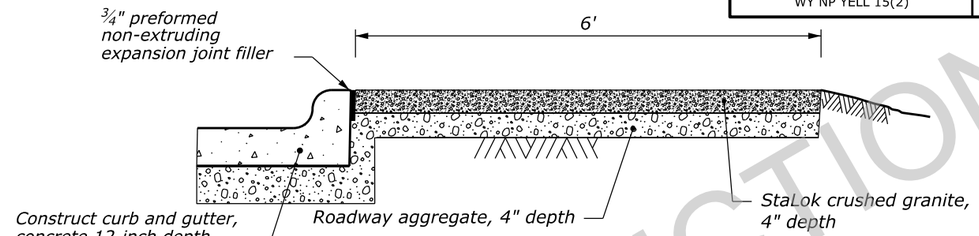

STALOK TRAIL WITH CURB AND GUTTER DETAIL

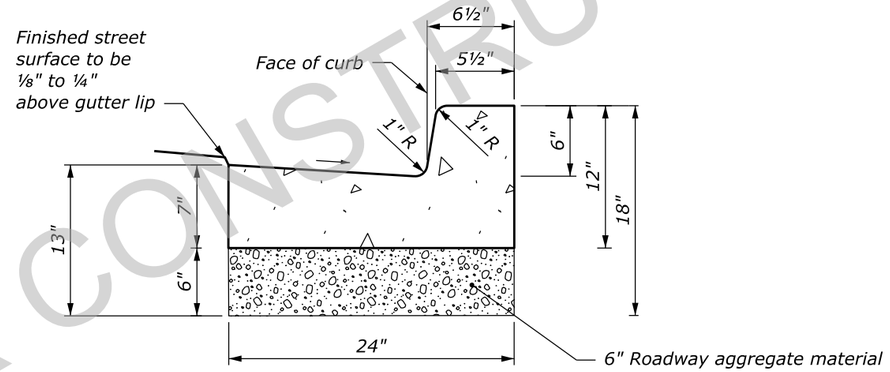

CURB AND GUTTER, CONCRETE, 12-INCH DEPTH

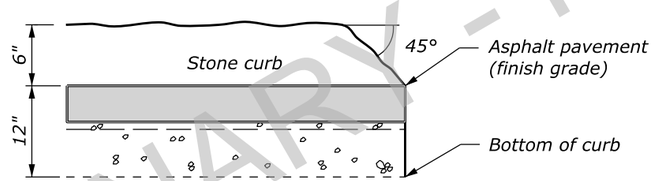

STONE CURB END TREATMENT DETAIL

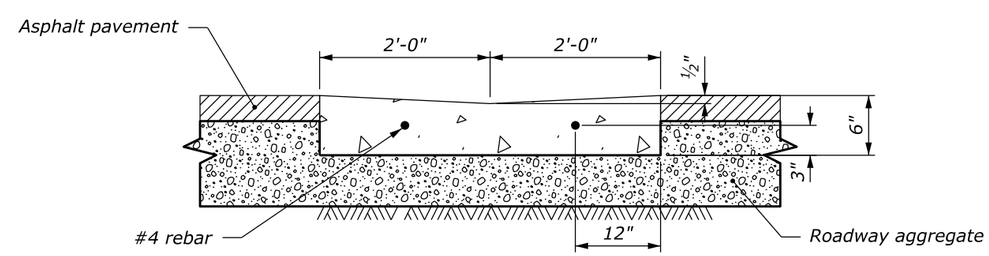

GUTTER, CONCRETE

NOTE:

1. Provide stone curbing 18-inch to 24-inch in length in curve radii less than 40-feet. Cut stone curb to lengths of 18-inch to 36-inch in all other areas.
2. Cut stone edging to lengths of 16-inch to 36-inch.
3. Provide 0.5-inch to 1.5-inch mortar joints between stones.
4. Chiseled stone finish on all exposed sides of stone curb and stone edging.

NO SCALE

CURB & GUTTER DETAILS

PRELIMINARY - NOT FOR CONSTRUCTION

C:\Users\edward.dumb\Desktop\Madison River Bridge\70% QCV\1% CFT Submittal\72 % Partner Submittal\DETAIL SHEET\wall15-2 details Sheets.dgn [StaLok Trail Details]
22 April 2026 9:40 AM

PROJECT	SHEET NUMBER
WY NP YELL 15(2)	L.3

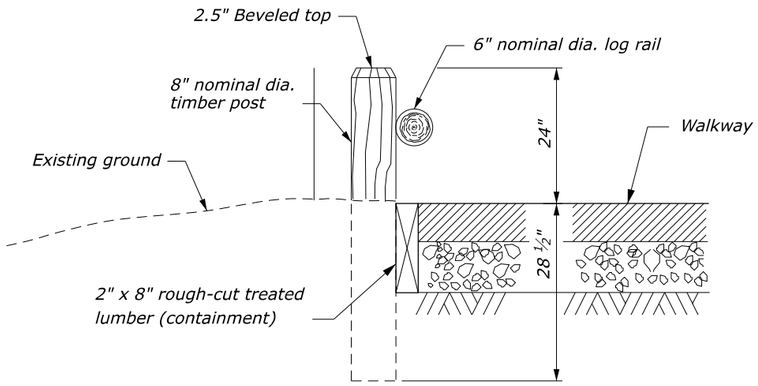

TYPICAL PROFILE VIEW

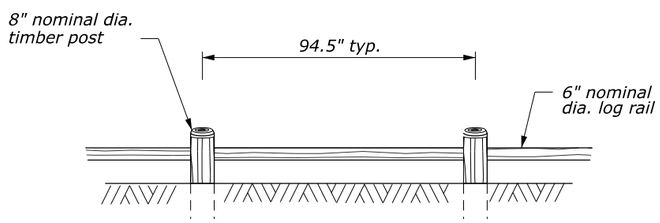

TYPICAL ELEVATION VIEW

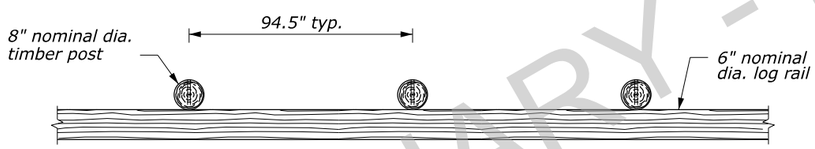

TYPICAL PLAN VIEW

PEDESTRIAN RAILING, TYPE 2 POST AND RAIL DETAILS

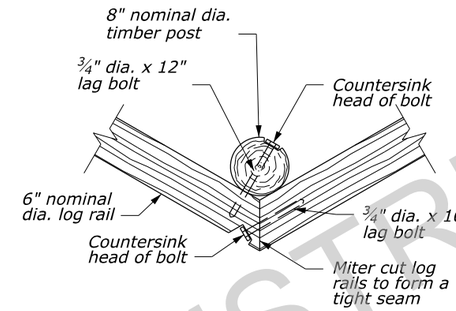

NON-SQUARE ANGLE CONNECTION PLAN VIEW

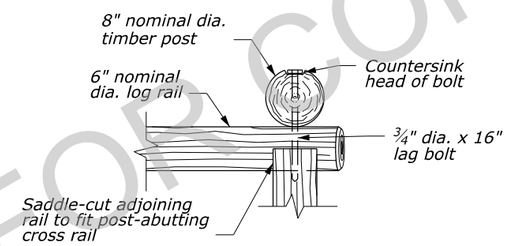

90° INSIDE ANGLE CONNECTION PLAN VIEW

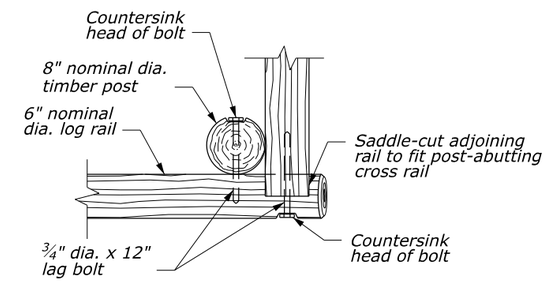

90° OUTSIDE ANGLE CONNECTION PLAN VIEW

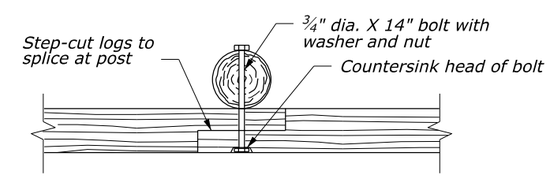

STRAIGHT RUN RAIL CONNECTION PLAN VIEW

RAIL CONNECTION DETAILS

NO SCALE

24-INCH PEDESTRIAN RAIL DETAILS

PRELIMINARY - NOT FOR CONSTRUCTION

c:\pw_work_wfl\d0696551\yell15-2_details_Sheets.dgn [24-Inch Pedestrian Rail Details]
21 April 2026 11:36 AM

PROJECT	SHEET NUMBER
WY NP YELL 15(2)	L.4

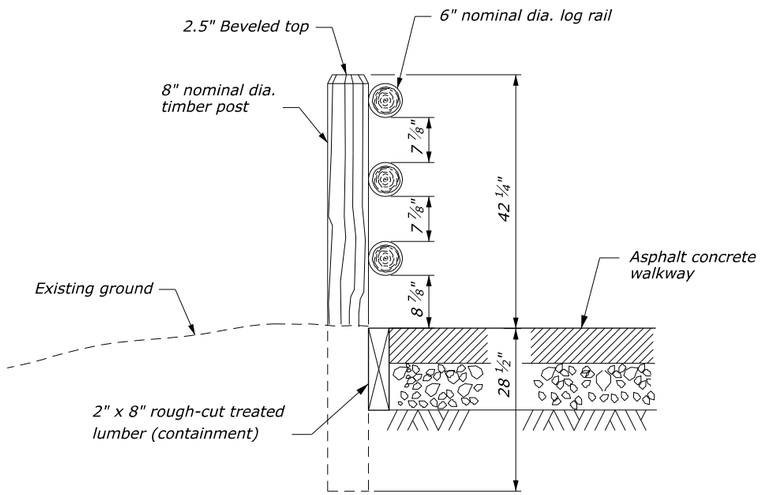

TYPICAL PROFILE VIEW

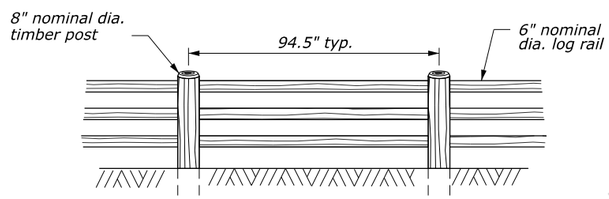

TYPICAL ELEVATION VIEW

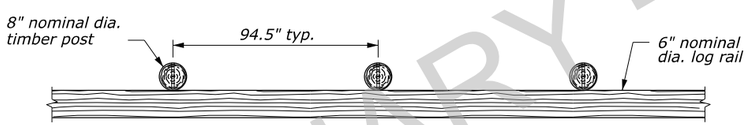

TYPICAL PLAN VIEW

PEDESTRIAN RAILING, TYPE 2
POST AND RAIL DETAILS

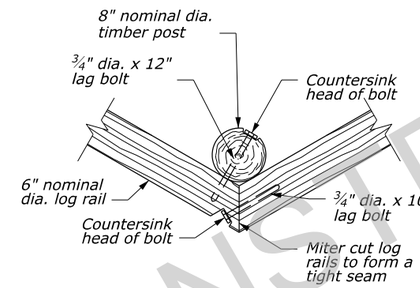

NON-SQUARE ANGLE CONNECTION
PLAN VIEW

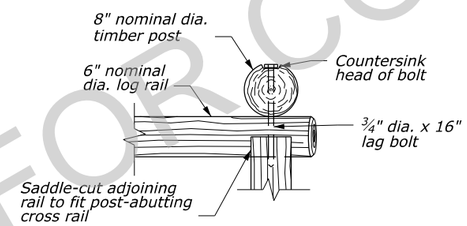

90° INSIDE ANGLE CONNECTION
PLAN VIEW

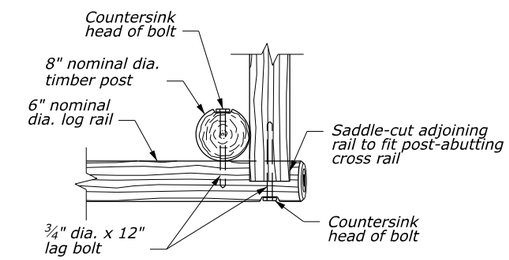

90° OUTSIDE ANGLE CONNECTION
PLAN VIEW

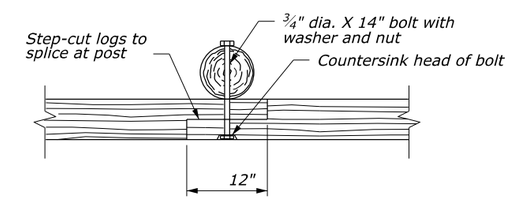

STRAIGHT RUN RAIL CONNECTION
PLAN VIEW

RAIL CONNECTION DETAILS

NO SCALE

42-INCH PEDESTRIAN RAIL DETAILS

PRELIMINARY - NOT FOR CONSTRUCTION

c:\pw_work_wff\d0696551\yell15-2_details_Sheets.dgn [42-Inch Pedestrian Rail Details]
21 April 2026 11:36 AM

PROJECT	SHEET NUMBER
WY NP YELL 15(2)	L.5

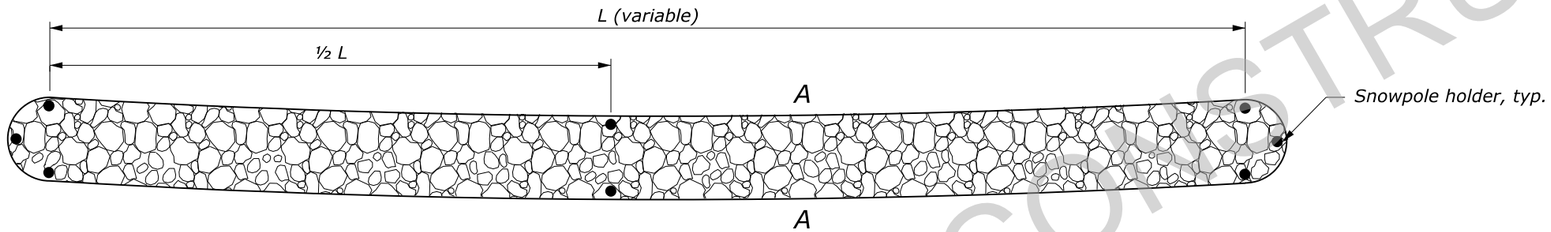

COBBLESTONE MEDIAN LAYOUT DETAIL

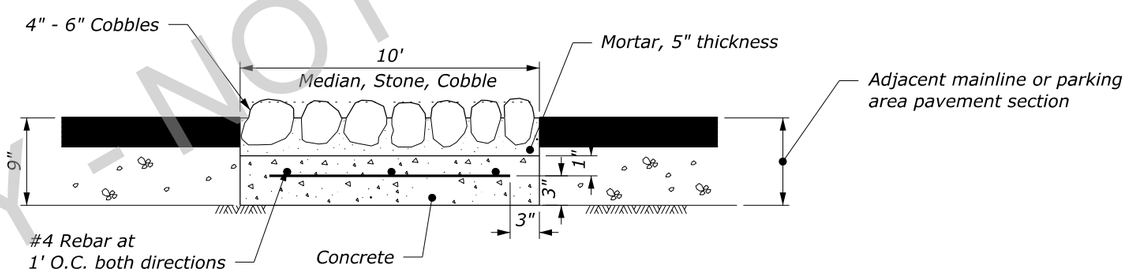

SECTION A-A

COBBLESTONE MEDIAN

PRELIMINARY - NOT FOR CONSTRUCTION

21 April 2026 11:36 AM c:\pw_work_wdf\d0596551\yell15-2_details_Sheets.dgn [Cobblestone Median Detail]

COBBLESTONE MEDIAN DETAIL

PROJECT	SHEET NUMBER
WY NP YELL 15(2)	L.6

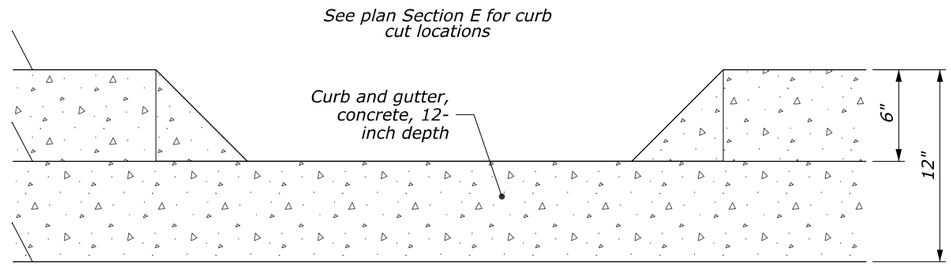

CURB ELEVATION VIEW

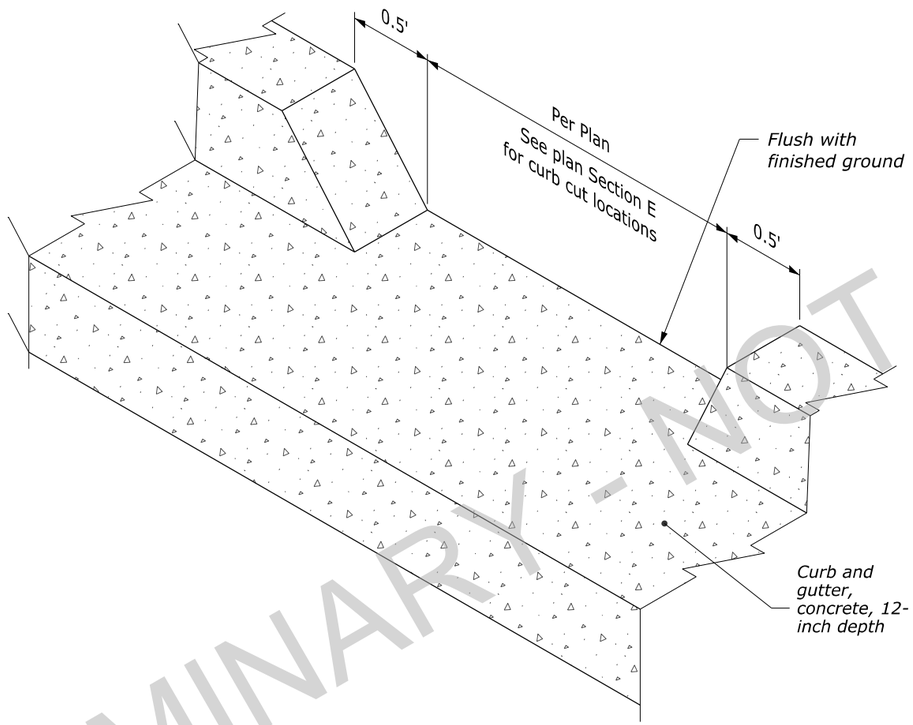

CURB AND GUTTER ISOMETRIC VIEW

CURB AND GUTTER CUT DETAIL

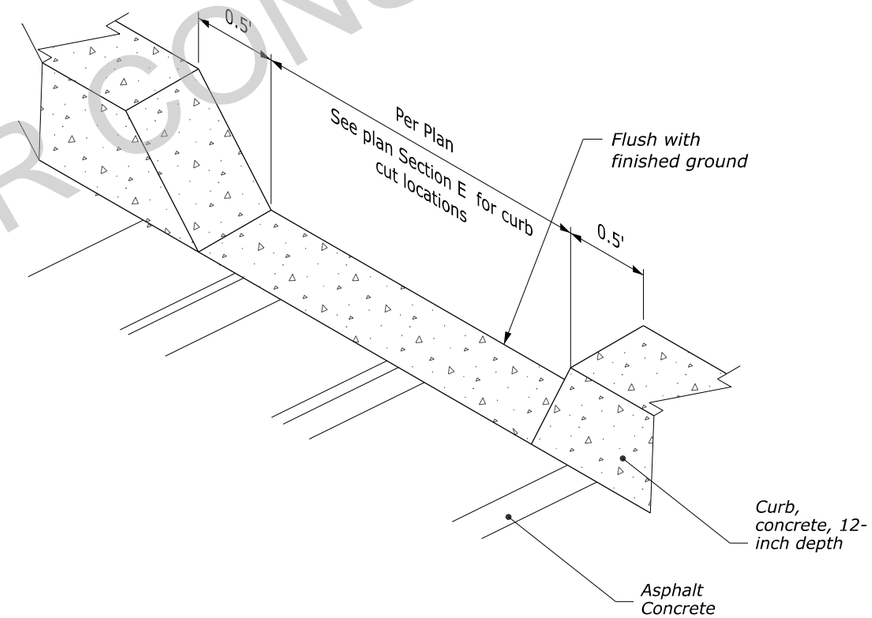

CURB ISOMETRIC VIEW

CURB CUT DETAIL

NO SCALE

CURB CUT DETAILS

PRELIMINARY - NOT FOR CONSTRUCTION

c:\pw_work_wff\d0696551\yell15-2_details_Sheets.dgn [Curb Cut Details]
21 April 2026 11:36 AM

PROJECT	SHEET NUMBER
WY NP YELL 15(2)	L.7

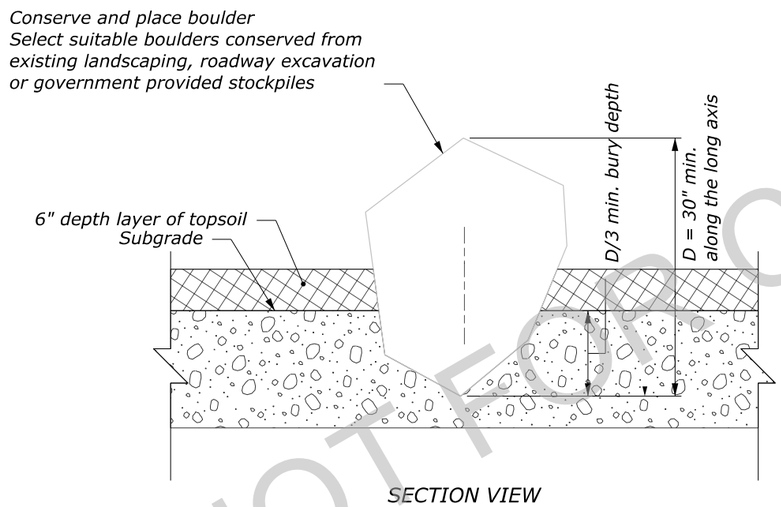

SECTION VIEW

PRELIMINARY - NOT FOR CONSTRUCTION

21 April 2026 11:36 AM c:\pw_work_wff\d0696551\yell15-2_details_Sheets.dgn [Landscaping Boulder Detail]

LANDSCAPING BOULDER DETAIL

PROJECT	SHEET NUMBER
WY NP YELL 15(2)	L.8

NOTES:

1. The maximum cross slopes of ramp landings must not exceed 2% in any direction.
2. Use a coarse broom finish running perpendicular to the slope to create a slip resistant surface on concrete ramp surfaces, exclusive of the detectable warning fields.

   Construct curb ramp perpendicular to the curb.
3. Avoid skewing the ramp face.
4. Construct ramp transitions between walks, gutters, or streets that are flush and free of abrupt vertical changes.
5. Locate drainage inlets and manholes outside of ramp walking surfaces or landings.
6. Mirror details as needed to match design plan.

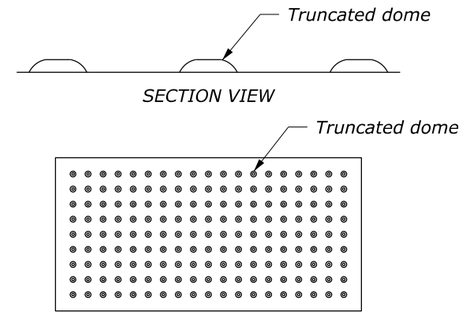

DETECTABLE WARNING FIELD WITH TRUNCATED DOMES

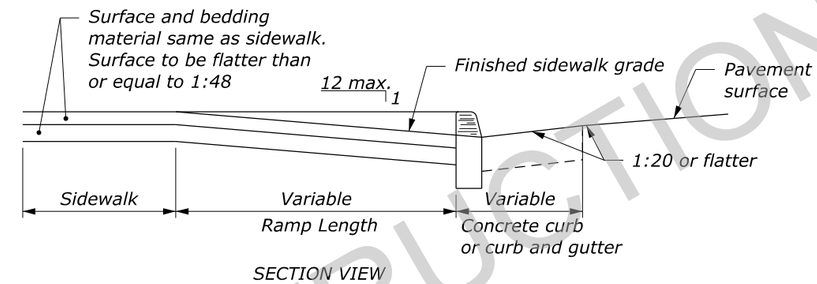

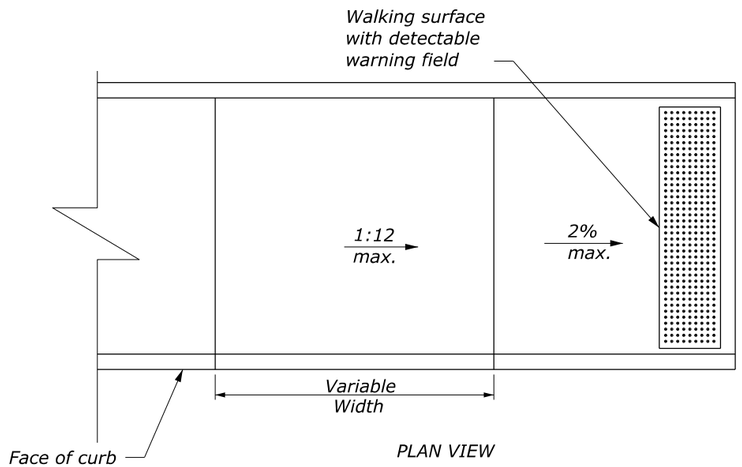

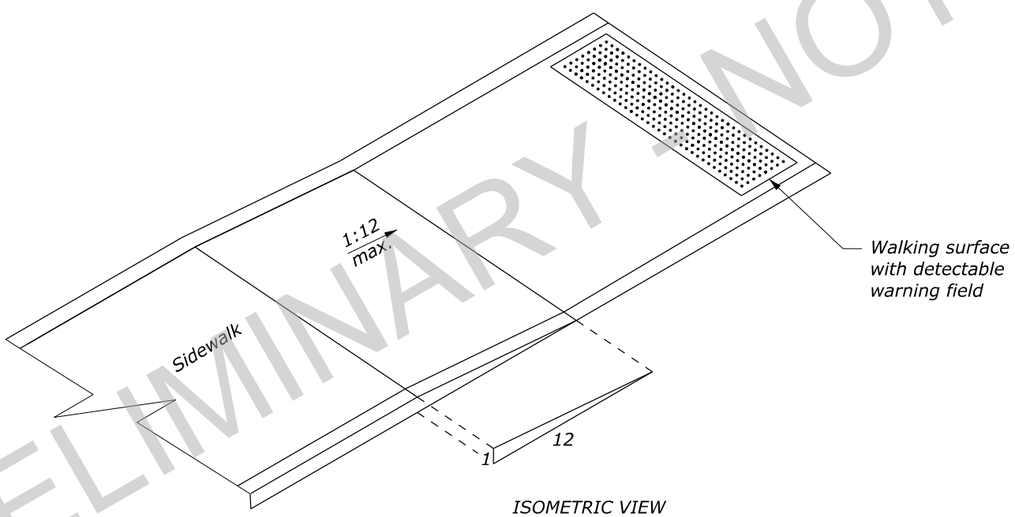

ISOMETRIC VIEW

PARALLEL RAMP

NO SCALE

RAMP DETAILS

PRELIMINARY - NOT FOR CONSTRUCTION

c:\pw_work_wff\d0696551\wff15-2_details_Sheets.dgn [Ramp Details]
21 April 2026 11:36 AM

PROJECT	SHEET NUMBER
WY NP YELL 15(2)	S.01

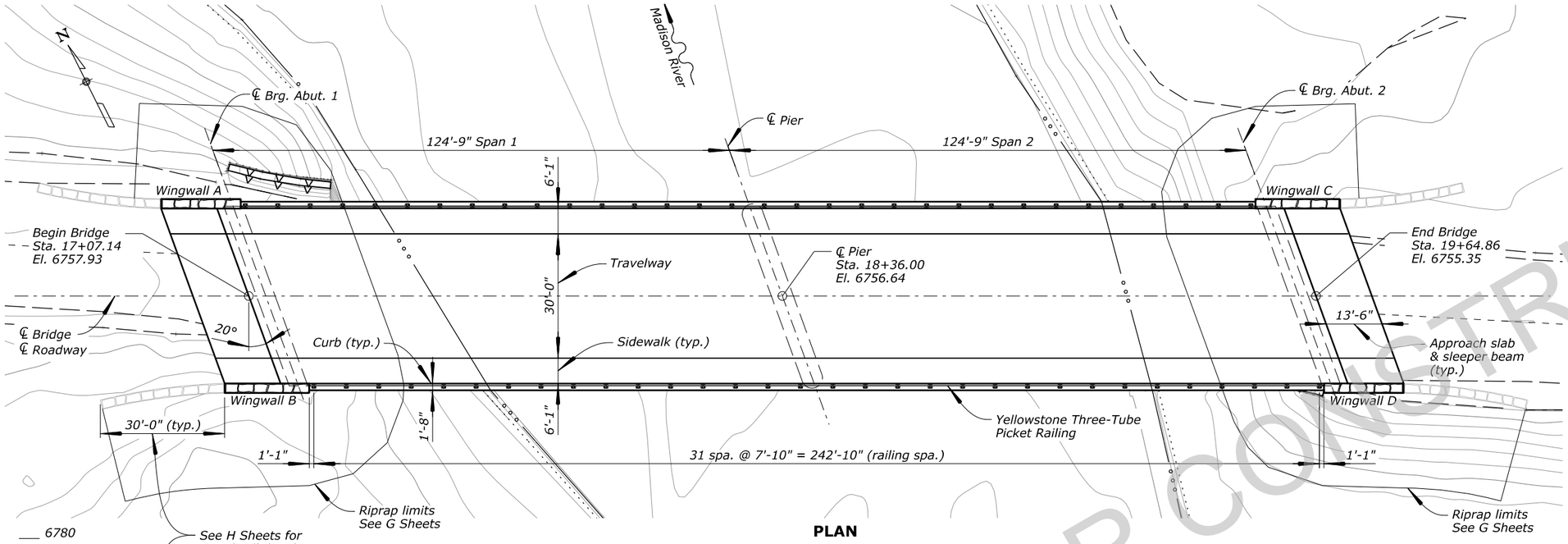

PLAN

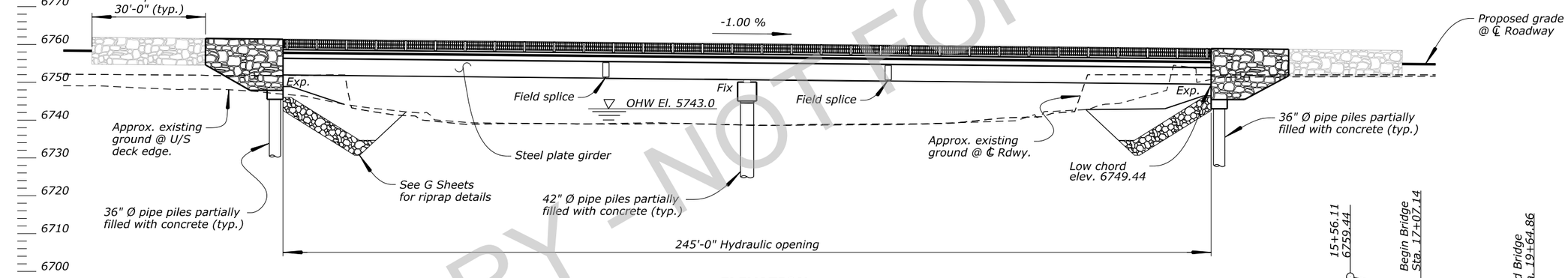

ELEVATION

HYDRAULIC DATA			
	Q (cuft / sec.)	V (ft / sec.)	WS Elev. (ft)
Q_2	1358	2.55	6743.0
Q_{50}	2580	3.5	6744.3
Q_{100}	2828	3.6	6744.6
Q_{500}	3422	4.0	6745.0
Abutments Q_{100} Scour Elevation (ft) : 6734.7			
Pier Q_{100} Scour Elevation (ft) : XXXX.X			

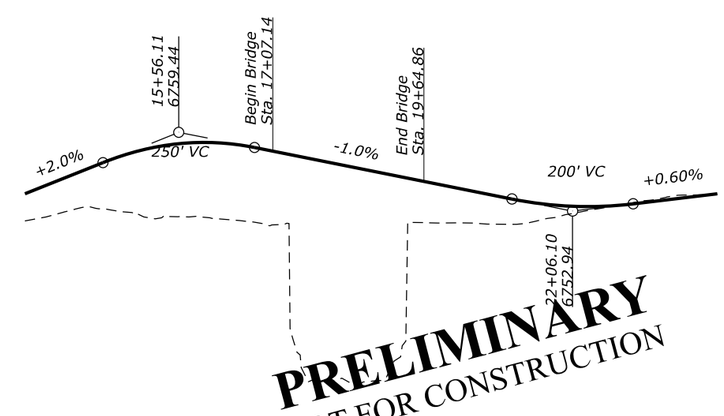

PROFILE GRADE DIAGRAM
(No scale)

BRIDGE DRAWING INDEX

Drawing No.	Sheet No.	Description
RG3318-A	S.1	PLAN AND ELEVATION
RG3318-B	S.2	GENERAL NOTES
RG3318-C	S.3	FOUNDATION LAYOUT
RG3318-D	S.4	PIPE PILE DETAILS
RG3318-E	S.5	ABUTMENT CAPS
RG3318-F	S.6	ABUTMENT BEARING (EXP)
RG3318-G	S.7	ABUTMENT ENDWALLS
RG3318-H	S.8	ABUTMENT WINGWALLS
RG3318-I	S.9	PIER CAP
RG3318-J	S.10	PIER BEARING (FIXED)
RG3318-K	S.11	GIRDER LAYOUT
RG3318-L	S.12	GIRDER DETAILS
RG3318-M	S.13	GIRDER FIELD SPLICES
RG3318-N	S.14	DIAPHRAGMS
RG3318-O	S.15	TYPICAL SECTIONS
RG3318-P	S.16	DECK PLAN (1 OF 2)
RG3318-Q	S.17	DECK PLAN (2 OF 2)
RG3318-R	S.18	DECK AND SIDEWALK DETAILS
RG3318-S	S.19	APPROACH SLAB
RG3318-T	S.20	EXPANSION JOINT
RG3318-U	S.21	BRIDGE RAILING (1 OF 2)
RG3318-V	S.22	BRIDGE RAILING (2 OF 2)
RG3318-W	S.23	STONE MASONRY DETAILS
RG3318-Y	S.24	TEMP AND WORK BRIDGE PLAN
RG3318-X	S.25	REBAR LIST (1 OF 2)
RG3318-Z	S.26	REBAR LIST (1 OF 2)

PRELIMINARY - NOT FOR CONSTRUCTION

PRELIMINARY
NOT FOR CONSTRUCTION

STRUCTURE NO.	STRUCTURE NAME	FEATURES INTERSECTED	LOCATION	U.S. DEPARTMENT OF TRANSPORTATION FEDERAL HIGHWAY ADMINISTRATION OFFICE OF FEDERAL LANDS HIGHWAY
1570-026	MADISON RIVER BRIDGE	MADISON RIVER	YELLOWSTONE NATIONAL PARK	

NO.	DATE	BY	REVISIONS	DESIGNED BY	DRAWN BY	CHECKED BY	PROJECT TEAM LEAD	SCALE	BRIDGE PLAN SHEET	DATE	RG / BRP NO.
				K.COX	K.COX	X.XXXX	B.OLTMANN	1" = 30'-0"	01 of 26	APRIL 2026	RG3318-A

PLAN AND ELEVATION

c:\pw_work_wfl\d0626775\S.1 - S.26 WY NP YELL 15(2) PLAN SHEETS.DGN [PLAN AND ELEVATION]
21 April 2026 3:48 PM

GENERAL NOTES:

SPECIFICATIONS:

Design: AASHTO LRFD Bridge Design Specifications, 9th Edition, 2020.

Construction: Standard Specifications for Construction of Roads and Bridges on Federal Highway Projects, FP-24.

DESIGN LOADS:

Dead Load:

Concrete: 150 lbs. per cubic foot (CIP).
Structural Steel: 490 lbs. per cubic foot.
Stone Masonry: 170 lbs. per cubic foot.
Future Wearing Surface: 25 lbs. per square foot, applied to clear roadway width.
Lateral Active Equivalent Earth Pressure: 36 per cubic foot.

Live Load:
Traffic: HL-93. Maximum Dynamic Load Allowance (Impact), IM=33%.
Pedestrian Load: 75 lbs. per square foot.

Wind Load:
In accordance with the AASHTO LRFD Bridge Design Specifications, 9th Edition, 2020.

Seismic Design:
In accordance with AASHTO LRFD Bridge Design Specification, 9th Edition, 2020.
7% probability of exceedance in 75 yr. design event. PGA = 0.36 g, S_S = 1.08 g, S_1 = 0.754 g,
Site Class DE, Seismic Zone 4, and AASHTO Seismic Design Category D.

MATERIALS:

Structural Concrete:

Furnish Class D(AE) Internally Cured Concrete (ICC) with minimum 28 days compressive strength f'_c = 5,000 psi for bridge decks, sidewalks, curbs, endwalls, wingwalls, approach slabs, and sleeper slabs.

Furnish Class A(AE) Structural Concrete with minimum 28 days compressive strength f'_c = 4,500 psi for all other concrete.

Provide Type II or Type IL Hydraulic Cement conforming to AASHTO M 85. Chamfer exposed edges of all concrete ¾-inch, unless noted otherwise. Provide 2-inch cover for reinforcing steel, unless noted otherwise.

Reinforcing Steel:

Furnish reinforcing steel conforming to AASHTO M 31 or M 322, Grade 60 deformed.

Provide standard hooks conforming to AASHTO for bends shown at ends of bars, unless noted otherwise.

Structural Steel:
Furnish structural steel for top flanges, bottom flanges, flange splice plates, web plates, web splice plates, stiffeners, bearing stiffeners and cross frames with high-strength low alloy corrosion resistant steel conforming to AASHTO M 270, Grade 50W unless otherwise shown on the plans.

Fabricate structural steel in a fabricating plant that is certified under the AISC, Quality Certification Program. Ensure the stability of the structure during all phases of construction.

Perform Charpy V-notch testing according to AASHTO T 243, frequency H, for temperature Zone 3, on primary longitudinal superstructure components and connections. These components include web plates, web and flange splice plates, and flange plates.

Perform welding for steel superstructure components according to ANSI/AASHTO/AWS D1.5 Bridge Welding Code.

All field connections are slip critical, friction type, Class B and be made with ⅞" Ø fasteners conforming to ASTM F3125, Grade A325 or F1852, Type 3 Weathering steel, unless noted otherwise on the plans.

Furnish welded shear connectors conforming to AASHTO M 169 (ASTM A108)

Coat exposed girder ends and steel members at locations designated in the plans, use color 20108 (AMS-STD-595) for topcoat. For bridge rail top coat use color 20062 (AMS-STD-595). See FP-24 and Special Contract Requirements for additional requirements.

Bearings:
Furnish steel reinforced elastomeric bearing pad that conform to AASHTO M 251 with 60 Durometer hardness. Follow AASHTO LRFD Design Method A.

ESTIMATE

Item No.	Item Description	Quantity	Unit	Notes
20304-2000	REMOVAL OF BRIDGE	ALL	LPSM	
20801-0000	STRUCTURE EXCAVATION	320	CUYD	(1)
20803-0000	STRUCTURAL BACKFILL	150	CUYD	
20810-0000	SHORING AND BRACING	ALL	LPSM	
55101-2200	STEEL PIPE PILE, IN-PLACE (36-INCH DIAMETER X 0.75-INCH)	1,000	LNFT	(2)
55101-2200	STEEL PIPE PILE, IN-PLACE (42-INCH DIAMETER X 0.75-INCH)	600	LNFT	(2)
55104-1000	DYNAMIC PILE LOAD TEST	6	EACH	
55201-0200	STRUCTURAL CONCRETE, CLASS A(AE) (SUBSTRUCTURE)	134	CUYD	(1)(3)
55201-0200	STRUCTURAL CONCRETE, CLASS A(AE) (PILE)	148	CUYD	(1)
55201-0800	STRUCTURAL CONCRETE, CLASS D(AE) (DECK)	526	CUYD	(1)(4)
55201-0800	STRUCTURAL CONCRETE, CLASS D(AE) (APPROACH)	66	CUYD	(1)(5)
55235-0000	EXPANSION JOINTS	90	LNFT	(1)
55401-1000	REINFORCING STEEL	195,000	LB	(1)
55502-0000	STRUCTURAL STEEL, FURNISHED, FABRICATED, AND ERECTED	490,000	LB	(1)(6)
55601-0900	BRIDGE RAILING, STEEL (THREE-TUBE YELLOWSTONE PICKET RAIL)	490	LNFT	(1)(7)
56202-0000	TEMPORARY SUPPORT STRUCTURE (WORK BRIDGE)	ALL	LPSM	
56401-1000	BEARING DEVICE, ELASTOMERIC (EXPANSION)	10	EACH	(1)
56401-1000	BEARING DEVICE, ELASTOMERIC (FIXED)	5	EACH	(1)
57502-0000	TEMPORARY BRIDGE (DETOUR TRAFFIC BRIDGE)	ALL	LPSM	
62001-1000	CLASS B MASONRY, ROCK FACE FINISH	32	CUYD	(8)

Estimate Notes:

1. *Contract Quantity*
2. *Includes cost of furnishing and installing pipe piles and structural steel shear rings. Reinforcing steel embedded in pipe piles is included in pay item for reinforcing steel. Includes cost of cutting shoe and pile splices.*
3. *Includes concrete in pier cap and abutments. Includes cost of furnishing and installing all joint fillers, weep holes, geocomposite sheet drains, anchor rods, and non shrink grout.*
4. *Includes concrete in deck, sidewalks, curbs, endwalls, and wingwalls. Includes cost for installation of HDPE utility conduit and connections.*
5. *Includes cost of concrete in approach slab, approach slab sidewalk, sleeper beam, and masonry corewall. Includes cost of furnishing and installing all joint fillers, sealant, backer rods, aggregate base and polyethylene sheeting for approach slabs.*
6. *Includes cost of furnishing and installing all structural steel, bolts, studs, and welds for plate girders, bearing & jacking stiffeners, cross frames and field splices.*
7. *Includes cost of furnishing and installing all steel components, inserts, rail post anchor assemblies, grout, paint, and all materials required for construction of the steel railing.*
8. *Includes cost of furnishing and installing stone masonry for bridge wingwalls, stone barrier, and curtainwalls. Includes cost of minor concrete, mortar, dovetail slots, anchors, grouted CMU blocks), and all work required to construct stone masonry.*

PRELIMINARY - NOT FOR CONSTRUCTION

PRELIMINARY
NOT FOR CONSTRUCTION

PROJECT	SHEET NUMBER
WY NP YELL 15(2)	S.03

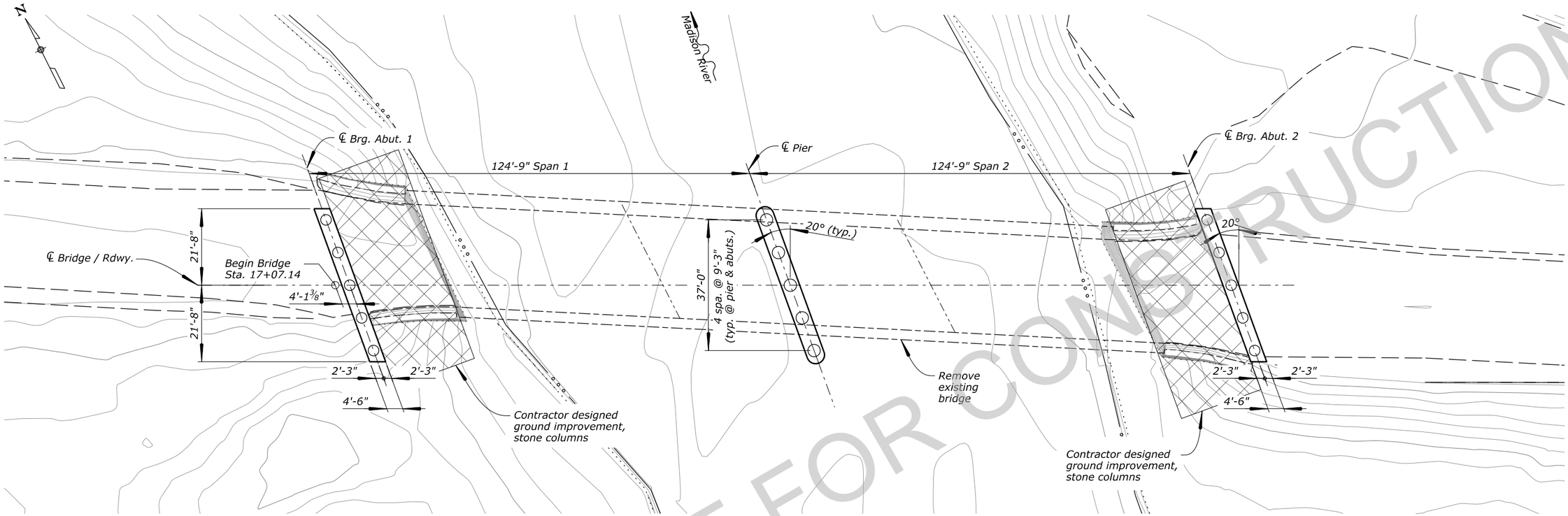

PLAN

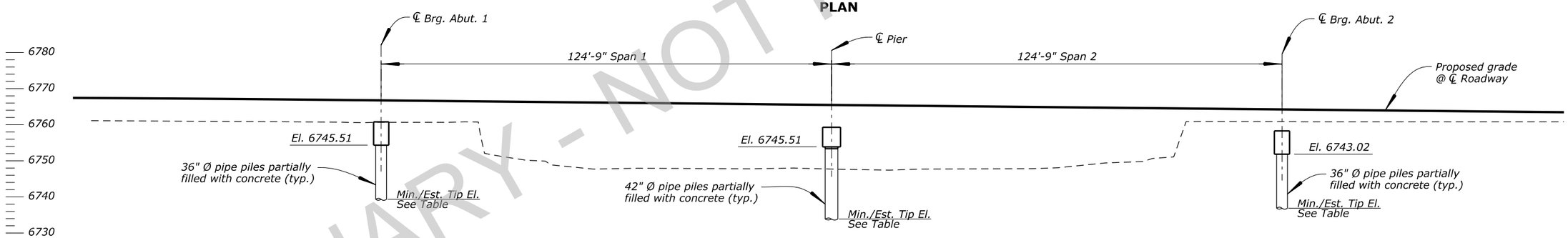

ELEVATION

FOUNDATION TABLE			
Location	Max. Factored Pile Axial Load (Strength I) (@ Top of Pile)	Est. Pile Tip Elevation	Min. Pile Tip Elevation
Abut. 1	XXX kips	XXXX.XX	XXXX.XX
Pier	XXX kips	XXXX.XX	XXXX.XX
Abut. 2	XXX kips	XXXX.XX	XXXX.XX

Foundation Notes:

1. *Furnish steel piles conforming to ASTM A709 (AASHTO M 270), Grade 50, Zone 3. Furnish structural steel for shear rings conforming to ASTM A36. Perform welding by an ANSI certified welder according to ANSI/AASHTO/AWS D1.1.*
2. *Provide open end cutting shoe conforming to ASTM A148, Grade 90-60 to prevent damage to the pile during installation.*
3. *After driving pipe piles fill with class A(AE) structural concrete to depths shown on RG3318-D.*
4. *$^{X}/_{XX}$" deducted from pipe pile thickness to account for long term corrosion and deterioration from environmental conditions.*
5. *Estimated pile tip elevations shown in the pile summary table were determined from test borings taken in the vicinity of the intended substructure units. Actual tip elevations may vary.*
6. *For additional information see Geotechnical Report No. XX-XX,dated XXXXX 2026 prepared by U.S. Dept. of Transportation, Federal Highway Administration, Western Federal Lands Highway Division, Vancouver Washington.*

PRELIMINARY
NOT FOR CONSTRUCTION

PRELIMINARY - NOT FOR CONSTRUCTION

STRUCTURE NO.	STRUCTURE NAME	FEATURES INTERSECTED	LOCATION	U.S. DEPARTMENT OF TRANSPORTATION FEDERAL HIGHWAY ADMINISTRATION OFFICE OF FEDERAL LANDS HIGHWAY
1570-026	MADISON RIVER BRIDGE	MADISON RIVER	YELLOWSTONE NATIONAL PARK	

NO.	DATE	BY	REVISIONS	DESIGNED BY	DRAWN BY	CHECKED BY	PROJECT TEAM LEAD	SCALE	BRIDGE PLAN SHEET	DATE	RG / BRP NO.
				K.COX	K.COX	X.XXXX	B.OLTMANN	NO SCALE	03 of 26	APRIL 2026	RG3318-C

FOUNDATION LAYOUT

c:\pw_work_wfl\d0626775\S.1 - S.26 WY NP YELL 15(2) PLAN SHEETS.DGN [FOUNDATION LAYOUT]
21 April 2026 4:19 PM

PROJECT	SHEET NUMBER
WY NP YELL 15(2)	S.04

INTENTIONALLY LEFT BLANK

PRELIMINARY - NOT FOR CONSTRUCTION

PRELIMINARY
NOT FOR CONSTRUCTION

c:\pw_work_wff\d0626775\S.1 - S.26 WY NP YELL 15(2) PLAN SHEETS.DGN [PIPE PILE DETAILS]
21 April 2026 4:30 PM

STRUCTURE NO.	STRUCTURE NAME	FEATURES INTERSECTED	LOCATION
1570-026	MADISON RIVER BRIDGE	MADISON RIVER	YELLOWSTONE NATIONAL PARK

U.S. DEPARTMENT OF TRANSPORTATION
FEDERAL HIGHWAY ADMINISTRATION
OFFICE OF FEDERAL LANDS HIGHWAY

NO.	DATE	BY	REVISIONS	DESIGNED BY	DRAWN BY	CHECKED BY	PROJECT TEAM LEAD	SCALE	BRIDGE PLAN SHEET	DATE	RG / BRP NO.
				K.COX	K.COX	X.XXXX	B.OLTMANN	NO SCALE	04 of 26	APRIL 2026	RG3318-D

PIPE PILE DETAILS

PROJECT	SHEET NUMBER
WY NP YELL 15(2)	S.05

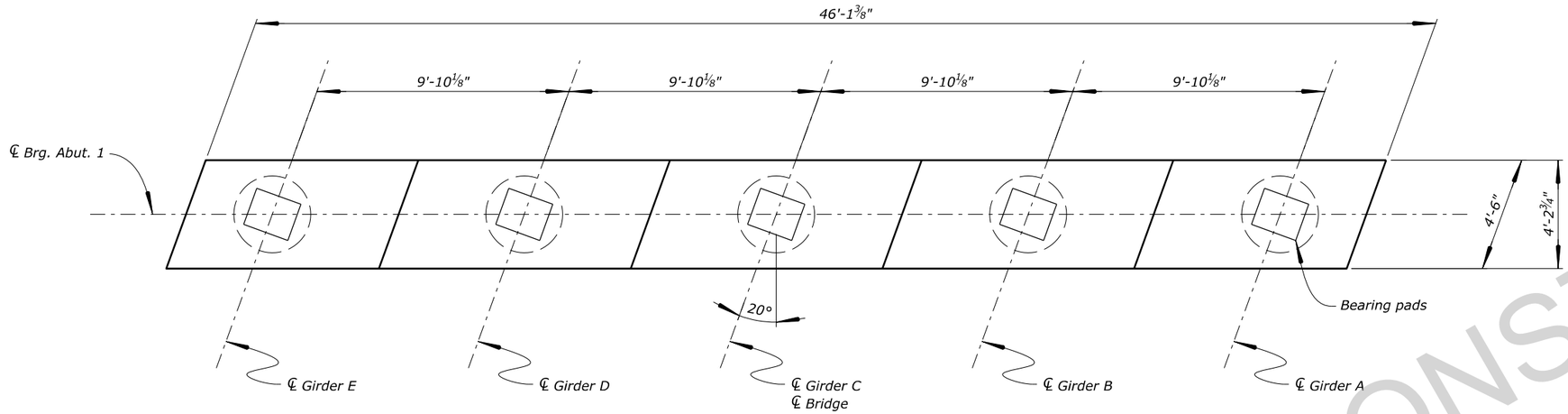

ABUTMENT PLAN
(Abutment 1 shown, Abutment 2 similar)

BEARING SEAT ELEVATIONS		
Girder	Abut. 1	Abut. 2
A	6751.649	6749.153
B	6751.800	6749.305
C	6751.951	6749.456
D	6751.733	6749.237
E	6751.514	6749.019

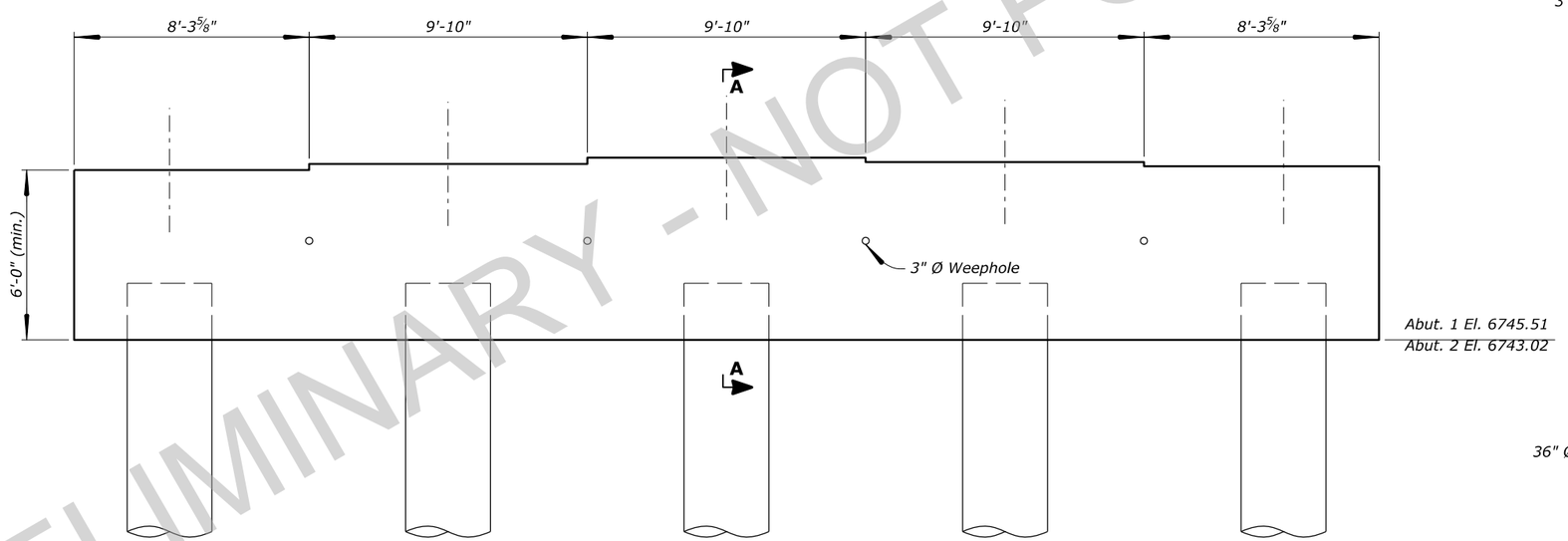

ABUTMENT ELEVATION
(Abutment 1 looking back shown, Abutment 2 similar)

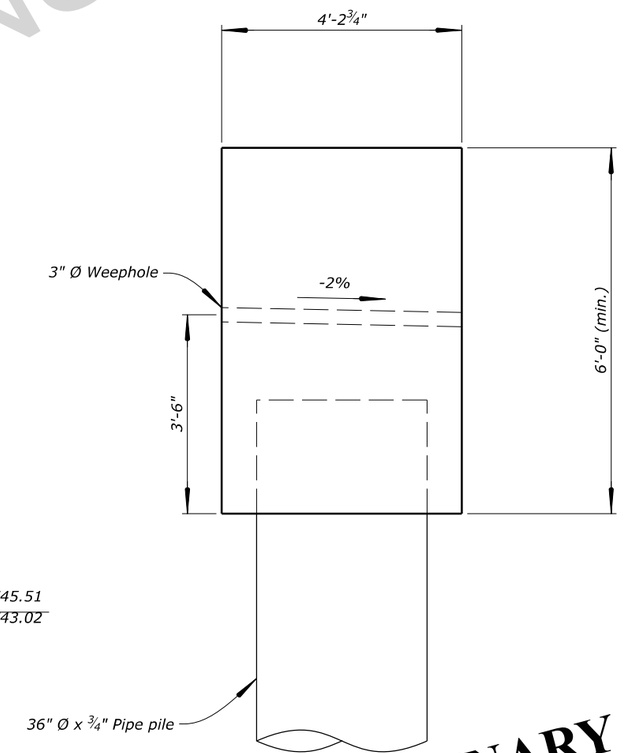

SECTION A-A
(No scale)

PRELIMINARY - NOT FOR CONSTRUCTION
PRELIMINARY NOT FOR CONSTRUCTION

STRUCTURE NO.	STRUCTURE NAME	FEATURES INTERSECTED	LOCATION	U.S. DEPARTMENT OF TRANSPORTATION FEDERAL HIGHWAY ADMINISTRATION OFFICE OF FEDERAL LANDS HIGHWAY
1570-026	MADISON RIVER BRIDGE	MADISON RIVER	YELLOWSTONE NATIONAL PARK	

NO.	DATE	BY	REVISIONS	DESIGNED BY	DRAWN BY	CHECKED BY	PROJECT TEAM LEAD	SCALE	BRIDGE PLAN SHEET	DATE	RG / BRP NO.
				K.COX	K.COX	X.XXXX	B.OLTMANN	3/16" = 1'-0"	05 of 26	APRIL 2026	RG3318-E

ABUTMENT CAPS

c:\pw_work_wfl\d0626775\S.1 - S.26 WY NP YELL 15(2) PLAN SHEETS.DGN [ABUTMENT CAPS]
21 April 2026 4:44 PM

PROJECT	SHEET NUMBER
WY NP YELL 15(2)	S.06

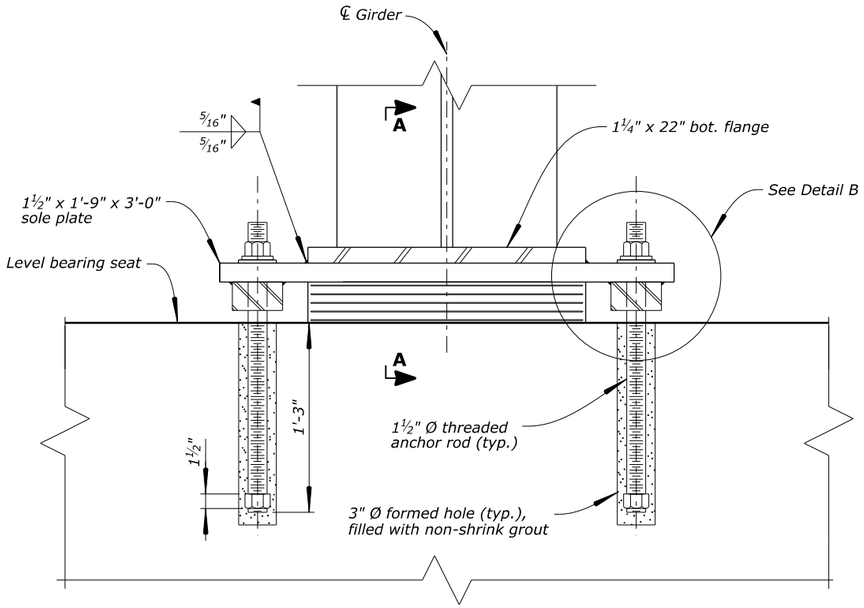

ELEVATION

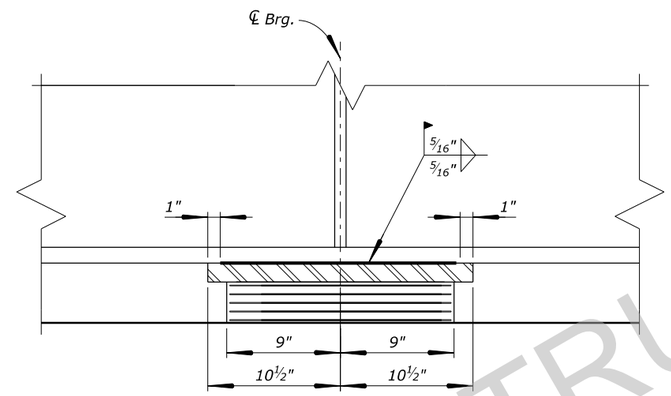

SECTION A-A

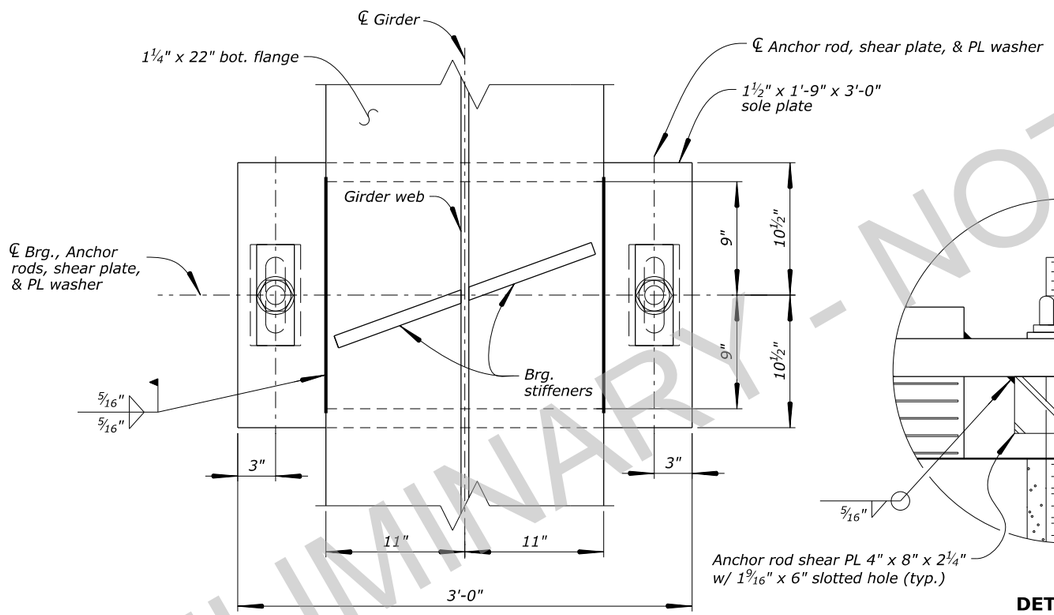

PLAN
(10 Req'd)

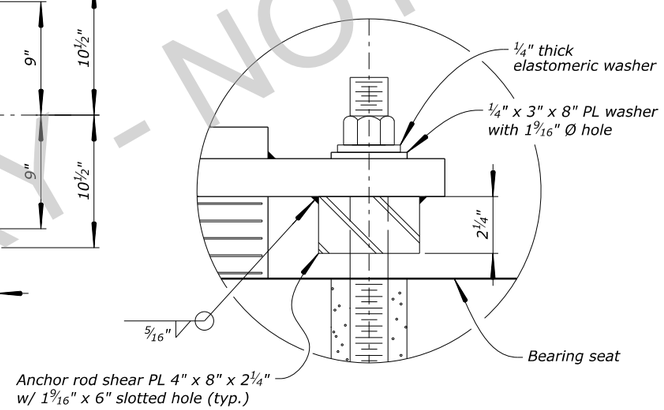

DETAIL B
(No scale)

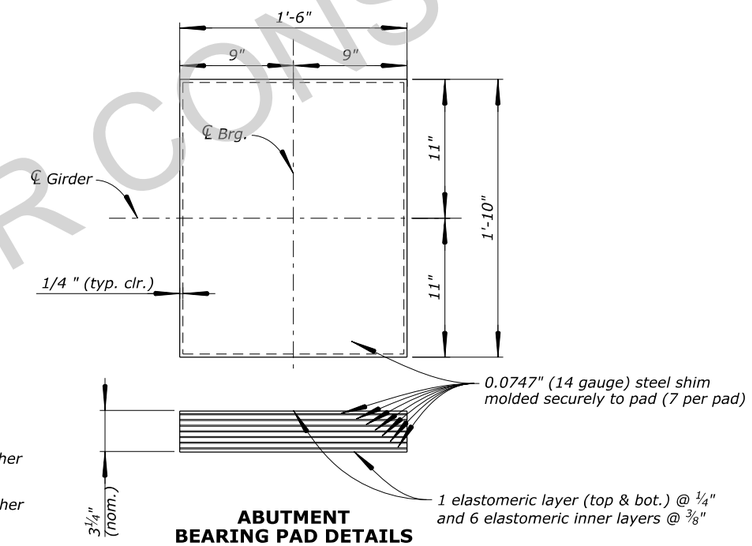

ABUTMENT BEARING PAD DETAILS

Notes:

1. *Provide bearing's structural steel plates conforming to AASHTO M 270, Grade 50W .*
2. *Provide steel reinforced elastomeric bearing pad conforming to AASHTO M 251 with 60 Durometer hardness, elastomer Grade 4 or higher, and steel shim plates conforming to ASTM A36. Design shear modulus, G = 130 psi @ 73° F.*
3. *AASHTO LRFD Design method "A" used for elastomeric pad design.*
4. *Provide anchor rods conforming to ASTM F1554, Grade 105 including supplementary charpy v-notch test criteria, 54, and heavy hex nuts conforming to ASTM A563. Galvanize anchor rods and nuts.*
5. *Vulcanize the elastomeric pads to bottom surface of the sole plate.*
6. *Submit for approval the procedures to prevent heat damage to elastomeric pads during field welding. Keep temperature of the steel adjacent to the elastomer below 250° F.*
7. *Mark bearings prior to shipping. On the mark include the bearing location on the bridge, and a direction arrow that points ahead station. Make the marks permanent and visible after the bearings are installed.*
8. *Provide non-shrink grout conforming to ASTM C1107 with a minimum 3-day compressive strength f'c = 5000 psi, and minimum 28-day bond strength = 2000 psi per ASTM C 882.*

PRELIMINARY - NOT FOR CONSTRUCTION

PRELIMINARY
NOT FOR CONSTRUCTION

STRUCTURE NO.	STRUCTURE NAME	FEATURES INTERSECTED	LOCATION	U.S. DEPARTMENT OF TRANSPORTATION FEDERAL HIGHWAY ADMINISTRATION OFFICE OF FEDERAL LANDS HIGHWAY
1570-026	MADISON RIVER BRIDGE	MADISON RIVER	YELLOWSTONE NATIONAL PARK	

NO.	DATE	BY	REVISIONS	DESIGNED BY	DRAWN BY	CHECKED BY	PROJECT TEAM LEAD	SCALE	BRIDGE PLAN SHEET	DATE	RG / BRP NO.
				K.COX	K.COX	X.XXXX	B.OLTMANN	1" = 1'-0"	06 of 26	APRIL 2026	RG3318-F

ABUTMENT BEARING (EXP)

c:\pw_work_wfl\d0626775\S.1 - S.26 WY NP YELL 15(2) PLAN SHEETS.DGN [ABUTMENT BEARING (EXP)]
21 April 2026 4:46 PM

PROJECT	SHEET NUMBER
WY NP YELL 15(2)	S.07

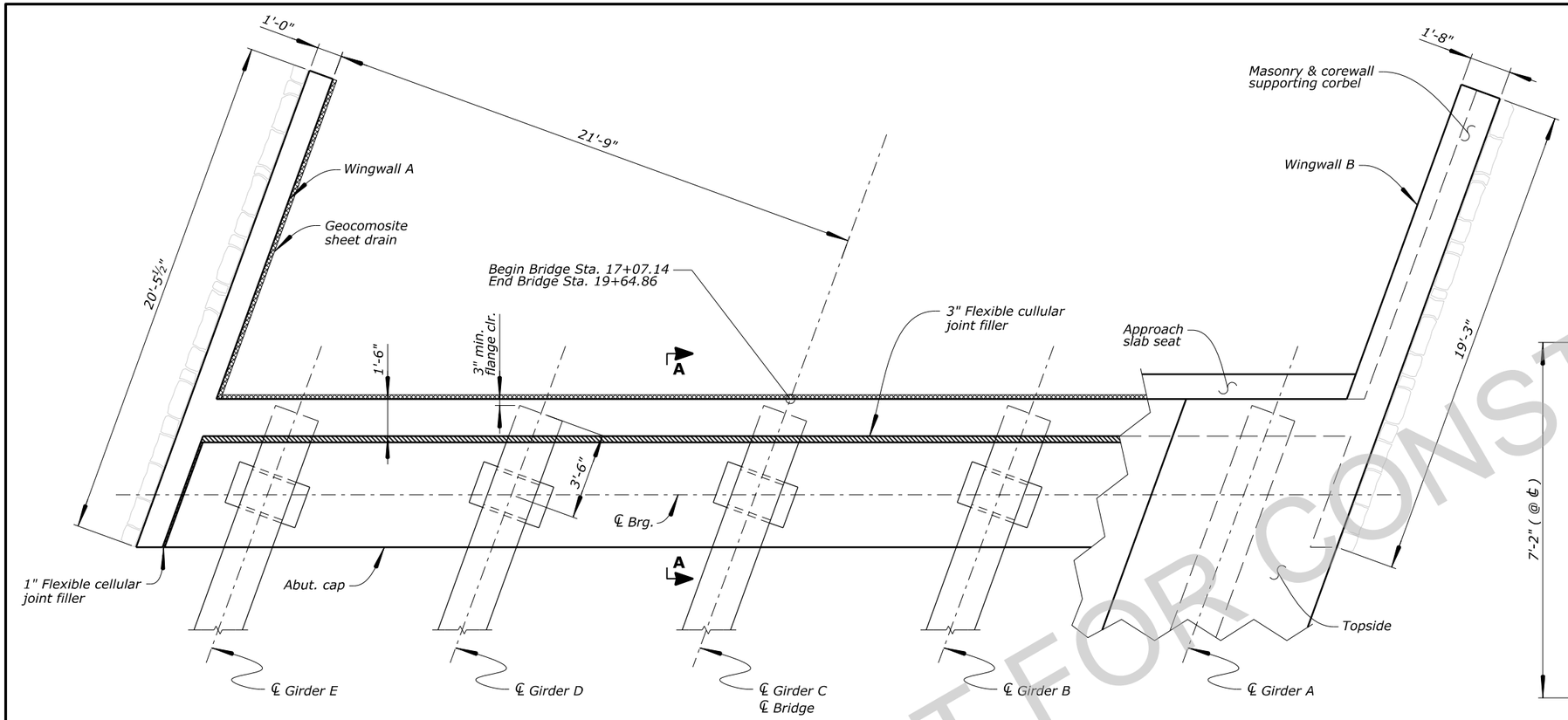

ENDWALL PLAN
(Abutment 1 shown, Abutment 2 similar)

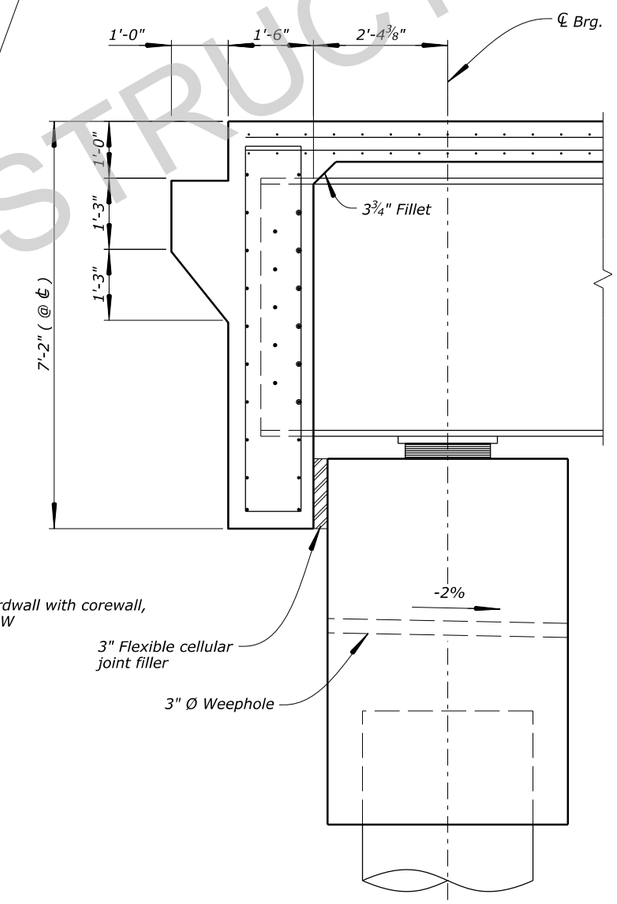

SECTION A-A
(No scale)

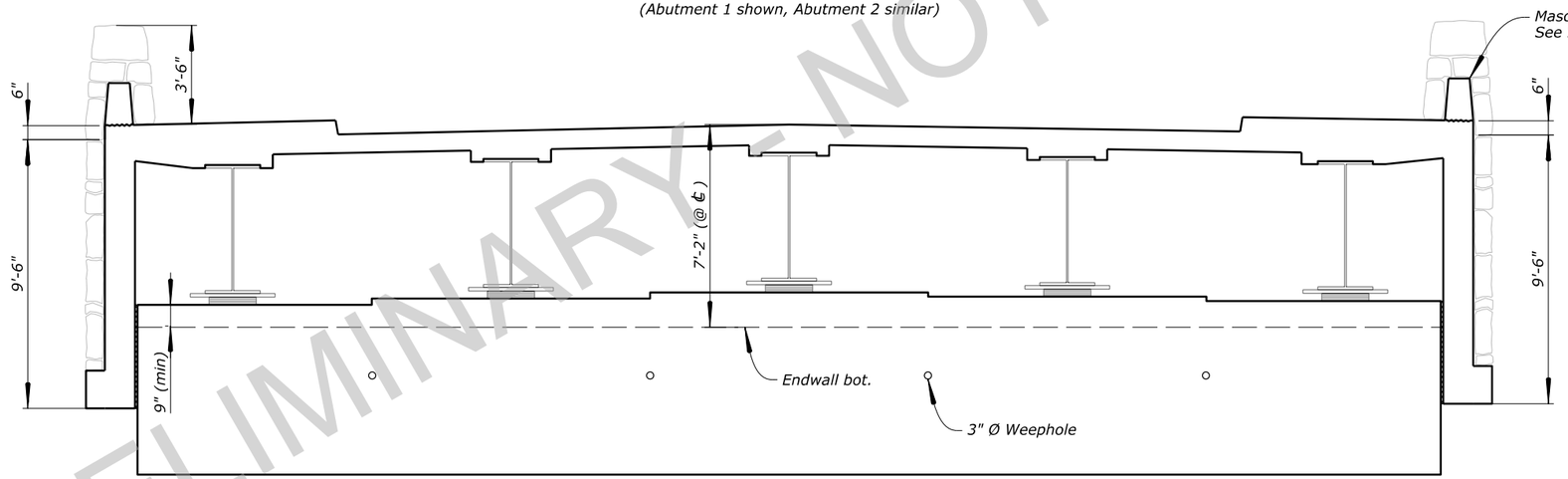

ENDWALL ELEVATION
(Abutment 1 looking back shown, Abutment 2 similar)

PRELIMINARY - NOT FOR CONSTRUCTION

PRELIMINARY
NOT FOR CONSTRUCTION

STRUCTURE NO.	STRUCTURE NAME	FEATURES INTERSECTED	LOCATION	U.S. DEPARTMENT OF TRANSPORTATION FEDERAL HIGHWAY ADMINISTRATION OFFICE OF FEDERAL LANDS HIGHWAY
1570-026	MADISON RIVER BRIDGE	MADISON RIVER	YELLOWSTONE NATIONAL PARK	

NO.	DATE	BY	REVISIONS	DESIGNED BY	DRAWN BY	CHECKED BY	PROJECT TEAM LEAD	SCALE	BRIDGE PLAN SHEET	DATE	RG / BRP NO.
				K.COX	K.COX	X.XXXX	B.OLTMANN	NO SCALE	07 of 26	APRIL 2026	RG3318-G

ABUTMENT ENDWALLS

c:\pw_work_wfl\d0626775\S.1 - S.26 WY NP YELL 15(2) PLAN SHEETS.DGN [ABUTMENT ENDWALLS]
21 April 2026 4:47 PM

PROJECT	SHEET NUMBER
WY NP YELL 15(2)	S.08

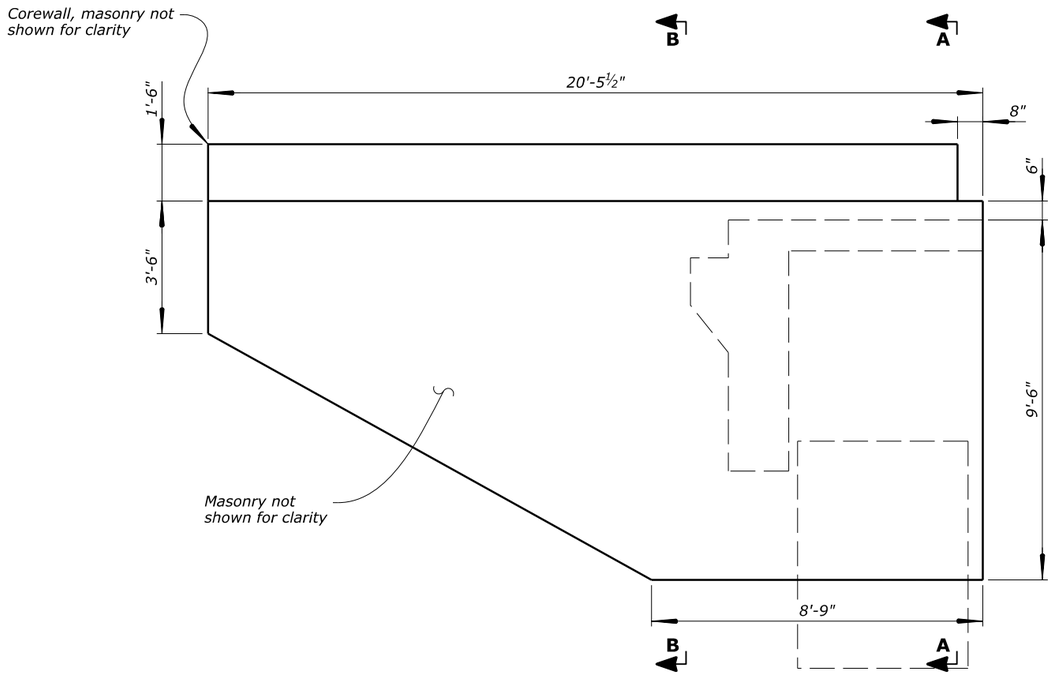

WINGWALL B & C ELEVATION
(Exterior Face Shown)

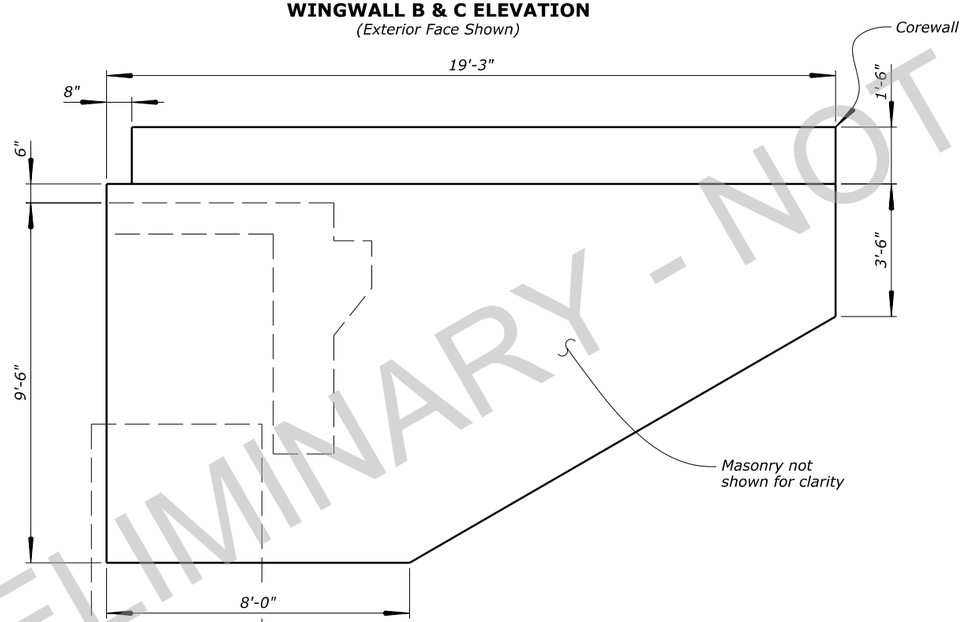

WINGWALL A & D ELEVATION
(Exterior Face Shown)

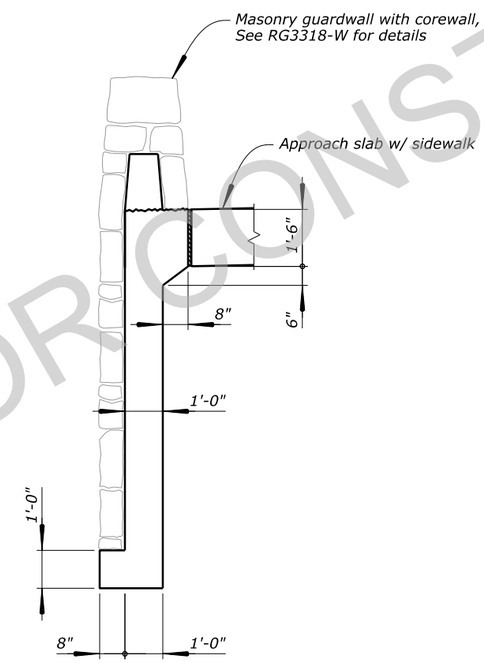

SECTION B-B

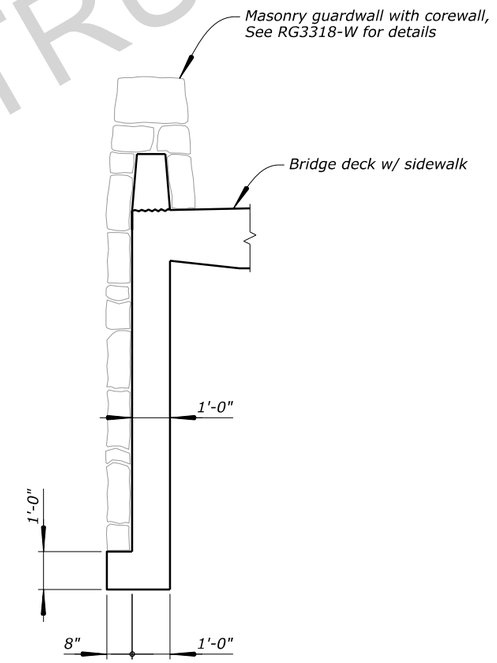

SECTION A-A

PRELIMINARY - NOT FOR CONSTRUCTION

PRELIMINARY
NOT FOR CONSTRUCTION

STRUCTURE NO.	STRUCTURE NAME	FEATURES INTERSECTED	LOCATION	U.S. DEPARTMENT OF TRANSPORTATION FEDERAL HIGHWAY ADMINISTRATION OFFICE OF FEDERAL LANDS HIGHWAY
1570-026	MADISON RIVER BRIDGE	MADISON RIVER	YELLOWSTONE NATIONAL PARK	

NO.	DATE	BY	REVISIONS	DESIGNED BY	DRAWN BY	CHECKED BY	PROJECT TEAM LEAD	SCALE	BRIDGE PLAN SHEET	DATE	RG / BRP NO.
				K.COX	K.COX	X.XXXX	B.OLTMANN	NO SCALE	08 of 26	APRIL 2026	RG3318-H

ABUTMENT WINGWALLS

c:\pw_work_wfl\d0626275\S.1 - S.26 WY NP YELL 15(2) PLAN SHEETS.DGN [ABUTMENT WINGWALLS]
21 April 2026 4:49 PM

PROJECT	SHEET NUMBER
WY NP YELL 15(2)	S.09

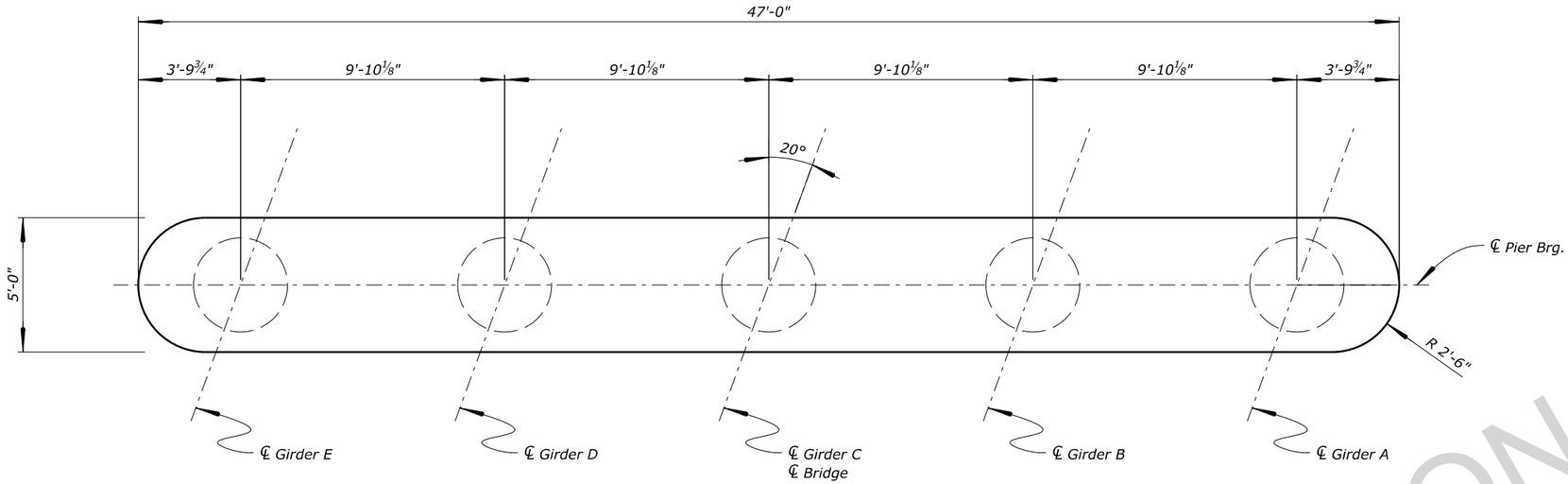

PIER PLAN

BEARING SEAT ELEVATIONS	
Girder	Pier
A	6750.339
B	6750.490
C	6750.641
D	6750.423
E	6750.204

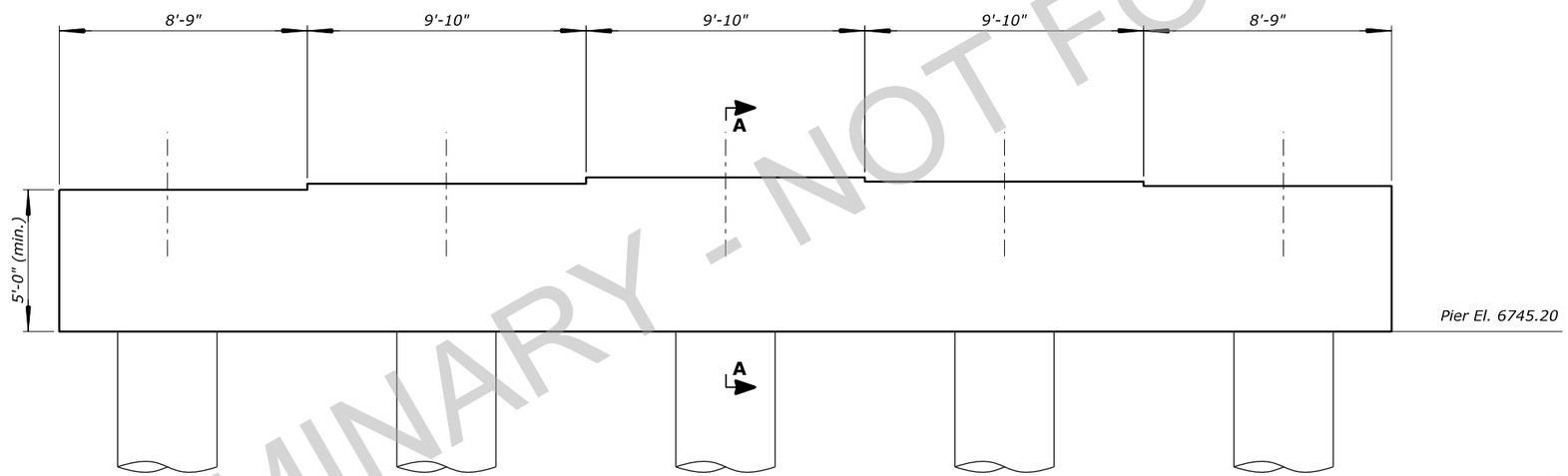

PIER ELEVATION
(Looking back shown)

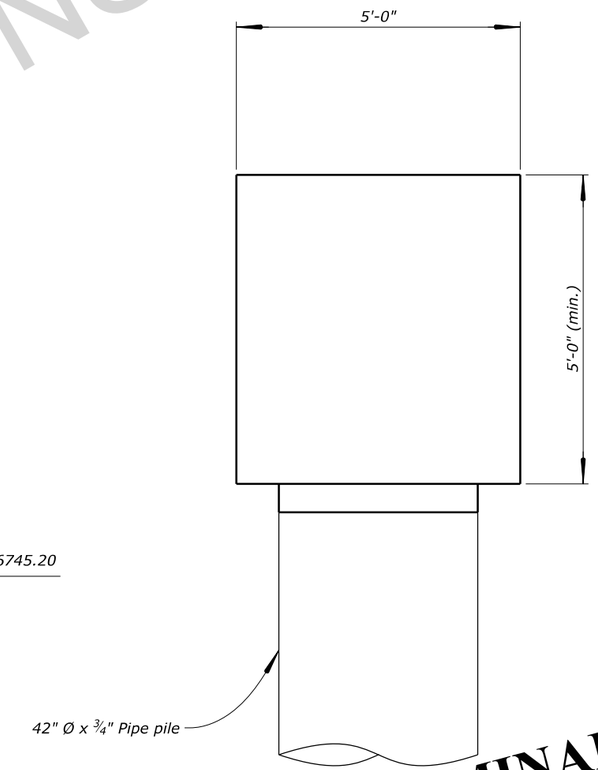

SECTION A-A
(No scale)

PRELIMINARY - NOT FOR CONSTRUCTION

PRELIMINARY
NOT FOR CONSTRUCTION

STRUCTURE NO.	STRUCTURE NAME	FEATURES INTERSECTED	LOCATION	U.S. DEPARTMENT OF TRANSPORTATION FEDERAL HIGHWAY ADMINISTRATION OFFICE OF FEDERAL LANDS HIGHWAY
1570-026	MADISON RIVER BRIDGE	MADISON RIVER	YELLOWSTONE NATIONAL PARK	

NO.	DATE	BY	REVISIONS	DESIGNED BY	DRAWN BY	CHECKED BY	PROJECT TEAM LEAD	SCALE	BRIDGE PLAN SHEET	DATE	RG / BRP NO.
				K.COX	K.COX	X.XXXX	B.OLTMANN	NO SCALE	09 of 26	APRIL 2026	RG3318-I

PIER CAP

c:\pw_work_wfl\d0626775\S.1 - S.26 WY NP YELL 15(2) PLAN SHEETS.DGN [PIER CAP]
21 April 2026 4:55 PM

PROJECT	SHEET NUMBER
WY NP YELL 15(2)	S.10

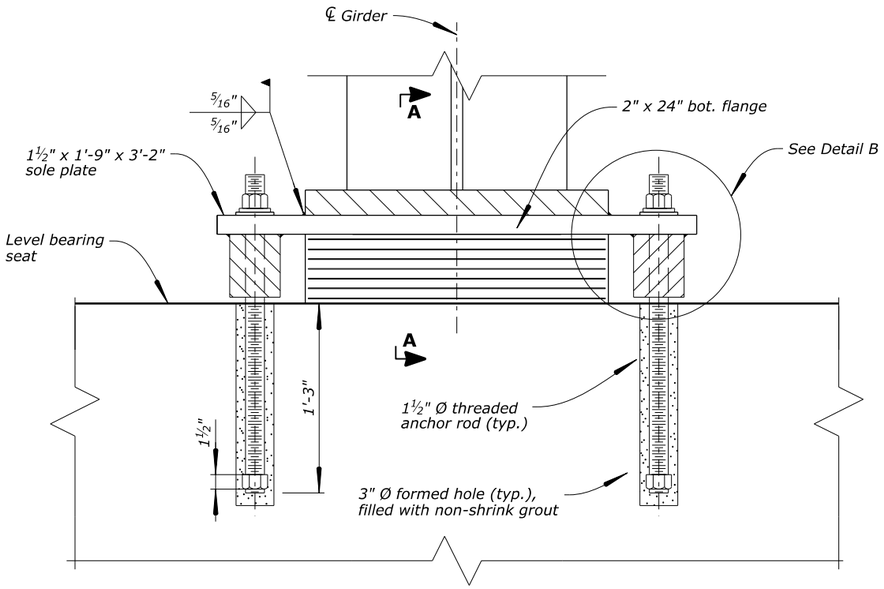

ELEVATION

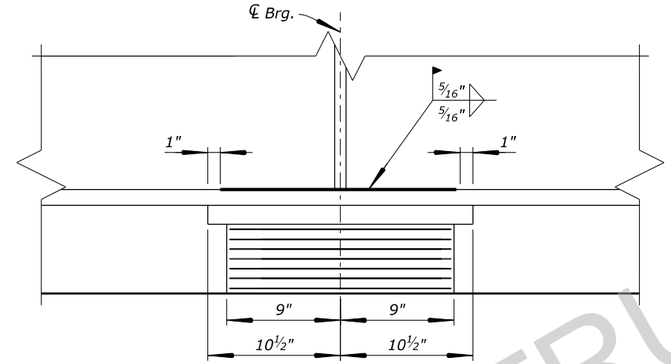

SECTION A-A

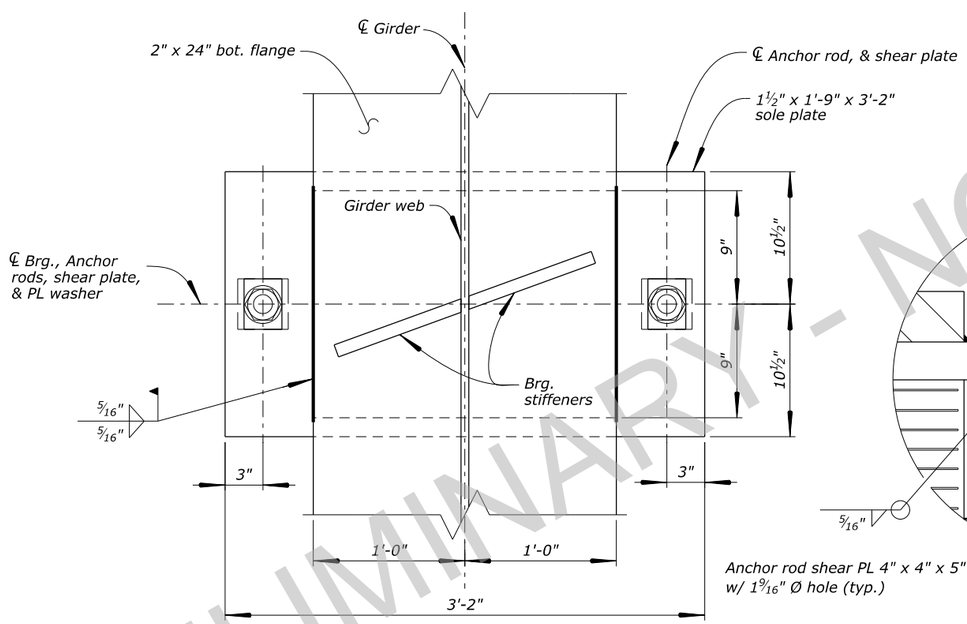

PLAN
(5 Req'd)

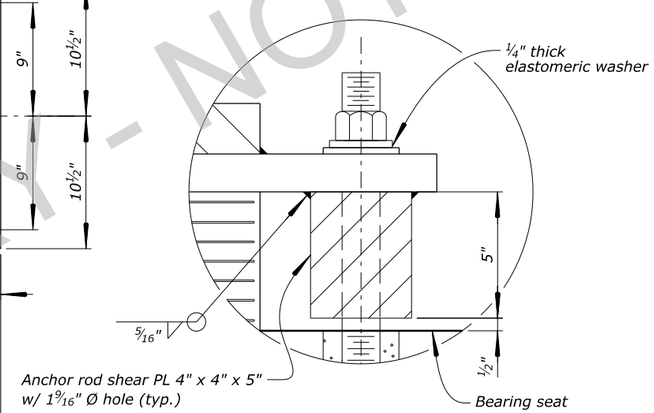

DETAIL B
(No scale)

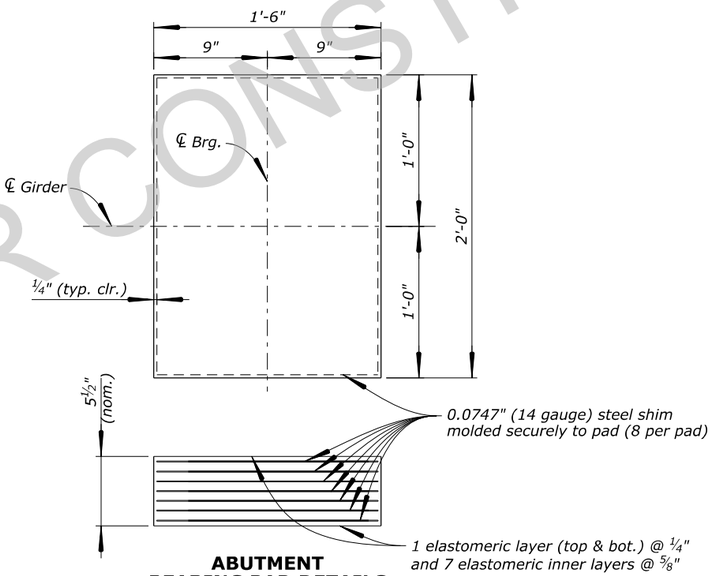

ABUTMENT BEARING PAD DETAILS

Notes:

1. *Provide bearing's structural steel plates conforming to AASHTO M 270, Grade 50W .*
2. *Provide steel reinforced elastomeric bearing pad conforming to AASHTO M 251 with 60 Durometer hardness, elastomer Grade 4 or higher, and steel shim plates conforming to ASTM A36. Design shear modulus, G = 130 psi @ 73° F.*
3. *AASHTO LRFD Design method "A" used for elastomeric pad design.*
4. *Provide anchor rods conforming to ASTM F1554, Grade 105 including supplementary charpy v-notch test criteria, 54, and heavy hex nuts conforming to ASTM A563. Galvanize anchor rods and nuts.*
5. *Vulcanize the elastomeric pads to bottom surface of the sole plate.*
6. *Submit for approval the procedures to prevent heat damage to elastomeric pads during field welding. Keep temperature of the steel adjacent to the elastomer below 250° F.*
7. *Mark bearings prior to shipping. On the mark include the bearing location on the bridge, and a direction arrow that points ahead station. Make the marks permanent and visible after the bearings installed.*
8. *Provide non-shrink grout conforming to ASTM C1107 with a minimum 3-day compressive strength f'c = 5000 psi, and minimum 28-day bond strength = 2000 psi per ASTM C 882.*

PRELIMINARY - NOT FOR CONSTRUCTION

PRELIMINARY NOT FOR CONSTRUCTION

STRUCTURE NO.	STRUCTURE NAME	FEATURES INTERSECTED	LOCATION	U.S. DEPARTMENT OF TRANSPORTATION FEDERAL HIGHWAY ADMINISTRATION OFFICE OF FEDERAL LANDS HIGHWAY
1570-026	MADISON RIVER BRIDGE	MADISON RIVER	YELLOWSTONE NATIONAL PARK	

NO.	DATE	BY	REVISIONS	DESIGNED BY	DRAWN BY	CHECKED BY	PROJECT TEAM LEAD	SCALE	BRIDGE PLAN SHEET	DATE	RG / BRP NO.
				K.COX	K.COX	X.XXXX	B.OLTMANN	NO SCALE	10 of 26	APRIL 2026	RG3318-J

PIER BEARING (FIXED)

c:\pw_work_wfl\d0626775\S.1 - S.26 WY NP YELL 15(2) PLAN SHEETS.DGN [PIER BEARING (FIXED)]
21 April 2026 4:58 PM

PROJECT	SHEET NUMBER
WY NP YELL 15(2)	S.11

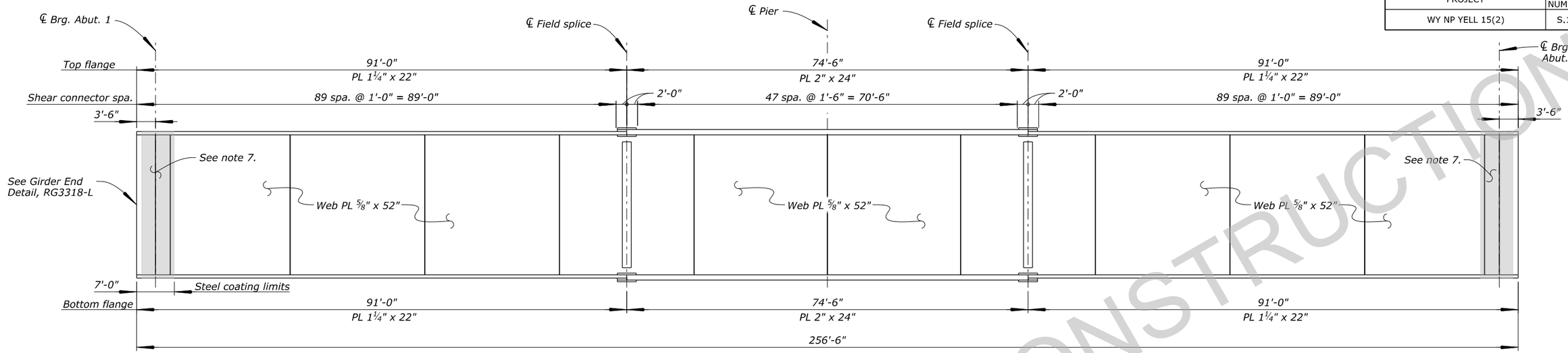

GIRDER ELEVATION

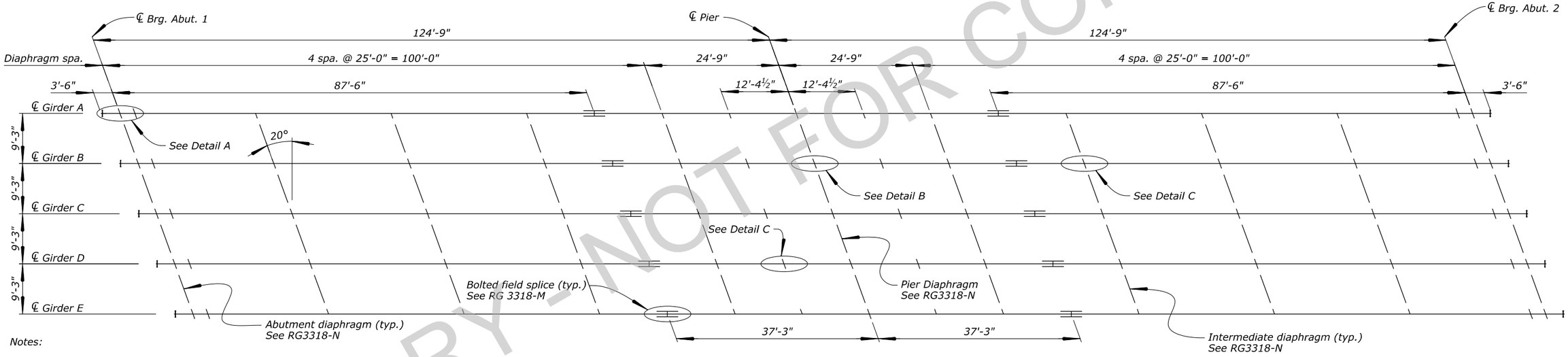

GIRDER FRAMING PLAN

Notes:

1. *Use fully automatic procedures for longitudinal flange to web welds. For weld details, see RG3318-L.*
2. *Perform welding in the following sequence: flange and web splices, flange to web welds, intermediate diaphragm connection plate to web or flange welds, bearing & jacking stiffener to web or flange welds, then shear connectors to top flanges & web ends.*
3. *Dimensions shown are either horizontal or vertical. Fabricate girders along the bridge grade. Fabricate intermediate diaphragm connection plates parallel to support skew.*
4. *Do not use transportation, erection, or construction methods that require drilling holes or welding to the girders.*
5. *Under full dead load, beam end and all bearing & jacking stiffeners will be vertical within applicable AASHTO/AWS fabrication and construction tolerance.*
6. *Provide plates for stiffeners and connection plates conforming to AASHTO M 270, Grade 50W (ASTM A709, Grade 50W)*
7. *Paint all steel elements within coating limits, including girders, stiffeners, diaphragms, sole plate. Do not paint portion of gider embedded in endwall.*

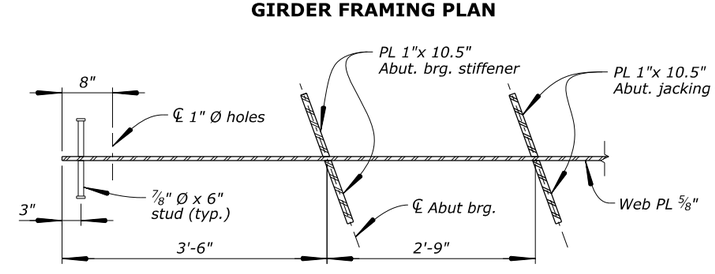

DETAIL A

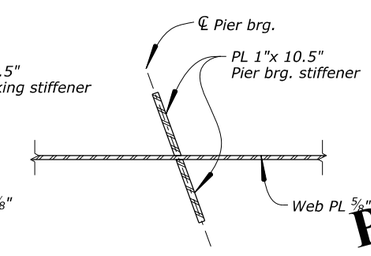

DETAIL B

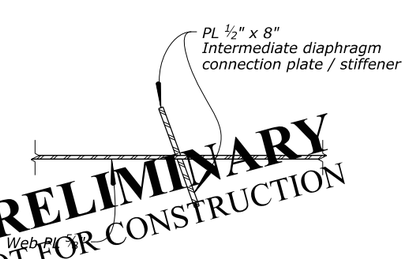

DETAIL C

PRELIMINARY - NOT FOR CONSTRUCTION

STRUCTURE NO.	STRUCTURE NAME	FEATURES INTERSECTED	LOCATION	U.S. DEPARTMENT OF TRANSPORTATION FEDERAL HIGHWAY ADMINISTRATION OFFICE OF FEDERAL LANDS HIGHWAY
1570-026	MADISON RIVER BRIDGE	MADISON RIVER	YELLOWSTONE NATIONAL PARK	

NO.	DATE	BY	REVISIONS	DESIGNED BY	DRAWN BY	CHECKED BY	PROJECT TEAM LEAD	SCALE	BRIDGE PLAN SHEET	DATE	RG / BRP NO.
				K.COX	K.COX	X.XXXX	B.OLTMANN	NO SCALE	11 of 26	APRIL 2026	RG3318-K

GIRDER LAYOUT

c:\pw_work_wfl\d0626775\S.1 - S.26 WY NP YELL 15(2) PLAN SHEETS.DGN [GIRDER LAYOUT]
21 April 2026 5:00 PM

PROJECT	SHEET NUMBER
WY NP YELL 15(2)	S.12

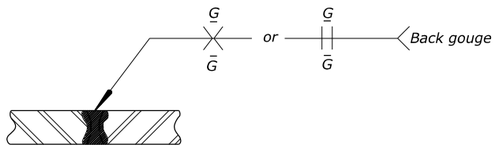

Weld Note:

1. *See ANSI/AASHTO/AWS D1.5 Section 2.9 and Section 9.20. Ground flush all butt joints of flange and web plates by grinding parallel to the longitudinal girder direction in accordance with Section 3.6.3.*
2. *Submit locations of welded splices for approval.*

TYPICAL WELDED FLANGE AND WEB SPLICE

THICKNESS OF THICKEST PART JOINED	MIN. FILLET WELD SIZES
3/4" or less	1/4"
Over 3/4"	5/16"

MINIMUM REQUIRED FILLET WELDS FOR:

1. *Flange-to-web welds*
2. *Intermediate diaphragm connection plate to web & flange welds*
3. *Bearing and jacking stiffener to web & top flange welds*

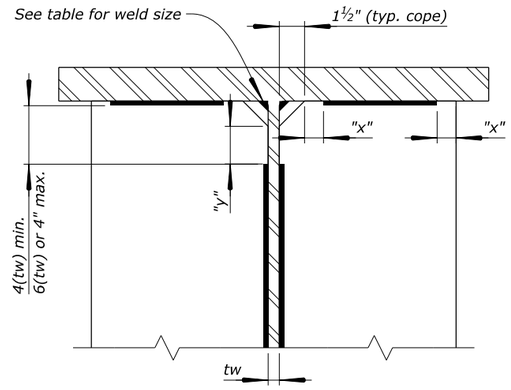

Stiffener/Connection Plate Notes:

1. *Cope all intermediate diaphragm connection plates, bearing stiffeners, and jacking stiffeners top & bottom as shown above.*

   "x" = 1/4" ± 1/8"
   "y" = 1/2" ± 1/4"

2. *Bearing and jacking stiffeners milled to bear against the bottom flange only.*

COPE AND WELD DETAIL

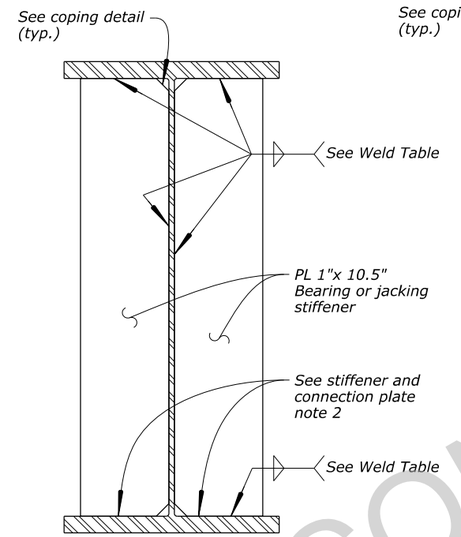

BEARING AND JACKING STIFFENER

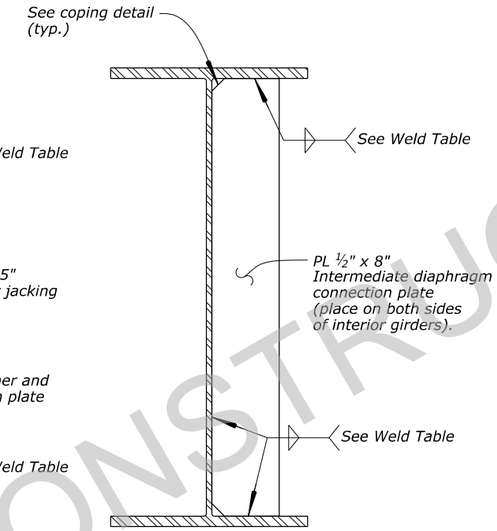

INTERMEDIATE DIAPHRAGM CONNECTION PLATE

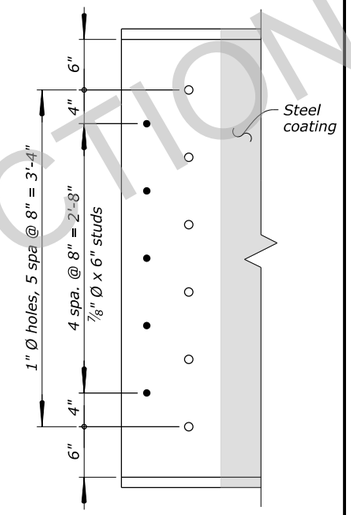

GIRDER END DETAIL

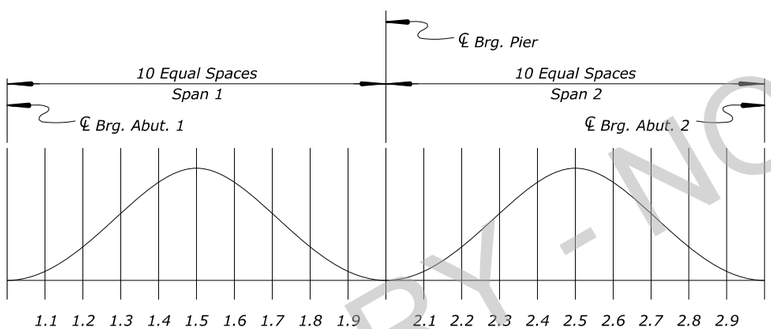

CAMBER DIAGRAM

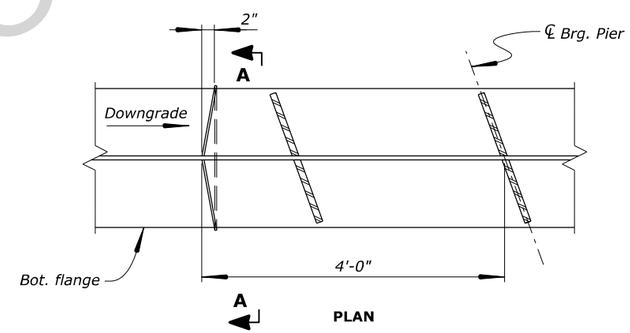

DRIP PLATE DETAILS

CAMBER TABLE

ORDINATES (inches)			SPAN 1									SPAN 2								
			1.1	1.2	1.3	1.4	1.5	1.6	1.7	1.8	1.9	2.1	2.2	2.3	2.4	2.5	2.6	2.7	2.8	2.9
DL CAMBER	ALL GIRDERS	STL. DEFL.																		
		CONC. DEFL.																		
		SUPER DL DEFL.																		
		TOTAL CAMBER																		

Camber Notes & Table Legend:

1. *Camber due to fabrication tolerance is not included in the camber table.*
2. *Follow AASHTO/AWS D1.5M/D1.5 when calculating camber tolerance during fabrication.*

STL. DEFL. = *Camber due to structural steel deflection.*

CONC. DEFL. = *Camber due to concrete slab deflection and estimated shrinkage.*

SUPER DL DEFL. = *Camber due to superimposed dead load deflections (bridge rails, wearing & future wearing surface, future utilities, and sidewalk.*

TOTAL CAMBER = *STL. DEFL. + CONC. DEFL. + SUPER DL DEFL.*

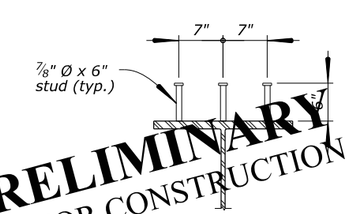

SHEAR CONNECTOR (STUD) DETAIL

PRELIMINARY - NOT FOR CONSTRUCTION
PRELIMINARY NOT FOR CONSTRUCTION

STRUCTURE NO.	STRUCTURE NAME	FEATURES INTERSECTED	LOCATION	U.S. DEPARTMENT OF TRANSPORTATION FEDERAL HIGHWAY ADMINISTRATION OFFICE OF FEDERAL LANDS HIGHWAY
1570-026	MADISON RIVER BRIDGE	MADISON RIVER	YELLOWSTONE NATIONAL PARK	

NO.	DATE	BY	REVISIONS	DESIGNED BY	DRAWN BY	CHECKED BY	PROJECT TEAM LEAD	SCALE	BRIDGE PLAN SHEET	DATE	RG / BRP NO.
				K.COX	K.COX	X.XXXX	B.OLTMANN	NO SCALE	12 of 26	APRIL 2026	RG3318-L

GIRDER DETAILS

c:\pw_work_wfl\d0626775\S.1 - S.26 WY NP YELL 15(2) PLAN SHEETS.DGN [GIRDER DETAILS]
21 April 2026 5:09 PM

PROJECT	SHEET NUMBER
WY NP YELL 15(2)	S.13

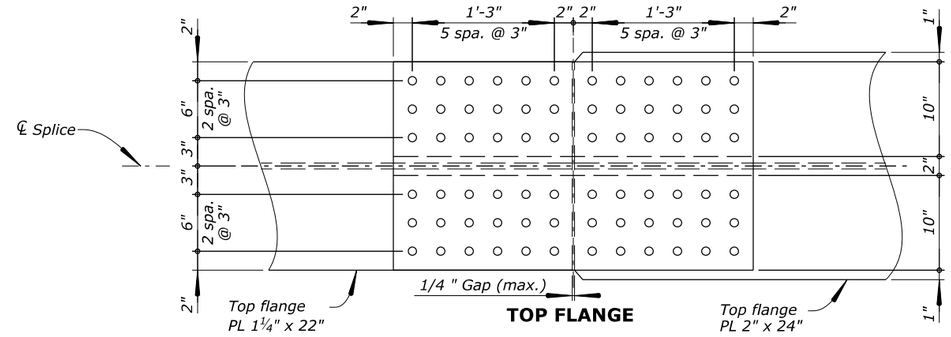

TOP FLANGE

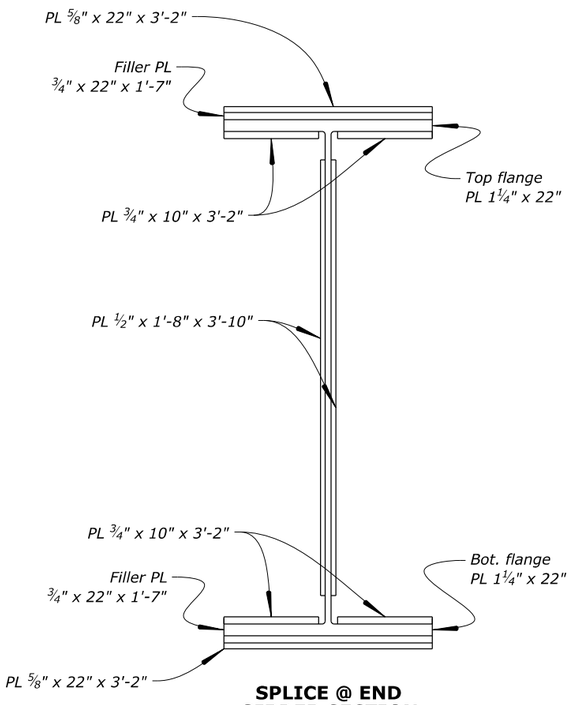

SPLICE @ END GIRDER SECTION

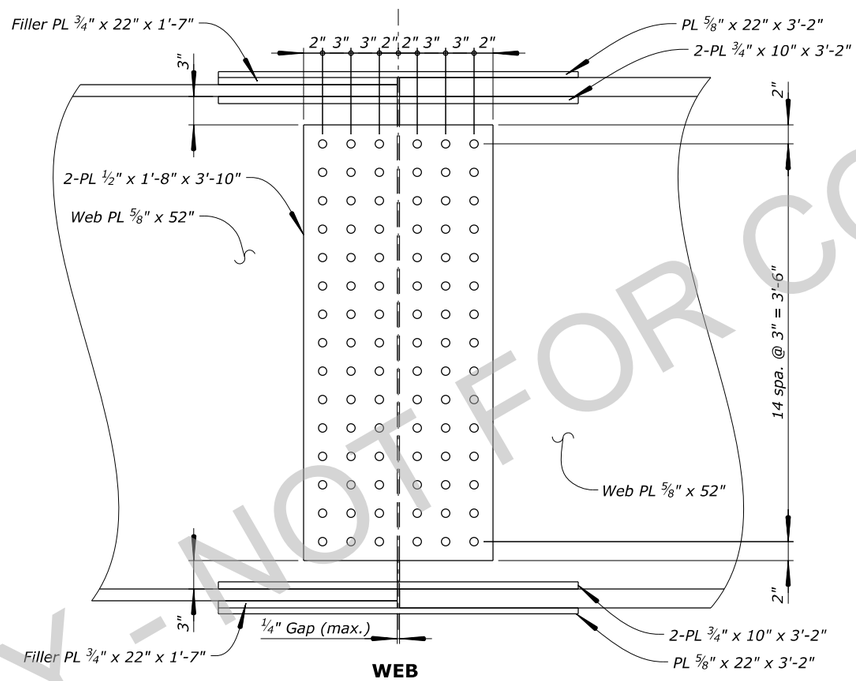

WEB

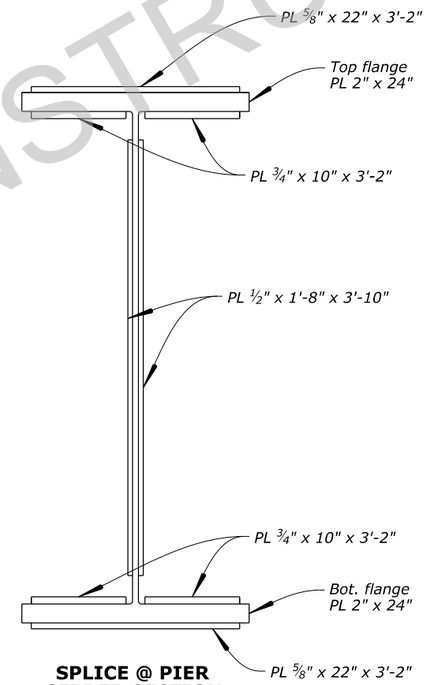

SPLICE @ PIER GIRDER SECTION

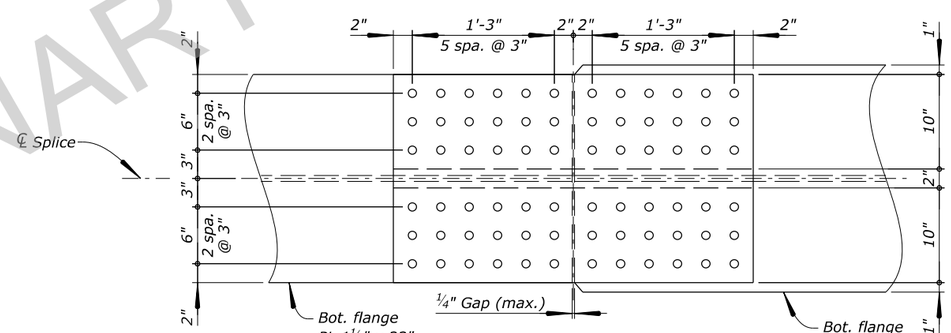

BOTTOM FLANGE

Notes:

1. *All bolts are ⅞" dia. fasteners meeting the requirements of ASTM F3125, Grade A325 or F1852, Type 3.*
2. *All plates for splices conform to AASHTO M 270, Grade 50W (ASTM 709, Grade 50W).*
3. *All holes are 15/16" dia., unless noted otherwise.*
4. *Exclude bolt threads from shear planes and provide Class B faying surfaces.*
5. *Install fasteners with the nuts located on the interior side of the girders and on the top side of the flanges.*
6. *Shear connectors not shown for clarity.*
7. *Bolted field splice locations shown on RG3318-K.*

PRELIMINARY - NOT FOR CONSTRUCTION

PRELIMINARY
NOT FOR CONSTRUCTION

STRUCTURE NO.	STRUCTURE NAME	FEATURES INTERSECTED	LOCATION	U.S. DEPARTMENT OF TRANSPORTATION FEDERAL HIGHWAY ADMINISTRATION OFFICE OF FEDERAL LANDS HIGHWAY
1570-026	MADISON RIVER BRIDGE	MADISON RIVER	YELLOWSTONE NATIONAL PARK	

NO.	DATE	BY	REVISIONS	DESIGNED BY	DRAWN BY	CHECKED BY	PROJECT TEAM LEAD	SCALE	BRIDGE PLAN SHEET	DATE	RG / BRP NO.
				K.COX	K.COX	X.XXXX	B.OLTMANN	¾" = 1'0"	13 of 26	APRIL 2026	RG3318-M

GIRDER FIELD SPLICES

c:\pw_work_wfl\d0626775\S.1 - S.26 WY NP YELL 15(2) PLAN SHEETS.DGN [GIRDER FIELD SPLICES]
21 April 2026 5:28 PM

PROJECT	SHEET NUMBER
WY NP YELL 15(2)	S.14

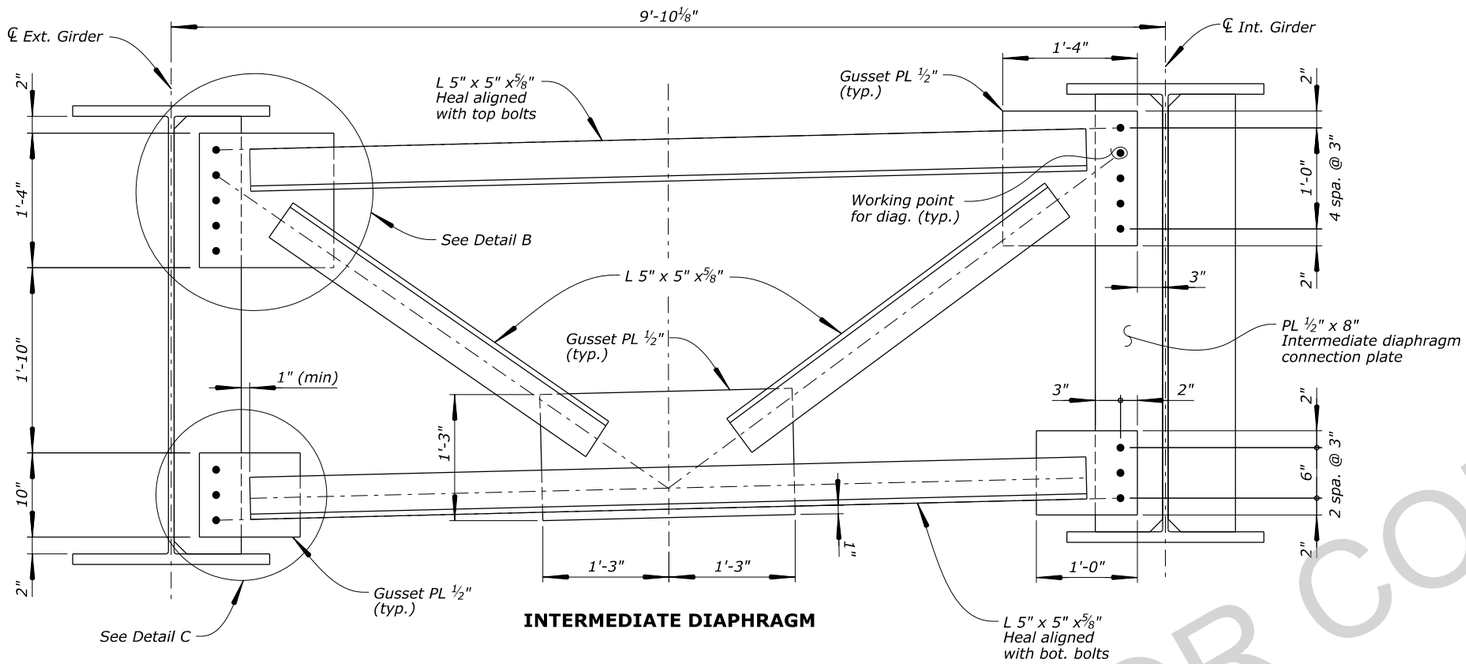

INTERMEDIATE DIAPHRAGM

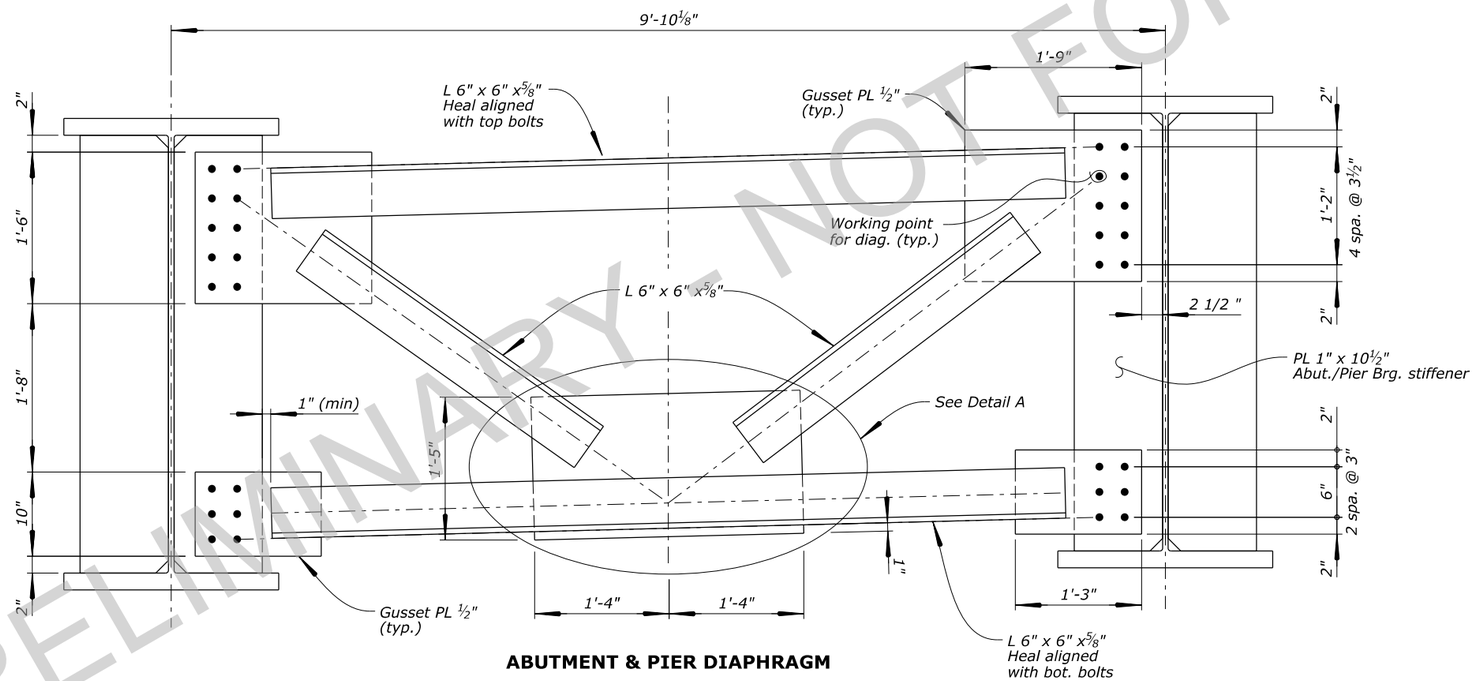

ABUTMENT & PIER DIAPHRAGM

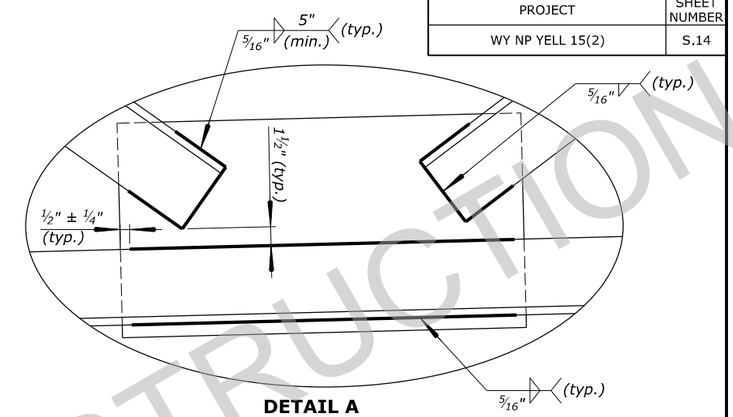

DETAIL A

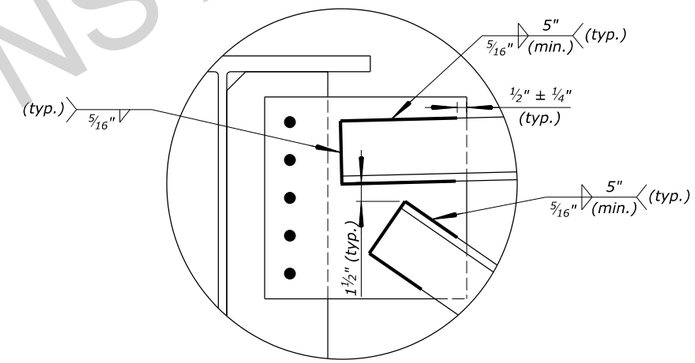

DETAIL B

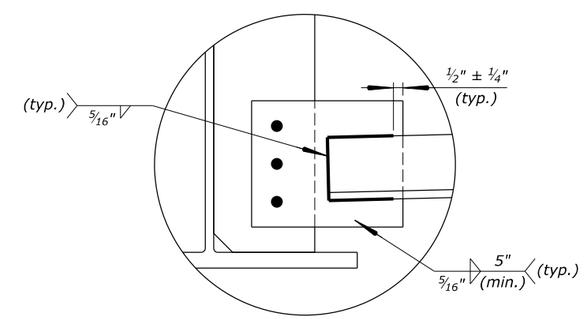

DETAIL C

Notes:

1. *All dimensions shown are taken along skew and are typical.*
2. *All bolts are ⅞" dia. fasteners meeting the requirements of ASTM F3125, Grade A325 or F1852, Type 3.*
3. *All plates conform to AASHTO M 270, Grade 50W (ASTM 709, Grade 50W).*
4. *Provide standard oversize holes in a single ply of the gusset plate-stiffener connections, and 15/16" dia. holes otherwise.*

PRELIMINARY - NOT FOR CONSTRUCTION

PRELIMINARY
NOT FOR CONSTRUCTION

STRUCTURE NO.	STRUCTURE NAME	FEATURES INTERSECTED	LOCATION	U.S. DEPARTMENT OF TRANSPORTATION FEDERAL HIGHWAY ADMINISTRATION OFFICE OF FEDERAL LANDS HIGHWAY
1570-026	MADISON RIVER BRIDGE	MADISON RIVER	YELLOWSTONE NATIONAL PARK	

NO.	DATE	BY	REVISIONS	DESIGNED BY	DRAWN BY	CHECKED BY	PROJECT TEAM LEAD	SCALE	BRIDGE PLAN SHEET	DATE	RG / BRP NO.
				K.COX	K.COX	X.XXXX	B.OLTMANN	NO SCALE	14 of 26	APRIL 2026	RG3318-N

DIAPHRAGMS

c:\pw_work_wfl\d0626775\S.1 - S.26 WY NP YELL 15(2) PLAN SHEETS.DGN [DIAPHRAGMS]
22 April 2026 6:55 AM

PROJECT	SHEET NUMBER
WY NP YELL 15(2)	S.15

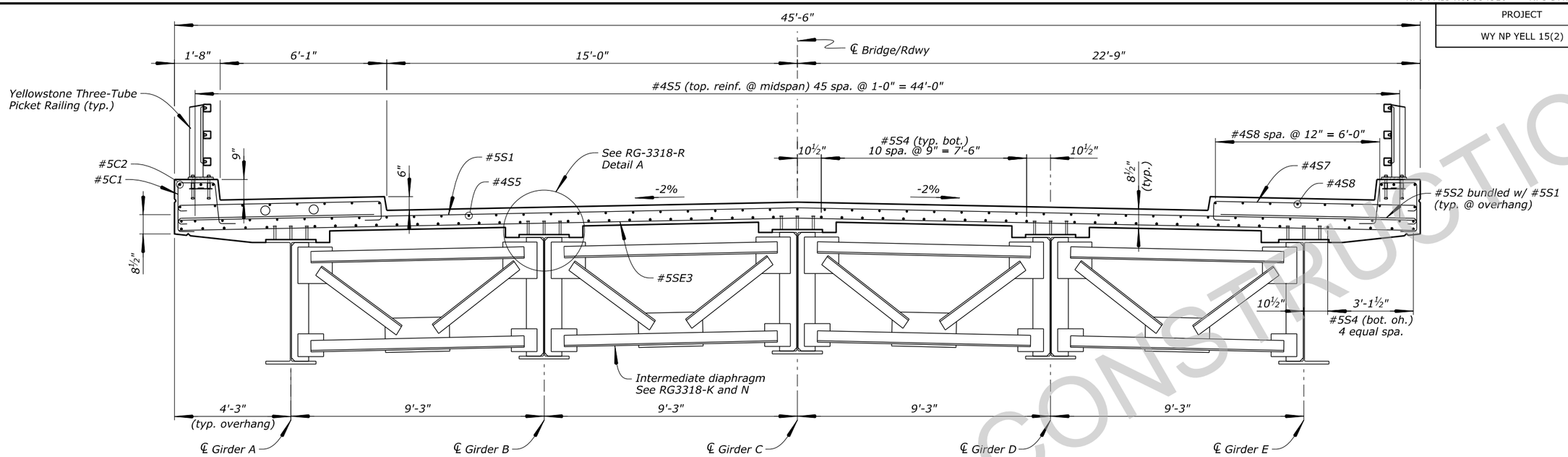

TYPICAL SECTION AT MIDSPAN

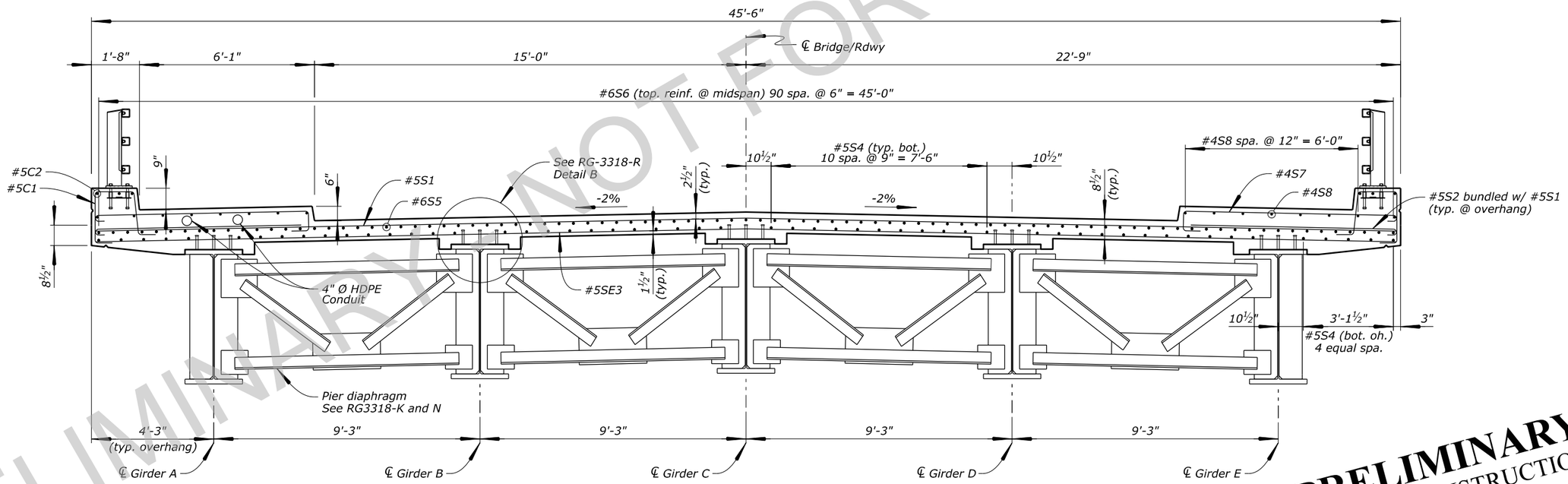

TYPICAL SECTION AT PIER

Notes:

1. *See additional deck and reinforcement details in RG3318-P through R.*
2. *Typical Sections at Midspan and Pier are taken perpendicular to bridge alignment. Transverse reinforcement and diaphragms are placed parallel to skew and are shown illustratively.*

PRELIMINARY NOT FOR CONSTRUCTION

STRUCTURE NO.	STRUCTURE NAME	FEATURES INTERSECTED	LOCATION	U.S. DEPARTMENT OF TRANSPORTATION FEDERAL HIGHWAY ADMINISTRATION OFFICE OF FEDERAL LANDS HIGHWAY
1570-026	MADISON RIVER BRIDGE	MADISON RIVER	YELLOWSTONE NATIONAL PARK	

NO.	DATE	BY	REVISIONS	DESIGNED BY	DRAWN BY	CHECKED BY	PROJECT TEAM LEAD	SCALE	BRIDGE PLAN SHEET	DATE	RG / BRP NO.
				K.COX	K.COX	X.XXXX	B.OLTMANN	NO SCALE	15 of 26	APRIL 2026	RG3318-O

TYPICAL SECTIONS

c:\pw_work_wfl\d0626275\S.1 - S.26 WY NP YELL 15(2) PLAN SHEETS.DGN [TYPICAL SECTIONS]
22 April 2026 7:04 AM

PROJECT	SHEET NUMBER
WY NP YELL 15(2)	S.16

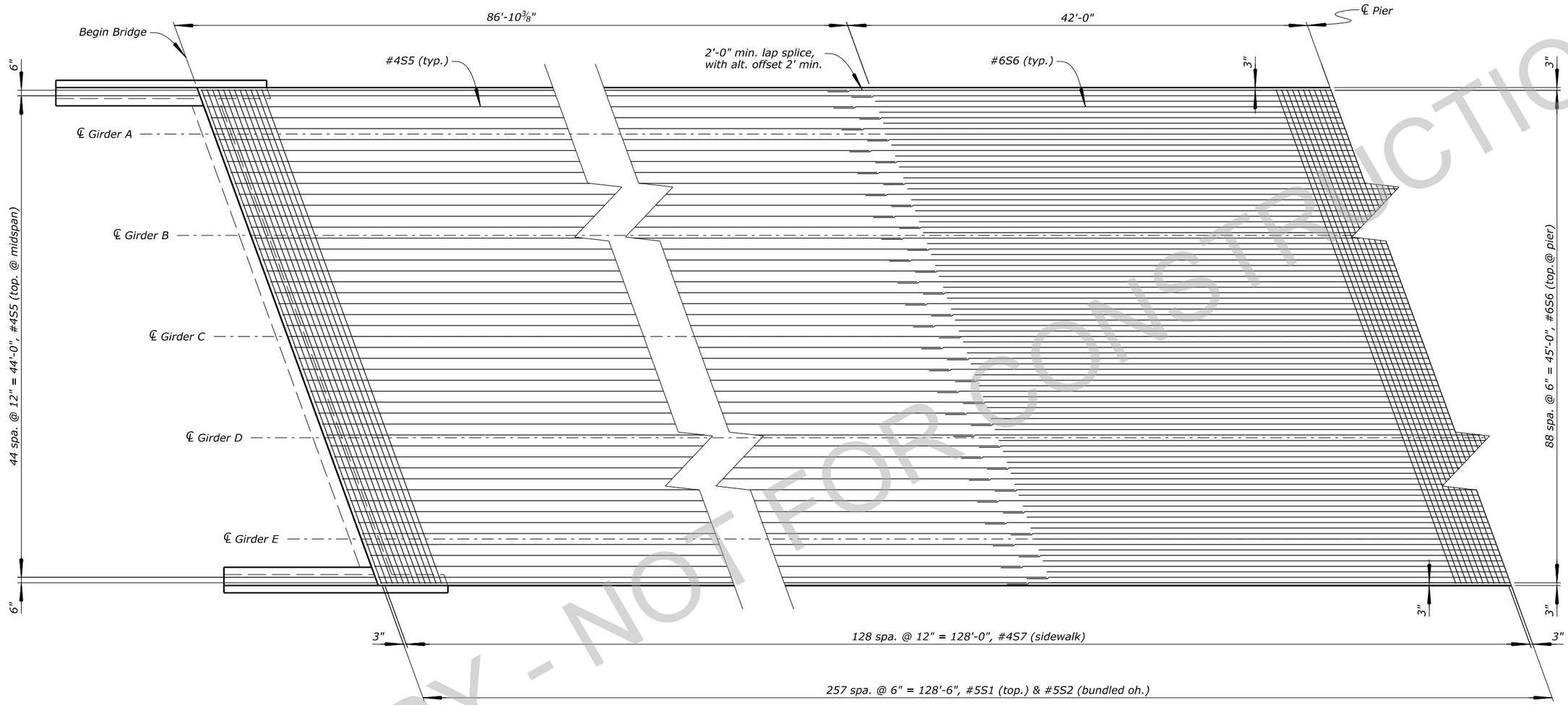

TOP REINFORCEMENT DECK PLAN

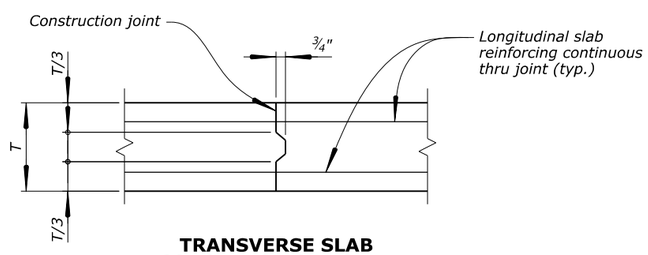

TRANSVERSE SLAB CONSTRUCTION JOINT

Notes:

1. *Stagger location of all lap splices a minimum of 2'-0" in deck, sidewalk, and curb between adjacent bars. Minimum lap splice length:*
   #4 bars.....2'-0"
   #5 bars.....2'-6"
   #6 bars.....3'-0"
2. *Do not splice transverse reinforcing steel in the deck slab.*
3. *Curb and sidewalk and their reinforcement not shown for clarity.*

PRELIMINARY - NOT FOR CONSTRUCTION

PRELIMINARY
NOT FOR CONSTRUCTION

STRUCTURE NO.	STRUCTURE NAME	FEATURES INTERSECTED	LOCATION	U.S. DEPARTMENT OF TRANSPORTATION FEDERAL HIGHWAY ADMINISTRATION OFFICE OF FEDERAL LANDS HIGHWAY
1570-026	MADISON RIVER BRIDGE	MADISON RIVER	YELLOWSTONE NATIONAL PARK	

NO.	DATE	BY	REVISIONS	DESIGNED BY	DRAWN BY	CHECKED BY	PROJECT TEAM LEAD	SCALE	BRIDGE PLAN SHEET	DATE	RG / BRP NO.
				K.COX	K.COX	X.XXXX	B.OLTMANN	NO SCALE	16 of 26	APRIL 2026	RG3318-P

DECK PLAN (1 OF 2)

c:\pw_work_wfl\d0626775\S.1 - S.26 WY NP YELL 15(2) PLAN SHEETS.DGN [DECK PLAN (1 OF 2)]
22 April 2026 7:33 AM

PROJECT	SHEET NUMBER
WY NP YELL 15(2)	S.17

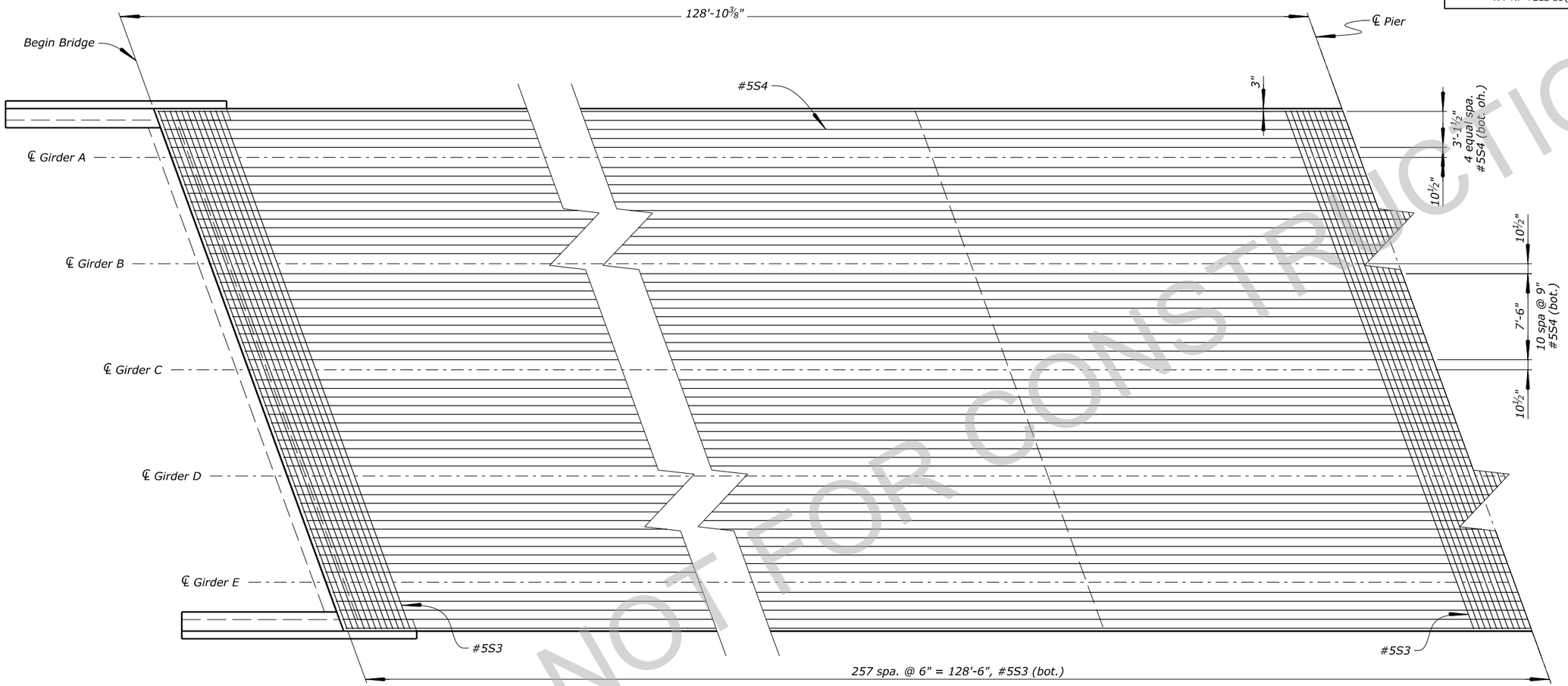

BOTTOM REINFORCEMENT DECK PLAN

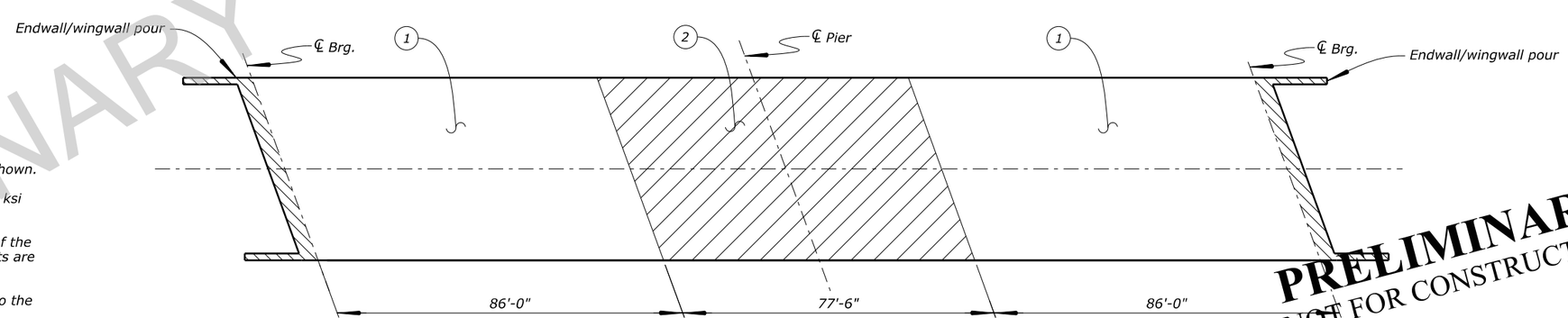

DECK POUR SEQUENCE

Deck Sequence Notes:

1. *Place each placement segment in numerical sequence shown.*
2. *Attain a minimum concrete compressive strength of 2.5 ksi before subsequent placements are made.*
3. *Place and finish the slab concrete across the full width of the bridge within each pour segment. Longitudinal slab joints are not allowed.*
4. *Alternative deck pouring sequences may be submitted to the CO for approval.*
6. *Place sidewalk in the same placement sequence as the deck.*

PRELIMINARY - NOT FOR CONSTRUCTION

PRELIMINARY
NOT FOR CONSTRUCTION

STRUCTURE NO.	STRUCTURE NAME	FEATURES INTERSECTED	LOCATION	U.S. DEPARTMENT OF TRANSPORTATION FEDERAL HIGHWAY ADMINISTRATION OFFICE OF FEDERAL LANDS HIGHWAY
1570-026	MADISON RIVER BRIDGE	MADISON RIVER	YELLOWSTONE NATIONAL PARK	

NO.	DATE	BY	REVISIONS	DESIGNED BY	DRAWN BY	CHECKED BY	PROJECT TEAM LEAD	SCALE	BRIDGE PLAN SHEET	DATE	RG / BRP NO.
				K.COX	K.COX	X.XXXX	B.OLTMANN	NO SCALE	17 of 26	APRIL 2026	RG3318-Q

DECK PLAN (2 OF 2)

c:\pw_work_wfl\d0626775\S.1 - S.26 WY NP YELL 15(2) PLAN SHEETS.DGN [DECK PLAN (2 OF 2)]
22 April 2026 7:35 AM

PROJECT	SHEET NUMBER
WY NP YELL 15(2)	S.18

INTENTIONALLY LEFT BLANK

PRELIMINARY - NOT FOR CONSTRUCTION

PRELIMINARY
NOT FOR CONSTRUCTION

c:\pw_work_wfl\d0626775\S.1 - S.26 WY NP YELL 15(2) PLAN SHEETS.DGN [DECK AND SIDEWALK DETAILS]
22 April 2026 7:35 AM

STRUCTURE NO.	STRUCTURE NAME	FEATURES INTERSECTED	LOCATION	U.S. DEPARTMENT OF TRANSPORTATION FEDERAL HIGHWAY ADMINISTRATION OFFICE OF FEDERAL LANDS HIGHWAY
1570-026	MADISON RIVER BRIDGE	MADISON RIVER	YELLOWSTONE NATIONAL PARK	

NO.	DATE	BY	REVISIONS	DESIGNED BY	DRAWN BY	CHECKED BY	PROJECT TEAM LEAD	SCALE	BRIDGE PLAN SHEET	DATE	RG / BRP NO.
				K.COX	K.COX	X.XXXX	B.OLTMANN	NO SCALE	18 of 26	APRIL 2026	RG3318-R

DECK AND SIDEWALK DETAILS

PROJECT	SHEET NUMBER
WY NP YELL 15(2)	S.19

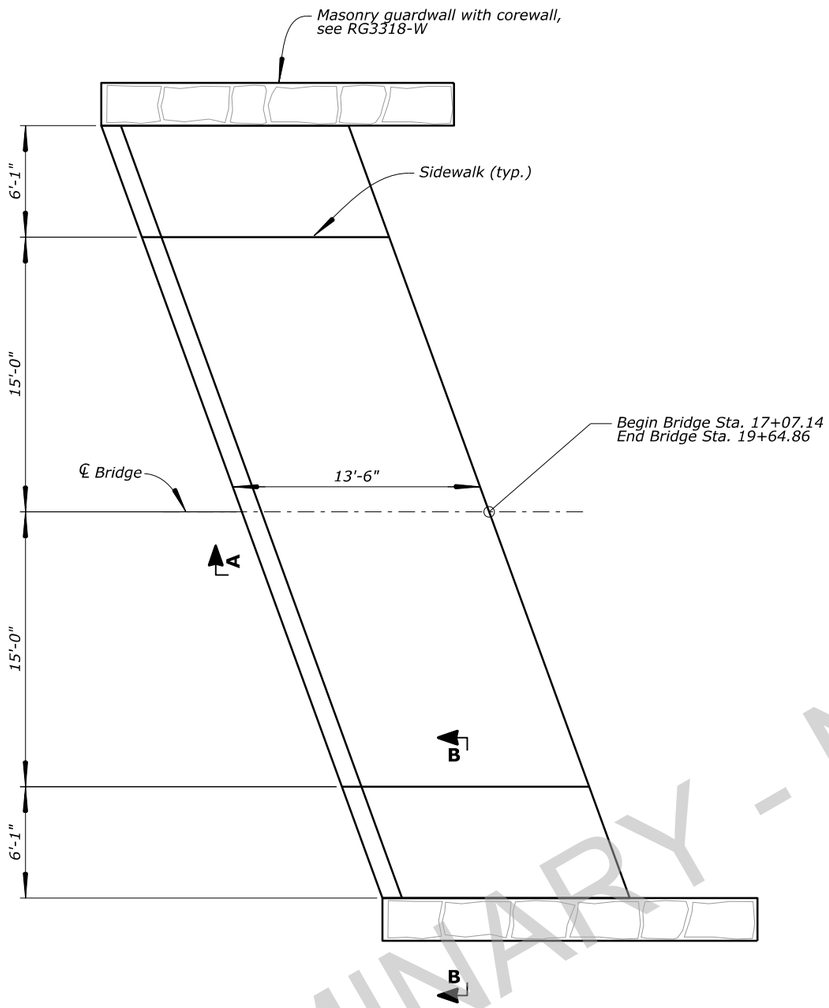

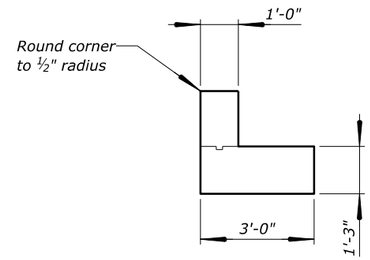

DETAIL C
(Taken perpindicular to member)

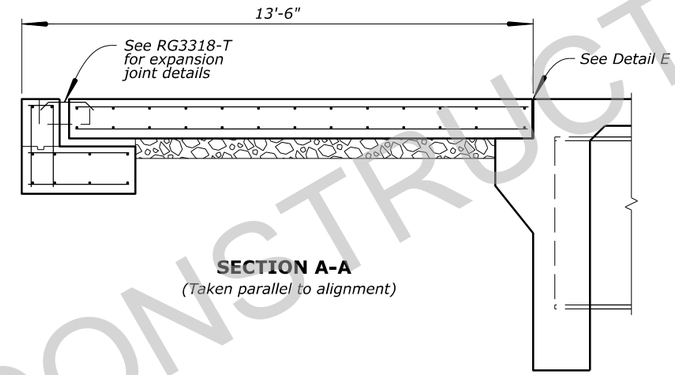

SECTION A-A
(Taken parallel to alignment)

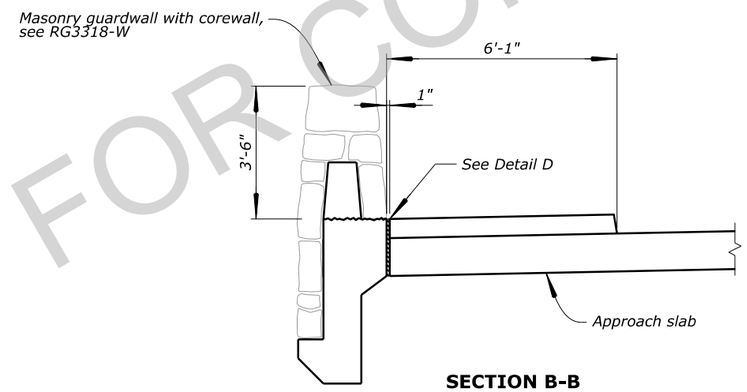

SECTION B-B

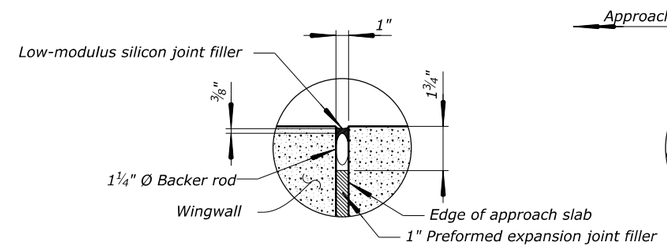

DETAIL D
No Scale

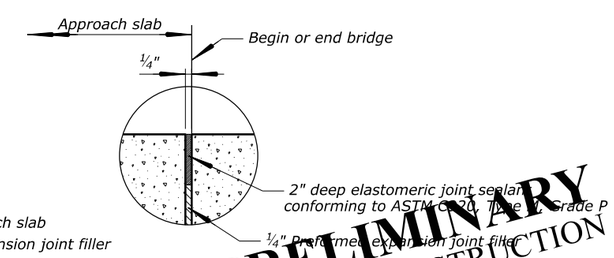

DETAIL E
No Scale

PRELIMINARY - NOT FOR CONSTRUCTION
PRELIMINARY
NOT FOR CONSTRUCTION

STRUCTURE NO.	STRUCTURE NAME	FEATURES INTERSECTED	LOCATION	U.S. DEPARTMENT OF TRANSPORTATION FEDERAL HIGHWAY ADMINISTRATION OFFICE OF FEDERAL LANDS HIGHWAY
1570-026	MADISON RIVER BRIDGE	MADISON RIVER	YELLOWSTONE NATIONAL PARK	

NO.	DATE	BY	REVISIONS	DESIGNED BY	DRAWN BY	CHECKED BY	PROJECT TEAM LEAD	SCALE	BRIDGE PLAN SHEET	DATE	RG / BRP NO.
				K.COX	K.COX	X.XXXX	B.OLTMANN	NO SCALE	19 of 26	APRIL 2026	RG3318-S

APPROACH SLAB

c:\pw_work_wfl\d0626775\S.1 - S.26 WY NP YELL 15(2) PLAN SHEETS.DGN [APPROACH SLAB]
22 April 2026 7:35 AM

PROJECT	SHEET NUMBER
WY NP YELL 15(2)	S.20

INTENTIONALLY LEFT BLANK

PRELIMINARY - NOT FOR CONSTRUCTION

PRELIMINARY
NOT FOR CONSTRUCTION

c:\pw_work_wff\d0626773\S.1 - S.26 WY NP YELL 15(2) PLAN SHEETS.DGN [EXPANSION JOINT]
22 April 2026 7:41 AM

STRUCTURE NO.	STRUCTURE NAME	FEATURES INTERSECTED	LOCATION	U.S. DEPARTMENT OF TRANSPORTATION FEDERAL HIGHWAY ADMINISTRATION OFFICE OF FEDERAL LANDS HIGHWAY
1570-026	MADISON RIVER BRIDGE	MADISON RIVER	YELLOWSTONE NATIONAL PARK	

NO.	DATE	BY	REVISIONS	DESIGNED BY	DRAWN BY	CHECKED BY	PROJECT TEAM LEAD	SCALE	BRIDGE PLAN SHEET	DATE	RG / BRP NO.
				K.COX	K.COX	X.XXXX	B.OLTMANN	NO SCALE	20 of 26	APRIL 2026	RG3318-T

EXPANSION JOINT

PROJECT	SHEET NUMBER
WY NP YELL 15(2)	S.21

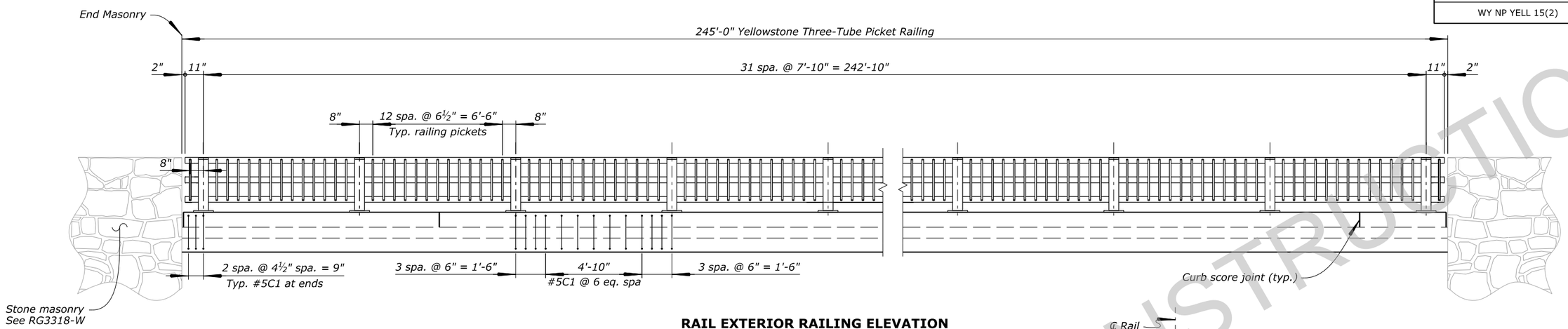

RAIL EXTERIOR RAILING ELEVATION
(Upstream railing shown, downstream similar)

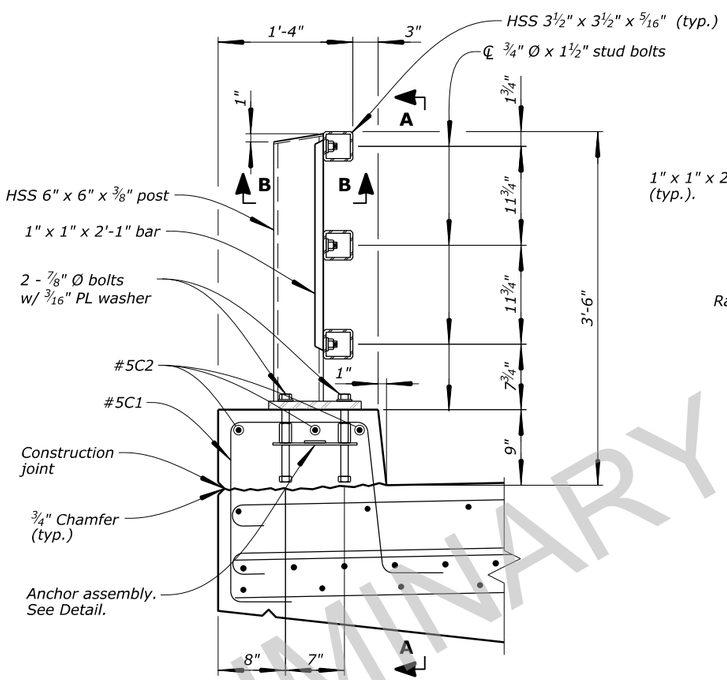

TYPICAL CURB SECTION

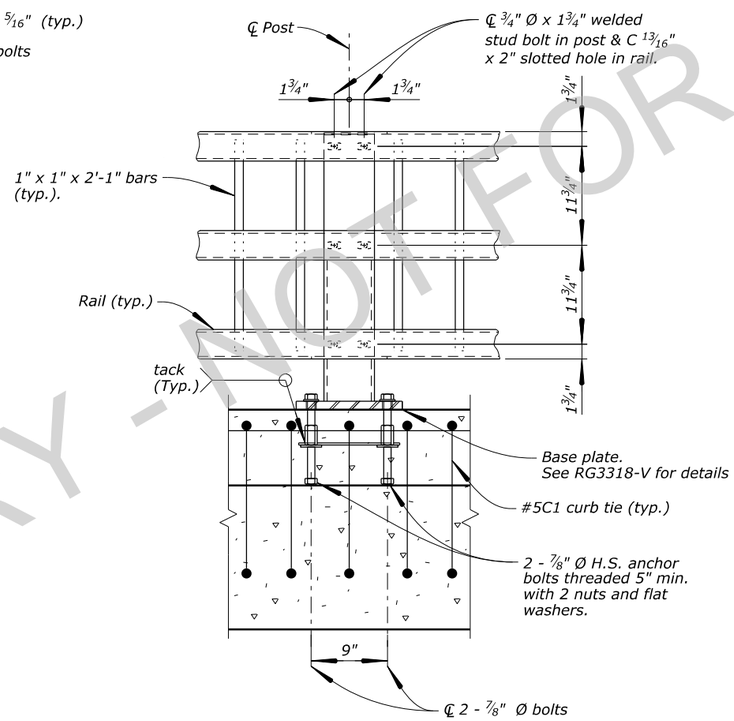

VIEW A-A

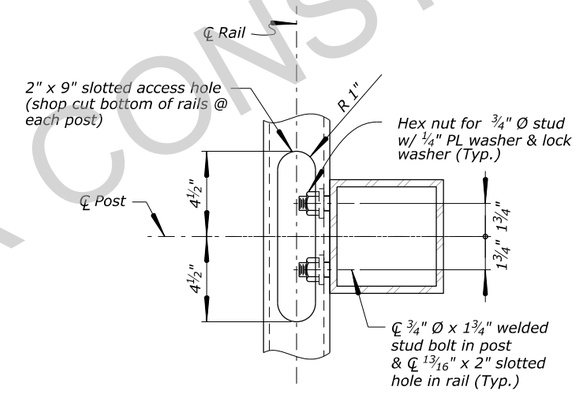

SECTION B-B

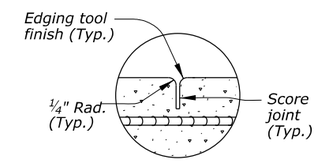

SCORE JOINT

Bridge Railing Notes:

1. *Yellowstone Picket Fence steel bridge railing has been successfully crash tested to meet the criteria for TL-2 of NCHRP Report350.*

2. *Materials:*
   Provide steel for base plates and splice sleeves conforming to AASHTO M 270, Grade 50, and steel for all other plates, plate washers and bars conforming to ASTM A36. Provide Hollow Structural Sections (HSS) for posts and rails conforming to ASTM A500, Grade B.

   Coat all components of the bridge rail, except anchor assemblies, post base shims, and rail splice sleeves, see Section 563 for required coating details and specifications. Galvanize post base shims, anchor assemblies, and rail splice sleeves according to AASHTO M 111 (ASTM A123).

   Provide nuts, bolts, and washers for structural tube rail systems conforming to ASTM F3125, Grade A325, Type 3, Heavy Hex Style, unless otherwise noted on the plans. Galvanize hardware according to ANSI/AASHTO M 232 (ASTM A153). Provide hex coupling nuts conforming to ASTM A563, Grade C,D, or DH with a center stop. Provide stud bolts conforming to AASHTO M 169 (ASTM A108), Grade 1016 through 1030, inclusive. Provide non-shrink type grout conforming to ASTM C1107.

3. *Fabrication:*
   Shop fabricate structural steel. Submit shop drawings for approval before fabrication. Weld according to ANSI/AASHTO/AWS 01.5 using an ANSI certified welder. Weld railing stud bolts according to ANSI/AASHTO/AWS 01.5, Chapter 7. Fabricate steel before galvanizing or coating. Provide rail splice assemblies as shown in the plans, ensure rail segments are continuous over at least 3 posts.

4. *Erection:*
   Do not field cut or weld. Set rail posts vertically and erect the railing parallel to grade. Ensure the completed installation does not reflect unevenness in the structure. Provide steel shim plates as required to align the railing

PRELIMINARY - NOT FOR CONSTRUCTION

PRELIMINARY
NOT FOR CONSTRUCTION

STRUCTURE NO.	STRUCTURE NAME	FEATURES INTERSECTED	LOCATION	U.S. DEPARTMENT OF TRANSPORTATION FEDERAL HIGHWAY ADMINISTRATION OFFICE OF FEDERAL LANDS HIGHWAY
1570-026	MADISON RIVER BRIDGE	MADISON RIVER	YELLOWSTONE NATIONAL PARK	

NO.	DATE	BY	REVISIONS	DESIGNED BY	DRAWN BY	CHECKED BY	PROJECT TEAM LEAD	SCALE	BRIDGE PLAN SHEET	DATE	RG / BRP NO.
				K.COX	K.COX	X.XXXX	B.OLTMANN	NO SCALE	21 of 26	APRIL 2026	RG3318-U

BRIDGE RAILING (1 OF 2)

c:\pw_work_wfl\d0626775\S.1 - S.26 WY NP YELL 15(2) PLAN SHEETS.DGN [BRIDGE RAILING (1 OF 2)]
22 April 2026 7:41 AM

PROJECT	SHEET NUMBER
WY NP YELL 15(2)	S.22

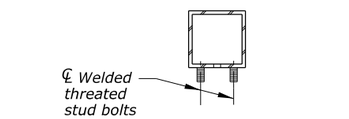

SECTION

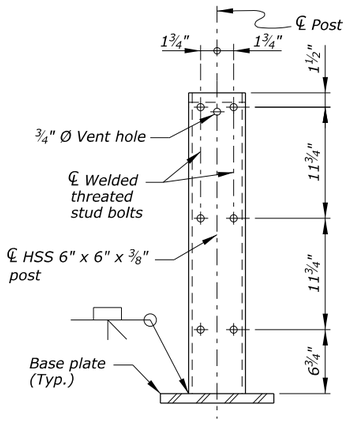

TRAFFIC FACE ELEVATION

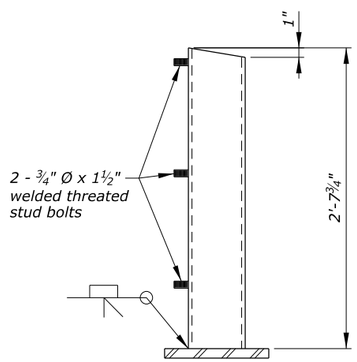

SIDE ELEVATION

RAIL POST
Scale: 1½" = 1'-0"

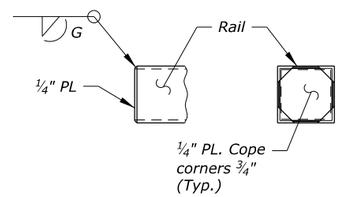

RAIL CAP DETAIL
(72 Req'd)
Scale: 1½" = 1'-0"

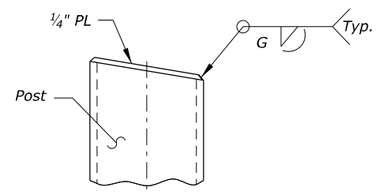

POST CAP DETAIL
Scale: 3" = 1'-0"

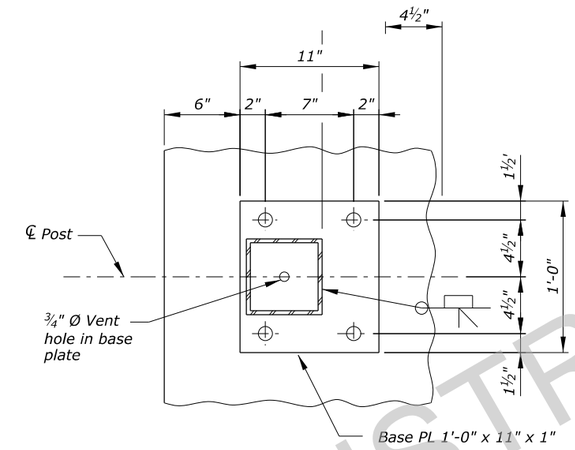

BASE PLATE
No Scale

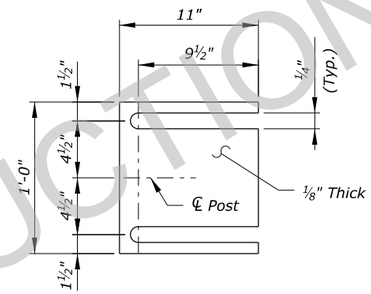

RAIL POST BASE SHIM
No Scale

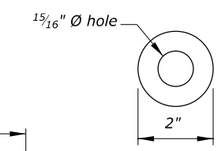

3/16" PL WASHER
No Scale

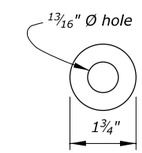

¼" PL WASHER
No Scale

Note: Place 9/16" Ø holes and slots in bottom of rail tubes.

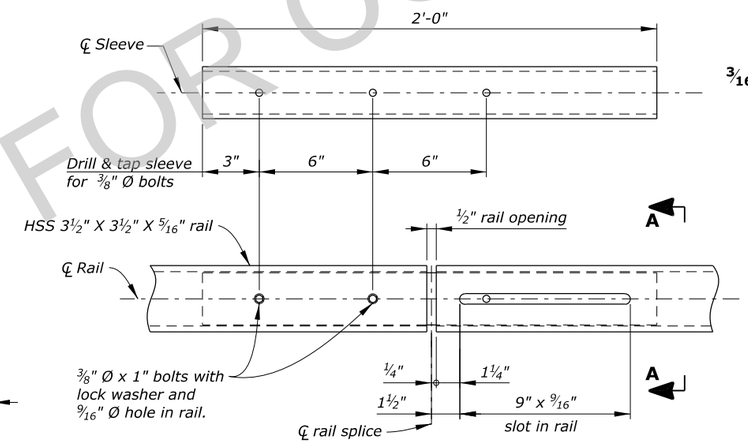

Note: Fabricate rail splice so that the 9" x 9/16" slot in rail tube is on the side of the splice furthest from the near rail post.

RAIL SPLICE DETAILS
Scale: 3" = 1'-0"

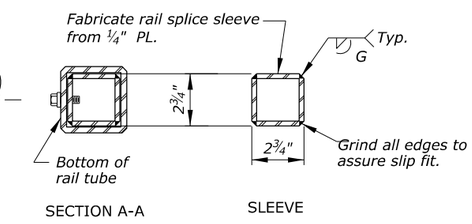

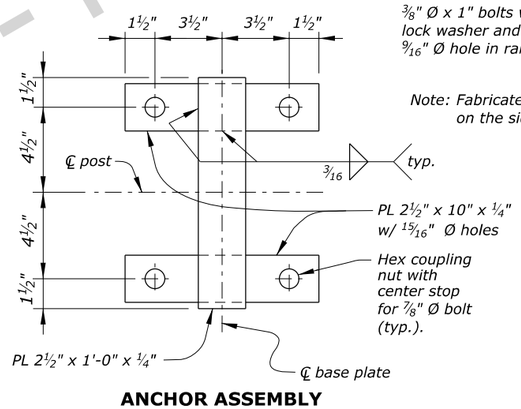

ANCHOR ASSEMBLY

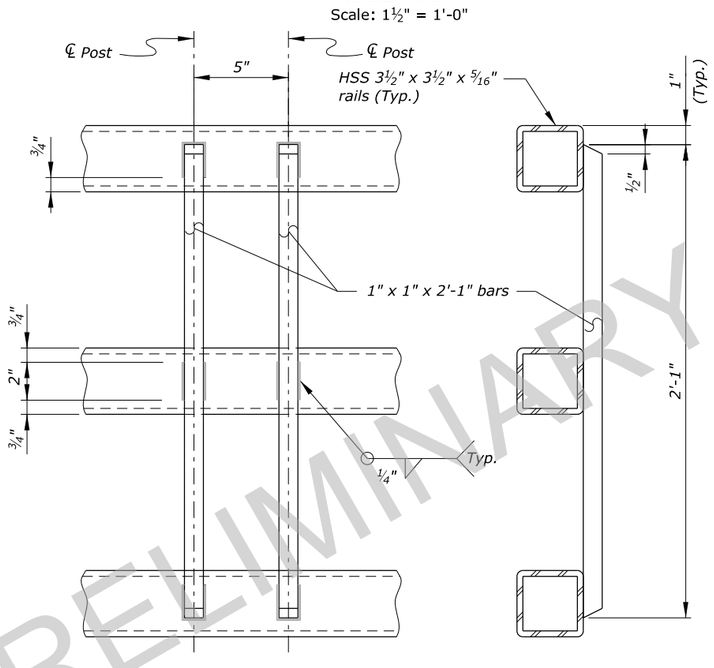

PRELIMINARY
NOT FOR CONSTRUCTION

PRELIMINARY - NOT FOR CONSTRUCTION

STRUCTURE NO.	STRUCTURE NAME	FEATURES INTERSECTED	LOCATION	U.S. DEPARTMENT OF TRANSPORTATION FEDERAL HIGHWAY ADMINISTRATION OFFICE OF FEDERAL LANDS HIGHWAY
1570-026	MADISON RIVER BRIDGE	MADISON RIVER	YELLOWSTONE NATIONAL PARK	

NO.	DATE	BY	REVISIONS	DESIGNED BY	DRAWN BY	CHECKED BY	PROJECT TEAM LEAD	SCALE	BRIDGE PLAN SHEET	DATE	RG / BRP NO.
				K.COX	K.COX	X.XXXX	B.OLTMANN	NO SCALE	22 of 26	APRIL 2026	RG3318-V

BRIDGE RAILING (2 OF 2)

c:\pw_work_wfl\d0626775\S.1 - S.26 WY NP YELL 15(2) PLAN SHEETS.DGN [BRIDGE RAILING (2 OF 2)]
22 April 2026 7:44 AM

PROJECT	SHEET NUMBER
WY NP YELL 15(2)	S.23

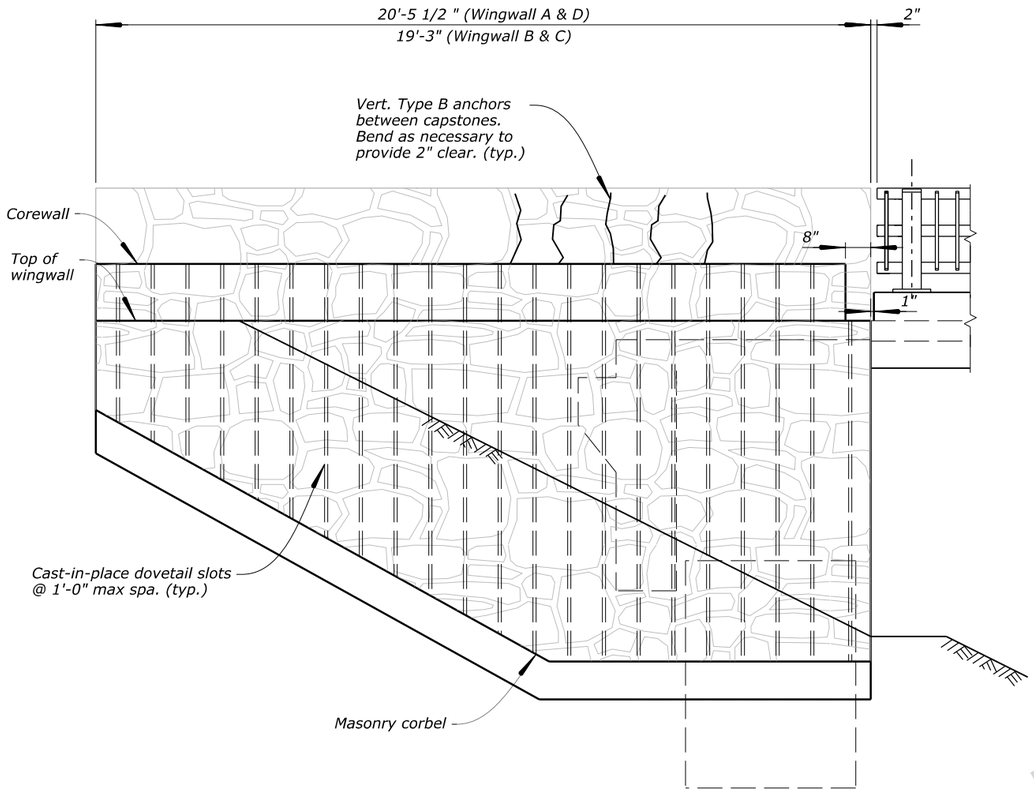

MASONRY ELEVATION

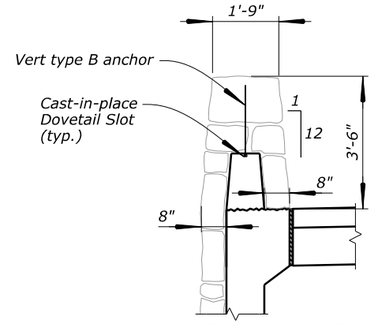

MASONRY SECTION

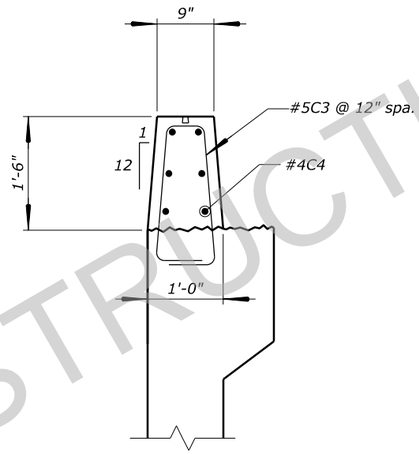

COREWALL SECTION

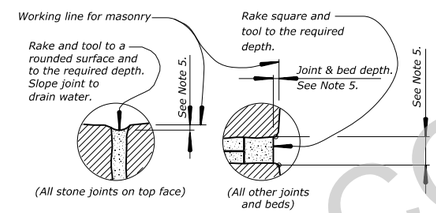

MASONRY MORTAR JOINT AND BED DETAILS

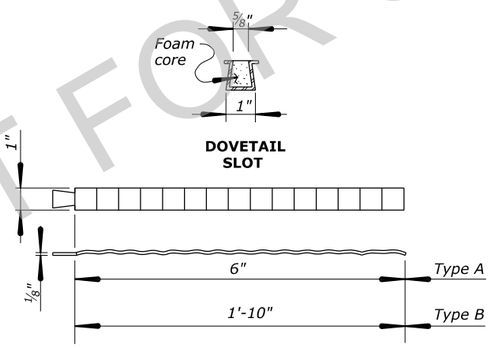

DOVETAIL SLOT & ANCHOR DETAILS

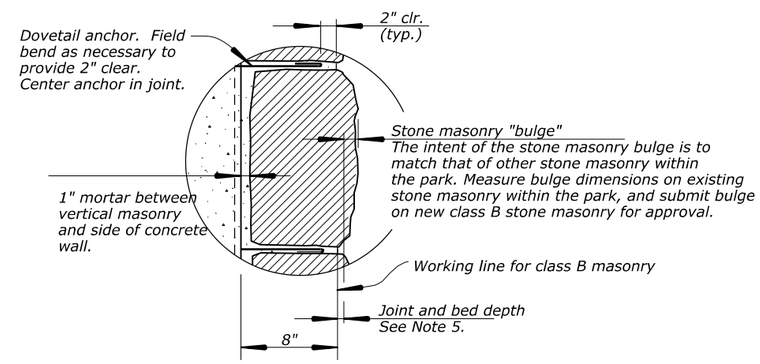

MASONRY BULGE DETAIL

Notes:

1. Replicate the stone pattern of other masonry within the park. Construct test wall according to Section 620.
2. Provide 22 gage hot-dipped galvanized steel dovetail slots, filled with foam and with a throat opening width of 5/8". Conform steel for dovetail slots to ASTM A1008.
3. Provide corrugated 1/8" thick hot-dipped galvanized steel dovetail anchors conforming to ASTM A1008.
4. The locations of the dovetail anchors for stone masonry and CMU joints are as follows: The Type B dovetail anchors are required between each stone on top of the corewall. Type A dovetail anchors are required at the intersection of the vertical dovetail slots and each horizontal mortar joint along the wingwall, curtain wall, and corewall face.
5. Provide mortar joints and bed thicknesses and depths on all masonry that match that of the other stone masonry within the park. Measure and submit for approval.
6. Provide sound rhyolite stone matching the color and consistency of the masonry stone used on the existing Pelican Creek Bridge stone masonry approach walls.

SAMPLE MASONRY PATTERN

PRELIMINARY - NOT FOR CONSTRUCTION

STRUCTURE NO.	STRUCTURE NAME	FEATURES INTERSECTED	LOCATION	U.S. DEPARTMENT OF TRANSPORTATION FEDERAL HIGHWAY ADMINISTRATION OFFICE OF FEDERAL LANDS HIGHWAY
1570-026	MADISON RIVER BRIDGE	MADISON RIVER	YELLOWSTONE NATIONAL PARK	

NO.	DATE	BY	REVISIONS	DESIGNED BY	DRAWN BY	CHECKED BY	PROJECT TEAM LEAD	SCALE	BRIDGE PLAN SHEET	DATE	RG / BRP NO.
				K.COX	K.COX	X.XXXX	B.OLTMANN	NO SCALE	23 of 26	APRIL 2026	RG3318-W

STONE MASONRY DETAILS

c:\pw_work_wfl\d0626775\S.1 - S.26 WY NP YELL 15(2) PLAN SHEETS.DGN [STONE MASONRY DETAILS]
22 April 2026 7:45 AM

PROJECT	SHEET NUMBER
WY NP YELL 15(2)	S.24

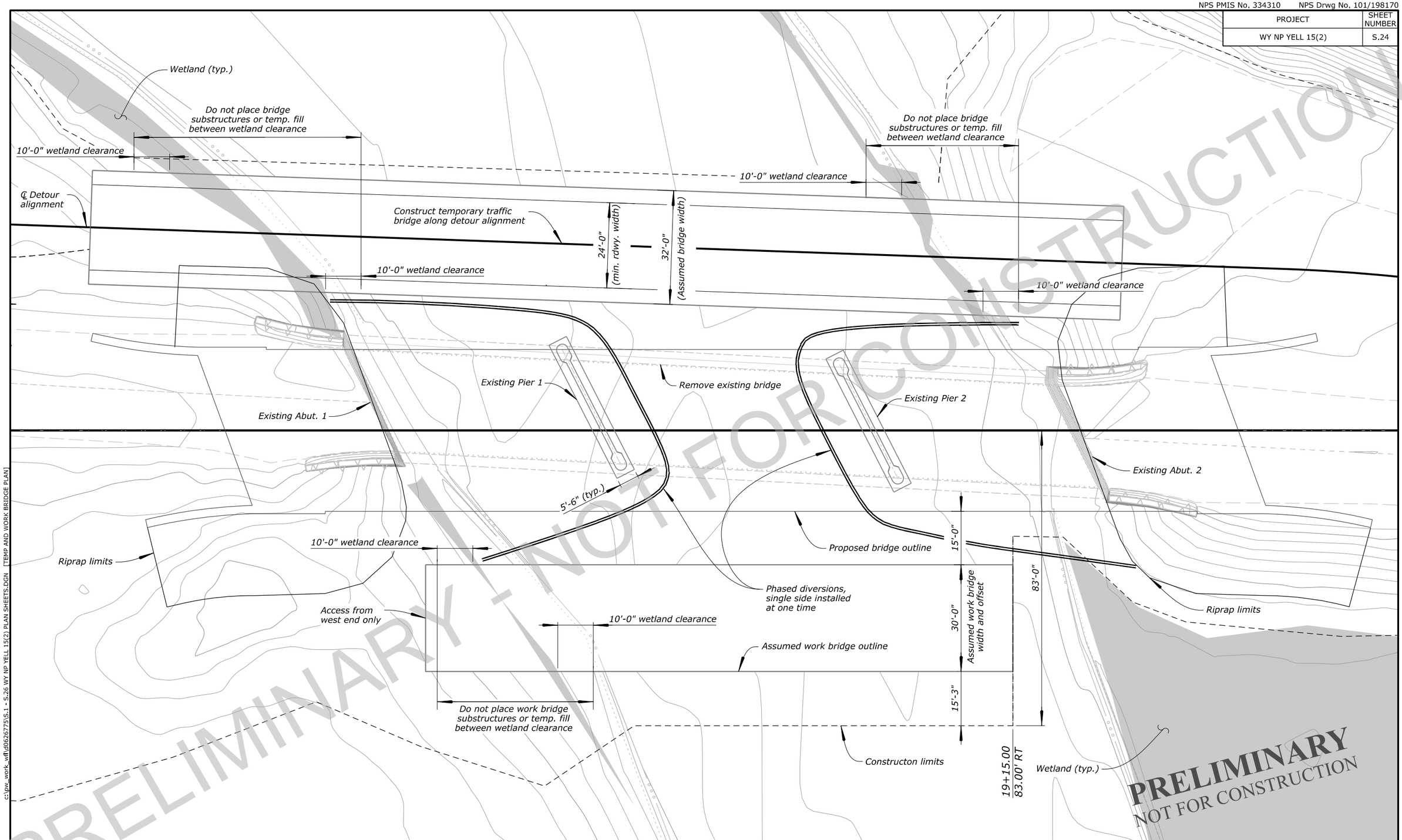

PRELIMINARY - NOT FOR CONSTRUCTION

STRUCTURE NO.	STRUCTURE NAME	FEATURES INTERSECTED	LOCATION	U.S. DEPARTMENT OF TRANSPORTATION FEDERAL HIGHWAY ADMINISTRATION OFFICE OF FEDERAL LANDS HIGHWAY
1570-026	MADISON RIVER BRIDGE	MADISON RIVER	YELLOWSTONE NATIONAL PARK	

NO.	DATE	BY	REVISIONS	DESIGNED BY	DRAWN BY	CHECKED BY	PROJECT TEAM LEAD	SCALE	BRIDGE PLAN SHEET	DATE	RG / BRP NO.
				K.COX	K.COX	X.XXXX	B.OLTMANN	NO SCALE	24 of 26	MAY 2026	RG3318-X

TEMP AND WORK BRIDGE PLAN

c:\pw_work_wfl\d0626775\S.1 - S.26 WY NP YELL 15(2) PLAN SHEETS.DGN [TEMP AND WORK BRIDGE PLAN]
14 May 2026 1:13 PM

PROJECT	SHEET NUMBER
WY NP YELL 15(2)	S.25

REINFORCING STEEL SCHEDULE

DIMENSION TABLE

Abutment 1 & 2

BAR MK	SIZE	TYPE	PIN SZ	LOCATION	QTY	LENGTH	WEIGHT	A	B	C	D	E	F	G	H	I	J	K	O	R	V or N

Pier

BAR MK	SIZE	TYPE	PIN SZ	LOCATION	QTY	LENGTH	WEIGHT	A	B	C	D	E	F	G	H	I	J	K	O	R	V or N

Endwall 1 & 2

BAR MK	SIZE	TYPE	PIN SZ	LOCATION	QTY	LENGTH	WEIGHT	A	B	C	D	E	F	G	H	I	J	K	O	R	V or N

Wingwall A & D

BAR MK	SIZE	TYPE	PIN SZ	LOCATION	QTY	LENGTH	WEIGHT	A	B	C	D	E	F	G	H	I	J	K	O	R	V or N

Wingwall C & B

BAR MK	SIZE	TYPE	PIN SZ	LOCATION	QTY	LENGTH	WEIGHT	A	B	C	D	E	F	G	H	I	J	K	O	R	V or N

PRELIMINARY - NOT FOR CONSTRUCTION

PRELIMINARY
NOT FOR CONSTRUCTION

c:\pw_work_wf\d0626775\S.1 - S.26 WY NP YELL 15(2) PLAN SHEETS.DGN [REBAR LIST (1 OF 2)]
22 April 2026 7:52 AM

STRUCTURE NO.	STRUCTURE NAME	FEATURES INTERSECTED	LOCATION	U.S. DEPARTMENT OF TRANSPORTATION FEDERAL HIGHWAY ADMINISTRATION OFFICE OF FEDERAL LANDS HIGHWAY
1570-026	MADISON RIVER BRIDGE	MADISON RIVER	YELLOWSTONE NATIONAL PARK	

NO.	DATE	BY	REVISIONS	DESIGNED BY	DRAWN BY	CHECKED BY	PROJECT TEAM LEAD	SCALE	BRIDGE PLAN SHEET	DATE	RG / BRP NO.
				K.COX	K.COX	X.XXXX	B.OLTMANN	NO SCALE	25 of 26	APRIL 2026	RG3318-Y

REBAR LIST (1 OF 2)

PROJECT	SHEET NUMBER
WY NP YELL 15(2)	S.26

REINFORCING STEEL SCHEDULE — DIMENSION TABLE

Slab

BAR MK	SIZE	TYPE	PIN SZ	LOCATION	QTY	LENGTH	WEIGHT	A	B	C	D	E	F	G	H	I	J	K	O	R	V or N

Sidewalks

BAR MK	SIZE	TYPE	PIN SZ	LOCATION	QTY	LENGTH	WEIGHT	A	B	C	D	E	F	G	H	I	J	K	O	R	V or N

Curbs

BAR MK	SIZE	TYPE	PIN SZ	LOCATION	QTY	LENGTH	WEIGHT	A	B	C	D	E	F	G	H	I	J	K	O	R	V or N

Approach Slabs

BAR MK	SIZE	TYPE	PIN SZ	LOCATION	QTY	LENGTH	WEIGHT	A	B	C	D	E	F	G	H	I	J	K	O	R	V or N

PRELIMINARY - NOT FOR CONSTRUCTION

PRELIMINARY
NOT FOR CONSTRUCTION

c:\pw_work_wdf\d0626775\S.1 - S.26 WY NP YELL 15(2) PLAN SHEETS.DGN [REBAR LIST (2 OF 2)]
22 April 2026 7:52 AM

STRUCTURE NO.	STRUCTURE NAME	FEATURES INTERSECTED	LOCATION	U.S. DEPARTMENT OF TRANSPORTATION FEDERAL HIGHWAY ADMINISTRATION OFFICE OF FEDERAL LANDS HIGHWAY
1570-026	MADISON RIVER BRIDGE	MADISON RIVER	YELLOWSTONE NATIONAL PARK	

NO.	DATE	BY	REVISIONS	DESIGNED BY	DRAWN BY	CHECKED BY	PROJECT TEAM LEAD	SCALE	BRIDGE PLAN SHEET	DATE	RG / BRP NO.
				K.COX	K.COX	X.XXXX	B.OLTMANN	NO SCALE	26 of 26	APRIL 2026	RG3318-Z

REBAR LIST (2 OF 2)