Naval Facilities Engineering Systems Command Mid-Atlantic
Norfolk, Virginia

Basis of Design Report
Phase III – Groundwater Treatment System

Site 00001 – Former Drum Marshalling Area, OU2
Groundwater

Naval Weapons Industrial Reserve Plant
Bethpage, New York

Issued for Bid - February 2026

Distribution Statement A. Approved for public release: distribution is unlimited.

90% SUBMISSION

PHASE III TREATMENT PLANT AND DISCHARGE PIPING

FEBRUARY 2026

SITE 00001 - FORMER DRUM MARSHALLING AREA, OU 2 GROUNDWATER

NAVAL WEAPONS INDUSTRIAL RESERVE PLANT
BETHPAGE, NEW YORK
COMPREHENSIVE LONG TERM
ENVIRONMENTAL ACTION NAVY (CLEAN) CONTRACT

CONTRACT NUMBER

CONTRACT TASK ORDER WE24

Submitted to:
Department of the Navy
Naval Facilities Engineering Command Mid-Atlantic
9324 Maryland Avenue
Norfolk, VA 23511-3085

Submitted by:
Tetra Tech
4433 Corporation Lane, Suite 300
Virginia Beach, VA 23462

WORK AREA

0 400 800
SCALE IN FEET

VICINITY MAP

0 2000
SCALE IN FEET

THIS DRAWING PRODUCED ON AUTOCAD
DO NOT REVISE MANUALLY

"THIS DOCUMENT IS THE PROPERTY OF NAVAL FACILITIES ENGINEERING COMMAND, PREPARED BY TETRA TECH ENGINEERING CORPORATION PC, AND IS PROVIDED UPON THE CONDITION THAT IT WILL NOT BE REPRODUCED, COPIED, OR ISSUED TO A THIRD PARTY, AND WILL BE USED SOLELY FOR THE ORIGINAL INTENDED PURPOSE AND SOLELY FOR THE EXECUTION OR REVIEW OF THE ENGINEERING CONSTRUCTION OF THE PROJECT".

IT IS A VIOLATION OF THE NEW YORK STATE EDUCATION LAW, ARTICLE 145, FOR ANY PERSON, UNLESS UNDER THE DIRECTION OF A NEW YORK STATE LICENSED PROFESSIONAL ENGINEER, TO ALTER AN ITEM ON THIS DOCUMENT IN ANY WAY.

ISSUED FOR BID - FEB. 2026

SYM	DESCRIPTION	DATE	APPR

NAVFAC

STATE OF NEW YORK
4/24/26
LICENSED PROFESSIONAL ENGINEER

TETRA TECH
www.tetratech.com
4433 CORPORATION LANE, SUITE 300
VIRGINIA BEACH, VA 23462
PHONE: (757) 461-3788 FAX: (757) 461-4148
A/E INFO

APPROVED
FOR COMMANDER NAVFAC

NOTES
AS PER DOCUMENT FROM NICOLE COMANO, NAVFAC. MIDLANT PLL/EV3

SATISFACTORY TO | DATE 3/24/26
DES EJP | DRW JEC | CHK --
PM/CM -
BRANCH MANAGER --
CHIEF ENG/ARCH -
FIRE PROTECTION -

DEPARTMENT OF THE NAVY
NAVAL FACILITIES ENGINEERING SYSTEMS COMMAND
NAVAL FACILITIES ENGINEERING SYSTEMS COMMAND - MID - ATLANTIC
RWD3
NAVAL WEAPONS INDUSTRIAL RESERVE PLANT BETHPAGE, NEW YORK
NAVAL INDUSTRIAL RESERVE ORDNANCE PLANT
PHASE III - TREATMENT PLANT
COVER SHEET

SCALE: AS NOTED
EPROJECT NO.: -
CONSTR. CONTR. NO.
NAVFAC DRAWING NO.
SHEET # OF -
G-001

DRAWFORM REVISION: 25 AUG 2020

DRAWING INDEX

No.	Sheet #	Title
1	G-001	COVER SHEET
2	G-002	DRAWING INIDEX
3	C-001	CIVIL LEGEND
4	V101	EXISTING CONDITIONS
5	CG101	GRADING PLAN
6	CS101	SITE PLAN
7	CU101	BUIDING SITE UTILITY PLAN
8	CU102	BUIDING SITE UTILITY PLAN INSET
9	C-501	CIVIL DETAILS
10	C-502	CIVIL DETAILS
11	CU201	LAYOUT PLAN RW9 SITE
12	CU209	LAYOUT PLAN RW10 SITE
13	A-001	ARCHITECTURAL ABBREVIATIONS AND GENERAL NOTES
14	A-002	ARCHITECTURAL STANDARDS AND CODE REVIEW
15	A-003	FIRST FLOOR LIFE SAFETY PLAN
16	A-004	MEZZANINE LIFE SAFETY PLAN
17	A-101	ARCHITECTURAL FIRST FLOOR PLAN
18	A-102	SECOND FLOOR MEZZANINE PLAN
19	A-103	ARCHITECTURAL REFLECTED CEILING PLAN
20	A-104	ARCHITECTURAL ROOF PLAN
21	A-110	ARCHITECTURAL CODE ANALYSIS AND LIFE SAFETY PLAN
22	A-111	ARCHITECTURAL FIRST FLOOR , REFLECTED CEILING, AND ROOF PLAN
23	A-201	EXTERIOR ELEVATIONS
24	A-202	EXTERIOR ELEVATIONS
25	A-210	ARCHITECTURAL EXTERIOR ELEVATIONS
26	A-301	ARCHITECTURAL BUILDING SECTIONS
27	A-302	ARCHITECTURAL WALL SECTIONS
28	A-310	ARCHITECTURAL BUILDING SECTIONS
29	A-401	ENLARGED PLANS AND INTERIOR ELEVATIONS
30	A-402	STAIR DETAILS
31	A-410	ENLARGED PLANS
32	A-411	INTERIOR ELEVATIONS
33	A-501	ARCHITECTURAL PARTITION TYPES, AND DOOR DETAILS
34	A-502	TRANS. PANEL AND LOUVER DETAILS
35	A-503	ARCHITECTURAL DETAILS
36	A-510	INTERIOR DETAILS
37	A-601	DOOR AND WINDOW SCHEDULES WITH FRAME TYPES AND ELEVATIONS
38	A-610	DOOR SCHEDULE AND DETAILS
39	A-901	FINISH PLAN & SCHEDULE
40	A-910	FINISH SCHEDULE
41	S-001	STRUCTURAL GENERAL NOTES I
42	S-002	STRUCTURAL GENERAL NOTES II
43	S-003	STRUCTURAL GENERAL NOTES III
44	S-101	GWTP STRUCTURAL FOUNDATION PLAN
45	S-102	GWTP STRUCTURAL SLAB PLAN
46	S-103	GWTP STRUCTURAL MEZZANINE PLAN
47	S-104	GWTP STRUCTURAL ROOF PLAN
48	S-105	OFFICE STRUCTURAL FOUNDATION PLAN
49	S-106	OFFICE STRUCTURALOFFICE SLAB PLAN
50	S-107	OFFICE STRUCTURALOFFICE ROOF PLAN
51	S-201	GWTP STRUCTURAL BUILDING ELEVATIONS
52	S-202	GWTP STRUCTURAL BUILDING ELEVATIONS
53	S-203	GWTP INTERIOR ELEVATIONS
54	S-204	GWTP EXTERIOR PIPE SUPPORT ELEVATIONS
55	S-205	GWTP STRUCTURAL BUILDING ELEVATIONS
56	S-206	OFFICE STRUCTURAL BUILDING ELEVATIONS
57	S-301	GWTP STRUCTURAL FOUNDATION SECTIONS
58	S-302	GWTP STRUCTURAL FOUNDATION SECTIONS
59	S-303	GWTP STRUCTURAL FOUNDATION SECTIONS
60	S-304	GWTP STRUCTURAL FOUNDATION SECTIONS
61	S-401	GWTP STRUCTURAL FRAMING SECTIONS
62	S-402	GWTP STRUCTURAL FRAMING SECTIONS
63	S-403	INTERIOR PIPE SUPPORT FRAMING PLANS
64	S-404	INTERIOR PIPE SUPPORT FRAMING ELEVATIONS
65	S-405	INTERIOR PIPE SUPPORT FRAMING SECTIONS
66	S-501	STRUCTURAL TYPICAL DETAILS
67	S-502	STRUCTURAL TYPICAL DETAILS
68	S-503	STRUCTURAL TYPICAL DETAILS
69	S-504	STRUCTURAL TYPICAL DETAILS
70	MH001	MECHANICAL ABBREVIATIONS, LEGENDS, AND NOTES
71	MH002	MECHANICAL GENERAL NOTES
72	MH101	MECHANICAL FLOOR PLAN
73	MH102	MECHANICAL FLOOR PLAN
74	MH103	MECHANICAL MEZZANINE LEVEL PLAN
75	MH501	MECHANICAL DETAILS
76	MH601	MECHANICAL SCHEDULES
77	MH901	MECHNICAL CONTROLS
78	MH902	MECHNICAL CONTROLS
79	MH903	MECHNICAL CONTROLS
80	P-001	PLUMBING ABBREVIATIONS, LEGEND, & NOTES
81	P-101	PRESSURE PIPING PLANS
82	P-102	WASTE & VENT PLAN
83	P-103	FLOOR PENETRATION PLANS
84	P-401	ENLARGED PLANS
85	P-501	DETAILS
86	P-502	DETAILS
87	P-601	PLUMBING SCHEDULES
88	P-901	ISOMETRICS
89	P-902	ISOMETRICS
90	P-903	ISOMETRICS
91	P-904	ISOMETRICS
92	FA001	FIRE ALARM GENERAL NOTES AND LEGEND
93	FA101	FIRE ALARM PLANS - FIRST FLOOR
94	FA102	FIRE ALARM PLANS - MEZZANINE LEVEL
95	FA401	FIRE ALARM ENLARGED PLANS
96	FA501	FIRE ALARM DETAILS
97	FA601	FIRE ALARM RISER DIAGRAM AND FUNCTIONAL MATRIX
98	FX001	FIRE PROTECTION GENERAL NOTES AND LEGEND
99	FX101	HAZARD CLASSIFICATION PLANS - FIRST FLOOR
100	FX102	HAZARD CLASSIFICATION PLANS - MEZZANINE LEVEL
101	FX103	FIRE SPRINKLER PLANS - FIRST FLOOR
102	FX104	FIRE SPRINKLER PLANS - MEZZANINE LEVEL
103	FX301	FIRE PROTECTION SECTIONS
104	FX302	FIRE PROTECTION SECTIONS
105	FX401	FIRE PROTECTION ENLARGED PLANS
106	FX501	FIRE PROTECTION DETAILS
107	FX502	FIRE PROTECTION DETAILS
108	M-100	TREATMENT BUILDING EQUIPMENT LAYOUT
109	M-101	TREATMENT BUILDING PIPING PLAN
110	M-102	TREATMENT BUILDING PIPING PLAN
111	M-103	EQ TANK AND PUMPS ENLARGED PLAN AND SECTIONS
112	M-104	BWS TANK AND PUMPS ENLARGED PLAN AND SECTIONS
113	M-105	BWS TANK AND PUMPS ENLARGED PLAN AND SECTIONS
114	M-106	MMF TANKS T-210, 220, 230 ENLARGED PLAN AND SECTIONS
115	M-107	LGAC FEED TANK AND PUMPS ENLARGED PLAN AND SECTIONS
116	M-108	LGAC TANKS T-410, 420, 430 ENLARGED PLAN AND SECTIONS
117	M-109	TREATMENT PLANT INFLUENT AND EFFLUENT MANIFOLDS
118	M-110	TREATMENT PLANT INFLUENT MANIFOLDS
119	M-111	CHEMICAL ROOM ENLARGED PLAN & ELEVATION
120	M-112	TREATMENT PLANT NORTH WALL PIPING ELEVATION
121	M-113	TREATMENT PLANT NORTH WALL PIPING ELEVATION
122	M-114	TREATMENT PLANT COMPRESSOR ROOM PIPING PLAN & ELEVATIONS
123	M-115	GWTP PROCESS WATER FLOOR DRAIN SYSTEM
124	M-116	GWTP PROCESS WATER DRAIN ISOMETRIC & DETAIL
125	M-501	VALVE VAULT PLANS AND SECTIONS
126	M-502	MECHANICAL PIPE SUPPORT DETAILS
127	M-503	MECHANICAL PIPE SUPPORT DETAILS
128	M-504	MECHANICAL WALL AND SLAB PENETRATION DETAILS
129	M-505	BACKWASH WASTE TANK AND PARSHALL FLUME
130	GM-001	ENGINEERING MECHANICAL LEGEND SHEET
131	GM-002	ENGINEERING MECHANICAL LEGEND SHEET
132	MI601	PROCESS FLOW DIAGRAM
133	MI602	RECOVERY WELL RW-8 AND RW-9
134	MI603	RECOVERY WELL RW-10A
135	MI604	PLANT INFLUENT TO EQ TANK
136	MI605	EQUALIZATION TANK AND PUMPING SYSTEM
137	MI606	MULTIMEDIA PRESSURE SYSTEM AND CARTRIDGE FILTERS
138	MI607	AIR COMPRESSOR OXYGEN & OZONE SYSTEMS
139	MI608	AOP REACTORS & OZONE DESTRUCTOR
140	MI609	LGAC FEED TANK & PUMPING SYSTEM
141	MI610	LGAC SYSTEM
142	MI611	BACKWASH SUPPLY TANK & PUMPING SYSTEM
143	MI612	OUTFALL BASINS
144	MI613	SODIUM HYPOCHLORITE FEED SYSTEM
145	MI614	CAUSTIC FEED SYSTEM
146	MI615	HYDROGEN PEROXIDE FEED SYSTEM
147	MI616	TREATMENT BUILDING SUMP & PUMPING SYSTEM
148	MI617	TREATMENT BUILDING AIR BLOWER AND CARBON CANNISTER
149	MI618	TREATMENT BUILDING COMPRESSED AIR SYSTEM
150	MI619	TREATMENT BUILDING SAFETY SHOWERS
151	MI620	BUILDING EQUIPMENT AND CONTROL PANEL MONITORING
152	MI621	BACKWASH WASTE TANK
153	MC001	GWTP BUILDING UNDERGROUND PROCESS PIPING PLAN
154	MC002	MECHANICAL VALVE VAULT RW9 & RW10A ORIENTATION
155	E-001	ELECTRICAL SYMBOLS, LEGEND, ABBREVIATIONS AND NOTES
156	E-100	ELECTRICAL SITE
157	E-101	ELECTRICAL FIRST FLOOR LIGHTING PLAN
158	E-102	ELECTRICAL FIRST FLOOR LIGHTING PLANS
159	E-103	ELECTRICAL FIRST FLOOR POWER PLANS
160	E-104	ELECTRICAL MEZZANINE POWER PLAN
161	E-105	GROUNDING PLAN
162	E-106	LIGHTNING PROTECTION PLAN
163	E-107	ELECTRICAL TELECOMMUNICATION AND SECURITY PLAN
164	E-401	PARTIAL SITE PLAN-EXTRACTION WELL RW8
165	E-402	PARTIAL SITE PLAN-EXTRACTION WELL RW9
166	E-403	PARTIAL SITE PLAN-EXTRACTION WELL RW10A
167	E-501	ELECTRICAL DETAILS
168	E-502	ELECTRICAL DETAILS
169	E-503	ELECTRICAL DETAILS
170	E-504	ELECTRICAL DETAILS
171	E-505	ELECTRICAL DETAILS
172	E-506	ELECTRICAL DETAILS
173	E-601	SINGLE LINE DIAGRAM
174	E-602	WELL SITE ELECTRICAL SCHEDULES
175	E-603	ELECTRICAL SCHEDULES
176	E-604	ELECTRICAL SCHEDULES
177	E-605	ELECTRICAL SCHEDULES
178	E-606	ELECTRICAL SCHEDULES
179	EI101	GWTP INSTRUMENT LOCATION PLAN
180	EI102	RW-9 CONDUIT BLOCK DIAGRAM
181	EI103	RW-10A CONDUIT BLOCK DIAGRAM
182	EI104	GWTP CONTROL ROOM PLAN
183	EI105	GWTP OFFICE BUILDING ETHERNET PLAN
184	EI601	SERVER RACKS #1 & #2 LAYOUT & BOM
185	EI610	IOP-1 CONTROL PANEL LAYOUT & BOM
186	EI611	IOP-1 CONTROL SUB-PANEL LAYOUT & BOM
187	EI612	IOP-1 CONTROL TERMINAL DETAILS
188	EI613	IOP-1 CONTROL PANEL 120VAC POWER LADDER
189	EI614	IOP-1 CONTROL PANEL 24VDC POWER LADDER
190	EI615	IOP-1 CONTROL PANEL RACK 1 SLOTS 0 & 1
191	EI616	IOP-1 CONTROL PANEL RACK 1 SLOTS 2 & 3
192	EI617	IOP-1 CONTROL PANEL RACK 1 SLOT 4
193	EI620	IOP-2 CONTROL PANEL LAYOUT & BOM
194	EI621	IOP-2 CONTROL SUB-PANEL LAYOUT & BOM
195	EI622	IOP-2 CONTROL TERMINAL DETAILS
196	EI623	IOP-2 CONTROL PANEL 120VAC POWER LADDER
197	EI624	IOP-2 CONTROL PANEL 24VDC POWER LADDER
198	EI625	IOP-2 CONTROL PANEL RACK 2 SLOTS 0 & 1
199	EI626	IOP-2 CONTROL PANEL RACK 2 SLOTS 2 & 3
200	EI627	IOP-2 CONTROL PANEL RACK 2 SLOTS 4 & 5
201	EI628	IOP-2 CONTROL PANEL RACK 3 SLOTS 0 & 1
202	EI629	IOP-2 CONTROL PANEL RACK 3 SLOT 2
203	EI630	IOP-3 CONTROL PANEL LAYOUT & BOM
204	EI631	IOP-3 CONTROL SUB-PANEL LAYOUT & BOM
205	EI632	IOP-3 CONTROL TERMINAL DETAILS
206	EI633	IOP-3 CONTROL PANEL 120VAC POWER LADDER
207	EI634	IOP-3 CONTROL PANEL 24VDC POWER LADDER
208	EI635	IOP-3 CONTROL PANEL RACK 4 SLOTS 0 & 1
209	EI636	IOP-3 CONTROL PANEL RACK 4 SLOTS 2 & 3
210	EI637	IOP-3 CONTROL PANEL RACK 4 SLOTS 4 & 5
211	EI638	IOP-3 CONTROL PANEL RACK 5 SLOTS 0 & 1
212	EI639	IOP-3 CONTROL PANEL RACK 5 SLOT 2
213	EI640	IOP-4 CONTROL PANEL LAYOUT & BOM
214	EI641	IOP-4 CONTROL SUB-PANEL LAYOUT & BOM
215	EI642	IOP-4 CONTROL TERMINAL DETAILS
216	EI643	IOP-4 CONTROL PANEL 120VAC POWER LADDER
217	EI644	IOP-4 CONTROL PANEL 24VDC POWER LADDER
218	EI645	IOP-4 CONTROL PANEL RACK 6 SLOTS 0 & 1
219	EI646	IOP-4 CONTROL PANEL RACK 6 SLOTS 2 & 3
220	EI647	IOP-4 CONTROL PANEL RACK 6 SLOTS 4 & 5
221	EI648	IOP-4 CONTROL PANEL RACK 6 SLOT 6 & 7
222	EI650	IOP-5 CONTROL PANEL LAYOUT & BOM
223	EI651	IOP-5 CONTROL SUB-PANEL LAYOUT & BOM
224	EI652	IOP-5 CONTROL TERMINAL DETAILS
225	EI653	IOP-5 CONTROL PANEL 120VAC POWER LADDER
226	EI654	IOP-5 CONTROL PANEL 24VDC POWER LADDER
227	EI655	IOP-5 CONTROL PANEL RACK 7 SLOTS 0 & 1
228	EI660	IOP-6 CONTROL PANEL LAYOUT & BOM
229	EI661	IOP-6 CONTROL SUB-PANEL LAYOUT & BOM
230	EI662	IOP-6 CONTROL TERMINAL DETAILS
231	EI663	IOP-6 CONTROL PANEL 120VAC POWER LADDER
232	EI664	IOP-6 CONTROL PANEL 24VDC POWER LADDER
233	EI665	IOP-6 CONTROL PANEL RACK 8 SLOTS 0 & 1
234	EI690	AP-1 CHEMICAL UNLOADING ALARM PANEL
235	TN601	SYSTEM ARCHITECTURE

ISSUED FOR BID - FEB. 2026

THIS DRAWING PRODUCED ON AUTOCAD DO NOT REVISE MANUALLY

"THIS DOCUMENT IS THE PROPERTY OF NAVAL FACILITIES ENGINEERING COMMAND, PREPARED BY TETRA TECH ENGINEERING CORPORATION PC, AND IS PROVIDED UPON THE CONDITION THAT IT WILL NOT BE REPRODUCED, COPIED, OR ISSUED TO A THIRD PARTY, AND WILL BE USED SOLELY FOR THE ORIGINAL INTENDED PURPOSE AND SOLELY FOR THE EXECUTION OR REVIEW OF THE ENGINEERING CONSTRUCTION OF THE PROJECT".

IT IS A VIOLATION OF THE NEW YORK STATE EDUCATION LAW, ARTICLE 145, FOR ANY PERSON, UNLESS UNDER THE DIRECTION OF A NEW YORK STATE LICENSED PROFESSIONAL ENGINEER, TO ALTER AN ITEM ON THIS DOCUMENT IN ANY WAY.

SYM	DESCRIPTION	DATE	APPR

NAVFAC

TETRA TECH
www.tetratech.com
4433 CORPORATION LANE, SUITE 300
VIRGINIA BEACH, VA 23462
PHONE: (757) 461-3788 FAX: (757) 461-4148
A/E INFO

APPROVED
FOR COMMANDER NAVFAC

NOTES
AS PER DOCUMENT FROM NICOLE COWAND, NAVFAC. MIDLANT PLL/EV3

SATISFACTORY TO | DATE 3/24/26
DES EJP | DRW JEC | CHK ---
PM/DM
BRANCH MANAGER
CHIEF ENG/ARCH
FIRE PROTECTION

DEPARTMENT OF THE NAVY
NAVAL FACILITIES ENGINEERING SYSTEMS COMMAND - MID - ATLANTIC
NAVAL FACILITIES ENGINEERING SYSTEMS COMMAND
NAVAL INDUSTRIAL RESERVE ORDNANCE PLANT
NAVAL WEAPONS INDUSTRIAL RESERVE PLANT BETHPAGE, NEW YORK
RW09
PHASE III - TREATMENT PLANT
DRAWING INDEX

SCALE: AS NOTED
EPROJECT NO.:
CONSTR. CONTR. NO.
NAVFAC DRAWING NO.
SHEET # OF
G-002

DRAWFORM REVISION: 25 AUG 2020

LEGEND

EXISTING	LEGEND	PROPOSED
	BERM	
	BUSH	
	CATCH BASIN - TYPE "A"	
	CHAIN LINK FENCE	
	COMMUNICATION	
	CONCRETE PAD	
	DISCHARGE PIPING	
	DRAIN	
	ELECTRIC	
	FIRE DEPARTMENT	
	GAS	
	GAS MAIN VALVE	
	GAS METER	
	GAS SERVICE VAULT	
	GAS VENT	
	GAS VALVE	
	GRASS	
	GRAVEL	
	GROUNDWATER EXTRACTION LINE	
	GUARD RAIL	
	GUYWIRE & ANCHOR	
	HANDICAP RAMP	
	HEDGE	
	HYDRANT	
	IRRIGATION VALVE	
	MAILBOX	
	METAL FENCE	
	MONITORING WELL	
	PARCEL	
	ROOF DRAIN	
	SANITARY SEWER	
	SANITARY SEWER MANHOLE	
	SEWER CLEANOUT	
	SIGN - SINGLE POST	
	SIGN - DOUBLE POST	
	SPRINKLER (UNDERGROUND)	
	STONE	
	TELEPHONE	
	TOWN BOUNDARY	
	TRAFFIC CONTROL CABINET	
	TRAFFIC DETECTOR	
	TRAFFIC LOOP	
	TREE (WITH SIZE)	
	TREELINE	
	UNIDENTIFIED VAULT	
	UNKNOWN	
	UNKNOWN VALVE	
	UTILITY POLE	
	VINYL FENCE	
	WATER METER	
	WATERLINE MANHOLE	
	WATER VALVE	

EXISTING	LEGEND	PROPOSED
	WATERLINE	
	WOODEN FENCE	
	GROUNDWATER EXTRACTION LINE MANHOLE	
	CLEARING AND GRUBBING	
	ASPHALT PAVEMENT	

ISSUED FOR BID - FEB. 2026

THIS DRAWING PRODUCED ON AUTOCAD
DO NOT REVISE MANUALLY

"THIS DOCUMENT IS THE PROPERTY OF NAVAL FACILITIES ENGINEERING COMMAND, PREPARED BY TETRA TECH ENGINEERING CORPORATION PC, AND IS PROVIDED UPON THE CONDITION THAT IT WILL NOT BE REPRODUCED, COPIED, OR ISSUED TO A THIRD PARTY, AND WILL BE USED SOLELY FOR THE ORIGINAL INTENDED PURPOSE AND SOLELY FOR THE EXECUTION OR REVIEW OF THE ENGINEERING CONSTRUCTION OF THE PROJECT.

IT IS A VIOLATION OF THE NEW YORK STATE EDUCATION LAW, ARTICLE 145, FOR ANY PERSON, UNLESS UNDER THE DIRECTION OF A NEW YORK STATE LICENSED PROFESSIONAL ENGINEER, TO ALTER AN ITEM ON THIS DOCUMENT IN ANY WAY.

SYM	DESCRIPTION	DATE	APPR

NAVFAC

TETRA TECH
www.tetratech.com
4433 CORPORATION LANE, SUITE 300
VIRGINIA BEACH, VA 23462
PHONE: (757) 461-3766 FAX: (757) 461-4145
A/E INFO

APPROVED
FOR COMMANDER NAVFAC

ADDITIONAL
AS PER DOCUMENT FROM NICOLE COMMAND, NAVFAC. MIDLANT PLL/EV3

SATISFACTORY TO: DATE 3/24/26

DES EJP DRW JEC CHK --

PM/DM -
BRANCH MANAGER --
CHIEF ENG/ARCH -
FIRE PROTECTION

DEPARTMENT OF THE NAVY
NAVAL FACILITIES ENGINEERING SYSTEMS COMMAND
NAVAL FACILITIES ENGINEERING SYSTEMS COMMAND - MID - ATLANTIC
NAVAL INDUSTRIAL RESERVE ORDNANCE PLANT
RWO9
NAVAL WEAPONS INDUSTRIAL RESERVE PLANT BETHPAGE, NEW YORK
PHASE III - TREATMENT PLANT
CIVIL LEGEND

SCALE: 1" = 100'
EPROJECT NO.: -
CONSTR. CONTR. NO.
NAVFAC DRAWING NO. ##
SHEET ## OF -
C-001

DRAWFORM REVISION: 23 AUG 2020

NOTIFICATION: THIS PAGE CONTAINS SENSITIVE BUT UNCLASSIFIED INFORMATION WHICH IS PROTECTED BY THE FREEDOM OF INFORMATION ACT

EXEMPTION 3. (5 USC 552(b)(3))

Information exempted by other statutes

10 USC Section 130(e) Treatment of Certain Critical Infrastructure Security Information

Pages 5-9

TO REQUEST A COPY OF THE DOCUMENT PLEASE CONTACT

Department of the Navy
Freedom of Information Act Office

http://www.secnav.navy.mil/foia/Pages/default.aspx

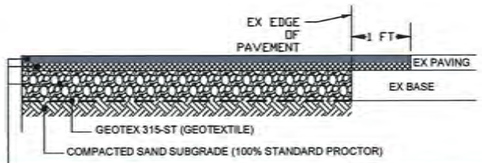

ASPHALT PAVEMENT SECTION:
2" NYS DOT 402.06.63QR TOP COURSE
3" NYS DOT 402.25.69QR BASE COURSE
12" 100% CRUSHED AGGREGATE BASE (EQUAL LIFTS)

NOTE:
REFER TO GEOTECHNICAL REPORT. CBR SHALL BE RUN ON SOILS FOLLOWING SITE PREPARATION TO VERIFY THE PAVEMENT SECTION NOTED IS SUFFICIENT.

D1 / CS101 DETAIL: SITE ASPHALT PAVEMENT SECTION
SCALE: NTS

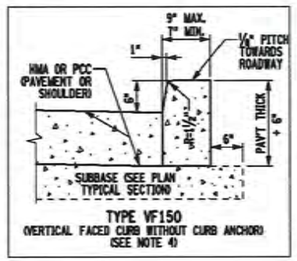

NOTES:

1. USE CURB AND CURB AND GUTTER MEETING THE MATERIAL AND CONSTRUCTION REQUIREMENTS OF SECTION 609 OF THE STANDARD SPECIFICATIONS.
2. CURB ANCHOR (NEW CONSTRUCTION). THIS DETAIL SHOWS PLACEMENT OF CURB ANCHORS. PUSH-IN TYPE ANCHORS MAY BE USED (SHOWN ON THE STANDARD SHEET FOR LONGITUDINAL TIES).
3. CURB TYPES M150A, VF150A AND M100A REQUIRE CURB ANCHOR. CURB AND GUTTER TYPES VF150G AND M100G REQUIRE ANCHORS WHEN PLACED ADJACENT TO CONCRETE PAVEMENT OR SHOULDER.
4. WHEN VERTICAL FACED CURB LESS THAN 9" WIDE IS USED WITH CURB BOXES CU1, CU2, AND CU3 AND CONCRETE SIDEWALK IS PLACED ADJACENT TO THIS CURB, SEE STANDARD SHEET MISCELLANEOUS CURB DETAILS FOR CURB BOX JOINTS.

C1 / CS101 DETAIL: CURB
SCALE: NTS

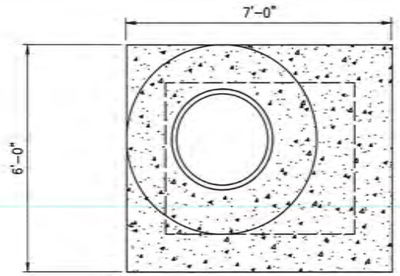

D3 / CU101 TYPICAL MANHOLE
SCALE: 1/2" = 1'-0"

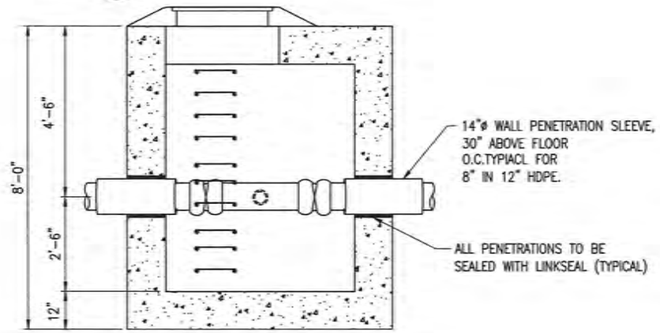

C3 / CU101 TYPICAL MANHOLE – PLAN
SCALE: 1/2" = 1'-0"

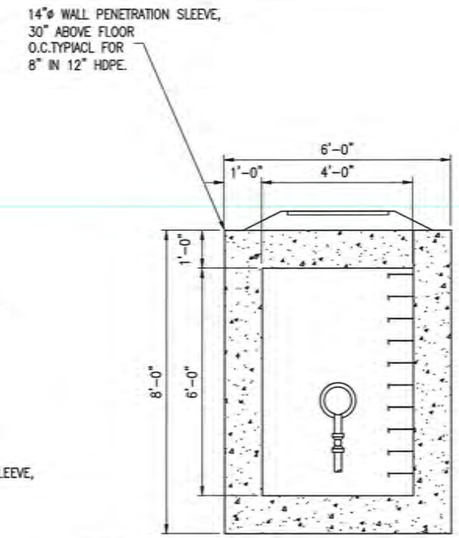

C5 / CU101 MANHOLE–6 – SECTION
SCALE: 1/2" = 1'-0"

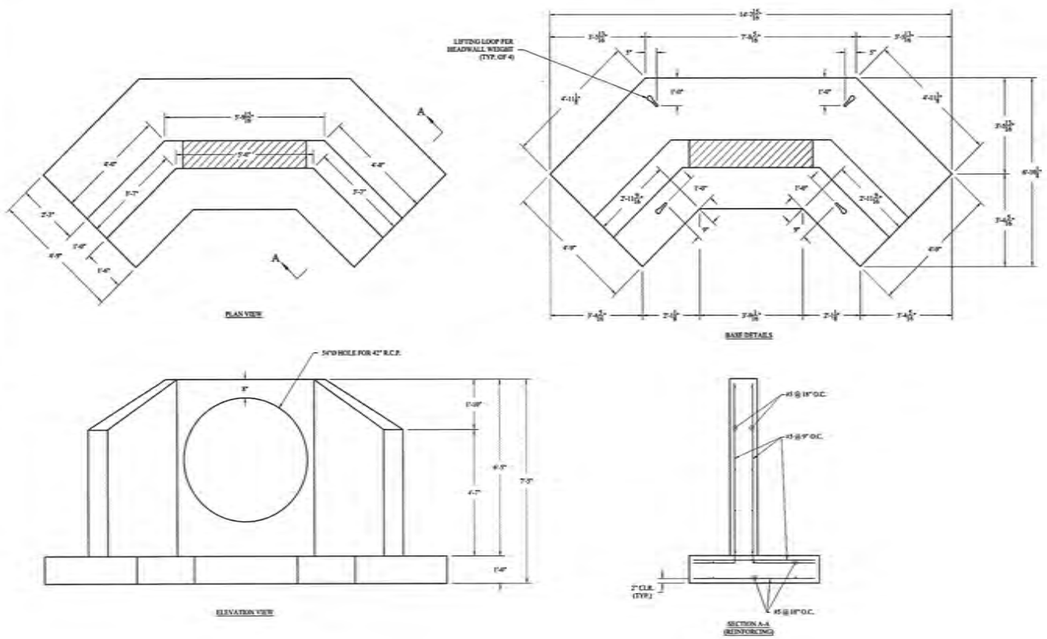

A1 / CU100 DETAIL: HEADWALL
SCALE: NTS

NOTE:
ALL VALVE VAULTS SHALL HAVE GRAVEL BOTTOMS & GW–PVC PIPES WILL BE HEAT TRACED AND INSULATED. AND SHALL HAVE AIR INTAKE AND EXHAUST PIPING AS SHOWN ON MH. DRAWING DETAILS

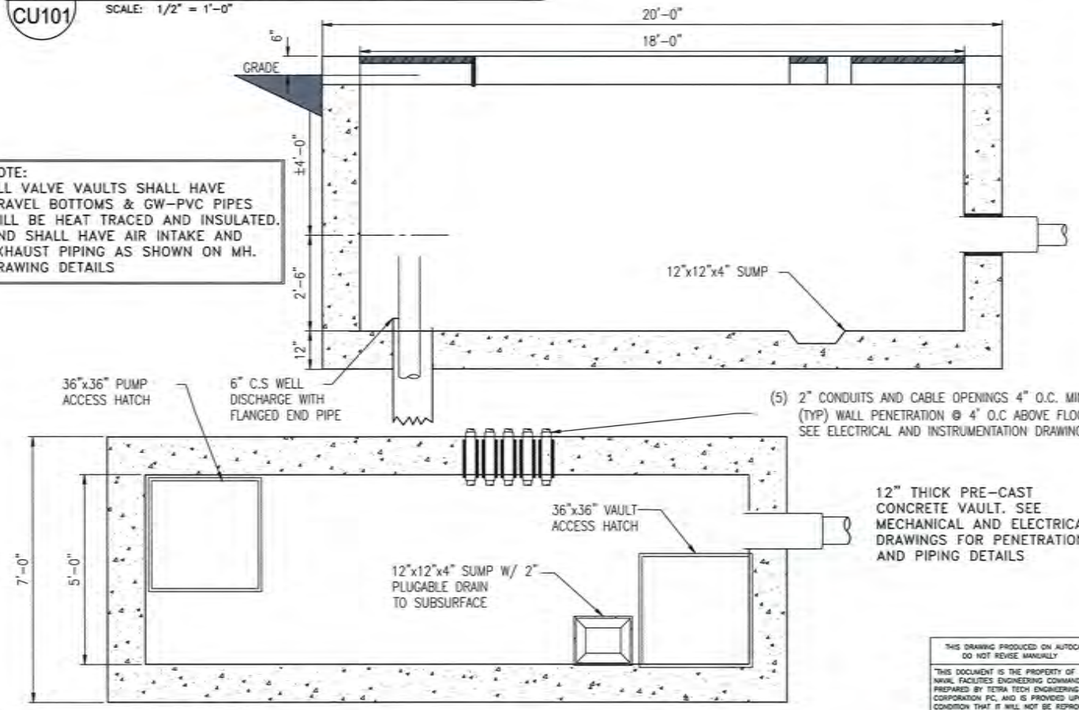

A3 / CU101 TYPICAL VAULT – PLAN
SCALE: NTS

THIS DRAWING PRODUCED ON AUTOCAD DO NOT REVISE MANUALLY

"THIS DOCUMENT IS THE PROPERTY OF NAVAL FACILITIES ENGINEERING COMMAND, PREPARED BY TETRA TECH ENGINEERING CORPORATION PC, AND IS PROVIDED UPON THE CONDITION THAT IT WILL NOT BE REPRODUCED, COPIED, OR ISSUED TO A THIRD PARTY, AND WILL BE USED SOLELY FOR THE ORIGINAL INTENDED PURPOSE AND SOLELY FOR THE EXECUTION OR REVIEW OF THE ENGINEERING CONSTRUCTION OF THE PROJECT".

IT IS A VIOLATION OF THE NEW YORK STATE EDUCATION LAW, ARTICLE 145, FOR ANY PERSON, UNLESS UNDER THE DIRECTION OF A NEW YORK STATE LICENSED PROFESSIONAL ENGINEER, TO ALTER AN ITEM ON THIS DOCUMENT IN ANY WAY.

ISSUED FOR BID - FEB. 2026

SYM	DESCRIPTION	DATE	APPR

NAVFAC

TETRA TECH
www.tetratech.com
4430 CORPORATION LANE, SUITE 300
VIRGINIA BEACH, VA 23462
PHONE: (757) 461-3768 FAX: (757) 461-4148
A/E INFO

APPROVED
FOR COMMANDER NAVFAC

NOTES
AS PER DOCUMENT FROM NICOLE COMAND, NAVFAC. MIDLANT PLL/EV3
SATISFACTORY TO DATE 3/24/26

DES EJP DRW JEC CHK --
PM/DM
BRANCH MANAGER
CHIEF ENG/ARCH
FIRE PROTECTION

DEPARTMENT OF THE NAVY
NAVAL FACILITIES ENGINEERING SYSTEMS COMMAND
NAVAL FACILITIES ENGINEERING SYSTEMS COMMAND - MID - ATLANTIC
NAVAL INDUSTRIAL RESERVE ORDNANCE PLANT
NAVAL WEAPONS INDUSTRIAL RESERVE PLANT BETHPAGE, NEW YORK
PHASE III - TREATMENT PLANT
DETAILS

SCALE: AS NOTED
EPROJECT NO.:
CONSTR. CONTR. NO.
NAVFAC DRAWING NO. ##
SHEET ## OF
C-501

DRAWTORN REVISION: 25 AUG 2020

UNCLASSIFIED

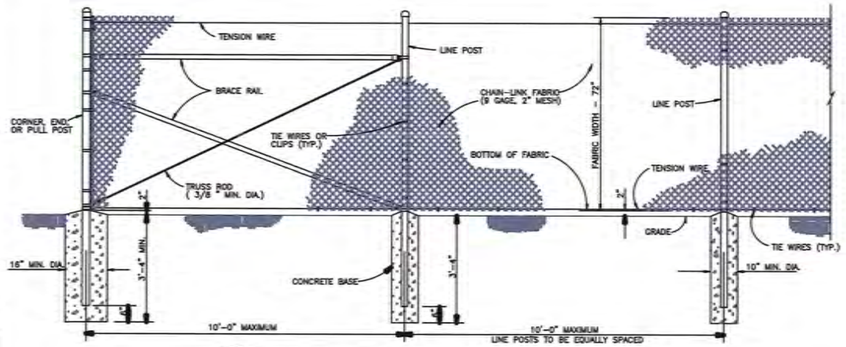

D1 CS101 DETAIL: TYPICAL 6' CHAIN-LINK FENCE
NOT TO SCALE

STEEL POST SCHEDULE	
USE AND SECTION	MINIMUM OUTSIDE DIMENSIONS (NOMINAL)
CORNER, END, & PULL POSTS: TUBULAR – ROUND	2.875" O.D.
LINE POSTS: TUBULAR – ROUND	2.375" O.D.
TOP & BRACE RAILS: TUBULAR – ROUND	1.66" O.D.
GATE POST (4' LEAF): TUBULAR – ROUND	2.875" OD
GATE POST (6' OR 8' LEAF): TUBULAR – ROUND	4.0" OD

NOTES:
1. FENCE DETAILS ARE SHOWN TO CLARIFY REQUIREMENTS AND ARE NOT INTENDED TO LIMIT OTHER TYPES OF FENCE SECTIONS AND METHODS OF INSTALLATION.
2. SWING GATES SHALL BE CONSTRUCTED WITH DROP RODS, PADLOCKS, LATCH ASSEMBLY AND GATE KEEPERS EXCEPT AS NOTED.
3. ALL GATE FRAMES SHALL BE A MINIMUM 1.90" NOMINAL (ROUND). GATE FRAMES SHALL BE OF WELDED CONSTRUCTION OR SHALL BE ASSEMBLED USING HEAVY FITTINGS. AT CONTRACTOR'S OPTION A WELDED HORIZONTAL BRACE MAY BE USED IN LIEU OF TRUSS RODS TO BRACE ALL WELDED GATE FRAMES. THE CONTRACTOR SHALL BE RESPONSIBLE FOR THE PROPER RIGID CONSTRUCTION OF ALL GATES SUPPLIED.
4. WIRE TIES, RAILS, POSTS, AND BRACES SHALL BE CONSTRUCTED ON THE SECURE SIDE OF THE FENCE ALIGNMENT. CHAIN-LINK FABRIC SHALL BE PLACED ON THE OPPOSITE SIDE OF THE SECURE AREA.

NOTES:
1. 18-INCH SQUARE SIGN MADE OF 0.080 INCH ENGINEERING GRADE REFLECTIVE ALUMINUM

D5 CS101 DETAIL: NO TRESSPASSING SIGN
NOT TO SCALE

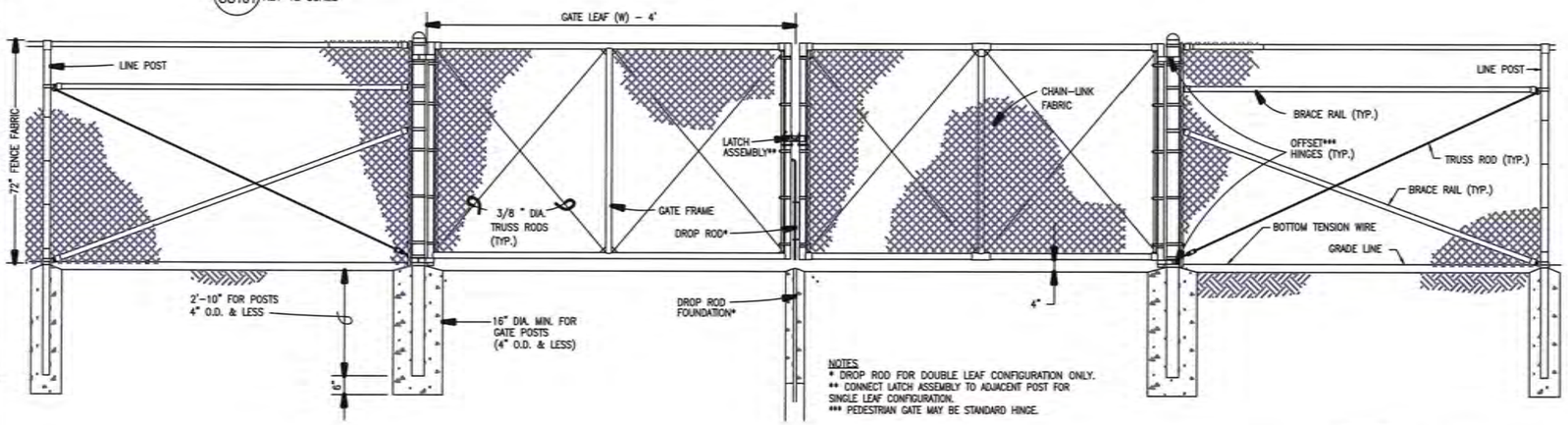

NOTES:
* DROP ROD FOR DOUBLE LEAF CONFIGURATION ONLY.
** CONNECT LATCH ASSEMBLY TO ADJACENT POST FOR SINGLE LEAF CONFIGURATION.
*** PEDESTRIAN GATE MAY BE STANDARD HINGE.

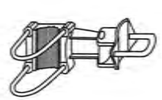

OFFSET HINGE

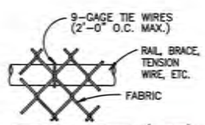

RAIL ATTACHMENT (TYP)

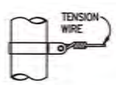

TENSION BAND DETAIL

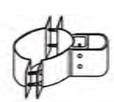

STANDARD HINGE

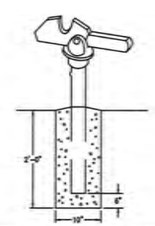

1. TO HOLD GATE OPEN (VEHICLE GATE ONLY)
2. INSTALL ON EDGE OF DRIVE OR FENCELINE TO AVOID DAMAGE TO VEHICLES.

GATE KEEPER
NOT TO SCALE

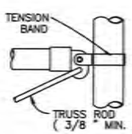

BRACE RAIL CLAMP

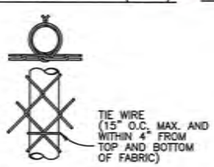

LINE POST ATTACHMENT

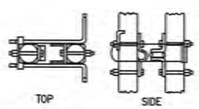

LATCH ASSEMBLY W/ LOCK
NOT TO SCALE

A1 CS101 DETAIL: TYPICAL 6' CHAIN-LINK FENCE GATE AND HARDWARE
SCALE: N.T.S.

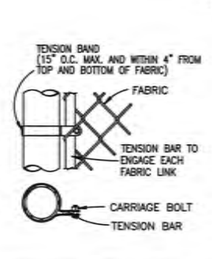

END OR GATE POST DETAIL

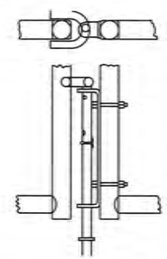

DROP ROD ASSEMBLY
NOT TO SCALE

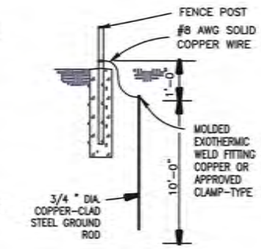

GROUNDING DETAIL
NOT TO SCALE

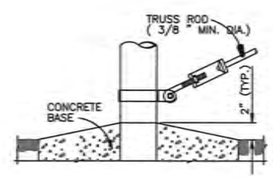

TRUSS ROD AND BAND

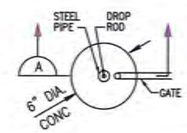

PLAN

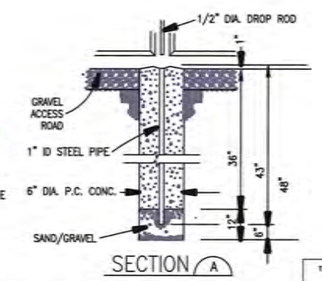

SECTION A

DROP ROD FOUNDATION
NOT TO SCALE

THIS DRAWING PRODUCED ON AUTOCAD DO NOT REVISE MANUALLY

"THIS DOCUMENT IS THE PROPERTY OF NAVAL FACILITIES ENGINEERING COMMAND, PREPARED BY TETRA TECH ENGINEERING CORPORATION PC, AND IS PROVIDED UPON THE CONDITION THAT IT WILL NOT BE REPRODUCED, COPIED, OR ISSUED TO A THIRD PARTY, AND WILL BE USED SOLELY FOR THE ORIGINAL INTENDED PURPOSE AND SOLELY FOR THE EXECUTION OR REVIEW OF THE ENGINEERING CONSTRUCTION OF THE PROJECT".

IT IS A VIOLATION OF THE NEW YORK STATE EDUCATION LAW, ARTICLE 145, FOR ANY PERSON, UNLESS UNDER THE DIRECTION OF A NEW YORK STATE LICENSED PROFESSIONAL ENGINEER, TO ALTER AN ITEM ON THIS DOCUMENT IN ANY WAY.

ISSUED FOR BID - FEB. 2026

REVD	DESCRIPTION	DATE	APPR

NAVFAC

TETRA TECH
www.tetratech.com
4433 CORPORATION LANE, SUITE 300
VIRGINIA BEACH, VA 23462
PHONE: (757) 461-5788 FAX: (757) 461-4148
A/E INFO

APPROVED
FOR COMMANDER NAVFAC

NOTES:
AS PER DOCUMENT FROM NICOLE COWAND, NAVFAC. MIDLANT PLL/EV3

SATISFACTORY TO DATE 3/24/26
DES EJP DRW JEC CHK ---
PM/DM
BRANCH MANAGER
CHIEF ENG/ARCH
FIRE PROTECTION

DEPARTMENT OF THE NAVY
NAVAL FACILITIES ENGINEERING SYSTEMS COMMAND
NAVAL FACILITIES ENGINEERING SYSTEMS COMMAND - MID - ATLANTIC
NAVAL INDUSTRIAL RESERVE ORDNANCE PLANT
NAVAL WEAPONS INDUSTRIAL RESERVE PLANT BETHPAGE, NEW YORK
PHASE III - TREATMENT PLANT
DETAILS

SCALE: AS NOTED
EPROJECT NO.: --
CONSTR. CONTR. NO.:
NAVFAC DRAWING NO. ##
SHEET ## OF -
C-502

DRAWFORM REVISION: 25 AUG 2020

NOTIFICATION: THIS PAGE CONTAINS SENSITIVE BUT UNCLASSIFIED INFORMATION WHICH IS PROTECTED BY THE FREEDOM OF INFORMATION ACT

EXEMPTION 3. (5 USC 552(b)(3))

Information exempted by other statutes

10 USC Section 130(e) Treatment of Certain Critical Infrastructure Security Information

Pages 12-13

TO REQUEST A COPY OF THE DOCUMENT PLEASE CONTACT

Department of the Navy
Freedom of Information Act Office

http://www.secnav.navy.mil/foia/Pages/default.aspx

ABBREVIATIONS

A	----------
A LABEL	A LABEL CLASS DOOR
A/C	AIR CONDITIONING UNIT
AB	ANCHOR BOLT
ABDN	ABANDON
ACC	ACCESSIBLE
ACI	AMERICAN CONCRETE INSTITUTE
ACOUST	ACOUSTIC(AL)
ACP	ACOUSTICAL CEILING PANEL
ACS	AUTOMATIC CONTROL SYSTEM
ACT	ACOUSTICAL CEILING TILE
ACU	AIR CONDITIONING UNIT
ADA	AMERICANS WITH DISABILITIES ACT
ADD	ADDITIONAL
ADMIN	ADMINISTRATION
AFF	ABOVE FINISH FLOOR
AFG	ABOVE FINISH GRADE
AHU	AIR HANDLING UNIT
AIB	AIR INFILTRATION BARRIER
AISC	AMERICAN INSTITUTE OF STEEL CONSTRUCTION
ALT	ALTERNATE
ALUM	ALUMINUM
ANOD	ANODIZE
APPROX	APPROXIMATE(LY)
APVD	APPROVED
AR	AS REQUIRED
ARCH	ARCHITECT(URAL)
ASC	ABOVE SUSPENDED CEILING
ASSY	ASSEMBLY
ATFP	ANTI-TERRORISM / FORCE PROTECTION
AVG	AVERAGE
AW	ARCHITECTURAL WOODWORK
AWT	ACOUSTICAL WALL TREATMENT
B	----------
B LABEL	B LABEL CLASS DOOR
BALC	BALCONY
BB	BASEBOARD
BD	BOARD
BFF	BELOW FINISH FLOOR
BHMA	BUILDER'S HARDWARE MANUFACTURER'S ASSOCIATION
BL	BASELINE
BLDG	BUILDING
BLKG	BLOCKING
BLT IN	BUILT-IN
BM	BEAM
BN	BULLNOSE
BOF	BOTTOM OF FOOTING
BOS	BOTTOM OF STEEL
BOT	BOTTOM
BP	BUILDING PAPER
BRG	BEARING
BRKT	BRACKET
BSMT	BASEMENT
BTWN	BETWEEN
BUR	BUILT UP ROOF
C	----------
C	CENTER POINT
C CONC	CAST CONCRETE
C LABLE	C LABEL CLASS DOOR
C-C	CENTER TO CENTER
CAB	CABLE
CATW	CATWALK
CAV	CAVITY
CB	CEMENTITIOUS (BACKER) BOARD
CBB	CEMENTITIOUS BACKER BOARD
CD	CONSTRUCTION DOCUMENT(S)
CDW	CHILLED DRINKING WATER
CEM PLAS	CEMENT PLASTER
CER	CERAMIC
CF	CONTRACTOR FURNISHED
CF/CI	CONTRACTOR FURNISHED/ CONTRACTOR INSTALLED
CFE	CONTRACTOR FURNISHED EQUIPMENT
CFLG	COUNTER FLASHING
CFM	CUBIC FEET PER MINUTE
CFMF	COLD FORM METAL FRAMING
CFS	CUBIC FEET PER SECOND
CFT	CERAMIC FLOOR TILE
CG	CORNER GUARD
CI	CAST IRON
CJ	CONTROL JOINT
CL	CENTER LINE
CLG	CEILING
CLG DIFF	CEILING DIFFUSER
CLG HT	CEILING HEIGHT
CLL	COLUMN LINE
CLO	CLOSET
CLR	CLEAR
CLRM	CLASSROOM
CMU	CONCRETE MASONRY UNIT
CNDS	CONDENSATE
CO	CLEANOUT
COL	COLUMN
COMM	COMMUNICATIONS
CONC	CONCRETE
CONC FLR	CONCRETE FLOOR
CONF	CONFERENCE
CONST	CONSTRUCTION
CONT	CONTINUOUS
COORD	COORDINATE
CORR	CORRIDOR
CP	CONCRETE PIPE
CPT	CARPET
CR	CONTROL ROOM
CS	CAST STONE
CSWK	CASEWORK
CT	CERAMIC TILE
CTB	CERAMIC TILE - BASE
CTF	CERAMIC TILE - FLOOR
CTR	CENTER
CTW	CERAMIC TILE - WALL
CU FT	CUBIC FEET
CW	CASEMENT WINDOW
CWT	CERAMIC WALL TILE
D	----------
D	DEPTH
D LABEL	D LABEL CLASS DOOR
DBL	DOUBLE
DEMO	DEMOLISH
DEPT	DEPARTMENT
DET	DETAIL
DF	DRINKING FOUNTAIN
DIA	DIAMETER
DIAG	DIAGONAL
DIM	DIMENSION
DIST	DISTANCE
DK	DECK
DN	DOWN
DOC	DOCUMENT
DR	DOOR
DS	DOWNSPOUT
DWG(S)	DRAWING(S)
E	----------
E	EAST
E LABEL	E LABEL CLASS DOOR
EA	EACH
EF	EACH FACE
EIFS	EXTERIOR INSULATION AND FINISH SYSTEM
EJ	EXPANSION JOINT
EL	ELEVATOR
ELEC	ELECTRIC(AL)
ELEV	ELEVATION
ENGR	ENGINEER
ENTR	ENTRY
EOG	EDGE OF GUTTER
EP	EXPLOSION PROOF
EPS	EXPANDED POLYSTYRENE BOARD
EQ	EQUAL
EQUIP	EQUIPMENT
EW	EACH WAY
EWC	ELECTRIC WATER COOLER
EXIST	EXISTING
EXP	EXPOSED
EXP AB	EXPANSION ANCHOR BOLT
EXPN	EXPANSION
EXPT	EXTERIOR PAINT
EXT	EXTERIOR
EXT GR	EXTERIOR GRADE
F	----------
FA	FIRE ALARM
FAAP	FIRE ALARM ANNUNCIATOR PANEL
FAS BD	FASCIA BOARD
FC BRK	FACE BRICK
FCO	FLOOR CLEAN OUT
FD	FLOOR DRAIN
FDTN	FOUNDATION
FEC	FIRE EXTINGUISHER CABINET
FED	FEDERAL
FF	FINISH FLOOR
FF INSUL	FOIL FACED INSULAITON
FFE	FINISH FLOOR ELEVATION
FG	FINISH GRADE
FGL	FIBERGLASS
FH	FIRE HOSE
FIG	FIGURE
FIN	FINISH (ED)
FIXT	FIXTURE
FL	FLOOR
FLDG	FOLDING
FLEX	FLEXIBLE
FLMT	FLUSH MOUNTED
FLR	FLOOR
FLUOR	FLUORESCENT
FM	FACTORY MUTUAL
FOC	FACE OF CONCRETE
FOM	FACE OF MASONRY
FOS	FACE OF STEEL
FR	FIRE RESISTANT
FRG	FIBER REINFORCED GYPSUM
FRMG	FRAMING
FRP	FIBERGLASS REINFORCED PLASTIC
FRT	FIRE RETARDANT TREATED
FT	FOOT
FTG	FOOTING
FUR	FURRING
FWC	FABRIC WALLCOVERING
G	----------
GA	GAUGE
GAL	GALLON
GALV	GALVANIZED
GB	GRAB BAR
GFCI	GOVERNMENT FURNISHED / CONTRACTOR INSTALLED
GFCMU	GROUND FACE CONCRETE MASONRY UNIT
GL	GRID LINE
GLZ	GLAZING
GR FL	GROUND FLOOR
GRTG	GRATING
GS	GRATING SUPPORT
GV	GRAVEL
GWB	GYPSUM WALL BOARD
GYP	GYPSUM
H	----------
H	HORN
HB	HOSE BIB
HC	HOLLOW CORE
HDPE	HIGH DENSITY POLYETHYLENE
HDW	HARDWARE
HDWD	HARDWOOD
HEPA	HIGH EFFICIENCY PARTICULATE AIR FILTER
HGT	HEIGHT
HK	HOOK
HM	HOLLOW METAL
HORIZ	HORIZONTAL
HT	HEIGHT
HVAC	HEATING VENTILATION AND AIR CONDITIONING
HW, HDWR	HARDWARE
HYD	HYDRAULIC
I	----------
IBC	INTERNATIONAL BUILDING CODE
ICF	INSULATED CONCRETE FORM
IF	INSIDE FACE
IG	INSULATING GLASS
IJ	ISOLATION JOINT
ILO	IN LIEU OF
IN	INCH
INCAND	INCANDESCENT
INSUL	INSULATION
IRP	INSULATED ROOF PANEL
ITG	INSULATED TEMPERED GLASS
IWP	INSULATED WALL PANEL
J	----------
J	JUNCTION BOX
JAN	JANITOR
JST	JOIST
JT	JOINT
K	----------
KIT	KITCHEN
KPD	KEYPAD
KPL	KICKPLATE
L	----------
LAM	LAMINATE
LAV	LAVATORY
LBR	LUMBER
LBS	POUNDS
LDG	LANDING
LF	LINEAR FOOT (FEET)
LG	LONG
LIB	LIBRARY
LIN	LINEAR
LKR	LOCKER
LLH	LONG LEG HORIZONTAL
LLV	LONG LEG VERTICAL
LNT	LINTEL
LOC	LOCATION
LP	LIGHT POLE
LS	LABORATORY SINK
LT	LIGHT
LVDR	LOUVER DOOR
LVR	LOUVER
M	----------
M	METERS
MATL	MATERIAL
MAX	MAXIMUM
MB	MOISTURE BARRIER
MC	MOISTURE CONTENT
MD	METAL DECK
MECH	MECHANICAL (ROOM)
MEMB	MEMBRANE
MF	MILL FINISH
MFR	MANUFACTURER
MID	MIDDLE
MIN	MINIMUM
MIRR	MIRROR
MO	MASONRY OPENING
MOD	MODIFY
MRGWB	MOISTURE RESISTANT GYPSUM WALLBOARD
MTD	MOUNTED
MTG	MOUNTING
MTL	METAL
MWP	MEMBRANE WATERPROOFING
N	----------
N	NORTH
NA	NOT APPLICABLE
ND	NAPKIN DISPOSAL
NDS	NAPKIN DISPENSER
NE	NORTH EAST
NFPA	NATIONAL FIRE PROTECTION ASSOCIATION
NIC	NOT IN CONTRACT
NO	NUMBER
NOM	NOMINAL
NP	NO PAINT
NRC	NOISE REDUCTION COEFFICIENT
NTS	NOT TO SCALE
NW	NORTHWEST
O	----------
O TO O	OUT TO OUT
OA	OVERALL
OC	ON CENTER
OCC	OCCUPANCY/OCCUPANT(S)
OD	OUTSIDE DIAMETER
OFCI	OWNER FURNISHED CONTRACTOR INSTALLED
OFD	OVERFLOW DRAIN
OFF	OFFICE
OFOI	OWNER FURNISHED OWNER INSTALLED
OGL	OBSCURE GLASS
OPH	OPPOSITE HAND
OPNG	OPENING
OPP	OPPOSITE
OPQ	OPAQUE
OPR	OPERABLE
ORIG	ORIGINAL
OSB	ORIENTED STRAND BOARD
OTS	OPEN TO STRUCTURE
OWSJ	OPEN WEB STEEL JOINT
OZ	OUNCE
P	----------
PA	PUBLIC ADDRESS
PAR	PARAPET
PAT	PATTERN
PB	PULL BOX
PBD	PARTICLE BOARD
PCC	PRECAST CONCRETE
PCF	POUND PER CUBIC FOOT
PCT	PERCENT
PEMB	PRE-ENGINEERED METAL BUILDING
PERF	PERFORATED
PERM	PERIMETER
PERP	PERPENDICULAR
PH	PHASE
PIL	PILASTER
PL	PROPERTY LINE
PL GL	PLATE GLASS
PLAM	PLASTIC LAMINATE
PLAS	PLASTIC
PLBG	PLUMBING
PLG	PILING
PLYWD	PLYWOOD
PNL	PANEL
POC	POINT OF CONTACT
POLY	POLYSTYRENE
PP PL	PUSH/PULL PLATE
PR	PAIR
PRCST	PRECAST
PREFAB	PREFABRICATED
PRKG	PARKING
PS CONC	PRESTRESSED CONCRETE
PSF	POUNDS PER SQUARE FOOT
PSI	POUNDS PER SQUARE INCH
PT	PRESSURE TREATED
PTD	PAPER TOWEL DISPENSER
PTDR	PAPER TOWEL DISPENSER AND RECEPTACLE
PTN	PARTITION
PWR	POWER
Q	----------
QT	QUARRY TILE
QTY	QUANTITY
R	----------
R	RISER
RB	RUBBER BASE
RCP	REFLECTED CEILING PLAN
RD	ROOF DRAIN
REC	RECESSED
REF	REFERENCE
REFR	REFRIGERATOR
REM	REMOVABLE
REP	REPAIR
REQ	REQUIRE
REQ'D	REQUIRED
RESIL	RESILIENT
REV	REVISION
RF	RESILIENT FLOORING
RH	RIGHT HAND
RHR	RIGHT HAND REVERSE
RL	ROOF LEADER
RLG	RAILING
RM	ROOM
RO	ROUGH OPENING
RR	RESTROOM
RSD	ROLLING STEEL DOOR
RV	ROOF VENT
RVL	REVEAL
S	----------
S	SOUTH
S2S	SURFACE TWO SIDES
S4S	SURFACE FOUR SIDES
SAPC	SUSPENDED ACOUSTICAL PANEL CEILING
SATC	SUSPENDED ACOUSTICAL TILE CEILING
SB	SPLASH BLOCK
SC	SHOWER CURTAIN
SCHED	SCHEDULE
SCR	SHOWER CURTAIN ROD
SCW	SOLID CORE WOOD
SCWD	SOLID CORE WOOD DOOR
SD	SMOKE DETECTOR
SE	SOUTH EAST
SF	SQUARE FOOT
SF	SQUARE FEET
SFTWD	SOFT WOOD
SGL	SINGLE
SH	SOAP HOLDER
SHR	SHOWER
SHT MTL	SHEET METAL
SHTHG	SHEATHING
SHV	SHELVING
SIM	SIMILAR
SJ	SCORED JOINT
SKLT	SKYLIGHT
SLNT	SEALANT
SLR	SEALER
SM	SQUARE METER
SMHD	SHELF METAL HEAVY DUTY
SMK	SMOKE
SMLS	SEAMLESS
SND	SANITARY NAPKIN AND TAMPON DISPENSER
SP EL	SPOT ELEVATION
SPEC	SPECIFICATIONS
SPF	SPRAY APPLIED POLYURETHANE FOAM INSULATION
SQ	SQUARE
SQ FT	SQUARE FOOT (FEET)
SQ IN	SQUARE INCH
SQ M	SQUARE METER
SQ YD	SQUARE YARD
SS	STAINLESS STEEL
SSMR	STANDING SEAM METAL ROOF
ST	STAIRS
STC	SOUND TRANSMISSION CLASS
STD	STANDARD
STL	STEEL
STL JST	STEEL JOIST
STL RF DK	STEEL ROOF DECK
STOR	STORAGE
STR	STRINGER
STRB/HRN	STROBE / HORN
STRUCT	STRUCTURE(AL)
SUB FL	SUB FLOOR
SUSP	SUSPENDED
SV	SHEET VINYL
SW	SOUTHWEST
SYM	SYMMETRICAL
T	----------
T	TREAD
T&G	TONGUE AND GROOVE
T/S	TUB / SHOWER
TB	TOWEL BAR
TC	TERRA COTTA
TD	TRAVEL DISTANCE
TEL	TELEPHONE
TEMP	TEMPORARY
TER	TERRAZZO
TFF	TOP OF FINISH FLOOR
THK	THCKNESS
TK BD	TACK BOARD
TLT	TOILET
TMPD GL	TEMPERED GLASS
TN	TRUE NORTH
TOF	TOP OF FOOTING
TOM	TOP OF MASONRY
TOP	TOP OF PARAPET
TOPO	TOPOGRAPHY
TOS	TOP OF SLAB
TRANS	TRANSLUCENT
TRTD	TREATED
TS	TUBE STEEL
TV	TELEVISION
TYP	TYPICAL
U	----------
UNF	UNFINISHED
UNO	UNLESS NOTED OTHERWISE
UR	URINAL
V	----------
VB	VAPOR BARRIER
VCT	VINYL COMPOSITION TILE
VERT	VERTICAL
VR	VAPOR RETARDER
VTC	VIDEO TELECONFERENCE
VTR	VENT THROUGH ROOF
W	----------
W	WEST
W/	WITH
W/O	WITHOUT
WC	WATER CLOSET
WD	WOOD
WG	WIRE GLASS
WOM	WALK OFF MAT
WR	WASTE RECEPTACLE
WRB	WEATHER RESISTANT BARRIER
WRGWB	WATER RESISTANT GYPSUM WALLBOARD
WS	WATER STOP
WTP	WATER TREATMENT PLANT
WWTP	WASTE WATER TREATMENT PLANT

GENERAL NOTES

1. THE DRAWINGS INDICATE THE GENERAL EXTENT OF WORK. THE DRAWINGS ARE NOT INTENDED TO INDICATE OR DESCRIBE ALL WORK REQUIRED FOR THE FULL PERFORMANCE AND COMPLETION OF THE REQUIREMENTS OF THE CONTRACT DOCUMENTS. REPETITIVE FEATURES NOT NOTED ON THE DRAWINGS SHALL BE COMPLETELY PROVIDED AS IF DRAWN IN FULL.

2. GRID LINES INDICATE THE CENTER LINE OF PRIMARY COLUMNS ONLY, SEE STRUCTURAL PLANS FOR EXACT LOCATION AND SIZES OF INDIVIDUAL COLUMNS.

3. ROOM AND DOOR NUMBERS SHOWN ON DRAWINGS ARE FOR CONSTRUCTION PURPOSES ONLY.

4. DIMENSIONS ON DRAWINGS ARE TAKEN FROM THE LOCATIONS LISTED BELOW:

   FACE OF CMU WALLS

   MASONRY OPENING OF DOORS

   MASONRY OPENING OF WINDOWS

   GRID LINES

   MASONRY OPENINGS OF OTHER ELEMENTS

5. DIMENSIONS ON INTERIOR ELEVATIONS ARE TAKEN FROM THE LOCATIONS LISTED BELOW:

   FINISHED CMU

   FACE OF PLASTIC LAMINATE

   FACE OF CABINETRY

   CENTERLINE OF FIXTURES

6. ALL WORK SHALL COMPLY WITH APPLICABLE BUILDING CODES, ORDINANCES AND REGULATORY AGENCIES. SEE SHEET A-002 FOR CODE REVIEW AND SHEETS A-003 AND A-004 FOR ARCHITECTURAL LIFE SAFETY PLANS FOR ADDITIONAL INFORMATION

7. NFPA 241, STANDARD FOR SAFEGUARDING CONSTRUCTION, AND ALTERATION OPERATIONS SHALL BE APPLIED TO THIS PROJECT.

8. BUILDING HEIGHTS AND ELEVATIONS ARE BASED UPON PROJECT FINISH ELEVATION OF 100'-0" AT THE FIRST FLOOR. REFERENCE CIVIL DRAWINGS FOR FIRST FLOOR ELEVATIONS RELATIVE TO SEA LEVEL.

9. CONFIRM QUANTITY, TYPE AND PLACEMENT OF ALL FIRE EXTINGUISHERS WITH THE FIRE MARSHAL OR AUTHORITY HAVING JURISDICTION. COORDINATE FINAL LOCATIONS WITH THE CONTRACTING OFFICER PRIOR TO PLACEMENT.

10. MECHANICAL, ELECTRICAL, CIVIL, STRUCTURAL AND PROCESS INFORMATION ON THE ARCHITECTURAL DRAWINGS IS PROVIDED FOR CLARITY AND / OR LOCATION COORDINATION PURPOSES ONLY, SEE RELEVANT DISCIPLINE DRAWINGS FOR SPECIFIC INFORMATION.

11. DO NOT BEGIN WORK THAT MAY REQUIRE COORDINATION, SUCH AS CEILING INSTALLATION, PRIOR TO FINAL SUBMITTAL OF MECHANICAL AND ELECTRICAL COORDINATION DRAWINGS TO CONTRACTING OFFICER NOR PRIOR TO RESOLUTION AND APPROVAL OF COORDINATION ISSUES.

12. ROOF PITCHES INDICATED ARE NOMINAL. SEE STRUCTURAL DRAWINGS FOR BEARING HEIGHTS.

13. WORK SHALL CONFORM TO APPLICABLE INDUSTRY AND MANUFACTURER'S PUBLISHED STANDARDS FOR QUALITY OF MATERIALS AND WORKMANSHIP, AS WELL AS REQUIREMENTS IN THESE DRAWINGS AND SPECIFICATIONS. ANY CONFLICTING REQUIREMENTS OF THE SOURCES LISTED ABOVE SHALL BE BROUGHT TO THE CONTRACTING OFFICER'S ATTENTION PRIOR TO PROCEEDING WITH THE WORK.

14. PROTECT EXISTING, IN-PLACE AND NEW WORK.

15. THE CONTRACTOR SHALL VERIFY EXISTING DIMENSIONS AND CONDITIONS PRIOR TO START OF THEIR WORK. THE CONTRACTOR SHALL NOTIFY THE CONTRACTING OFFICER, IN WRITING, OF ANY DISCREPANCIES, OMISSIONS, OR CONFLICTS BEFORE COMMENCEMENT OF THEIR WORK IF THE WORK SHALL CONSTITUTE THE CONTRACTOR'S ACCEPTANCE OF ALL NEW OR EXISTING CONDITIONS

16. PROVIDE UNDERSLAB TERMITE PROTECTION AS REQUIRED BY GOVERNING BUILDING CODE REQUIREMENTS.

17. PIPE DUCTS AND BUSS DUCTS THAT PENETRATE FLOOR SLABS OR WALL PARTITIONS SHALL BE INSTALLED IN A MANNER THAT WILL PRESERVE THE MOISTURE RESISTANCE, FIRE RATING, AIR AND/OR VAPOR BARRIER, AND STRUCTURAL INTEGRITY OF THE BUILDING.

18. ALL CONCEALED WOOD FRAMING, AND PLYWOOD SHALL BE FIRE RETARDANT TREATED (FRT) EXCEPT THAT NON-FRT BLOCKING, NAILERS AND FURRING MAY BE USED WHERE INSTALLED IN ACCORD WITH IBC 718 (INCLUDING DIMENSIONAL WOOD BLOCKING, FIRE BLOCKING, REQUIREMENTS, ETC.). WOOD BLOCKING INSTALLED IN ACCORD WITH IBC SECTION 603 FOR HANDRAILS, MILLWORK, CABINETS, WINDOWS AND DOORS IS NOT REQUIRED TO BE FRT. AT COPINGS AND ROOFING TERMINATIONS ALL BLOCKING SHALL BE PRESSURE TREATED (PT).

19. AT EXTERIOR MASONRY WALLS, CMU SHALL BE EXTENDED TIGHT TO FLOOR AND / OR ROOF DECKS, INCLUDING AROUND ALL PENETRATIONS SUCH AS BEAMS, JOIST ENDS, AND ETC. FILLING VOIDS IN EXT. CMU BACK-UP WITH INSULATION IN LIEU OF A SOLID MASONRY ENCLOSURE SHALL NOT BE PERMITTED.

20. VERTICAL COURSING FOR NEW MASONRY WALL CONSTRUCTION SHALL EQUAL EIGHT INCHES (8") FOR ONE CONCRETE MASONRY UNIT PLUS ONE MORTAR JOINT AND THREE BRICK COURSES PLUS THREE MORTAR JOINTS, UNLESS NOTED OTHERWISE.

21. PROVIDE CONTROL JOINTS (C.J.) IN MASONRY WALL CONSTRUCTION AS INDICATED. WHERE NOT SHOWN, PROVIDE MAXIMUM SPACING BETWEEN JOINTS OF 40'-0" AND MAXIMUM DISTANCE BETWEEN OUTSIDE CORNERS AND JOINTS OF 10'-0." PROVIDE JOINTS BETWEEN INTERIOR LOAD BEARING AND NON-LOAD BEARING PARTITIONS, AT ALL ABRUPT CHANGES IN WALL HEIGHT, AT CHANGES IN PARTITION THICKNESS AND AT PILASTER LOCATIONS. VERIFY FINAL CONTROL JOINT LOCATIONS WHETHER OR NOT INDICATED ON THE DRAWINGS WITH CONTRACTING OFFICER PRIOR TO STARTING WORK.

22. INTERIOR PARTITION MOVEMENT CONTROL: (A). VERTICAL CONTROL JOINTS FOR ANY WALL ARE TO OCCUR AT NOT MORE THAN 30'-0" O.C. IN THE HORIZONTAL DIRECTION, UNO. (B). THE TYPICAL MOVEMENT OF THE STRUCTURE DUE TO DEFLECTION AT THE HEAD OF THE WALL CONSTRUCTION RUNNING TO THE UNDERSIDE OF THE STRUCTURE SHALL BE +/- 1/2".

23. PROVIDE FINISHED END PANELS, FILLERS, SUPPORTS, ETC. REQUIRED FOR A COMPLETE CABINETRY INSTALLATION. PROVIDE CUTOUTS, ACCESS PANELS AND REMOVABLE COMPONENTS AS REQUIRED BY NEW OR EXISTING CONDITIONS SUCH AS ELECTRICAL OUTLETS, JUNCTION BOXES, CLEANOUTS, ETC.

24. PROVIDE SEALANT BETWEEN HOLLOW METAL FRAME PERIMETERS AND SURROUNDING WALL CONSTRUCTION UNLESS OTHERWISE INDICATED.

25. PROVIDE SEALANT BETWEEN INTERIOR AND EXTERIOR WINDOW AND STOREFRONT FRAME PERIMETERS AND SURROUNDING CONSTRUCTION UNLESS OTHERWISE INDICATED. DO NOT BLOCK DRAINAGE CHANNELS OR WEEPS.

26. CHAMFER EXTERNAL CORNERS OF EXPOSED CONCRETE WALLS 1" TYPICAL. UNLESS OTHERWISE NOTED. COORDINATE WITH STRUCTURAL.

27. FLASHING COLOR TO MATCH ADJACENT WALL COLOR UNLESS NOTED OTHERWISE.

28. ALL WOOD IN CONTACT WITH CONCRETE OR MASONRY SHALL BE PRESERVATIVE TREATED WOOD.

29. PROVIDE EXPANSION AND CONTROL JOINTS IN ALL WORK AS PER PRODUCT MANUFACTURER'S STANDARDS.

30. ALL DISSIMILAR MATERIALS SHALL BE ISOLATED FROM EACH OTHER TO AVOID GALVANIC CORROSION.

31. PROVIDE ACCESS PANELS AS REQUIRED BY APPLICABLE CODES AND AS REQUIRED FOR MECHANICAL EQUIPMENT AND PLUMBING WORK AND MAINTENANCE. ALL ACCESS PANEL LOCATIONS SHALL BE REVIEWED WITH THE CONTRACTING OFFICER/S REPRESENTATIVE PRIOR TO PROCEEDING.

32. "ALIGN" AS USED IN THESE DOCUMENTS SHALL MEAN TO ACCURATELY LOCATE FINISHED FACES IN THE SAME PLAN AND/OR TO INSTALL NEW CONSTRUCTION ADJACENT TO EXISTING CONSTRUCTION WITHOUT ANY VISIBLE JOINTS OR SURFACE IRREGULARITIES.

33. "CLEAR" AS USED IN THESE DOCUMENTS SHALL MEAN THAT THE CONDITION IS NOT ADJUSTABLE WITHOUT APPROVAL OF THE CONTRACTING OFFICER. CLEAR DIMENSIONS ARE TYPICAL.

34. "MAXIMUM" OR "MAX" AS USED IN THESE DOCUMENTS SHALL MEAN THAT THE CONDITION IS SLIGHTLY ADJUSTABLE BUT MAY NOT VARY TO A DIMENSION OR QUANTITY GREATER THAN THAT SHOWN WITHOUT APPROVAL OF THE ARCHITECT.

35. "MINIMUM" OR "MIN" AS USED IN THESE DOCUMENTS SHALL MEAN THAT THE CONDITION IS SLIGHTLY ADJUSTABLE BUT MAY NOT VARY TO A DIMENSION OR QUANTITY LESS THAN THAT SHOWN WITHOUT APPROVAL OF THE CONTRACTING OFFICER.

36. "TYPICAL" AS USED IN THESE DOCUMENTS SHALL MEAN THAT THE CONDITION OR DIMENSION IS THE SAME OR REPRESENTATIVE FOR SIMILAR CONDITIONS THROUGHOUT.

37. "+/-" AS USED IN THESE DOCUMENTS SHALL MEAN THAT THE DIMENSION OR QUALITY IS SLIGHTLY ADJUSTABLE TO ACCOMMODATE ACTUAL CONDITIONS, FIELD VERIFICATION AND COORDINATION WITH OTHER ELEMENTS AS MIGHT BE NECESSARY.

ISSUED FOR BID - FEBRUARY 2026

THIS DRAWING PRODUCED ON REVIT
DO NOT REVISE MANUALLY

"THIS DOCUMENT IS THE PROPERTY OF NAVAL FACILITIES ENGINEERING COMMAND, PREPARED BY TETRA TECH ENGINEERING CORPORATION PC, AND IS PROVIDED UPON THE CONDITION THAT IT WILL NOT BE REPRODUCED, COPIED, OR ISSUED TO A THIRD PARTY, AND WILL BE USED SOLELY FOR THE ORIGINAL INTENDED PURPOSE AND SOLELY FOR THE EXECUTION OR REVIEW OF THE ENGINEERING CONSTRUCTION OF THE PROJECT".

IT IS A VIOLATION OF THE NEW YORK STATE EDUCATION LAW, ARTICLE 145, FOR ANY PERSON, UNLESS UNDER THE DIRECTION OF A NEW YORK STATE LICENSED PROFESSIONAL ENGINEER, TO ALTER AN ITEM ON THIS DOCUMENT IN ANY WAY.

SYM	DESCRIPTION	DATE	APPR

NAVFAC

REGISTERED ARCHITECT JAMES QUINTIN BILLIG 035335 STATE OF NEW YORK

3/24/26
SEAL

TETRA TECH
www.tetratech.com
4433 CORPORATION LANE, SUITE 300
VIRGINIA BEACH, VA 23462
PHONE: (757) 461-3788 FAX: (757) 461-4148
AE INFO

APPROVED
FOR COMMANDER NAVFAC 5/26/2026

ACTIVITY
As per document from Nicole Cowand, NAVFAC MIDLANT PLL/EV3.

SATISFACTORY TO DATE 3/24/26

DES LD | DRW MA | CHK NS

PM/DM
BRANCH MANAGER
CHIEF ENG/ARCH
FIRE PROTECTION

DEPARTMENT OF THE NAVY
NAVAL FACILITIES ENGINEERING SYSTEMS COMMAND ~ MID-ATLANTIC
NAVAL FACILITIES ENGINEERING COMMAND
NAVAL INDUSTRIAL RESERVE ORDNANCE PLANT
NAVAL WEAPONS INDUSTRIAL RESERVE PLANT
BETHPAGE, NEW YORK
PHASE III - GROUNDWATER TREATMENT PLANT
ARCHITECTURAL ABBREVIATIONS AND GENERAL NOTES

SCALE: AS NOTED
EPROJECT NO.:
CONSTR. CONTR. NO. N62472-99-D-0032
NAVFAC DRAWING NO.
SHEET 1 OF 20
A-001

DRAWFORM REVISION: 25 AUGUST 2020

A-001
4/23/2026 2:15:32 PM
Autodesk Docs://112G08005-WE24 Navy Bethpage NY-Phase III /A-112G08005_PHASEIII_GWTP_v2023.rvt

NOTIFICATION: THIS PAGE CONTAINS SENSITIVE BUT UNCLASSIFIED INFORMATION WHICH IS PROTECTED BY THE FREEDOM OF INFORMATION ACT

EXEMPTION 3. (5 USC 552(b)(3))

Information exempted by other statutes

10 USC Section 130(e) Treatment of Certain Critical Infrastructure Security Information

Pages 16- 4

TO REQUEST A COPY OF THE DOCUMENT PLEASE CONTACT

Department of the Navy
Freedom of Information Act Office

http://www.secnav.navy.mil/foia/Pages/default.aspx

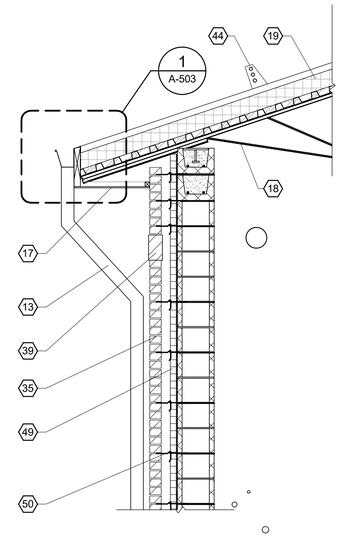

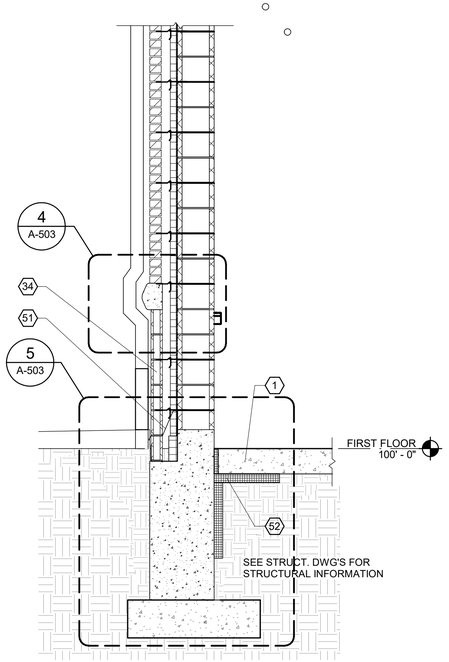

1 A-302 TYP. WALL SECTION
SCALE: 1/2" = 1'-0"

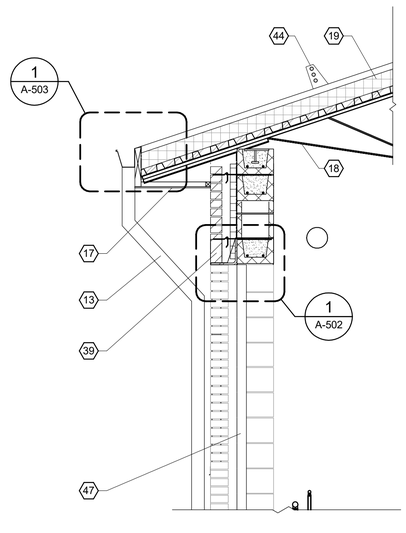

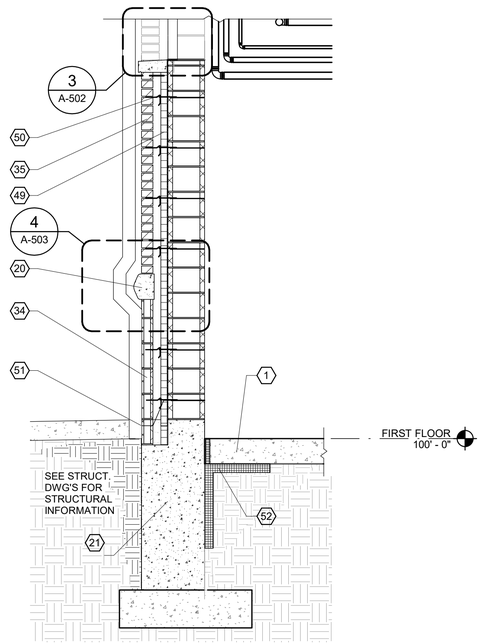

2 A-302 TYP. WALL SECTION - THROUGH TRANS. PANEL
SCALE: 1/2" = 1'-0"

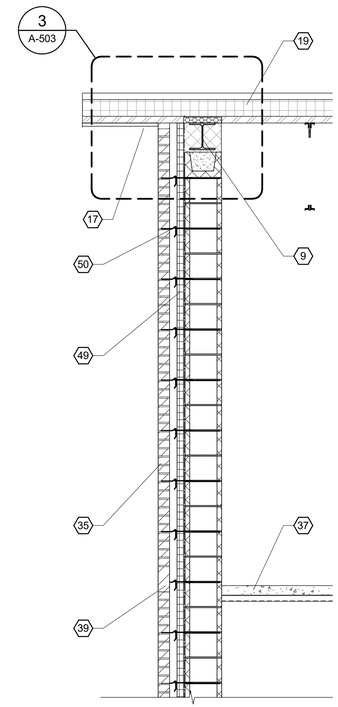

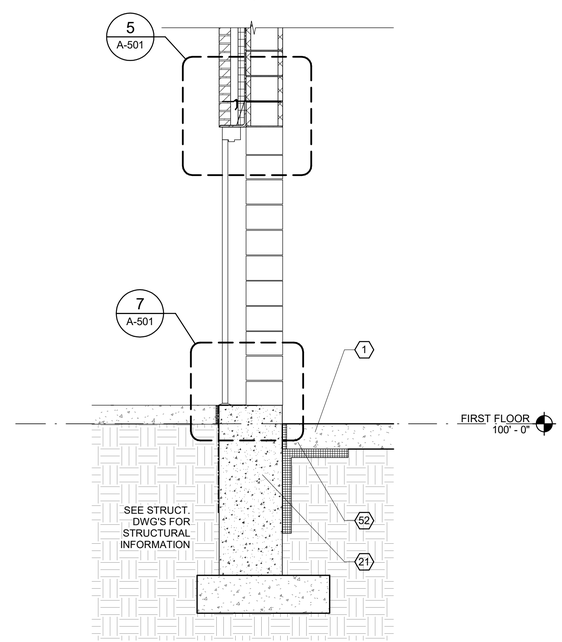

3 A-302 TYP WALL SECTION - THROUGH DOOR
SCALE: 1/2" = 1'-0"

KEYNOTES

#	
1	REINFORCED CONCRETE SLAB ON GRADE; SEE STRUCTURAL DRAWINGS
9	STRUCTURAL STEEL COLUMN ON CONCRETE PIER - SEE STRUCT. DWGS.
13	PRE-FINISHED ALUMINUM DOWNSPOUTS WITH CAST IRON BOOT AT GRADE; DOWNSPOUTS TO LEAD TO UNDERGROUND STORM WATER PIPING, SEE CIVIL DRAWINGS FOR MORE DETAIL
17	PRE-FINISHED ALUMINUM SOFFIT ABOVE
18	SEE STRUCTURAL DRAWINGS FOR LOCATION AND DETAILS OF COLD FORMED STEEL (CFS) ROOF TRUSSES
19	ROOF SYSTEM 1 (RS-1); SEE ROOF PLAN LEGEND FOR WATER TREATMENT PLAN ON SHEET A-104
20	PRE-CAST WATER TABLE
21	REINFORCED CONCRETE FOUNDATION; SEE STRUCTURAL DRAWINGS
34	4" W. X 8" H. X 16" LONG (NOM.) SPLIT FACE CMU VENEER BLOCK
35	4" W. X 2 1/4" H. X 8" LONG (NOM.) BRICK VENEER OVER CMU EXTERIOR BLOCK WALL; BRICK VENEER TO RECEIVE A WATER REPELLENT, INCLUDING EDGES AND RETURNS ADJACENT TO WINDOW AND DOOR FRAMES AS WELL AS ANY FREE STANDING WALLS
37	REINFORCED CONCRETE SLAB OVER METAL DECK (SHOWN HATCHED, TYP.) - SEE STRUCTURAL DRAWINGS
39	8" HIGH BRICK SOLDIER COURSE AT 18'-8" AFF
44	SNOW GUARD
47	HIGH PERFORMANCE TRANSLUSCENT PANEL
49	CONT. 2" RIGID INSULATION (MIN R-9.5)
50	HORIZ. MASONRY JOINT REINFORCING AND BRICK TIES - SEE SPECS AND STRUCT. DWGS
51	THRU-WALL FLASHING - MIN. 12" HEIGHT
52	RIGID INSULATION 2'-0" MIN. HORIZ. AND 2'-0" MIN. BELOW GRADE VERT. UNDER SLAB AT PERIMETER OF BUILDING

SYM	DESCRIPTION	DATE	APPR

NAVFAC

REGISTERED ARCHITECT JAMES QUINTIN MILLS 035335 STATE OF NEW YORK

3/24/26
SEAL

TETRA TECH
www.tetratech.com
4433 CORPORATION LANE, SUITE 300
VIRGINIA BEACH, VA 23462
PHONE: (757) 461-3788 FAX: (757) 461-4148
A/E INFO

APPROVED
FOR COMMANDER NAVFAC 5/26/2026

ACTIVITY
As per document from Nicole Cowand, NAVFAC MIDLANT PLL/EV3.

SATISFACTORY TO DATE 3/24/26

DES LD | DRW MA | CHK NS

PM/DM
BRANCH MANAGER
CHIEF ENG/ARCH
FIRE PROTECTION

0 1' 2' 4'
SCALE: 1/2" = 1'-0"

THIS DRAWING PRODUCED ON REVIT
DO NOT REVISE MANUALLY

"THIS DOCUMENT IS THE PROPERTY OF NAVAL FACILITIES ENGINEERING COMMAND, PREPARED BY TETRA TECH ENGINEERING CORPORATION PC, AND IS PROVIDED UPON THE CONDITION THAT IT WILL NOT BE REPRODUCED, COPIED, OR ISSUED TO A THIRD PARTY, AND WILL BE USED SOLELY FOR THE ORIGINAL INTENDED PURPOSE AND SOLELY FOR THE EXECUTION OR REVIEW OF THE ENGINEERING CONSTRUCTION OF THE PROJECT".

IT IS A VIOLATION OF THE NEW YORK STATE EDUCATION LAW, ARTICLE 145, FOR ANY PERSON, UNLESS UNDER THE DIRECTION OF A NEW YORK STATE LICENSED PROFESSIONAL ENGINEER, TO ALTER AN ITEM ON THIS DOCUMENT IN ANY WAY.

DEPARTMENT OF THE NAVY
NAVAL FACILITIES ENGINEERING SYSTEMS COMMAND ~ MID-ATLANTIC
NAVAL INDUSTRIAL RESERVE ORDNANCE PLANT
NAVAL WEAPONS INDUSTRIAL RESERVE PLANT
BETHPAGE, NEW YORK
PHASE III - GROUNDWATER TREATMENT PLANT
ARCHITECTURAL WALL SECTIONS

SCALE: AS NOTED
EPROJECT NO.:
CONSTR. CONTR. NO. N62472-99-D-0032
NAVFAC DRAWING NO.
SHEET 11 OF 20
A-302

DRAWFORM REVISION: 25 AUGUST 2020

ISSUED FOR BID - FEBRUARY 2026

4/23/2026 2:16:16 PM A-302
Autodesk Docs://TEG9800S-WE24 Navy- Bethpage NY-Phase III /A-112G08005_PHASEIII_GWTP_v2023.rvt

NOTIFICATION: THIS PAGE CONTAINS SENSITIVE BUT UNCLASSIFIED INFORMATION WHICH IS PROTECTED BY THE FREEDOM OF INFORMATION ACT

EXEMPTION 3. (5 USC 552(b)(3))

Information exempted by other statutes

10 USC Section 130(e) Treatment of Certain Critical Infrastructure Security Information

Pages -

TO REQUEST A COPY OF THE DOCUMENT PLEASE CONTACT

Department of the Navy
Freedom of Information Act Office

http://www.secnav.navy.mil/foia/Pages/default.aspx

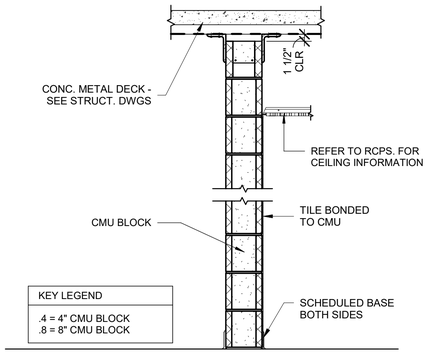

1 A-501 PARTITION TYPE P1
SCALE: 3/4" = 1'-0"

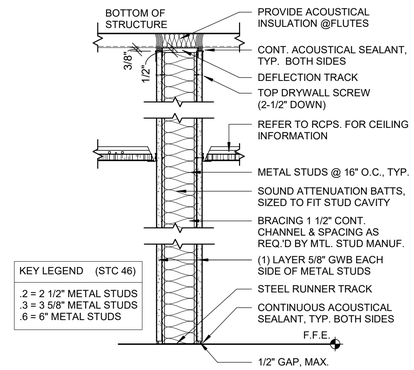

2 A-501 PARTITION TYPE P2
SCALE: 1 1/2" = 1'-0"

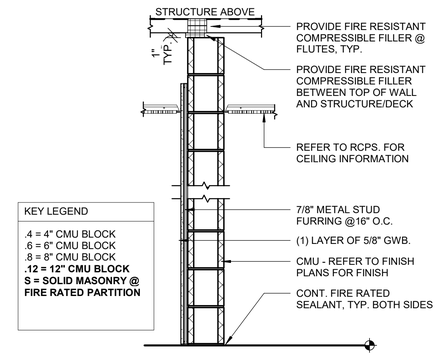

3 A-501 PARTITION TYPE P3
SCALE: 3/4" = 1'-0"

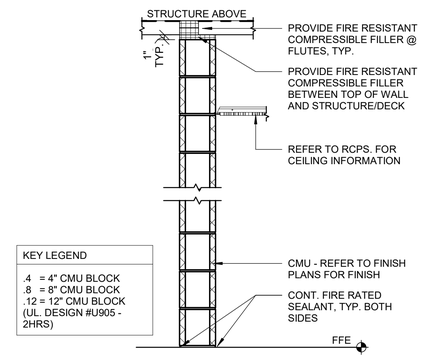

4 A-501 PARTITION TYPE P4
SCALE: 3/4" = 1'-0"

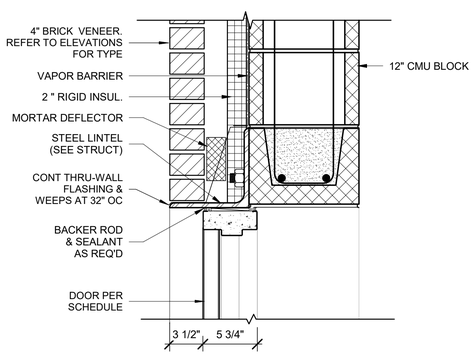

5 A-501 TYP. EXT. DOOR HEAD DETAIL
SCALE: 1 1/2" = 1'-0"

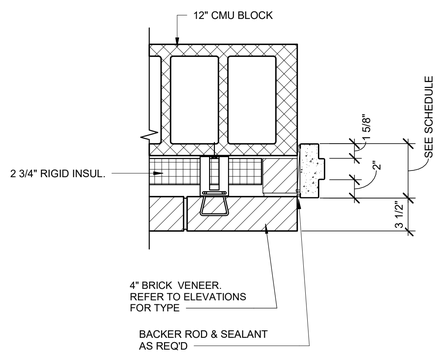

6 A-501 TYP. EXT. DOOR JAMB DETAIL
SCALE: 1 1/2" = 1'-0"

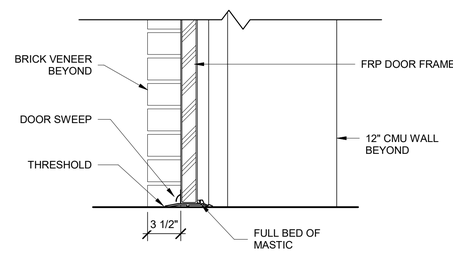

7 A-501 TYP. EXT. DOOR SILL DETAIL
SCALE: 1 1/2" = 1'-0"

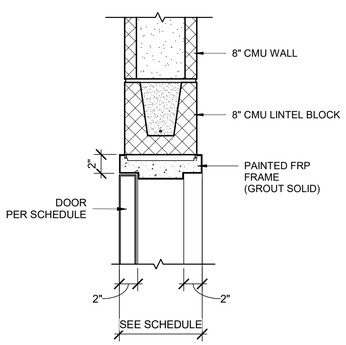

8 A-501 TYP. INT. DOOR HEAD DETAIL
SCALE: 1 1/2" = 1'-0"

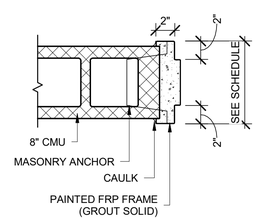

9 A-501 TYP. INT. JAMB DETAIL
SCALE: 1 1/2" = 1'-0"

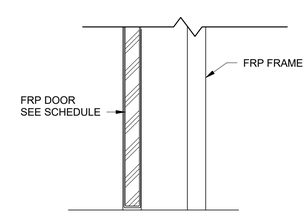

10 A-501 TYP. INT. DOOR SILL DETAIL
SCALE: 1 1/2" = 1'-0"

ISSUED FOR BID - FEBRUARY 2026

SYM	DESCRIPTION	DATE	APPR

NAVFAC

REGISTERED ARCHITECT JAMES QUINTIN MAO 035335 STATE OF NEW YORK

3/24/26
SEAL

TETRA TECH
www.tetratech.com
4433 CORPORATION LANE, SUITE 300
VIRGINIA BEACH, VA 23462
PHONE: (757) 461-3788 FAX: (757) 461-4148
Alt. INFO

APPROVED
FOR COMMANDER NAVFAC 5/26/2026

ACTIVITY
As per document from Nicole Cowand, NAVFAC MIDLANT PLL/EV3.

SATISFACTORY TO DATE 3/24/26
DES LD DRW MA CHK NS
PM/DM
BRANCH MANAGER
CHIEF ENG/ARCH
FIRE PROTECTION

DEPARTMENT OF THE NAVY
NAVAL FACILITIES ENGINEERING SYSTEMS COMMAND ~ MID-ATLANTIC
NAVAL FACILITIES ENGINEERING COMMAND
NAVAL INDUSTRIAL RESERVE ORDNANCE PLANT
NAVAL WEAPONS INDUSTRIAL RESERVE PLANT
BETHPAGE, NEW YORK
PHASE III - GROUNDWATER TREATMENT PLANT
ARCHITECTURAL PARTITION TYPES, AND DOOR DETAILS

SCALE: AS NOTED
EPROJECT NO.:
CONSTR. CONTR. NO. N62472-99-D-0032
NAVFAC DRAWING NO.
SHEET 14 OF 20
A-501

DRAWFORM REVISION: 25 AUGUST 2020

THIS DRAWING PRODUCED ON REVIT
DO NOT REVISE MANUALLY

"THIS DOCUMENT IS THE PROPERTY OF NAVAL FACILITIES ENGINEERING COMMAND, PREPARED BY TETRA TECH ENGINEERING CORPORATION PC, AND IS PROVIDED UPON THE CONDITION THAT IT WILL NOT BE REPRODUCED, COPIED, OR ISSUED TO A THIRD PARTY, AND WILL BE USED SOLELY FOR THE ORIGINAL INTENDED PURPOSE AND SOLELY FOR THE EXECUTION OR REVIEW OF THE ENGINEERING CONSTRUCTION OF THE PROJECT".

IT IS A VIOLATION OF THE NEW YORK STATE EDUCATION LAW, ARTICLE 145, FOR ANY PERSON, UNLESS UNDER THE DIRECTION OF A NEW YORK STATE LICENSED PROFESSIONAL ENGINEER, TO ALTER AN ITEM ON THIS DOCUMENT IN ANY WAY.

4/23/2026 2:16:27 PM
A-501
Autodesk Docs://1123088005-WEA Navy- Bethpage NY-Phase III /A-1123088005_PHASEIII_GWTP_v2023.rvt

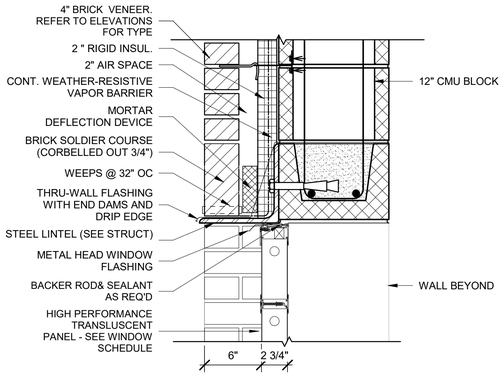

1 A-502 TYP. TRANS. PANEL HEAD DETAIL - CMU/BRICK WALL
SCALE: 1 1/2" = 1'-0"

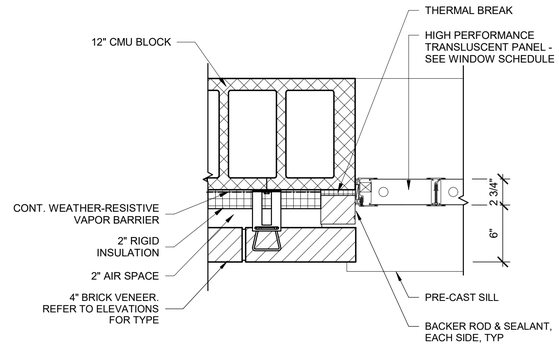

2 A-502 TYP. TRANS. PANEL JAMB DETAIL - CMU/BRICK WALL
SCALE: 1 1/2" = 1'-0"

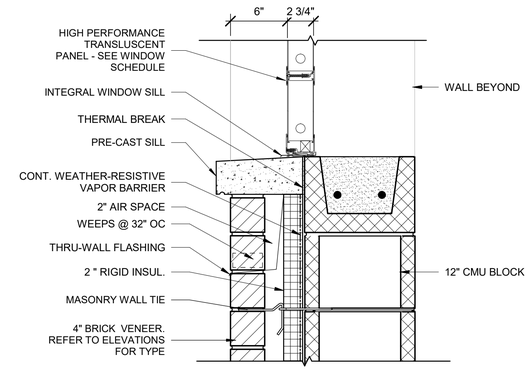

3 A-502 TYP. TRANS. PANEL SILL DETAIL - CMU/BRICK WALL
SCALE: 1 1/2" = 1'-0"

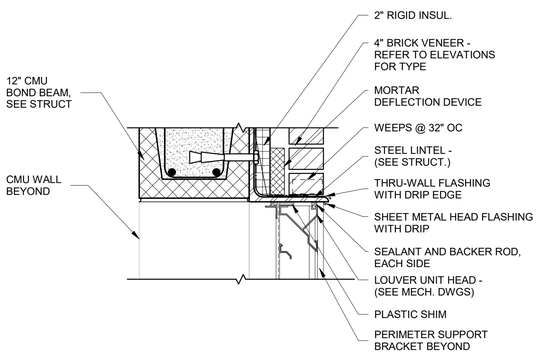

4 A-502 LOUVER HEAD DETAIL
SCALE: 1 1/2" = 1'-0"

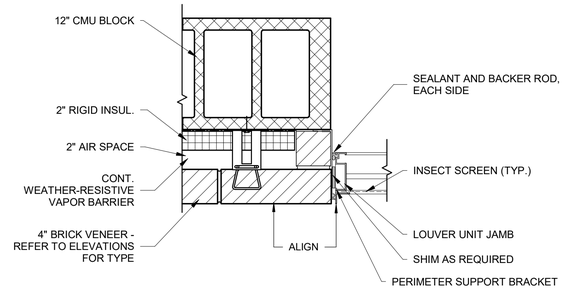

5 A-502 LOUVER JAMB DETAIL
SCALE: 1 1/2" = 1'-0"

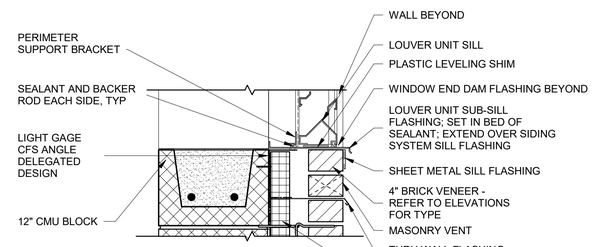

6 A-502 LOUVER SILL DETAIL
SCALE: 1 1/2" = 1'-0"

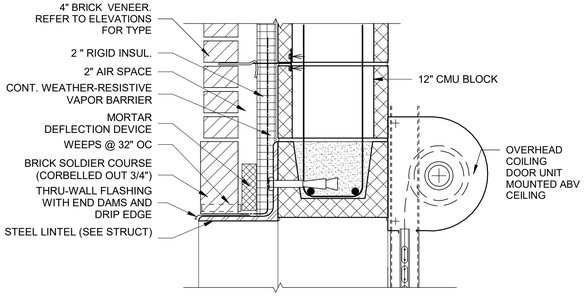

7 A-502 TYP. OVERHEAD DOOR HEAD DETAIL
SCALE: 1 1/2" = 1'-0"

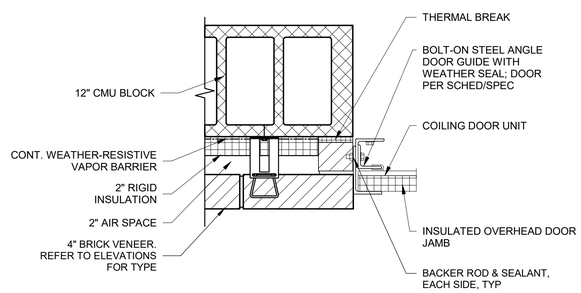

8 A-502 COILING DOOR JAMB DETAIL
SCALE: 1 1/2" = 1'-0"

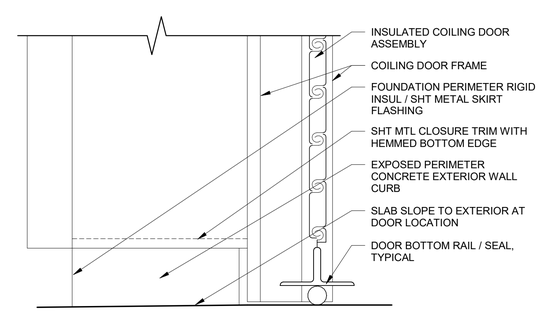

9 A-502 COILING DOOR SILL DETAIL
SCALE: 3" = 1'-0"

ISSUED FOR BID - FEBRUARY 2026

THIS DRAWING PRODUCED ON REVIT
DO NOT REVISE MANUALLY

"THIS DOCUMENT IS THE PROPERTY OF NAVAL FACILITIES ENGINEERING COMMAND, PREPARED BY TETRA TECH ENGINEERING CORPORATION PC, AND IS PROVIDED UPON THE CONDITION THAT IT WILL NOT BE REPRODUCED, COPIED, OR ISSUED TO A THIRD PARTY, AND WILL BE USED SOLELY FOR THE ORIGINAL INTENDED PURPOSE AND SOLELY FOR THE EXECUTION OR REVIEW OF THE ENGINEERING CONSTRUCTION OF THE PROJECT".

IT IS A VIOLATION OF THE NEW YORK STATE EDUCATION LAW, ARTICLE 145, FOR ANY PERSON, UNLESS UNDER THE DIRECTION OF A NEW YORK STATE LICENSED PROFESSIONAL ENGINEER, TO ALTER AN ITEM ON THIS DOCUMENT IN ANY WAY.

SYM	DESCRIPTION	DATE	APPR

NAVFAC

REGISTERED ARCHITECT JAMES QUINTIN BIRD 035335 STATE OF NEW YORK
3/24/26
SEAL

TETRA TECH
www.tetratech.com
4433 CORPORATION LANE, SUITE 300
VIRGINIA BEACH, VA 23462
PHONE: (757) 461-3788 FAX: (757) 461-4148
A/E INFO

APPROVED
FOR COMMANDER NAVFAC 5/28/2026
ACTION
"As per document from Nicole Coward, NAVFAC MIDLANT PLL/EV3.
SATISFACTORY TO DATE 3/24/26
DES LD DRW MA CHK NS
PM/DM
BRANCH MANAGER
CHIEF ENG/ARCH
FIRE PROTECTION

DEPARTMENT OF THE NAVY
NAVAL FACILITIES ENGINEERING SYSTEMS COMMAND ~ MID-ATLANTIC
NAVAL FACILITIES ENGINEERING COMMAND
NAVAL INDUSTRIAL RESERVE ORDNANCE PLANT
NAVAL WEAPONS INDUSTRIAL RESERVE PLANT
BETHPAGE, NEW YORK
PHASE III - GROUNDWATER TREATMENT PLANT
TRANS. PANEL AND LOUVER DETAILS

SCALE: AS NOTED
EPROJECT NO.:
CONSTR. CONTR. NO. N62472-99-D-0032
NAVFAC DRAWING NO.
SHEET 15 OF 20
A-502

DRAWFORM REVISION: 25 AUGUST 2020

A-502
4/23/2026 2:18:29 PM
Autodesk Docs://12G080/05-WE24 Navy- Bethpage NY-Phase III /A-112G080/05_PHASEIII_GWTP_v2023.rvt

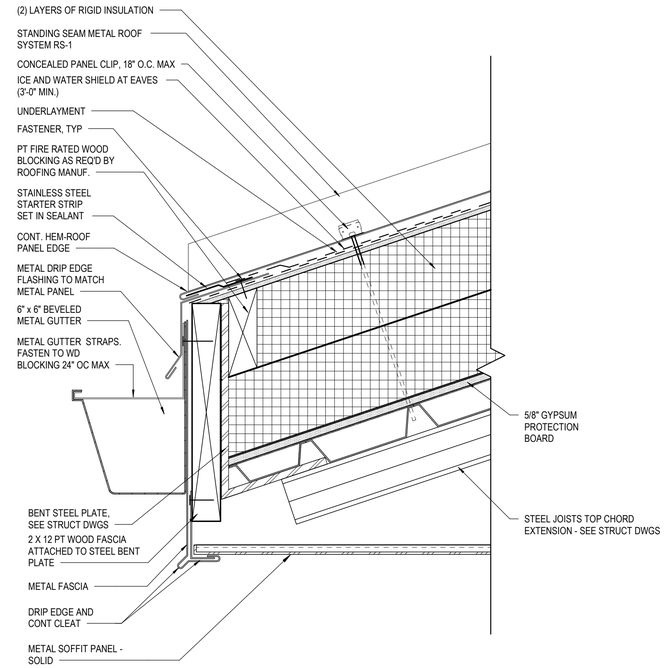

1 A-503 TYP. ROOF DETAIL AT GUTTER
SCALE: 3" = 1'-0"

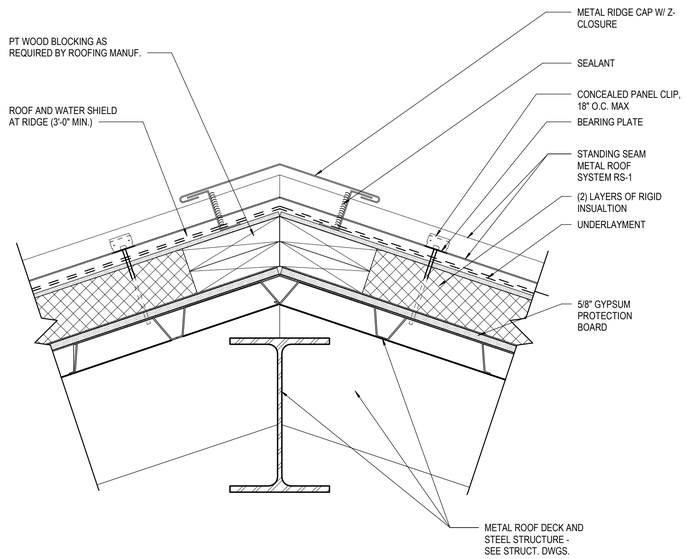

2 A-503 TYP. ROOF RIDGE DETAIL
SCALE: 3" = 1'-0"

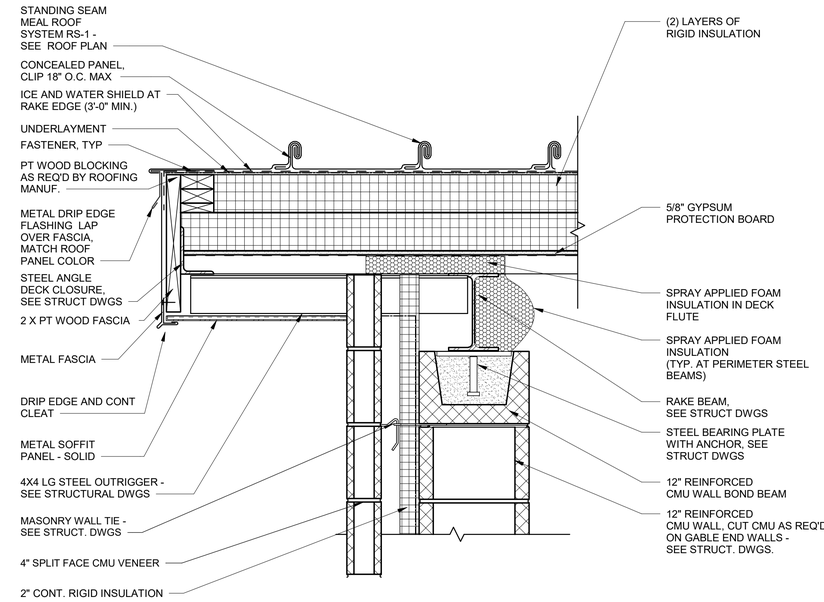

3 A-503 TYP. ROOF RAKE DETAIL
SCALE: 1 1/2" = 1'-0"

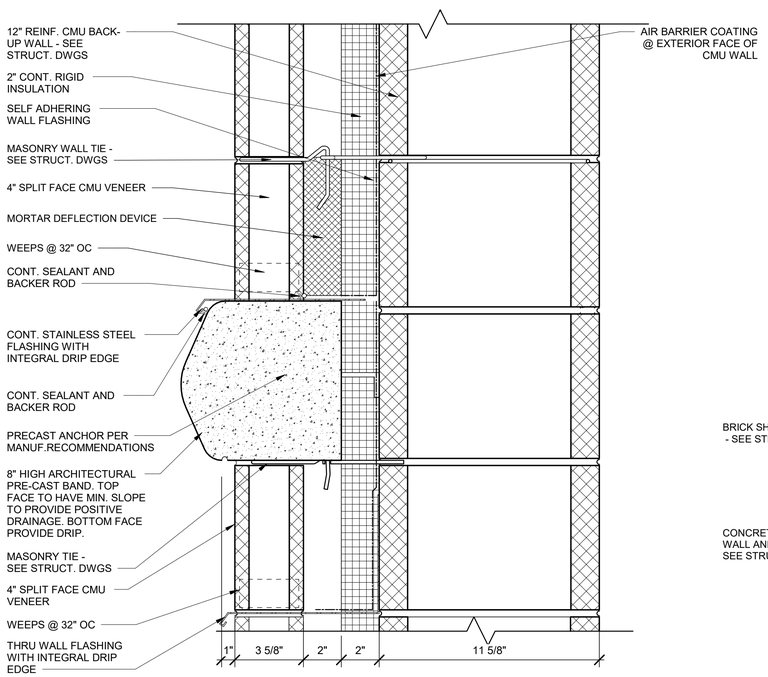

4 A-503 METAL PANEL TO MASONRY TRANSITION DETAIL
SCALE: 3" = 1'-0"

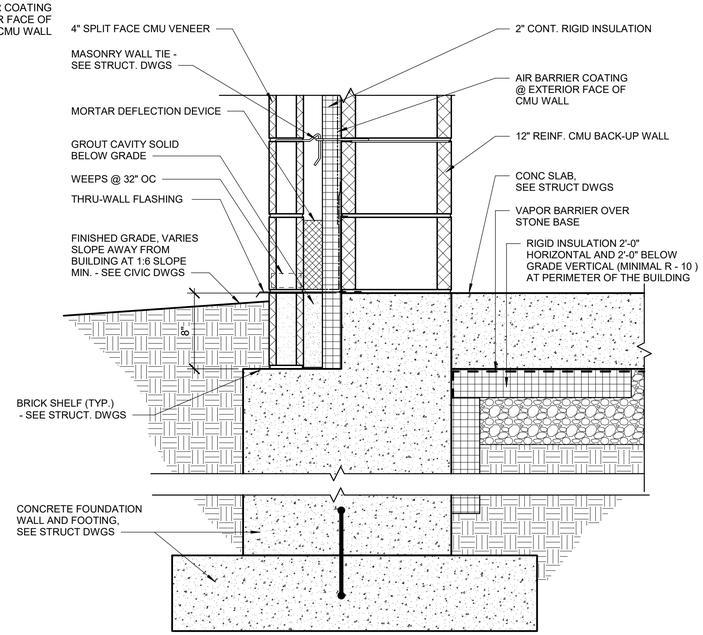

5 A-503 FOUNDATION DETAIL
SCALE: 1 1/2" = 1'-0"

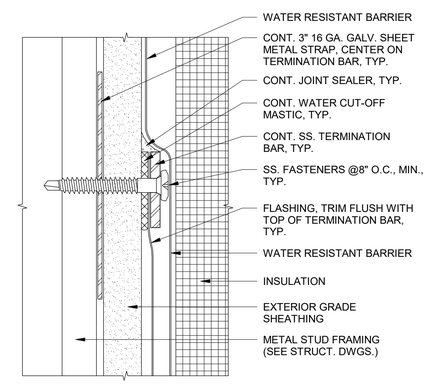

6 A-503 TERMINATION BAR
SCALE: 12" = 1'-0"

ISSUED FOR BID - FEBRUARY 2026

THIS DRAWING PRODUCED ON REVIT
DO NOT REVISE MANUALLY

"THIS DOCUMENT IS THE PROPERTY OF NAVAL FACILITIES ENGINEERING COMMAND, PREPARED BY TETRA TECH ENGINEERING CORPORATION PC, AND IS PROVIDED UPON THE CONDITION THAT IT WILL NOT BE REPRODUCED, COPIED, OR ISSUED TO A THIRD PARTY, AND WILL BE USED SOLELY FOR THE ORIGINAL INTENDED PURPOSE AND SOLELY FOR THE EXECUTION OR REVIEW OF THE ENGINEERING CONSTRUCTION OF THE PROJECT".

IT IS A VIOLATION OF THE NEW YORK STATE EDUCATION LAW, ARTICLE 145, FOR ANY PERSON, UNLESS UNDER THE DIRECTION OF A NEW YORK STATE LICENSED PROFESSIONAL ENGINEER, TO ALTER AN ITEM ON THIS DOCUMENT IN ANY WAY.

SYM	DESCRIPTION	DATE	APPR

NAVFAC

REGISTERED ARCHITECT JAMES QUINTIN BIRD 035335 STATE OF NEW YORK

3/24/26
SEAL

TETRA TECH
www.tetratech.com
4433 CORPORATION LANE, SUITE 300
VIRGINIA BEACH, VA 23462
PHONE: (757) 461-3768 FAX: (757) 461-4148
Alt. INFO

APPROVED
FOR COMMANDER NAVFAC 5/26/2026

ACTIVITY
As per document from Nicole Cowand, NAVFAC MIDLANT PLL/EV3.

SATISFACTORY TO DATE 3/24/26

DES	LD	DRW	MA	CHK	NS

PM/DM
BRANCH MANAGER
CHIEF ENG/ARCH
FIRE PROTECTION

DEPARTMENT OF THE NAVY
NAVAL FACILITIES ENGINEERING COMMAND
NAVAL FACILITIES ENGINEERING SYSTEMS COMMAND ~ MID-ATLANTIC
NAVAL INDUSTRIAL RESERVE ORDNANCE PLANT
NAVAL WEAPONS INDUSTRIAL RESERVE PLANT
BETHPAGE, NEW YORK
PHASE III - GROUNDWATER TREATMENT PLANT
ARCHITECTURAL DETAILS

SCALE: AS NOTED
EPROJECT NO.:
CONSTR. CONTR. NO. N62472-99-D-0032
NAVFAC DRAWING NO.
SHEET 17 OF 20
A-503

DRAWFORM REVISION: 25 AUGUST 2020

A-503
4/23/2026 2:16:30 PM
Autodesk Docs://T12308005-WE24 Navy- Bethpage NY-Phase III /A-112G98005_PHASEIII_GWTP_v2023.rvt

DOOR SCHEDULE - 1 FIRST FLOOR

NUMBER	TYPE	DOOR WIDTH	DOOR HEIGHT	DOOR THK	DOOR MAT	DOOR FIN	FRAME TYPE	FRAME MAT.	FRAME FIN.	DETAILS HEAD	DETAILS JAMB	DETAILS SILL	HARDWARE SET	COMMENTS
100A	F2	3' - 0"	7' - 0"	1 3/4"	FRP	PNT	F1	FRP	PNT	5/A-501	6/A-501	7/A-501	LOCKSET NO. 3	
100B	F	3' - 0"	7' - 0"	1 3/4"	FRP	PNT	F1	FRP	PNT	5/A-501	6/A-501	7/A-501	LOCKSET NO. 3	
100C	OH	14' - 0"	14' - 0"	2"	STEEL	PREFIN	-	STEEL	PREFIN	7/A-502	8/A-502	9/A-502		NOTE #7
100D	F	3' - 0"	7' - 0"	1 3/4"	FRP	PNT	F1	FRP	PNT	5/A-501	6/A-501	7/A-501	LOCKSET NO. 3	
100E	F	3' - 0"	7' - 0"	1 3/4"	FRP	PNT	F1	FRP	PNT	5/A-501	6/A-501	7/A-501	LOCKSET NO. 3	
101	F	3' - 0"	7' - 0"	1 3/4"	FRP	PNT	F1	FRP	PNT	8/A-501	9/A-501	10/A-501	LOCKSET NO. 6	FIRE RATED - 45 MIN.
103	F	3' - 0"	7' - 0"	1 3/4"	FRP	PNT	F1	FRP	PNT	8/A-501	9/A-501	10/A-501	LOCKSET NO. 7	
104	F	3' - 0"	7' - 0"	1 3/4"	FRP	PNT	F1	FRP	PNT	8/A-501	9/A-501	10/A-501	LOCKSET NO. 7	
105	F	3' - 0"	7' - 0"	1 3/4"	FRP	PNT	F1	FRP	PNT	8/A-501	9/A-501	10/A-501	LOCKSET NO. 5	
106A	F2	2' - 10"	7' - 0"	1 3/4"	FRP	PNT	F1	FRP	PNT	8/A-501	9/A-501	10/A-501	LOCKSET NO. 4	FIRE RATED - 45 MIN.
106B	F	3' - 0"	7' - 0"	1 3/4"	FRP	PNT	F1	FRP	PNT	6/A-501	7/A-501	8/A-501	LOCKSET NO. 6	
106C	F2	5' - 8"	7' - 0"	1 3/4"	FRP	PNT	F1	FRP	PNT	5/A-501	6/A-501	7/A-501	LOCKSET NO. 2	
107A	F	3' - 0"	7' - 0"	1 3/4"	FRP	PNT	F1	FRP	PNT	8/A-501	9/A-501	10/A-501	LOCKSET NO. 6	FIRE RATED - 45 MIN.
107B	F	3' - 0"	7' - 0"	1 3/4"	FRP	PNT	F1	FRP	PNT	5/A-501	6/A-501	7/A-501	LOCKSET NO. 3	
108A	F2	2' - 10"	7' - 0"	1 3/4"	FRP	PNT	F1	FRP	PNT	8/A-501	9/A-501	10/A-501	LOCKSET NO. 4	FIRE RATED - 90 MIN.
108B	F2	5' - 8"	7' - 0"	1 3/4"	FRP	PNT	F1	FRP	PNT	5/A-501	6/A-501	7/A-501	LOCKSET NO. 2	
109A	F2	2' - 10"	7' - 0"	1 3/4"	FRP	PNT	F1	FRP	PNT	8/A-501	9/A-501	10/A-501	LOCKSET NO. 4	
109B	F	3' - 0"	7' - 0"	1 3/4"	FRP	PNT	F1	FRP	PNT	5/A-501	6/A-501	7/A-501	LOCKSET NO. 3	
109C	OH	12' - 0"	8' - 0"	2"	STEEL	PREFIN	-	STEEL	PREFIN	7/A-502	8/A-502	9/A-502		NOTE #7
109D	OH	12' - 0"	8' - 0"	2"	STEEL	PREFIN	-	STEEL	PREFIN	7/A-502	8/A-502	9/A-502		NOTE #7
110A	F	3' - 0"	7' - 0"	1 3/4"	FRP	PNT	F1	FRP	PNT	8/A-501	9/A-501	10/A-501	LOCKSET NO. 5	FIRE RATED - 90 MIN.
110B	F	3' - 0"	7' - 0"	1 3/4"	FRP	PNT	F1	FRP	PNT	5/A-501	6/A-501	7/A-501	LOCKSET NO. 3	
111A	F	3' - 0"	7' - 0"	1 3/4"	FRP	PNT	F1	FRP	PNT	8/A-501	9/A-501	10/A-501	LOCKSET NO. 5	FIRE RATED - 90 MIN.
111B	F2	5' - 8"	7' - 0"	1 3/4"	FRP	PNT	F1	FRP	PNT	5/A-501	6/A-501	7/A-501	LOCKSET NO. 2	
112	F2	5' - 8"	7' - 0"	1 3/4"	FRP	PNT	F1	FRP	PNT	5/A-501	6/A-501	7/A-501	LOCKSET NO. 2	
113	F2	5' - 8"	7' - 0"	1 3/4"	FRP	PNT	F1	FRP	PNT	5/A-501	6/A-501	7/A-501	LOCKSET NO. 2	
114	F2	5' - 8"	7' - 0"	1 3/4"	FRP	PNT	F1	FRP	PNT	5/A-501	6/A-501	7/A-501	LOCKSET NO. 2	

DOOR AND WINDOW SCHEDULE ABBREVIATIONS:

ALUM	ALUMINUM	GLD	GLASS DOOR	MTL	METAL
ANOD	ANODIZED	GLS	GLASS BUTT-GLAZED SYSTEM	PTD	PAINT(ED)
EF	EXISTING FRAME	HM	HOLLOW METAL	SS	STAINLESS STEEL
FRP	INSULATED FIBERGLASS/FRP	IGL	IMPACT RESISTANT GLAZING	STL	STEEL
FF	FACTORY FINISH	IN	INSULATED	STN	STAIN(ED)
FGL	FIRE RESISTANT GLAZING	LAM	LAMINATED	TEMP	TEMPERED
TP	TRANSLUSCENT PANEL			WD	WOOD

DOORS, FRAMES, AND HARDWARE NOTES

1. HANDLES, PULLS, LATCHES, LOCKS, AND OTHER OPERABLE PARTS ON ACCESSIBLE DOORS SHALL HAVE A SHAPE THAT IS EASY TO GRASP WITH ONE HAND AND DOES NOT REQUIRE TIGHT GRASPING, PINCHING OR TWISTING OF THE WRIST TO OPERATE. (ANSI A117.1-2009 SECTION 404.2.6)
2. DOOR CLOSERS SHALL BE ADJUSTED SO THAT FROM AN OPEN POSITION OF 90 DEGREES, THE TIME REQUIRED TO MOVE THE DOOR TO AN OPEN POSITION OF 12 DEGREES SHALL BE 5 SECONDS MINIMUM. (ANSI A117.1-2009 SECTION 404.2.7.1)
3. ALL INTERIOR HINGED DOORS, OTHER THAN FIRE DOORS, SHALL HAVE 5.0 POUNDS MAXIMUM FORCE FOR PUSHING OR PULLING OPEN. (ANSI A117.1-2009 SECTION 404.2.8)
4. IF DOOR THRESHOLDS ARE PROVIDED THEY SHALL BE 1/2" MAXIMUM HEIGHT. RAISED THRESHOLDS AND CHANGES IN LEVELS AT DOORWAYS SHALL COMPLY WITH ANSI A117.1-2009 SECTIONS 302 AND 303)
5. ALL WIRING CONDUIT IDENTIFIED ON THE DRAWINGS, OR REQUIRED FOR THE INSTALLATION OF ELECTRONIC COMPONENTS, THAT IS WITHIN HOLLOW METAL FRAMES SHALL BE PROVIDED AS PART OF THE HOLLOW METAL FRAME, WITH TERMINATIONS APPROPRIATE FOR EXTENSION BY OTHER TRADES.
6. ALL GLASS IN DOORS, HOLLOW METAL FRAMES, AND STOREFRONT FRAMES WILL BE TEMPERED GLASS UNLESS NOTED OTHERWISE IN SCHEDULES.
7. EXTERIOR COILING OVERHEAD DOOR, MOTOR OPERATED. PROVIDE MANUFACTURER'S STD WEATHERSTRIPPING AT PERIMETER AND BOTTOM EDGE.

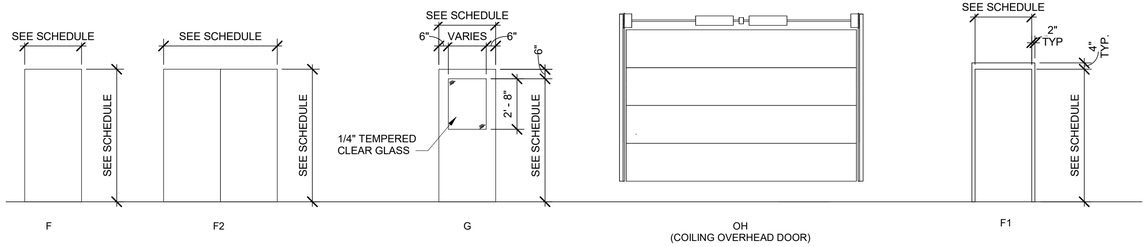

DOOR TYPES

SCALE: 1/4" = 1'-0"

FRAME TYPES

SCALE: 1/4" = 1'-0"

WINDOW & LOUVER SCHEDULE

MARK	R.O. WIDTH	R.O. HEIGHT	FRAME FINISH	FRAME MATERIAL	GLAZING TYPE	GLAZING THICKNESS	DETAILS HEAD	DETAILS JAMB	DETAILS SILL	COMMENTS
L1	1' - 1"	1' - 1"	PNT	STL	-	-	4/A-502	5/A-502	6/A-502	COORDINATE WITH MECHANICAL EQUIPMENT
L2	2' - 6"	2' - 0"	PNT	STL	-	-	4/A-502	5/A-502	6/A-502	COORDINATE WITH MECHANICAL EQUIPMENT
L3	1' - 8"	1' - 8"	PNT	STL	-	-	4/A-502	5/A-502	6/A-502	COORDINATE WITH MECHANICAL EQUIPMENT
L4	1' - 6"	1' - 0"	PNT	STL	-	-	4/A-502	5/A-502	6/A-502	COORDINATE WITH MECHANICAL EQUIPMENT
L5	1' - 3"	1' - 3"	PNT	STL	-	-	4/A-502	5/A-502	6/A-502	COORDINATE WITH MECHANICAL EQUIPMENT
L6	2' - 0"	1' - 6"	PNT	STL	-	-	4/A-502	5/A-502	6/A-502	COORDINATE WITH MECHANICAL EQUIPMENT
W1	10' - 0"	5' - 4"	PREFINISHED	FRP	GL-1	1/4"	1/A-502	2/A-502	3/A-502	
W3	2' - 8"	4' - 0"	PREFINISHED	FRP	GL-1	1/4"	1/A-601	2/A-601	3/A-601	
W4	6' - 0"	4' - 0"	PREFINISHED	FRP	GL-1	1/4"	1/A-601	2/A-601	3/A-601	1 HR. FIRE RATED

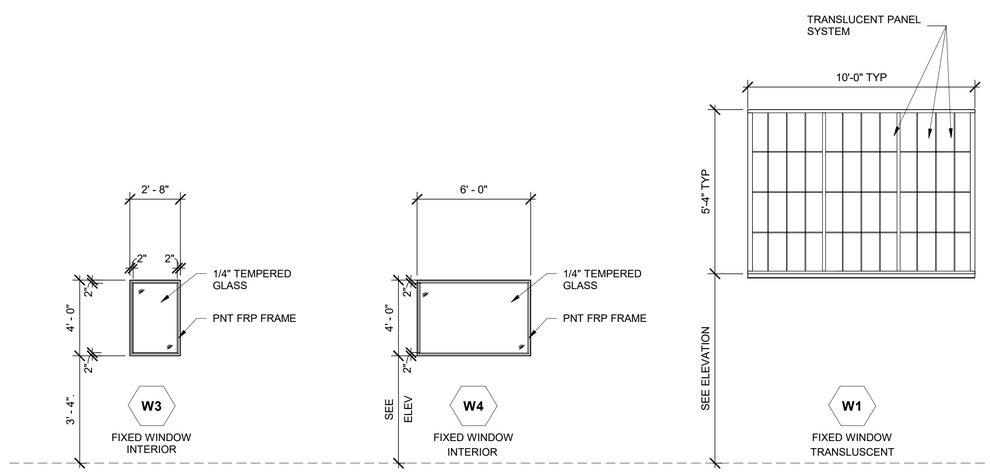

WINDOW ELEVATIONS

SCALE: 1/4" = 1'-0"

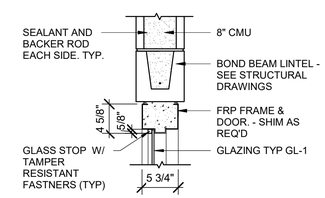

1 A-601 WINDOW HEAD AT INT. CMU

SCALE: 1" = 1'-0"

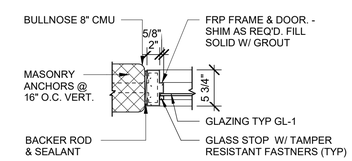

2 A-601 WINDOW JAMB AT INT. CMU

SCALE: 1" = 1'-0"

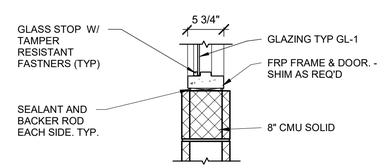

3 A-601 WINDOW SILL AT INT. CMU

SCALE: 1" = 1'-0"

ISSUED FOR BID - FEBRUARY 2026

THIS DRAWING PRODUCED ON REVIT DO NOT REVISE MANUALLY

"THIS DOCUMENT IS THE PROPERTY OF NAVAL FACILITIES ENGINEERING COMMAND, PREPARED BY TETRA TECH ENGINEERING CORPORATION PC, AND IS PROVIDED UPON THE CONDITION THAT IT WILL NOT BE REPRODUCED, COPIED, OR ISSUED TO A THIRD PARTY, AND WILL BE USED SOLELY FOR THE ORIGINAL INTENDED PURPOSE AND SOLELY FOR THE EXECUTION OR REVIEW OF THE ENGINEERING CONSTRUCTION OF THE PROJECT".

IT IS A VIOLATION OF THE NEW YORK STATE EDUCATION LAW, ARTICLE 145, FOR ANY PERSON, UNLESS UNDER THE DIRECTION OF A NEW YORK STATE LICENSED PROFESSIONAL ENGINEER, TO ALTER AN ITEM ON THIS DOCUMENT IN ANY WAY.

SYM	DESCRIPTION	DATE	APPR

NAVFAC

REGISTERED ARCHITECT JAMES QUINTIN BIRD 035335 STATE OF NEW YORK

3/24/26

SEAL

TETRA TECH
www.tetratech.com
4433 CORPORATION LANE, SUITE 300
VIRGINIA BEACH, VA 23462
PHONE: (757) 461-3788 FAX: (757) 461-4148
Ad. INFO

APPROVED

FOR COMMANDER NAVFAC 5/26/2026

AS NOTED

As per document from Nicole Cowand, NAVFAC MIDLANT PLL/EV3.

SATISFACTORY TO DATE 3/24/26

DES LD DRW MA CHK NS

PM/DM

BRANCH MANAGER

CHIEF ENG/ARCH

FIRE PROTECTION

DEPARTMENT OF THE NAVY
NAVAL FACILITIES ENGINEERING COMMAND
NAVAL FACILITIES ENGINEERING SYSTEMS COMMAND ~ MID-ATLANTIC
NAVAL INDUSTRIAL RESERVE ORDNANCE PLANT
NAVAL WEAPONS INDUSTRIAL RESERVE PLANT
BETHPAGE, NEW YORK
PHASE III - GROUNDWATER TREATMENT PLANT
DOOR AND WINDOW SCHEDULES WITH FRAME TYPES AND ELEVATIONS

SCALE: AS NOTED

EPROJECT NO.:

CONSTR. CONTR. NO. N62472-99-D-0032

NAVFAC DRAWING NO.

SHEET 18 OF 20

A-601

DRAWFORM REVISION: 25 AUGUST 2020

A-601
4/23/2026 2:16:33 PM
Autodesk Docs://112G0600S-WE2 Navy- Bethpage NY-Phase III /A-112G0600S_PHASEIII_GWTP_v2023.rvt

NOTIFICATION: THIS PAGE CONTAINS SENSITIVE BUT UNCLASSIFIED INFORMATION WHICH IS PROTECTED BY THE FREEDOM OF INFORMATION ACT

EXEMPTION 3. (5 USC 552(b)(3))

Information exempted by other statutes

10 USC Section 130(e) Treatment of Certain Critical Infrastructure Security Information

Pages -

TO REQUEST A COPY OF THE DOCUMENT PLEASE CONTACT

Department of the Navy
Freedom of Information Act Office

http://www.secnav.navy.mil/foia/Pages/default.aspx

CASEWORK SCHEDULE

TYPE	QTY	DESCRIPTION	WIDTH	HEIGHT	DEPTH	FINISH	COMMENTS
	4	COUNTERTOP		3'-0"	2'-1"		LENGTH AND TYPE VARIES
B1	2	BASE: DOUBLE DOOR	2'-0"	2'-8 1/2"	2'-0"	PLAM	
B3	1	BASE: DOUBLE DOOR SINK	2'-6"	2'-8 1/2"	2'-0"	PLAM	
B4	3	BASE: DOUBLE DOOR	2'-6"	2'-8 1/2"	2'-0"	PLAM	
B5	1	BASE: DOUBLE DOOR	3'-6"	2'-8 1/2"	2'-0"	PLAM	
W1	2	UPPER: DOUBLE DOOR	2'-0"	2'-6"	1'-0"	PLAM	
W4	4	UPPER: DOUBLE DOOR	2'-6"	2'-6"	1'-0"	PLAM	

KEYNOTES

25 UTILITY SINK

57 INTERIOR 3-5/8" METAL STUD PARTITION WALL; 48" HEIGHT; FINISHED WITH 5/8" GYPSUM BOARD ON ALL SIDES

58 WOOD CAP FOR TOP OF INTERIOR HALF HEIGHT WALL

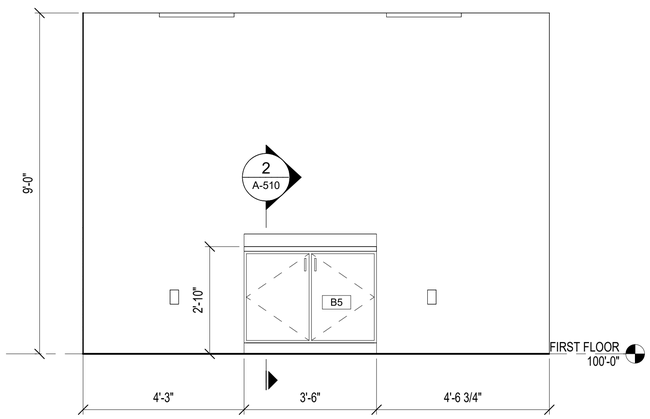

5 A-411 CONFERENCE ELEVATION
SCALE: 1/2" = 1'-0"

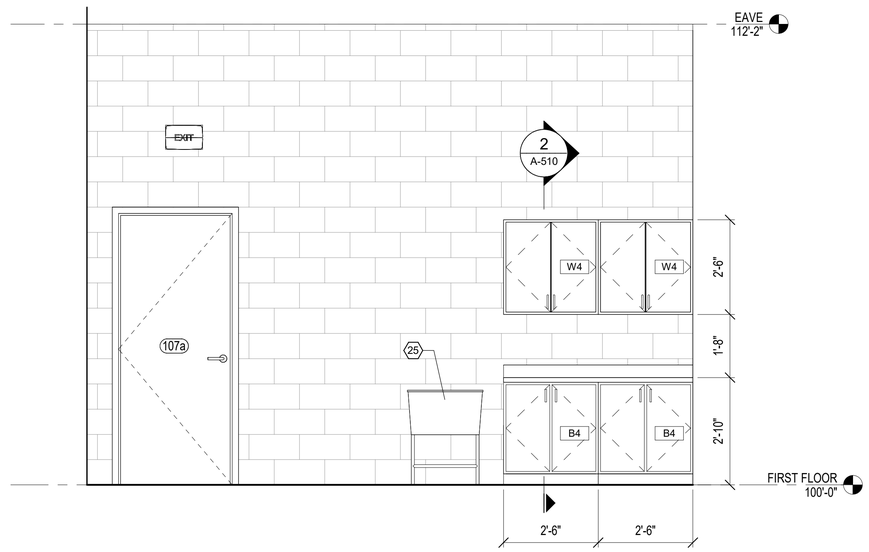

4 A-411 STORAGE ELEVATION
SCALE: 1/2" = 1'-0"

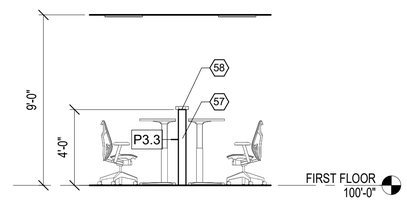

6 A-411 HALF HEIGHT WALL DETAIL
SCALE: 1/4" = 1'-0"

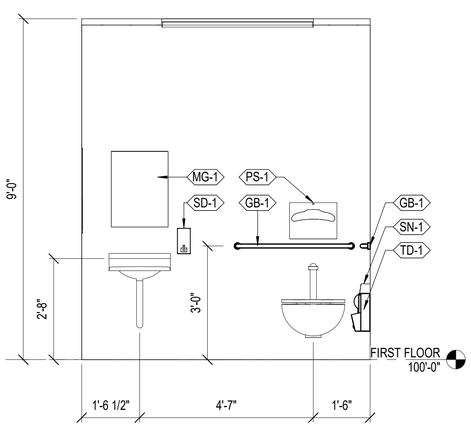

3 A-411 RESTROOM ELELVATION
SCALE: 1/2" = 1'-0"

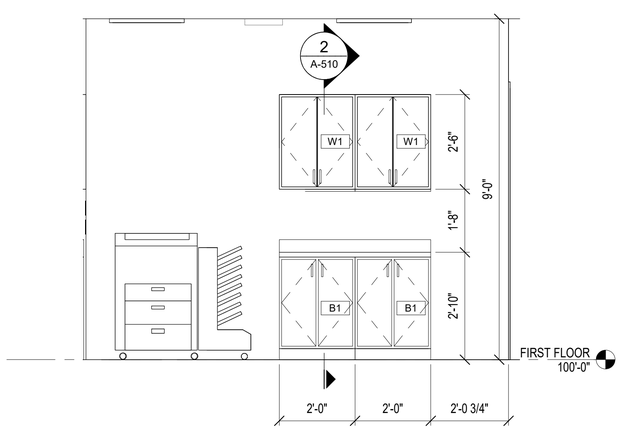

2 A-411 PRINTER STATION ELEVATION
SCALE: 1/2" = 1'-0"

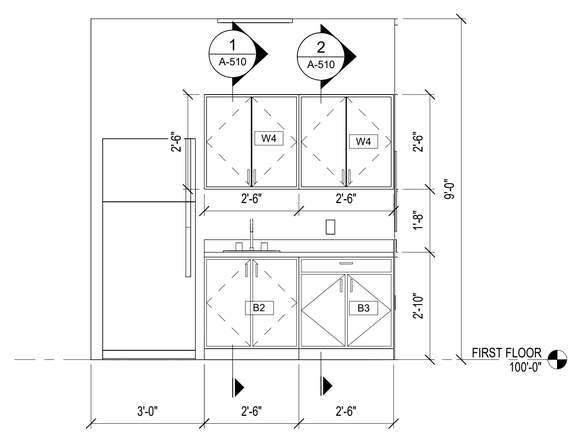

1 A-411 BREAK ELEVATION
SCALE: 1/2" = 1'-0"

0 2' 4' 8'
SCALE: 1/4" = 1'-0"

0 1' 2' 4'
SCALE: 1/2" = 1'-0"

ISSUED FOR BID - FEBRUARY 2026

THIS DRAWING PRODUCED ON REVIT
DO NOT REVISE MANUALLY

"THIS DOCUMENT IS THE PROPERTY OF NAVAL FACILITIES ENGINEERING COMMAND, PREPARED BY TETRA TECH ENGINEERING CORPORATION PC, AND IS PROVIDED UPON THE CONDITION THAT IT WILL NOT BE REPRODUCED, COPIED, OR ISSUED TO A THIRD PARTY, AND WILL BE USED SOLELY FOR THE ORIGINAL INTENDED PURPOSE AND SOLELY FOR THE EXECUTION OR REVIEW OF THE ENGINEERING CONSTRUCTION OF THE PROJECT".

IT IS A VIOLATION OF THE NEW YORK STATE EDUCATION LAW, ARTICLE 145, FOR ANY PERSON, UNLESS UNDER THE DIRECTION OF A NEW YORK STATE LICENSED PROFESSIONAL ENGINEER, TO ALTER AN ITEM ON THIS DOCUMENT IN ANY WAY.

SYM	DESCRIPTION	DATE	APPR

NAVFAC

REGISTERED ARCHITECT JAMES QUINTIN BIRD 035335 STATE OF NEW YORK
3/24/26
SEAL

TETRA TECH
www.tetratech.com
4433 CORPORATION LANE, SUITE 300
VIRGINIA BEACH, VA 23462
PHONE: (757) 461-3768 FAX: (757) 461-4148

APPROVED
FOR COMMANDER NAVFAC 5/26/2026

ACTIVITY
As per document from Nicole Cowand, NAVFAC MIDLANT PLL/EV3.

SATISFACTORY TO DATE 3/24/26
DES LD DRW MA CHK NS
PMDM
BRANCH MANAGER
CHIEF ENG/ARCH
FIRE PROTECTION

DEPARTMENT OF THE NAVY
NAVAL FACILITIES ENGINEERING COMMAND
NAVAL FACILITIES ENGINEERING SYSTEMS COMMAND ~ MID-ATLANTIC
GWTP PHASE III
NAVAL INDUSTRIAL RESERVE ORDNANCE PLANT
NAVAL WEAPONS INDUSTRIAL RESERVE PLANT
BETHPAGE, NEW YORK
PHASE III - GROUNDWATER TREATMENT PLANT
OFFICE BUILDING
INTERIOR ELEVATIONS

SCALE: AS NOTED
EPROJECT NO.: #####
CONSTR. CONTR. NO. N62472-99-D-0032
NAVFAC DRAWING NO.
SHEET 15 OF 45
A-411

DRAWFORM REVISION: 25 AUGUST 2020

4/23/2026 2:12:47 PM A-411
Autodesk Docs://T12508005-WE24 Navy- Bethpage NY-Phase III /T12508005-WE24_Phase III_OFFICE_A_v2023.rvt

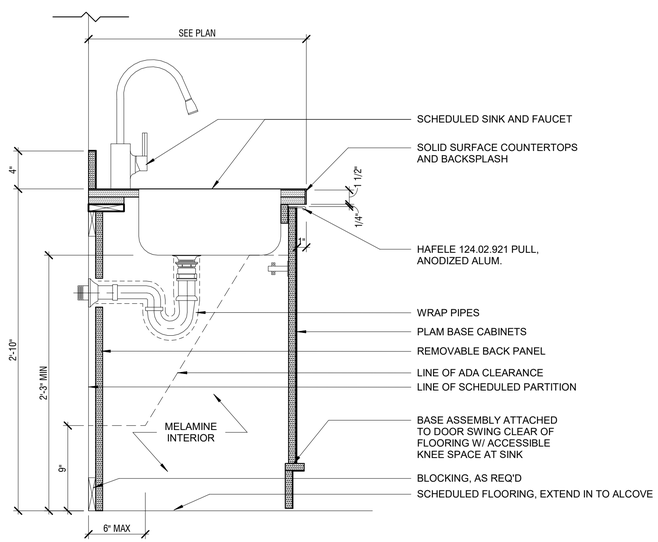

1 / A-510 BASE CABINET - ADA SINK W/ SQUARE EDGE COUNTERTOP

SCALE: 1 1/2" = 1'-0"

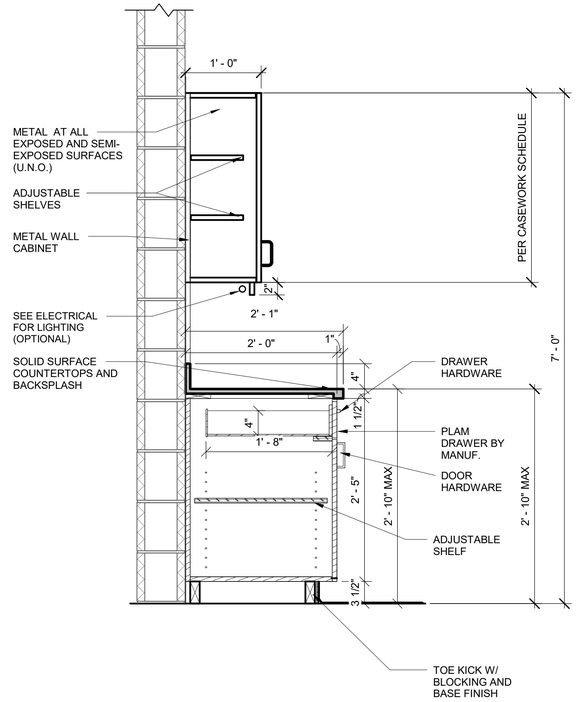

2 / A-510 SECTION @ WALL CABINET

SCALE: 1" = 1'-0"

0 2" 4" 8"
SCALE: 3" = 1'-0"

0 4" 8" 1'-4"
SCALE: 1 1/2" = 1'-0"

0 1/2' 1' 2'
SCALE: 1" = 1'-0"

0 8" 1'-4" 2'-8"
SCALE: 3/4" = 1'-0"

ISSUED FOR BID - FEBRUARY 2026

THIS DRAWING PRODUCED ON REVIT
DO NOT REVISE MANUALLY

"THIS DOCUMENT IS THE PROPERTY OF NAVAL FACILITIES ENGINEERING COMMAND, PREPARED BY TETRA TECH ENGINEERING CORPORATION PC, AND IS PROVIDED UPON THE CONDITION THAT IT WILL NOT BE REPRODUCED, COPIED, OR ISSUED TO A THIRD PARTY, AND WILL BE USED SOLELY FOR THE ORIGINAL INTENDED PURPOSE AND SOLELY FOR THE EXECUTION OR REVIEW OF THE ENGINEERING CONSTRUCTION OF THE PROJECT".

IT IS A VIOLATION OF THE NEW YORK STATE EDUCATION LAW, ARTICLE 145, FOR ANY PERSON, UNLESS UNDER THE DIRECTION OF A NEW YORK STATE LICENSED PROFESSIONAL ENGINEER, TO ALTER AN ITEM ON THIS DOCUMENT IN ANY WAY.

SYM	DESCRIPTION	DATE	APPR

NAVFAC

REGISTERED ARCHITECT JAMES QUINTIN MAGO 035335 STATE OF NEW YORK

3/24/26

SEAL

TETRA TECH
www.tetratech.com
4433 CORPORATION LANE, SUITE 300
VIRGINIA BEACH, VA 23462
PHONE: (757) 461-3788 FAX: (757) 461-4148
AE INFO

APPROVED
FOR COMMANDER NAVFAC 5/26/2026

ACTIVITY: As per document from Nicole Coward, NAVFAC MIDLANT PLL/EV3.

SATISFACTORY TO DATE 3/24/26

DES LD | DRW MA | CHK NS

PM/DM

BRANCH MANAGER

CHIEF ENG/ARCH

FIRE PROTECTION

DEPARTMENT OF THE NAVY
NAVAL FACILITIES ENGINEERING SYSTEMS COMMAND ~ MID-ATLANTIC
NAVAL INDUSTRIAL RESERVE ORDNANCE PLANT
GWTP PHASE III
NAVAL FACILITIES ENGINEERING COMMAND
NAVAL INDUSTRIAL RESERVE PLANT
BETHPAGE, NEW YORK
PHASE III - GROUNDWATER TREATMENT PLANT
OFFICE BUILDING
INTERIOR DETAILS

SCALE: AS NOTED

EPROJECT NO.: #####

CONSTR. CONTR. NO. N62472-99-D-0032

NAVFAC DRAWING NO.

SHEET 29 OF 45

A-510

DRAWFORM REVISION: 25 AUGUST 2020

A-510
4/23/2026 2:12:47 PM
Autodesk Docs://TG308005-WE24 Navy- Bethpage NY-Phase III /112G08005-WE24_PhaseIII_OFFICE_A_v2023.rvt

DOOR SCHEDULE

# NO.	TYPE	DOOR MATERIAL	DOOR SIZE WIDTH	DOOR SIZE HEIGHT	DOOR SIZE THICKNESS	FRAME TYPE	FRAME MATERIAL	DETAILS HEAD	DETAILS JAMB	DETAILS SILL	HARDWARE SET	COMMENTS
101	G	FRP	3'-0"	7'-0"	1 3/4"	1	H.M.	9/AE601	8/AE601	7/AE601	LOCKSET NO. 3	
102	G	FRP	3'-0"	7'-0"	1 3/4"	1	H.M.	9/AE601	8/AE601	7/AE601	LOCKSET NO. 3	
103	F	FRP	3'-0"	7'-2"	1 3/4"	1	H.M.	6/AE601	5/AE601	4/AE601	LOCKSET NO. 7	
104	F	FRP	3'-0"	7'-2"	1 3/4"	1	H.M.	6/AE601	5/AE601	4/AE601	LOCKSET NO. 6	
105	F	FRP	3'-0"	7'-2"	1 3/4"	1	H.M.	6/AE601	5/AE601	4/AE601	LOCKSET NO. 5	
106	F	FRP	3'-0"	7'-2"	1 3/4"	1	H.M.	6/AE601	5/AE601	4/AE601	LOCKSET NO. 6	
107a	F	FRP	3'-0"	7'-2"	1 3/4"	1	H.M.	6/AE601	5/AE601	4/AE601	LOCKSET NO. 5	FIRE RATED - 45 MIN.
107b	G	FRP	3'-0"	7'-0"	1 3/4"	1	H.M.	9/AE601	8/AE601	7/AE601	LOCKSET NO. 3	
107c	OH	STEEL	12'-0"	8'-0"	2"		STEEL	PER	MANUF.	SPECS		NOTE #7
108	F	FRP	3'-0"	7'-0"	1 3/4"	1	H.M.	6/AE601	5/AE601	4/AE601	LOCKSET NO. 5	

WINDOW SCHEDULE

W# MARK	R.O. WIDTH	R.O. HEIGHT	FRAME MATERIAL	GLAZING TYPE	DETAILS SILL	DETAILS JAMB	DETAILS HEAD	COMMENTS
W1	6'-0"	4'-0"	HM	GL1	1/AE601	2/AE601	3/AE601	
W4	1'-4"	1'-4"	STL	-	4/A-502	5/A-502	6/A-502	COORDINATE WITH MECHANICAL EQUIPMENT

GLAZING SCHEDULE

TYPE	DESCRIPTION
GL1	1" INSULATING GLASS UNIT (1/4" CLEAR TEMPERED, 1/2" AIRSPACE, 1/4" CLEAR TEMPERED)
GL2	1" INSULATING GLASS UNIT (1/4" FROSTED TEMPERED, 1/2" AIRSPACE, 1/4" CLEAR TEMPERED)

DOOR AND WINDOW SCHEDULE ABBREVIATIONS:

ALUM	ALUMINUM	GLD	GLASS DOOR	MTL	METAL
ANOD	ANODIZED	GLS	GLASS BUTT-GLAZED SYSTEM	PTD	PAINT(ED)
EF	EXISTING FRAME	HM	HOLLOW METAL	SS	STAINLESS STEEL
FRP	INSULATED FIBERGLASS/FRP	IGL	IMPACT RESISTANT GLAZING	STL	STEEL
FF	FACTORY FINISH	IN	INSULATED	STN	STAIN(ED)
FGL	FIRE RESISTANT GLAZING	LAM	LAMINATED	TEMP	TEMPERED
				WD	WOOD
TP	TRANSLUSCENT PANEL				

DOORS, FRAMES, AND HARDWARE NOTES

1. HANDLES, PULLS, LATCHES, LOCKS, AND OTHER OPERABLE PARTS ON ACCESSIBLE DOORS SHALL HAVE A SHAPE THAT IS EASY TO GRASP WITH ONE HAND AND DOES NOT REQUIRE TIGHT GRASPING, PINCHING OR TWISTING OF THE WRIST TO OPERATE. (ANSI A117.1-2009 SECTION 404.2.6)
2. DOOR CLOSERS SHALL BE ADJUSTED SO THAT FROM AN OPEN POSITION OF 90 DEGREES, THE TIME REQUIRED TO MOVE THE DOOR TO AN OPEN POSITION OF 12 DEGREES SHALL BE 5 SECONDS MINIMUM. (ANSI A117.1-2009 SECTION 404.2.7.1)
3. ALL INTERIOR HINGED DOORS, OTHER THAN FIRE DOORS, SHALL HAVE 5.0 POUNDS MAXIMUM FORCE FOR PUSHING OR PULLING OPEN. (ANSI A117.1-2009 SECTION 404.2.8)
4. IF DOOR THRESHOLDS ARE PROVIDED THEY SHALL BE 1/2" MAXIMUM HEIGHT. RAISED THRESHOLDS AND CHANGES IN LEVELS AT DOORWAYS SHALL COMPLY WITH ANSI A117.1-2009 SECTIONS 302 AND 303)
5. ALL WIRING CONDUIT IDENTIFIED ON THE DRAWINGS, OR REQUIRED FOR THE INSTALLATION OF ELECTRONIC COMPONENTS, THAT IS WITHIN HOLLOW METAL FRAMES SHALL BE PROVIDED AS PART OF THE HOLLOW METAL FRAME, WITH TERMINATIONS APPROPRIATE FOR EXTENSION BY OTHER TRADES.
6. ALL GLASS IN DOORS, HOLLOW METAL FRAMES, AND STOREFRONT FRAMES WILL BE TEMPERED GLASS UNLESS NOTED OTHERWISE IN SCHEDULES.
7. EXTERIOR COILING OVERHEAD DOOR, MOTOR OPERATED. PROVIDE MANUFACTURER'S STD WEATHERSTRIPPING AT PERIMETER AND BOTTOM EDGE.

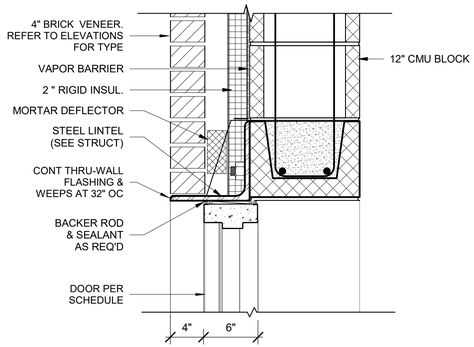

9 / A-610 TYP. EXT. DOOR HEAD DETAIL
SCALE: 1 1/2" = 1'-0"

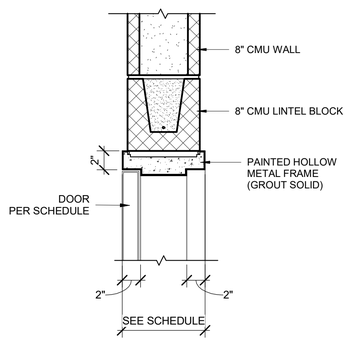

6 / A-610 TYP. INT. DOOR HEAD DETAIL
SCALE: 1 1/2" = 1'-0"

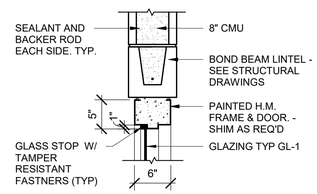

3 / A-610 WINDOW HEAD AT INT. CMU
SCALE: 1" = 1'-0"

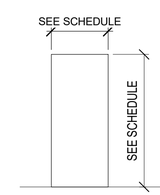

F

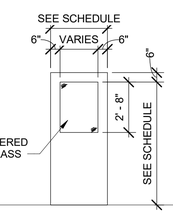

G

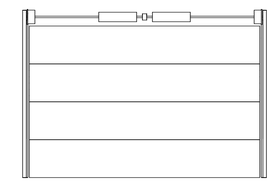

OH
(COILING OVERHEAD HEADER)

DOOR TYPES
SCALE: 1/4" = 1'-0"

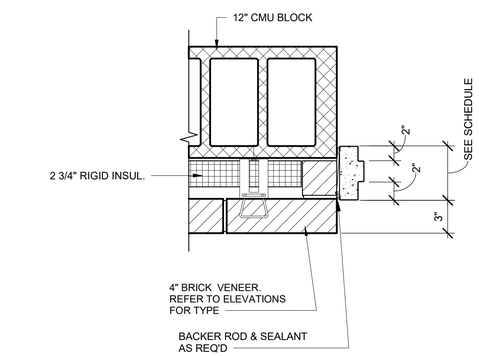

8 / A-610 TYP. EXT. DOOR JAMB DETAIL
SCALE: 1 1/2" = 1'-0"

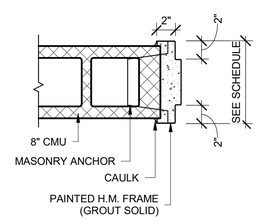

5 / A-610 TYP. INT. JAMB DETAIL
SCALE: 1 1/2" = 1'-0"

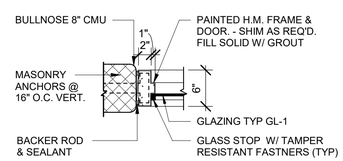

2 / A-610 WINDOW JAMB AT INT. CMU
SCALE: 1" = 1'-0"

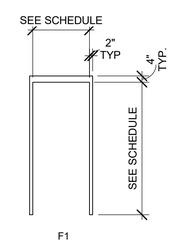

F1

FRAME TYPES
SCALE: 1/4" = 1'-0"

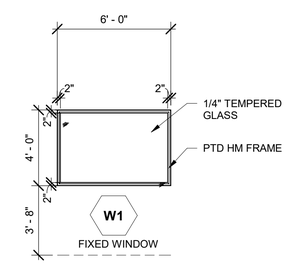

WINDOW TYPES
SCALE: 1/4" = 1'-0"

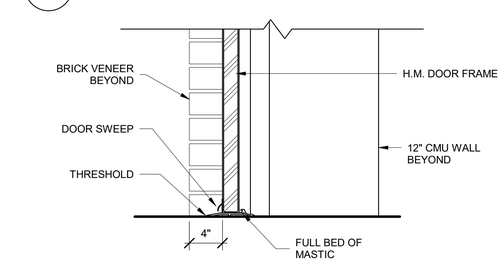

7 / A-610 TYP. EXT. DOOR SILL DETAIL
SCALE: 1 1/2" = 1'-0"

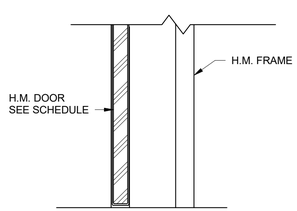

4 / A-610 TYP. INT. DOOR SILL DETAIL
SCALE: 1 1/2" = 1'-0"

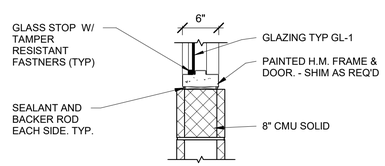

1 / A-610 WINDOW SILL AT INT. CMU
SCALE: 1" = 1'-0"

ISSUED FOR BID - FEBRUARY 2026

THIS DRAWING PRODUCED ON REVIT
DO NOT REVISE MANUALLY

"THIS DOCUMENT IS THE PROPERTY OF NAVAL FACILITIES ENGINEERING COMMAND, PREPARED BY TETRA TECH ENGINEERING CORPORATION PC, AND IS PROVIDED UPON THE CONDITION THAT IT WILL NOT BE REPRODUCED, COPIED, OR ISSUED TO A THIRD PARTY, AND WILL BE USED SOLELY FOR THE ORIGINAL INTENDED PURPOSE AND SOLELY FOR THE EXECUTION OR REVIEW OF THE ENGINEERING CONSTRUCTION OF THE PROJECT".

IT IS A VIOLATION OF THE NEW YORK STATE EDUCATION LAW, ARTICLE 145, FOR ANY PERSON, UNLESS UNDER THE DIRECTION OF A NEW YORK STATE LICENSED PROFESSIONAL ENGINEER, TO ALTER AN ITEM ON THIS DOCUMENT IN ANY WAY.

SYM	DESCRIPTION	DATE	APPR

NAVFAC

REGISTERED ARCHITECT JOHN QUINTIN BURD 035335 STATE OF NEW YORK
3/24/26
SEAL

TETRA TECH
www.tetratech.com
4433 CORPORATION LANE, SUITE 300
VIRGINIA BEACH, VA 23462
PHONE: (757) 461-3788 FAX: (757) 461-4148
A/E INFO

APPROVED
FOR COMMANDER NAVFAC 5/26/2026
ACTIVITY
AS per document from Nicole Cowand, NAVFAC MIDLANT PLL/EV3.
SATISFACTORY TO DATE 3/24/26
DES LD DRW MA CHK NS
PM/DM
BRANCH MANAGER
CHIEF ENG/ARCH
FIRE PROTECTION

DEPARTMENT OF THE NAVY
NAVAL FACILITIES ENGINEERING COMMAND ~ MID-ATLANTIC
GWTP PHASE III
NAVAL FACILITIES ENGINEERING SYSTEMS COMMAND
NAVAL INDUSTRIAL RESERVE ORDNANCE PLANT
BETHPAGE, NEW YORK
NAVAL WEAPONS INDUSTRIAL RESERVE PLANT
PHASE III - GROUNDWATER TREATMENT PLANT
OFFICE BUILDING
DOOR SCHEDULE AND DETAILS

SCALE: AS NOTED
EPROJECT NO.: #####
CONSTR. CONTR. NO. N62472-99-D-0032
NAVFAC DRAWING NO.
SHEET 31 OF 45
A-610

DRAWFORM REVISION: 25 AUGUST 2020

4/23/2026 2:12:49 PM A-610
Autodesk Docs://112G0800S-WE24 Navy- Bethpage NY-Phase III /112G0800S-WE24_PhaseIII_OFFICE_A_v2023.rvt

NOTIFICATION: THIS PAGE CONTAINS SENSITIVE BUT UNCLASSIFIED INFORMATION WHICH IS PROTECTED BY THE FREEDOM OF INFORMATION ACT

EXEMPTION 3. (5 USC 552(b)(3))

Information exempted by other statutes

10 USC Section 130(e) Treatment of Certain Critical Infrastructure Security Information

Page 4

TO REQUEST A COPY OF THE DOCUMENT PLEASE CONTACT

Department of the Navy
Freedom of Information Act Office

http://www.secnav.navy.mil/foia/Pages/default.aspx

STRUCTURAL GENERAL NOTES

1. THESE GENERAL NOTES PRESENT AND/OR SUMMARIZE KEY PROJECT INFORMATION FOR THE DRAWING READER'S CONVENIENCE. SEE ALSO INDIVIDUAL DRAWING NOTES AND PROJECT SPECIFICATIONS FOR FURTHER DETAILS AND REQUIREMENTS.
2. ALL REFERENCES TO REFERENCE STANDARDS HEREIN ARE TO MOST RECENT ISSUE IN EFFECT AS OF THE DATE OF THESE DOCUMENTS, UNLESS NOTED OTHERWISE IN PROJECT SPECIFICATIONS OR ON THE DRAWING
3. ALL ELEVATIONS FOR THE GWTP STRUCTURE ARE REFERENCED TO FIRST FLOOR EL. 100'-0" = 47.00'. ALL ELEVATIONS FOR THE OFFICE BUILDING ARE REFERENCED TO FIRST FLOOR EL. 100'-0" = 46.50' ELEVATIONS SHOWN ON DRAWINGS ARE REFERENCED TO THIS DATUM UNLESS NOTED OTHERWISE.
4. DIMENSIONS MARKED WITH AN "*" SHALL BE DETERMINED BY EQUIPMENT MANUFACTURER AND COORDINATED BY CONTRACTOR
5. SUBMIT SHOP DRAWINGS, PROJECT DATA AND SAMPLES AS SPECIFIED IN PROJECT SPECIFICATIONS.
6. ABBREVIATIONS

ADD'L	ADDITIONAL	FLR	FLOOR	PREFAB	PREFABRICATED
ARCH.	ARCHITECT(URAL)	FRMG	FRAMING	PSF	POUNDS PER SQUARE FOOT
BLDG.	BUILDING	FRP	FIBER REINFORCED PLASTICS	PSI	POUNDS PER SQUARE INCH
BOT.	BOTTOM	FT	FOOT	QTY	QUANTITY
C.I.P.	CAST-IN-PLACE	FTG	FOOTING	RAD.	RADIUS
C/C	CENTER TO CENTER	GA	GAGE, GAUGE	RD	ROOF DRAIN
CCJ	CRACK CONTROL JOINT	GALV	GALVANIZED	REF	REFERENCE
CFS	COLD FORMED STEEL	GR.	GRADE	REINF.	REINFORCEMENT
CJ	CONSTRUCTION JOINT	GWTP	GROUNDWATER TREATMENT PLANT	REQ	REQUIRE
CL	CENTER LINE			REQ'D	REQUIRED
CLR	CLEAR	H.R.	HAND RAIL	REV	REVISION
CMU	CONCRETE MASONRY UNIT	HK	HOOK	RO	ROUGH OPENING
COL	COLUMN	HORIZ	HORIZONTAL	SCHED	SCHEDULE
CONC	CONCRETE	HT	HEIGHT	SF	SQUARE FOOT
CONST	CONSTRUCTION	I.D.	INSIDE DIAMETER	SHT.	SHEET
CONT	CONTINUOUS	I.F.	INSIDE FACE	SIM.	SIMILAR
COORD	COORDINATE	I.J.	ISOLATION JOINT	SPA.	SPACE
DGA	DENSE GRADED AGGREGATE	IN.	INCH	SPEC	SPECIFICATIONS
DIA	DIAMETER	INT	INTERIOR	SQ	SQUARE
DIM	DIMENSION	LBS	POUNDS	SS	STAINLESS STEEL
DIST	DISTANCE	LF	LINEAR FOOT (FEET)	STD	STANDARD
DTL	DETAIL	LLV	LONG LEG VERTICAL	STL	STEEL
DWG(S)	DRAWING(S)	MATL	MATERIAL	STL JST	STEEL JOIST
DWL	DOWEL	MAX	MAXIMUM	STRUCT	STRUCTURE(AL)
E.F.	EACH FACE	MECH	MECHANICAL	T.O.C.	TOP OF CONCRETE
EA	EACH	MFR	MANUFACTURER	T/	TOP OF
EJ	EXPANSION JOINT	MIN	MINIMUM, MINUTE	TEMP	TEMPORARY
EL / ELEV.	ELEVATION	MISC.	MISCELLANEOUS	THK	THCKNESS
ELEC	ELECTRIC(AL)	N.S.	NEAR SIDE	TOF	TOP OF FOOTING
ENGR	ENGINEER	N.T.S.	NOT TO SCALE	TOS	TOP OF SLAB
EQ	EQUAL	NA	NOT APPLICABLE	TRANSV.	TRANSVERE
EQUIP	EQUIPMENT	NO	NUMBER	TYP	TYPICAL
EW	EACH WAY	NOM	NOMINAL	UNO	UNLESS NOTED OTHERWISE
EXIST	EXISTING	O.C.	ON CENTER	V.I.F.	VERIFY IN FIELD
FD	FLOOR DRAIN	O.D.	OUTSIDE DIAMETER	VERT	VERTICAL
FDN	FOUNDATION	OPNG	OPENING	W/	WITH
FFE	FINISH FLOOR ELEVATION	PLF	POUNDS PER LINEAR FOOT	W/O	WITHOUT
FLG.	FLANGE	PRCST	PRECAST	WS	WATER STOP.
				WWF	WELDED WIRE FABRIC

FOUNDATIONS

1. SEE GEOTECHNICAL/SUBSURFACE INVESTIGATION MEMO BY TETRA TECH, DATED JANUARY 16, 2024
IT SHALL BE THE CONTRACTOR'S RESPONSIBILITY TO DETERMINE WHETHER OR NOT ADDITIONAL GEOTECHNICAL INFORMATION IS REQUIRED AND TO PROVIDE SUCH INFORMATION AS THE CONTRACTOR DEEMS NECESSARY AT NO ADDITIONAL COST TO OWNER.
2. ALLOWABLE BEARING PRESSURES AS FOLLOWS:

   CONTINUOUS WALL FOUNDATIONS = 4000 PSF
   ISOLATED COLUMN FOUNDATIONS = 4000 PSF
   MAT SLAB = 4000 PSF
   SLAB ON GRADE = 4000 PSF
   SUBGRADE MODULUS = 175 PCI
3. GEOTECHNICAL ENGINEER SHALL BE RETAINED BY OWNER TO PROVIDE OBSERVATION AND TESTING SERVICES DURING THE GRADING AND FOUNDATION PHASE OF CONSTRUCTION. INSPECTION AND TESTING REPORTS SHALL BE SUBMITTED TO THE STRUCTURAL ENGINEER.
4. PRIOR TO PLACING ENGINEERED FILL, THE SITE SHALL BE STRIPPED AND PROOF ROLLED. ANY SOFT SPOTS ENCOUNTERED SHALL BE REMOVED AND REPLACED WITH ENGINEERED FILL. REFER TO EXCAVATION AND FILL SPECIFICATION FOR ADDITIONAL INFORMATION.
5. THERE SHALL BE NO BACKFILLING OPERATIONS UNTIL THE CONCRETE WALLS HAVE REACHED 75% OF THEIR SPECIFIED 28 DAY DESIGN STRENGTH, UNLESS NOTED OTHERWISE OR APPROVED BY THE ENGINEER.

OPEN WEB STEEL JOISTS

1. REFERENCES:
   a. SJI STANDARD SPECIFICATIONS, LOAD TABLES AND WEIGHT TABLES FOR STEEL JOISTS AND STEEL GIRDERS.
2. CONCENTRATED LOADS:
   a. ATTACHMENT IN SUCH MANNER OR AT SUCH LOCATION THAT LOCAL BENDING IS NOT INTRODUCED INTO THE CHORDS EXCEPT AS NOTED.
3. SEE DETAIL 13 / S-503 FOR ROOF JOIST SEAT DEPTH AT HIGH AND LOW ENDS.
4. JOISTS TO BE WELDED OR BOLTED TO SUPPORTS. .
5. PROVIDE BRIDGING IN ACCORDANCE WITH SJI STANDARDS UNLESS NOTED OTHERWISE. DO NOT HANG CEILING AND DUCTWORK FROM BRIDGING.
6. SHOP DRAWINGS SHALL BEAR THE ORIGINAL SIGNATURE AND SEAL OF A PROFESSIONAL ENGINEER REGISTERED IN THE STATE WHERE JOISTS WILL BE INSTALLED.
7. WIND LOADS USED TO DESIGN ROOF JOISTS SHALL BE COMPONENTS AND CLADDING PRESSURES. SEE SCHEDULE OR CALCULATED PER ASCE 7-16.
8. WIND LOADS USED TO DESIGN ROOF JOIST SUPPORT CONNECTIONS SHALL BE MAIN WIND FORCE RESISTING SYSTEM PRESSURES CALCULATED PER ASCE 7-16.

DESIGN CRITERIA - GWTP & OFFICE BUILDING

1. REFERENCES:
   1. ICC INTERNATIONAL BUILDING CODE, 2021 EDITION
      RISK CATEGORY III IN ACCORDANCE WITH TABLE 1604.5
   2. STATE BUILDING CODE: 2020 NEW YORK STATE BUILDING CODE
   3. ASCE/SEI 7-16 - MINIMUM DESIGN LOADS FOR BUILDINGS AND OTHER STRUCTURES
   4. UNITED FACILITY CRITERIA (UFC) 3-301-01: STRUCTURAL ENGINEERING, WITH CAHNGE 2, DATED 4 SEPTEMBER 2024 RISK CATEGORY III IN ACCORDANCE WITH TABLE 2-2.
   5. UNITED FACILITY CRITERIA (UFC) 4-010-01: DoD MINIMUM ANTITERRORISM STANDARDS FOR BUILDINGS, WITH CHANGE 1, DATED 19 AUGUST 2020
2. DEAD LOADS:

ROOF DEAD LOAD	= (SELF WEIGHT) OR 8 PSF
ROOF COLLATERAL* LOAD	= 8 PSF
AVAILABLE TO RESIST UPLIFT	= SELF WEIGHT OF STRUCTURAL FRAMING ONLY
FLOOR DEAD LOAD	= SELF WEIGHT

   * COLLATERAL LOAD INCLUDES PROVISION FOR HANGING LOADS INCLUDING SPRINKLERS, DUCTWORK, PLUMBING, CEILING AND OTHER COMPONENTS. REFER TO DRAWINGS FOR CONCENTRATED LOADING..

3. LIVE LOADS (U.N.O.):

TYPICAL GROUND FLOORS (LIGHT STORAGE)	= 125 PSF
MEZZANINE FLOOR	= 200 PSF
ROOF	= 20 PSF
VEHICULAR LIVE LOAD	= 16,000 LBS. WHEEL LOAD (LARGE CAPACITY PNEUMATIC TIRE FORKLIFT)

4. FROST DEPTH = 48"
5. ROOF SNOW LOAD:

GROUND SNOW LOAD, Pg	= 30 PSF
FLAT ROOF SNOW LOAD, Pf	= 22.5 PSF
SNOW EXPOSURE FACTOR, Ce	= 1.00
SNOW LOAD IMPORTANCE FACTOR, I	= 1.0
THERMAL FACTOR, Ct	= 1.17

UNBALANCED SNOW LOAD - GWTP BUILDING

WINDWARD SNOW LOAD	= 6.8 PSF
LEEWARD SNOW LOAD	
FROM RIDGE TO 10'-8" FROM RIDGE	= 46.3 PSF
10'-8" FROM RIDGE TO EAVE	= 22.5 PSF

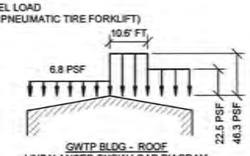

GWTP BLDG - ROOF
UNBALANCED SNOW LOAD DIAGRAM

UNBALANCED SNOW LOAD - OFFICE BUILDING

WINDWARD SNOW LOAD	= 6.8 PSF
LEEWARD SNOW LOAD	
FROM RIDGE TO 7.0' FROM RIDGE	= 38.1 PSF
7.0' FROM RIDGE TO EAVE	= 22.5 PSF

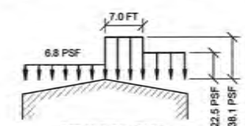

OFFICE BLDG - ROOF
UNBALANCED SNOW LOAD DIAGRAM

6. WIND LOAD:

ULTIMATE DESIGN WIND SPEED, Vult	= 129 MPH
NOMINAL DESIGN WIND SPEED, Vasd	= 99.9 (Vult*√0.6) MPH
RISK CATEGORY	= III
WIND EXPOSURE CATEGORY	= B
DIRECTIONALITY FACTOR, Kd	= 0.85
TOPOGRAPHY	= 1.0
INTERNAL PRESSURE COEFFICIENT, GCpi	= ± 0.18
BUILDING ENCLOSURE CLASSIFICATION	= ENCLOSED

FOR COMPONENTS & CLADDING PRESSURES, REFER TO THIS SHEET.

7. SEISMIC DESIGN DATA:

RISK CATEGORY	= III
SEISMIC IMPORTANCE FACTOR, Ie	= 1.25
SDS	= 0.180
SD1	= 0.066
SS	= 0.240
S1	= 0.047
SITE CLASS	= 'D'
SEISMIC DESIGN CATEGORY	= 'B'
RESPONSE MODIFICATION FACTOR, R	= 2
BASIC SEISMIC FORCE RESISTING SYSTEM	= ORDINARY REINFORCED MASONRY SHEAR WALLS
SEISMIC RESPONSE COEFFICIENT, Cs	= 0.113
ANALYSIS PROCEDURE:	= EQUIVALENT LATERAL FORCE

PER THE REQUIREMENTS OF UFC 4-010-01, DATED 24 MAY 2024, HARDENING OF THE BUILDING STRUCTURE IS NOT REQUIRED, INCLUDING AROUND GLAZED WINDOWS AND DOORS, AS EXISTING BUILDING B1901 IS CONSIDERED A LOW OCCUPANCY BUILDING, AND IS THEREFORE EXEMPT FROM ALL PROVISIONS OF THE STANDARDS.

STRUCTURAL STEEL

1. REFERENCES:
   a. AISC STEEL CONSTRUCTION MANUAL, 16TH EDITION
   b. AWS D1.1 STRUCTURAL WELDING CODE - STEEL
2. MATERIALS:
   a. GRADE STEEL
      WIDE FLANGES.....ASTM A992, GRADE 50
      CHANNELS, ANGLES, AND PLATES.....ASTM A36
      SHEAR CONNECTOR PLATES.....ASTM A572, GRADE 50
      SQUARE OR RECTANGLE HSS.....ASTM A500, GRADE C, Fy=50 KSI
   b. WELDED STUDS: ASTM A108, GRADE 60
   c. ANCHOR BOLTS: ASTM F1554, GRADE 55, WELDABLE.
   d. STRUCTURAL BOLTS: ASTM A325-N
   e. WELDS: E70XX ELECTRODES
3. CONNECTIONS
   a. AISC MANUAL STANDARD CONNECTIONS UNLESS NOTED. HIGH-STRENGTH BOLTS: ASTM A325-N, 3/4" UNLESS NOTED OTHERWISE. BEARING TYPE INSTALLED IN CONFORMANCE WITH "SPECIFICATIONS FOR STRUCTURAL JOINTS USING ASTM A325 OR A490 BOLTS", RESEARCH COUNCIL ON RIVETED AND BOLTED STRUCTURAL JOINTS. UNLESS NOTED OTHERWISE, STANDARD AISC "USUAL GAGE" DIMENSIONS SHALL BE USED FOR LOCATING HOLES FOR BOLTS, EXPANSION ANCHORS, ETC. IN ALL ANGLES, BEAM FLANGES, ETC.
   b. THE ASSEMBLY SURFACE, INCLUDING THOSE ADJACENT TO THE WASHER, SHALL BE FREE OF MILL SCALE, OIL, PAINT OR OTHER COATINGS.
   c. ALL HIGH STRENGTH BOLTS SHALL BE TIGHTENED TO A BOLT TENSION NOT LESS THAN THAT SPECIFIED IN THE AISC MANUAL. COMPRESSIBLE-WASHER-TYPE DIRECT TENSION INDICATORS OR TWIST-OFF-TYPE TENSION-CONTROL BOLTS MUST BE USED AT ALL HIGH STRENGTH BOLT CONNECTIONS. PROVIDE HARDENED WASHERS UNDER THE NUT OR BOLT HEAD, WHICHEVER IS THE ELEMENT TURNED IN TIGHTENING.
   d. WELDING - PERFORM ALL WELDING IN ACCORDANCE WITH AWS D1.1 CODE, LATEST EDITION, WELDS SHALL BE MADE ONLY BY OPERATORS CERTIFIED BY AWS IN PERFORMING THE TYPE OF WORK INDICATED.
   e. ALL BEAMS SHALL HAVE SIMPLE SHEAR CONNECTIONS DESIGNED TO SUPPORT 1/2 THE TOTAL UNIFORM LOAD LISTED IN THE AISC MANUAL OF STEEL CONSTRUCTION OR THE REACTION NOTED ON THE DRAWINGS, WHICHEVER IS GREATER.
   f. WHERE INDICATED ON THE DRAWINGS, CONNECTIONS SHALL BE DESIGNED FOR THE REACTIONS SHOWN. WHERE NO REACTIONS ARE INDICATED, REFER TO NOTE "E" ABOVE OR DESIGN FOR A MINIMUM REACTION OF 10 KIPS.

STRUCTURAL STEEL

4. TOLERANCES: AISC CODE OF STANDARD PRACTICE (LATEST EDITION)
5. CAMBER: PROVIDE POSITIVE CAMBER AS NOTED ON DRAWINGS. WHERE NO CAMBER IS NOTED, RESIDUAL MILL CAMBER IS TO BE UPWARDS.
6. SHOP DRAWINGS
   a. SUBMIT ERECTION AND FABRICATION SHOP DRAWINGS. SEE SPECS.
   b. SUBMIT ERECTION PROCEDURES AND TEMPORARY BRACING PLAN FOR A/E REVIEW.
7. ALL EXPOSED ANGLE AND PLATE LINTELS FOR BLOCK/BRICK SUPPORT SHALL BE G90 HOT DIPPED GALVANIZED.
8. PAINTING: AFTER MATERIAL HAS BEEN PROPERLY CLEANED AND TREATED, APPLY SHOP PRIME COAT TO ALL SURFACES, EXCEPT THOSE INTENDED FOR EMBEDMENT INTO CONCRETE OR TO RECEIVE FIELD WELDING OR SLIP CRITICAL BOLTS.

COMPONENT AND CLADDING WIND PRESSURES

FACTORED (ULTIMATE) COMPONENTS & CLADDING WIND PRESSURES (PSF) - GWTP BUILDING

ROOF ZONES	EFFECTIVE TRIBUTARY AREA*		
	10 SF	100 SF	200 SF
NEGATIVE ZONE 1 & 2e	-55.3	-17.3	-17.3
NEGATIVE ZONE 2n, 2r, &3e	-80.7	-44.4	-33.5
NEGATIVE ZONE 3r	-95.9	-50.2	-50.2
POSITIVE ALL ZONES	18.2	16.0	16.0
OVERHANG ZONE 1 & 2e	-63.4	-38.1	-38.1
OVERHANG ZONE 2n & 2r	-80.6	-61.6	-53.4
OVERHANG ZONE 3e	-104.0	-56.8	-42.6
OVERHANG ZONE 3r	-119.2	-58.3	-58.3

WALL ZONES	EFFECTIVE TRIBUTARY AREA*		
	10 SF	100 SF	500 SF
NEGATIVE ZONE 4	-32.5	-28.0	-24.9
NEGATIVE ZONE 5	-40.1	-31.1	-24.9
POSITIVE ZONE 4 & 5	29.9	25.5	22.3

NOTES:

1. EDGE DISTANCE: 'a' = 8'-0"
2. * EFFECTIVE TRIBUTARY AREA: SPAN LENGTH MULTIPLIED BY AN EFFECTIVE WIDTH THAT NEED NOT BE LESS THAN 1/3 THE SPAN LENGTH
3. NEGATIVE VALUE DENOTES PRESSURE ACTING AWAY FROM THE SURFACE
4. UNFACTORED (NOMINAL) COMPONENTS AND CLADDING PRESSURES MAY BE OBTAINED BY MULTIPLYING THE VALUES IN THE TABLE BY 0.60

FACTORED (ULTIMATE) COMPONENTS & CLADDING WIND PRESSURES (PSF) - OFFICE BLDG

ROOF ZONES	EFFECTIVE TRIBUTARY AREA*		
	10 SF	100 SF	200 SF
NEGATIVE ZONE 1 & 2e	-45.4	-16.0	-16.0
NEGATIVE ZONE 2n, 2r, &3e	-66.2	-36.4	-24.6
NEGATIVE ZONE 3r	-78.7	-41.2	-41.2
POSITIVE ALL ZONES	16	16	16
OVERHANG ZONE 1 & 2e	-52.0	-31.2	-31.2
OVERHANG ZONE 2n & 2r	-72.8	-50.5	-41.6
OVERHANG ZONE 3e	-85.3	-46.6	-31.2
OVERHANG ZONE 3r	-97.8	-47.9	-47.9

WALL ZONES	EFFECTIVE TRIBUTARY AREA*		
	10 SF	100 SF	500 SF
NEGATIVE ZONE 4	-26.6	-23.0	-20.4
NEGATIVE ZONE 5	-32.9	-25.5	-20.4
POSITIVE ZONE 4 & 5	24.6	20.9	18.3

NOTES:

1. EDGE DISTANCE: 'a' = 3'-0"
2. * EFFECTIVE TRIBUTARY AREA: SPAN LENGTH MULTIPLIED BY AN EFFECTIVE WIDTH THAT NEED NOT BE LESS THAN 1/3 THE SPAN LENGTH
3. NEGATIVE VALUE DENOTES PRESSURE ACTING AWAY FROM THE SURFACE
4. UNFACTORED (NOMINAL) COMPONENTS AND CLADDING PRESSURES MAY BE OBTAINED BY MULTIPLYING THE VALUES IN THE TABLE BY 0.60

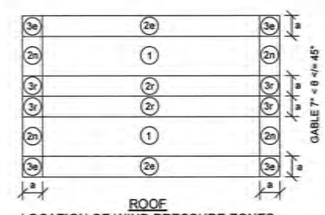

ROOF
LOCATION OF WIND PRESSURE ZONES

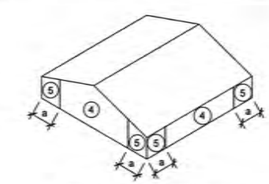

ENCLOSED BUILDING WALLS

STEEL DECK

1. REFERENCES:
   a. SDI DESIGN MANUAL FOR COMPOSITE DECKS, FORM DECKS, AND ROOF DECKS
   b. SDI DIAPHRAGM DESIGN MANUAL
2. MATERIAL: A653 GRADE A (50,000 PSI MIN.), GALVANIZED (G90).
3. INSTALLATION:
   a. WHERE POSSIBLE, EXTEND OVER 3 OR MORE SUPPORTS. DECK ATTACHMENTS SHALL BE IN ACCORDANCE WITH SDI SPECS UNLESS NOTED OTHERWISE AND SHALL BE ADEQUATELY SHOWN ON SHOP DRAWING SUBMITTAL.
   b. PROVIDE POUR STOPS AS REQUIRED.

BIDDING INFORMATION: IF THE MORE RECENT UFC 3-301-01, WITH CHANGE 6, DATED 30 JANUARY 2026, IS REQUIRED BY THE CLIENT TO BE THE GOVERNING CODE, STRUCTURAL DESIGN WILL BE REQUIRED TO BE UPDATED TO REFERENCE ASCE 7-22. THIS CHANGE WILL MOST NOTABLY DOUBLE GROUND SNOW LOAD VALUES, INCREASE WIND PRESSURES, AND ALTER VARIOUS OTHER FACTORS OF DESIGN. IF IMPLEMENTED BY THE CLIENT, REVISED STRUCTURAL DOCUMENTS WILL BE PROVIDED AT A FUTURE DATE WITH UPDATED STRUCTURAL INFORMATION.

ISSUED FOR BID - FEBRUARY 2026

THIS DRAWING PRODUCED ON REVIT
DO NOT REVISE MANUALLY

"THIS DOCUMENT IS THE PROPERTY OF NAVAL FACILITIES ENGINEERING CORPORATION PC, AND IS PROVIDED UPON THE CONDITION THAT IT WILL NOT BE REPRODUCED, COPIED, OR ISSUED TO A THIRD PARTY, AND WILL BE USED SOLELY FOR THE ORIGINAL INTENDED PURPOSE AND SOLELY FOR THE EXECUTION OR REVIEW OF THE ENGINEERING CONSTRUCTION OF THE PROJECT".

IT IS A VIOLATION OF THE NEW YORK STATE EDUCATION LAW, ARTICLE 145, FOR ANY PERSON, UNLESS UNDER THE DIRECTION OF A NEW YORK STATE LICENSED PROFESSIONAL ENGINEER, TO ALTER AN ITEM ON THIS DOCUMENT IN ANY WAY.

SYM	DESCRIPTION	DATE	APPR

NAVFAC

STATE OF NEW YORK — ADAM T. CARTER — 085893-1 — REGISTERED PROFESSIONAL ENGINEER
04/21/2026 SEAL

TETRA TECH
www.tetratech.com
5700 LAKE WRIGHT DR., SUITE 100
NORFOLK, VA 23502
PHONE: (757) 461-2750 FAX: (757) 461-4149

A/E INFO

APPROVED
TOM CONWAKER NAVFAC
ACTIVITY
As per document from Nicole Coward, NAVFAC MIDLANT PL/TCO
SATISFACTORY TO DATE 03/24/2026
DES JAT DRW BRF CHK ATC
PM/DM
BRANCH MANAGER
CHIEF ENG/ARCH
FIRE PROTECTION

DEPARTMENT OF THE NAVY
NAVAL FACILITIES ENGINEERING SYSTEMS COMMAND
NAVAL FACILITIES ENGINEERING COMMAND – MID-ATLANTIC
NAVAL INDUSTRIAL RESERVE ORDNANCE PLANT
FEC: 108
NAVAL WEAPONS INDUSTRIAL RESERVE PLANT BETHPAGE, NEW YORK
BETHPAGE NY PHASE III
GROUNDWATER TREATMENT PLANT
STRUCTURAL GENERAL NOTES I

SCALE: AS NOTED
EPROJECT NO.:
CONSTR. CONTR. NO. N62472-99-D-0032
NAVFAC DRAWING NO. 112GO8005
SHEET S-001 OF

STRUCTURAL CONCRETE

1. REFERENCES:

   a. ACI 318-19 BUILDING CODE REQUIREMENTS FOR STRUCTURAL CONCRETE
   b. ACI 350-20 CODE REQUIREMENTS FOR ENVIRONMENTAL ENGINEERING CONCRETE STRUCTURES
   c. ACI SP-66 ACI DETAILING MANUAL
   d. ACI 301-10 SPECIFICATION FOR STRUCTURAL CONCRETE
   e. ACI 117-10 SPECIFICATION FOR TOLERANCES FOR CONCRETE CONSTRUCTION AND MATERIALS
   f. CRSI MSP-2-01 MANUAL OF STANDARD PRACTICE
   g. CRSI REINFORCING BAR DETAILING
   h. CRSI PLACING REINFORCING BARS

2. MATERIALS

   a. STRUCTURAL CONCRETE
      i. MINIMUM COMPRESSIVE STRENGTH AT 28 DAYS (f'c)
         FOOTINGS, PIERS, FOUNDATION WALLS, SLABS-ON-GROUND — SEE SPECIFICATIONS
         ELEVATED SLABS — SEE SPECIFICATIONS
      ii. SEE SPECIFICATION SECTION 03 30 00 FOR ALL CONCRETE EXPOSURE CATEGORIES AND ASSOCIATED REQUIREMENTS. TYP
      iii. ALL CONCRETE EXPOSED TO THE ELEMENTS SHALL BE AIR-ENTRAINED IN ACCORDANCE WITH ASTM C260. SEE SPECIFICATIONS.
      iv. ALL CONCRETE IN 8" WALLS OR COLUMNS WITH TWO PLANES OF REINFORCEMENT SHALL HAVE MAXIMUM 3/4" AGGREGATE. IT IS RECOMMENDED THAT THE CONTRACTOR CONSIDER SUPER-PLASTICIZED CONCRETE PER SPECIFICATIONS.
      v. ALL CONCRETE AGGREGATE SHALL COMPLY WITH ASTM C33 (NORMAL WEIGHT).

   b. REINFORCEMENT
      i. REINFORCING BARS: ASTM A615, GRADE 60

   c. ANCHOR RODS
      i. SHALL BE GALVANIZED, FURNISHED WITH CHAMFERED ENDS, AND SHALL MEET STRENGTH AND DUCTILITY REQUIREMENTS EQUIVALENT ASTM F1554, GR 55 WELDABLE MATERIAL.
      ii. CONTRACTOR MUST ENSURE ANCHORS DO NOT CONFLICT WITH CONCRETE WALL REINFORCING

   d. MECHANICAL (TORQUE-CONTROLLED) ANCHORS
      i. APPROVED SYSTEMS INCLUDE HILTI KWIK BOLT TZ (ICC ESR 1917) OR HILTI KWIK HUS-EZ (ICC ESR 3027) OR EQUAL CONSIDERING LOAD RESISTANCE. MECHANICAL ANCHORS SHALL BE APPROVED FOR USE WITH CRACKED CONCRETE PER AC 193. CURRENT ICC-ESR SHALL BE SUBMITTED. ALL PERSONNEL INSTALLING ANCHORS SHALL BE TRAINED BY THE MANUFACTURER ON PROPER INSTALLATION TECHNIQUE. TRAINING DOCUMENTATION FROM THE MANUFACTURER SHALL BE AVAILABLE ON REQUEST
      ii. CONTRACTOR MUST ENSURE ANCHORS DO NOT CONFLICT WITH CONCRETE WALL REINFORCING

   e. ADHESIVE ANCHORS
      i. APPROVED SYSTEMS INCLUDE HILTI HIT-RE 500 V3 (ICC ESR 3814) OR HILTI HIT-HY 200 ADHESIVE WITH HIT-V/ HAS THREADED ANCHORS WITH SAFESET TECHNOLOGY (ICC ESR 3187) OR EQUAL CONSIDERING LOAD RESISTANCE, IN-SERVICE AND INSTALLATION TEMPERATURE, AVAILABILITY OR COMPREHENSIVE INSTALLATION INSTRUCTIONS, AND CREEP. ADHESIVE ANCHORS SHALL BE APPROVED FOR USE WITH CRACKED CONCRETE PER AC 308. CURRENT ICC-ESR SHALL BE SUBMITTED.
      ii. ALL PERSONNEL INSTALLING ANCHORS SHALL BE TRAINED BY THE MANUFACTURER ON PROPER INSTALLATION TECHNIQUE. TRAINING DOCUMENTATION FROM THE MANUFACTURER SHALL BE AVAILABLE ON REQUEST.
      iii. HOLE SIZES AND INSTALLATION SHALL BE IN ACCORDANCE WITH MANUFACTURER'S PRINTED INSTALLATION INSTRUCTIONS (MPII)
      iv. ADHESIVE FOR REBAR AND ANCHORS SHALL HAVE BEEN TESTED IN ACCORDANCE WITH ACI 355.4 AND ICC-ES AC308 FOR CRACKED CONCRETE AND SEISMIC APPLICATIONS. DESIGN ADHESIVE BOND STRENGTH SHALL BE BASED ON ACI 355.4 TEMPERATURE CATEGORY "A" WITH INSTALLATIONS INTO DRY OR WATER SATURATED HOLES DRILLED USING A CARBIDE DRILL BIT INTO CONCRETE THAT HAS BEEN CURED FOR AT LEAST 21 DAYS.
      v. ANY ADHESIVE ANCHOR INSTALLED HORIZONTALLY OR IN A VERTICALLY INCLINED PLANE SHALL BE INSTALLED BY CERITIFIED ADHESIVE ANCHOR INSTALLER, PER ACI 318-14 17.8.2.2, AND SHALL BE INSPECTED PER ACI 318-14 17.8.2.4.
      vi. FILL IN ALL ABANDONED HOLES WITHIN 2" OF NEW ANCHOR LOCATIONS.
      vii. CONTRACTOR MUST ENSURE ANCHORS DO NOT CONFLICT WITH CONCRETE WALL REINFORCING

   f. GROUT: HIGH STRENGTH, NON-SHRINK STRUCTURAL GROUT. SEE SPECIFICATIONS.

3. REINFORCEMENT DETAILING

   a. ALL REINFORCING STEEL DETAILS SHALL BE IN ACCORDANCE WITH THE ACI CODE REQUIREMENTS (ACI 318 OR 350 - CURRENT EDITIONS).
   b. REINFORCING STEEL PLACING DRAWINGS AND BAR LISTS SHALL CONFORM TO THE ACI OR CRSI DETAILING MANUALS. ALL BAR AND MESH SUPPORTS MUST BE CLEARLY DETAILED
   c. CONCRETE COVER FOR REINFORCING SHALL BE INDICATED ON THE APPLICABLE REINFORCING STEEL SHOP DRAWINGS. HOWEVER, NO REINFORCING IN AREAS EXPOSED TO EARTH, WEATHER OR WATER SHALL HAVE COVER LESS THAN TWO INCHES.
   d. SPECIFIED COVER FOR REINFORCING PER ACI 318 (BUILDING STRUCTURES):
      FOOTINGS (BOTTOM).....3.0" (CAST AGAINST EARTH)
      FOOTINGS.....2.0" (FORMED)
      SLAB-ON-GRADE (REBAR).....2" FROM TOP OF SLAB (U.N.O.)
      WALLS.....2.0"
      PIER.....2.0"

      SPECIFIED COVER FOR REINFORCING PER ACI 350 (WATER CONTAINMENT STRUCTURES):
      FOOTINGS (BOTTOM).....3.0"
      FOOTINGS (TOP).....2.0"
      COLUMNS/BEAMS (PRIMARY REINF).....2.5"
      COLUMNS/BEAMS (STIRRUPS/TIES).....2.0"
      WALLS.....2.0"
      PIER.....2.0"
      MAT SLAB.....3.0" (BOTTOM)

   e. REINFORCEMENT IN WALLS AND STRIP FOOTINGS SHALL BE CONTINUOUS. HORIZONTAL BAR LAP SPLICES SHALL BE STAGGERED
   f. PROVIDE CORNER BARS AT ALL WALL AND FOUNDATION CORNERS TO BE LAPPED WITH THE HORIZONTAL BARS. CORNER BARS ARE TO MATCH THE HORIZONTAL BARS IN SIZE, GRADE AND SPACING UNLESS OTHERWISE SHOWN.
   g. HOOKS AND BENDS SHALL MEET ACI STANDARD UNLESS OTHERWISE INDICATED.
   h. SPLICES: CONTINUOUS REINFORCING BARS SHALL BE FURNISHED WITH CLASS 'B' TENSION LAPS SPLICES INCLUDING CORNER BARS, UNLESS NOTED OTHERWISE.
   i. MECHANICAL SPLICES SHALL NOT BE PERMITTED UNLESS SHOWN ON THE DRAWINGS OR APPROVED BY THE ENGINEER
   j. REINFORCING STEEL FABRICATION AND PLACEMENT SHALL BE IN ACCORDANCE WITH CRSI MANUAL OF STANDARD PRACTICE AND CRSI PLACING REINFORCING BARS (LATEST EDITIONS).
   k. REINFORCING STEEL IN FOOTINGS SHALL BE ASSEMBLED IN MAT GRILLES EQUALLY SPACED AND SECURELY WIRED TOGETHER BEFORE THE CONCRETE IS POURED.
   l. WALL FOOTING DOWELS ARE TO HAVE A FULL TENSION LAP SPLICE WITH THE WALL STEEL UNLESS NOTED OTHERWISE.
   m. PIER REINFORCEMENT SHALL BE DOWELED TO THE FOOTING. PROVIDE DOWELS EQUAL IN SIZE, NUMBER AND GRADE TO THE PIER REINFORCEMENT UNLESS OTHERWISE INDICATED. DOWELS SHALL BE HOOKED 90 DEGREES AT THE BOTTOM LEVEL OF FOOTING REINFORCEMENT. DOWELS SHALL BE LAPPED WITH THE PIER REINFORCEMENT
   n. SPREAD BARS AROUND SMALL OPENINGS AND SLEEVES IN SLABS AND WALLS WHERE POSSIBLE AND WHERE BAR SPACING WILL NOT EXCEED 1.5 TIMES THE NORMAL SPACING. DISCONTINUE BARS AT LARGE OPENINGS WHERE NECESSARY AND PROVIDE AN AREA OF REINFORCEMENT EQUAL TO THE INTERRUPTED REINFORCEMENT DISTRIBUTING ONE-HALF OF THIS REINFORCEMENT EACH SIDE OF THE OPENING (TENSION LAP SPLICED). HOLES LARGER THAN 12 INCHES IN ANY DIRECTION SHALL HAVE (2) #6 X 4'-0" DIAGONAL BARS IN BOTH FACES AT EACH CORNER
   o. ALL REINFORCING SHALL BE HELD SECURELY IN POSITION WITH STANDARD ACCESSORIES IN CONCRETE
   p. NO REINFORCING STEEL SHALL BE FIELD BENT WITHOUT THE APPROVAL OF THE STRUCTURAL ENGINEER. FIELD BENDING OF PLAIN REINFORCEMENT, IF PERMITTED, SHALL BE PERFORMED USING AN APPROVED AND APPROPRIATE SIZED PORTABLE HYDRAULIC DEVICE THAT MAKES ACI STANDARD RADIUS BENDS. NO OTHER FIELD BENDING METHOD SHALL BE PERMITTED.
   q. WELDING, INCLUDING TACK WELDING, FOR REINFORCING STEEL IS PROHIBITED. WELDING OF REINFORCING STEEL AND HIGH STRENGTH BOLTS, IE. A325 OR F1554 GR 55, WILL BE PERMITTED ONLY BY WRITTEN APPROVAL OF THE ENGINEER.
   r. ALL OPENINGS THROUGH WALLS, SLABS OR OTHER STRUCTURAL ELEMENTS NOT DETAILED ON THE STRUCTURAL DRAWINGS MUST BE LOCATED BY THE CONTRACTOR AND SHOWN ON THE APPLICABLE REINFORCING STEEL SHOP DRAWINGS. THE FINAL LOCATION OF ALL OPENINGS MUST BE REVIEWED BY THE ENGINEER BEFORE THE CONCRETE IS POURED.

4. FOOTINGS

   a. CENTER ALL FOOTINGS ON WALL, PIER OR COLUMN ABOVE UNLESS OTHERWISE INDICATED.

STRUCTURAL CONCRETE (CONTINUED)

5. FORMWORK

   a. SEE SPECIFICATIONS
   b. CAMBER: PROVIDE CAMBER TO COMPENSATE FOR DISPLACEMENT OF FORMS (SEE ALSO SPECS.) AND TO PROVIDE AS-CAST MEMBER CAMBER AS NOTED ON DRAWINGS.
   c. RUSTICATION STRIPS, CHAMFERS, DRIPS, MISC. EMBEDS, ETC. SEE DRAWINGS AND/OR ARCHITECTURAL DRAWINGS.
   d. PROVIDE 3/4" CHAMFER AT ALL EXPOSED CORNERS OF BEAMS, WALLS ETC. UNLESS OTHERWISE NOTED.
   e. OPENINGS FOR MEP TRADES ARE TO BE INCLUDED IN THE BID. ALL HOLES FOR OTHER TRADES WHICH MUST BE CUT OR FORMED AND WHICH ARE NOT SHOWN ON THE STRUCTURAL DESIGN(S) DRAWINGS SHALL BE SUBMITTED TO THE STRUCTURAL ENGINEER DESIGNER FOR REVIEW AND APPROVAL. ANY STRENGTHENING OR ADDITIONAL REINFORCEMENT REQUIRED SHALL BE FURNISHED BY THE CONTRACTOR WITHOUT ADDITIONAL COST TO THE OWNER.

6. CONCRETE FINISHES: SEE SPECIFICATIONS

   a. FORMED SURFACES:
      a) EXPOSED TO VIEW: SMOOTH FORM FINISH
      b) COVERED OR AS NOTED ON PLANS: AS-CAST

   b. FLATWORK:
      a) EXPOSED TO VIEW: SMOOTH TROWELED
      b) EXTERIOR RAMPS AND CONCRETE PADS: LIGHT BRUSH FINISH

7. CURING AND PROTECTION: SEE SPECIFICATIONS.

8. SEE THE MECHANICAL, ELECTRICAL AND SUPPLIERS DRAWINGS AND THE SPECIFICATIONS FOR THE LOCATIONS OF SPECIAL ANCHORS, CHAMFERS, SLEEVES, PIPES, CONDUITS AND OTHER DETAILS NOT SHOWN ON THE STRUCTURAL DRAWINGS.

9. EMBEDDED PIPES OR CONDUIT. MAXIMUM DIAMETER ONE THIRD x SLAB OR WALL THICKNESS, SPACED MINIMUM OF 3 TIMES DIAMETER ON CENTER. ALL EMBEDDED PIPES OR CONDUIT SHALL BE APPROVED BY ENGINEER OF RECORD PRIOR TO INSTALLING.

10. SIZE AND LOCATION OF EQUIPMENT PADS AND ANCHOR BOLTS SHALL BE AS REQUIRED BY THE EQUIPMENT MANUFACTURER. ALL CONDUIT PLACED IN SLAB SHALL BE APPROVED BY STRUCTURAL ENGINEER OF RECORD PRIOR TO INSTALLING CONDUIT AND POURING SLAB.

11. ANY CONSTRUCTION JOINTS IN STRUCTURES WHERE WATERSTOPS ARE USED SHALL BE PROTECTED BY WATERSTOP UNLESS OTHERWISE NOTED. CONTRACTOR SHALL SUBMIT A CONSTRUCTION JOINT LAYOUT PLAN FOR APPROVAL BY THE ENGINEER OF RECORD PRIOR TO CONSTRUCTION.

12. CONTRACTOR SHALL DESIGN, FURNISH, INSTALL, TEST, OPERATE, MONITOR, AND MAINTAIN A DEWATERING SYSTEM TO CONTROL HYDROSTATIC PRESSURE AND GROUND WATER ENTERING THE EXCAVATION.

13. SUBMITTALS

   a. CONTRACTOR SHALL BE RESPONSIBLE FOR SUBMITTING THE FOLLOWING DOCUMENTS TO THE ENGINEER OF RECORD:
      i. CONCRETE MIX DESIGN
      ii. CONCRETE REINFORCING DRAWINGS

TENSION DEVELOPMENT / LAP SPLICE SCHEDULE (UNCOATED BARS)

DEVELOPMENT / LAP SPLICE LENGTH IN CONCRETE (f'c = 5,000 PSI)

BAR SIZE	DEVELOPMENT LENGTH (IN)		CLASS 'B' LAP SPLICE LENGTH (IN)		STD 90 DEG. HOOK (IN)		
	BAR TYPE 1	BAR TYPE 2	BAR TYPE 1	BAR TYPE 2	EMBED	LEG LENGTH	BEND DIA.
4	15	24	20	30	7	8	3
5	20	30	26	40	9	10	3 3/4
6	24	36	31	48	10	12	4 1/2

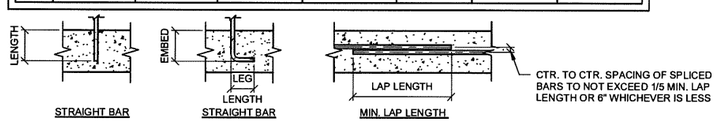

BAR TYPE 1 - CLEAR SPACING OF BARS BEING DEVELOPED OR SPLICED NOT LESS THAN Db, CLEAR COVER NOT LESS THAN Db, AND STIRRUPS OR TIES THROUGHOUT Ld NOT LESS THAN CODE MINIMUM
OR
CLEAR SPACING OF BARS BEING DEVELOPED OR SPLICED NOT LESS THAN 2*Db AND CLEAR COVER NOT LESS THAN Db.

BAR TYPE 2 - TOP BARS WITH MORE THAN 12" OF FRESH CONCRETE CAST BELOW **AND** OTHER CASES

CONCRETE MASONRY

1. REFERENCES
   a. TMS 402-2016 BUILDING CODE FOR MASONRY STRUCTURES

2. MATERIALS:
   a. MASONRY WALLS SHALL CONSIST OF ASTM C-90, GRADE N-1, HOLLOW CONCRETE MASONRY UNIT
   b. MASONRY SHALL HAVE A MINIMUM COMPRESSIVE STRENGTH f'm = 2000 PSI.
   c. MORTAR SHALL COMPLY WITH ASTM C-270, AND SHALL BE TYPE S (1800 PSI)
   d. CORE FILL GROUT SHALL COMPLY WITH ASTM C-476, WITH A MINIMUM COMPRESSIVE STRENGTH OF 2000 PSI.

3. MASONRY SHALL BE LAID IN A RUNNING BOND PATTERN UNLESS OTHERWISE NOTED. NO CONTINUOUS VERTICAL JOINTS ARE PERMITTED AT WALL CORNERS, INTERSECTIONS, AND OPENING EDGES. SAW TOOTH BLOCK EACH ALTERNATE COURSE AT THESE LOCATIONS TO ACHIEVE MONOLITHIC CONSTRUCTION.

4. VERTICAL REINFORCEMENT: LOCATION, SIZE AND SPACING SHALL BE AS INDICATED ON THE STRUCTURAL DRAWINGS. WALLS SHALL BE REINFORCED FULL HEIGHT IN GROUT FILLED CELLS AT ALL WALL CORNERS, INTERSECTIONS, ENDS, AND ADJACENT TO OPENINGS.

5. PROVIDE REINFORCING STEEL DOWELS INTO STRUCTURE ABOVE AND BELOW WITH SIZE AND SPACING TO MATCH VERTICAL REINFORCEMENT, UNLESS OTHERWISE NOTED.

6. DOWELS TO THE FOUNDATIONS WITH SIZE AND SPACING TO MATCH VERTICAL REINFORCING. LAP SPLICES SHALL BE MEASURED ABOVE THE STEM WALL.

7. VERTICAL REINFORCEMENT SHALL BE CENTERED IN GROUT FILLED CELLS UNLESS NOTED OTHERWISE. REINFORCEMENT SHALL BE HELD SECURELY IN POSITION AT THE TOP AND BOTTOM OF WALL

8. HORIZONTAL JOINT REINFORCEMENT: 9 GAGE GALVANIZED DUR-O-WAL LADDER TYPE OR ENGINEER APPROVED SUBSTITUTE, LOCATED AT SIXTEEN (16) INCHES VERTICALLY.

9. PROVIDE HORIZONTAL JOINT REINFORCING IN FREE STANDING WALLS AT EIGHT (8) INCHES VERTICALLY.

10. CONTROL JOINTS: PROVIDED AS SPECIFIED ON PLAN AND COORDINATED WITH ARCHITECT. TERMINATE JOINT REINFORCEMENT EACH SIDE OF CONTROL JOINTS. SEE ARCHITECTURAL DRAWINGS FOR SEALANT REQUIREMENTS AT CONTROL JOINTS.

11. MASONRY CONTROL JOINTS SHALL BE LOCATED A MINIMUM OF 2'-0" FROM ALL WALL OPENINGS, INTERSECTIONS, AND CORNERS, UNLESS NOTED OTHERWISE.

12. MASONRY CONTROL JOINTS SHALL NOT BE LOCATED ABOVE OR BELOW ANY WALL OPENING.

13. GROUTING: CONTRACTOR SHALL SUBMIT PROPOSED GROUT MIX DESIGN FOR ENGINEER REVIEW AND APPROVAL PRIOR TO CONSTRUCTION. GROUT SLUMP SHALL BE BETWEEN 8 AND 11 INCHES. USE OF SUPERPLASTICIZER IS PROHIBITED. CELLS WHICH ARE TO RECEIVE GROUT SHALL BE VERTICALLY ALIGNED WITH A CLEAR, UNOBSTRUCTED AND CONTINUOUS VERTICAL SPACE. CELLS SHALL BE FILLED COMPLETELY AND VIBRATION CONSOLIDATED. GROUTING OPERATIONS SHALL BE CONTINUOUS AND SHALL NOT BE STOPPED FOR A PERIOD EXCEEDING ONE HOUR. WALL SHALL BE CONSTRUCTED IN MAXIMUM 5'-0" LIFTS BETWEEN GROUT POURS.

14. GROUTING AND REINFORCING: ALL MASONRY AND GROUTING AND REINFORCING WORK SHALL BE PERFORMED BY MASONRY CRAFTWORKERS WHO HAVE SUCCESSFULLY COMPLETED THE INTERNATIONAL MASONRY "INSTITUTE (1-800-IMI-0988) TRAINING COURSE FOR GROUTING AND REINFORCED MASONRY CONSTRUCTION, OR EQUAL."

TENSION DEVELOPMENT / LAP SPLICE LENGTH IN MASONRY (INCHES)

BAR #	MIN. CLEAR COVER TO FACE OF CMU:			
	1 1/2"	2"	> 3 1/4"	> 5 1/4"
5	45	40	30	30
6	54	54	46	36
7	63	63	62	42
8	72	72	72	58

BIDDING INFORMATION: IF THE MORE RECENT UFC 3-301-01, WITH CHANGE 6, DATED 30 JANUARY 2026, IS REQUIRED BY THE CLIENT TO BE THE GOVERNING CODE, STRUCTURAL DESIGN WILL BE REQUIRED TO BE UPDATED TO REFERENCE ASCE 7-22. THIS CHANGE WILL MOST NOTABLY DOUBLE GROUND SNOW LOAD VALUES, INCREASE WIND PRESSURES, AND ALTER VARIOUS OTHER FACTORS OF DESIGN. IF IMPLEMENTED BY THE CLIENT, REVISED STRUCTURAL DOCUMENTS WILL BE PROVIDED AT A FUTURE DATE WITH UPDATED STRUCTURAL INFORMATION.

ISSUED FOR BID - FEBRUARY 2026

THIS DRAWING PRODUCED ON REVIT
DO NOT REVISE MANUALLY

"THIS DOCUMENT IS THE PROPERTY OF NAVAL FACILITIES ENGINEERING COMMAND, PREPARED BY TETRA TECH ENGINEERING CORPORATION PC, AND IS PROVIDED UPON THE CONDITION THAT IT WILL NOT BE REPRODUCED, COPIED, OR ISSUED TO A THIRD PARTY, AND WILL BE USED SOLELY FOR THE ORIGINAL INTENDED PURPOSE AND SOLELY FOR THE EXECUTION OR REVIEW OF THE ENGINEERING CONSTRUCTION OF THE PROJECT".

IT IS A VIOLATION OF THE NEW YORK STATE EDUCATION LAW, ARTICLE 145, FOR ANY PERSON, UNLESS UNDER THE DIRECTION OF A NEW YORK STATE LICENSED PROFESSIONAL ENGINEER, TO ALTER AN ITEM ON THIS DOCUMENT IN ANY WAY.

SYM	DESCRIPTION	DATE	APPR

NAVFAC

STATE OF NEW YORK — ANDREW T. CARTER — 084069-1 — LICENSED PROFESSIONAL ENGINEER
04/21/2026 SEAL

TETRA TECH
www.tetratech.com
5700 LAKE WRIGHT DR., SUITE 102
NORFOLK, VA 23502
PHONE: (757) 461-3768 FAX: (757) 461-1148

A/E INFO

APPROVED
FOR COMMANDER NAVFAC

ACTIVITY
As per document from Nicole Cowand, NAVFAC MIDLANT PLL/EV3

SATISFACTORY TO — DATE 03/24/2026
DES JAT — DRW BRF — CHK ATC
PM/DM
BRANCH MANAGER
CHIEF ENG/ARCH
FIRE PROTECTION

DEPARTMENT OF THE NAVY
NAVAL FACILITIES ENGINEERING SYSTEMS COMMAND
RE-1001
NAVAL FACILITIES ENGINEERING COMMAND ~ MID-ATLANTIC
NAVAL INDUSTRIAL RESERVE ORDNANCE PLANT
NAVAL WEAPONS INDUSTRIAL RESERVE PLANT BETHPAGE, NEW YORK
BETHPAGE NY PHASE III
GROUNDWATER TREATMENT PLANT
STRUCTURAL GENERAL NOTES II

SCALE: AS NOTED
EPROJECT NO.:
CONSTR. CONTR. NO. N62472-99-D-0032
NAVFAC DRAWING NO. 112G08005
SHEET OF S-002

DEFERRED SUBMITTALS

1. IN ACCORDANCE WITH THE SPECIFICATIONS DESIGNS FOR THE ITEMS LISTED BELOW ARE NOT INCLUDED IN THE CONTRACT DOCUMENTS. DESIGN OF THESE ELEMENTS SHALL BE THE RESPONSIBILITY OF THE CONTRACTOR, AND SHALL BE DESIGNED AND SEALED BY A REGISTERED PROFESSIONAL ENGINEER LICENSED IN THE STATE OF NEW YORK:

   A. FRP GUARDRAIL AND HANDRAIL SYSTEMS AND THEIR CONNECTIONS
   B. FRP GRATING AND CHECKER PLATE SURFACES (DESIGN FOR MINIMUM SIZES PROVIDED)
   C. STEEL CONNECTIONS
   D. COLD-FORMED STEEL FRAMING AND TRUSSES, INCLUDING ALL CONNECTIONS

2. DESIGN OF THE ITEMS LISTED ABOVE SHALL BE IN ACCORDANCE WITH THE ICC INTERNATIONAL BUILDING CODE, 2021 EDITION, NEW YORK BUILDING CODE, 2020 EDITION, OSHA AND SHALL INCLUDE ALL ATTACHMENTS TO THE STRUCTURE

COLD-FORMED STEEL FRAMING

1. DESIGN, FABRICATION, AND ERECTION: AMERICAN IRON AND STEEL INSTITUTE (AISI), SPECIFICATION FOR THE DESIGN OF COLD-FORMED STEEL STRUCTURAL MEMBERS, LATEST EDITION.
2. MATERIAL: ASTM A 500, STANDARD SPECIFICATION FOR COLD FORMED WELDED AND SEAMLESS CARBON STEEL STRUCTURAL TUBING IN ROUNDS AND SHAPES. ASTM A 653/A 653M, STANDARD SPECIFICATION FOR STEEL SHEETS, ZINC-COATED (GALVANIZED) OR ZINC-IRON ALLOY COATED BY THE HOT DIP PROCESS.
3. SHOP DRAWINGS: SUBMIT SHOP DRAWINGS BEARING THE SEAL AND SIGNATURE OF A PROFESSIONAL ENGINEER REGISTERED IN THE STATE WHERE COLD-FORMED METAL FRAMING WILL BE INSTALLED
4. BRIDGING: IN ACCORDANCE WITH AISI "DESIGN GUIDE FOR COLD-FORMED STEEL STRUCTURAL MEMBERS"
5. ALL COLD-FORMED STEEL MEMBER DESIGN, INCLUDING CONNECTIONS, SHALL BE BY A NEW YORK REGISTERED SPECIALTY ENGINEER. COLD-FORMED STEEL DESIGN SHALL BE IN CONFORMANCE WITH THE AMERICAN IRON AND STEEL INSTITUTE (AISI) "SPECIFICATION FOR THE DESIGN OF COLD-FORMED STEEL STRUCTURAL MEMBERS".

COLD-FORMED STEEL TRUSSES

1. ALL COLD-FORMED STEEL TRUSS DESIGN, INCLUDING CONNECTIONS, SHALL BE BY A NEW YORK REGISTERED SPECIALTY ENGINEER. COLD-FORMED STEEL DESIGN SHALL BE IN CONFORMANCE WITH THE AMERICAN IRON AND STEEL INSTITUTE (AISI) "SPECIFICATION FOR THE DESIGN OF COLD-FORMED STEEL STRUCTURAL MEMBERS".
2. ENGINEERED COLD-FORMED STEEL TRUSSES SHALL BE DESIGNED FOR THE SUPERIMPOSED LOADS STATED IN THE DESIGN CRITERIA, IN ADDITION TO SPECIAL LOADING CONDITIONS WHERE SPECIFIED ON THE STRUCTURAL DRAWINGS. DESIGN WIND LOADS SHALL BE COMPONENT & CLADDING PRESSURES. DESIGN LAYOUT, SPACING AND CONFIGURATION SHALL BE AS INDICATED ON THE STRUCTURAL DRAWINGS. SUBMIT SHOP DRAWINGS FOR REVIEW AND APPROVAL PRIOR TO FABRICATION OR CONSTRUCTION. SHOP DRAWINGS SHALL CLEARLY INDICATE ALL TRUSS TO TRUSS CONNECTIONS, CONNECTIONS AMONG TRUSS MEMBERS, TRUSS TO STRUCTURE CONNECTIONS INCLUDING STEEL EMBED PLATES, AND ANY CONNECTORS RELATED TO ITEMS PROVIDED AS PART OF THE ENGINEERED TRUSS SYSTEM. SHOP DRAWINGS SHALL INCLUDE AN ERECTION PLAN WHICH IDENTIFIES ALL ROOF TRUSS COMPONENTS AND ALL PERMANENT BRACING REQUIRED FOR TRUSS DESIGN. SHOP DRAWINGS SHALL BEAR THE ORGINAL SIGNATURE AND SEAL OF A NEW YORK REGISTERED PROFESSIONAL ENGINEER.
3. ROOF TRUSS LOADING: REFER TO DESIGN CRITERIA ON S-001 AND S-107
4. WIND LOADS USED TO DESIGN ROOF TRUSS SUPPORT CONNECTIONS SHALL BE MAIN WIND FORCE RESISTING SYSTEM PRESSURES CALCULATED PER ASCE 7
5. COLD-FORMED STEEL TRUSSES TOP CHORD MEMBERS SHALL BE 54 MILS THICK MINIMUM

FIBERGLASS REINFORCED PLASTIC GRATING

1. FRP GRATING SHALL BE "FIBERGRATE", AS MANUFACTURED BY FIBERGRATE COMPOSITE STRUCTURES, INC., OR ENGINEER APPROVED EQUAL.
2. FIBERGLASS REINFORCEMENT SHALL BE CONTINUOUS ROVING IN SUFFICIENT QUANTITIES AS NEEDED BY THE APPLICATION AND/OR PHYSICAL PROPERTIES REQUIRED.
3. RESIN SHALL BE VINYL ESTER, WITH CHEMICAL FORMULATIONS AS NECESSARY TO PROVIDE THE CORROSION RESISTANCE, STRENGTH AND OTHER PHYSICAL PROPERTIES AS REQUIRED. THE RESIN USED IN THE MANUFACTURE OF THE GRATING SHALL BE VI-CORR.
4. GRATING SHALL BE FIRE RETARDANT WITH A FLAME SPREAD RATING OF 25 OR LESS PER ASTM E84 TUNNEL TEST.
5. GRATING TO BE 2" DEEP T3320 OR T5020, T- BAR CONFIGURATION WITH 33% OR 50% OPEN AREA (BASED ON ADA ACCESS OR APPROVED EQUAL)
6. NON-SLIP SURFACING: GRATING SHALL BE MANUFACTURED WITH A CONCAVE, MENISCUS PROFILE ON THE TOP OF EACH BAR PROVIDING MAXIMUM SLIP RESISTANCE.
7. COLOR: ORANGE OR DARK GRAY, TO BE SELECTED BY OWNER.
8. LOAD/DEFLECTION: FOR THE SPANS SHOWN ON THE DRAWINGS, GRATING SHALL SUPPORT A UNIFORM DISTRIBUTED LOAD OF 200 PSF OR A CONCENTRATED MIDSPAN LINE LOAD OF 300 LB/FT, WITH A MAXIMUM DEFLECTION OF 3/8" OR SPAN (INCHES)/120, WHICHEVER IS LESS.
9. LAYOUT: EACH GRATING SECTION SHALL BE READILY REMOVABLE, UNLESS NOTED OTHERWISE. MANUFACTURER TO PROVIDE OPENINGS AND HOLES WHERE LOCATED ON THE DRAWINGS. GRATING OPENINGS THAT FIT AROUND PROTRUSIONS SHALL BE DISCONTINUOUS AT APPROXIMATELY THE CENTERLINE OF OPENING SO THAT EACH SECTION IS READILY REMOVABLE. COORDINATE WITH ALL DISCIPLINE DRAWINGS FOR REQUIRED HOLE OPENINGS.
10. ALL MECHANICAL GRATING CLIPS SHALL BE MANUFACTURED OF TYPE 316 STAINLESS STEEL. GRATING CLIPS SHALL BE PROVIDED AT A MAXIMUM SPACING OF 48", WITH A MINIMUM OF FOUR CLIPS PER PIECE OF GRATING.
11. WHEN REQUIRED, FIELD CUT AND DRILL FRP GRATING WITH CARBIDE OR DIAMOND TIPPED BITS AND BLADES. CUT OR DRILLED SURFACES SHALL BE SEALED IN ACCORDANCE WITH MANUFACTURER'S WRITTEN INSTRUCTIONS.

FIBERGLASS REINFORCED PLASTIC

1. ALL FINISHED SURFACES OF MATERIAL AND FABRICATIONS SHALL BE SMOOTH, RESIN-FREE, FREE OF VOIDS AND WITHOUT DRY SPOTS, CRACKS, CRAZES OR UNREINFORCED AREAS. ALL GLASS FIBERS SHALL BE WELL COVERED WITH RESIN TO PROTECT AGAINST EXPOSURE DUE TO WEAR OR WEATHERING.
2. ALL SHOP CUTS OR DRILLING SHALL BE COATED WITH VINYL ESTER RESIN TO PROVIDE CORROSION RESISTANCE. ALL FIELD FABRICATED CUTS AND DRILLING SHALL BE COATED SIMILARLY BY THE CONTRACTOR IN ACCORDANCE WITH THE MANUFACTURER'S INSTRUCTIONS.
3. CONNECTIONS OF FRP MEMBERS SHALL BE WITH STAINLESS STEEL TYPE 316, BOLTS AND NUTS, UNLESS SPECIFICALLY NOTED OTHERWISE.

BIDDING INFORMATION: IF THE MORE RECENT UFC 3-301-01, WITH CHANGE 6, DATED 30 JANUARY 2026, IS REQUIRED BY THE CLIENT TO BE THE GOVERNING CODE, STRUCTURAL DESIGN WILL BE REQUIRED TO BE UPDATED TO REFERENCE ASCE 7-22. THIS CHANGE WILL MOST NOTABLY DOUBLE GROUND SNOW LOAD VALUES, INCREASE WIND PRESSURES, AND ALTER VARIOUS OTHER FACTORS OF DESIGN. IF IMPLEMENTED BY THE CLIENT, REVISED STRUCTURAL DOCUMENTS WILL BE PROVIDED AT A FUTURE DATE WITH UPDATED STRUCTURAL INFORMATION.

ISSUED FOR BID - FEBRUARY 2026

THIS DRAWING PRODUCED ON REVIT
DO NOT REVISE MANUALLY

"THIS DOCUMENT IS THE PROPERTY OF NAVAL FACILITIES ENGINEERING COMMAND, PREPARED BY TETRA TECH ENGINEERING CORPORATION PC, AND IS PROVIDED UPON THE CONDITION THAT IT WILL NOT BE REPRODUCED, COPIED, OR ISSUED TO A THIRD PARTY, AND WILL BE USED SOLELY FOR THE ORIGINAL INTENDED PURPOSE AND SOLELY FOR THE EXECUTION OR REVIEW OF THE ENGINEERING CONSTRUCTION OF THE PROJECT".

IT IS A VIOLATION OF THE NEW YORK STATE EDUCATION LAW, ARTICLE 145, FOR ANY PERSON, UNLESS UNDER THE DIRECTION OF A NEW YORK STATE LICENSED PROFESSIONAL ENGINEER, TO ALTER AN ITEM ON THIS DOCUMENT IN ANY WAY.

SYM	DESCRIPTION	DATE	APPR

NAVFAC

STATE OF NEW YORK — ADAM T. CUTLER — 085855-1 — LICENSED PROFESSIONAL ENGINEER
04/21/2026 SEAL

TETRA TECH
www.tetratech.com
5700 LAKE WRIGHT DR., SUITE 100
NORFOLK, VA 23502
PHONE: (757) 451-3758 FAX: (757) 451-6148

A/E INFO

APPROVED
FOR COMMANDER NAVFAC

ACTIVITY
As per document from Nicole Coward, NAVFAC MIDLANT PL/EVO

SATISFACTORY TO DATE 03/24/2026

DES JAT | DRW BRF | CHK ATC

PM/DM
BRANCH MANAGER
CHIEF ENG/NAVY
FIRE PROTECTION

DEPARTMENT OF THE NAVY
NAVAL FACILITIES ENGINEERING SYSTEMS COMMAND
NAVAL FACILITIES ENGINEERING COMMAND – MID-ATLANTIC
RE-108
NAVAL INDUSTRIAL RESERVE ORDNANCE PLANT
NAVAL WEAPONS INDUSTRIAL RESERVE PLANT BETHPAGE, NEW YORK
BETHPAGE NY PHASE III
GROUNDWATER TREATMENT PLANT
STRUCTURAL GENERAL NOTES III

SCALE: AS NOTED
SPROJECT NO.
CONSTR. CONTR. NO. N62472-99-D-0032
NAVFAC DRAWING NO. 112GO8005
SHEET OF
S-003

NOTIFICATION: THIS PAGE CONTAINS SENSITIVE BUT UNCLASSIFIED INFORMATION WHICH IS PROTECTED BY THE FREEDOM OF INFORMATION ACT

EXEMPTION 3. (5 USC 552(b)(3))

Information exempted by other statutes

10 USC Section 130(e) Treatment of Certain Critical Infrastructure Security Information

Pages 45-5

TO REQUEST A COPY OF THE DOCUMENT PLEASE CONTACT

Department of the Navy
Freedom of Information Act Office

http://www.secnav.navy.mil/foia/Pages/default.aspx

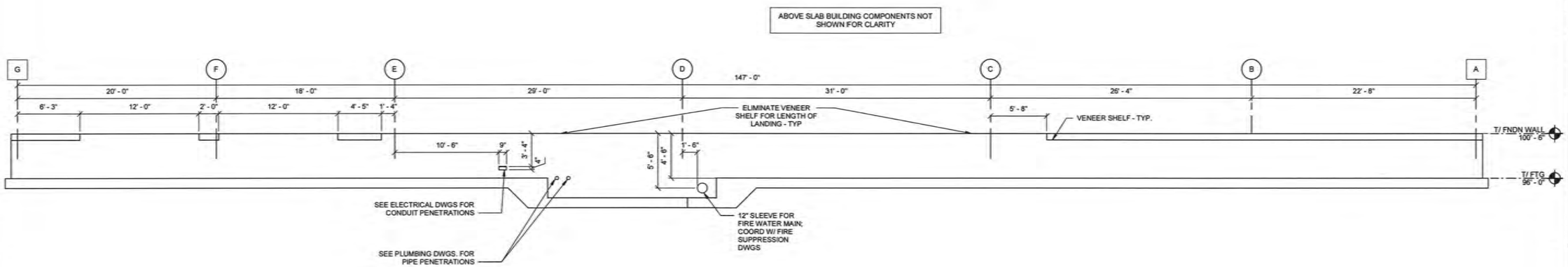

1 / S-201 NORTH ELEVATION - GWTP BUIDING
SCALE: 3/16" = 1'-0"

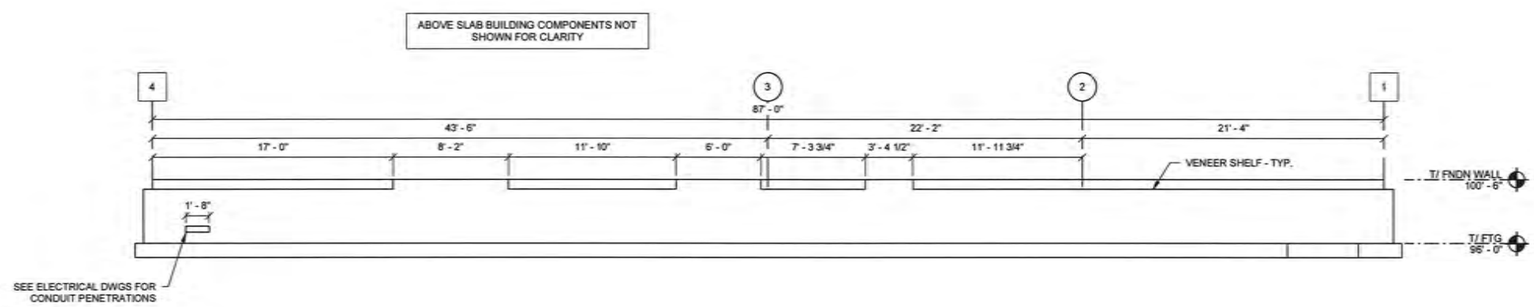

2 / S-201 EAST ELEVATION - GWTP BUILDING
SCALE: 3/16" = 1'-0"

0 2'-8" 5'-4" 10'-8"
SCALE: 3/16" = 1'-0"

BIDDING INFORMATION: IF THE MORE RECENT UFC 3-301-01, WITH CHANGE 6, DATED 30 JANUARY 2026, IS REQUIRED BY THE CLIENT TO BE THE GOVERNING CODE, STRUCTURAL DESIGN WILL BE REQUIRED TO BE UPDATED TO REFERENCE ASCE 7-22. THIS CHANGE WILL MOST NOTABLY DOUBLE GROUND SNOW LOAD VALUES, INCREASE WIND PRESSURES, AND ALTER VARIOUS OTHER FACTORS OF DESIGN. IF IMPLEMENTED BY THE CLIENT, REVISED STRUCTURAL DOCUMENTS WILL BE PROVIDED AT A FUTURE DATE WITH UPDATED STRUCTURAL INFORMATION.

ISSUED FOR BID - FEBRUARY 2026

THIS DRAWING PRODUCED ON REVIT
DO NOT REVISE MANUALLY

"THIS DOCUMENT IS THE PROPERTY OF NAVAL FACILITIES ENGINEERING COMMAND, PREPARED BY TETRA TECH ENGINEERING CORPORATION PC, AND IS PROVIDED UPON THE CONDITION THAT IT WILL NOT BE REPRODUCED, COPIED, OR ISSUED TO A THIRD PARTY, AND WILL BE USED SOLELY FOR THE ORIGINAL INTENDED PURPOSE AND SOLELY FOR THE EXECUTION OR REVIEW OF THE ENGINEERING CONSTRUCTION OF THE PROJECT".

IT IS A VIOLATION OF THE NEW YORK STATE EDUCATION LAW, ARTICLE 145, FOR ANY PERSON, UNLESS UNDER THE DIRECTION OF A NEW YORK STATE LICENSED PROFESSIONAL ENGINEER, TO ALTER AN ITEM ON THIS DOCUMENT IN ANY WAY.

SYM	DESCRIPTION	DATE	APPR

NAVFAC

STATE OF NEW YORK — LICENSED PROFESSIONAL ENGINEER — 095805-1
04/21/2026 SEAL

TETRA TECH
www.tetratech.com
3700 LAKE WRIGHT DR., SUITE 100
NORFOLK, VA 23502
PHONE: (757) 461-2700 FAX: (757) 461-4148

A/E INFO

APPROVED
FOR COMMANDER NAVFAC

ACTIVITY
As per document from Nicole Coward, NAVFAC MID-LANT PL/ES/D

SATISFACTORY TO DATE 03/24/2026

DES JAT DRW BRF CHK ATC

PM/QM
BRANCH MANAGER
CHIEF ENG/ARCH
FIRE PROTECTION

DEPARTMENT OF THE NAVY
NAVAL FACILITIES ENGINEERING SYSTEMS COMMAND
NAVAL FACILITIES ENGINEERING COMMAND ~ MID-ATLANTIC
NAVAL INDUSTRIAL RESERVE ORDNANCE PLANT
FE-108
NAVAL WEAPONS INDUSTRIAL RESERVE PLANT BETHPAGE, NEW YORK
BETHPAGE NY PHASE III
GROUNDWATER TREATMENT PLANT
GWTP STRUCTURAL BUILDING ELEVATIONS

SCALE: AS NOTED
EPROJECT NO.:
CONSTR. CONTR. NO.
N62472-99-D-0032
NAVFAC DRAWING NO.
112GO8005
SHEET OF
S-201

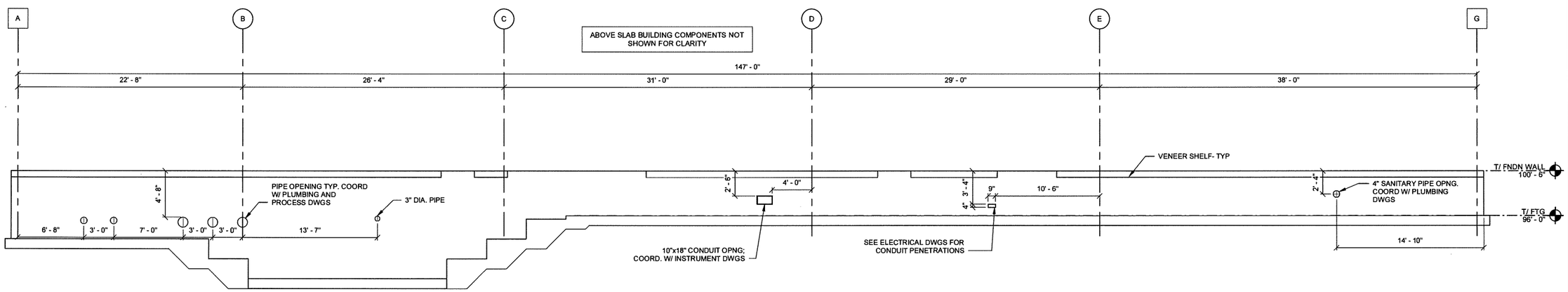

1 S-202 SOUTH ELEVATION - GWTP BUILDING
SCALE: 3/16" = 1'-0"

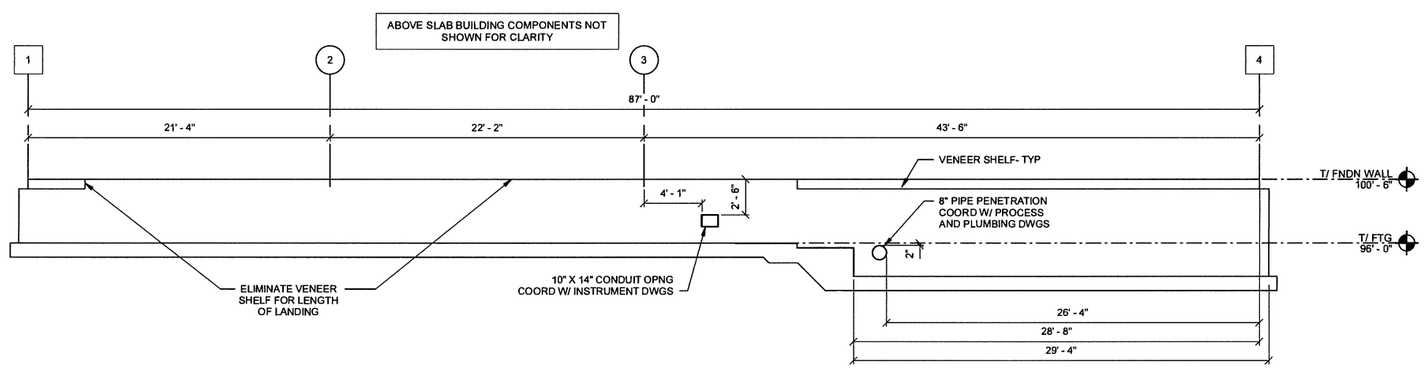

2 S-202 WEST ELEVATION - GWTP BUILDING
SCALE: 3/16" = 1'-0"

0 2'-8" 5'-4" 10'-8"
SCALE: 3/16" = 1'-0"

BIDDING INFORMATION: IF THE MORE RECENT UFC 3-301-01, WITH CHANGE 6, DATED 30 JANUARY 2026, IS REQUIRED BY THE CLIENT TO BE THE GOVERNING CODE, STRUCTURAL DESIGN WILL BE REQUIRED TO BE UPDATED TO REFERENCE ASCE 7-22. THIS CHANGE WILL MOST NOTABLY DOUBLE GROUND SNOW LOAD VALUES, INCREASE WIND PRESSURES, AND ALTER VARIOUS OTHER FACTORS OF DESIGN. IF IMPLEMENTED BY THE CLIENT, REVISED STRUCTURAL DOCUMENTS WILL BE PROVIDED AT A FUTURE DATE WITH UPDATED STRUCTURAL INFORMATION.

ISSUED FOR BID - FEBRUARY 2026

THIS DRAWING PRODUCED ON REVIT
DO NOT REVISE MANUALLY

"THIS DOCUMENT IS THE PROPERTY OF NAVAL FACILITIES ENGINEERING COMMAND, PREPARED BY TETRA TECH ENGINEERING CORPORATION PC, AND IS PROVIDED UPON THE CONDITION THAT IT WILL NOT BE REPRODUCED, COPIED, OR ISSUED TO A THIRD PARTY, AND WILL BE USED SOLELY FOR THE ORIGINAL INTENDED PURPOSE AND SOLELY FOR THE EXECUTION OR REVIEW OF THE ENGINEERING CONSTRUCTION OF THE PROJECT".

IT IS A VIOLATION OF THE NEW YORK STATE EDUCATION LAW, ARTICLE 145, FOR ANY PERSON, UNLESS UNDER THE DIRECTION OF A NEW YORK STATE LICENSED PROFESSIONAL ENGINEER, TO ALTER AN ITEM ON THIS DOCUMENT IN ANY WAY.

SYM	DESCRIPTION	DATE	APPR

NAVFAC

STATE OF NEW YORK — ANDREW TODD JONES — 084005-1 — LICENSED PROFESSIONAL ENGINEER
04/21/2026 SEAL

TETRA TECH
www.tetratech.com
5700 LAKE WRIGHT DR., SUITE 102
NORFOLK, VA 23502
PHONE: (757) 461-2788 FAX: (757) 461-4148

A/E INFO

APPROVED
FOR COMMANDER NAVFAC 4/30/2026

ACTIVITY
As per document from Nicole Coward, NAVFAC MIDLANT PLL/EV3

SATISFACTORY TO DATE 03/24/2026
DES JAT DRW BRF CHK ATC
PM/DM
BRANCH MANAGER
CHIEF ENG/ARCH
FIRE PROTECTION

DEPARTMENT OF THE NAVY
NAVAL FACILITIES ENGINEERING SYSTEMS COMMAND
NAVAL FACILITIES ENGINEERING COMMAND ~ MID-ATLANTIC
RE-108
NAVAL INDUSTRIAL RESERVE ORDNANCE PLANT
NAVAL WEAPONS INDUSTRIAL RESERVE PLANT BETHPAGE, NEW YORK
BETHPAGE NY PHASE III
GROUNDWATER TREATMENT PLANT
GWTP STRUCTURAL BUILDING ELEVATIONS

SCALE: AS NOTED
EPROJECT NO.:
CONSTR. CONTR. NO. N62472-99-D-0032
NAVFAC DRAWING NO. 112GO8005
SHEET OF
S-202

NOTIFICATION: THIS PAGE CONTAINS SENSITIVE BUT UNCLASSIFIED INFORMATION WHICH IS PROTECTED BY THE FREEDOM OF INFORMATION ACT

EXEMPTION 3. (5 USC 552(b)(3))

Information exempted by other statutes

10 USC Section 130(e) Treatment of Certain Critical Infrastructure Security Information

Page 54

TO REQUEST A COPY OF THE DOCUMENT PLEASE CONTACT

Department of the Navy
Freedom of Information Act Office

http://www.secnav.navy.mil/foia/Pages/default.aspx

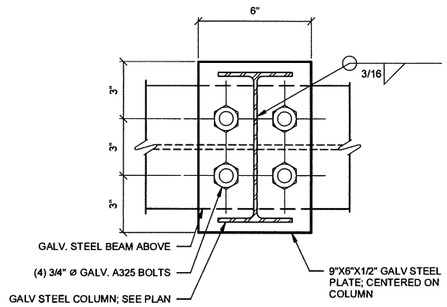

A / S-204 EXT PIPE SUPPORT BEAM TO COLUMN CONN.
SCALE: 3" = 1'-0"

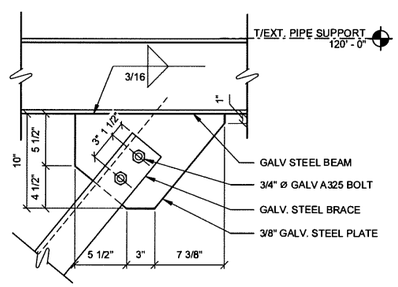

B / S-204 STEEL BRACE CONNECTION @ FLANGE
SCALE: 1 1/2" = 1'-0"

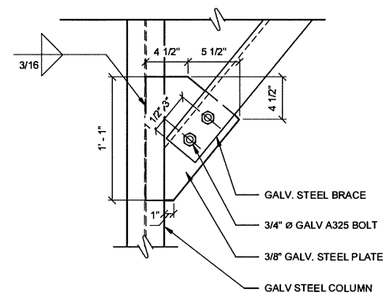

C / S-204 STEEL BRACE CONNECTION @ WEB
SCALE: 1 1/2" = 1'-0"

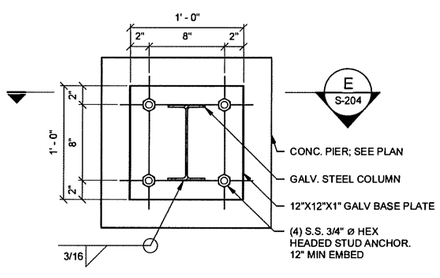

D / S-204 EXT PIPE SUPPORT BASE PLATE
SCALE: 1 1/2" = 1'-0"

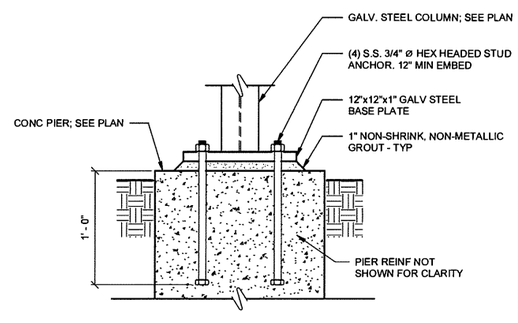

E / S-204 EXT PIPE SUPPORT BASE PLATE SECTION
SCALE: 1 1/2" = 1'-0"

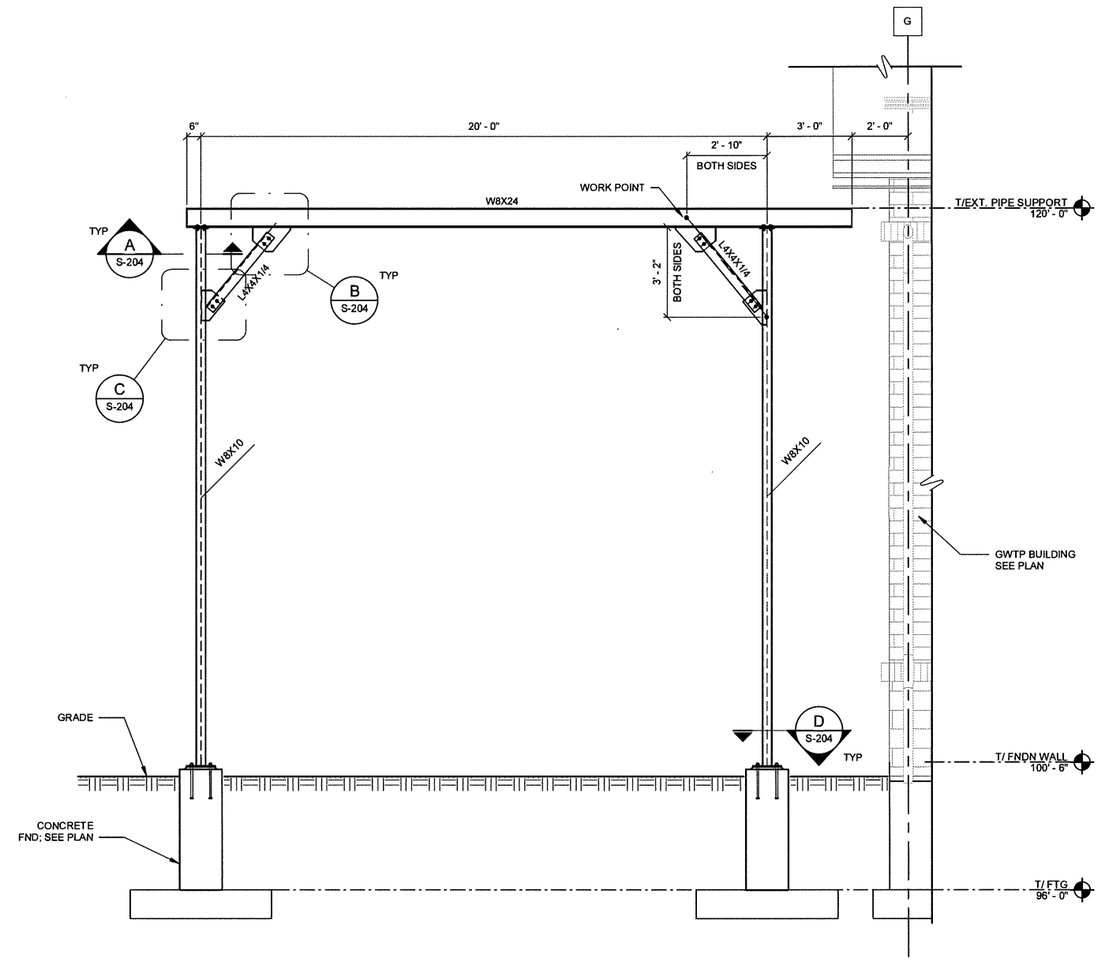

1 / S-204 PIPE SUPPORT ELEVATION
SCALE: 3/8" = 1'-0"

0 2" 4" 8"
SCALE: 3" = 1'-0"

0 4" 8" 1'-4"
SCALE: 1 1/2" = 1'-0"

0 1'-4" 2'-8" 5'-4"
SCALE: 3/8" = 1'-0"

BIDDING INFORMATION: IF THE MORE RECENT UFC 3-301-01, WITH CHANGE 6, DATED 30 JANUARY 2026, IS REQUIRED BY THE CLIENT TO BE THE GOVERNING CODE, STRUCTURAL DESIGN WILL BE REQUIRED TO BE UPDATED TO REFERENCE ASCE 7-22. THIS CHANGE WILL MOST NOTABLY DOUBLE GROUND SNOW LOAD VALUES, INCREASE WIND PRESSURES, AND ALTER VARIOUS OTHER FACTORS OF DESIGN. IF IMPLEMENTED BY THE CLIENT, REVISED STRUCTURAL DOCUMENTS WILL BE PROVIDED AT A FUTURE DATE WITH UPDATED STRUCTURAL INFORMATION.

ISSUED FOR BID - FEBRUARY 2026

THIS DRAWING PRODUCED ON REVIT
DO NOT REVISE MANUALLY

"THIS DOCUMENT IS THE PROPERTY OF NAVAL FACILITIES ENGINEERING COMMAND, PREPARED BY TETRA TECH ENGINEERING CORPORATION PC, AND IS PROVIDED UPON THE CONDITION THAT IT WILL NOT BE REPRODUCED, COPIED, OR ISSUED TO A THIRD PARTY, AND WILL BE USED SOLELY FOR THE ORIGINAL INTENDED PURPOSE AND SOLELY FOR THE EXECUTION OR REVIEW OF THE ENGINEERING CONSTRUCTION OF THE PROJECT".

IT IS A VIOLATION OF THE NEW YORK STATE EDUCATION LAW, ARTICLE 145, FOR ANY PERSON, UNLESS UNDER THE DIRECTION OF A NEW YORK STATE LICENSED PROFESSIONAL ENGINEER, TO ALTER AN ITEM ON THIS DOCUMENT IN ANY WAY.

SYM	DESCRIPTION	DATE	APPR

NAVFAC

STATE OF NEW YORK · ANDREW TODD COLE · 085409-1 · LICENSED PROFESSIONAL ENGINEER
04/21/2026 SEAL

TETRA TECH
www.tetratech.com
5700 LAKE WRIGHT DR., SUITE 102
NORFOLK, VA 23502
PHONE: (757) 461-2766 FAX: (757) 461-4148

A/E INFO

APPROVED
FOR COMMANDER NAVFAC

ACTIVITY
As per document from Nicole Coward, NAVFAC MIDLANT PL1/EV3

SATISFACTORY TO DATE 03/24/2026
DCS JAT DRW BRF CHK ATC
PM/DM
BRANCH MANAGER
CHIEF ENG/ARCH
FIRE PROTECTION

DEPARTMENT OF THE NAVY
NAVAL FACILITIES ENGINEERING SYSTEMS COMMAND
RE-108
NAVAL FACILITIES ENGINEERING COMMAND ~ MID-ATLANTIC
NAVAL INDUSTRIAL RESERVE ORDNANCE PLANT
NAVAL WEAPONS INDUSTRIAL RESERVE PLANT BETHPAGE, NEW YORK
BETHPAGE NY PHASE III
GROUNDWATER TREATMENT PLANT
GWTP EXTERIOR PIPE SUPPORT ELEVATIONS

SCALE: AS NOTED
EPROJECT NO.:
CONSTR. CONTR. NO. N62472-99-D-0032
NAVFAC DRAWING NO. 112GO8005
SHEET OF
S-204

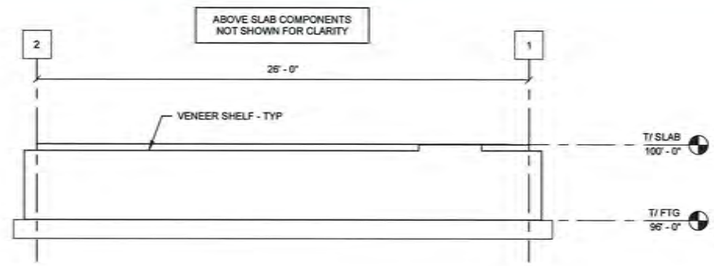

1 S-205 NORTH ELEVATION - OFFICE BUILDING
SCALE: 1/4" = 1'-0"

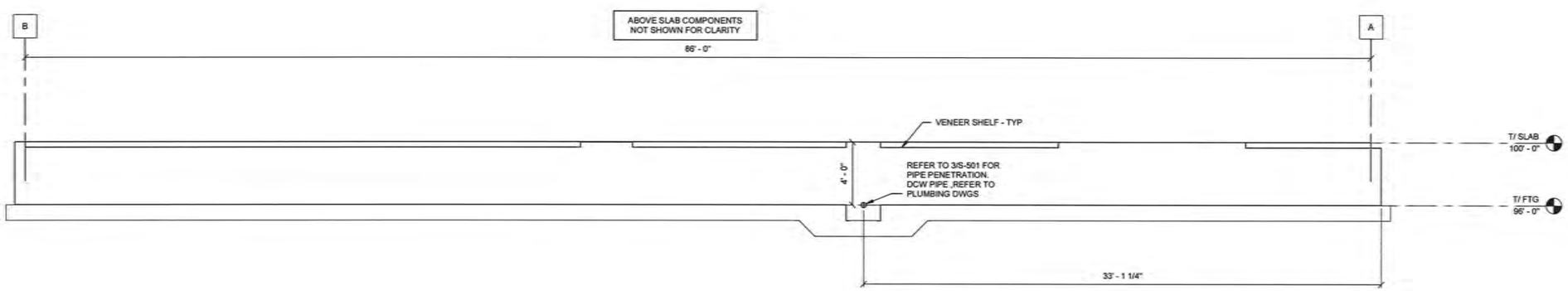

2 S-205 EAST ELEVATION - OFFICE BUILDING
SCALE: 1/4" = 1'-0"

0 2' 4' 8'
SCALE: 1/4" = 1'-0"

BIDDING INFORMATION: IF THE MORE RECENT UFC 3-301-01, WITH CHANGE 6, DATED 30 JANUARY 2026, IS REQUIRED BY THE CLIENT TO BE THE GOVERNING CODE, STRUCTURAL DESIGN WILL BE REQUIRED TO BE UPDATED TO REFERENCE ASCE 7-22. THIS CHANGE WILL MOST NOTABLY DOUBLE GROUND SNOW LOAD VALUES, INCREASE WIND PRESSURES, AND ALTER VARIOUS OTHER FACTORS OF DESIGN. IF IMPLEMENTED BY THE CLIENT, REVISED STRUCTURAL DOCUMENTS WILL BE PROVIDED AT A FUTURE DATE WITH UPDATED STRUCTURAL INFORMATION.

ISSUED FOR BID - FEBRUARY 2026

THIS DRAWING PRODUCED ON REVIT
DO NOT REVISE MANUALLY

"THIS DOCUMENT IS THE PROPERTY OF NAVAL FACILITIES ENGINEERING COMMAND, PREPARED BY TETRA TECH ENGINEERING CORPORATION PC, AND IS PROVIDED UPON THE CONDITION THAT IT WILL NOT BE REPRODUCED, COPIED, OR ISSUED TO A THIRD PARTY, AND WILL BE USED SOLELY FOR THE ORIGINAL INTENDED PURPOSE AND SOLELY FOR THE EXECUTION OR REVIEW OF THE ENGINEERING CONSTRUCTION OF THE PROJECT".

IT IS A VIOLATION OF THE NEW YORK STATE EDUCATION LAW, ARTICLE 145, FOR ANY PERSON, UNLESS UNDER THE DIRECTION OF A NEW YORK STATE LICENSED PROFESSIONAL ENGINEER, TO ALTER AN ITEM ON THIS DOCUMENT IN ANY WAY.

SYM	DESCRIPTION	DATE	APPR

NAVFAC

STATE OF NEW YORK
ANDREW T. CARTER
085805-1
LICENSED PROFESSIONAL ENGINEER
04/21/2026 SEAL

TETRA TECH
www.tetratech.com
5700 LAKE WRIGHT DR., SUITE 102
NORFOLK, VA 23502
PHONE: (757) 451-3758 FAX: (757) 451-4145

A/E INFO

APPROVED
FOR COMMANDER NAVFAC
ACTIVITY
As per document from Nicole Coward, NAVFAC WQUANT PLL/EVI
SATISFACTORY TO DATE 05/24/2026
DES JAT DRW BRF CHK ATC
PM/DM
BRANCH MANAGER
CHIEF ENG/ARCH
FIRE PROTECTION

DEPARTMENT OF THE NAVY
NAVAL FACILITIES ENGINEERING COMMAND
NAVAL FACILITIES ENGINEERING SYSTEMS COMMAND
NAVAL INDUSTRIAL RESERVE ORDNANCE PLANT
NAVFAC — MID-ATLANTIC
RE: 1089
NAVAL WEAPONS INDUSTRIAL RESERVE PLANT BETHPAGE, NEW YORK
BETHPAGE NY PHASE III
GROUNDWATER TREATMENT PLANT
OFFICE STRUCTURAL BUILDING ELEVATIONS

SCALE: AS NOTED
SPROJECT NO.:
CONSTR. CONTR. NO.
N62472-99-D-0032
NAVFAC DRAWING NO.
112GO8005
SHEET OF
S-205

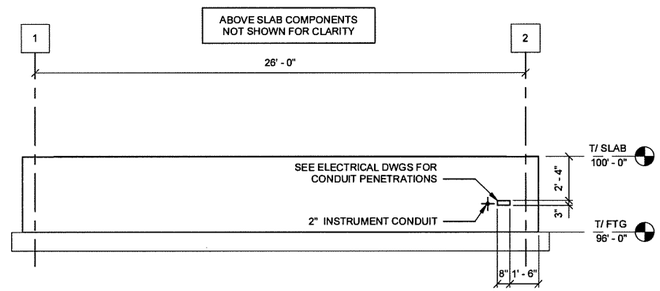

1 S-206 SOUTH ELEVATION - OFFICE BUILDING
SCALE: 1/4" = 1'-0"

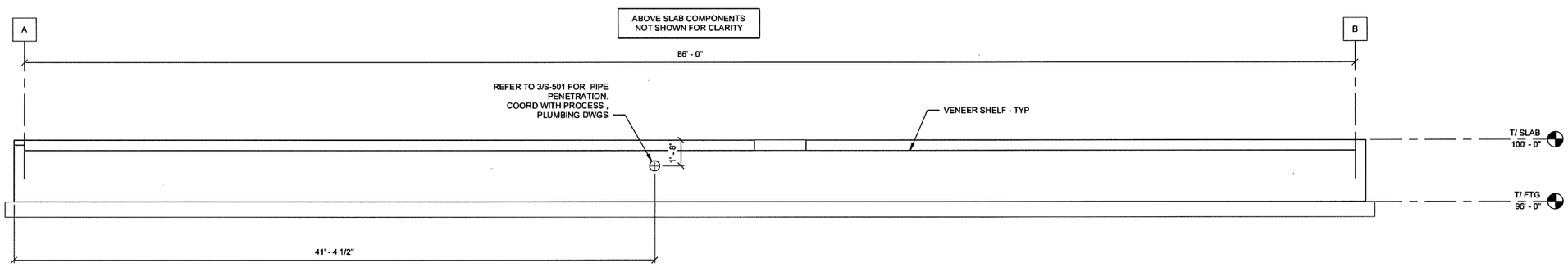

2 S-206 WEST ELEVATION - OFFICE BUILDING
SCALE: 1/4" = 1'-0"

0 2' 4' 8'
SCALE: 1/4" = 1'-0"

BIDDING INFORMATION: IF THE MORE RECENT UFC 3-301-01, WITH CHANGE 8, DATED 30 JANUARY 2026, IS REQUIRED BY THE CLIENT TO BE THE GOVERNING CODE, STRUCTURAL DESIGN WILL BE REQUIRED TO BE UPDATED TO REFERENCE ASCE 7-22. THIS CHANGE WILL MOST NOTABLY DOUBLE GROUND SNOW LOAD VALUES, INCREASE WIND PRESSURES, AND ALTER VARIOUS OTHER FACTORS OF DESIGN. IF IMPLEMENTED BY THE CLIENT, REVISED STRUCTURAL DOCUMENTS WILL BE PROVIDED AT A FUTURE DATE WITH UPDATED STRUCTURAL INFORMATION.

ISSUED FOR BID - FEBRUARY 2026

THIS DRAWING PRODUCED ON REVIT
DO NOT REVISE MANUALLY

"THIS DOCUMENT IS THE PROPERTY OF NAVAL FACILITIES ENGINEERING COMMAND, PREPARED BY TETRA TECH ENGINEERING CORPORATION PC, AND IS PROVIDED UPON THE CONDITION THAT IT WILL NOT BE REPRODUCED, COPIED, OR ISSUED TO A THIRD PARTY, AND WILL BE USED SOLELY FOR THE ORIGINAL INTENDED PURPOSE AND SOLELY FOR THE EXECUTION OR REVIEW OF THE ENGINEERING CONSTRUCTION OF THE PROJECT".

IT IS A VIOLATION OF THE NEW YORK STATE EDUCATION LAW, ARTICLE 145, FOR ANY PERSON, UNLESS UNDER THE DIRECTION OF A NEW YORK STATE LICENSED PROFESSIONAL ENGINEER, TO ALTER AN ITEM ON THIS DOCUMENT IN ANY WAY.

SYM	DESCRIPTION	DATE	APPR

NAVFAC

STATE OF NEW YORK · ANDREW TODD COATS · 084809-1 · LICENSED PROFESSIONAL ENGINEER
04/21/2026 SEAL

TETRA TECH
www.tetratech.com
5700 LAKE WRIGHT DR., SUITE 102
NORFOLK, VA 23502
PHONE: (757) 461-3788 FAX: (757) 461-4148

A/E INFO

APPROVED
FOR COMMANDER NAVFAC

ACTIVITY
As per document from Nicole Cowand, NAVFAC MIDLANT PL1/EV3

SATISFACTORY TO DATE 03/24/2026
DES JAT DRW BRF CHK ATC
PM/DM
BRANCH MANAGER
CHIEF ENG/ARCH
FIRE PROTECTION

DEPARTMENT OF THE NAVY
NAVAL FACILITIES ENGINEERING SYSTEMS COMMAND
RE-109
NAVAL FACILITIES ENGINEERING COMMAND ~ MID-ATLANTIC
NAVAL INDUSTRIAL RESERVE ORDNANCE PLANT
NAVAL WEAPONS INDUSTRIAL RESERVE PLANT BETHPAGE, NEW YORK
BETHPAGE NY PHASE III
GROUNDWATER TREATMENT PLANT
OFFICE STRUCTURAL BUILDING ELEVATIONS

SCALE: AS NOTED
EPROJECT NO.:
CONSTR. CONTR. NO.
N62472-99-D-0032
NAVFAC DRAWING NO.
112GO8005
SHEET OF
S-206

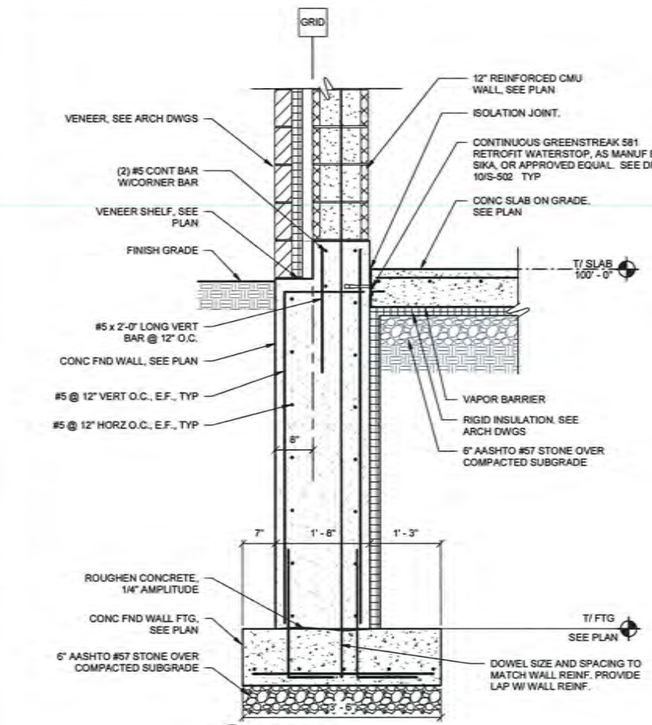

A S-301 SECTION
SCALE: 3/4" = 1'-0"

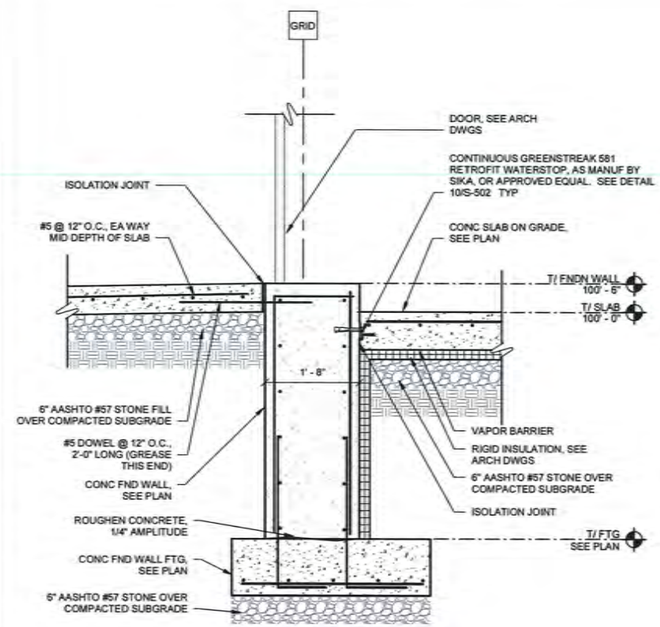

B S-301 SECTION
SCALE: 3/4" = 1'-0"

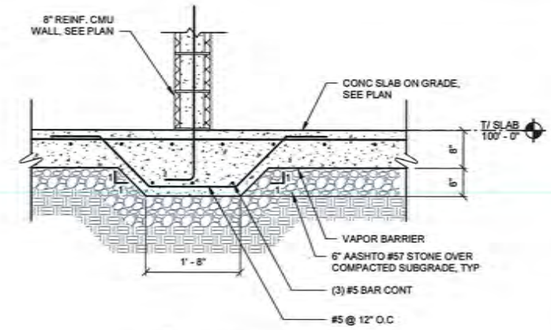

C S-301 SECTION
SCALE: 3/4" = 1'-0"

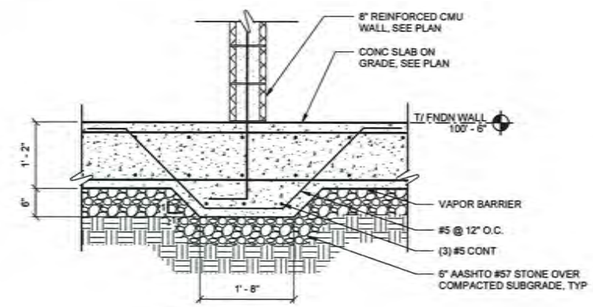

D S-301 SECTION
SCALE: 3/4" = 1'-0"

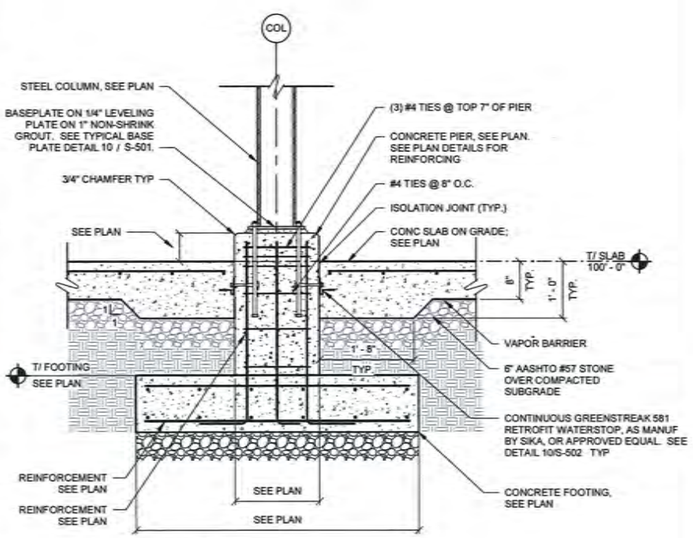

E S-301 SECTION
SCALE: 3/4" = 1'-0"

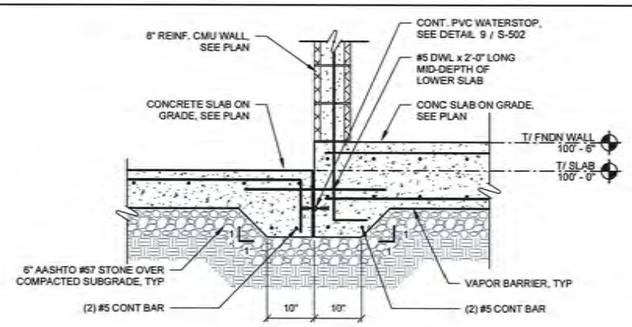

F S-301 SECTION
SCALE: 3/4" = 1'-0"

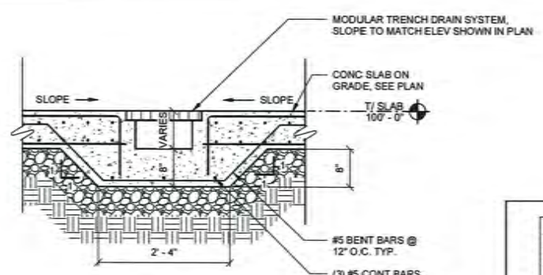

G S-301 SECTION
SCALE: 3/4" = 1'-0"

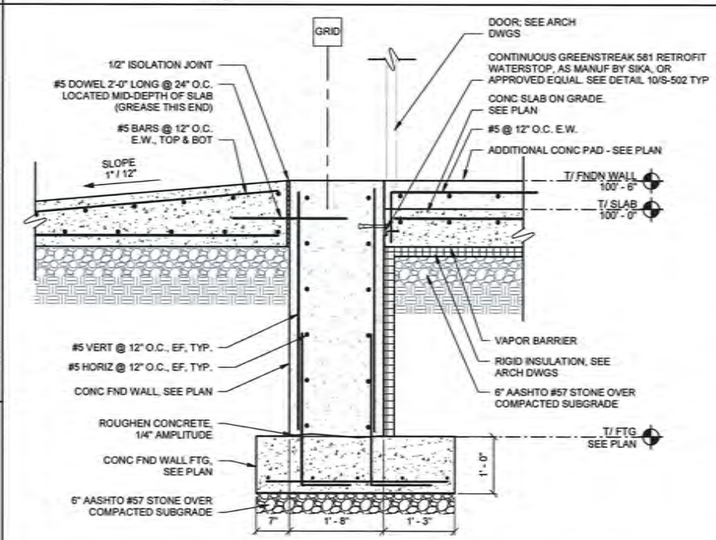

H S-301 SECTION
SCALE: 3/4" = 1'-0"

BIDDING INFORMATION: IF THE MORE RECENT UFC 3-301-01, WITH CHANGE 6, DATED 30 JANUARY 2026, IS REQUIRED BY THE CLIENT TO BE THE GOVERNING CODE, STRUCTURAL DESIGN WILL BE REQUIRED TO BE UPDATED TO REFERENCE ASCE 7-22. THIS CHANGE WILL MOST NOTABLY DOUBLE GROUND SNOW LOAD VALUES, INCREASE WIND PRESSURES, AND ALTER VARIOUS OTHER FACTORS OF DESIGN. IF IMPLEMENTED BY THE CLIENT, REVISED STRUCTURAL DOCUMENTS WILL BE PROVIDED AT A FUTURE DATE WITH UPDATED STRUCTURAL INFORMATION.

0 8" 1'-4" 2'-8"
SCALE: 3/4" = 1'-0"

ISSUED FOR BID - FEBRUARY 2026

THIS DRAWING PRODUCED ON REVIT
DO NOT REVISE MANUALLY

"THIS DOCUMENT IS THE PROPERTY OF NAVAL FACILITIES ENGINEERING COMMAND, PREPARED BY TETRA TECH ENGINEERING CORPORATION PC, AND IS PROVIDED UPON THE CONDITION THAT IT WILL NOT BE REPRODUCED, COPIED, OR ISSUED TO A THIRD PARTY, AND WILL BE USED SOLELY FOR THE ORIGINAL INTENDED PURPOSE AND SOLELY FOR THE EXECUTION OR REVIEW OF THE ENGINEERING CONSTRUCTION OF THE PROJECT".

IT IS A VIOLATION OF THE NEW YORK STATE EDUCATION LAW, ARTICLE 145, FOR ANY PERSON, UNLESS UNDER THE DIRECTION OF A NEW YORK STATE LICENSED PROFESSIONAL ENGINEER, TO ALTER AN ITEM ON THIS DOCUMENT IN ANY WAY.

SYM	DESCRIPTION	DATE	APPR

NAVFAC

STATE OF NEW YORK — ANDREW TOM CARTER — 085803-1 — LICENSED PROFESSIONAL ENGINEER
04/21/2026

TETRA TECH
www.tetratech.com
5700 LAKE WRIGHT DR., SUITE 102
NORFOLK, VA 23502
PHONE: (757) 451-3756 FAX: (757) 451-4148

A/E INFO

APPROVED
TDR COMMANDER NAVFAC

ACTIVITY
As per document from Nicole Coward, NAVFAC MIDLANT PLL/EXS

SATISFACTORY TO DATE 03/24/2026

DES	DRW	CHK
JAT	BRF	ATC

PM/DM
BRANCH MANAGER
CHIEF ENG/ARCH
FIRE PROTECTION

DEPARTMENT OF THE NAVY
NAVAL FACILITIES ENGINEERING COMMAND
RE-108
NAVAL FACILITIES ENGINEERING SYSTEMS COMMAND
NAVAL INDUSTRIAL RESERVE ORDNANCE PLANT
NAVAL WEAPONS INDUSTRIAL RESERVE PLANT BETHPAGE, NEW YORK
BETHPAGE NY PHASE III
GROUNDWATER TREATMENT PLANT
GWTP STRUCTURAL FOUNDATION SECTIONS

SCALE: AS NOTED
EPROJECT NO.
CONSTR. CONTR. NO. N62472-99-D-0032
NAVFAC DRAWING NO. 112GO8005
SHEET OF
S-301

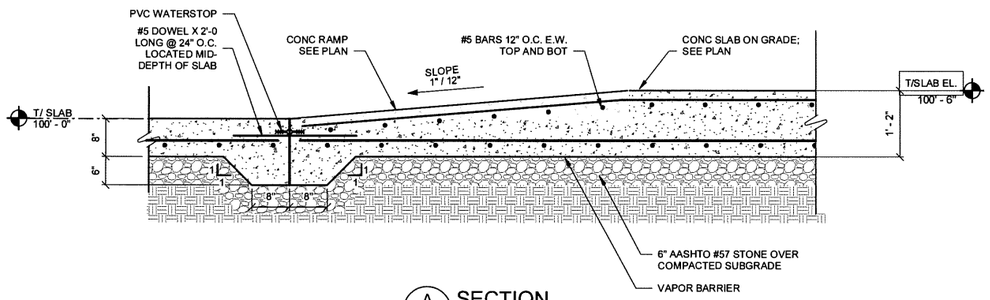

A S-302 SECTION
SCALE: 3/4" = 1'-0"

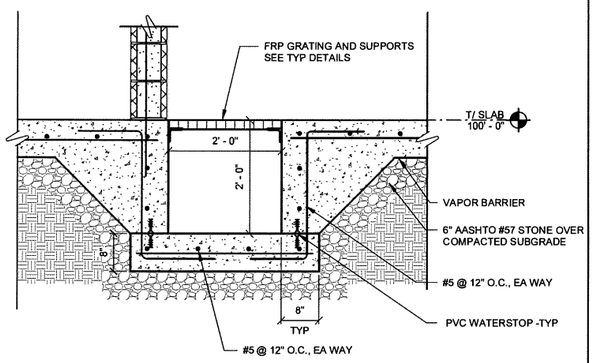

C S-302 SECTION
SCALE: 3/4" = 1'-0"

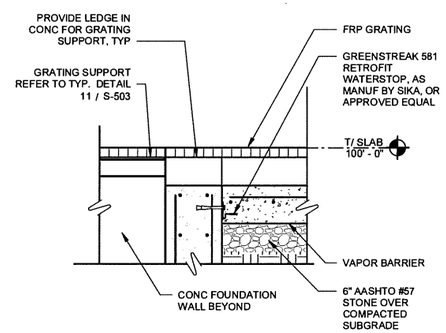

D S-302 SECTION
SCALE: 3/4" = 1'-0"

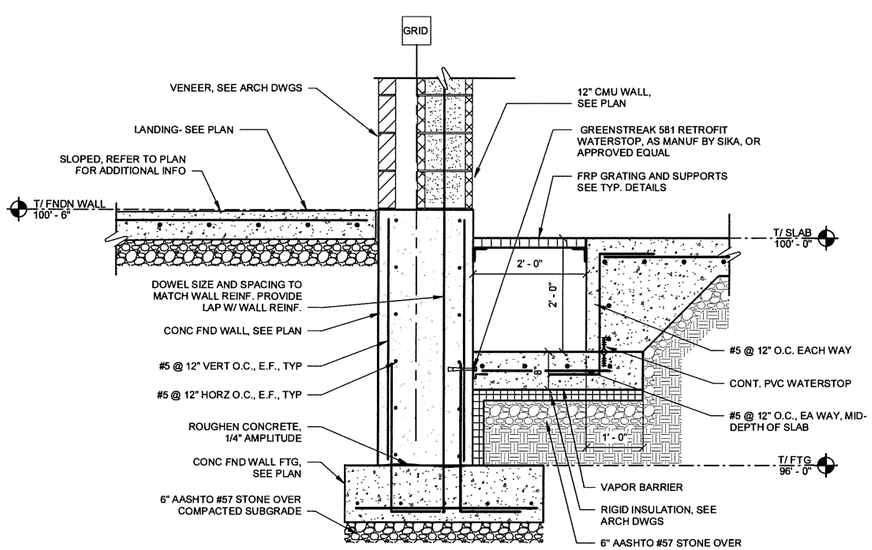

E S-302 SECTION
SCALE: 3/4" = 1'-0"

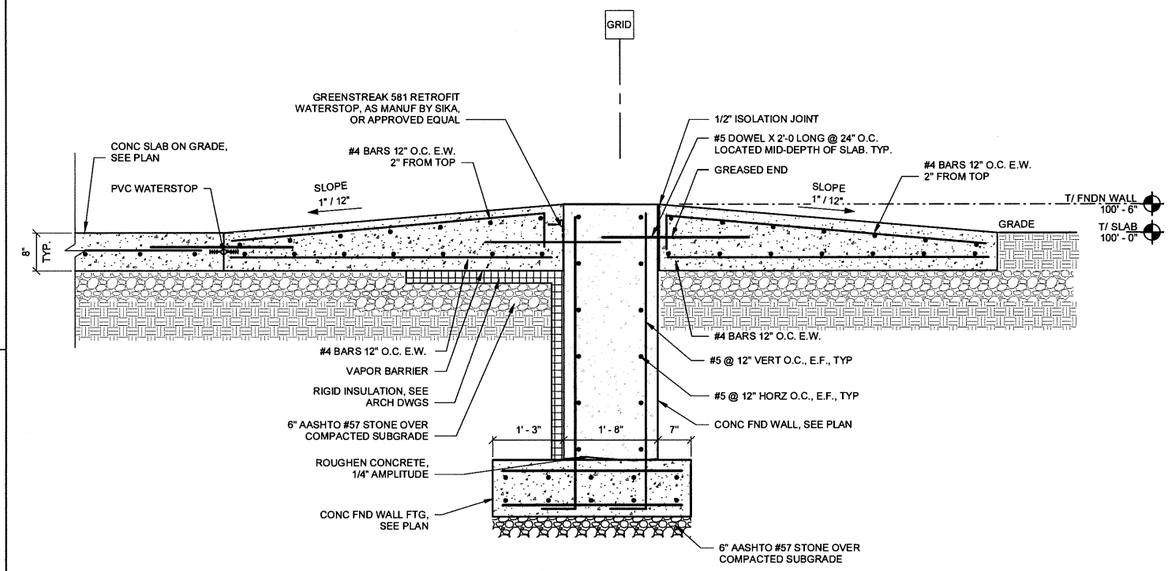

B S-302 SECTION
SCALE: 3/4" = 1'-0"

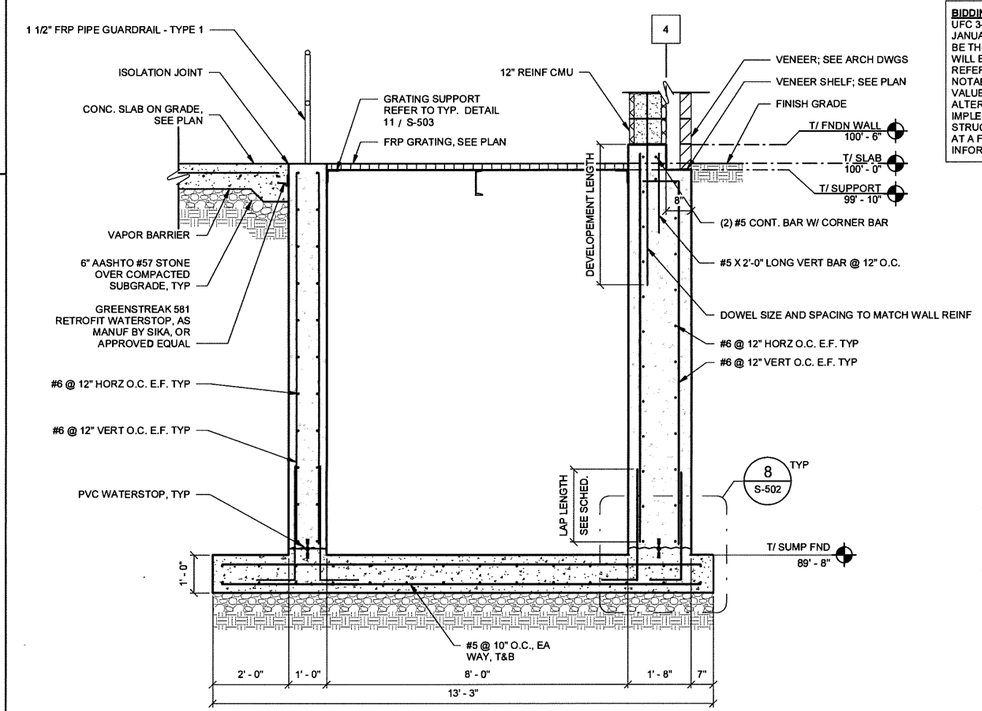

F S-302 SECTION
SCALE: 1/2" = 1'-0"

BIDDING INFORMATION: IF THE MORE RECENT UFC 3-301-01, WITH CHANGE 6, DATED 30 JANUARY 2026, IS REQUIRED BY THE CLIENT TO BE THE GOVERNING CODE, STRUCTURAL DESIGN WILL BE REQUIRED TO BE UPDATED TO REFERENCE ASCE 7-22. THIS CHANGE WILL MOST NOTABLY DOUBLE GROUND SNOW LOAD VALUES, INCREASE WIND PRESSURES, AND ALTER VARIOUS OTHER FACTORS OF DESIGN. IF IMPLEMENTED BY THE CLIENT, REVISED STRUCTURAL DOCUMENTS WILL BE PROVIDED AT A FUTURE DATE WITH UPDATED STRUCTURAL INFORMATION.

0 1' 2' 4'
SCALE: 1/2" = 1'-0"

0 8" 1'-4" 2'-8"
SCALE: 3/4" = 1'-0"

THIS DRAWING PRODUCED ON REVIT
DO NOT REVISE MANUALLY

"THIS DOCUMENT IS THE PROPERTY OF NAVAL FACILITIES ENGINEERING COMMAND, PREPARED BY TETRA TECH ENGINEERING CORPORATION PC, AND IS PROVIDED UPON THE CONDITION THAT IT WILL NOT BE REPRODUCED, COPIED, OR ISSUED TO A THIRD PARTY, AND WILL BE USED SOLELY FOR THE ORIGINAL INTENDED PURPOSE AND SOLELY FOR THE EXECUTION OR REVIEW OF THE ENGINEERING CONSTRUCTION OF THE PROJECT".

IT IS A VIOLATION OF THE NEW YORK STATE EDUCATION LAW, ARTICLE 145, FOR ANY PERSON, UNLESS UNDER THE DIRECTION OF A NEW YORK STATE LICENSED PROFESSIONAL ENGINEER, TO ALTER AN ITEM ON THIS DOCUMENT IN ANY WAY.

ISSUED FOR BID - FEBRUARY 2026

SYM	DESCRIPTION	DATE	APPR

NAVFAC

STATE OF NEW YORK · ANDREW TODD JONES · 095409-1 · LICENSED PROFESSIONAL ENGINEER
04/21/2026 SEAL

TETRA TECH
www.tetratech.com
5700 LAKE WRIGHT DR., SUITE 102
NORFOLK, VA 23502
PHONE: (757) 461-0788 FAX: (757) 461-4148

A/E INFO

APPROVED
FOR COMMANDER NAVFAC

ACTIVITY
As per document from Nicole Cawand, NAVFAC MIDLANT PL1/EV3
SATISFACTORY TO DATE 03/24/2026

DES JAT DRW BRF CHK ATC
PM/DM
BRANCH MANAGER
CHIEF ENG/ARCH
FIRE PROTECTION

DEPARTMENT OF THE NAVY
NAVAL FACILITIES ENGINEERING SYSTEMS COMMAND
NAVAL FACILITIES ENGINEERING COMMAND ~ MID-ATLANTIC
RE-108
NAVAL INDUSTRIAL RESERVE ORDNANCE PLANT
NAVAL WEAPONS INDUSTRIAL RESERVE PLANT BETHPAGE, NEW YORK
BETHPAGE NY PHASE III
GROUNDWATER TREATMENT PLANT
GWTP STRUCTURAL FOUNDATION SECTIONS

SCALE: AS NOTED
EPROJECT NO.:
CONSTR. CONTR. NO.
N62472-99-D-0032
NAVFAC DRAWING NO.
112GO8005
SHEET OF
S-302

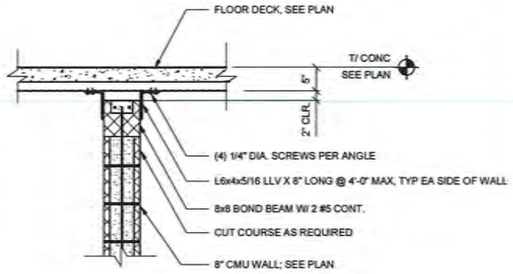

A S-303 SECTION
SCALE: 3/4" = 1'-0"

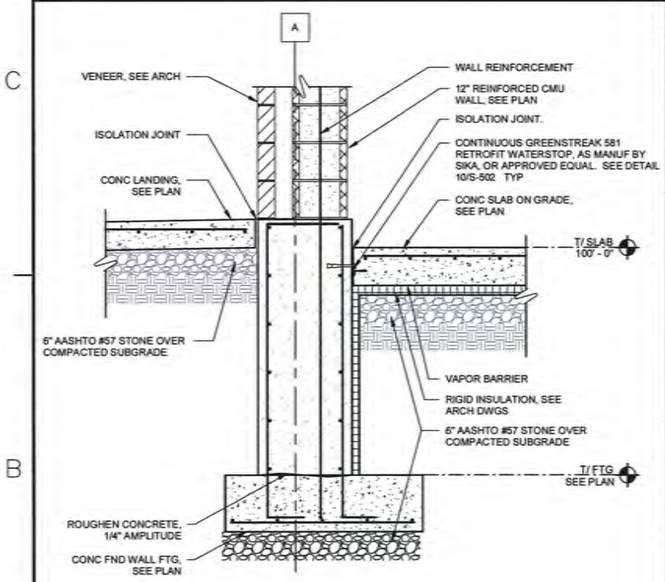

E S-303 SECTION
SCALE: 3/4" = 1'-0"

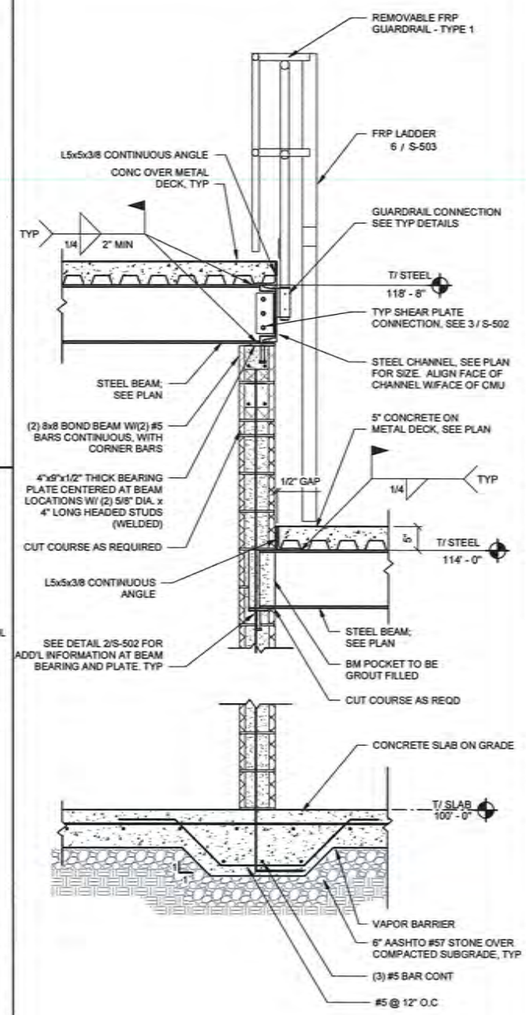

B S-303 SECTION
SCALE: 3/4" = 1'-0"

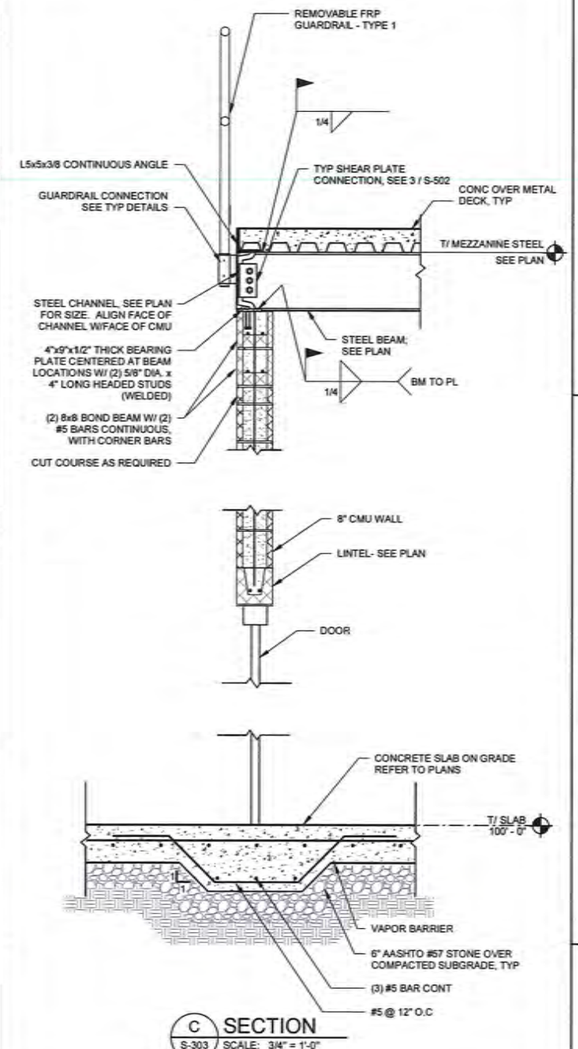

C S-303 SECTION
SCALE: 3/4" = 1'-0"

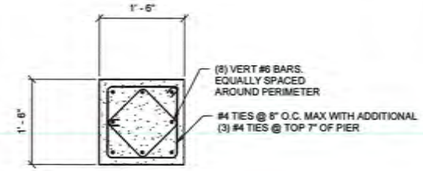

1 S-303 PIER P1 DETAIL
SCALE: 3/4" = 1'-0"

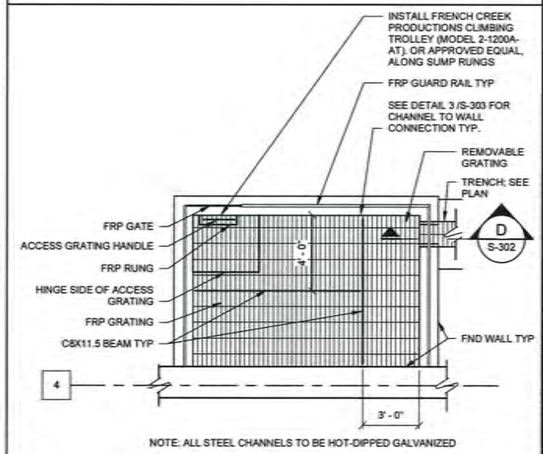

NOTE: ALL STEEL CHANNELS TO BE HOT-DIPPED GALVANIZED

2 S-303 SUMP PLAN
SCALE: 1/4" = 1'-0"

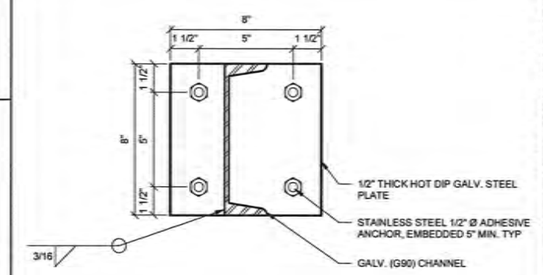

3 S-303 GRATING SUPPORT CHANNEL
SCALE: NTS

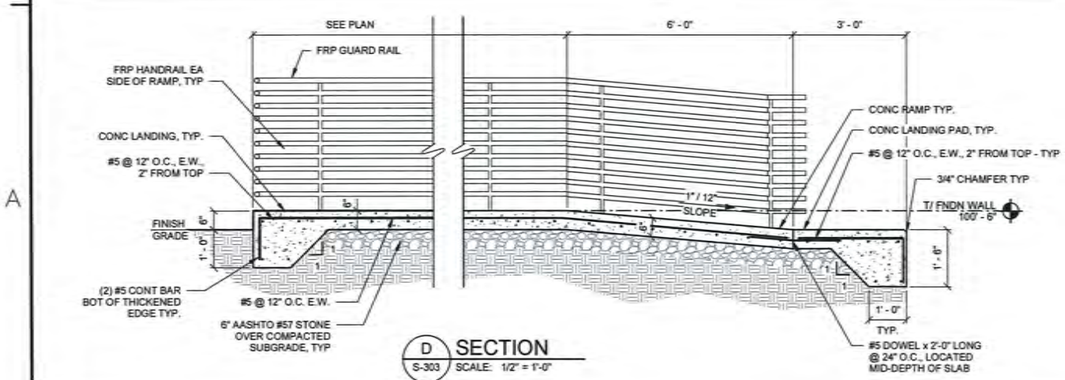

D S-303 SECTION
SCALE: 1/2" = 1'-0"

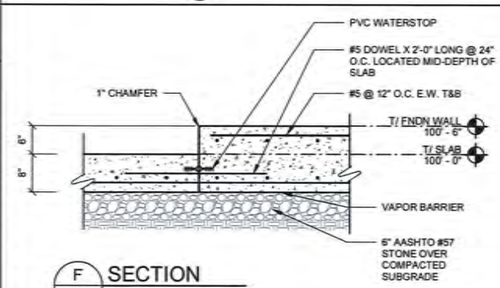

F S-303 SECTION
SCALE: 3/4" = 1'-0"

BIDDING INFORMATION: IF THE MORE RECENT UFC 3-301-01, WITH CHANGE 6, DATED 30 JANUARY 2026, IS REQUIRED BY THE CLIENT TO BE THE GOVERNING CODE, STRUCTURAL DESIGN WILL BE REQUIRED TO BE UPDATED TO REFERENCE ASCE 7-22. THIS CHANGE WILL MOST NOTABLY DOUBLE GROUND SNOW LOAD VALUES, INCREASE WIND PRESSURES, AND ALTER VARIOUS OTHER FACTORS OF DESIGN. IF IMPLEMENTED BY THE CLIENT, REVISED STRUCTURAL DOCUMENTS WILL BE PROVIDED AT A FUTURE DATE WITH UPDATED STRUCTURAL INFORMATION.

0 2' 4' 8'
SCALE: 1/4" = 1'-0"

0 1' 2' 4'
SCALE: 1/2" = 1'-0"

0 8" 1'-4" 2'-8"
SCALE: 3/4" = 1'-0"

ISSUED FOR BID - FEBRUARY 2026

THIS DRAWING PRODUCED ON REVIT
DO NOT REVISE MANUALLY

"THIS DOCUMENT IS THE PROPERTY OF NAVAL FACILITIES ENGINEERING COMMAND, PREPARED BY TETRA TECH ENGINEERING CORPORATION PC, AND IS PROVIDED UPON THE CONDITION THAT IT WILL NOT BE REPRODUCED, COPIED, OR ISSUED TO A THIRD PARTY, AND WILL BE USED SOLELY FOR THE ORIGINAL INTENDED PURPOSE AND SOLELY FOR THE EXECUTION OR REVIEW OF THE ENGINEERING CONSTRUCTION OF THE PROJECT".

IT IS A VIOLATION OF THE NEW YORK STATE EDUCATION LAW, ARTICLE 145, FOR ANY PERSON, UNLESS UNDER THE DIRECTION OF A NEW YORK STATE LICENSED PROFESSIONAL ENGINEER, TO ALTER AN ITEM ON THIS DOCUMENT IN ANY WAY.

SYM	DESCRIPTION	DATE	APPR

NAVFAC

STATE OF NEW YORK — LICENSED PROFESSIONAL ENGINEER — 085805-1
04/21/2026

TETRA TECH
www.tetratech.com
5700 LAKE WRIGHT DR., SUITE 100
NORFOLK, VA 23502
PHONE: (757) 461-5100 FAX: (757) 461-4148

A/E WO

APPROVED
FOR COMMANDER NAVFAC

ACTIVITY
As per document from Nicole Coward, NAVFAC MIDLANT PLL/EVO

SATISFACTORY TO DATE 03/24/2026

DES	DRN	CHK
JAT	BRF	ATC

PM/DM
BRANCH MANAGER
CHIEF ENG/ARCH
FIRE PROTECTION

DEPARTMENT OF THE NAVY
NAVAL FACILITIES ENGINEERING COMMAND – MID-ATLANTIC
NAVAL INDUSTRIAL RESERVE ORDNANCE PLANT
NAVAL WEAPONS INDUSTRIAL RESERVE PLANT BETHPAGE, NEW YORK
BETHPAGE NY PHASE III
GROUNDWATER TREATMENT PLANT
GWTP STRUCTURAL FOUNDATION SECTIONS

RE-105

SCALE: AS NOTED
SPROJECT NO.
CONTR. CONTR. NO.
N62472-99-D-0032
NAVFAC DRAWING NO.
112GO8005
SHEET OF
S-303

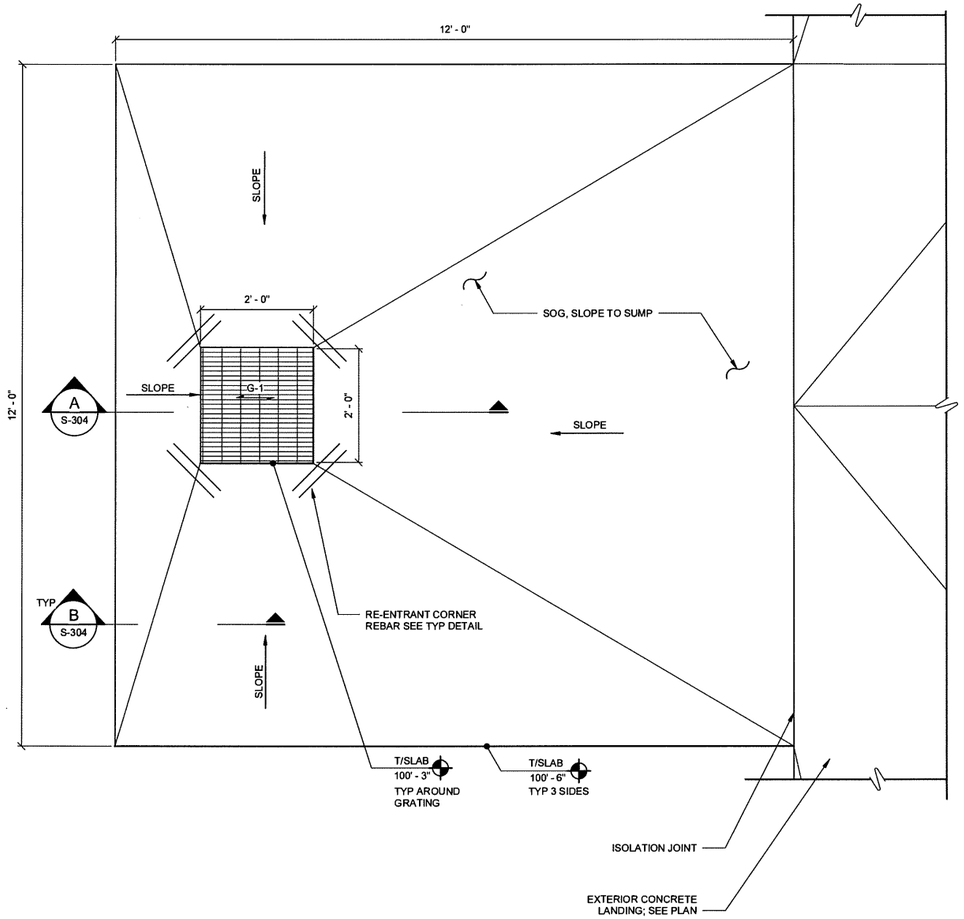

1 S-304 TRUCK PAD PLAN

SCALE: 3/4" = 1'-0"

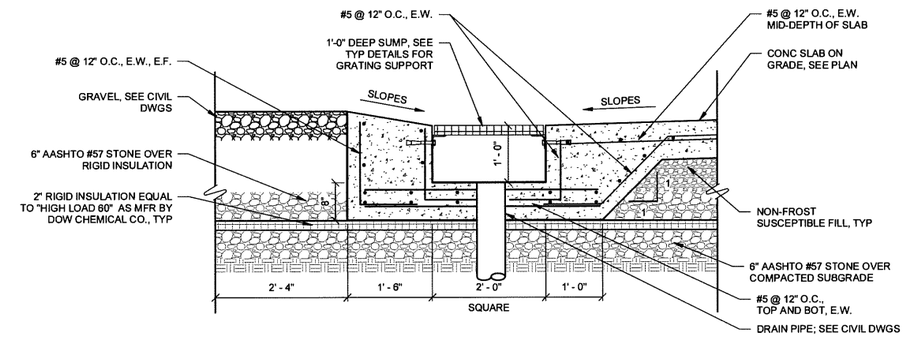

A S-304 SUMP SECTION

SCALE: 3/4" = 1'-0"

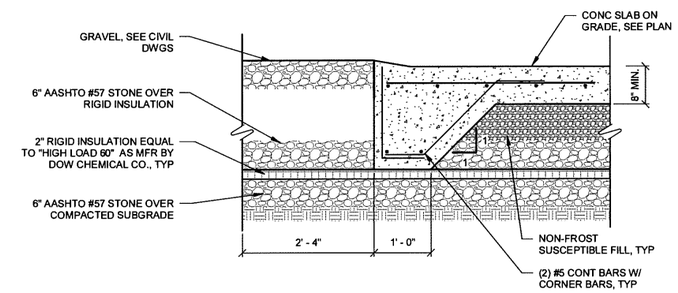

B S-304 THICKENED EDGE SECTION

SCALE: 3/4" = 1'-0"

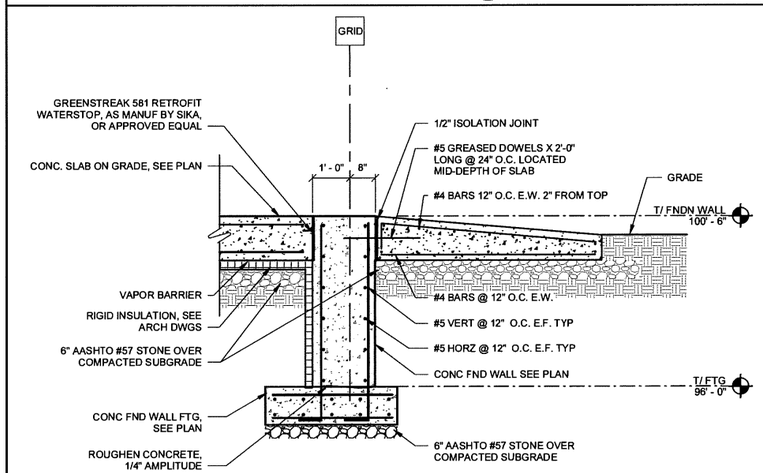

C S-304 SECTION

SCALE: 1/2" = 1'-0"

0 1' 2' 4'
SCALE: 1/2" = 1'-0"

0 8" 1'-4" 2'-8"
SCALE: 3/4" = 1'-0"

PLAN NOTES:

1. SEE SHEETS S-001,S-002 AND S-003 FOR GENERAL NOTES.
2. APPLY CHEMICAL-RESISTANT EPOXY COATING TO ALL TRUCK LOADING SLAB CONCRETE SURFACES. PRODUCT TO BE SPECIFICALLY DESIGNED FOR EXPOSURE TO A 30% HYDROGEN PEROXIDE SOLUTION. CLEAN, PREPARE SURFACE AND INSTALL COATING PER WRITTEN MANUFACTURER'S INSTRUCTIONS.
3. FRP GRATING TO BE DESIGNED FOR H-20 LOADING.

LEGEND:

SOG — DENOTES 8" SLAB ON GRADE REINF W/ #5 @ 12" O.C, E.W., MID-DEPTH

G-1 — DENOTES SPAN DIRECTION OF FRP GRATING.

DENOTES REMOVABLE FRP GRATING BY DELEGATED DESIGN. SEE GENERAL NOTES SHEET S-003 FOR THICKNESS OF GRATING. IN ADDITION TO DESIGN LOAD REQUIREMENTS ON GENERAL NOTES SHEET, THIS GRATING TO BE DESIGNED FOR H20 TRUCK LOAD. SEE SPECIFICATION.

BIDDING INFORMATION: IF THE MORE RECENT UFC 3-301-01, WITH CHANGE 6, DATED 30 JANUARY 2026, IS REQUIRED BY THE CLIENT TO BE THE GOVERNING CODE, STRUCTURAL DESIGN WILL BE REQUIRED TO BE UPDATED TO REFERENCE ASCE 7-22. THIS CHANGE WILL MOST NOTABLY DOUBLE GROUND SNOW LOAD VALUES, INCREASE WIND PRESSURES, AND ALTER VARIOUS OTHER FACTORS OF DESIGN. IF IMPLEMENTED BY THE CLIENT, REVISED STRUCTURAL DOCUMENTS WILL BE PROVIDED AT A FUTURE DATE WITH UPDATED STRUCTURAL INFORMATION.

ISSUED FOR BID - FEBRUARY 2026

SYM	DESCRIPTION	DATE	APPR

NAVFAC

STATE OF NEW YORK — ANDREW TODD COATS — 085409-1 — LICENSED PROFESSIONAL ENGINEER
04/21/2026 SEAL

TETRA TECH
www.tetratech.com
5700 LAKE WRIGHT DR., SUITE 102
NORFOLK, VA 23502
PHONE: (757) 461-3788 FAX: (757) 461-4148

A/E INFO

APPROVED
FOR COMMANDER NAVFAC

ACTIVITY
As per document from Nicole Coward, NAVFAC MIDLANT PLL/EV3
SATISFACTORY TO DATE 03/24/2026

DES JAT | DRW BRF | CHK ATC
PM/DM
BRANCH MANAGER
CHIEF ENG/ARCH
FIRE PROTECTION

DEPARTMENT OF THE NAVY
NAVAL FACILITIES ENGINEERING SYSTEMS COMMAND
NAVAL FACILITIES ENGINEERING COMMAND ~ MID-ATLANTIC
RE-108
NAVAL INDUSTRIAL RESERVE ORDNANCE PLANT
NAVAL WEAPONS INDUSTRIAL RESERVE PLANT BETHPAGE, NEW YORK
BETHPAGE NY PHASE III
GROUNDWATER TREATMENT PLANT
GWTP STRUCTURAL FOUNDATION SECTIONS

SCALE: AS NOTED
EPROJECT NO.:
CONSTR. CONTR. NO. N62472-99-D-0032
NAVFAC DRAWING NO. 112GO8005
SHEET S-304 OF

THIS DRAWING PRODUCED ON REVIT
DO NOT REVISE MANUALLY

"THIS DOCUMENT IS THE PROPERTY OF NAVAL FACILITIES ENGINEERING COMMAND, PREPARED BY TETRA TECH ENGINEERING CORPORATION PC, AND IS PROVIDED UPON THE CONDITION THAT IT WILL NOT BE REPRODUCED, COPIED, OR ISSUED TO A THIRD PARTY, AND WILL BE USED SOLELY FOR THE ORIGINAL INTENDED PURPOSE AND SOLELY FOR THE EXECUTION OR REVIEW OF THE ENGINEERING CONSTRUCTION OF THE PROJECT".

IT IS A VIOLATION OF THE NEW YORK STATE EDUCATION LAW, ARTICLE 145, FOR ANY PERSON, UNLESS UNDER THE DIRECTION OF A NEW YORK STATE LICENSED PROFESSIONAL ENGINEER, TO ALTER AN ITEM ON THIS DOCUMENT IN ANY WAY.

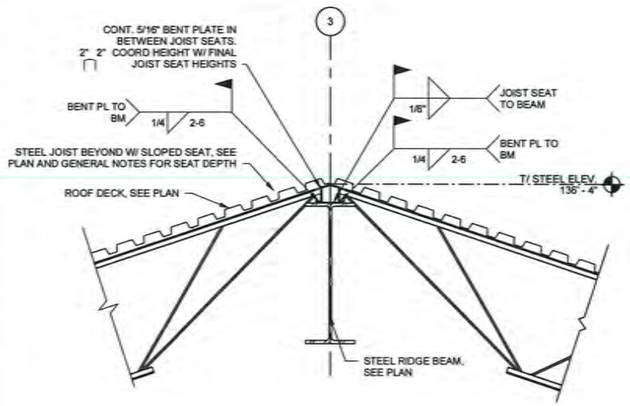

A S-401 SECTION
SCALE: 3/4" = 1'-0"

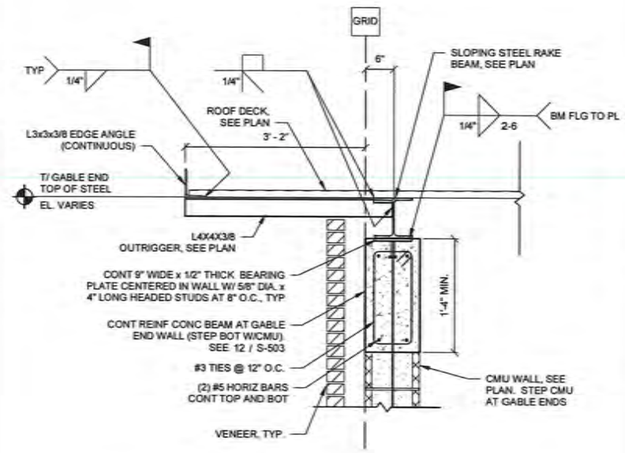

B S-401 SECTION
SCALE: 3/4" = 1'-0"

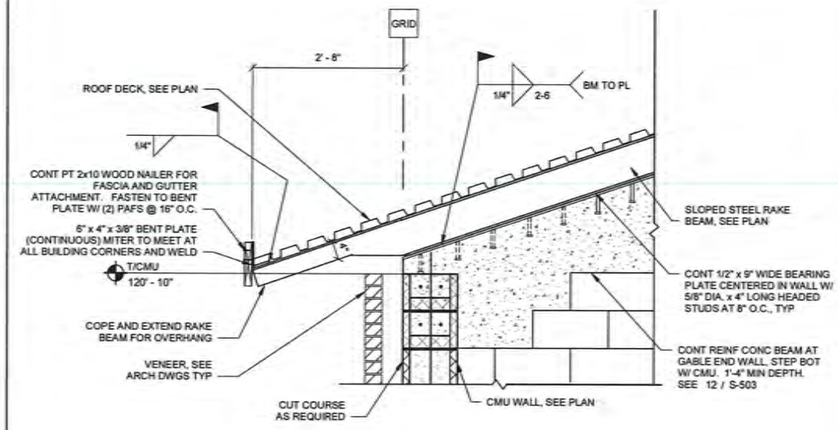

C S-401 SECTION
SCALE: 3/4" = 1'-0"

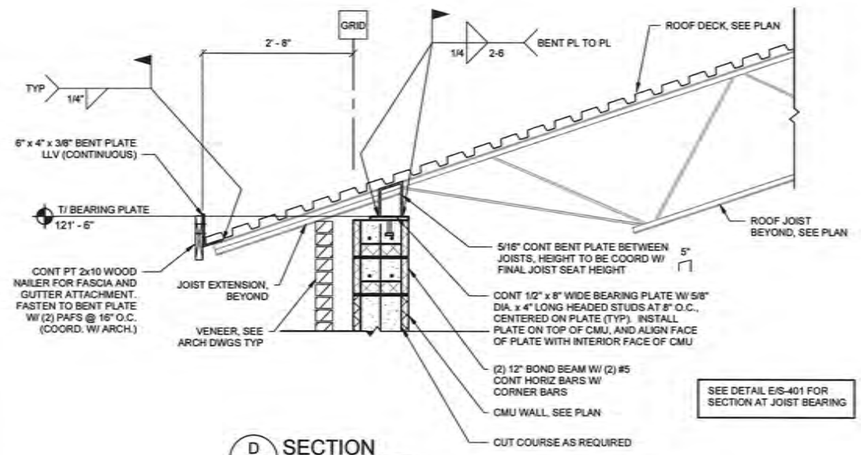

D S-401 SECTION
SCALE: 3/4" = 1'-0"

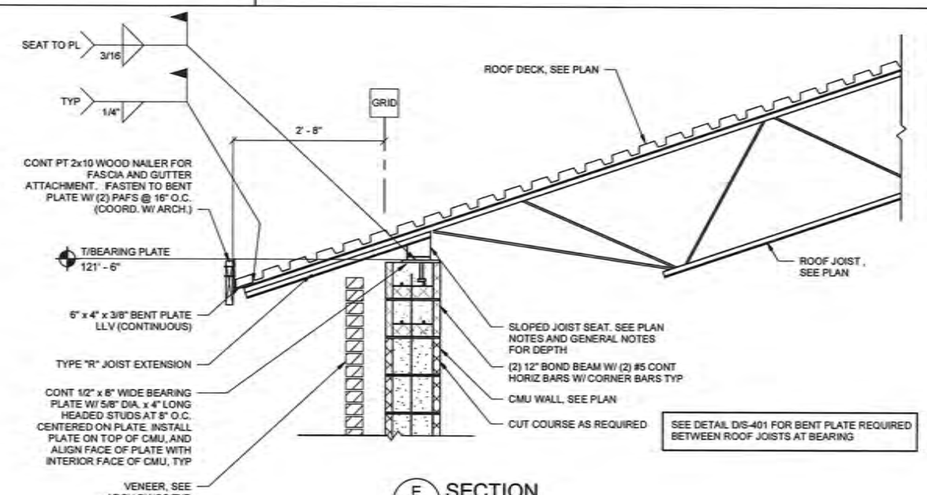

E S-401 SECTION
SCALE: 3/4" = 1'-0"

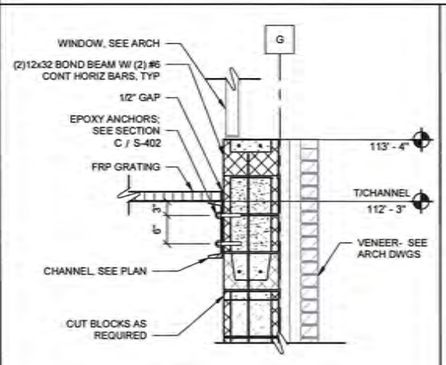

F S-401 SECTION
SCALE: 3/4" = 1'-0"

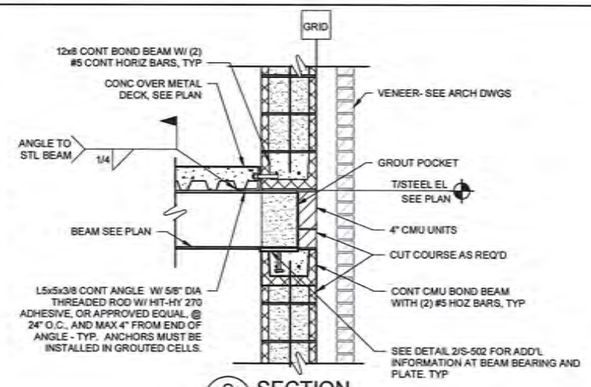

G S-401 SECTION
SCALE: 3/4" = 1'-0"

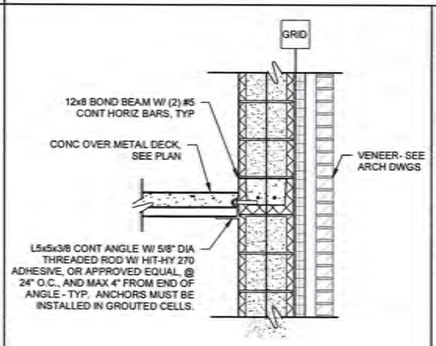

H S-401 SECTION
SCALE: 3/4" = 1'-0"

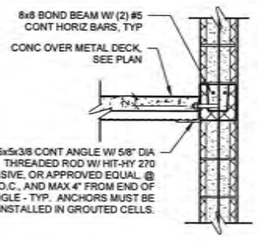

J S-401 SECTION
SCALE: 3/4" = 1'-0"

BIDDING INFORMATION: IF THE MORE RECENT UFC 3-301-01, WITH CHANGE 6, DATED 30 JANUARY 2026, IS REQUIRED BY THE CLIENT TO BE THE GOVERNING CODE, STRUCTURAL DESIGN WILL BE REQUIRED TO BE UPDATED TO REFERENCE ASCE 7-22. THIS CHANGE WILL MOST NOTABLY DOUBLE GROUND SNOW LOAD VALUES, INCREASE WIND PRESSURES, AND ALTER VARIOUS OTHER FACTORS OF DESIGN. IF IMPLEMENTED BY THE CLIENT, REVISED STRUCTURAL DOCUMENTS WILL BE PROVIDED AT A FUTURE DATE WITH UPDATED STRUCTURAL INFORMATION.

0 8" 1'-4" 2'-8"
SCALE: 3/4" = 1'-0"

ISSUED FOR BID - FEBRUARY 2026

THIS DRAWING PRODUCED ON REVIT
DO NOT REVISE MANUALLY

"THIS DOCUMENT IS THE PROPERTY OF NAVAL FACILITIES ENGINEERING COMMAND, PREPARED BY TETRA TECH ENGINEERING CORPORATION PC, AND IS PROVIDED UPON THE CONDITION THAT IT WILL NOT BE REPRODUCED, COPIED, OR ISSUED TO A THIRD PARTY, AND WILL BE USED SOLELY FOR THE ORIGINAL INTENDED PURPOSE AND SOLELY FOR THE EXECUTION OR REVIEW OF THE ENGINEERING CONSTRUCTION OF THE PROJECT".

IT IS A VIOLATION OF THE NEW YORK STATE EDUCATION LAW, ARTICLE 145, FOR ANY PERSON, UNLESS UNDER THE DIRECTION OF A NEW YORK STATE LICENSED PROFESSIONAL ENGINEER, TO ALTER AN ITEM ON THIS DOCUMENT IN ANY WAY.

SYM	DESCRIPTION	DATE	APPR

NAVFAC

STATE OF NEW YORK
ANDREW T. CARTER
LICENSED PROFESSIONAL ENGINEER
04/21/2026

TETRA TECH
www.tetratech.com
5700 LAKE WRIGHT DR., SUITE 100
NORFOLK, VA 23502
PHONE: (757) 461-2700 FAX: (757) 461-4148

A/E INFO

APPROVED
FOR COMMANDER NAVFAC

ACTION
As per document from Nicole Coward, NAVFAC MIDLANT PLL/EVS
SATISFACTORY TO DATE 03/24/2026

DES JAT DRW BRF CHK ATC
PM/DM
BRANCH MANAGER
CHIEF ENG/ARCH
FIRE PROTECTION

DEPARTMENT OF THE NAVY
NAVAL FACILITIES ENGINEERING COMMAND – MID-ATLANTIC
NAVAL FACILITIES ENGINEERING SYSTEMS COMMAND
NAVAL INDUSTRIAL RESERVE ORDNANCE PLANT
RE-108
NAVAL WEAPONS INDUSTRIAL RESERVE PLANT BETHPAGE, NEW YORK
BETHPAGE NY PHASE III
GROUNDWATER TREATMENT PLANT
GWTP STRUCTURAL FRAMING SECTIONS

SCALE: AS NOTED
EPROJECT NO.
CONSTR. CONTR. NO. N62472-99-D-0032
NAVFAC DRAWING NO. 112GO8005
SHEET S-401 OF

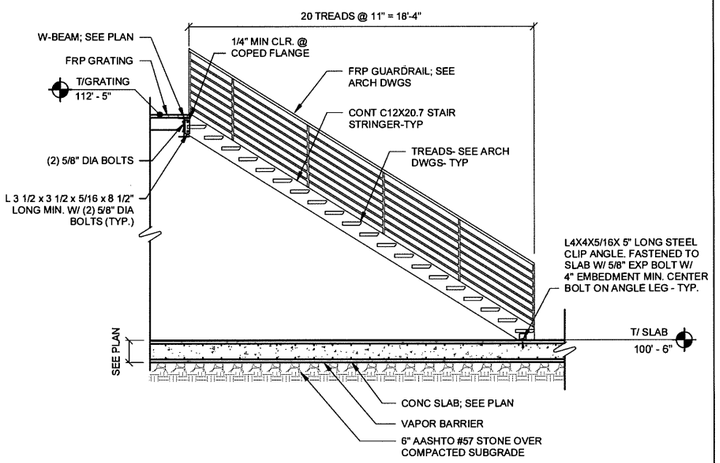

A S-402 SECTION
SCALE: 1/4" = 1'-0"

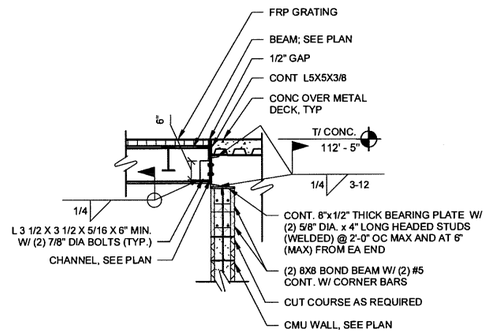

B S-402 SECTION
SCALE: 1/2" = 1'-0"

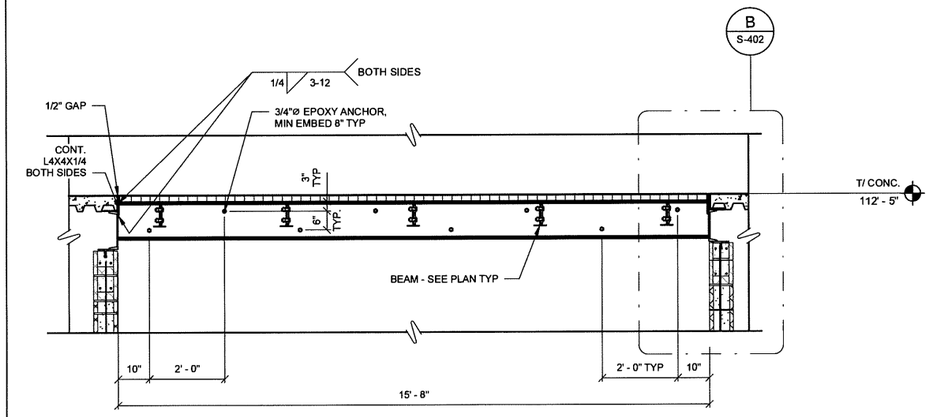

C S-402 SECTION
SCALE: 1/2" = 1'-0"

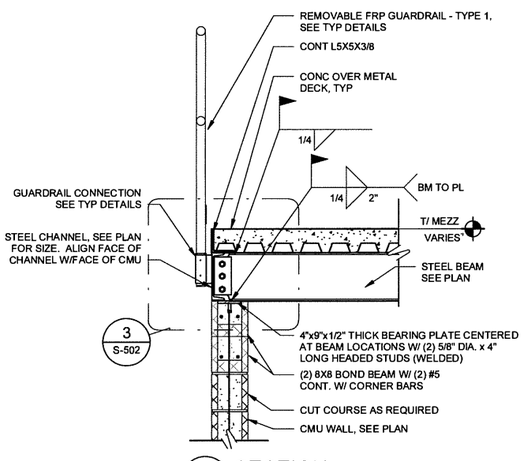

D S-402 SECTION
SCALE: 3/4" = 1'-0"

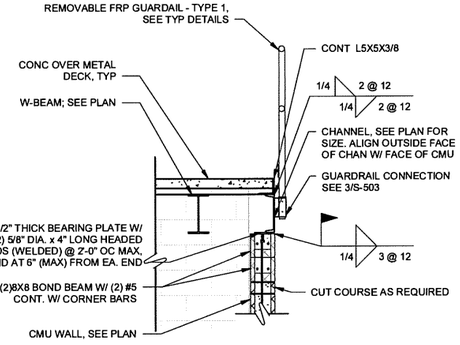

E S-402 SECTION
SCALE: 1/2" = 1'-0"

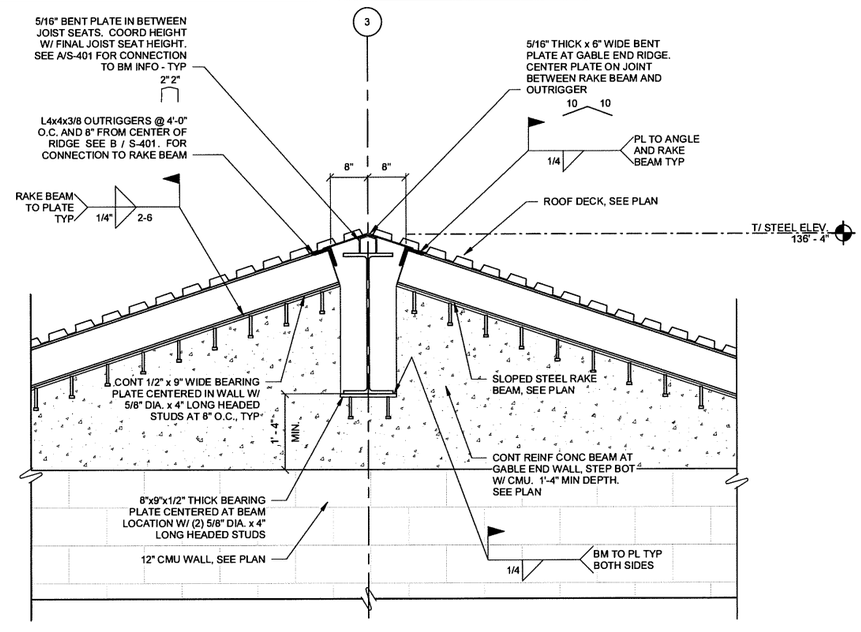

F S-402 SECTION
SCALE: 3/4" = 1'-0"

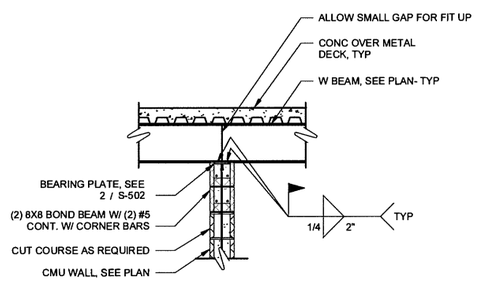

G S-402 SECTION
SCALE: 1/2" = 1'-0"

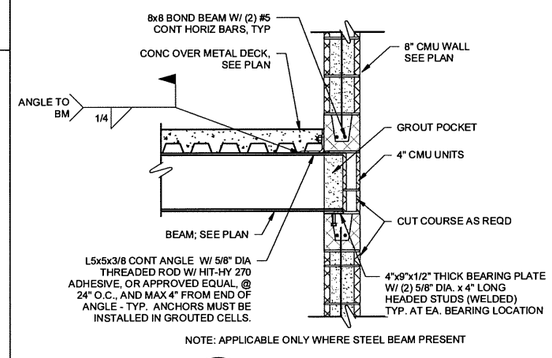

NOTE: APPLICABLE ONLY WHERE STEEL BEAM PRESENT

H S-402 SECTION
SCALE: 3/4" = 1'-0"

BIDDING INFORMATION: IF THE MORE RECENT UFC 3-301-01, WITH CHANGE 6, DATED 30 JANUARY 2026, IS REQUIRED BY THE CLIENT TO BE THE GOVERNING CODE, STRUCTURAL DESIGN WILL BE REQUIRED TO BE UPDATED TO REFERENCE ASCE 7-22. THIS CHANGE WILL MOST NOTABLY DOUBLE GROUND SNOW LOAD VALUES, INCREASE WIND PRESSURES, AND ALTER VARIOUS OTHER FACTORS OF DESIGN. IF IMPLEMENTED BY THE CLIENT, REVISED STRUCTURAL DOCUMENTS WILL BE PROVIDED AT A FUTURE DATE WITH UPDATED STRUCTURAL INFORMATION.

0 1' 2' 4'
SCALE: 1/2" = 1'-0"

0 8" 1'-4" 2'-8"
SCALE: 3/4" = 1'-0"

0 2' 4' 8'
SCALE: 1/4" = 1'-0"

0 1/2' 1' 2'
SCALE: 1" = 1'-0"

ISSUED FOR BID - FEBRUARY 2026

THIS DRAWING PRODUCED ON REVIT
DO NOT REVISE MANUALLY

"THIS DOCUMENT IS THE PROPERTY OF NAVAL FACILITIES ENGINEERING COMMAND, PREPARED BY TETRA TECH ENGINEERING CORPORATION PC, AND IS PROVIDED UPON THE CONDITION THAT IT WILL NOT BE REPRODUCED, COPIED, OR ISSUED TO A THIRD PARTY, AND WILL BE USED SOLELY FOR THE EXECUTION OR REVIEW OF THE ENGINEERING CONSTRUCTION OF THE PROJECT".

IT IS A VIOLATION OF THE NEW YORK STATE EDUCATION LAW, ARTICLE 145, FOR ANY PERSON, UNLESS UNDER THE DIRECTION OF A NEW YORK STATE LICENSED PROFESSIONAL ENGINEER, TO ALTER AN ITEM ON THIS DOCUMENT IN ANY WAY.

SYM	DESCRIPTION	DATE	APPR

NAVFAC

STATE OF NEW YORK · ANDREW T. CROKE · 080409-1 · LICENSED PROFESSIONAL ENGINEER
04/21/2026 SEAL

TETRA TECH
www.tetratech.com
5700 LAKE WRIGHT DR., SUITE 102
NORFOLK, VA 23502
PHONE: (757) 461-3788 FAX: (757) 461-4148

A/E INFO

APPROVED
FOR COMMANDER NAVFAC

ACTIVITY
As per document from Nicole Coward, NAVFAC MIDLANT PLL/EV3

SATISFACTORY TO DATE 03/24/2026
DES JAT DRW BRF CHK ATC
PM/DM
BRANCH MANAGER
CHIEF ENG/ARCH
FIRE PROTECTION

DEPARTMENT OF THE NAVY
NAVAL FACILITIES ENGINEERING SYSTEMS COMMAND
NAVAL FACILITIES ENGINEERING COMMAND ~ MID-ATLANTIC
NAVAL INDUSTRIAL RESERVE ORDNANCE PLANT
RE-108
NAVAL WEAPONS INDUSTRIAL RESERVE PLANT BETHPAGE, NEW YORK
BETHPAGE NY PHASE III
GROUNDWATER TREATMENT PLANT
GWTP STRUCTURAL FRAMING SECTIONS

SCALE: AS NOTED
EPROJECT NO.:
CONSTR. CONTR. NO.
N62472-99-D-0032
NAVFAC DRAWING NO.
112GO8005
SHEET OF
S-402

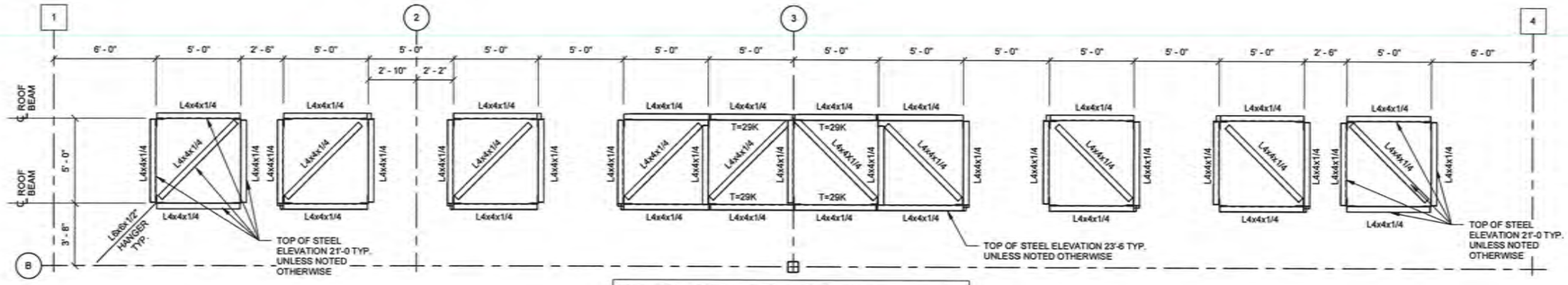

NOTE: FOR THE CONNECTION DESIGN OF MEMBERS WITHOUT A LOAD SHOWN; SEE NOTE 4

1 / S-403 INTERIOR PIPE SUPPORT TOP FRAMING PLAN TOP

SCALE: 1/4" = 1'-0"

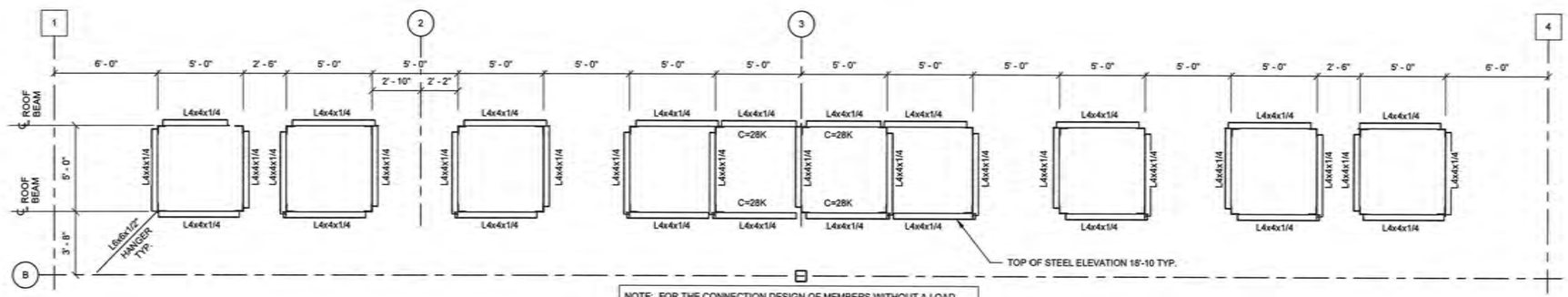

NOTE: FOR THE CONNECTION DESIGN OF MEMBERS WITHOUT A LOAD SHOWN; SEE NOTE 4

2 / S-403 INTERIOR PIPE SUPPORT LOWER FRAMING PLAN

SCALE: 1/4" = 1'-0"

NOTES:

1. CONNECTION DETAILS NOT COMPLETELY DETAILED ON THE DRAWINGS INCLUDING MATERIAL GRADE AND SIZES, WELD SIZES, AND NUMBER OF BOLTS SHALL BE DESIGNED BY THE CONTRACTOR PER THE SPECIFICATIONS. CONCEPTUAL CONNECTION DETAILS WITH THE REQUIRED MEMBER DESIGN FORCES ARE SHOWN ON THE DRAWINGS
   A. C = XXK DENOTES AXIAL COMPRESSION FORCE (KIPS)
   B. T = XXK DENOTES AXIAL TENSION FORCE (KIPS)
2. SEE SHEETS S-001, S-002, AND S-003 FOR GENERAL NOTES. SIZE AND QUANTITY OF TEMPORARY BRACING THAT MAY BE REQUIRED TO BE DETERMINED BY CONTRACTOR'S STEEL ERECTOR
3. ALTERNATIVE CONNECTIONS SHALL BE ALLOWED WITH APPROVAL OF THE STRUCTURAL ENGINEER OF RECORD OR CONTRACTING OFFICER. CONNECTION TO BE DESIGNED UNDER SUPERVISION OF A REGISTERED STRUCTURAL ENGINEER. SUBMIT DESIGN CALCULATIONS BEARING DESIGN ENGINEER'S PROFESSIONAL SEAL AND SIGNATURE.
4. CONNECTIONS SHALL BE DESIGNED FOR (+/-) 15 KIPS OF A COMBINED AXIAL AND SHEAR FORCE AND (+/-) 15 KIPS AXIAL MINIMUM FOR ALL TRUSS WEB CONNECTIONS REGARDLESS OF VALUE NOTED ON THE DRAWINGS.
5. INDICATED FORCES ARE SERVICE LEVEL LOADS. REDUCTION OF INDICATED FORCES IS NOT PERMITTED.
6. INDICATED FORCES ARE FROM THE LOAD COMBINATION THAT CONTROLLED THE DESIGN OF THAT PARTICULAR STRUCTURAL MEMBER. DESIGN OF STRUCTURAL MEMBERS AT COMMON CONNECTION POINTS MIGHT BE CONTROLLED BY DIFFERENT LOAD COMBINATIONS.
7. STEEL CONTRACTOR TO DESIGN AND DETAIL CONNECTIONS USING AISC FIFTEENTH EDITION, ANSI/AISC 360 CONNECTION DETAILS INDICATED FOR ILLUSTRATICE PUROSES ONLY. DO NOT SCALE GUSSET PLATES, STIFFENER PLATES, OR OTHER CONNECTION ELEMENTS FROM DRAWINGS
8. DESIGN ALL BOLTED CONNECTIONS AS SLIP CRITICAL TO THE REQUIREMENTS OF AISC. NO LESS THAN TWO BOLTS SHALL BE USED FOR CONNECTING MEMBERS TOGETHER.
9. ADD GUSSET PLATES AS REQUIRED
10. CHANNELS DESIGNED TO SUPPORT A LOAD OF 250 LBF/FT OF PIPE TRAVELING BETWEEN SUPPORTS OR AN EQUIVALENT LOAD OF 1,250 LBF AT THE CENTER OF THE BOTTOM CHANNEL.

SYM	DESCRIPTION	DATE	APPR

NAVFAC

STATE OF NEW YORK — ANDREW T. CHOI — 088603 — LICENSED PROFESSIONAL ENGINEER

04/21/2026

TETRA TECH

A/E INFO

APPROVED

FOR COMMANDER NAVFAC

ACTIVITY

As per document from Nicole Cowand, NAVFAC MIDLANT PLL/EXD.

SATISFACTORY TO DATE 03/24/2026

DES Designer DRW Author CHK Checker

PM/CM

BRANCH MANAGER

CHIEF ENG/ARCH

FIRE PROTECTION

SCALE: 1/4" = 1'-0"

0 2' 4' 8'

BIDDING INFORMATION: IF THE MORE RECENT UFC 3-301-01, WITH CHANGE 6, DATED 30 JANUARY 2026, IS REQUIRED BY THE CLIENT TO BE THE GOVERNING CODE, STRUCTURAL DESIGN WILL BE REQUIRED TO BE UPDATED TO REFERENCE ASCE 7-22. THIS CHANGE WILL MOST NOTABLY DOUBLE GROUND SNOW LOAD VALUES, INCREASE WIND PRESSURES, AND ALTER VARIOUS OTHER FACTORS OF DESIGN. IF IMPLEMENTED BY THE CLIENT, REVISED STRUCTURAL DOCUMENTS WILL BE PROVIDED AT A FUTURE DATE WITH UPDATED STRUCTURAL INFORMATION.

ISSUED FOR BID - FEBRUARY 2026

THIS DRAWING PRODUCED ON REVIT
DO NOT REVISE MANUALLY

"THIS DOCUMENT IS THE PROPERTY OF NAVAL FACILITIES ENGINEERING COMMAND, PREPARED BY TETRA TECH ENGINEERING CORPORATION PC, AND IS PROVIDED UPON THE CONDITION THAT IT WILL NOT BE REPRODUCED, COPIED, OR ISSUED TO A THIRD PARTY, AND WILL BE USED SOLELY FOR THE ORIGINAL INTENDED PURPOSE AND SOLELY FOR THE EXECUTION OR REVIEW OF THE ENGINEERING CONSTRUCTION OF THE PROJECT".

IT IS A VIOLATION OF THE NEW YORK STATE EDUCATION LAW, ARTICLE 145, FOR ANY PERSON, UNLESS UNDER THE DIRECTION OF A NEW YORK STATE LICENSED PROFESSIONAL ENGINEER, TO ALTER AN ITEM ON THIS DOCUMENT IN ANY WAY.

DEPARTMENT OF THE NAVY
NAVAL FACILITIES ENGINEERING COMMAND
NAVAL FACILITIES ENGINEERING SYSTEMS COMMAND
NAVFAC – MID-ATLANTIC
NAVAL INDUSTRIAL RESERVE ORDNANCE PLANT
RE-108
NAVAL WEAPONS INDUSTRIAL RESERVE PLANT BETHPAGE, NEW YORK
BETHPAGE NY PHASE III
GROUNDWATER TREATMENT PLANT
INTERIOR PIPE SUPPORT FRAMING PLANS

SCALE: AS NOTED

EPROJECT NO.

CONSTR. CONTR. NO.
N62472-99-D-0032

NAVFAC DRAWING NO.
112GO8005

SHEET OF
S-403

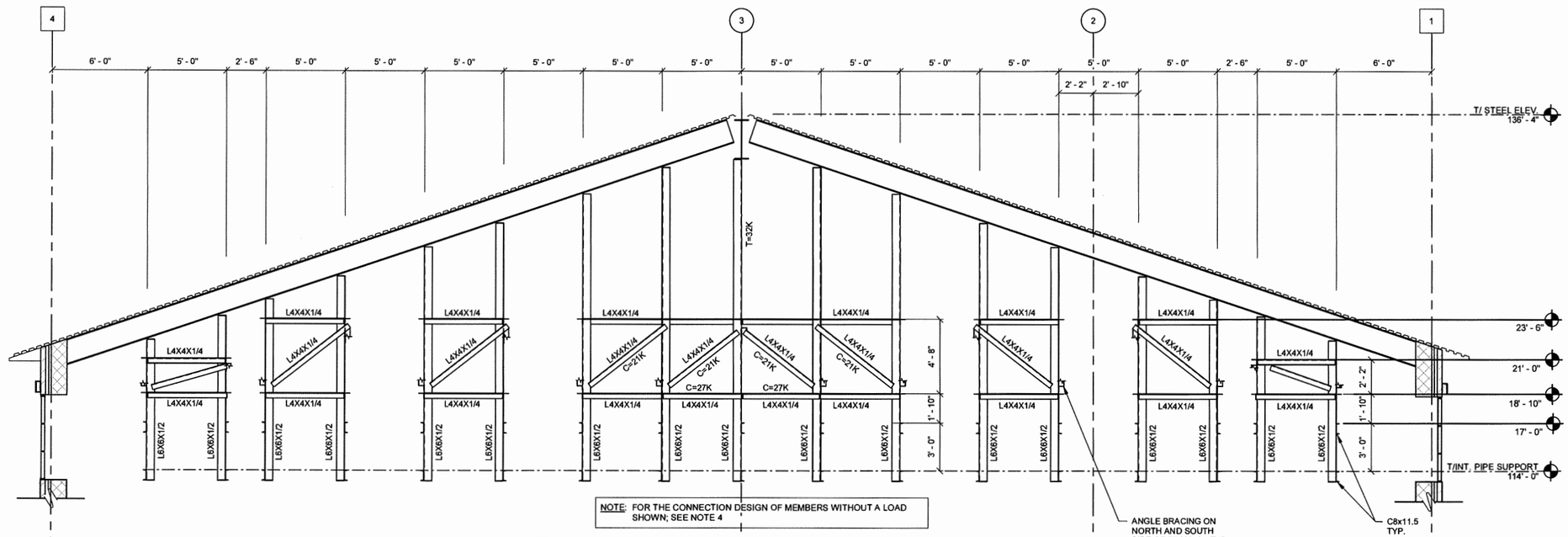

NOTE: FOR THE CONNECTION DESIGN OF MEMBERS WITHOUT A LOAD SHOWN; SEE NOTE 4

1 / S-404 INTERIOR PIPE SUPPORT FRAMING ELEVATION

SCALE: 1/4" = 1'-0"

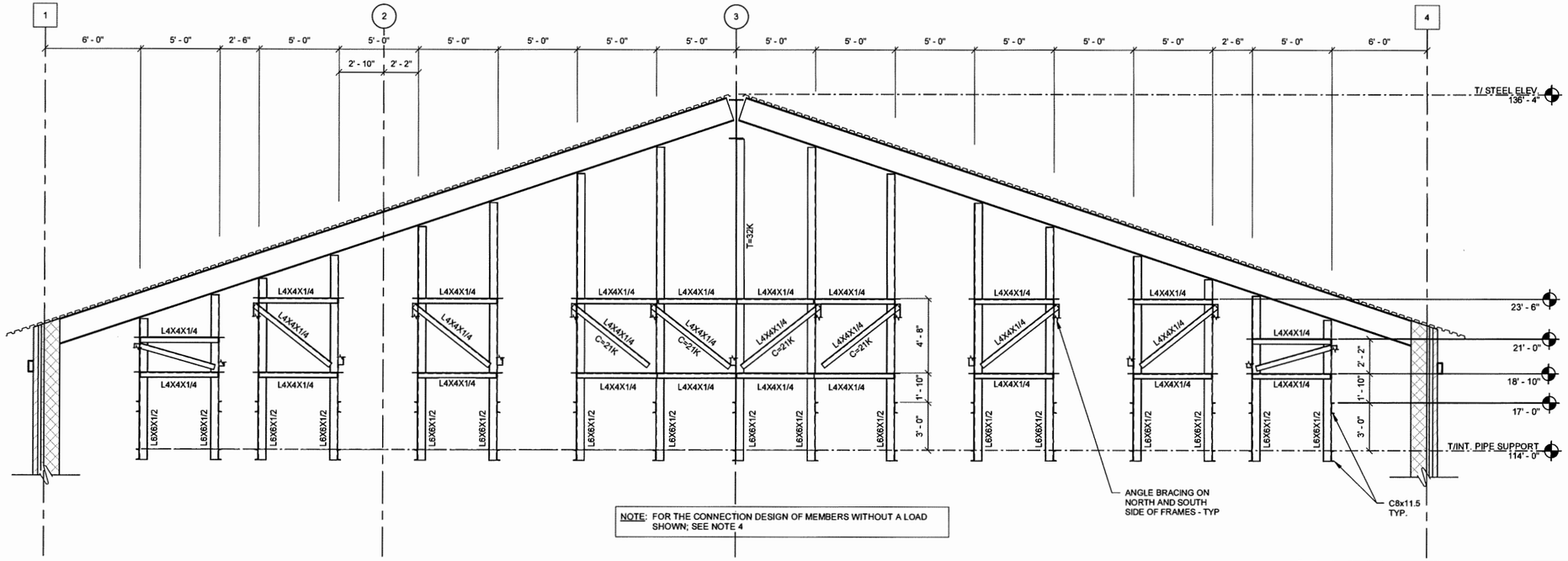

NOTE: FOR THE CONNECTION DESIGN OF MEMBERS WITHOUT A LOAD SHOWN; SEE NOTE 4

2 / S-404 INTERIOR PIPE SUPPORT FRAMING ELEVATION

SCALE: 1/4" = 1'-0"

NOTES:

1. CONNECTION DETAILS NOT COMPLETELY DETAILED ON THE DRAWINGS INCLUDING MATERIAL GRADE AND SIZES, WELD SIZES, AND NUMBER OF BOLTS SHALL BE DESIGNED BY THE CONTRACTOR PER THE SPECIFICATIONS. CONCEPTUAL CONNECTION DETAILS WITH THE REQUIRED MEMBER DESIGN FORCES ARE SHOWN ON THE DRAWINGS
   A. C = XXK DENOTES AXIAL COMPRESSION FORCE (KIPS)
   B. T = XXK DENOTES AXIAL TENSION FORCE (KIPS)
2. SEE SHEETS S-001, S-002, AND S-003 FOR GENERAL NOTES. SIZE AND QUANTITY OF TEMPORARY BRACING THAT MAY BE REQUIRED TO BE DETERMINED BY CONTRACTOR'S STEEL ERECTOR
3. ALTERNATIVE CONNECTIONS SHALL BE ALLOWED WITH APPROVAL OF THE STRUCTURAL ENGINEER OF RECORD OR CONTRACTING OFFICER. CONNECTION TO BE DESIGNED UNDER SUPERVISION OF A REGISTERED STRUCTURAL ENGINEER. SUBMIT DESIGN CALCULATIONS BEARING DESIGN ENGINEER'S PROFESSIONAL SEAL AND SIGNATURE.
4. CONNECTIONS SHALL BE DESIGNED FOR (+/-) 15 KIPS OF A COMBINED AXIAL AND SHEAR FORCE AND (+/-) 15 KIPS AXIAL MINIMUM FOR ALL TRUSS WEB CONNECTIONS REGARDLESS OF VALUE NOTED ON THE DRAWINGS.
5. INDICATED FORCES ARE SERVICE LEVEL LOADS. REDUCTION OF INDICATED FORCES IS NOT PERMITTED.
6. INDICATED FORCES ARE FROM THE LOAD COMBINATION THAT CONTROLLED THE DESIGN OF THAT PARTICULAR STRUCTURAL MEMBER. DESIGN OF STRUCTURAL MEMBERS AT COMMON CONNECTION POINTS MIGHT BE CONTROLLED BY DIFFERENT LOAD COMBINATIONS.
7. STEEL CONTRACTOR TO DESIGN AND DETAIL CONNECTIONS USING AISC FIFTEENTH EDITION, ANSI/AISC 360 CONNECTION DETAILS INDICATED FOR ILLUSTRATICE PUROSES ONLY. DO NOT SCALE GUSSET PLATES, STIFFENER PLATES, OR OTHER CONNECTION ELEMENTS FROM DRAWINGS
8. DESIGN ALL BOLTED CONNECTIONS AS SLIP CRITICAL TO THE REQUIREMENTS OF AISC. NO LESS THAN TWO BOLTS SHALL BE USED FOR CONNECTING MEMBERS TOGETHER.
9. ADD GUSSET PLATES AS REQUIRED
10. CHANNELS DESIGNED TO SUPPORT A LOAD OF 250 LBF/FT OF PIPE TRAVELING BETWEEN SUPPORTS OR AN EQUIVALENT LOAD OF 1,250 LBF AT THE CENTER OF THE BOTTOM CHANNEL.

BIDDING INFORMATION: IF THE MORE RECENT UFC 3-301-01, WITH CHANGE 6, DATED 30 JANUARY 2026, IS REQUIRED BY THE CLIENT TO BE THE GOVERNING CODE, STRUCTURAL DESIGN WILL BE REQUIRED TO BE UPDATED TO REFERENCE ASCE 7-22. THIS CHANGE WILL MOST NOTABLY DOUBLE GROUND SNOW LOAD VALUES, INCREASE WIND PRESSURES, AND ALTER VARIOUS OTHER FACTORS OF DESIGN. IF IMPLEMENTED BY THE CLIENT, REVISED STRUCTURAL DOCUMENTS WILL BE PROVIDED AT A FUTURE DATE WITH UPDATED STRUCTURAL INFORMATION.

ISSUED FOR BID - FEBRUARY 2026

THIS DRAWING PRODUCED ON REVIT
DO NOT REVISE MANUALLY

"THIS DOCUMENT IS THE PROPERTY OF NAVAL FACILITIES ENGINEERING COMMAND, PREPARED BY TETRA TECH ENGINEERING CORPORATION PC, AND IS PROVIDED UPON THE CONDITION THAT IT WILL NOT BE REPRODUCED, COPIED, OR ISSUED TO A THIRD PARTY, AND WILL BE USED SOLELY FOR THE ORIGINAL INTENDED PURPOSE AND SOLELY FOR THE EXECUTION OR REVIEW OF THE ENGINEERING CONSTRUCTION OF THE PROJECT".

IT IS A VIOLATION OF THE NEW YORK STATE EDUCATION LAW, ARTICLE 145, FOR ANY PERSON, UNLESS UNDER THE DIRECTION OF A NEW YORK STATE LICENSED PROFESSIONAL ENGINEER, TO ALTER AN ITEM ON THIS DOCUMENT IN ANY WAY.

SYM	DESCRIPTION	DATE	APPR

NAVFAC

STATE OF NEW YORK · ANDREW TODD · 085855-1 · LICENSED PROFESSIONAL ENGINEER

04/21/2026 SEAL

TETRA TECH
www.tetratech.com
5700 LAKE WRIGHT DR., SUITE 102
NORFOLK, VA 23502
PHONE: (757) 461-3766 FAX: (757) 461-4148

A/E INFO

APPROVED
FOR COMMANDER NAVFAC

ACTIVITY
As per document from Nicole Cowand, NAVFAC MIDLANT PLL/EV3

SATISFACTORY TO DATE 03/24/2026

DES Designer | DRW Author | CHK Checker

PM/DM
BRANCH MANAGER
CHIEF ENG/ARCH
FIRE PROTECTION

DEPARTMENT OF THE NAVY
NAVAL FACILITIES ENGINEERING SYSTEMS COMMAND
NAVAL FACILITIES ENGINEERING COMMAND ~ MID-ATLANTIC
NAVAL INDUSTRIAL RESERVE ORDNANCE PLANT
RE-108
NAVAL WEAPONS INDUSTRIAL RESERVE PLANT BETHPAGE, NEW YORK
BETHPAGE NY PHASE III
GROUNDWATER TREATMENT PLANT
INTERIOR PIPE SUPPORT FRAMING ELEVATIONS

SCALE: AS NOTED
EPROJECT NO.:
CONSTR. CONTR. NO. N62472-99-D-0032
NAVFAC DRAWING NO. 112G08005
SHEET S-404 OF

NOTIFICATION: THIS PAGE CONTAINS SENSITIVE BUT UNCLASSIFIED INFORMATION WHICH IS PROTECTED BY THE FREEDOM OF INFORMATION ACT

EXEMPTION 3. (5 USC 552(b)(3))

Information exempted by other statutes

10 USC Section 130(e) Treatment of Certain Critical Infrastructure Security Information

Page

TO REQUEST A COPY OF THE DOCUMENT PLEASE CONTACT

Department of the Navy
Freedom of Information Act Office

http://www.secnav.navy.mil/foia/Pages/default.aspx

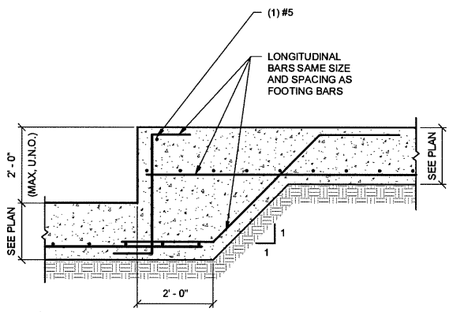

1 S-501 STEPPED FOOTING DETAIL
SCALE: NTS

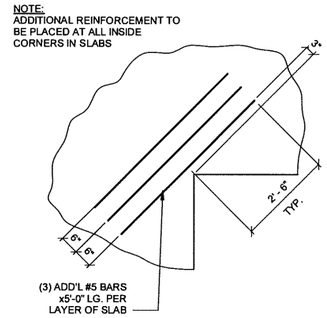

2 S-501 REINF. SLAB RE-ENTRANT CORNER
SCALE: NTS

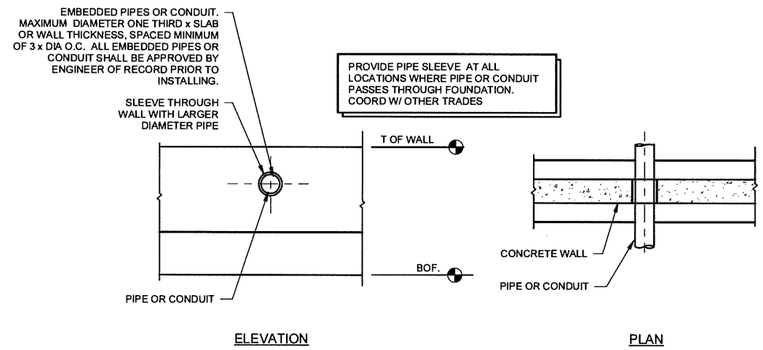

3 S-501 TYP. PIPE THROUGH WALL
SCALE: NTS

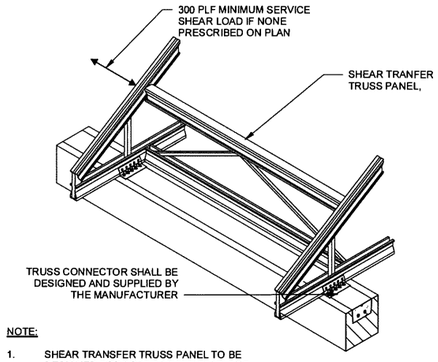

NOTE:
1. SHEAR TRANSFER TRUSS PANEL TO BE DESIGNED FOR LOADS LISTED ON PLANS.

4 S-501 TYP. BLOCKING DETAIL
SCALE: NTS

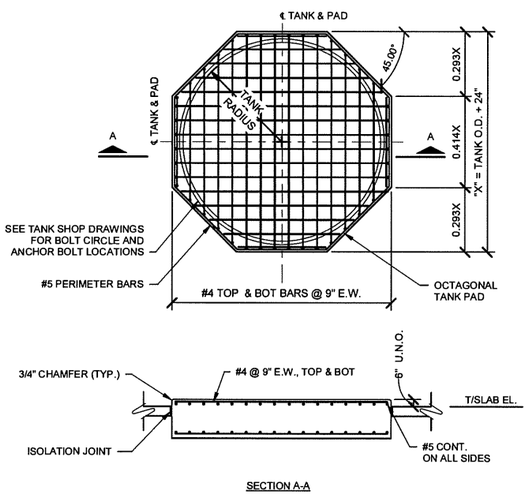

5 S-501 TYP. ISOLATED OCTAGONAL TANK PAD
SCALE: NTS

BIDDING INFORMATION: IF THE MORE RECENT UFC 3-301-01, WITH CHANGE 6, DATED 30 JANUARY 2026, IS REQUIRED BY THE CLIENT TO BE THE GOVERNING CODE, STRUCTURAL DESIGN WILL BE REQUIRED TO BE UPDATED TO REFERENCE ASCE 7-22. THIS CHANGE WILL MOST NOTABLY DOUBLE GROUND SNOW LOAD VALUES, INCREASE WIND PRESSURES, AND ALTER VARIOUS OTHER FACTORS OF DESIGN. IF IMPLEMENTED BY THE CLIENT, REVISED STRUCTURAL DOCUMENTS WILL BE PROVIDED AT A FUTURE DATE WITH UPDATED STRUCTURAL INFORMATION.

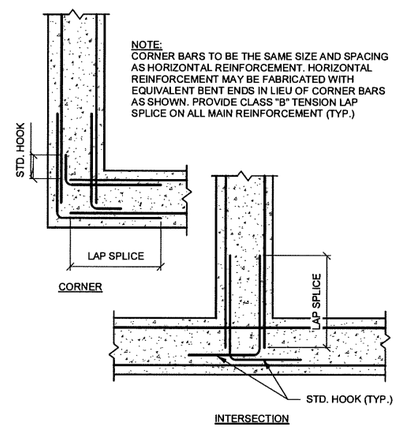

6 S-501 TYP WALL CORNER AT UNDERGROUND SUMP STRUCTURE
SCALE: NTS

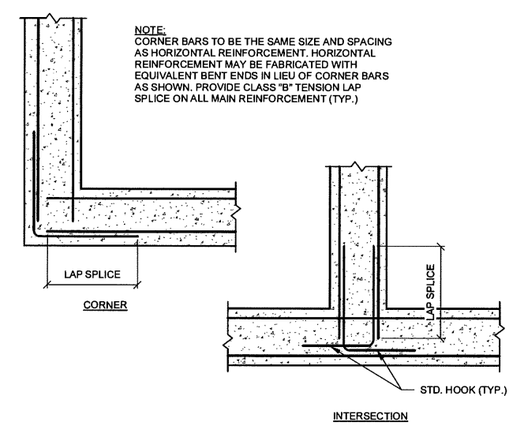

7 S-501 WALL/ FTG CORNERS @ BLDG WALLS
SCALE: NTS

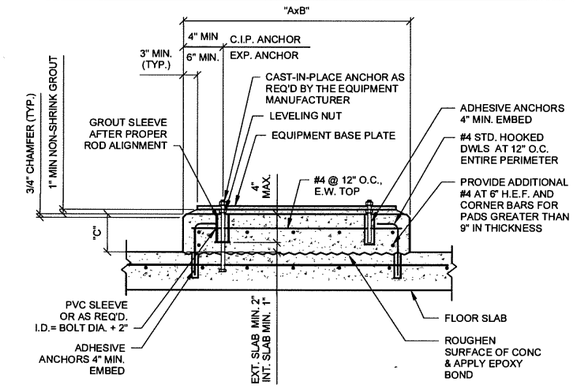

NOTE:
"A","B" & "C" DIMS. AS REQ'D TO SUIT EQUIPMENT. ("C" = 6" TYP. U.N.O.)

8 S-501 TYP. EQUIPMENT PAD
SCALE: NTS

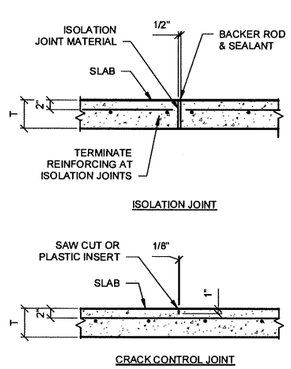

9 S-501 TYP. REINF SLAB DETAILS
SCALE: NTS

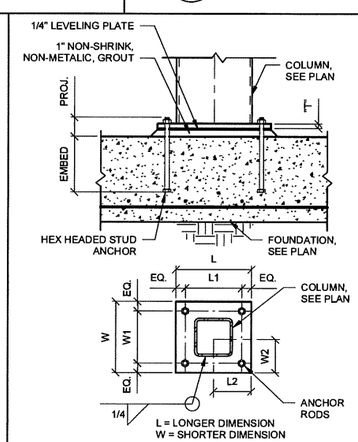

BP-1

BASEPLATE								ANCHOR ROD		
MARK	L	L1	L2	W	W1	W2	"T"	SIZE	EMBED.	PROJ.
BP-1	1'-1"	10"	6 1/2"	1'-1"	10"	6 1/2"	3/4"	3/4" C.I.P	12"	6"

ANCHOR RODS SHALL BE CAST-IN-PLACE AND SHALL CONFORM TO ASTM F1554, GRADE 55, WELDABLE

ALL CAST-IN-PLACE ANCHOR RODS SHALL BE STRAIGHT BOLTS W/ HEX HEADED STUD ANCHORS

HOLE SIZES FOR ANCHOR RODS ARE NORMALLY MADE OVERSIZE TO FACILITATE ERECTION
BOLTS 3/4" TO 1" DIA. = 5/16" OVERSIZE
BOLTS 1 1/4" TO 2" DIA. = 1/2" OVERSIZE
BOLTS OVER 2" DIA. = 1" OVERSIZE

10 S-501 BASEPLATE DETAIL W/ SCHEDULE
SCALE: NTS

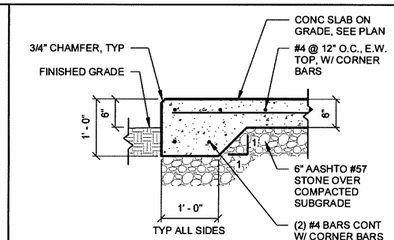

11 S-501 EQUIP PAD EXTERIOR
SCALE: NTS

0 8" 1'-4" 2'-8"
SCALE: 3/4" = 1'-0"

ISSUED FOR BID - FEBRUARY 2026

THIS DRAWING PRODUCED ON REVIT
DO NOT REVISE MANUALLY

"THIS DOCUMENT IS THE PROPERTY OF NAVAL FACILITIES ENGINEERING COMMAND, PREPARED BY TETRA TECH ENGINEERING CORPORATION PC, AND IS PROVIDED UPON THE CONDITION THAT IT WILL NOT BE REPRODUCED, COPIED, OR ISSUED TO A THIRD PARTY, AND WILL BE USED SOLELY FOR THE ORIGINAL INTENDED PURPOSE AND SOLELY FOR THE EXECUTION OR REVIEW OF THE ENGINEERING CONSTRUCTION OF THE PROJECT".

IT IS A VIOLATION OF THE NEW YORK STATE EDUCATION LAW, ARTICLE 145, FOR ANY PERSON, UNLESS UNDER THE DIRECTION OF A NEW YORK STATE LICENSED PROFESSIONAL ENGINEER, TO ALTER AN ITEM ON THIS DOCUMENT IN ANY WAY.

SYM	DESCRIPTION	DATE	APPR

NAVFAC

STATE OF NEW YORK · ANDREW T. CUTLER · 085809-1 · LICENSED PROFESSIONAL ENGINEER
05/05/2022 SEAL

TETRA TECH
www.tetratech.com
5700 LAKE WRIGHT DR., SUITE 102
NORFOLK, VA 23502
PHONE: (757) 461-2958 FAX: (757) 461-4148

A/E INFO

APPROVED
FOR COMMANDER NAVFAC
ACTIVITY
As per document from Nicole Cawond, NAVFAC MIDLANT PL1/CV3
SATISFACTORY TO DATE 03/24/2026
DES JAT DRW BRF CHK ATC
PM/DM
BRANCH MANAGER
CHIEF ENG/ARCH
FIRE PROTECTION

DEPARTMENT OF THE NAVY
NAVAL FACILITIES ENGINEERING SYSTEMS COMMAND
NAVAL FACILITIES ENGINEERING COMMAND ~ MID-ATLANTIC
RE-1189
NAVAL INDUSTRIAL RESERVE ORDNANCE PLANT
NAVAL WEAPONS INDUSTRIAL RESERVE PLANT BETHPAGE, NEW YORK
BETHPAGE NY PHASE III
GROUNDWATER TREATMENT PLANT
STRUCTURAL TYPICAL DETAILS

SCALE: AS NOTED
EPROJECT NO.:
CONSTR. CONTR. NO. N62472-99-D-0032
NAVFAC DRAWING NO. 112G08005
SHEET S-501 OF

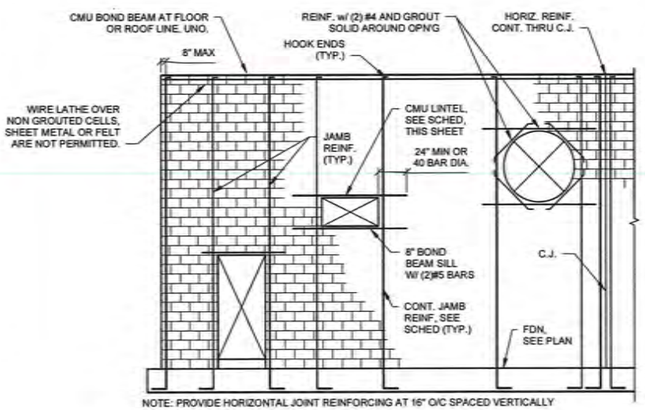

NOTE: PROVIDE HORIZONTAL JOINT REINFORCING AT 16" O/C SPACED VERTICALLY

1 S-502 TYP. CMU WALL REINFORCING
SCALE: NTS

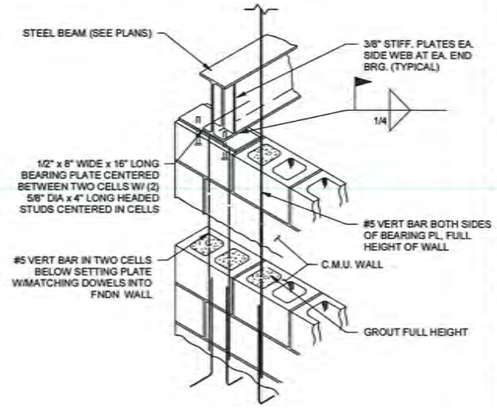

2 S-502 BEAM POCKET PERP TO WALL
SCALE: NTS

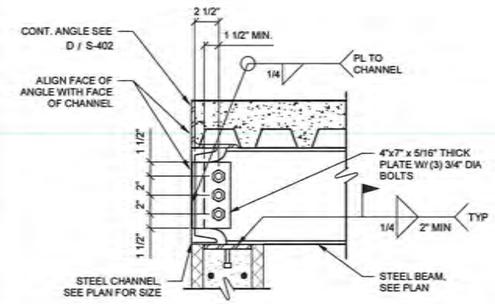

3 S-502 COPED BEAM TO CHANNEL CONNECTION
SCALE: 1 1/2" = 1'-0"

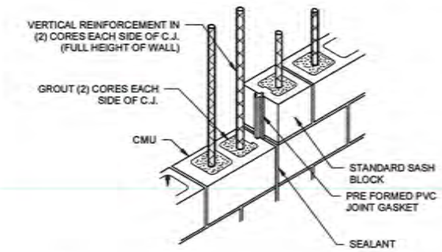

NOTE:
1. MAXIMUM MASONRY CONTROL JOINT SPACING 25'-0" U.N.O.
2. BOND BEAM HORIZONTAL REINFORCEMENT RUNS CONTINUOUS THROUGH CONTROL JOINT
3. COORDINATE CONTROL JOINT LOCATIONS WITH ARCHITECT.
4. PROVIDE DOWELS IN FOUNDATION TO MATCH VERTICAL BARS

4 S-502 MASONRY CONTROL JOINT
SCALE: NTS

MASONRY LINTEL SCHEDULE				
MARK	SIZE (WxD)	CLEAR SPAN*	REINF.	NOTES
L-1	8x8	UP TO 6'-0"	(2) #5 BOT.	
L-2	12x8	UP TO 3'-4"	(2) #5 BOT.	
L-3	12x16	3'-4" TO 6'-8"	(2) #6 T & B	
L-4	12x24	6'-8" TO 12'-8"	(2) #6 T & B	
L-5	12x32	UP TO 15'-0"	(2) #6 T & B	

LOOSE LINTEL SCHEDULE (VENEER)	
SIZE	CLEAR SPAN 'L'
7 1/2" x 7 1/2" x 3/8" BENT PLATE	L <= 6'-0"
7 1/2" x 7 1/2" x 3/8" BENT PLATE FASTENED TO CMU LINTEL W/ 3/4" DIA THREADED ROD W/ HY-270 ADHESIVE @ 24" O.C.	L > 6'-0"

LOOSE LINTEL NOTE:
8" MIN. BEARING EACH END. (ALL EXPOSED LINTELS TO BE GALVANIZED AND PAINTED, SEE SPECS.)

MASONRY LINTEL NOTES:

1. LINTEL MUST BE SHORED UNTIL MORTAR AND GROUT ATTAINS DESIGN STRENGTH.
2. SPECIAL INSPECTOR MUST VERIFY PROPER REINFORCEMENT PLACEMENT PRIOR TO GROUTING, AND VERIFY PROPER GROUT PLACEMENT.
3. MASONRY LINTELS SHALL HAVE A MINIMUM BEARING OF 8", U.N.O.
4. MASONRY LINTELS AT LOAD BEARING WALLS ARE LOCATED ON PLAN.
5. SHEAR TIES SHALL HOOK AROUND TOP AND BOTTOM REINF. ALTERNATE LEG
6. LINTEL REINFORCING SHALL EXTEND OUTSIDE THE OPENING FORTY (40) BAR DIAMETERS, EACH DIRECTION OR PROVIDE STANDARD HOOK TO TERMINATE ENDS.
7. NON-LOAD BEARING PARTITION WALL OPENINGS OR OPENINGS NOT SHOWN ON PLAN SHALL FOLLOW THE MINIMUM REINFORCING AND SPAN REQUIREMENTS PER SCHEDULE.
8. PROVIDE 8" BEARING (MIN.), UNLESS NOTED OTHERWISE

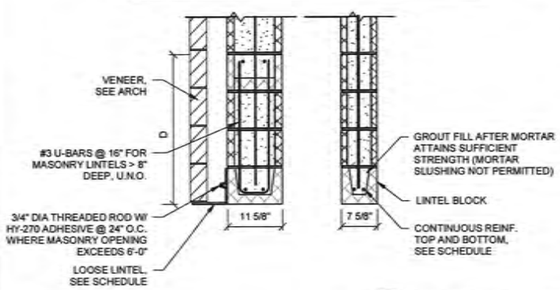

5 S-502 LINTEL CHART
SCALE: NTS

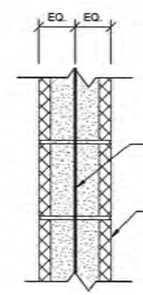

6 S-502 TYP. CMU REINF. DETAIL
SCALE: NTS

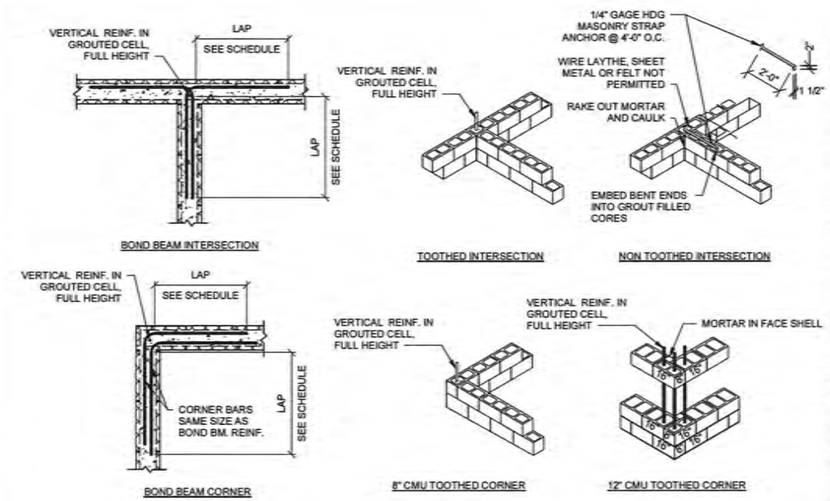

7 S-502 TYP. MASONRY INTERSECTIONS
SCALE: NTS

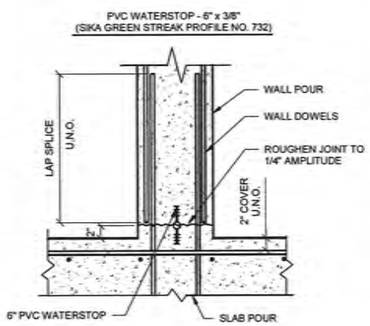

8 S-502 WALL TO SLAB CONSTRUCTION JOINT
SCALE: NTS

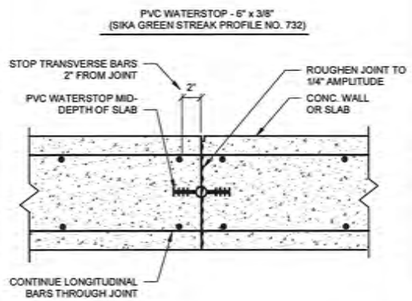

9 S-502 SLAB TO SLAB CONSTRUCTION JOINT
SCALE: NTS

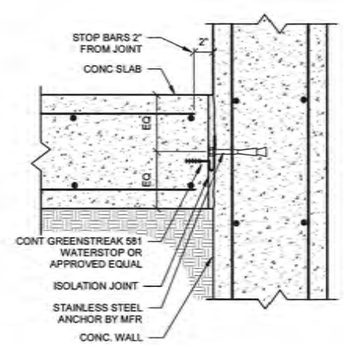

10 S-502 SLAB TO WALL CONSTRUCTION JOINT
SCALE: NTS

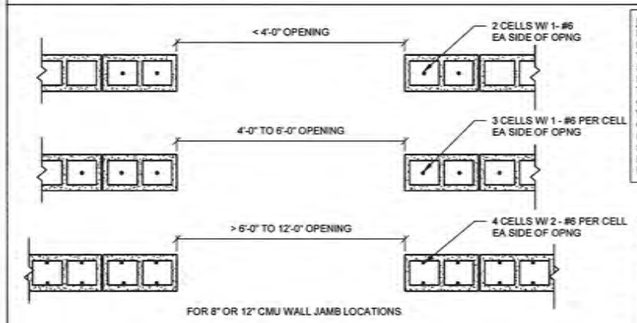

11 S-502 TYPICAL CMU JAMB DETAILS
SCALE: NTS

BIDDING INFORMATION: IF THE MORE RECENT UFC 3-301-01, WITH CHANGE 6, DATED 30 JANUARY 2026, IS REQUIRED BY THE CLIENT TO BE THE GOVERNING CODE, STRUCTURAL DESIGN WILL BE REQUIRED TO BE UPDATED TO REFERENCE ASCE 7-22. THIS CHANGE WILL MOST NOTABLY DOUBLE GROUND SNOW LOAD VALUES, INCREASE WIND PRESSURES, AND ALTER VARIOUS OTHER FACTORS OF DESIGN. IF IMPLEMENTED BY THE CLIENT, REVISED STRUCTURAL DOCUMENTS WILL BE PROVIDED AT A FUTURE DATE WITH UPDATED STRUCTURAL INFORMATION.

THIS DRAWING PRODUCED ON REVIT
DO NOT REVISE MANUALLY

"THIS DOCUMENT IS THE PROPERTY OF NAVAL FACILITIES ENGINEERING COMMAND, PREPARED BY TETRA TECH ENGINEERING CORPORATION PC, AND IS PROVIDED UPON THE CONDITION THAT IT WILL NOT BE REPRODUCED, COPIED, OR ISSUED TO A THIRD PARTY, AND WILL BE USED SOLELY FOR THE ORIGINAL INTENDED PURPOSE AND SOLELY FOR THE EXECUTION OR REVIEW OF THE ENGINEERING CONSTRUCTION OF THE PROJECT".

IT IS A VIOLATION OF THE NEW YORK STATE EDUCATION LAW, ARTICLE 145, FOR ANY PERSON, UNLESS UNDER THE DIRECTION OF A NEW YORK STATE LICENSED PROFESSIONAL ENGINEER, TO ALTER AN ITEM ON THIS DOCUMENT IN ANY WAY.

ISSUED FOR BID - FEBRUARY 2026

SYM	DESCRIPTION	DATE	APPR

NAVFAC

STATE OF NEW YORK — ADAM T. CUTLER — 095495-1 — LICENSED PROFESSIONAL ENGINEER — 04/21/2026

TETRA TECH
www.tetratech.com
5700 LAKE WRIGHT DR., SUITE 100
NORFOLK, VA 23502
PHONE: (757) 461-3700 FAX: (757) 461-4148

A/E INFO

APPROVED
FOR COMMANDER NAVFAC
ACTIVITY
As per document from Nicole Cowand, NAVFAC MIDLANT PEL/EV3
SATISFACTORY TO DATE 03/24/2026
DES JAT DRW BRF CHK ATC
PM/DM
BRANCH MANAGER
CHIEF ENG/ARCH
FIRE PROTECTION

DEPARTMENT OF THE NAVY
NAVAL FACILITIES ENGINEERING COMMAND – MID-ATLANTIC
NAVAL INDUSTRIAL RESERVE ORDNANCE PLANT
RE-108
NAVAL FACILITIES ENGINEERING SYSTEMS COMMAND
NAVAL WEAPONS INDUSTRIAL RESERVE PLANT BETHPAGE, NEW YORK
BETHPAGE NY PHASE III
GROUNDWATER TREATMENT PLANT
STRUCTURAL TYPICAL DETAILS

SCALE: AS NOTED
EPROJECT NO.
CONSTR. CONTR. NO.
N62472-99-D-0032
NAVFAC DRAWING NO
112GO8005
SHEET S-502 OF

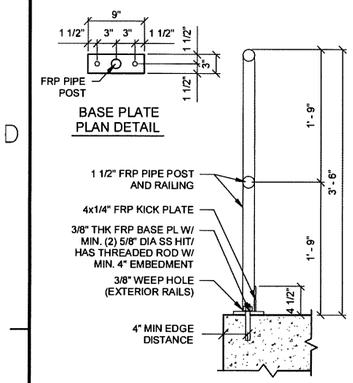

1 S-503 GUARDRAIL DETAIL- TYPE 1
SCALE: NTS

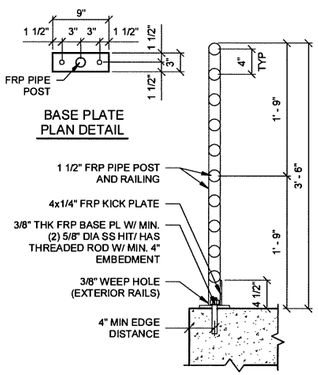

2 S-503 ADA GUARDRAIL DETAIL- TYPE 2
SCALE: NTS

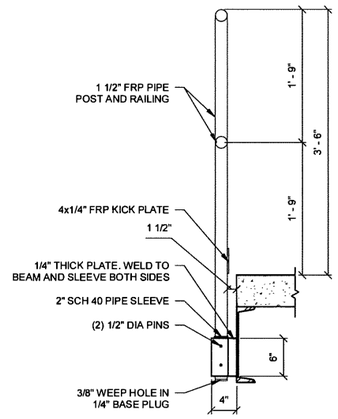

3 S-503 TYP. FRP REMOVABLE GUARDRAIL DETAIL
SCALE: NTS

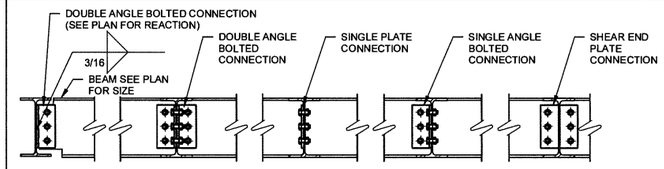

MINIMUM CONNECTION DESIGN STRENGTH SHALL BE 10 KIPS. FOR SIMPLE BEAM CONNECTIONS, THE FOLLOWING MINIMUM NUMBER OF BOLTS SHALL BE PROVIDED IN THE FOLLOWING SECTIONS REGARDLESS OF THE REQUIRED DESIGN STRENGTH.

W8, W10:	2 BOLTS
W12, W14, W16:	3 BOLTS

NOTES:
1. REFER TO GENERAL NOTES FOR BEAM REACTION DESIGN CRITERIA.
2. PROVIDE PRE-DESIGNED CONNECTIONS AS SHOWN IN AISC MANUAL WHERE APPLICABLE.
3. BOLT TYPE ASTM F3125 GR A325.
4. SUPPORTED BEAMS PRIMARILY SUPPORT DISTRIBUTED LOADS FROM SLABS OR DECKING.
5. SUPPORTING BEAMS SUPPORT SIGNIFICANT POINT LOADS FROM ONE OR MORE SUPPORTED BEAMS OR FROM COLUMNS BEING TRANSFERRED. SUPPORTING BEAMS MAY BE SUPPORTED BY COLUMNS OR BY OTHER SUPPORTING BEAMS.
6. FOR AISC SIMPLE SHEAR CONNECTIONS AT SUPPORTED BEAM ENDS, USE DOUBLE ANGLE SINGLE PLATE, OR SINGLE ANGLE U.N.O.
7. WELDED/BOLTED, WELDED/WELDED OR BOLTED/BOLTED CONNECTIONS PER AISC ARE PERMITTED.
8. ALL CONNECTIONS SHALL MEET THE ROTATIONAL DUCTILITY AND STABILITY REQUIREMENTS PROVIDED BY AISC.

4 S-503 TYP. BEAM TO BEAM SHEAR CONNECTIONS
SCALE: NTS

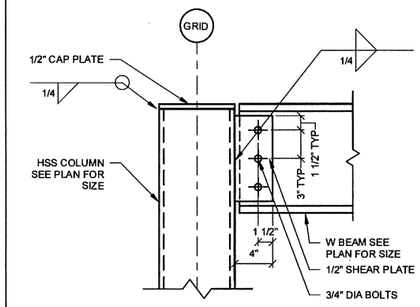

BOLT TYPE ASTM F3125 GR A325-N

W8, W10:	2 BOLTS
W12, W14, W16:	3 BOLTS
W18:	4 BOLTS

5 S-503 TYP BEAM TO COL CONNECTION
SCALE: NTS

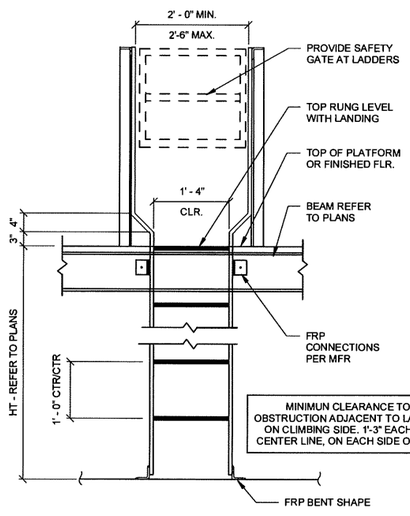

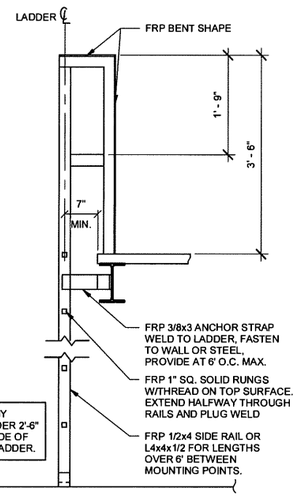

6 S-503 FRP WALK THRU LADDER DETAIL
SCALE: NTS

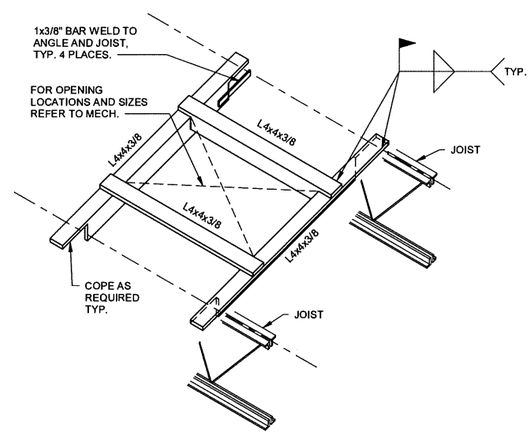

NOTES:
1. AT VENT PIPE PENETRATIONS THROUGH ROOF CONTRACTOR TO PROVIDE RISER CLAMP OR PIPE CLAMP PER MANUFACTURERS TYPICAL DETAILS

7 S-503 OPENINGS BETWEEN JOIST
SCALE: NTS

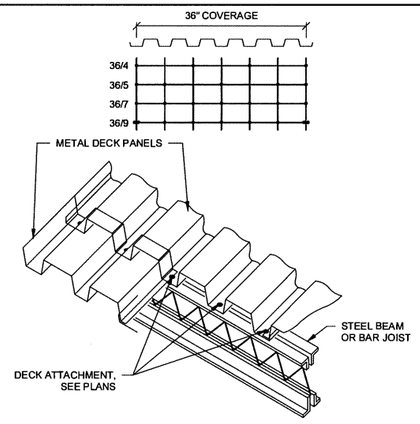

8 S-503 DECK ATTACHMENT PATTERN
SCALE: NTS

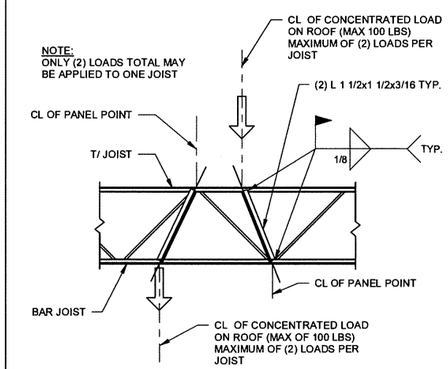

9 S-503 TYP. JOIST REINFORCEMENT
SCALE: NTS

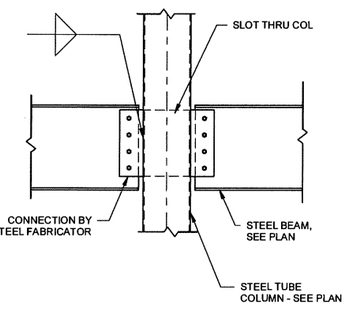

10 S-503 BEAM TO HSS COLUMN CONNECTION
SCALE: NTS

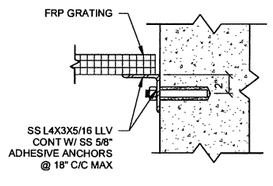

GRATING TO WALL

11 S-503 FRP GRATING DETAIL
SCALE: NTS

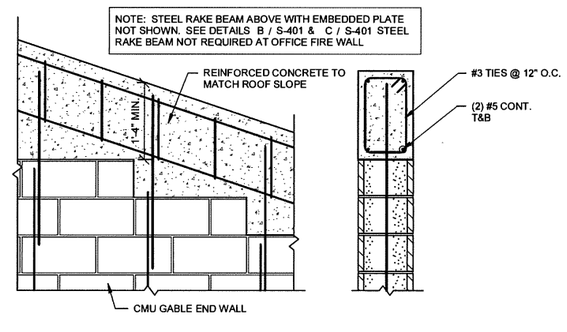

12 S-503 RAKE WALL DETAIL
SCALE: NTS

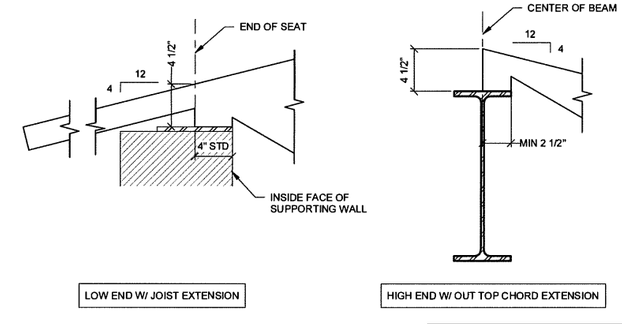

NOTES: PER SJI CODE OF STANDARD PRACTICE, REQUIRED BEARING SEAT DEPTH IS DETERMINED AT END OF SEAT

13 S-503 JOIST SEAT DEPTH AT BEARING
SCALE: NTS

BIDDING INFORMATION: IF THE MORE RECENT UFC 3-301-01, WITH CHANGE 6, DATED 30 JANUARY 2026, IS REQUIRED BY THE CLIENT TO BE THE GOVERNING CODE, STRUCTURAL DESIGN WILL BE REQUIRED TO BE UPDATED TO REFERENCE ASCE 7-22. THIS CHANGE WILL MOST NOTABLY DOUBLE GROUND SNOW LOAD VALUES, INCREASE WIND PRESSURES, AND ALTER VARIOUS OTHER FACTORS OF DESIGN. IF IMPLEMENTED BY THE CLIENT, REVISED STRUCTURAL DOCUMENTS WILL BE PROVIDED AT A FUTURE DATE WITH UPDATED STRUCTURAL INFORMATION.

ISSUED FOR BID - FEBRUARY 2026

THIS DRAWING PRODUCED ON REVIT
DO NOT REVISE MANUALLY

"THIS DOCUMENT IS THE PROPERTY OF NAVAL FACILITIES ENGINEERING COMMAND, PREPARED BY TETRA TECH ENGINEERING CORPORATION PC, AND IS PROVIDED UPON THE CONDITION THAT IT WILL NOT BE REPRODUCED, COPIED, OR ISSUED TO A THIRD PARTY, AND WILL BE USED SOLELY FOR THE ORIGINAL INTENDED PURPOSE AND SOLELY FOR THE EXECUTION OR REVIEW OF THE ENGINEERING CONSTRUCTION OF THE PROJECT".

IT IS A VIOLATION OF THE NEW YORK STATE EDUCATION LAW, ARTICLE 145, FOR ANY PERSON, UNLESS UNDER THE DIRECTION OF A NEW YORK STATE LICENSED PROFESSIONAL ENGINEER, TO ALTER AN ITEM ON THIS DOCUMENT IN ANY WAY.

SYM	DESCRIPTION	DATE	APPR

NAVFAC

STATE OF NEW YORK — ANDREW TODD JONES — 084903 — LICENSED PROFESSIONAL ENGINEER
04/21/2026 SEAL

TETRA TECH
www.tetratech.com
5700 LAKE WRIGHT DR., SUITE 102
NORFOLK, VA 23502
PHONE: (757) 461-2784 FAX: (757) 461-4148

A/E INFO

APPROVED
FOR COMMANDER NAVFAC
ACTIVITY
As per document from Nicole Cowand, NAVFAC MIDLANT PLL/EV3
SATISFACTORY TO DATE 03/24/2026
DES JAT DRW BRF CHK ATC
PM/DM
BRANCH MANAGER
CHIEF ENG/ARCH
FIRE PROTECTION

DEPARTMENT OF THE NAVY
RE-108
NAVAL FACILITIES ENGINEERING SYSTEMS COMMAND
NAVAL FACILITIES ENGINEERING COMMAND ~ MID-ATLANTIC
NAVAL INDUSTRIAL RESERVE ORDNANCE PLANT
NAVAL WEAPONS INDUSTRIAL RESERVE PLANT BETHPAGE, NEW YORK
BETHPAGE NY PHASE III
GROUNDWATER TREATMENT PLANT
STRUCTURAL TYPICAL DETAILS

SCALE: AS NOTED
EPROJECT NO.:
CONSTR. CONTR. NO. N62472-99-D-0032
NAVFAC DRAWING NO. 112GO8005
SHEET OF S-503

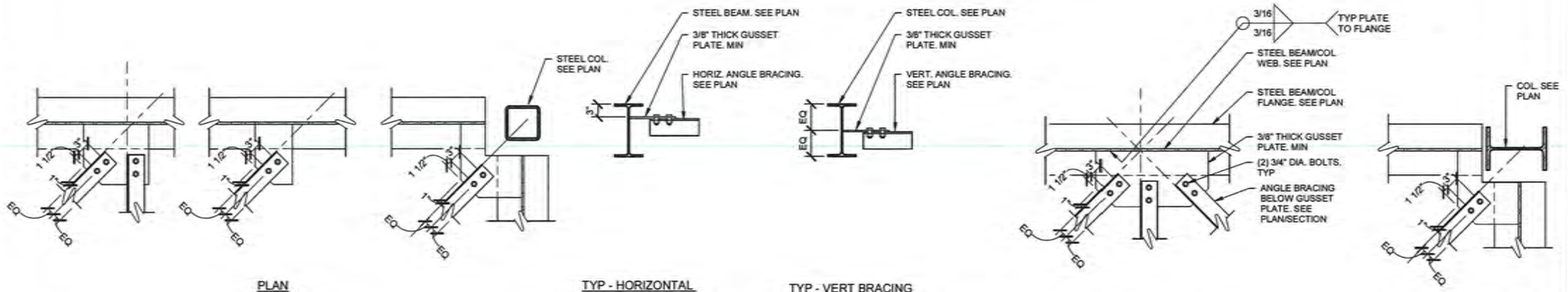

NOTE:
FINAL CONNECTION DESIGN TO BE COMPLETED BY STEEL FABRICATOR

2 / S-504 TYP BRACE CONNECTIONS
SCALE: NTS

SEE PLAN FOR INFORMATION PERTAINING TO FOUNDATION RAMPS, EXTERIOR WALLS, FOOTINGS, AND SLABS. REINFORCEMENT NOT SHOWN FOR CLARITY.

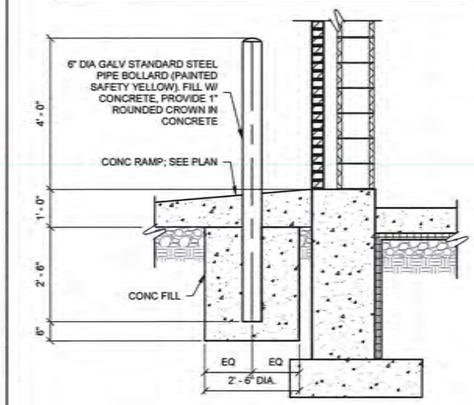

3 / S-504 TYP EXT BOLLARD @ RAMPS
SCALE: NTS

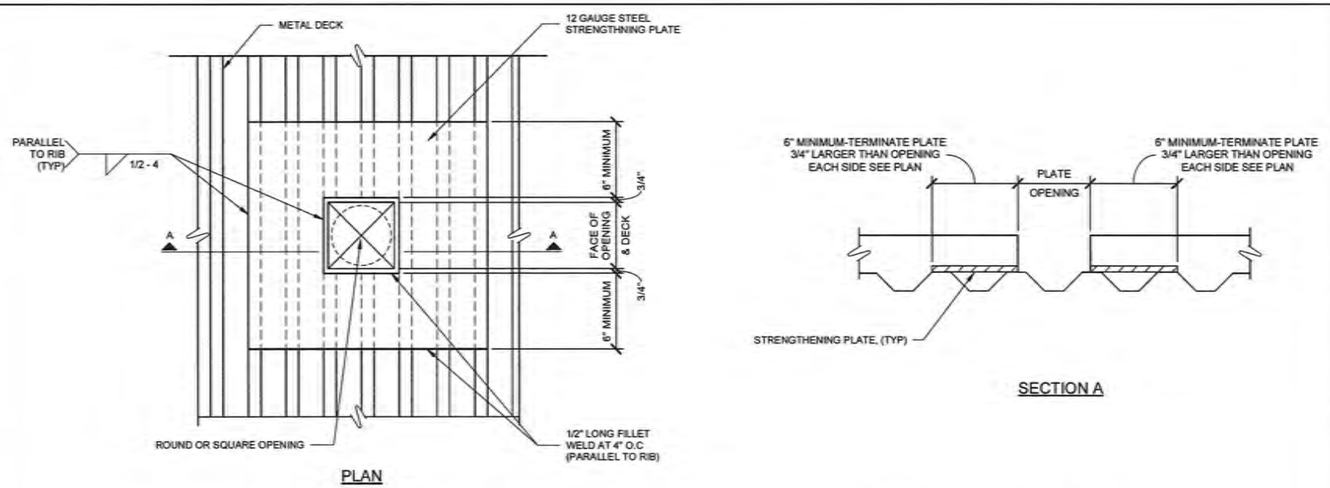

PLAN

SECTION A

4 / S-504 DECK OPENING (FOR OPENING GREATER THAN 4" AND UP TO 9" DIA OR SQUARE
SCALE: NTS

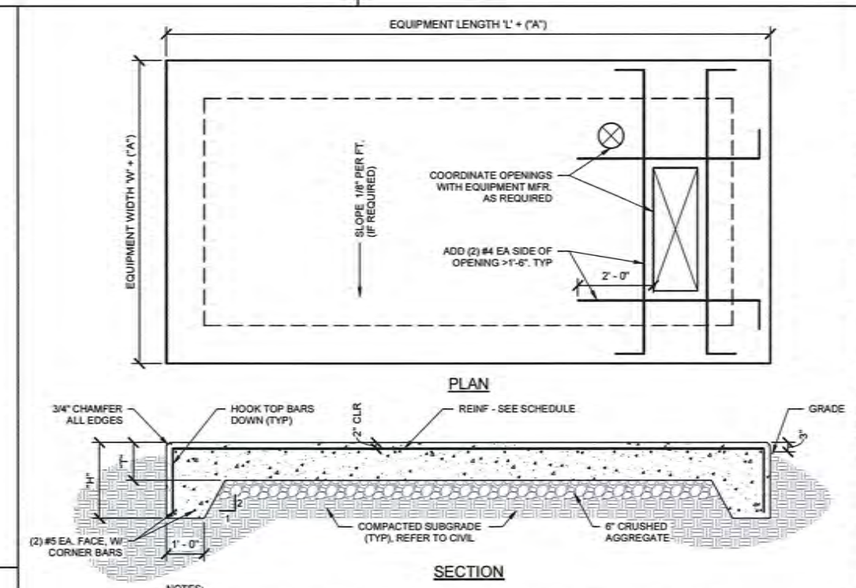

PLAN

SECTION

NOTES:
1. COORDINATE PAD WIDTH AND LENGTH WITH EQUIPMENT MFR AND CONTRACT DRAWINGS. PROVIDE SCHEDULED CLEARANCE AROUND THE PERIMETER BETWEEN THE OUTSIDE EDGE OF PAD AND OUTERMOST PORTION OF EQUIPMENT.
2. COORDINATE SIZE AND LOCATION OF REQ'D OPENINGS W/ EQUIPMENT MFR.
3. PROVIDE A BROOM FINISH TO TOP CONCRETE SURFACE.
4. ANCHOR EQUIPMENT TO CONC PER MFR RECOMMENDATIONS.
5. COORD DRAIN AND CONC SLOPE REQUIREMENTS.

EQUIPMENT PAD SCHEDULE

NAME	"A"	"W"	"L"	"T"	"H"	REINF	WEIGHT
T-1 TRANSFORMER	1'-0"	6'-0"	7'-6"	6"	4'-0"	#5 @ 12" O.C. E.W.	7,650 LBF

5 / S-504 EQUIPMENT PAD
SCALE: NTS

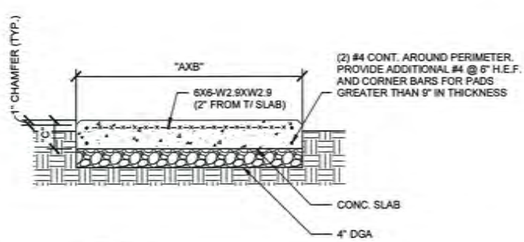

NOTE:
"A", "B", & "C" DIMS AS REQUIRED TO SUIT EQUIPMENT. ("C" = 6" TYP. U.N.O.)

6 / S-504 EXTERIOR EQUIPMENT PAD ON GRADE
SCALE: NTS

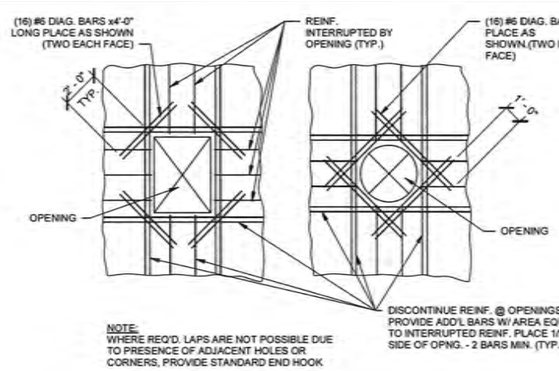

NOTE:
WHERE REQ'D. LAPS ARE NOT POSSIBLE DUE TO PRESENCE OF ADJACENT HOLES OR CORNERS, PROVIDE STANDARD END HOOK

7 / S-504 REINF. STEEL @ OPENING
SCALE: NTS

BIDDING INFORMATION: IF THE MORE RECENT UFC 3-301-01, WITH CHANGE 6, DATED 30 JANUARY 2026, IS REQUIRED BY THE CLIENT TO BE THE GOVERNING CODE, STRUCTURAL DESIGN WILL BE REQUIRED TO BE UPDATED TO REFERENCE ASCE 7-22. THIS CHANGE WILL MOST NOTABLY DOUBLE GROUND SNOW LOAD VALUES, INCREASE WIND PRESSURES, AND ALTER VARIOUS OTHER FACTORS OF DESIGN. IF IMPLEMENTED BY THE CLIENT, REVISED STRUCTURAL DOCUMENTS WILL BE PROVIDED AT A FUTURE DATE WITH UPDATED STRUCTURAL INFORMATION.

ISSUED FOR BID - FEBRUARY 2026

THIS DRAWING PRODUCED ON REVIT
DO NOT REVISE MANUALLY

"THIS DOCUMENT IS THE PROPERTY OF NAVAL FACILITIES ENGINEERING COMMAND, PREPARED BY TETRA TECH ENGINEERING CORPORATION PC, AND IS PROVIDED UPON THE CONDITION THAT IT WILL NOT BE REPRODUCED, COPIED, OR ISSUED TO A THIRD PARTY, AND WILL BE USED SOLELY FOR THE ORIGINAL INTENDED PURPOSE AND SOLELY FOR THE EXECUTION OR REVIEW OF THE ENGINEERING CONSTRUCTION OF THE PROJECT".

IT IS A VIOLATION OF THE NEW YORK STATE EDUCATION LAW, ARTICLE 145, FOR ANY PERSON, UNLESS UNDER THE DIRECTION OF A NEW YORK STATE LICENSED PROFESSIONAL ENGINEER, TO ALTER AN ITEM ON THIS DOCUMENT IN ANY WAY.

SYM	DESCRIPTION	DATE	APPR

NAVFAC

STATE OF NEW YORK — ADAM T. CARTER — 095805-1 — LICENSED PROFESSIONAL ENGINEER
04/21/2026 SEAL

TETRA TECH
www.tetratech.com
3700 LAKE WRIGHT DR., SUITE 100
NORFOLK, VA 23502
PHONE: (757) 461-3700 FAX: (757) 461-4140

A/E INFO

APPROVED
FOR COMMANDER NAVFAC

ACTIVITY
As per document from Nicole Coward, NAVFAC MIDLANT PL/EVS
SATISFACTORY TO DATE 03/24/2026

DES JAT DRN BRF CHK ATC
PM/DM
BRANCH MANAGER
CHIEF ENG/ARCH
FIRE PROTECTION

DEPARTMENT OF THE NAVY
NAVAL FACILITIES ENGINEERING SYSTEMS COMMAND
NAVAL FACILITIES ENGINEERING COMMAND ~ MID-ATLANTIC
RE-109
NAVAL INDUSTRIAL RESERVE ORDNANCE PLANT
NAVAL WEAPONS INDUSTRIAL RESERVE PLANT BETHPAGE, NEW YORK
BETHPAGE NY PHASE III
GROUNDWATER TREATMENT PLANT
STRUCTURAL TYPICAL DETAILS

SCALE: AS NOTED
PROJECT NO.:
CONSTR. CONTR. NO.: N62472-99-D-0032
NAVFAC DRAWING NO.: 112GO8005
SHEET OF
S-504

MECHANICAL LEGEND

- 20x12 SA — DUCT SIZE & SYSTEM ABBREVIATION FIRST FIGURE IS DIMENSION SHOWN ON PLAN
- DUCT SECTION, POSITIVE PRESSURE
- DUCT SECTION, NEGATIVE PRESSURE
- NEW DUCTWORK
- FLEXIBLE DUCTWORK
- DUCT TRANSITION
- RECT. TO ROUND TRANSITION
- BRANCH DUCTWORK
- TURNING VANES
- CEILING DIFFUSER - SUPPLY
- CEILING DIFFUSER - RETURN
- CEILING DIFFUSER - EXHAUST
- CEILING DIFFUSER - ROUND
- LINEAR SLOT DIFFUSER (DOUBLE SLOT)
- LOUVER AND SCREEN
- FIRE DAMPER, PROVIDE ACCESS DOOR
- VOLUME DAMPER
- BD — BACKDRAFT DAMPER
- SUPPLY/INTAKE AIRFLOW DIRECTION
- EXHAUST AIRFLOW DIRECTION
- GRILLE OR REGISTER, SIDEWALL
- PIPE CAP
- PIPE CONNECTION, BOTTOM
- PIPE CONNECTION, TOP
- PIPE ELBOW, TURNED UP
- PIPE ELBOW, TURNED DOWN
- PIPE TEE
- ANCHOR, INTERMEDIATE
- BUTTERFLY VALVE
- GATE VALVE
- BALL VALVE
- CHECK VALVE
- STRAINER VALVE
- THREE-WAY CONTROL VALVE
- TWO-WAY CONTROL VALVE
- PRESSURE GAUGE
- U — DOOR UNDERCUT
- ø — DIAMETER

- MANUAL AIR VENT
- AUTOMATIC AIR VENT
- PUMP (SCHEMATIC)
- T — THERMOSTAT
- CO2 — CARBON DIOXIDE SENSOR
- CO — CARBON MONOXIDE SENSOR
- M — MOTORIZED DAMPER
- A — PNEUMATIC DAMPER
- S — EMERGENCY SHUTDOWN SWITCH
- DP — DIFFERENTIAL PRESSURE SENSOR
- SD — DUCT SMOKE DETECTOR
- M — MASTER EMERGENCY SHUTDOWN SWITCH
- H — HUMIDISTAT
- HVAC - # — EQUIPMENT TAG
- BOD: 4' - 7" — BOTTOM OF DUCT ELEVATION TAG
- POINT OF DISCONNECTION
- POINT OF CONNECTION
- # — KEYED NOTE
- CD-A | W X H | ### — AIR TERMINAL AND AIRFLOW TAG
  - AIR QUANTITY DELIVERED BY DEVICE IN CFM
  - AIR TERMINAL NECK SIZE (IN.)
  - AIR TERMINAL MARK AS INDICATED IN SCHEDULE

OR

- SAD-# / ### CFM — AIR TERMINAL MARK AS INDICATED IN SCHEDULE
  - AIR QUANTITY DELIVERED BY DEVICE
- AREA OUT OF SCOPE
- AREA OF DEMOLITION

NOTES:

1. THIS LEGEND IS FOR REFERENCE ONLY.
2. ALL SYMBOLS WITHIN THIS LEGEND MAY NOT APPLY TO THIS PROJECT.

MECHANICAL ABBREVIATIONS

(D)	DEMOLITION
(E)	EXISTING
(R)	RELOCATED
AAV	AUTOMATIC AIR VENT
ABS	ABSOLUTE
AD	ACCESS DOOR
ADJ	ADJUSTABLE
AFF	ABOVE FINISHED FLOOR
AFG	ABOVE FINISHED GRADE
AHU	AIR HANDLING UNIT
AP	ACCESS PANEL
APD	AIR PRESSURE DROP
APPROX	APPROXIMATE
BFF	BELOW FINISHED FLOOR
BHP	BRAKE HORSEPOWER
CAP	CAPACITY
CHWR	CHILLED WATER RETURN
CHWS	CHILLED WATER SUPPLY
CONC	CONCRETE
COND	CONDENSATE
CONN	CONNECTION
CONT	CONTINUATION
CP-1	CONTROL PANEL WITH DESIGNATION
CU	CONDENSING UNIT
CW	CHILLED WATER
DB	DRY BULB
DEG	DEGREES
DEMO	DEMOLITION
DIA	DIAMETER
DN	DOWN
DWG	DRAWING
EA	EXHAUST AIR
EAG	EXHAUST AIR GRILLE
EAT	ENTERING AIR TEMPERATURE
EF	EXHAUST FAN
EMCS	EMERGENCY MANAGEMENT AND CONTROL SYSTEM
ENT	ENTERING
ERV	ENERGY RECOVERY VENTILATOR
ESP	EXTERNAL STATIC PRESSURE
ET	EXPANSION TANK
EUH	ELECTRIC UNIT HEATER
EWT	ENETERING WATER TEMPERATURE
EXH	EXHAUST
F	FAHRENHEIT
FCU	FAN COIL UNIT
FD	FIRE DAMPER
FH	FIRE HYDRANT
FLEX	FLEXIBLE
FM	FLOW METER
FPM	FEET PER MINUTE
GAL	GALLONS
GH	GRAVITY HOOD
GM	GAS METER
GPM	GALLONS PER MINUTE
GUH	GAS UNIT HEATER
HP	HORSEPOWER
HWR	HOT WATER RETURN
HWS	HOT WATER SUPPLY
ID	INSIDE DIAMETER/DIMENSION
IE	INVERT ELEVATION
IN	INCH
L	LOUVER
LAT	LEAVING AIR TEMPERATURE
LP	LOUVERED PENTHOUSE
LVL	LEVEL
LWT	LEAVING WATER TEMPERATURE
M	METER
MAX	MAXIMUM
MEZZ	MEZZANINE
MFR	MANUFACTURER
MIN	MINIMUM
MISC	MISCELLANEOUS
MOD	MOTOR OPERATED DAMPER
N/A	NOT APPLICABLE
NG	NATURAL GAS
NTS	NOT TO SCALE
OA	OUTDOOR AIR
OD	OUTSIDE DIAMETER
OED	OPEN ENDED DUCT
PD	PRESSURE DROP
PSI	POUNDS PER SQUARE INCH
R	RADIUS
RA	RETURN AIR
RAG	RETURN AIR GRILLE
REFRIG	REFRIGERANT
RH	RADIANT HEATER
RL	REFRIGERANT LIQUID LINE
RPM	REVOLUTIONS PER MINUTE
RS	REFRIGERANT SUCTION LINE
SA	SUPPLY AIR
SAG	SUPPLY AIR GRILLE
SB	SECURITY BARS
SF	SUPPLY FAN
SPEC	SPECIFICATION
STD	STANDARD
T	THERMOMETER
TA	TRANSFER AIR
TBD	TO BE DETERMINED
TD	TRANSFER DUCT
TEMP	TEMPERATURE
TSP	TOTAL STATIC PRESSURE
TSTAT	THERMOSTAT
TYP	TYPICAL
UH	UNIT HEATER
VAV	VARIABLE AIR VOLUME
VFD	VARIABLE FREQUENCY DRIVE
VIF	VERIFY IN FIELD
VRF	VARIABLE REFRIGERANT FLOW
W	WATT
WB	WET BULB
WMS	WIRE MESH SCREEN
WS	WASTE STACK

APPLICABLE CODES FOR MECHANICAL WORK

MECHANICAL CODE	IMC 2024
INTERNATIONAL FUEL GAS CODE	IFGC 2024
ENERGY CODE	ICC 2024
NATIONAL FIRE PROTECTION AGENCY (NFPA)	NFPA 820, 400

DESIGN CONDITIONS FOR LOAD CALCULATIONS (FARMINGDALE REPUBLIC, NY)

SEASON	OUTDOOR DESIGN CONDITIONS (DB / MCWB)	AIR-COOLED CONDENSER RATING	ELEV. (FT)	INDOOR CONDITIONS / ROOM TYPE				
				OFFICES	SHOPS	STORAGE	ELECTRICAL	CONTROL ROOM
SUMMER (1.)	89.8°F / 73.8°F	95 °F	81	75 °F DB	75 °F OCC / 55°F UNOCC	75 °F OCC / 55°F UNOCC	75 °F DB	75 °F DB
SUMMER (2.)	86.4°F / 72.1°F		81	75 °F DB	75 °F OCC / 55°F UNOCC	75 °F OCC / 55°F UNOCC	75 °F DB	75 °F DB
WINTER (99% DB)	16.5°F		81	68 °F DB	75 °F OCC / 55°F UNOCC	75 °F OCC / 55°F UNOCC	70 °F DB	68 °F DB

1. BASED ON 0.4% DB & MCWB TEMPERATURES.
2. BASED ON 1.0% HR (HUMIDITY RATIO) & MCDB.

ISSUED FOR BID - FEBRUARY 2026

THIS DRAWING PRODUCED ON REVIT DO NOT REVISE MANUALLY

"THIS DOCUMENT IS THE PROPERTY OF NAVAL FACILITIES ENGINEERING COMMAND, PREPARED BY TETRA TECH ENGINEERING CORPORATION PC, AND IS PROVIDED UPON THE CONDITION THAT IT WILL NOT BE REPRODUCED, COPIED, OR ISSUED TO A THIRD PARTY, AND WILL BE USED SOLELY FOR THE ORIGINAL INTENDED PURPOSE AND SOLELY FOR THE EXECUTION OR REVIEW OF THE ENGINEERING CONSTRUCTION OF THE PROJECT".

IT IS A VIOLATION OF THE NEW YORK STATE EDUCATION LAW, ARTICLE 145, FOR ANY PERSON, UNLESS UNDER THE DIRECTION OF A NEW YORK STATE LICENSED PROFESSIONAL ENGINEER, TO ALTER AN ITEM ON THIS DOCUMENT IN ANY WAY.

SYM	DESCRIPTION	DATE	APPR

NAVFAC

STATE OF NEW YORK — STEVE ESTEBAN RAMIREZ — 099098 — LICENSED PROFESSIONAL ENGINEER — 4/22/20

TETRA TECH
www.tetratech.com
4420 CORPORATION LANE, SUITE 300
VIRGINIA BEACH, VA 23462
PHONE: (757) 490-3700 FAX: (757) 497-4146
AE INFO

APPROVED
FOR COMMANDER NAVFAC
ACTIVITY
As per document from Nicole Coward, NAVFAC MIDLANT PLL/EV3
SATISFACTORY TO DATE 3/24/2026
DES PAD DRW TA CHK DB
PROM
BRANCH MANAGER
CHIEF ENGINEER
FIRE PROTECTION

DEPARTMENT OF THE NAVY
NAVAL FACILITIES ENGINEERING COMMAND
NAVAL FACILITIES ENGINEERING SYSTEMS COMMAND ~ MID-ATLANTIC
NAVAL INDUSTRIAL RESERVE ORDNANCE PLANT
NAVAL WEAPONS INDUSTRIAL RESERVE PLANT
BETHPAGE, NEW YORK
PHASE III - GROUNDWATER TREATMENT PLANT
MECHANICAL ABBREVIATIONS, LEGENDS, AND NOTES

SCALE AS NOTED
EPROJECT NO :
CONTR. CONTR. NO N62472-19-D-0202
NAVFAC DRAWING NO
SHEET OF
MH001

DRAWFORM REVISION: 23 AUGUST 2023

4/22/2020 11:45:07 AM MH001
Autodesk Docs://1230/0605-WE24 Navy Bethpage NY Phase III IMP-1123/0605_Phase III_GWTP_v2023.rvt

MECHANICAL GENERAL NOTES

GENERAL NOTES

1. THESE GENERAL NOTES APPLY TO ALL SHEETS. REFER TO INDIVIDUAL SHEETS FOR SHEET SPECIFIC NOTES.
2. CONTRACT DOCUMENT DRAWINGS ARE DIAGRAMMATIC AND ARE INTENDED TO CONVEY SCOPE AND GENERAL ARRANGEMENT ONLY. DO NOT SCALE FOR MATERIAL QUANTITIES. ALL SCALING SHOULD BE REFERENCED TO ARCHITECTURAL PLANS ONLY.
3. ALL MECHANICAL WORK SHALL BE IN STRICT COMPLIANCE WITH THE LATEST APPLICABLE EDITION OF THE INTERNATIONAL MECHANICAL AND PLUMBING CODES, APPLICABLE PROVISIONS OF THE NATIONAL FUEL GAS CODE (NFPA 54), AND APPLICABLE UFCS (MILITARY WORK).
4. COORDINATE CONSTRUCTION OF ALL MECHANICAL WORK WITH ALL OTHER DISCIPLINES AND AS SHOWN ON OTHER CONTRACT DRAWINGS.
5. CONTRACTOR SHALL VISIT SITE AND PATCHING WITH GENERAL CONTRACTOR AND OTHER DISCIPLINES. CONTRACTOR SHALL BE RESPONSIBLE FOR ALL CUTTING AND PATHING RELATED TO THEIR WORK.
6. COORDINATE ALL CUTTING AND PATCHING WITH GENERAL CONTRACTOR AND OTHER DISCIPLINES. CONTRACTOR SHALL BE RESPONSIBLE FOR ALL CUTTING AND PATCHING RELATED TO THEIR WORK.
7. ALL ATTACHMENTS TO THE BUILDING STRUCTURE SHALL BE COORDINATED WITH THE STRUCTURAL DESIGN. ALL BRACING AND MOUNTING OF PIPES AND DUCTS SHALL MEET THE MINIMUM REQUIREMENTS OF THE MOST RECENT SMACNA HVAC DUCT CONSTRUCTION STANDARDS-METAL AND FLEXIBLE. CONTRACTOR SHALL MAINTAIN ONE COPY OF THIS MANUAL ON SITE AT ALL TIMES.
8. FOR SEISMIC ZONES REFER TO STRUCTURAL DESIGN FOR SEISMIC ATTACHMENT REQUIREMENTS PER THE BUILDING CODE. ALL SEISMIC RESTRAINTS OF PIPES AND DUCTS SHALL MEET THE MINIMUM REQUIREMENTS OF THE MOST RECENT SMACNA SEISMIC RESTRAINT MANUAL. CONTRACTOR SHALL MAINTAIN ONE COPY ON SITE AT ALL TIMES.
9. PROVIDE FLASHING AND COUNTERFLASHING FOR ALL PENETRATIONS THROUGH WALLS OR ROOF TO MAKE WATERPROOF INSTALLATION.
10. MAINTAIN A MINIMUM OF 6'-8" CLEARANCE TO UNDERSIDE OF PIPES, DUCTS, CONDUITS, SUSPENDED EQUIPMENT, ETC., THROUGHOUT ACCESS ROUTES IN MECHANICAL ROOMS.
11. CONCRETE HOUSEKEEPING PADS FOR MECHANICAL EQUIPMENT SHALL HAVE A MINIMUM PAD THICKNESS OF 6 INCHES. PAD SHALL EXTEND BEYOND THE EQUIPMENT A MINIMUM OF 6 INCHES ON EACH SIDE. CONCRETE HOUSEKEEPING PADS SHALL BE PROVIDED BY THE GENERAL CONTRACTOR.
12. ALL MISCELLANEOUS STEEL REQUIRED TO ENSURE PROPER INSTALLATION AND AS SHOWN IN THE DETAILS FOR PIPING, DUCTWORK, AND EQUIPMENT (UNLESS OTHERWISE NOTED) SHALL BE FURNISHED AND INSTALLED BY THE MECHANICAL CONTRACTOR.
13. ALL TESTS SHALL BE COMPLETED BEFORE ANY MECHANICAL EQUIPMENT OR PIPING INSULATION IS APPLIED.
14. BALANCE AIR FLOW AT ALL AIR INLETS AND OUTLETS TO AIR QUANTITIES SHOWN. BALANCE ALL WATER FLOWS TO COILS AND MECHANICAL EQUIPMENT TO VALUES SHOWN. INSTALL TEST PLUGS WHERE NECESSARY. BALANCING CONTRACTOR SHALL BE INDEPENDENT OF THE INSTALLING CONTRACTORS AND CERTIFIED BY THE NATIONAL ENVIRONMENTAL BALANCING BUREAU (NEBB) OR ASSOCIATED AIR BALANCE COUNCIL (AABC).
15. ALL EXPOSED PIPE, PIPE SUPPORTS, DUCTWORK, UNFINISHED EQUIPMENT AND DUCT SUPPORTS SHALL MATCH ADJACENT FINISHES AS REQUIRED BY PAINTING SPECIFICATION AND ARCHITECTURAL DRAWINGS.
16. AT COMPLETION OF CONSTRUCTION, CONTRACTOR SHALL PROVIDE COPIES OF BOUND OPERATIONS AND MAINTENANCE MANUALS.
17. REFER TO ARCHITECTURAL PLANS FOR DOOR SCHEDULE WITH DOOR GRILLES AND/OR UNDERCUT DOORS THAT ARE USED FOR TRANSFER AIR.
18. AT THE TIME OF ROUGH INSTALLATION AND DURING STORAGE ON THE CONSTRUCTION SITE UNTIL FINAL STARTUP OF THE HEATING, COOLING AND VENTILATING EQUIPMENT, ALL DUCT AND OTHER RELATED AIR DISTRIBUTION COMPONENT OPENINGS SHALL BE COVERED WITH TAPE, PLASTIC, SHEETMETAL OR OTHER METHODS ACCEPTABLE TO THE ENFORCING AGENCY TO REDUCE THE AMOUNT OF DUST, WATER AND DEBRIS WHICH MAY ENTER THE SYSTEM.

EQUIPMENT NOTES

1. INSTALL ALL MECHANICAL EQUIPMENT AND APPURTENANCES IN ACCORDANCE WITH MANUFACTURERS RECOMMENDATIONS, CONTRACT DOCUMENTS, AND APPLICABLE CODES AND REGULATIONS.
2. WHERE TWO OR MORE ITEMS OF THE SAME TYPE OF EQUIPMENT ARE REQUIRED, THE PRODUCT OF ONE MANUFACTURER SHALL BE USED.
3. IDENTIFY ALL NEW MECHANICAL EQUIPMENT WITH NAMEPLATES PERMANENTLY ENGRAVED PER SPECIFICATIONS.
4. MOTOR STARTERS AND VARIABLE FREQUENCY DRIVES, WHERE REQUIRED, SHALL BE PROVIDED AND MOUNTED BY THE MECHANICAL INSTALLER. CONDUIT AND WIRING SHALL BE PROVIDED BY ELECTRICAL INSTALLER.
5. PROVIDE FLEXIBLE CONNECTIONS IN ALL DUCTWORK SYSTEMS (SUPPLY, RETURN, AND EXHAUST) CONNECTED TO AIR HANDLING UNITS AND FANS. FLEXIBLE CONNECTIONS SHALL BE PROVIDED AT THE POINT OF CONNECTION TO THE EQUIPMENT UNLESS OTHERWISE INDICATED.
6. PROVIDE FLEXIBLE CONNECTIONS IN ALL DUCTWORK SYSTEMS (SUPPLY, RETURN, AND EXHAUST) CONNECTED TO AIR HANDLING UNITS AND FANS. FLEXIBLE CONNECTIONS SHALL BE PROVIDED AT THE POINT OF CONNECTION TO THE EQUIPMENT UNLESS OTHERWISE INDICATED.
7. ALL ROOF MOUNTED EQUIPMENT CURBS FOR EQUIPMENT PROVIDED BY THE MECHANICAL CONTRACTOR SHALL BE FURNISHED BY THE MECHANICAL CONTRACTOR AND INSTALLED BY THE GENERAL CONTRACTOR.
8. EQUIPMENT AND APPLIANCES SHALL BE ACCESSIBLE FOR SERVICE, INSPECTION, REPAIR AND REPLACEMENT WITHOUT REMOVING PERMANENT CONSTRUCTION. SUFFICIENT CLEARANCE SHALL BE MAINTAINED TO PERMIT CLEANING, REPLACEMENT OF FILTERS, BLOWERS, MOTORS, CONTROLS AND LUBRICATION OF MOVING PARTS.

DUCT WORK NOTES

1. ALL SUPPLY AND RETURN AIR DUCTWORK SHALL BE INSULATED WITH NOT LESS THAN THE AMOUNT OF INSULATION INDICATED IN ACCORDANCE WITH THE SPECIFICATIONS, APPLICABLE MECHANICAL CODE AND BUILDING ENERGY EFFICIENCY CODE. ALL DUCTWORK MOUNTED EXTERIOR TO THE BUILDING ENVELOPE SHALL BE SANDWICHED INSULATION WITH DOUBLE WALL SHEETMETAL CONSTRUCTION.
2. ALL DUCT HANGERS AND SUPPORTS SHALL COMPLY WITH THE MECHANICAL CODE AND THE "SMACNA HVAC DUCT CONSTRUCTION STANDARDS-METAL AND FLEXIBLE".
3. ALL SUPPLY, RETURN AND NON-LAB EXHAUST AIR DUCTWORK SHALL BE GALVANIZED SHEET METAL IN ACCORDANCE WITH MECHANICAL CODE, SMACNA HVAC DUCT CONSTRUCTION STANDARDS AND ASHRAE STANDARDS. DUCT GAUGE AND CONSTRUCTION SHALL BE SELECTED AT 1.5 TIMES THE DESIGN FAN SUPPLY STATIC, OR GREATER, TO ACCOMMODATE SYSTEM PRESSURE TESTING REQUIREMENTS AND FAN DEADHEAD STATIC. INSTALL TURNING VANES OR RADIUSED ELBOWS AT EACH RECTANGULAR SUPPLY ELBOW AND WHERE SHOWN ON DRAWINGS AND SPECIFICATIONS.
4. DIMENSIONS AND SHAPE OF THE DUCT MAY BE ALTERED, AS LONG AS THE SAME AIR VELOCITY AND FLOW RATE ARE MAINTAINED, TO AVOID INTERFERENCES AND MAINTAIN ADEQUATE CLEARANCES.
5. ALL DUCTWORK DIMENSIONS SHOWN ON THE DRAWINGS ARE INTERNAL CLEAR DIMENSIONS.
6. SEAL ALL DUCT JOINTS, INCLUDING LONGITUDINAL JOINTS, WITH WATER BASED SEALANT. MAXIMUM ALLOWABLE DUCTWORK LEAKAGE SHALL NOT EXCEED 5% AND AS DEFINED ELSEWHERE IN DOCUMENTS.
7. INSTALL VOLUME DAMPERS WHERE SHOWN AND AS REQUIRED FOR PROPER BALANCING OF EACH DIFFUSER/GRILLE/REGISTER, INCLUDING DEVICES WITH OPPOSED BLADE DAMPERS. VOLUME DAMPERS SHALL BE MOUNTED IMMEDIATELY DOWNSTREAM OF BRANCH CONNECTIONS. PROVIDE EXTENDED REGULATORS, WITH CONCEALED COVER PLATES, TO OPERATE DAMPERS LOCATED ABOVE INACCESSIBLE CEILINGS.
8. OUTSIDE AIR FOR A HEATING OR COOLING SYSTEM SHALL NOT BE TAKEN FROM CLOSER THAN TEN (10) FEET FROM AN APPLIANCE VENT OUTLET, VENT OPENING OF A PLUMBING SYSTEM, OR THE DISCHARGE OUTLET OF EXHAUST FAN, UNLESS THE OUTLET IS THREE (3) FEET ABOVE THE OUTSIDE AIR INLET.
9. COORDINATE DIFFUSER, REGISTER, AND GRILLE LOCATIONS WITH ARCHITECTURAL REFLECTED CEILING PLANS, LIGHTING, AND OTHER CEILING ITEMS AND MAKE MINOR DUCT MODIFICATIONS TO SUIT.
10. INDIVIDUAL RUNS OF FLEXIBLE DUCT SHALL NOT EXCEED FIVE (5) FEET. GRILLES, REGISTERS, AND DIFFUSERS CONNECTED BY FLEXIBLE DUCT SHALL BE SUPPORTED INDEPENDENTLY OF THE FLEXIBLE DUCT.
11. ALL DUCTWORK SHALL BE COORDINATED WITH ALL TRADES INVOLVED. OFFSETS IN DUCTS, INCLUDING DIVIDED DUCTS AND TRANSITIONS AROUND OBSTRUCTIONS, SHALL BE PROVIDED AT NO ADDITIONAL COST.
12. PROVIDE ACCESS DOORS IN DUCTWORK TO PROVIDE ACCESS FOR ALL FANS, SMOKE DETECTORS, FIRE DAMPERS, SMOKE DAMPERS, VOLUME DAMPERS, HUMIDIFIERS, COILS, AND OTHER ITEMS LOCATED IN THE DUCTWORK WHICH REQUIRE ADJUSTMENT AND MAINTENANCE.
13. DUCT MOUNTED PHOTOELECTRIC SMOKE DETECTORS SHALL BE INSTALLED FOR EACH HEATING OR COOLING SYSTEM SUPPLYING AIR IN EXCESS OF 2000 CFM AND IN SYSTEMS SERVING MORE THAN ONE OCCUPANCY TYPE. DETECTOR SHALL SHUT DOWN THE AIR-MOVING EQUIPMENT WHEN SMOKE IS DETECTED. PROVIDE REMOTE TEST AND RESET STATION FOR MOUNTING AT THE CEILING OR WALL IN THE VICINITY OF THE SMOKE DETECTOR.
14. EXTERIOR LOUVERS ARE INDICATED FOR INFORMATION ONLY. DETAILED DESCRIPTIONS ARE PROVIDED IN THE ARCHITECTURAL DOCUMENTS AND SHALL BE COORDINATED WITH GENERAL CONTRACTOR.
15. ALL PENETRATIONS THROUGH FIRE AND SMOKE RATED WALLS DUE TO DUCTWORK, PIPING, CONDUIT, ETC., SHALL BE FIRE AND SMOKE STOPPED WITH A UL APPROVED SEALANT SYSTEM.
16. MECHANICAL DUCT PENETRATIONS OF A NON-FIRE RESISTANCE RATED FLOOR ASSEMBLY SHALL BE PROTECTED WITH A SHAFT ASSEMBLY IN ACCORDANCE WITH THE BUILDING CODE. OR, WHEN THE DUCT CONNECTS NOT MORE THAN TWO STORIES, THE ANNULAR SPACE AROUND THE PENETRATING DUCT MUST BE MATERIAL THAT RESISTS THE FREE PASSAGE OF FLAME AND PRODUCTS OF CONSTRUCTION.
17. USE 45 DEG. TAPS FOR DUCT BRANCHES AND PROVIDE VOLUME DAMPER AT EACH BRANCH.
18. STRAIGHT DUCT LENGTH PRIOR TO VAV BOX CONNECTION SHALL BE MINIMUM OF THREE MULTIPLIED BY THE INLET DUCT DIAMETER (3 X D), WHERE VAV BOXES ARE USED.

PIPING NOTES

1. CONDENSATE AND PRESSURE RELIEF PIPING SHALL BE TYPE L OR M TUBING WITH WROUGHT COPPER FITTINGS. A PRIMARY DRAIN PAN SHALL BE PROVIDED WITH COOLING COIL AND EXTEND BEYOND THE LEAVING SIDE OF THE COIL AND UNDERNEATH THE COOLING COIL CONNECTIONS. PROVIDE SECONDARY DRAIN PIPE FOR EQUIPMENT ABOVE CEILINGS AND ROUTE TO A READILY VISIBLE LOCATION.
2. SUPPORT ALL PIPING SO THAT IT IS FIRMLY HELD IN PLACE BY APPROVED HANGERS AND SUPPORTS.
3. HYDRONIC PIPING SHALL HAVE MANUAL VENTS AT ALL HIGH POINTS. A MINIMUM OF ONE AUTOMATIC AIR VENT SHALL BE PROVIDED AT THE HIGHEST POINT IN THE SYSTEM AND SHALL HAVE EXTENDED TUBING ROUTED TO APPROVED DRAINAGE. PROVIDE DRAIN VALVES WITH REMOVABLE PLUG AT THE BOTTOM OR PIPE RISERS AND LOW POINTS TO ALLOW DRAINING SYSTEM.

ANCHORAGE NOTES

1. ALL MECHANICAL EQUIPMENT SHALL BE ANCHORED OR BRACED TO MEET THE HORIZONTAL AND VERTICAL FORCES PRESCRIBED IN CHAPTER 13 OF ASCE 7-16, IBC 2108 SECTION 1613, AND AS MODIFIED BY CHAPTER 2 OF UFC 3-301-01.
2. THE ATTACHMENT OF THE FOLLOWING ITEMS SHALL RESIST THE ASSIGNED FORCES BUT NEED NOT BE DETAILED ON THE PLANS. THE INSPECTOR SHALL VERIFY THAT THESE EQUIPMENT AND DISTRIBUTION SYSTEMS HAVE BEEN ANCHORED.
   - TEMPORARY OR MOVABLE EQUIPMENT WITH FLEXIBLE CONNECTION TO POWER OR UTILITIES.
   - EQUIPMENT WEIGHING 20 LB OR LESS OR IN CASE OF DISTRIBUTED SYSTEM 5 LB/FT OR LESS.
3. INSTALLATION OF THE COMPONENTS NOT SPECIFICALLY DETAILED ON THE PLANS SHALL BE SUBJECT TO THE APPROVAL OF THE OWNER'S REPRESENTATIVE AND/OR STRUCTURAL ENGINEER.
4. PROVIDE CALCULATIONS AND DETAILS FOR THE SUPPORTS, ATTACHMENTS, AND BRACING OF ALL PIPES, DUCTS, AND CONDUITS.
5. A LICENSED PROFESSIONAL ENGINEER SHALL VERIFY THE ADEQUACY OF STRUCTURE FOR SUPPORT AND ANCHORAGE OF THE EQUIPMENT.

CONTROL NOTES

1. LOCATE ALL TEMPERATURE, PRESSURE, AND FLOW MEASURING DEVICES IN ACCESSIBLE LOCATIONS WITH STRAIGHT SECTION OF PIPE OR DUCT UPSTREAM AND DOWNSTREAM AS RECOMMENDED BY THE MANUFACTURER FOR RATED ACCURACY.
2. UNLESS OTHERWISE SHOWN, LOCATE ALL ROOM SENSORS AND THERMOSTATS SUCH THAT OPERABLE PARTS ARE NO HIGHER THAN 48" ABOVE FINISHED FLOOR.
3. COORDINATE ALL CONTROLS AND SEQUENCES OF OPERATION WITH THE BUILDING AUTOMATION SYSTEM (BAS). PROVIDE ALL DEVICES, CONTROLLERS, SENSORS, CONDUIT, WIRING AND LABOR TO PROVIDE A COMPLETE AND OPERATIONAL SYSTEM TO MEET THE OWNER'S PROJECT REQUIREMENTS AND THE DESIGN INDICATED ON THESE DRAWINGS AND SPECIFICATIONS.
4. ALL CONTROL CONDUIT AND WIRING SHALL COMPLY WITH THE ELECTRICAL CODE AND THE SPECIFICATIONS.
5. THE CONTROLS CONTRACTOR IS RESPONSIBLE FOR POWER CIRCUITS AND WIRING TO ALL CONTROL PANELS.

ISSUED FOR BID - FEBRUARY 2026

THIS DRAWING PRODUCED ON REVIT
DO NOT REVISE MANUALLY

"THIS DOCUMENT IS THE PROPERTY OF NAVAL FACILITIES ENGINEERING COMMAND, PREPARED BY TETRA TECH ENGINEERING CORPORATION PC, AND IS PROVIDED UPON THE CONDITION THAT IT WILL NOT BE REPRODUCED, COPIED, OR ISSUED TO A THIRD PARTY, AND WILL BE USED SOLELY FOR THE ORIGINAL INTENDED PURPOSE AND SOLELY FOR THE EXECUTION OR REVIEW OF THE ENGINEERING CONSTRUCTION OF THE PROJECT".

IT IS A VIOLATION OF THE NEW YORK STATE EDUCATION LAW, ARTICLE 145, FOR ANY PERSON, UNLESS UNDER THE DIRECTION OF A NEW YORK STATE LICENSED PROFESSIONAL ENGINEER, TO ALTER AN ITEM ON THIS DOCUMENT IN ANY WAY.

SYM	DESCRIPTION	DATE	APPR

NAVFAC

STATE OF NEW YORK — STEVEN RAMIREZ — 099998 — LICENSED PROFESSIONAL ENGINEER — 4/22/20

TETRA TECH

APPROVED:
FOR COMMANDER NAVFAC

ACTIVITY:
As per document from Nicole Coward, NAVFAC MIDLANT PLI/EV3

SATISFACTORY TO: DATE 3/24/2026

DES PAD DFTR TA CHK DB

PROJ#:
BRANCH MANAGER:
CHIEF ENGINEER:
FIRE PROTECTION

DEPARTMENT OF THE NAVY
NAVAL FACILITIES ENGINEERING COMMAND
NAVAL FACILITIES ENGINEERING SYSTEMS COMMAND – MID-ATLANTIC
NAVAL INDUSTRIAL RESERVE ORDNANCE PLANT
NAVAL WEAPONS INDUSTRIAL RESERVE PLANT
BETHPAGE, NEW YORK
PHASE III - GROUNDWATER TREATMENT PLANT
MECHANICAL GENERAL NOTES

SCALE: AS NOTED
EPROJECT NO:
CONSTR. CONTR. NO: N62473-99-D-2002
NAVFAC DRAWING NO:
SHEET OF
MH002

4/22/2026 11:45:08 AM MH002
Autodesk Docs://1120N005-WI24 Navy Bethpage NY-Phase III A/N-1120N005_Phase III_GWTP_v2023.rvt

NOTIFICATION: THIS PAGE CONTAINS SENSITIVE BUT UNCLASSIFIED INFORMATION WHICH IS PROTECTED BY THE FREEDOM OF INFORMATION ACT

EXEMPTION 3. (5 USC 552(b)(3))

Information exempted by other statutes

10 USC Section 130(e) Treatment of Certain Critical Infrastructure Security Information

Pages - 5

TO REQUEST A COPY OF THE DOCUMENT PLEASE CONTACT

Department of the Navy
Freedom of Information Act Office

http://www.secnav.navy.mil/foia/Pages/default.aspx

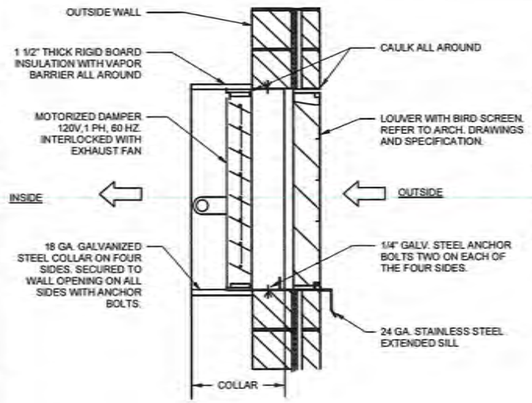

NOTES:
1. FOR LOCATION AND SIZE OF THE WALL OPENINGS, SEE PLANS.
2. LOUVER/DAMPER ASSEMBLIES TO BE ASSEMBLED AT LOUVER MANUFACTURER FACTORY.
3. EXTENDED SILL TO BE PROVIDED BY LOUVER MANUFACTURER.
4. MOTOR ACTUATORS TO BE SIZED AND INSTALLED BY LOUVER MANUFACTURER.
5. INSTALLATION OF LOUVER TO BE IN ACCORDANCE WITH LOUVER MANUFACTURER'S RECOMMENDATIONS.

1 MH501 LOUVER/DAMPER DETAIL
SCALE: N.T.S.

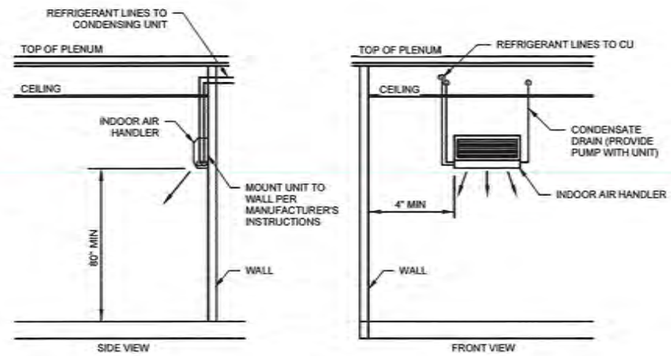

NOTE: WALL MOUNTED THERMOSTAT SHALL BE PROVIDED.

2 MH501 DUCTLESS AIR HANDLING UNIT DETAIL
SCALE: N.T.S.

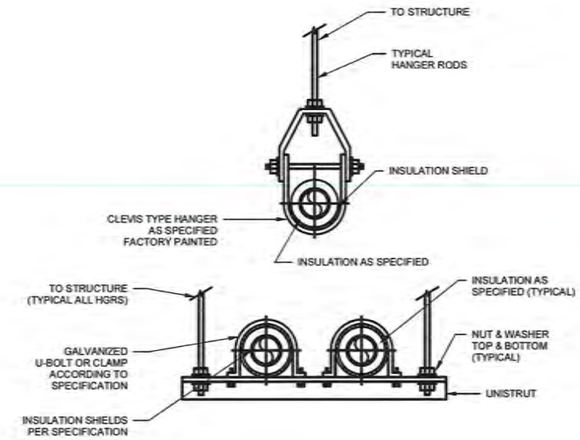

3 MH501 PIPE HANGER - CLEVIS/TRAPEZE
SCALE: N.T.S.

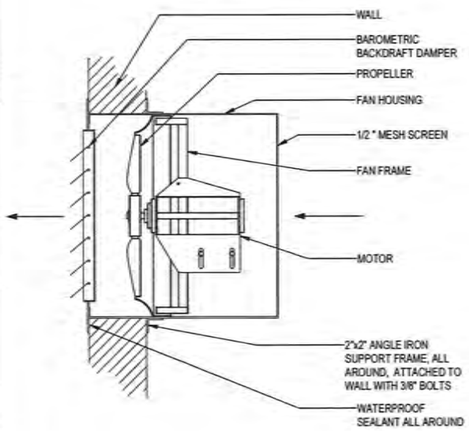

NOTES:
1. REFER TO STRUCTURAL DESIGN FOR ATTACHMENT REQUIREMENTS AND ADDITIONAL SUPPORT OPTIONS.
2. REFER TO PLANS FOR SIZES AND LOCATIONS.

4 MH501 SIDEWALL PROPELLER EXHAUST FAN
SCALE: NONE

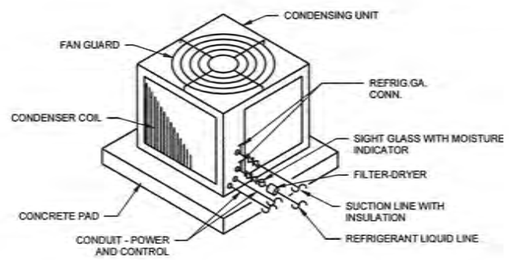

5 MH501 HEAT PUMP UNIT DETAIL
SCALE: N.T.S.

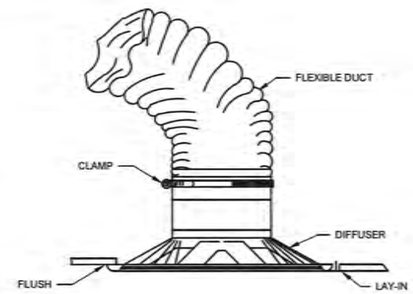

6 MH501 DIFFUSER WITH FLEXIBLE CONNECTION DETAIL
SCALE: N.T.S.

NOTE:
AT EXTERIOR WALLS, FLASH AND SEAL PENETRATION WEATHER TIGHT

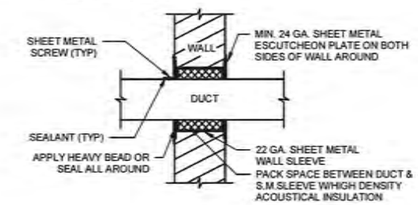

7 MH501 DUCT PENETRATION THROUGH WALL
SCALE: N.T.S.

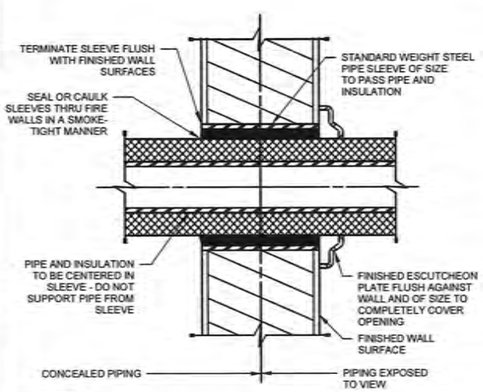

NOTE:
PROVIDE UL RATED ASSEMBLIES FOR ALL WALLS WITH FIRE RATINGS.

8 MH501 PIPE SLEEVE THRU INTERIOR WALL
SCALE: N.T.S.

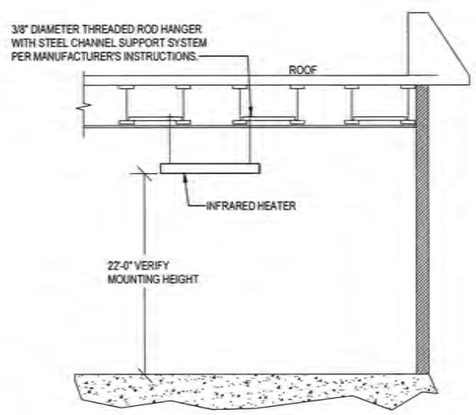

NOTES:
1. REFER TO PLANS FOR SIZES AND CONTINUATION.

9 MH501 ELECTRIC INFRARED HEATER DETAIL
SCALE: N.T.S.

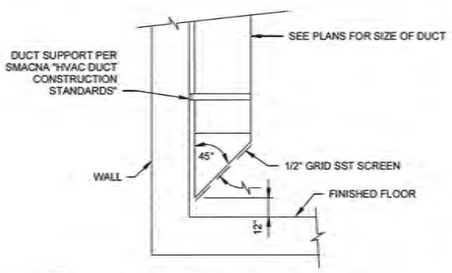

11 MH501 FLOOR EXHAUST DUCT DETAIL
SCALE: N.T.S.

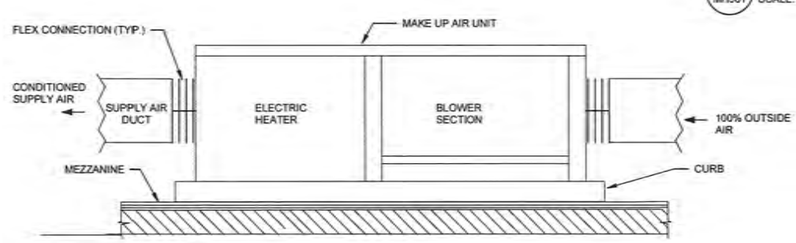

10 MH501 MAKE UP AIR UNIT DETAIL
SCALE: N.T.S.

ISSUED FOR BID - FEBRUARY 2026

THIS DRAWING PRODUCED ON REVIT DO NOT REVISE MANUALLY

"THIS DOCUMENT IS THE PROPERTY OF NAVAL FACILITIES ENGINEERING COMMAND, PREPARED BY TETRA TECH ENGINEERING CORPORATION PC, AND IS PROVIDED UPON THE CONDITION THAT IT WILL NOT BE REPRODUCED, COPIED, OR ISSUED TO A THIRD PARTY, AND WILL BE USED SOLELY FOR THE ORIGINAL INTENDED PURPOSE AND SOLELY FOR THE EXECUTION OR REVIEW OF THE ENGINEERING CONSTRUCTION OF THE PROJECT".

IT IS A VIOLATION OF THE NEW YORK STATE EDUCATION LAW, ARTICLE 145, FOR ANY PERSON, UNLESS UNDER THE DIRECTION OF A NEW YORK STATE LICENSED PROFESSIONAL ENGINEER, TO ALTER AN ITEM ON THIS DOCUMENT IN ANY WAY.

SYM	DESCRIPTION	DATE	APPR

NAVFAC

STATE OF NEW YORK · MICHAEL ESTEBAN RAMIREZ · 099095 · LICENSED PROFESSIONAL ENGINEER
4/22/20

TETRA TECH
www.tetratech.com
4423 CORPORATION LANE, SUITE 320
VIRGINIA BEACH, VA 23462
PHONE: (757) 490-3350 FAX: (757) 490-4180
NY PE

APPROVED
FOR COMMANDER NAVFAC
ACTIVITY
As per document from Nicole Coward, NAVFAC MIDLANT PLUEV3
SATISFACTORY TO DATE 3/24/2025
DES. PAD DRW. TA CHK. DB
PM/CM
BRANCH MANAGER
CHIEF ENGIN/CM
FIRE PROTECTION

DEPARTMENT OF THE NAVY
NAVAL FACILITIES ENGINEERING SYSTEMS COMMAND – MID-ATLANTIC
NAVAL INDUSTRIAL RESERVE ORDNANCE PLANT
NAVAL FACILITIES ENGINEERING COMMAND
NAVAL WEAPONS INDUSTRIAL RESERVE PLANT
BETHPAGE, NEW YORK
PHASE III - GROUNDWATER TREATMENT PLANT
MECHANICAL DETAILS

SCALE: AS NOTED
EFPROJECT NO.:
CONSTR. CONTR. NO.: N62472-99-D-0002
NAVFAC DRAWING NO.
SHEET OF
MH501

DRAWING FORM REVISION: 25 AUGUST 2020

4/22/2026 11:45:13 AM MH501
Autodesk Docs://1120/98005-W124 Navy: Bethpage NY-Phase III IRP-1120/98005_Phase III_GWTP_v2023.rvt

AIR CONDITIONING UNIT SCHEDULE

MARK	AREA SERVED	CFM	ESP (IN WC)	COOLING COIL						COND. ENT. AIR TEMP. °F	ELECTRIC HEATING COIL			ELECTRICAL			NOTES
				ENTERING AIR TEMP. °F		LEAVING AIR TEMP. °F		SENS MBH	TOTAL MBH		AIR TEMP. °F		KW	VOLTS / PH / HZ	MCA	MOP	
				DB	WB	DB	WB				ENT	LVG					
AC-01	101 OPEN OFFICE	1150	0.5	80.0	67.0	55.0	54.0	38.3	48.0	95	68	98	11.0	208/1/60	6.8	15	ASSOCIATED EQUIPMENT: HP-04

MINI-SPLIT SYSTEM FAN COIL SCHEDULE

TAG	AREA SERVED	AIRFLOW (CFM)	COOLING CAPACITY (MBH)	HEATING CAPACITY @ 47° F (MBH)	MCA	MOP (A)	VOLTS / PH / HZ	ASSOCIATED EQUIPMENT	NOTES
SFC-01	CONTROL 107	800	38.9	32.5	23	30	208-1-60	HP-01	ALL
SFC-02	ELECTRICAL 106	800	38.9	32.5	23	30	208-1-60	HP-02	ALL
SFC-03	ELECTRICAL 106	800	38.9	32.5	23	30	208-1-60	HP-03	ALL

NOTES
1. PROVIDE UNIT WITH FACTORY WIRED WALL MOUNTED THERMOSTAT. PROGRAMMABLE THERMOSTAT WITH BACNET INTERFACE.
2. PROVIDE WITH CONDENSATE PUMP. PUMP IS POWERED FROM UNIT.
3. POWER TO BE PROVIDED TO THE INDOOR UNIT FROM THE OUTDOOR UNIT VIA AN INTERCONNECT POWER CABLE

SPLIT SYSTM HEAT PUMP UNIT SCHEDULE

TAG	SERVICE	COOLING CAPACITY (MBH)	HEATING CAPACITY (MBH)	NO. OF FANS	NO. OF CIRCUITS	AMBIENT TEMP.	EER	MOP	MCA	VOLTS	PH	HZ	ASSOCIATED EQUIPMENT	NOTES
HP-01	CONTROL ROOM 107	39.8	32.5	1	1	95 °F	11.3	30	23 A	208	1	60	SFC-01	ALL
HP-02	ELECTRICAL ROOM 106	39.8	32.5	1	1	95 °F	11.3	30	23 A	208	1	60	SFC-02	ALL
HP-03	ELECTRICAL ROOM 106	39.8	32.5	1	1	95 °F	11.3	30	23 A	208	1	60	SFC-03	ALL
HP-04	OFFICE AREA	39.8	32.5	1	1	95 °F	11.3	30	23 A	208	1	60	AC-01	ALL

NOTES
1. PROVIDE FACTORY APPLIED CONDENSER COIL COATING MEETING REQUIREMENTS OF ASTM B117-90 3000 HOUR SALT SPRAY RESISTANCE TEST WITH NO DEGRADATION.
2. POWER TO BE PROVIDED TO THE INDOOR UNIT FROM THE OUTDOOR UNIT VIA AN INTERCONNECT POWER CABLE.

LOUVER SCHEDULE

TAG	TYPE	AIRFLOW (CFM)	SIZE W X H (IN)	FREE AREA (SQ FT)	VELOCITY (FPM)	AIR PRESSURE DROP (IN WG)	MOUNTING	FRAME	FINISH	MATERIAL	NOTES
L-1	EXHAUST - EF-1	300	18 X 12	0.24	1250	0.05	WALL	ALUMINUM	MILL	ALUMINUM	1,3,4,5
L-2	EXHAUST - EF-04	300	18 X 12	0.24	1250	0.05	WALL	ALUMINUM	MILL	ALUMINUM	1,3,4,5
L-3	INTAKE - DRYER RM 108	300	18 X 12	0.24	1250	0.05	WALL	ALUMINUM	MILL	ALUMINUM	1,2,4,5
L-4	INTAKE	2400	30 X 24	1.92	1250	0.5	WALL	ALUMINUM	MILL	ALUMINUM	1,2,4,5
L-6	PLANT GENERAL INTAKE	1500	24 X 18	1.20	1250	0.5	WALL	ALUMINUM	MILL	ALUMINUM	1,2,4,5
L-7	PLANT GENERAL INTAKE	1500	24 X 18	1.20	1250	0.5	WALL	ALUMINUM	MILL	ALUMINUM	1,2,4,5
L-8	PLANT GENERAL INTAKE	1500	24 X 18	1.20	1250	0.5	WALL	ALUMINUM	MILL	ALUMINUM	1,2,4,5
L-9	INTAKE - AC-01	125	12 X 12	0.5	500	0.05	WALL	ALUMINUM	MILL	ALUMINUM	1,2,4,5

NOTES
1. PROVIDE DRAIN ABLE FIXED BLADE LOUVER.
2. PROVIDE ALUMINUM FLAT EXPANDED BIRD SCREEN.
3. PROVIDE ALUMINUM INSECT SCREEN.
4. PROVIDE MOTORIZED BACKDRAFT DAMPER.
5. COORDINATE WITH STRUCTURAL AND ARCHITECTURAL DRAWINGS FOR EXACT PLACEMENT OF LOUVERS.

FAN SCHEDULE

TAG	AIRFLOW (CFM)	ESP (IN. WG.)	FAN RPM	HP	VOLTS / PH / HZ	TYPE	DRIVE	MOUNTING HEIGHT (FT)	SERVICE	NOTES
CF-1	N/A	N/A	145	1.0	480 / 3 / 60	8' DIA HVLS	DIRECT	25	PLANT (CIRC. AIR)	
CF-2	N/A	N/A	145	1.0	480 / 3 / 60	8' DIA HVLS	DIRECT	25	PLANT (CIRC. AIR)	
CF-3	N/A	N/A	191	1.0	480 / 3 / 60	8' DIA HVLS	DIRECT	25	PLANT (CIRC. AIR)	
CF-4	N/A	N/A	191	1.0	480 / 3 / 60	8' DIA HVLS	DIRECT	25	PLANT (CIRC. AIR)	
EF-01	300	0.50	1550	1/6	120 / 1 / 60	CENTRIFUGAL INLINE		8	PLANT -TOILET / SHOWER	2,4
EF-02	325	0.33	1550	1/4	480 / 3 / 60	PROPELLER WALL FAN	DIRECT	8	PEROX TANK RM 112	1,3,4
EF-03	475	0.33	1650	1/4	480 / 3 / 60	PROPELLER WALL FAN	DIRECT	8	MECH RM 111	2,4
EF-04	175	0.30	1300	1/6	120 / 1 / 60	CENTRIFUGAL INLINE	DIRECT	8	OFFICE BLDG. - BREAK / RR	2,4
EF-05	350	0.33	1550	1/4	480 / 3 / 60	PROPELLER WALL FAN	DIRECT	8	CAUSTIC ROOM 113	1,3,4
EF-06	250	0.33	1350	1/4	480 / 3 / 60	PROPELLER WALL FAN	DIRECT	8	SODIUM HYPOCHLORITE ROOM 114	1,3,4
EF-07	625	0.33	1350	1/4	480 / 3 / 60	PROPELLER WALL FAN	DIRECT	8	OZONE GENERATOR ROOM 110	1,3,4
EF-08	1400	0.33	1160	1/4	480 / 3 / 60	PROPELLER WALL FAN	DIRECT	8	AOP REACTORS / OZONE SYSTEM RM 109	1,3,4
EF-9	1500	0.33	1350	1/4	480 / 3 / 60	PROPELLER WALL FAN	DIRECT	23	PLANT (VENTILATION)	5
EF-10	1500	0.33	1350	1/4	480 / 3 / 60	PROPELLER WALL FAN	DIRECT	23	PLANT (VENTILATION)	5

NOTES
1. FAN TO BE PROVIDED WITH EXPLOSION PROOF MOTOR AND SPARK PROOF CONSTRUCTION (AMCA TYPE B).
2. INTERLOCK FAN WITH LIGHT SWITCH.
3. PROVIDE WITH MOTORIZED BACKDRAFT DAMPER.
4. FAN TO OPERATE 24/7.
5. FAN TO OPERATE BY THERMOSTAT.

MAKEUP AIR UNIT SCHEDULE

MARK	LOCATION	SUPPLY FAN			HEATING COIL				FILTER	VOLTS / PH / HZ	WEIGHT (LBS)	NOTES
		AIRFLOW (CFM)	ESP (IN WC)	MOTOR HP	TYPE	TOTAL CAPACITY (KW)	EAT (°F)	LAT (°F)				
MAU-1	MECH PLATFORM 07	2400	0.75	1.5	ELECTRIC	40.0	16.5	50.0	MERV 13	480/3/60		ALL

NOTES
1. PROVIDE 2 SPARE SETS OF MERV 13 FILTERS.
2. PROVIDE INSULATED LOW-LEAKAGE MOTORIZED DAMPER ON INTAKE.
3. PROVIDE UNIT WITH MICROPROCESSOR CONTROLLER WITH BACNET INTERFACE. SEE THE CONTROLS DRAWINGS FOR ADDITIONAL INFORMATION.
4. PROVIDE HEATING AIR INLET SENSOR, DIRTY FILTER SWITCH, INLET DAMPER END SWITCH, AIRFLOW MONITORING CONTACT, AND FLAME SENSING - FLAME ROD
5. PROVIDE UNIT WITH OUTSIDE AIR AND SUPPLY AIR TEMPERATURE SENSORS.
6. PROVIDE DOUBLE WALL UNIT CONSTRUCTION. WALL INSULATION - 1 IN. FIBERGLASS.
7. PROVIDE FREEZE PROTECTION (SUPPLY AIR LOW LIMIT)

ELECTRIC CABINET HEATER SCHEDULE

MARK	LOCATION	CAPACITY (kW)	AIR TEMP (F)		VOLTS / PH / HZ	NOTES
			EAT (F)	LAT (F)		
ECH-01	PLANT TOILET 103	1.8	50.0	90.0	120 / 1 / 60	ALL
ECH-02	PLANT LOCKER 102	1.8	50.0	90.0	120 / 1 / 60	ALL
ECH-03	PLANT SHOWER 104	1.8	50.0	90.0	120 / 1 / 60	ALL

NOTES
1. PROVIDE WITH UNIT MOUNTED INTEGRAL THERMOSTAT.

GRILLES, REGISTERS, AND DIFFUSERS

MARK	DESCRIPTION	AIRFLOW RANGE (CFM) / NECK SIZE (Ø" or W"xD")						
CD-A	SUPPLY 24"X24" SQUARE CEILING DIFFUSER	0 - 200	101 - 315	316 - 435	436 - 625	626 - 855	855 - 980	-
		6	8	10	12	14	15	-
RG-A / EG-A / TG-A	RETURN 24"X24" SQUARE CEILING GRILLE - DUCTED	0 - 150	151 - 295	296 - 470	471 - 700	701 - 1220	1220 - 1620	-
		6X6	8X8	10X10	12X12	14X14	16X16	-
RG-B / EG-B / TG-B	RETURN/TRANSFER 12"X12" SQUARE CEILING GRILLE - DUCTED	0 - 150	151 - 295	-	-	-	-	-
		6X6	8X8	-	-	-	-	-

NOTES:
1. CFM RANGE AND ASSOCIATED NECK SIZES ARE TYPICAL UNLESS NOTED OTHERWISE.
2. NC LEVELS FOR ALL DIFFUSERS SHALL BE LESS THAN 30.
3. DRUM LOUVERS SHALL BE PROVIDED WITH INTEGRAL VOLUME DAMPER BY MANUFACTURER.
4. DRUM LOUVER FRAMES SHALL BE CURVED AND INSTALLED DIRECTLY ON DUCT WITHOUT THE USE OF DUCT TAPS.
5. RETURN GRILLES, RR, SHALL BE PROVIDED WITH OPTIONAL VOLUME DAMPER BY MANUFACTURER.
6. DIFFUSERS SHALL BE STEEL CONSTRUCTION EXCEPT IN JANITOR CLOSETS AND BATHROOMS WHERE ALUMINUM DIFFUSERS SHALL BE PROVIDED.
7. EQUIPMENT INDICATED ON THIS SCHEDULE IS A BASIS FOR DESIGN. THE CONTRACTOR MAY SUBMIT EQUIVALENT SUBSTITUTIONS FOR APPROVAL.
8. ALL AIR TERMINALS LOCATED ABOVE HARD CEILINGS SHALL BE PROVIDED WITH INTEGRAL VOLUME DAMPER BY MANUFACTURER.

ELECTRIC INFRARED RADIANT UNIT HEATER SCHEDULE

MARK	LOCATION	CAPACITY (kW)	VOLTS / PH / HZ	MOUNTING HEIGHT (FT)	NOTES
IRH-01	PLANT	13.5	480 / 3 / 60	22	ALL
IRH-02	PLANT	13.5	480 / 3 / 60	22	ALL
IRH-03	PLANT	13.5	480 / 3 / 60	22	ALL
IRH-04	PLANT	13.5	480 / 3 / 60	22	ALL
IRH-05	PLANT	13.5	480 / 3 / 60	22	ALL
IRH-06	PLANT	13.5	480 / 3 / 60	22	ALL
IRH-07	PLANT	13.5	480 / 3 / 60	22	ALL
IRH-08	PLANT	13.5	480 / 3 / 60	22	ALL
IRH-09	PLANT	13.5	480 / 3 / 60	22	ALL
IRH-10	PLANT	13.5	480 / 3 / 60	22	ALL

NOTES
1. PROVIDE WITH UNIT MOUNTED INTEGRAL THERMOSTAT.
2. PROVIDE 30 DEGREE MOUNTING ANGLE.

ELECTRIC UNIT HEATER SCHEDULE

TAG	LOCATION	CAPACITY (KW)	AIR FLOW (CFM)	VOLTS / PH / HZ	MOUNTING HEIGHT (FT)	NOTES
EUH-01	MECH STOR 111	6.5	475	480 / 3 / 60	8	CEILING MOUNTED WITH UNIT MOUNTED THERMOSTAT
EUH-02	GENERATOR 110	14.1	625	480 / 3 / 60	8	CEILING MOUNTED WITH UNIT MOUNTED THERMOSTAT. CORROSION RESISTANT CONSTRUCTION
EUH-03	AOP REACTORS 109	15.8	700	480 / 3 / 60	8	CEILING MOUNTED WITH UNIT MOUNTED THERMOSTAT. CORROSION RESISTANT CONSTRUCTION
EUH-04	DRYER 108	7.9	350	480 / 3 / 60	8	CEILING MOUNTED WITH UNIT MOUNTED THERMOSTAT
EUH-05	HYDROGEN PEROXIDE RM 112	6.5	325	480 / 3 / 60	8	CEILING MOUNTED WITH UNIT MOUNTED THERMOSTAT. CORROSION RESISTANT CONSTRUCTION
EUH-06	CAUSTIC RM 113	7.9	350	480 / 3 / 60	8	CEILING MOUNTED WITH UNIT MOUNTED THERMOSTAT. CORROSION RESISTANT CONSTRUCTION
EUH-07	SODIUM HYPOCHLORITE RM 114	5.6	250	480 / 3 / 60	8	CEILING MOUNTED WITH UNIT MOUNTED THERMOSTAT. CORROSION RESISTANT CONSTRUCTION
EUH-08	OFFICE STORAGE 107	15.8	700	480 / 3 / 60	8	CEILING MOUNTED WITH UNIT MOUNTED THERMOSTAT
EUH-09	AOP REACTORS 109	15.8	700	480 / 3 / 60	8	CEILING MOUNTED WITH UNIT MOUNTED THERMOSTAT. CORROSION RESISTANT CONSTRUCTION

ISSUED FOR BID - FEBRUARY 2026

THIS DRAWING PRODUCED ON REVIT
DO NOT REVISE MANUALLY

"THIS DOCUMENT IS THE PROPERTY OF NAVAL FACILITIES ENGINEERING COMMAND, PREPARED BY TETRA TECH ENGINEERING CORPORATION PC, AND IS PROVIDED UPON THE CONDITION THAT IT WILL NOT BE REPRODUCED, COPIED, OR ISSUED TO A THIRD PARTY, AND WILL BE USED SOLELY FOR THE ORIGINAL INTENDED PURPOSE AND SOLELY FOR THE EXECUTION OR REVIEW OF THE ENGINEERING CONSTRUCTION OF THE PROJECT".

IT IS A VIOLATION OF THE NEW YORK STATE EDUCATION LAW, ARTICLE 145, FOR ANY PERSON, UNLESS UNDER THE DIRECTION OF A NEW YORK STATE LICENSED PROFESSIONAL ENGINEER, TO ALTER AN ITEM ON THIS DOCUMENT IN ANY WAY.

SYM	DESCRIPTION	DATE	APPR

NAVFAC

STATE OF NEW YORK · LUIS ESTEBAN RAMIREZ · 099098 · LICENSED PROFESSIONAL ENGINEER
4/22/20

TETRA TECH
www.tetratech.com
4433 CORPORATION LANE, SUITE 300
VIRGINIA BEACH, VA 23462
PHONE (757) 461-3766 FAX (757) 461-4148
AE INFO

APPROVED
FOR COMMANDER NAVFAC 4/30/2026

ACTIVITY
As per document from Nicole Coward, NAVFAC MIDLANT PLL/EV3

SATISFACTORY TO DATE 3/24/2026

DES PAD DRW TA CHK DB

PM/CM:
BRANCH MANAGER
CHIEF ENG/ARCH
FIRE PROTECTION

DEPARTMENT OF THE NAVY
NAVAL FACILITIES ENGINEERING SYSTEMS COMMAND ~ MID-ATLANTIC
NAVAL INDUSTRIAL RESERVE ORDNANCE PLANT
NAVAL WEAPONS INDUSTRIAL RESERVE PLANT
BETHPAGE, NEW YORK
PHASE III - GROUNDWATER TREATMENT PLANT
MECHANICAL SCHEDULES

SCALE AS NOTED
EPROJECT NO
CONSTR CONTR NO N62472-99-D-0032
NAVFAC DRAWING NO.
SHEET OF
MH601

DRAWFORM REVISION 23 AUGUST 2020

4/22/2026 11:45:13 AM MH601
Autodesk Docs://1120/80805-WEA/ Navy- Bethpage NY-Phase III IAR-1120/80805_Pruself_GWTP_v2023.rvt

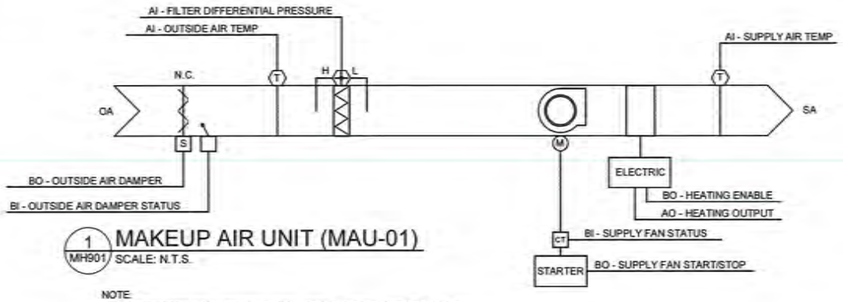

1 MH901 MAKEUP AIR UNIT (MAU-01)
SCALE: N.T.S.

NOTE:
1. CONTRACTOR SHALL PROVIDE FINAL SEQUENCE OF OPERATION FOR MANUFACTURERS CONTROLS WITH O&M MANUAL.

MAKEUP AIR UNIT (MAU-1)

RUN CONDITIONS - CONTINUOUS:
THE UNIT SHALL RUN BASED UPON AN OPERATOR ADJUSTABLE SCHEDULE. THE UNIT SHALL RUN AS FOLLOWS.

EMERGENCY SHUTDOWN:
THE UNIT SHALL SHUT DOWN AND GENERATE AN ALARM UPON RECEIVING AN EMERGENCY SHUTDOWN SIGNAL.

OUTSIDE AIR AIR DAMPERS:
THE OUTSIDE AIR DAMPER AIR SHALL OPEN ANYTIME THE UNIT RUNS AND SHALL CLOSE ANYTIME THE UNIT STOPS. THE SUPPLY FAN SHALL START ONLY AFTER THE DAMPER STATUSES HAVE PROVEN THE DAMPER IS OPEN. THE OUTSIDE AIR DAMPERS SHALL CLOSE 4 SEC (ADJ.) AFTER THE FAN STOPS.

ALARMS SHALL BE PROVIDED AS FOLLOWS:

- OUTSIDE AIR DAMPER FAILURE: COMMANDED OPEN, BUT THE STATUS IS CLOSED.
- OUTSIDE AIR DAMPER IN HAND: COMMANDED CLOSED, BUT THE STATUS IS OPEN.

SUPPLY FAN:
THE SUPPLY FAN SHALL RUN ANYTIME THE UNIT IS COMMANDED TO RUN. TO PREVENT SHORT CYCLING, THE SUPPLY FAN SHALL HAVE A USER DEFINABLE (ADJ.) MINIMUM RUNTIME, UNLESS SHUTDOWN ON SAFETIES.

ALARMS SHALL BE PROVIDED AS FOLLOWS:

- SUPPLY FAN FAILURE: COMMANDED ON, BUT THE STATUS IS OFF.
- SUPPLY FAN IN HAND: COMMANDED OFF, BUT THE STATUS IS ON.
- SUPPLY FAN RUNTIME EXCEEDED: STATUS RUNTIME EXCEEDS A USER DEFINABLE LIMIT (ADJ.).

SUPPLY AIR TEMPERATURE SETPOINT - FIXED:
THE CONTROLLER SHALL MONITOR THE SUPPLY AIR TEMPERATURE AND SHALL MAINTAIN:

- 68°F (ADJ.) SUPPLY AIR TEMPERATURE DURING HEATING MODE.

ELECTRIC HEATING:
THE CONTROLLER SHALL MEASURE THE SUPPLY AIR TEMPERATURE AND MODULATE THE HEATING TO MAINTAIN ITS HEATING SETPOINT. TO PREVENT SHORT CYCLING, THE HEATER SHALL HAVE A USER DEFINABLE (ADJ.) MINIMUM RUNTIME.

THE HEATING SHALL BE ENABLED WHENEVER:

- OUTSIDE AIR TEMPERATURE IS LESS THAN 60°F (ADJ.).
- AND THE SUPPLY AIR TEMPERATURE IS BELOW HEATING SETPOINT.
- AND THE FAN STATUS IS ON.

FILTER DIFFERENTIAL PRESSURE MONITORS:
THE CONTROLLERS SHALL MONITOR THE DIFFERENTIAL PRESSURE ACROSS THE FILTER.

ALARMS SHALL BE PROVIDED AS FOLLOWS:

- FILTER CHANGE REQUIRED: FILTER DIFFERENTIAL PRESSURE EXCEEDS A USER DEFINABLE LIMIT (ADJ.).

AIR TEMPERATURE MONITORING:
THE CONTROLLER SHALL MONITOR THE SUPPLY AIR TEMPERATURE.

ALARMS SHALL BE PROVIDED AS FOLLOWS:

- HIGH SUPPLY AIR TEMP: IF THE SUPPLY AIR TEMPERATURE IS GREATER THAN 90°F (ADJ.).
- LOW SUPPLY AIR TEMP: IF THE SUPPLY AIR TEMPERATURE IS LESS THAN 55°F (ADJ.)

MAKE-UP AIR UNIT (MAU-1)

POINT NAME	HARDWARE POINTS AI	AO	BI	BO	SOFTWARE POINTS AV	BV	SCHED	TREND	ALARM	SHOW ON GRAPHIC
FILTER DIFFERENTIAL PRESSURE	X							X		
OUTSIDE AIR TEMP	X							X		X
SUPPLY AIR TEMP	X							X		X
HEATING OUTPUT		X						X		X
OUTSIDE AIR DAMPER STATUS			X					X		X
SUPPLY FAN STATUS			X					X		X
HEATING ENABLE				X				X		X
OUTSIDE AIR DAMPER				X				X		X
SUPPLY FAN START/STOP				X				X		X
SUPPLY AIR TEMP SETPOINT					X			X		X
EMERGENCY SHUTDOWN						X		X	X	X
SCHEDULE							X			
FILTER CHANGE REQUIRED									X	X
HIGH SUPPLY AIR TEMP									X	
LOW SUPPLY AIR TEMP									X	
OUTSIDE AIR DAMPER FAILURE									X	
OUTSIDE AIR DAMPER IN HAND									X	
SUPPLY FAN FAILURE									X	
SUPPLY FAN IN HAND									X	
SUPPLY FAN RUNTIME EXCEEDED									X	
TOTALS	3	1	2	3	1	1	1	11	9	11
	TOTAL HARDWARE (9)				TOTAL SOFTWARE (23)					

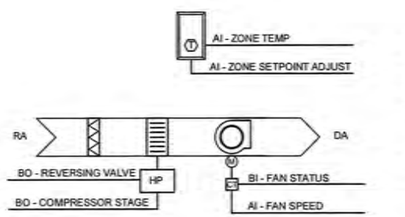

2 MH901 SPLIT SYSTEM HEAT PUMP
SCALE: N.T.S.

SPLIT SYSTEM HEAT PUMP (AHU-1 AND AHU-2)

RUN CONDITIONS - CONTINUOUS: THE UNITS ARE FULLY REDUNDANT. UPON FAILURE OF A UNIT, THE SECOND UNIT SHALL START. THE UNIT SHALL BE ENABLED TO RUN CONTINUOUSLY AS NEEDED TO MAINTAIN:

- A 75°F (ADJ.) COOLING SETPOINT
- A 70°F (ADJ.) HEATING SETPOINT.

ALARMS SHALL BE PROVIDED AS FOLLOWS:

- HIGH ZONE TEMP: IF THE ZONE TEMPERATURE IS GREATER THAN THE COOLING SETPOINT BY A USER DEFINABLE AMOUNT (ADJ.).
- LOW ZONE TEMP: IF THE ZONE TEMPERATURE IS LESS THAN THE HEATING SETPOINT BY A USER DEFINABLE AMOUNT (ADJ.).

ZONE SETPOINT ADJUST:
THE OCCUPANT SHALL BE ABLE TO ADJUST THE ZONE TEMPERATURE HEATING AND COOLING SETPOINTS AT THE ZONE SENSOR.

CONDENSATE OVERFLOW:
THE UNIT SHALL SHUT DOWN AND GENERATE AN ALARM UPON DETECTING CONDENSATE IN THE AUXILIARY DRAIN PAN AS SENSED BY THE WATER-LEVEL DETECTION SWITCH.

FAN:
THE FAN SHALL RUN ANYTIME THE UNIT IS COMMANDED TO RUN, UNLESS SHUTDOWN ON SAFETIES. THE FAN SPEEDS SHALL BE INDEXED

PER THE UNIT'S INTERNAL CONTROL SEQUENCE. THE UNIT SHALL PROVIDE THE FOLLOWING STATUS OUTPUTS TO THE DDC SYSTEM:

- FAN STATUS
- FAN SPEED

HEATING AND COOLING - VARIABLE SPEED COMPRESSOR:
THE CONTROLLER SHALL MEASURE THE ZONE TEMPERATURE AND CYCLE THE COMPRESSOR TO MAINTAIN ITS SETPOINT. TO PREVENT SHORT CYCLING, THE COMPRESSOR SHALL HAVE A USER DEFINABLE (ADJ.) MINIMUM RUNTIME. THE COMPRESSOR SHALL RUN SUBJECT TO ITS OWN INTERNAL SAFETIES AND CONTROLS.

THE HEATING SHALL BE ENABLED WHENEVER:

- THE ZONE TEMPERATURE IS BELOW THE HEATING SETPOINT
- AND THE FAN IS ON.
- AND THE REVERSING VALVE IS IN HEAT MODE.

THE COOLING SHALL BE ENABLED WHENEVER:

- THE ZONE TEMPERATURE IS ABOVE THE COOLING SETPOINT
- AND THE FAN IS ON.
- AND THE REVERSING VALVE IS IN COOL MODE.

ON MODE CHANGE, THE COMPRESSOR SHALL BE DISABLED AND REMAIN OFF UNTIL AFTER THE REVERSING VALVE HAS CHANGED POSITION.

ALARMS SHALL BE PROVIDED AS FOLLOWS:

- COMPRESSOR RUNTIME EXCEEDED: THE COMPRESSOR RUNTIME EXCEEDS A USER DEFINABLE LIMIT (ADJ.).

FAN STATUS:
THE CONTROLLER SHALL MONITOR THE FAN STATUS.

ALARMS SHALL BE PROVIDED AS FOLLOWS:

- FAN FAILURE: COMMANDED ON, BUT THE STATUS IS OFF.
- FAN IN HAND: COMMANDED OFF, BUT THE STATUS IS ON.
- FAN RUNTIME EXCEEDED: FAN STATUS RUNTIME EXCEEDS A USER DEFINABLE LIMIT (ADJ.)

SPLIT SYSTEM HEAT PUMP (HP-1, HP-2, AND HP-3)

POINT NAME	HARDWARE POINTS AI	AO	BI	BO	SOFTWARE POINTS AV	BV	SCHED	TREND	ALARM	SHOW ON GRAPHIC
FAN SPEED	X							X		X
ZONE SETPOINT ADJUST	X									X
ZONE TEMP	X							X		X
FAN STATUS			X					X		X
COMPRESSOR STAGE				X				X		X
REVERSING VALVE				X				X		X
COOLING SETPOINT					X			X		X
HEATING SETPOINT					X			X		X
COMPRESSOR RUNTIME EXCEEDED									X	
CONDENSATE OVERFLOW									X	
FAN FAILURE									X	
FAN IN HAND									X	
FAN RUNTIME EXCEEDED									X	
HIGH ZONE TEMP									X	
LOW ZONE TEMP									X	
TOTALS	3	0	1	2	2	0	0	7	7	8
	TOTAL HARDWARE (6)				TOTAL SOFTWARE (16)					

ISSUED FOR BID - FEBRUARY 2026

THIS DRAWING PRODUCED ON REVIT
DO NOT REVISE MANUALLY

"THIS DOCUMENT IS THE PROPERTY OF NAVAL FACILITIES ENGINEERING COMMAND, PREPARED BY TETRA TECH ENGINEERING CORPORATION P.C. AND IS PROVIDED UPON THE CONDITION THAT IT WILL NOT BE REPRODUCED, COPIED, OR ISSUED TO A THIRD PARTY, AND WILL BE USED SOLELY FOR THE ORIGINAL INTENDED PURPOSE AND SOLELY FOR THE EXECUTION OR REVIEW OF THE ENGINEERING CONSTRUCTION OF THE PROJECT".

IT IS A VIOLATION OF THE NEW YORK STATE EDUCATION LAW, ARTICLE 145, FOR ANY PERSON, UNLESS UNDER THE DIRECTION OF A NEW YORK STATE LICENSED PROFESSIONAL ENGINEER, TO ALTER AN ITEM ON THIS DOCUMENT IN ANY WAY.

SYM	DESCRIPTION	DATE	APPR

NAVFAC

STATE OF NEW YORK · STEVEN ESTEBAN RAMIREZ · 099098 · LICENSED PROFESSIONAL ENGINEER
4/22/20

TETRA TECH
www.tetratech.com
4420 CORPORATION LANE, SUITE 350
VIRGINIA BEACH, VA 23462
PHONE (757) 490-3700 FAX (757) 490-4140

APPROVED
FOR COMMANDER NAVFAC

ACTIVITY
As per document from Nicole Coward, NAVFAC MIDLANT PLL/EV3
SATISFACTORY TO DATE 3/24/2026
DES PAD DRN TA CHK DB
PM/CM
BRANCH MANAGER
CHIEF ENGINEER
FIRE PROTECTION

DEPARTMENT OF THE NAVY
NAVAL FACILITIES ENGINEERING SYSTEMS COMMAND
NAVAL FACILITIES ENGINEERING COMMAND – MID-ATLANTIC
NAVAL INDUSTRIAL RESERVE ORDNANCE PLANT
NAVAL WEAPONS INDUSTRIAL RESERVE PLANT
BETHPAGE, NEW YORK
PHASE III - GROUNDWATER TREATMENT PLANT
MECHANICAL CONTROLS

SCALE AS NOTED
EFPROJECT NO.
CONSTR. CONTR. NO. N62472-89-D-0202
NAVFAC DRAWING NO.
SHEET OF
MH901
DRAW FOR REVISION 25 AUGUST 2020

4/22/2026 11:45:14 AM MH901
Autodesk Docs://120308005-WE24 Navy Bethpage NY Phase III IMP-1120308005_PhaseIII_GWTP_v2023.rvt

ELECTRIC RADIANT HEATER

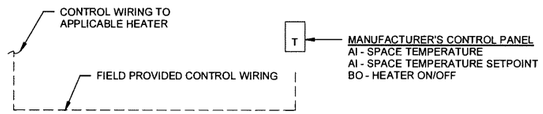

ELECTRIC RADIANT HEATER SEQUENCE OF OPERATIONS

PROVIDE MANUFACTURER'S CONTROL PANEL TO OPERATE HEATERS AS A SINGLE UNIT. COORDINATE CONTROL PANEL WITH BUILDING BAS SYSTEM.

WHEN SPACE TEMPERATURE FALLS BELOW SETPOINT (WITH FACTORY SET DEADBAND) THE HEATING EQUIPMENT SHALL ENERGIZE UNTIL SPACE TEMPERATURE RISES ABOVE SETPOINT (WITH FACTORY SET DEADBAND). SPACE TEMPERATURES SHALL BE INITIALLY SET FOR 59°F. INFRARED HEATERS SHALL BE STANDALONE AND DO NOT REQUIRE BAS INTERFACE.

ELECTRIC RADIANT HEATER

	HARDWARE POINTS				SOFTWARE POINTS					
POINT NAME	AI	AO	BI	BO	AV	BV	SCHED	TREND	ALARM	SHOW ON GRAPHIC
SPACE TEMP	X							X		X
SPACE TEMP SETPOINT	X							X		X
ON/OFF				X				X		X
EMERGENCY SHUTDOWN						X		X	X	X
LOW SPACE TEMP										X
HIGH SPACE TEMP										X
TOTALS	2	0	0	1	0	1	0	4	1	6
TOTAL HARDWARE (3)					TOTAL SOFTWARE (6)					

1 MH902 ELECTRIC RADIANT HEATER CONTROLS
SCALE: N.T.S.

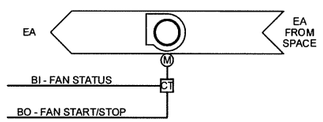

2 MH902 EXHAUST FAN - ON / OFF
SCALE: N.T.S.

EXHAUST FAN - ON/OFF

RUN CONDITIONS :
EF-1, EF-4 - BY LIGHT SWITCH.
EF-2, EF-5, EF-6, EF-7, EF-8, EF-9, EF-10 - CONTINUOUS OPERATION.
EF-3 - THERMOSTAT

FAN STATUS:
THE CONTROLLER SHALL MONITOR THE FAN STATUS.
ALARMS SHALL BE PROVIDED AS FOLLOWS:

- FAN FAILURE: COMMANDED ON, BUT THE STATUS IS OFF.
- FAN IN HAND: COMMANDED OFF, BUT THE STATUS IS ON.
- FAN RUNTIME EXCEEDED: FAN STATUS RUNTIME EXCEEDS A USER DEFINABLE LIMIT (ADJ.).

EXHAUST FAN - ON/OFF

	HARDWARE POINTS				SOFTWARE POINTS					
POINT NAME	AI	AO	BI	BO	AV	BV	SCHED	TREND	ALARM	SHOW ON GRAPHIC
FAN STATUS			X					X		X
FAN START/STOP				X				X		X
FAN FAILURE									X	X
FAN IN HAND									X	X
FAN RUNTIME EXCEEDED									X	X
TOTALS	0	0	1	1	0	0	0	2	3	5
TOTAL HARDWARE (2)					TOTAL SOFTWARE (5)					

ISSUED FOR BID - FEBRUARY 2026

THIS DRAWING PRODUCED ON REVIT
DO NOT REVISE MANUALLY

"THIS DOCUMENT IS THE PROPERTY OF NAVAL FACILITIES ENGINEERING COMMAND, PREPARED BY TETRA TECH ENGINEERING CORPORATION PC, AND IS PROVIDED UPON THE CONDITION THAT IT WILL NOT BE REPRODUCED, COPIED, OR ISSUED TO A THIRD PARTY, AND WILL BE USED SOLELY FOR THE ORIGINAL INTENDED PURPOSE AND SOLELY FOR THE EXECUTION OR REVIEW OF THE ENGINEERING CONSTRUCTION OF THE PROJECT".

IT IS A VIOLATION OF THE NEW YORK STATE EDUCATION LAW, ARTICLE 145, FOR ANY PERSON, UNLESS UNDER THE DIRECTION OF A NEW YORK STATE LICENSED PROFESSIONAL ENGINEER, TO ALTER AN ITEM ON THIS DOCUMENT IN ANY WAY.

SYM	DESCRIPTION	DATE	APPR

NAVFAC

STATE OF NEW YORK · LUIS ESTEBAN RAMIREZ · 099098 · LICENSED PROFESSIONAL ENGINEER
4/22/20

TETRA TECH
www.tetratech.com
4433 CORPORATION LANE, SUITE 300
VIRGINIA BEACH, VA 23462
PHONE: (757) 461-3782 FAX: (757) 461-4146
AE INFO

APPROVED
FOR COMMANDER NAVFAC
ACTIVITY
As per document from Nicole Coward, NAVFAC MIDLANT PLL/EV3
SATISFACTORY TO DATE 3/24/2026
DES PAD DRW TA CHK DB
FM/DM
BRANCH MANAGER
CHIEF ENG/ARCH
FIRE PROTECTION

DEPARTMENT OF THE NAVY
NAVAL FACILITIES ENGINEERING SYSTEMS COMMAND ~ MID-ATLANTIC
NAVAL INDUSTRIAL RESERVE ORDNANCE PLANT
NAVAL WEAPONS INDUSTRIAL RESERVE PLANT
BETHPAGE, NEW YORK
PHASE III - GROUNDWATER TREATMENT PLANT
MECHANICAL CONTROLS

SCALE AS NOTED
EPROJECT NO :
CONSTR CONTR NO N52472-95-D-0032
NAVFAC DRAWING NO.
SHEET OF
MH902

DRAWFORM REVISION 23 AUGUST 2020

4/22/2026 11:45:15 AM MH902
Autodesk Docs://12GB905-WE24 Navy Bethpage NY-Phase III IMP-112GB905_PhaseIII_GWTP_v2023.rvt

ELECTRIC METER CONTROL LOGIC DIAGRAM AND SCHEMATIC

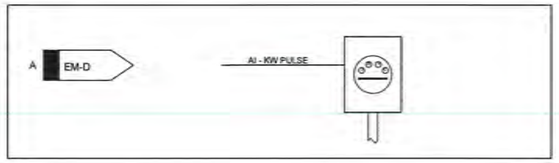

ELECTRIC METER:

INSTALL DDC HARDWARE TO PERFORM THIS SEQUENCE OF OPERATION AND TO PROVIDE INPUTS AND OUTPUTS AS SPECIFIED AND SHOWN ON THE POINTS SCHEDULE.

ELECTRICAL CONSUMPTION:

THE CONTROLLER SHALL MONITOR THE ELECTRIC METER FOR ELECTRIC CONSUMPTION ON A CONTINUAL BASIS. THESE VALUES SHALL BE MADE AVAILABLE TO THE SYSTEM AT ALL TIMES.

ALARMS:

METER FAILURE: SENSOR READING INDICATES A LOSS OF PULSE OUTPUT FROM THE ELECTRIC METER.

MONITORING:
PEAK DEMAND HISTORY: THE CONTROLLER SHALL MONITOR AND RECORD THE PEAK (HIGH AND LOW) DEMAND READINGS FROM THE ELECTRIC METER. PEAK READINGS SHALL BE RECORDED ON A DAILY, MONTH-TO-DATE, AND YEAR-TO-DATE BASIS.
USAGE HISTORY: THE CONTROLLER SHALL MONITOR AND RECORD ELECTRIC METER READINGS SO AS TO PROVIDE A POWER CONSUMPTION HISTORY. USAGE READINGS SHALL BE RECORDED ON A DAILY, MONTH-TO-DATE, AND YEAR-TO-DATE BASIS.

WATER METER CONTROL LOGIC DIAGRAM AND SCHEMATIC

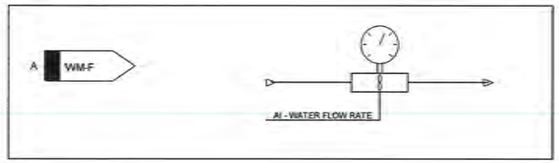

WATER METER:

INSTALL DDC HARDWARE TO PERFORM THIS SEQUENCE OF OPERATION AND TO PROVIDE INPUTS AND OUTPUTS AS SPECIFIED AND SHOWN ON THE POINTS SCHEDULE.

ELECTRICAL CONSUMPTION:

THE CONTROLLER SHALL MONITOR THE WATER METER FOR ELECTRIC CONSUMPTION ON A CONTINUAL BASIS. THESE VALUES SHALL BE MADE AVAILABLE TO THE SYSTEM AT ALL TIMES.

ALARMS:

METER FAILURE: SENSOR READING INDICATES A LOSS OF PULSE OUTPUT FROM THE WATER METER.

MONITORING:
PEAK DEMAND HISTORY: THE CONTROLLER SHALL MONITOR AND RECORD THE PEAK (HIGH AND LOW) DEMAND READINGS FROM THE WATER METER. PEAK READINGS SHALL BE RECORDED ON A DAILY, MONTH-TO-DATE, AND YEAR-TO-DATE BASIS.
USAGE HISTORY: THE CONTROLLER SHALL MONITOR AND RECORD WATER METER READINGS SO AS TO PROVIDE A POWER CONSUMPTION HISTORY. USAGE READINGS SHALL BE RECORDED ON A DAILY, MONTH-TO-DATE, AND YEAR-TO-DATE BASIS.

FUNCTION	POINT NAME	DESCRIPTION	DDC HARDWARE ID	SETTING (WITH UNITS)	RANGE (WITH UNITS)	IO TYPE	HOA REQ'D	CONFIG. TYPE	M&C VIEW AND OVRD	LDP VIEW AND OVRD	TREND REQ'D	ALARMING: ALARM CONDITION (SEE NOTES)	ALARMING: ALARM PRIORITY	ALARMING: M&C ROUTING
CONSUMPTION METERING	EM-D	ELECTRIC METER DEMAND (KW)	<____>	-	-	PULSE	-	-	V	-	Y	METER FAIL	CRIT	[___]
	WM-F	WATER METER FLOW (GPM)	<____>	-	-	PULSE	-	-	V	-	Y	METER FAIL	CRIT	[___]
CONSUMPTION MONITORING	EM-D	KW DEMAND	<____>	-	-	-	-	-	V	-	Y	-	-	-
	EM-PMTD	KW PEAK MONTH TO DATE	<____>	-	-	-	-	-	V	-	Y	-	-	-
	EM-PD	KW PEAK TODAY	<____>	-	-	-	-	-	V	-	Y	-	-	-
	EM-PYTD	KW PEAK YEAR TO DATE	<____>	-	-	-	-	-	V	-	Y	-	-	-
	EM-D	KWH TODAY	<____>	-	-	-		-	V	-	Y	-	-	-
	EM-MTD	MWH MONTH TO DATE	<____>	-	-	-	-	-	V	-	Y	-	-	-
	EM-YTD	MWH YEAR TO DATE	<____>	-	-	-	-	-	V	-	Y	-	-	-
	WM-D	WATER DEMAND (GAL)	<____>	-	-	-	-	-	V	-	Y	-	-	-
	WM-PMTD	WATER PEAK MONTH TO DATE	<____>	-	-	-	-	-	V	-	Y	-	-	-
	WM-PD	WATER PEAK TODAY	<____>	-	-	-	-	-	V	-	Y	-	-	-
	WM-PYTD	WATER PEAK YEAR TO DATE	<____>	-	-	-	-	-	V	-	Y	-	-	-
	WM-MTD	WATER USAGE MONTH TO DATE	<____>	-	-	-		-	V	-	Y	-	-	-
	WM-UD	WATER USAGE TODAY	<____>	-	-	-	-	-	V	-	Y	-	-	-
	WM-YTD	WATER USAGE YEAR TO DATE	<____>	-	-	-	-	-	V	-	Y	-	-	-

Notes:

1. THE CONTRACTOR SHALL COMPLETE THE POINTS SCHEDULE AS INDICATED IN THE SPECIFICATION AND IN ACCORDANCE WITH THE POINTS SCHEDULE INSTRUCTIONS DRAWING.

1 / MH903 UTILITY METER CONTROLS
SCALE: N.T.S.

ISSUED FOR BID - FEBRUARY 2026

THIS DRAWING PRODUCED ON REVIT
DO NOT REVISE MANUALLY

"THIS DOCUMENT IS THE PROPERTY OF NAVAL FACILITIES ENGINEERING COMMAND, PREPARED BY TETRA TECH ENGINEERING CORPORATION PC, AND IS PROVIDED UPON THE CONDITION THAT IT WILL NOT BE REPRODUCED, COPIED, OR ISSUED TO A THIRD PARTY, AND WILL BE USED SOLELY FOR THE ORIGINAL INTENDED PURPOSE AND SOLELY FOR THE EXECUTION OR REVIEW OF THE ENGINEERING CONSTRUCTION OF THE PROJECT".

IT IS A VIOLATION OF THE NEW YORK STATE EDUCATION LAW, ARTICLE 145, FOR ANY PERSON, UNLESS UNDER THE DIRECTION OF A NEW YORK STATE LICENSED PROFESSIONAL ENGINEER, TO ALTER AN ITEM ON THIS DOCUMENT IN ANY WAY.

SYM	DESCRIPTION	DATE	APPR

NAVFAC

STATE OF NEW YORK · JUAN ESTEBAN RAMIREZ · 099098 · LICENSED PROFESSIONAL ENGINEER
4/22/20

TETRA TECH
4420 CORPORATION LANE, SUITE 300
VIRGINIA BEACH, VA 23462
PHONE: (757) 451-3788 FAX: (757) 451-6140
HE INFO

APPROVED
FOR COMMANDER NAVFAC

ACTIVITY
As per document from Nicole Coward, NAVFAC MIDLANT PLL/EV3
SATISFACTORY TO DATE 3/24/2026
DES PAD DRW TA CHK DB
PM/CM
BRANCH MANAGER
CHIEF ENG/ARCH
FIRE PROTECTION

DEPARTMENT OF THE NAVY
NAVAL FACILITIES ENGINEERING SYSTEMS COMMAND – MID-ATLANTIC
NAVAL FACILITIES ENGINEERING COMMAND
NAVAL INDUSTRIAL RESERVE ORDNANCE PLANT
NAVAL WEAPONS INDUSTRIAL RESERVE PLANT
BETHPAGE, NEW YORK
PHASE III - GROUNDWATER TREATMENT PLANT
MECHANICAL CONTROLS

SCALE AS NOTED
EFPROJECT NO.
CONSTR. CONTR. NO N62472-95-D-0202
NAVFAC DRAWING NO.
SHEET OF
MH903

DRAWFORM REVISION: 23 AUGUST 2023

4/22/2026 11:45:15 AM MH903
Autodesk Docs://1120/00005-W524 Navy- Bethpage NY-Phase III AIP-1120/00005_Pressell_GWTP_v2023.rvt

PLUMBING LEGEND

- SANITARY SEWER PIPING
- COLD WATER PIPING
- HOT WATER PIPING
- HOT WATER RECIRCULATION PIPING
- VENT PIPING
- STORM PIPING
- HIDDEN / UNDERGROUND PIPING
- VENT THROUGH ROOF
- CLEAN OUT, EXPOSED
- CLEAN OUT
- DOUBLE YARD CLEANOUT
- FLOOR DRAIN
- TPL — TRAP PRIMER LINE
- HB — HOSE BIBB WINTEGRAL VACUUM BREAKER (INTERIOR SURFACE)
- WH — WALL HYDRANT WINTEGRAL VACUUM BREAKER (EXTERIOR SURFACE)
- PIPE CAP
- PIPE CONNECTION, BOTTOM
- PIPE CONNECTION, TOP
- PIPE ELBOW, TURNED UP
- PIPE ELBOW, TURNED DOWN
- PIPE TEE
- ANCHOR, INTERMEDIATE
- BUTTERFLY VALVE
- GATE VALVE
- BALL VALVE
- CHECK VALVE
- STRAINER VALVE
- STRAINER (BLOW-OFF)
- GAS COCK/GAS STOP
- THERMOMETER
- BALANCING VALVE
- THERMOSTATIC MIXING VALVE
- SOLENOID VALVE
- RELIEF VALVE
- WATER HAMMER ARRESTER/SHOCK ABSORBER
- UNION
- PUMP (SCHEMATIC)
- W — WATER METER
- BFP — BACK FLOW PREVENTER
- M — GAS METER
- ø — DIAMETER

SK - #	FIXTURE TAG
	LIMIT OF DEMOLITION
	CONNECT TO EXISTING
	KEYED NOTE
3/4"ø HW	PIPE SIZE AND SYSTEM TAG
	AREA OUT OF SCOPE
	AREA OF DEMOLITION

NOTES:

1. THIS LEGEND IS FOR REFERENCE ONLY.
2. ALL SYMBOLS WITHIN THIS LEGEND MAY NOT APPLY TO THIS PROJECT.

PLUMBING ABBREVIATIONS

(D)	DEMOLITION
(E)	EXISTING
(R)	RELOCATED
AFF	ABOVE FINISHED FLOOR
AFG	ABOVE FINISHED GRADE
APPROX	APPROXIMATE
BFF	BELOW FINISHED FLOOR
BFP	BACKFLOW PREVENTER
BT	BLADDER TANK
CA	COMPRESSED AIR
CAP	CAPACITY
CO	CLEAN OUT
COND	CONDENSATE
CONN	CONNECTION
CONT	CONTINUATION
D	DRAIN
DCW	DOMESTIC COLD WATER
DEG	DEGREES
DEMO	DEMOLITION
DIA	DIAMETER
DN	DOWN
DS	DOWNSPOUT
DWG	DRAWING
EA	EACH
EEW	EMERGENCY EYE/FACE WASH
ENT	ENTERING
ESS	EMERGENCY SAFETY SHOWER
ET	EXPANSION TANK
F	FAHRENHEIT
FCO	FLOOR CLEAN OUT
FD	FLOOR DRAIN
FH	FIRE HYDRANT
FM	FLOW METER
FPH	FREEZE PROOF HYDRANT
FPM	FEET PER MINUTE
GAL	GALLONS
GD	GARBAGE DISPOSAL
GM	GAS METER
GPM	GALLONS PER MINUTE
GWH	GAS WATER HEATER
HB	HOSE BIBB
HD	HEAD
HO	HUB OUTLET
HP	HORSEPOWER
HW	HOT WATER
HWR	HOT WATER RETURN
ID	INSIDE DIAMETER/DIMENSION
IE	INVERT ELEVATION
IMVB	ICE MAKER VALVE BOX
IN	INCH
IW	INDUSTRIAL WASTE
IWH	INSTANTANEOUS WATER HEATER
LAV	LAVATORY
M	METER
MAX	MAXIMUM
MEZZ	MEZZANINE
MFR	MANUFACTURER
MIN	MINIMUM
MISC	MISCELLANEOUS
N/A	NOT APPLICABLE
NG	NATURAL GAS
NPW	NON-POTABLE WATER
NTS	NOT TO SCALE
OD	OUTSIDE DIAMETER
PCV	PRESSURE CONTROL VALVE
PD	PRESSURE DROP
PG	PRESSURE GAUGE
PRV	PRESSURE REDUCING VALVE
PSI	POUNDS PER SQUARE INCH
PVC	POLYVINYL CHLORIDE
PW	PROCESS WASTE
R	RADIUS
RD	ROOF DRAIN
RP	RECIRCULATION PUMP
RPBP	REDUCED PRESSURE BACKFLOW PREVENTER
RPM	REVOLUTIONS PER MINUTE
SAN	SANITARY SEWER PIPING
SK	SINK
SP	SUMP PUMP
SPEC	SPECIFICATION
STD	STANDARD
STO	STORM
SW	SERVICE WATER
TBD	TO BE DETERMINED
TCV	TEMPERING VALVE
TD	TRENCH DRAIN
TEMP	TEMPERATURE
TMV	THERMOSTATIC MIXING VALVE
TP	TRAP PRIMER
TW	TEPID WATER
TYP	TYPICAL
UR	URINAL
V	VENT
VIF	VERIFY IN FIELD
VS	VENT STACK
VTR	VENT THRU ROOF
W	WASTE
WB	WASHER BOX
WC	WATER CLOSET
WCO	WALL CLEAN OUT
WG	WATER GAUGE
WPD	WATER PRESSURE DROP

PLUMBING GENERAL NOTES

GENERAL NOTES

1. THESE GENERAL NOTES APPLY TO ALL SHEETS. REFER TO INDIVIDUAL SHEETS FOR SHEET NOTES.
2. CONTRACT DOCUMENT DRAWINGS ARE DIAGRAMMATIC AND ARE INTENDED TO CONVEY SCOPE AND GENERAL ARRANGEMENT ONLY. DO NOT SCALE FOR MATERIAL QUANTITIES. ALL SCALING SHOULD BE REFERENCED TO ARCHITECTURAL PLANS ONLY.
3. ALL EQUIPMENT AND PIPING SHALL BE INSTALLED IN COMPLIANCE WITH THE CODES LISTED IN THE TABLE ABOVE.
4. ALL INTERIOR FLOOR DRAINS AND OPEN RECEPTACLES WITH TRAPS SHALL BE PROTECTED BY A TRAP PRIMER.
5. WATER LINES SHALL NOT BE ROUTED ABOVE ANY ELECTRICAL ROOMS, ELECTRICAL PANELS, OR TELEPHONE ROOMS.
6. CONTRACTOR IS RESPONSIBLE FOR COORDINATION WITH OTHER TRADES TO MINIMIZE SPATIAL CONFLICTS.
7. INSTALL BOTTOM OF ALL EXTERIOR WALL HYDRANTS AT 24" ABOVE FINISH GRADE.
8. PROVIDE ACCESS PANELS WITH SQUARE HINGED, LOCKING DOORS FOR ALL CONCEALED VALVES, SHOCK ABSORBERS AND TRAP PRIMERS.
9. CONTRACTOR SHALL VERIFY ALL FIELD CONDITIONS AND DIMENSIONS BEFORE CONSTRUCTION BEGINS.
10. PROVIDE ISOLATION VALVES AT ALL PIPE CONNECTIONS TO EQUIPMENT.
11. COORDINATE NEW WATER METER LOCATION WITH LOCAL UTILITY AUTHORITY.
12. PROVIDE WALL PIPE PENETRATIONS AS REQUIRED WHERE PIPE ENTERS BUILDING. SLEEVE AND SEAL OPENING WITH CAULKING AND ESCUTCHEON FOR A WATER-TIGHT INSTALLATION.

EQUIPMENT NOTES

1. INSTALL ALL PLUMBING EQUIPMENT AND APPURTENANCES IN ACCORDANCE WITH MANUFACTURER'S RECOMMENDATIONS, CONTRACT DOCUMENTS, AND APPLICABLE CODES AND REGULATIONS.
2. WHERE TWO OR MORE ITEMS OF THE SAME TYPE OF EQUIPMENT ARE REQUIRED, THE PRODUCT OF ONE MANUFACTURER SHALL BE USED.
3. IDENTIFY ALL NEW PLUMBING EQUIPMENT WITH NAMEPLATES PERMANENTLY ENGRAVED WITH 1/2 INCH HIGH WHITE LETTERS ON A BLACK BACKGROUND. IDENTIFY EQUIPMENT WITH SYMBOLS SHOWN ON THE PLANS AND AREA SERVED DESCRIPTION.
4. PROVIDE FLEXIBLE PIPING CONNECTIONS TO ALL OPERATING EQUIPMENT, UNO.
5. ALL PLUMBING EQUIPMENT PADS SHALL BE FURNISHED AND INSTALLED BY THE GENERAL CONTRACTOR.
6. EQUIPMENT AND APPLIANCES SHALL BE ACCESSIBLE FOR SERVICE, INSPECTION, REPAIR AND REPLACEMENT WITHOUT REMOVING PERMANENT CONSTRUCTION. SUFFICIENT CLEARANCE SHALL BE MAINTAINED TO PERMIT CLEANING, REPLACEMENT OF PARTS, CONTROLS AND LUBRICATION OF MOVING PARTS.

APPLICABLE CODES FOR PLUMBING WORK	
PLUMBING	INTERNATIONAL PLUMBING CODE (IPC 2024)
PLUMBING	UFC 3_4200-01
FIRE PROTECTION	NATIONAL FIRE PROTECTION ASSOCIATION (NFPA 13)

ISSUED FOR BID - FEBRUARY 2026

THIS DRAWING PRODUCED ON REVIT
DO NOT REVISE MANUALLY

"THIS DOCUMENT IS THE PROPERTY OF NAVAL FACILITIES ENGINEERING COMMAND, PREPARED BY TETRA TECH ENGINEERING CORPORATION PC, AND IS PROVIDED UPON THE CONDITION THAT IT WILL NOT BE REPRODUCED, COPIED, OR ISSUED TO A THIRD PARTY, AND WILL BE USED SOLELY FOR THE ORIGINAL INTENDED PURPOSE AND SOLELY FOR THE EXECUTION OR REVIEW OF THE ENGINEERING CONSTRUCTION OF THE PROJECT".

IT IS A VIOLATION OF THE NEW YORK STATE EDUCATION LAW, ARTICLE 145, FOR ANY PERSON, UNLESS UNDER THE DIRECTION OF A NEW YORK STATE LICENSED PROFESSIONAL ENGINEER, TO ALTER AN ITEM ON THIS DOCUMENT IN ANY WAY.

SYM	DESCRIPTION	DATE	APPR

NAVFAC

STATE OF NEW YORK · STEVE ESTEBAN RAMIREZ · 099095 · LICENSED PROFESSIONAL ENGINEER · 4/22/20

TETRA TECH
www.tetratech.com
4400 CORPORATION LANE, SUITE 350
VIRGINIA BEACH, VA 23462
PHONE: (757) 493-3200 FAX: (757) 491-4160
AE INFO

APPROVED
FOR COMMANDER NAVFAC
ACTIVITY
As per document from Nicole Coward, NAVFAC MIDLANT PLLIEV3
SATISFACTORY TO DATE 3/24/2026
DES TS DRW TS CHK DB
PM/DM
BRANCH MANAGER
CHIEF ENG/ARCH
FIRE PROTECTION

DEPARTMENT OF THE NAVY
NAVAL FACILITIES ENGINEERING SYSTEMS COMMAND ~ MID-ATLANTIC
NAVAL INDUSTRIAL RESERVE ORDNANCE PLANT
NAVAL WEAPONS INDUSTRIAL RESERVE PLANT
BETHPAGE, NEW YORK
PHASE III - GROUNDWATER TREATMENT PLANT
PLUMBING ABBREVIATIONS, LEGEND, & NOTES

SCALE AS NOTED
EPROJECT NO
CONSTR. CONTR. NO N62472-99-D-0002
NAVFAC DRAWING NO
SHEET OF
P-001

DRAWFORM REVISION: 23 AUGUST 2023

4/22/2026 11:43:15 AM P-001
Autodesk Docs://TO3/0600-W024 Navy_Bethpage NY-Phase III IWP-11/2000005_Phase III_GWTP_v2023.rvt

NOTIFICATION: THIS PAGE CONTAINS SENSITIVE BUT UNCLASSIFIED INFORMATION WHICH IS PROTECTED BY THE FREEDOM OF INFORMATION ACT

EXEMPTION 3. (5 USC 552(b)(3))

Information exempted by other statutes

10 USC Section 130(e) Treatment of Certain Critical Infrastructure Security Information

Pages - 5

TO REQUEST A COPY OF THE DOCUMENT PLEASE CONTACT

Department of the Navy
Freedom of Information Act Office

http://www.secnav.navy.mil/foia/Pages/default.aspx

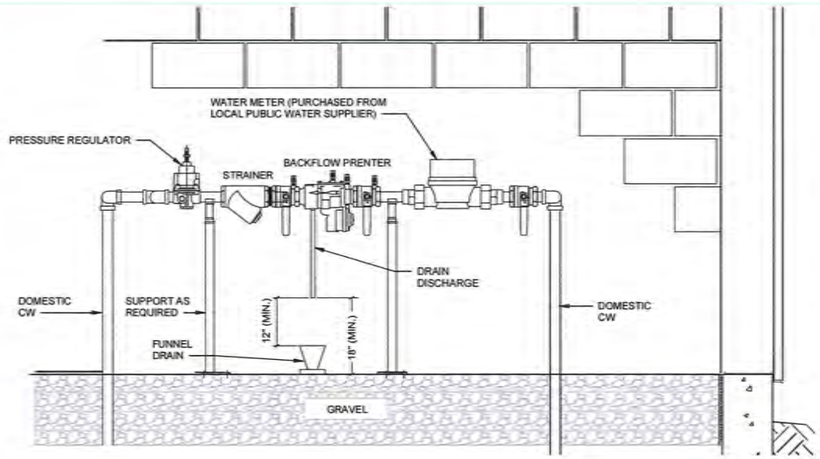

1 P-501 DOMESTIC WATER SERVICE ENTRANCE DETAIL
SCALE: N.T.S.

BACKFLOW PREVENTION NOTES:

1. INSTALLATIONS SHALL BE IN ACCORDANCE WITH ALL APPLICABLE NASSAU COUNTY DEPARTMENT OF HEALTH SERVICES, NEW YORK STATE HEALTH DEPARTMENT REQUIREMENTS, AND LOCAL PLUMBING CODES.
2. PIPING TO BE UNBRANCHED AND UNRESTRICTED FROM THE SUPPLY MAIN TO DEVICE, EXCEPT FOR METER. ALL CONNECTIONS ON THE DOMESTIC WATER SERVICE SHALL BE DOWNSTREAM FROM THE BACKFLOW PREVENTION DEVICE. BYPASSING OF A BACKFLOW PREVENTION DEVICE IS A VIOLATION OF NEW YORK STATE HEALTH DEPARTMENT RULES AND REGULATIONS.
3. DEVICES MUST BE TESTED WITHIN 30 DAYS AFTER INSTALLATION AND AT LEAST ANNUALLY BY A NYSHD VERIFIED BACKFLOW PREVENTION DEVICE TESTER. COPIES OF THE TEST REPORTS SHALL BE PROVIDED TO LOCAL PUBLIC WATER DISTRICT WATER DISTRICT AND THE NASSAU COUNTY DEPARTMENT OF HEALTH
4. PROVIDE 30-INCH MINIMUM CLEARANCE FROM ANY OBSTRUCTIONS IN ORDER TO FACILITATE TESTING AND MAINTENANCE. PROVIDE 8 INCH MINIMUM CLEARANCE FROM ANY OBSTRUCTION FROM SIDES AND REAR OF DEVICE. PROVIDE 12 INCH MINIMUM CLEARANCE FROM ANY OBSTRUCTION FROM TOP OF DEVICE.
5. THE FIRE MAIN BACKFLOW PREVENTER OS&Y VALVES SHALL BE MONITORED BY THE FIRE ALARM SYSTEM.
6. TEST COCKS SHALL NOT FACE ANY WALL AND SHALL BE POSITIONED TO FACILITATE TESTING.
7. PROVIDE 12 INCH MINIMUM CLEARANCE FROM TOP OF DRAIN FUNNEL TO RPZ DRAIN DISCHARGE AND 18 INCH MINIMUM CLEARANCE FROM RPZ DRAIN DISCHARGE TO FINISHED FLOOR. DRAINAGE MUST BE POSITIVE WITH THE EFFLUENT VISIBLE.
8. ALL INTERNAL SERVICE/ANALYSIS PIPING TO BE COPPER. NO LEAD OR SOLDER SHALL BE USED.
9. THE BACKFLOW PREVENTION DEVICE SHALL BE INSTALLED AS SHOWN ON THIS DRAWING. APPROVAL FROM NAVY IS REQUIRED PRIOR TO MAKING ANY MODIFICATIONS BECAUSE OF FIELD CONDITIONS AND/OR JOB REQUIREMENTS. NO MODIFICATION TO THE ORDER OF COMPONENTS OR MINIMUM CLEARANCES SHOWN ON THIS DRAWING WILL BE PERMITTED.
10. THE BACKFLOW PREVENTION DEVICE MUST BE INSTALLED BY A PLUMBER WHO IS LICENSED BY THE TOWN.
11. SHUTOFF VALVES ON DEVICES MUST BE RESILIENT SEAT TYPE.
12. NOTIFICATION TO THE LOCAL WATER SUPPLIER: THE PLUMBER SHALL NOTIFY THE SUPERINTENDENT AT LEAST 24 HOURS PRIOR TO THE COMMENCEMENT OF ANY WORK.

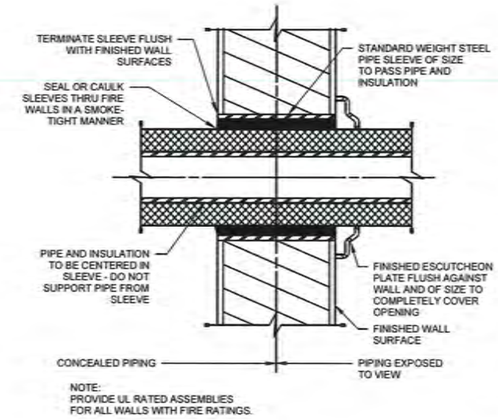

NOTE:
PROVIDE UL RATED ASSEMBLIES FOR ALL WALLS WITH FIRE RATINGS.

2 P-501 PIPE SLEEVES THRU INTERIOR WALLS
SCALE: N.T.S.

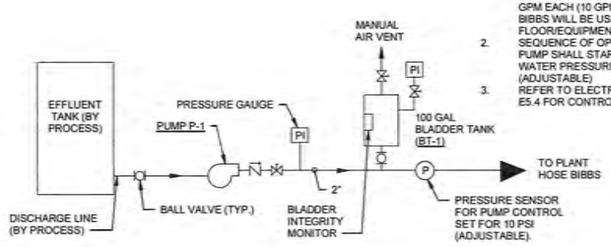

NOTES:
1. SYSTEM DESIGNED FOR SERVING 2 HOSE BIBBS SIMULTANEOUSLY AT 5 GPM EACH (10 GPM TOTAL) . HOSE BIBBS WILL BE USED FOR FLOOR/EQUIPMENT WASHDOWN.
2. SEQUENCE OF OPERATION: PUMP SHALL START UPON A DROP IN WATER PRESSURE BELOW 10 PSI (ADJUSTABLE)
3. REFER TO ELECTRICAL DRAWING E5.4 FOR CONTROLLER.

3 P-501 NON-POTABLE WATER SUPPLY FLOW DIAGRAM
SCALE: SCALE: N.T.S.

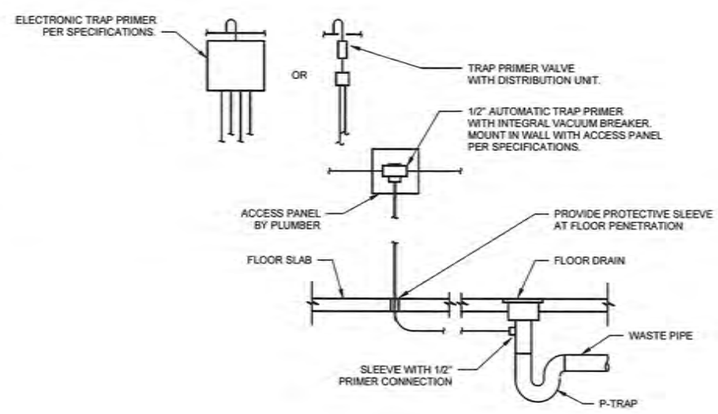

4 P-501 FLOOR DRAIN TRAP PRIMER DETAIL
SCALE: N.T.S.

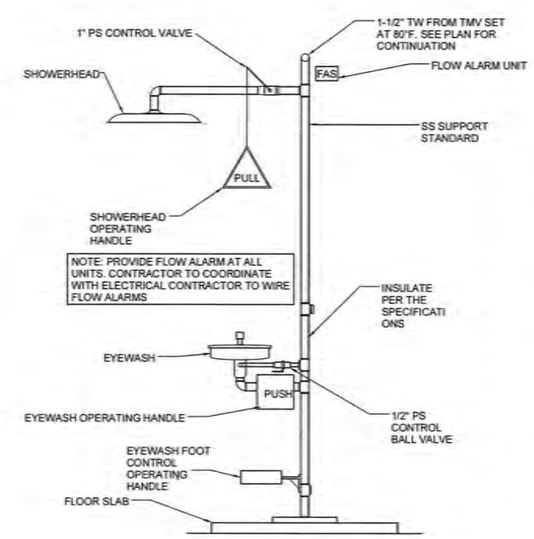

5 P-501 EMERGENCY SHOWER AND EYEWASH DETAIL
SCALE: N.T.S.

ISSUED FOR BID - FEBRUARY 2026

THIS DRAWING PRODUCED ON REVIT
DO NOT REVISE MANUALLY

"THIS DOCUMENT IS THE PROPERTY OF NAVAL FACILITIES ENGINEERING COMMAND, PREPARED BY TETRA TECH ENGINEERING CORPORATION PC, AND IS PROVIDED UPON THE CONDITION THAT IT WILL NOT BE REPRODUCED, COPIED, OR ISSUED TO A THIRD PARTY, AND WILL BE USED SOLELY FOR THE ORIGINAL INTENDED PURPOSE AND SOLELY FOR THE EXECUTION OR REVIEW OF THE ENGINEERING CONSTRUCTION OF THE PROJECT".

IT IS A VIOLATION OF THE NEW YORK STATE EDUCATION LAW, ARTICLE 145, FOR ANY PERSON, UNLESS UNDER THE DIRECTION OF A NEW YORK STATE LICENSED PROFESSIONAL ENGINEER, TO ALTER AN ITEM ON THIS DOCUMENT IN ANY WAY.

SYM	DESCRIPTION	DATE	APPR

NAVFAC

STATE OF NEW YORK · TIMOTHY STEVEN RAMBERT · 099098 · LICENSED PROFESSIONAL ENGINEER
4/22/20

TETRA TECH
www.tetratech.com
4400 CORPORATION LANE, SUITE 300
VIRGINIA BEACH, VA 23462
PHONE (757) 490-3700 FAX (757) 490-4148
HE FIRM

APPROVED:
FOR COMMANDER NAVFAC
ACTIVITY
As per document from Nicole Coward, NAVFAC MIDLANT PLUEV3
SATISFACTORY TO DATE 3/24/2026
DES TS DRW TS CHK DB
PEDM
BRANCH MANAGER
CHIEF ENGINEER
FIRE PROTECTION

DEPARTMENT OF THE NAVY
NAVAL FACILITIES ENGINEERING SYSTEMS COMMAND – MID-ATLANTIC
NAVAL INDUSTRIAL RESERVE ORDNANCE PLANT
NAVAL WEAPONS INDUSTRIAL RESERVE PLANT
BETHPAGE, NEW YORK
PHASE III - GROUNDWATER TREATMENT PLANT
DETAILS

SCALE AS NOTED
EFPROJECT NO
CONSTR. CONTR. NO MD4721-R-0-1022
NAVFAC DRAWING NO.
SHEET OF
P-501

DRAWING REVISION: 23 AUGUST 2023

P-501
4/22/2026 11:43:23 AM
Autodesk Docs://T12008005/WE24 Navy Bethpage NY Phase III IRP-112008005_Phase III_GWTP_v2023.rvt

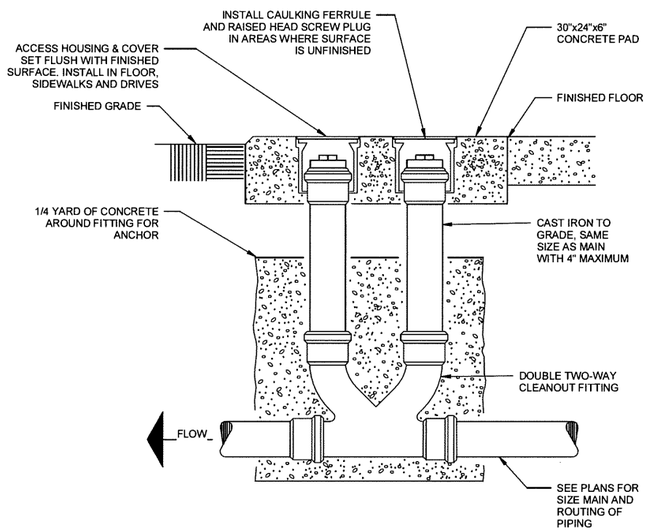

1 P-502 DOUBLE YARD CLEANOUT DETAIL
SCALE: N.T.S.

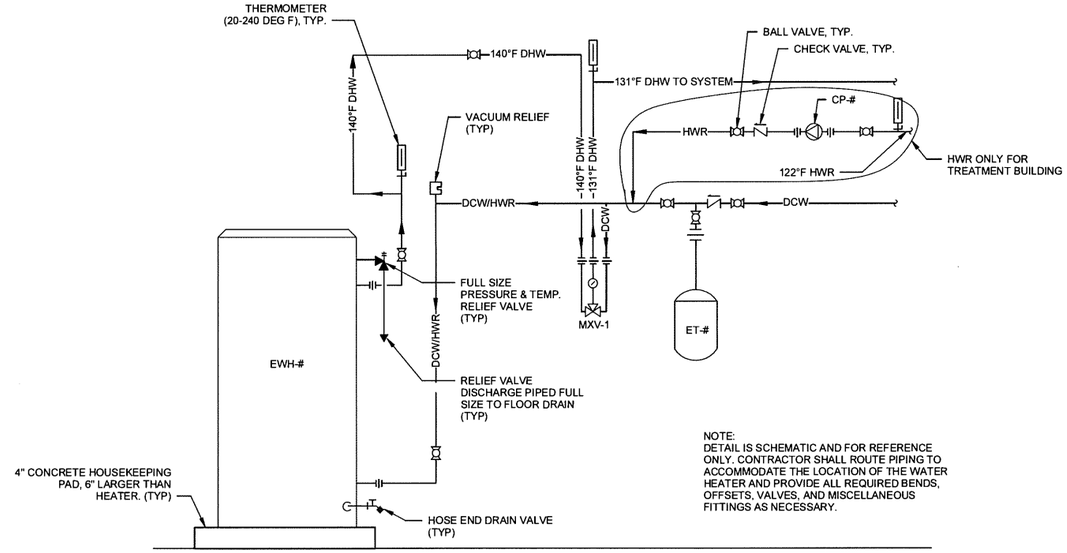

3 P-502 ELECTRIC WATER HEATER DETAIL
SCALE: N.T.S.

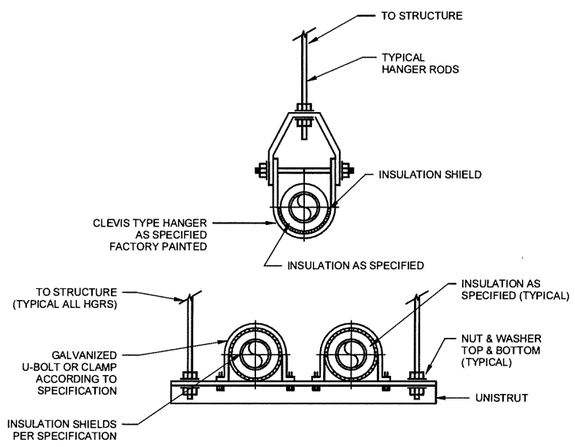

2 P-502 PIPE HANGERS - CLEVIS/TRAPEZE
SCALE: N.T.S.

PIPE HANGER SUPPORT AND SPACING

PIPE SIZE (INCHES)	ROD SIZE (INCHES)	STEEL PIPE (FEET)	COPPER PIPE (FEET)
1" AND SMALLER	3/8"	8'	6'
1-1/4" TO 1-1/2"	3/8"	10'	8'
2"	3/8"	10'	8'
2-1/2" TO 3-1/2"	1/2"	12'	12'
4" TO 5"	5/8"	16'	14'
6"	3/4"	16'	16'
8" TO 12"	7/8"	20'	20'
14" TO 18"	1"	20'	20'
20" AND OVER	1-1/4"	20'	20'

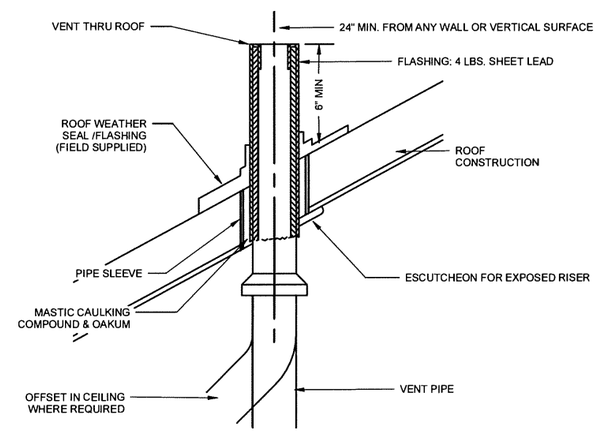

4 P-502 VENT THRU SLOPED ROOF DETAIL
SCALE: N.T.S.

ISSUED FOR BID - FEBRUARY 2026

THIS DRAWING PRODUCED ON REVIT
DO NOT REVISE MANUALLY

"THIS DOCUMENT IS THE PROPERTY OF NAVAL FACILITIES ENGINEERING COMMAND, PREPARED BY TETRA TECH ENGINEERING CORPORATION PC, AND IS PROVIDED UPON THE CONDITION THAT IT WILL NOT BE REPRODUCED, COPIED, OR ISSUED TO A THIRD PARTY, AND WILL BE USED SOLELY FOR THE ORIGINAL INTENDED PURPOSE AND SOLELY FOR THE EXECUTION OR REVIEW OF THE ENGINEERING CONSTRUCTION OF THE PROJECT".

IT IS A VIOLATION OF THE NEW YORK STATE EDUCATION LAW, ARTICLE 145, FOR ANY PERSON, UNLESS UNDER THE DIRECTION OF A NEW YORK STATE LICENSED PROFESSIONAL ENGINEER, TO ALTER AN ITEM ON THIS DOCUMENT IN ANY WAY.

SYM	DESCRIPTION	DATE	APPR

NAVFAC

STATE OF NEW YORK · JOSE ESTEBAN RAMIREZ · 099098 · LICENSED PROFESSIONAL ENGINEER
4/22/20

TETRA TECH
www.tetratech.com
4433 CORPORATION LANE, SUITE 300
VIRGINIA BEACH, VA 23462
PHONE: (757) 461-3768 FAX: (757) 461-4148
AE INFO

APPROVED:
FOR COMMANDER NAVFAC

ACTIVITY
As per document from Nicole Coward, NAVFAC MIDLANT PLL/EV3
SATISFACTORY TO DATE 3/24/2026
DES TS | DRW TS | CHK DB
PM/DM
BRANCH MANAGER
CNEF ENG/ARCH
FIRE PROTECTION

DEPARTMENT OF THE NAVY
NAVAL FACILITIES ENGINEERING COMMAND
NAVAL FACILITIES ENGINEERING SYSTEMS COMMAND ~ MID-ATLANTIC
NAVAL INDUSTRIAL RESERVE ORDNANCE PLANT
NAVAL WEAPONS INDUSTRIAL RESERVE PLANT
BETHPAGE, NEW YORK
PHASE III - GROUNDWATER TREATMENT PLANT
DETAILS

SCALE AS NOTED
EPROJECT NO
CONSTR CONTR NO N62472-99-D-0202
NAVFAC DRAWING NO
SHEET OF
P-502

DRAWFORM REVISION: 25 AUGUST 2023

4/22/2026 11:43:24 AM P-502
Autodesk Docs://112G8605-WE24 Navy- Bethpage NY-Phase III /MP-112G8605_Phase III_GWTP_v2023.rvt

PLUMBING FIXTURE SCHEDULE

MARK	DESCRIPTION	ADA	CONNECTION SIZE (IN)				MANUFACTURER	MODEL	NOTES
			DCW	HW	WASTE	VENT			
DYCO	DOUBLE YARD CLEANOUT		-	-	4"	-	ZURN	Z1400	EXTRA HEAVY DUTY ADJUSTABLE DOUBLE CLEANOUT WITH TAPERED THREAD PLUG AND ROUND SCORIATED CAST IRON SECURED TOP.
ES-1	EMERGENCY EYE WASH AND SHOWER COMBO		1-1/4"	1-1/4"	-	-	GUARDIAN	G19505BC	PROVIDE ALARM WITH FLOW SWITCH WITH CONNECTION TO PLC. PROVIDE MIXING VALVE SET @ 80 DEG. F.
FCO	FLOOR CLEANOUT		-	-	-	-	ZURN	Z1400	EXTRA HEAVY DUTY ADJUSTABLE FLOOR CLEANOUT WITH TAPERED THREAD PLUG AND ROUND SCORIATED CAST IRON SECURED TOP.
FD-1	FLOOR DRAIN		-	-	3"	1-1/2"	ZURN	Z1468	WITH TRAP SEAL
HB	HOSE BIBB		3/4"	-	-	-	ZURN	Z1341	BRASS WITH INTEGRAL VACUUM BREAKER
LA-1	WALL MOUNTED LAVATORY (0.5 GPM)	X	1/2"	1/2"	1-1/2"	1-1/2"	ZURN	Z5350	INCLUDE SPEAKMAN FAUCET SC-4072-E-LD AND MIXING VALVE FOR 110° F MAX
MB-1	MOP BASIN		3/4"	3/4"	3"	1-1/2"	FIAT	TSBC1610	PROVIDE UTILITY SINK FAUCET (SPEAKMAN MODEL: SC-5811)
RPBFP	REDUCED PRESSURE BACKFLOW PREVENTER		2"	-	-	-	ZURN	375 XL	-
SH-1	SHOWER	X	1/2"	1/2"	2"	1-1/2"	BARRIER FREE	4LRS3636B5B	MOLDED FOUR PIECE FIBERGLASS SHOWER MODULE. PROVIDE FAUCET: SPEAKMAN SM-1090-ADA-P
SK-1	BREAKROOM SINK		1/2"	1/2"	1-1/2"	1-1/2"	ELKAY	DLR191910PD	STAINLESS STEEL SINGLE BOWL DROP-IN SINK. CENTER DRAIN PLACEMENT. PROVIDE SINGLE HOLE FAUCET WITH PULL-OUT SPRAY AND LEVER HANDLE ELKAY LKGT1041.
TP-1	TRAP PRIMER		1/2"	-	-	-	ZURN	Z-1022-XL	ALL BRONZE WITH INTEGRAL BREAKER, NON-LIMITING INTERNAL OPERATING PISTON.
TP-2	TRAP PRIMER		1/2"	-	-	-	ZURN	Z-1022-XL-DU2	ALL BRONZE WITH INTEGRAL BREAKER, NON-LIMITING INTERNAL OPERATING PISTON. 2 OUTLET DISTRIBUTION UNIT.
US-1	ONE-COMPARTMENT UTILITY SINK		1/2"	1/2"	1-1/2"	1-1/2"	EAGLE GROUP	2136-1-16/3	PROVIDE 8" CENTER SPLASH-MOUTED STANDARD FAUCET AND BACKSPLASH MOUNT EYEWASH
US-2	ONE-COMPARTMENT UTILITY SINK		1/2"	1/2"	1-1/2"	1-1/2"	EAGLE GROUP	2136-1-16/3	PROVIDE 8" CENTER SPLASH-MOUTED STANDARD FAUCET AND BACKSPLASH MOUNT EYEWASH
WC-1	WATER CLOSET, WALL MOUNTED (1.28 GPF)	X	1"	-	4"	2"	AMERICAN STANDARD	3351.101	INCLUDE 1.28 GPF MANUAL FLUSH VALVE (AMERICAN STANDARD, MODEL 6047121.002) AND SEAT
WCO	WALL CLEANOUT		-	-	4"	-	ZURN	Z1468	ROUND STAINLESS STEEL WALL ACCESS COVER WITH SECURING SCREW AND BRONZE RAISED HEAD PLUG.

ELECTRIC WATER HEATER SCHEDULE

TAG	MIN STORAGE CAPACITY (GAL)	RECOVERY (GPH)	INPUT (kW)	DISCHARGE TEMP. (F)	TEMP. RISE (F)	VOLTS / PH / HZ	AMPS	WEIGHT (LBS)	MANUFACTURER	MODEL	NOTES
EWH-1	50	123	30	140	100	480/3/60	36.1	390	A.O. SMITH	DRE-52-30	
EWH-2	6	6	1.5	140	100	208/1/60	-	35	A.O. SMITH	DEL-6	

PUMP SCHEDULE

MARK	MANUFACTURER	MODEL	SERVING	TYPE	FLOW (GPM)	HEAD (FT WG)	RPM	ELECTRICAL			NOTES
								HP	VOLTS	PH	
CP-1	TACO	2445	HOT WATER RETURN	CENTRIFUGAL INLINE	5	13	3450	1/3	115	1	STAINLESS STEEL HOUSING AND BMS CONTROL
P-1	BELL & GOSSETT	3SV4NC4C60N	HOSE BIBBS (NON-POTABLE WATER)	VERTICAL MULTI-STAGE	20	50	3500	1	460	3	REFER TO PROCESS FOR SPECIFICATIONS.

EXPANSION TANK SCHEDULE

MARK	SERVICE	TANK VOLUME (GALLONS)	MAXIMUM PRESSURE (PSIG)	LOCATION	MANUFACTURER (OR APPROVED EQUAL)	MODEL (OR APPROVED EQUAL)	NOTES
BT-1	NON-POTABLE WATER	106	125	MECH ROOM 111	WESSELS CO.	FXA-400	ASME STAMPED, BLADDER TYPE, 40 PSIG PRECHARGED
ET-1	DOMESTIC HOT WATER	6.4	150	MECH ROOM 111	AMTROL	ST-12-C	ASME-STAMPED, DIAPHRAGM TYPE, 55 PSIG PRECHARGED
ET-2	DOMESTIC HOT WATER	2.0	150	ELEC/MECH 108	AMTROL	ST-5-C	ASME-STAMPED, DIAPHRAGM TYPE, 55 PSIG PRECHARGED

ISSUED FOR BID - FEBRUARY 2026

THIS DRAWING PRODUCED ON REVIT
DO NOT REVISE MANUALLY

"THIS DOCUMENT IS THE PROPERTY OF NAVAL FACILITIES ENGINEERING COMMAND, PREPARED BY TETRA TECH ENGINEERING CORPORATION PC, AND IS PROVIDED UPON THE CONDITION THAT IT WILL NOT BE REPRODUCED, COPIED, OR ISSUED TO A THIRD PARTY, AND WILL BE USED SOLELY FOR THE ORIGINAL INTENDED PURPOSE AND SOLELY FOR THE EXECUTION OR REVIEW OF THE ENGINEERING CONSTRUCTION OF THE PROJECT".

IT IS A VIOLATION OF THE NEW YORK STATE EDUCATION LAW, ARTICLE 145, FOR ANY PERSON, UNLESS UNDER THE DIRECTION OF A NEW YORK STATE LICENSED PROFESSIONAL ENGINEER, TO ALTER AN ITEM ON THIS DOCUMENT IN ANY WAY.

SYM	DESCRIPTION	DATE	APPR

NAVFAC

STATE OF NEW YORK · JOSE ESTEBAN RAMIREZ · 099095 · LICENSED PROFESSIONAL ENGINEER
4/22/20

TETRA TECH
4430 CORPORATION LANE, SUITE 300
VIRGINIA BEACH, VA 23462
PHONE: (757) 490-3700 FAX: (757) 490-4048

APPROVED
FOR COMMANDER NAVFAC

ACTIVITY
As per document from Nicole Coward, NAVFAC MIDLANT PLL/EV3.
SATISFACTORY TO DATE 3/24/2026

DES TS | DRN TS | CHK DB

PM/DM
BRANCH MANAGER
CHIEF ENGINEER
FIRE PROTECTION

DEPARTMENT OF THE NAVY
NAVAL FACILITIES ENGINEERING COMMAND
NAVAL FACILITIES ENGINEERING SYSTEMS COMMAND – MID-ATLANTIC
NAVAL INDUSTRIAL RESERVE ORDNANCE PLANT
NAVAL WEAPONS INDUSTRIAL RESERVE PLANT
BETHPAGE, NEW YORK
PHASE III - GROUNDWATER TREATMENT PLANT
PLUMBING SCHEDULES

SCALE: AS NOTED
EFR/PROJECT NO.
CONSTR. CONTR. NO. N62472-93-D-0002
NAVFAC DRAWING NO.
SHEET OF
P-601

DRAWFORM REVISION 28 AUGUST 2020

4/22/2026 11:43:24 AM P-601
Autodesk Docs://1120/00005-VE24 Navy- Bethpage NY-Phase III MP-1120/00005_Phase III_GWTP_v0023.rvt

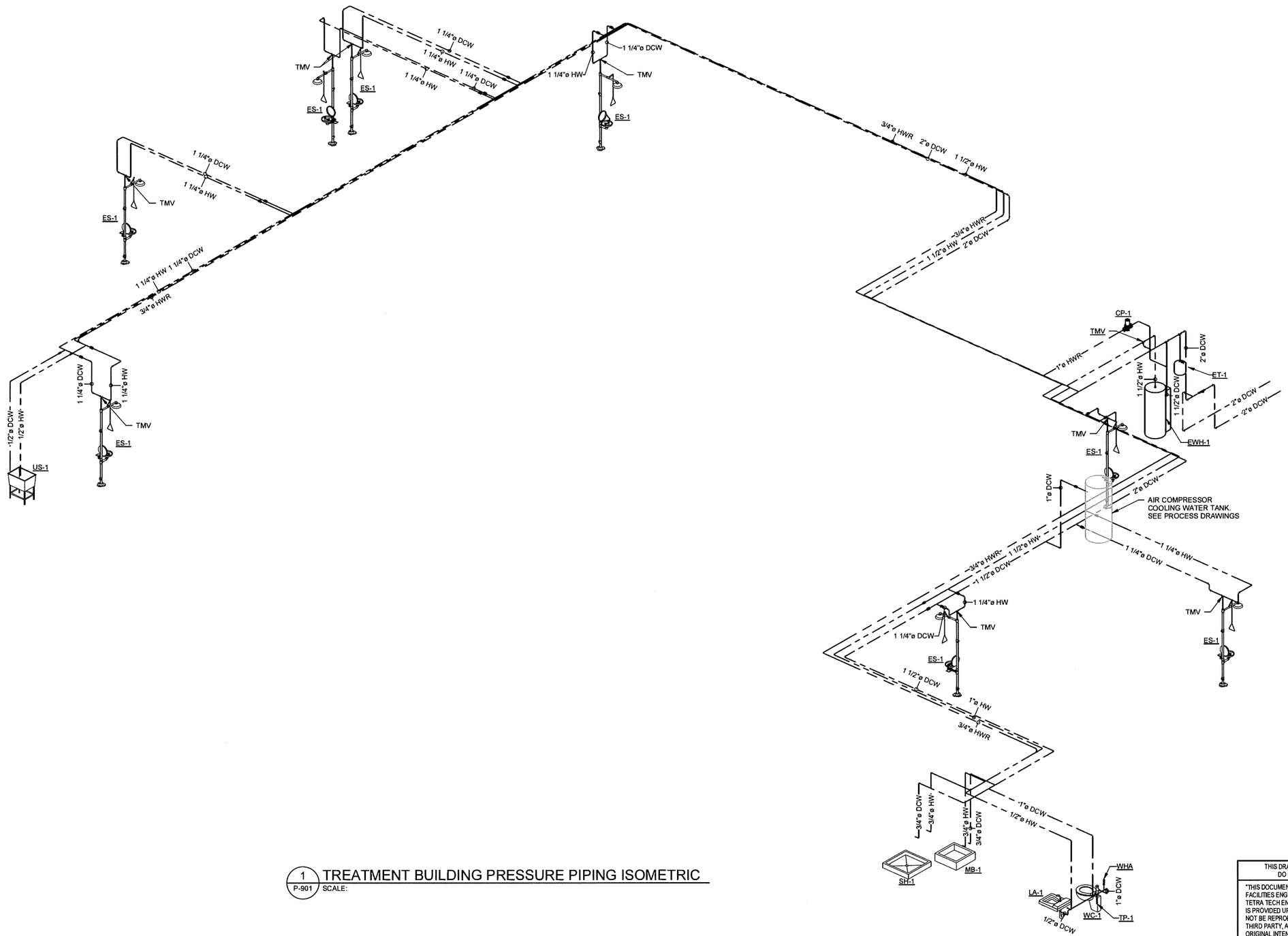

1 / P-901 TREATMENT BUILDING PRESSURE PIPING ISOMETRIC
SCALE:

ISSUED FOR BID - FEBRUARY 2026

THIS DRAWING PRODUCED ON REVIT
DO NOT REVISE MANUALLY

"THIS DOCUMENT IS THE PROPERTY OF NAVAL FACILITIES ENGINEERING COMMAND, PREPARED BY TETRA TECH ENGINEERING CORPORATION PC, AND IS PROVIDED UPON THE CONDITION THAT IT WILL NOT BE REPRODUCED, COPIED, OR ISSUED TO A THIRD PARTY, AND WILL BE USED SOLELY FOR THE ORIGINAL INTENDED PURPOSE AND SOLELY FOR THE EXECUTION OR REVIEW OF THE ENGINEERING CONSTRUCTION OF THE PROJECT".

IT IS A VIOLATION OF THE NEW YORK STATE EDUCATION LAW, ARTICLE 145, FOR ANY PERSON, UNLESS UNDER THE DIRECTION OF A NEW YORK STATE LICENSED PROFESSIONAL ENGINEER, TO ALTER AN ITEM ON THIS DOCUMENT IN ANY WAY.

SYM	DESCRIPTION	DATE	APPR

NAVFAC

STATE OF NEW YORK
JOSE ESTEBAN RAMIREZ
099098
LICENSED PROFESSIONAL ENGINEER
4/22/20

TETRA TECH
www.tetratech.com
4433 CORPORATION LANE, SUITE 300
VIRGINIA BEACH, VA 23462
PHONE (757) 461-3768 FAX (757) 461-4148

APPROVED
FOR COMMANDER NAVFAC

ACTIVITY
As per document from Nicole Coward, NAVFAC MIDLANT PLI/EV3
SATISFACTORY TO DATE 3/24/2026
DES TS DRW TS CHK DB
PM/DM
BRANCH MANAGER
CHIEF ENG/ARCH
FIRE PROTECTION

DEPARTMENT OF THE NAVY
NAVAL FACILITIES ENGINEERING SYSTEMS COMMAND ~ MID-ATLANTIC
NAVAL INDUSTRIAL RESERVE ORDNANCE PLANT
NAVAL WEAPONS INDUSTRIAL RESERVE PLANT
BETHPAGE, NEW YORK

PHASE III - GROUNDWATER TREATMENT PLANT

ISOMETRICS

SCALE AS NOTED
EPROJECT NO :
CONSTR. CONTR. NO N62472-89-D-0022
NAVFAC DRAWING NO.
SHEET OF
P-901

DRAWFORM REVISION: 25 AUGUST 2020

4/22/2026 11:43:25 AM P-901
Autodesk Docs://TT/2026805-WEZ4 Navy- Bethpage NY-Phase III IM/P-1120380805_PhaseIII_GWTP_v2023.rvt

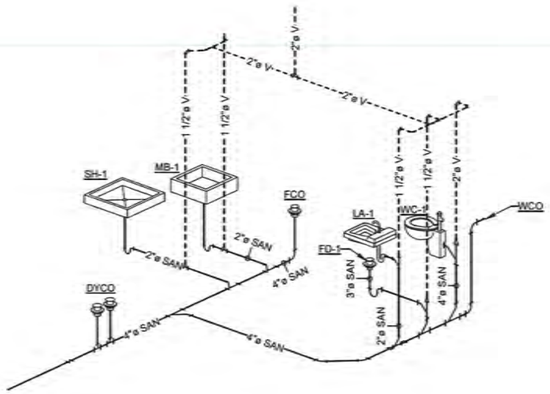

1 P-902 TREATMENT BUILDING WASTE & VENT ISOMETRIC
SCALE:

ISSUED FOR BID - FEBRUARY 2026

THIS DRAWING PRODUCED ON REVIT
DO NOT REVISE MANUALLY

"THIS DOCUMENT IS THE PROPERTY OF NAVAL FACILITIES ENGINEERING COMMAND, PREPARED BY TETRA TECH ENGINEERING CORPORATION PC, AND IS PROVIDED UPON THE CONDITION THAT IT WILL NOT BE REPRODUCED, COPIED, OR ISSUED TO A THIRD PARTY, AND WILL BE USED SOLELY FOR THE ORIGINAL INTENDED PURPOSE AND SOLELY FOR THE EXECUTION OR REVIEW OF THE ENGINEERING CONSTRUCTION OF THE PROJECT".

IT IS A VIOLATION OF THE NEW YORK STATE EDUCATION LAW, ARTICLE 145, FOR ANY PERSON, UNLESS UNDER THE DIRECTION OF A NEW YORK STATE LICENSED PROFESSIONAL ENGINEER, TO ALTER AN ITEM ON THIS DOCUMENT IN ANY WAY.

SYM	DESCRIPTION	DATE	APPR

NAVFAC

STATE OF NEW YORK
LUIS ESTEBAN RAMIREZ
099098
LICENSED PROFESSIONAL ENGINEER
4/22/20

TETRA TECH
www.tetratech.com
4423 CORPORATION LANE, SUITE 300
VIRGINIA BEACH, VA 23462
PHONE: (757) 490-3300 FAX: (757) 490-4140
AE EMAIL

APPROVED
FOR COMMANDER NAVFAC

ACTIVITY
As per document from Nicole Coward, NAVFAC MIDLANT PLL/EV3
SATISFACTORY TO DATE 3/24/2026
DES TS | DRW TS | CHK DB
PRDM
BRANCH MANAGER
CHIEF ENGARCH
FIRE PROTECTION

DEPARTMENT OF THE NAVY
NAVAL FACILITIES ENGINEERING COMMAND
NAVAL FACILITIES ENGINEERING SYSTEMS COMMAND – MID-ATLANTIC
NAVAL INDUSTRIAL RESERVE ORDNANCE PLANT
NAVAL WEAPONS INDUSTRIAL RESERVE PLANT
BETHPAGE, NEW YORK
PHASE III - GROUNDWATER TREATMENT PLANT
ISOMETRICS

SCALE AS NOTED
EFD/SUBECT NO.
CONSTR. CONTR. NO. N62472-09-D-0002
NAVFAC DRAWING NO.
SHEET OF
P-902

DRAWING FORMAT REVISION: 23 AUGUST 2023

4/22/2026 11:43:26 AM P-902
Autodesk Docs://1120/06005 WE24 Navy Bethpage NY-Phase III IMP-1120/06005_Phase III_GWTP_v2023.rvt

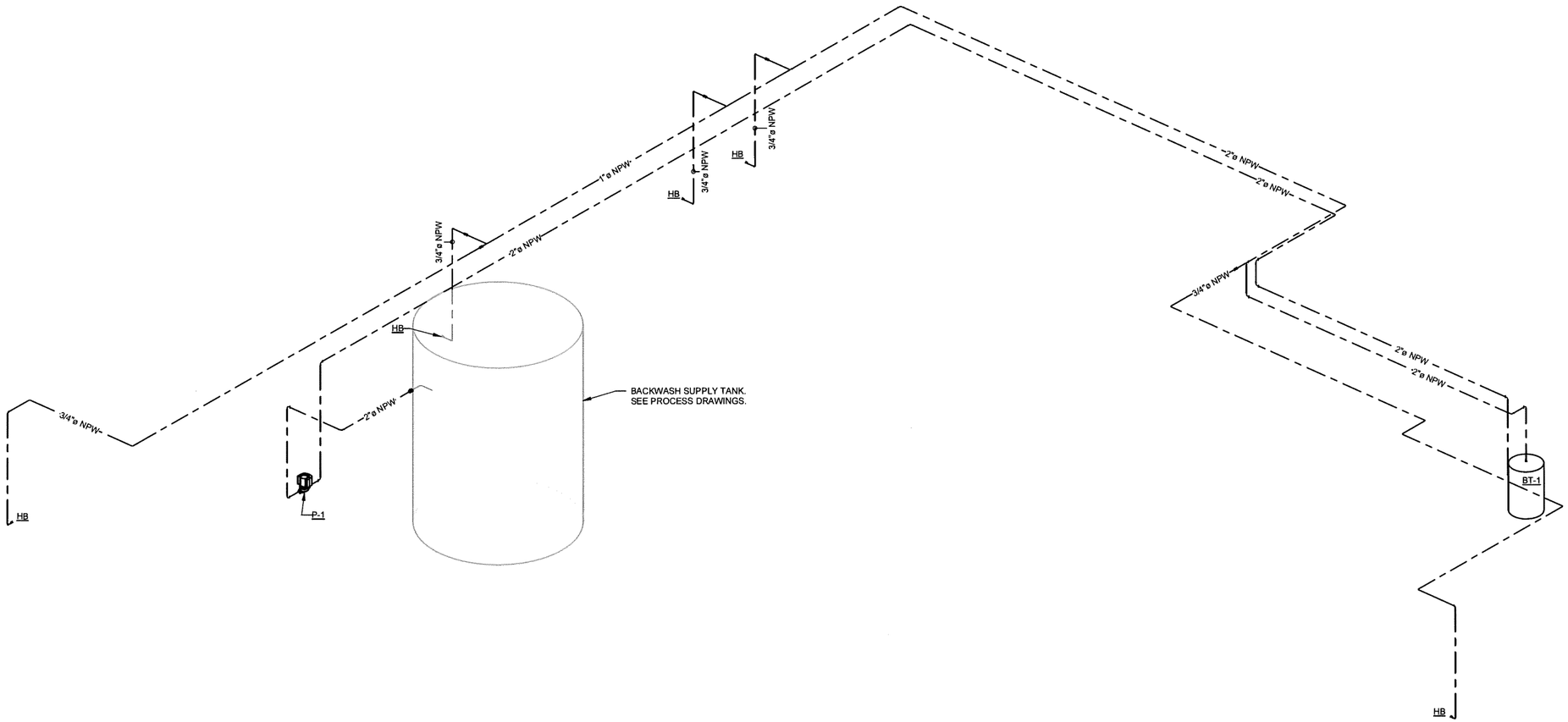

1 / P-903 TREATMENT BUILDING NON-POTABLE WATER ISOMETRIC

SCALE:

ISSUED FOR BID - FEBRUARY 2026

THIS DRAWING PRODUCED ON REVIT
DO NOT REVISE MANUALLY

"THIS DOCUMENT IS THE PROPERTY OF NAVAL FACILITIES ENGINEERING COMMAND, PREPARED BY TETRA TECH ENGINEERING CORPORATION PC, AND IS PROVIDED UPON THE CONDITION THAT IT WILL NOT BE REPRODUCED, COPIED, OR ISSUED TO A THIRD PARTY, AND WILL BE USED SOLELY FOR THE ORIGINAL INTENDED PURPOSE AND SOLELY FOR THE EXECUTION OR REVIEW OF THE ENGINEERING CONSTRUCTION OF THE PROJECT".

IT IS A VIOLATION OF THE NEW YORK STATE EDUCATION LAW, ARTICLE 145, FOR ANY PERSON, UNLESS UNDER THE DIRECTION OF A NEW YORK STATE LICENSED PROFESSIONAL ENGINEER, TO ALTER AN ITEM ON THIS DOCUMENT IN ANY WAY.

SYM	DESCRIPTION	DATE	APPR

NAVFAC

STATE OF NEW YORK
WILLIAM ESTEBAN RAMIREZ
099098
LICENSED PROFESSIONAL ENGINEER
4/22/20

TETRA TECH
www.tetratech.com
4433 CORPORATION LANE, SUITE 300
VIRGINIA BEACH, VA 23462
PHONE: (757) 461-3768 FAX: (757) 461-4148
AE INFO

APPROVED
FOR COMMANDER NAVFAC

ACTIVITY
As per document from Nicole Cowand, NAVFAC MIDLANT PLL/EV3

SATISFACTORY TO DATE 3/24/2026

DES TS | DRW TS | CHK DB

PM/DM
BRANCH MANAGER
CHIEF ENG/ARCH
FIRE PROTECTION

DEPARTMENT OF THE NAVY
NAVAL FACILITIES ENGINEERING COMMAND
NAVAL FACILITIES ENGINEERING SYSTEMS COMMAND – MID-ATLANTIC
NAVAL INDUSTRIAL RESERVE ORDNANCE PLANT
NAVAL WEAPONS INDUSTRIAL RESERVE PLANT
BETHPAGE, NEW YORK
PHASE III - GROUNDWATER TREATMENT PLANT
ISOMETRICS

SCALE AS NOTED
EPROJECT NO:
CONSTR. CONTR. NO N62472-09-D-0032
NAVFAC DRAWING NO.
SHEET OF
P-903

DRAWFORM REVISION: 28 AUGUST 2020

4/22/2026 11:43:26 AM P-903
Autodesk Docs://12Q8905-WEZ4 Navy- Bethpage NY-Phase III IMP-112Q8905_PhaseIII_GWTP_v2023.rvt

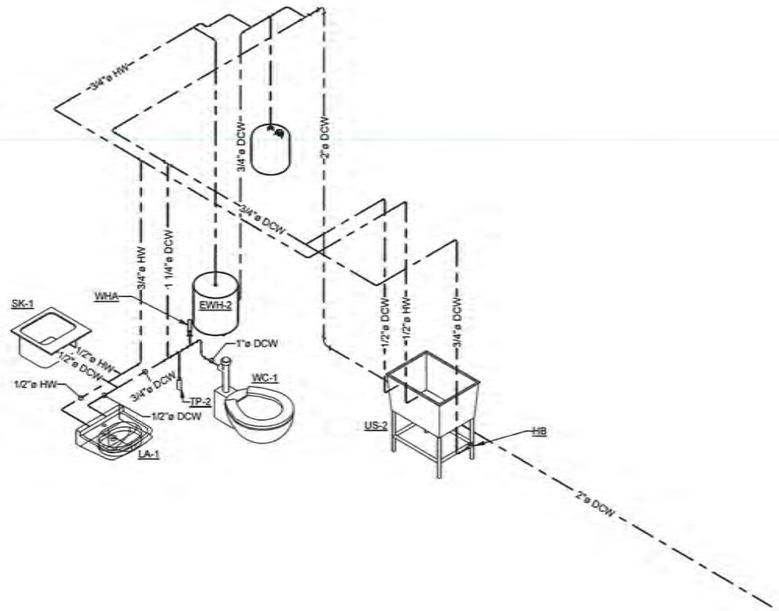

1 P-904 OFFICE BUILDING PRESSURE PIPING ISOMETRIC
SCALE:

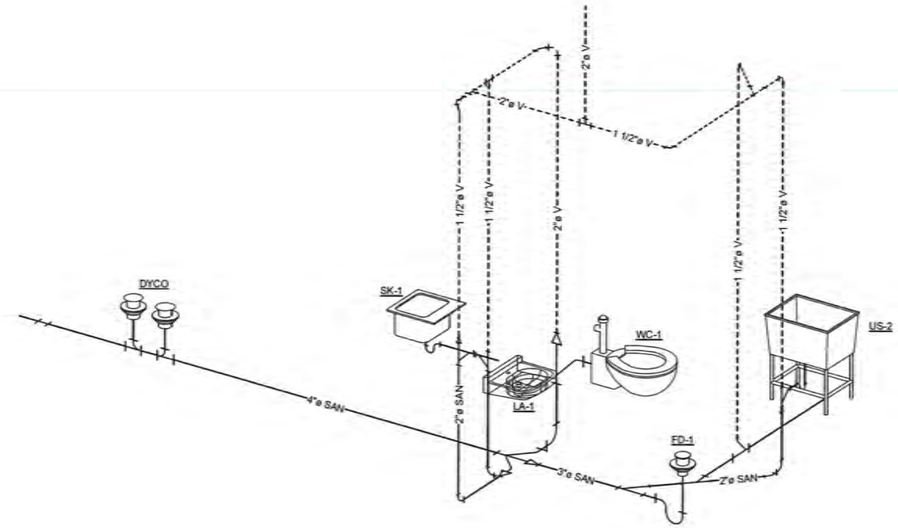

2 P-904 OFFICE BUILDING WASTE & VENT ISOMETRIC
SCALE:

THIS DRAWING PRODUCED ON REVIT
DO NOT REVISE MANUALLY

"THIS DOCUMENT IS THE PROPERTY OF NAVAL FACILITIES ENGINEERING COMMAND, PREPARED BY TETRA TECH ENGINEERING CORPORATION PC, AND IS PROVIDED UPON THE CONDITION THAT IT WILL NOT BE REPRODUCED, COPIED, OR ISSUED TO A THIRD PARTY, AND WILL BE USED SOLELY FOR THE ORIGINAL INTENDED PURPOSE AND SOLELY FOR THE EXECUTION OR REVIEW OF THE ENGINEERING CONSTRUCTION OF THE PROJECT".

IT IS A VIOLATION OF THE NEW YORK STATE EDUCATION LAW, ARTICLE 145, FOR ANY PERSON, UNLESS UNDER THE DIRECTION OF A NEW YORK STATE LICENSED PROFESSIONAL ENGINEER, TO ALTER AN ITEM ON THIS DOCUMENT IN ANY WAY.

ISSUED FOR BID - FEBRUARY 2026

SYM	DESCRIPTION	DATE	APPR

NAVFAC

STATE OF NEW YORK · LUIS ESTEBAN RAMIREZ · 099098 · LICENSED PROFESSIONAL ENGINEER
4/22/20

TETRA TECH
www.tetratech.com
4423 CORPORATION LANE, SUITE 350
VIRGINIA BEACH, VA 23462
PHONE: (757) 461-3783 FAX: (757) 461-4140
VET INFO:

APPROVED
FOR COMMANDER NAVFAC

ACTIVITY
As per document from Nicole Coward, NAVFAC MIDLANT PLLEV3

SATISFACTORY TO DATE 3/24/2026

DES TS DRN TS CHK DB

PRECM
BRANCH MANAGER
CHIEF ENG/ARCH
FIRE PROTECTION

DEPARTMENT OF THE NAVY
NAVAL FACILITIES ENGINEERING SYSTEMS COMMAND ~ MID-ATLANTIC
NAVAL INDUSTRIAL RESERVE ORDNANCE PLANT
NAVAL WEAPONS INDUSTRIAL RESERVE PLANT
BETHPAGE, NEW YORK
PHASE III - GROUNDWATER TREATMENT PLANT
ISOMETRICS

SCALE: AS NOTED
EFIPROJECT NO
CONSTR. CONTR. NO M0473-09-D-0002
NAVFAC DRAWING NO.
SHEET OF
P-904

DRAWING FORM REVISION: 23 AUGUST 2005

4/22/2026 11:43:26 AM P-904
Autodesk Docs://1120/8605/WE24 Navy Bethpage NY Phase III AIP-1120/8605_Phase III_GWTP_v2023.rvt

PRIMARY APPLICABLE CODES

- 2020 BUILDING CODE OF NEW YORK STATE
- UFC 1-200-01, DOD BUILDING CODE, CHANGE 1, 24 FEB 2023
- UFC 3-600-01, FIRE PROTECTION ENGINEERING FOR FACILITIES, CHANGE 6, 6 MAY 2021
- INTERNATIONAL BUILDING CODE (IBC) 2021 (AS REFERENCED BY UFC 1-200-01)

THE NATIONAL FIRE PROTECTION ASSOCIATION (NFPA) CODES AND STANDARDS AS REFERENCED BY THE UFC, INCLUDING BUT NOT LIMITED TO:

- NFPA 1, FIRE CODE, 2021
- NFPA 10, STANDARD FOR PORTABLE FIRE EXTINGUISHERS, 2022
- NFPA 13, STANDARD FOR THE INSTALLATION OF SPRINKLER SYSTEMS, 2022
- NFPA 20, STANDARD FOR THE INSTALLATION OF STATIONARY PUMPS FOR FIRE PROTECTION, 2022
- NFPA 24, STANDARD FOR THE INSTALLATION OF PRIVATE FIRE SERVICE MAINS AND THEIR APPURTENANCES, 2022
- NFPA 70, NATIONAL ELECTRICAL CODE, 2023
- NFPA 72, NATIONAL FIRE ALARM AND SIGNALING CODE, 2022
- NFPA 90A, STANDARD FOR THE INSTALLATION OF AIR-CONDITIONING AND VENTILATING SYSTEMS, 2021
- NFPA 101, LIFE SAFETY CODE, 2021
- NFPA 241, STANDARD FOR SAFEGUARDING CONSTRUCTION, ALTERATION, AND DEMOLITION OPERATIONS, 2022
- NFPA 291, RECOMMENDED PRACTICE FOR FIRE FLOW TESTING AND MARKING OF HYDRANTS, 2022
- NFPA 400, HAZARDOUS MATERIALS CODE, 2022

ABBREVIATIONS

AFF	ABOVE FINISHED FLOOR
AIM	ADDRESSABLE INPUT MONITOR
AMP	REMOTE AMPLIFIER CABINET
AOM	ADDRESSABLE OUTPUT MONITOR
ATS	AUTOMATIC TRANSFER SWITCH
BAS	BUILDING AUTOMATION SYSTEM
BLDG	BLDG
CA	CLEAN AGENT
CD	CANDELA
CFCI	CONTRACTOR FURNISHED CONTRACTOR INSTALLED
CHKV	CHECK VALVE
CHEM	CHEMICAL
CLDIP	CEMENT LINED DUCTILE IRON PIPE
CP	CONTROL PANEL
DB	DECIBEL
DIA	DIAMETER
DSD	DUCT SMOKE DETECTOR
EPO	EMERGENCY POWER OFF
ETR	EXISTING TO REMAIN
EXIST	EXISTING
FA	FIRE ALARM
FAAP	FIRE ALARM ANNUNCIATOR PANEL
FAB	FIRE ALARM BELL
FACU	FIRE ALARM CONTROL UNIT
FATC	FIRE ALARM TERMINAL CABINET
FAWS	FIRE ALARM RECEIVING WORK STATION
FDC	FIRE DEPARTMENT CONNECTION
FEC	FIRE EXTINGUISHER CABINET
FM	FACTORY MUTUAL
FMCU	FIRE ALARM/ MASS NOTIFICATION CONTROL UNIT
FO	FIBER OPTIC
FOTM	FIBER OPTIC TRANSCEIVER MODULE
FP	FIRE PROTECTION
FPC	FIRE PUMP CONTROLLER
FS	FLOW SWITCH
FT	FEET
GAL	GALLON
GC	GENERAL CONTRACTOR
GFGI	FOVERNMENT FURNISHED GOVERNMENT INSTALLED
GPM	GALLONS PER MINUTE
HVAC	HEATING, VENTILATION, AND AIR CONDITIONING
IAW	IN ACCORDANCE WITH
IBC	INTERNATIONAL BUILDING CODE
ID	INTERNAL DIAMETER
IN	INCHES
MFG	MANUFACTURER
MDC	MISSILE DEFENSE COMPLEX
MPS	ADDRESSABLE MANUAL PULL STATION
MSF	MAINTENANCE SUPPORT FACILITY
NAC	NOTIFICATION APPLIANCE CIRCUIT
NC	NORMALLY CLOSED
NFPA	NATIONAL FIRE PROTECTION ASSOCIATION
NIC	NOT IN CONTRACT
NLT	NO LESS THAN
NMT	NO MORE THAN
NTS	NOT TO SCALE
OS&Y	OUTSIDE STEM AND YOKE
PIV	POST INDICATOR VALVE
PLC	PROGRAMMABLE LOGIC CONTROLLER
PMP	PUMP
PSI	POUNDS PER SQUARE INCH
RCV	RISER CHECK VALVE
RTS	REMOTE TEST STATION
SCH	SCHEDULE (PIPE)
SD	PHOTOELECTRIC SMOKE DETECTOR
SF	SQUARE FEET/FOOT
SLC	SIGNALING LINE CIRCUIT
SPD	SURGE PROTECTION DEVICE
TBD	TO BE DETERMINED
TS	TAMPER SWITCH
TYP	TYPICAL
UFC	UNITED FACILITIES CRITERIA
UL	UNDERWRITER'S LABORATORIES
UON	UNLESS OTHERWISE NOTED
V	VALVE
WP	WEATHERPROOF
WSB	WATER SUPPLY BUILDING
ZCA	ZONE CONTROL ASSEMBLY

FIRE ALARM GENERAL NOTES

1. THE FIRE ALARM SYSTEM SHALL COMPLY WITH THE NEW YORK STATE BUILDING CODE, UFC 3-600-01, NFPA 70, NFPA 72, AND PROJECT SPECIFICATIONS.
2. PENETRATIONS IN FIRE AND/OR SMOKE RATED ASSEMBLIES SHALL BE FIRE-STOPPED WITH LISTED MATERIALS/ ASSEMBLIES IN ACCORDANCE WITH THE PROJECT SPECIFICATIONS.
3. FIRE SUPPRESSION SYSTEM WATERFLOW SWITCHES AND CONTROL VALVE SUPERVISORY SWITCHES SHALL BE MONITORED BY THE BUILDING FIRE ALARM/ MASS NOTIFICATION SYSTEM.
4. FIRE ALARM CONTRACTOR SHALL COORDINATE WITH THE FIRE SPRINKLER CONTRACTOR FOR SPECIFIC NUMBERS AND LOCATIONS OF ALL FLOW, TAMPER AND PRESSURE SWITCHES.
5. THE FIRE ALARM SYSTEM DRAWINGS ARE CONCEPTUAL. THE NUMBER OF DEVICES SHOWN ARE THE MINIMUM REQUIRED AND THE FINAL QUANTITY SHALL BE IN ACCORDANCE WITH THE APPLICABLE CODES, SPECIFICATIONS, AND MANUFACTURER'S EQUIPMENT LISTINGS. SHOP DRAWING SUBMITTAL TO SHOW DETAILED INITIATION DEVICE LOCATIONS IN ACCORDANCE WITH THE MANUFACTURER'S LISTED INSTALLATION REQUIREMENTS AND WIRE COUNT.
6. THE FIRE ALARM CONTRACTOR IS RESPONSIBLE FOR COORDINATION OF SYSTEM REQUIREMENTS WITH ALL CONDITIONS OF THE BUILDING AND SITE INCLUDING, BUT NOT LIMITED TO, BLIND SPACES, SHELVING, LIGHTS, HVAC GRILLES AND DIFFUSERS, PIPING, DUCT WORK, DOORS, WINDOWS, EQUIPMENT PLATFORMS, WALLS (FIRE RATED AND NON FIRE RATED), BEAMS, JOISTS, COLUMNS, HVAC EQUIPMENT, ELECTRICAL PANELS AND EQUIPMENT, CEILINGS, AREAS WITHOUT CEILINGS, WALL CONSTRUCTION, FLOORS AND ALL CONSTRUCTION, EQUIPMENT AND BUILDING APPURTENANCES.
7. THE FIRE ALARM CONTRACTOR SHALL BE RESPONSIBLE FOR PERFORMING, DOCUMENTING, AND CERTIFYING REQUISITE INSPECTION AND TESTS IN ACCORDANCE WITH APPLICABLE CODES AND STANDARDS FOR ALL FIRE ALARM EQUIPMENT FURNISHED UNDER THIS PROJECT. AFTER COMPLETING THE TESTING, THE CONTRACTOR SHALL DEMONSTRATE FULL OPERATIONAL CAPABILITY OF THE FIRE ALARM SYSTEM, AS WELL AS FULL COMPLIANCE WITH ALL DESIGN DOCUMENTS, CODES AND STANDARDS.
8. CONTRACTOR SHALL PROVIDE ALL MISCELLANEOUS MATERIAL FOR A COMPLETE INSTALLATION.
9. EACH CONVENTIONAL FIRE ALARM DEVICE MUST HAVE ITS OWN MONITOR MODULE.
10. FIRE ALARM CONTRACTOR SHALL UTILIZE ALARM VERIFICATION AS A STANDARD FEATURE FOR ALL ADDRESSABLE SMOKE DETECTORS. ALARM VERIFICATION SHALL BE ADJUSTABLE AND INITIALLY SET AT 20 SECONDS.
11. ALL CONDUCTORS SHALL BE INSTALLED IN METALLIC CONDUITS (EMT MINIMUM). ALL CONDUIT SHALL BE INSTALLED PERPENDICULAR AND/ OR PARALLEL WITH THE RESPECTIVE BUILDING LINES. ALL FIRE ALARM CONDUIT IN UNFINISHED SPACES SHALL BE PAINTED RED.
12. ALL CONDUIT FROM ANY FIRE ALARM DEVICE CONNECTED TO A DEVICE THAT MAY BE IN CONTACT WITH WATER SHALL BE LIQUID TIGHT. THIS INCLUDES, BUT IS NOT LIMITED TO, WATERFLOW SWITCHES, PRESSURE SWITCHES & TAMPER SWITCHES.
13. ALL AUDIBLE APPLIANCES WITHIN THE BUILDING AND ALL VISIBLE APPLIANCES WITHIN THE SAME ROOM SHALL BE SYNCHRONIZED.
14. CONTRACT DRAWINGS SHALL NOT BE RE-SUBMITTED AS SHOP DRAWING SUBMITTALS.
15. TELECOMMUNICATIONS CONDUIT SHALL BE INSTALLED IN ACCORDANCE WITH DIVISION 27 OF THE PROJECT SPECIFICATIONS.
16. PROVIDE A LABEL ON THE EXTERIOR OF EACH FIRE ALARM DEVICE THAT MATCHES THE DEVICE NUMBER (ADDRESS) AT THE FMCP. DEVICE ID NUMBERS SHALL BE VISIBLE FROM THE FLOOR TO THE MAXIMUM EXTENT PRACTICAL. MONITOR MODULES & CONTROL/RELAY MODULES SHALL ALSO BE LABELED AS TO WHAT THEY CONTROL.
17. STROBES AND HORN/STROBES SHALL HAVE A CLEAR LENS AND BE MARKED WITH THE WORD "ALERT".

FIRE ALARM SYMBOLS

FACP	ADDRESSABLE FIRE ALARM CONTROL PANEL
FAAP	FIRE ALARM ANNUNCIATOR PANEL
cd	STROBE ONLY - WALL MOUNT -cd DENOTES CANDELA RATING
cd C	STROBE ONLY - CEILING MOUNT -cd DENOTES CANDELA RATING
C	HORN ONLY -WP DENOTES WEATHERPROOF - C DENOTES CEILING MOUNTED
cd C	COMBINATION HORN/STROBE -C DENOTES CEILING MOUNT -cd DENOTES CANDELA RATING
S	SMOKE DETECTOR - PHOTOELECTRIC
S D	DUCT SMOKE DETECTOR
H	HEAT DETECTOR
	CARBON MONOXIDE DETECTOR
F	FIRE ALARM MANUAL PULL STATION
AIM	ADDRESSABLE INITIATING DEVICE MODULE
AOM	ADDRESSABLE CONTROL (RELAY) MODULE
PS	PRESSURE SWITCH
WF	WATERFLOW SWITCH
VS	TAMPER SWITCH
E	EXTERIOR FIRE ALARM BELL
SPD	SURGE SUPPRESSION DEVICE
RTS	REMOTE TEST STATION
RPS	REMOTE POWER SUPPLY
EOLR	END OF LINE RESISTOR

ISSUED FOR BID - FEBRUARY, 2026

THIS DRAWING PRODUCED ON REVIT
DO NOT REVISE MANUALLY

"THIS DOCUMENT IS THE PROPERTY OF NAVAL FACILITIES ENGINEERING COMMAND, PREPARED BY TETRA TECH ENGINEERING CORPORATION PC, AND IS PROVIDED UPON THE CONDITION THAT IT WILL NOT BE REPRODUCED, COPIED, OR ISSUED TO A THIRD PARTY, AND WILL BE USED SOLELY FOR THE ORIGINAL INTENDED PURPOSE AND SOLELY FOR THE EXECUTION OR REVIEW OF THE ENGINEERING CONSTRUCTION OF THE PROJECT".

IT IS A VIOLATION OF THE NEW YORK STATE EDUCATION LAW, ARTICLE 145, FOR ANY PERSON, UNLESS UNDER THE DIRECTION OF A NEW YORK STATE LICENSED PROFESSIONAL ENGINEER, TO ALTER AN ITEM ON THIS DOCUMENT IN ANY WAY.

SYM	DESCRIPTION	DATE	APPR

NAVFAC

STATE OF NEW YORK · ROCKWOOD J. EDWARDS · 090529 · LICENSED PROFESSIONAL ENGINEER

TETRA TECH
www.tetratech.com
4422 CORPORATION LANE, SUITE 300
VIRGINIA BEACH, VA 23462
PHONE: (757) 490-2788 FAX: (757) 490-4148
AE INFO

APPROVED
FOR COMMANDER NAVFAC

ACTIVITY
As per document from Nicole Coward, NAVFAC MIDLANT PLL/EV3
SATISFACTORY TO DATE 4/24/2026
DES RE DRW NM CHK MG
PM/DM
BRANCH MANAGER
CHIEF ENGIARCH
FIRE PROTECTION

DEPARTMENT OF THE NAVY
NAVAL FACILITIES ENGINEERING SYSTEMS COMMAND – MID-ATLANTIC
NAVAL INDUSTRIAL RESERVE ORDNANCE PLANT
NAVAL WEAPONS INDUSTRIAL RESERVE PLANT, BETHPAGE, NEW YORK
PHASE III - GROUNDWATER TREATMENT PLANT
WATER TREATMENT PLANT
FIRE ALARM GENERAL NOTES AND LEGEND

SCALE: AS NOTED
EPROJECT NO.
CONSTR. CONTR. NO. N62470-09-D-2002
NAVFAC DRAWING NO.
SHEET OF
FA001

DRAWFORM REVISION: 20 AUGUST 2020

4/22/2026 1:39:10 PM FA001
Autodesk Docs://12008005-WE24 Navy Bethpage NY-Phase III IR-112008005_PHASEIII_GWTP_v2023.rvt

NOTIFICATION: THIS PAGE CONTAINS SENSITIVE BUT UNCLASSIFIED INFORMATION WHICH IS PROTECTED BY THE FREEDOM OF INFORMATION ACT

EXEMPTION 3. (5 USC 552(b)(3))

Information exempted by other statutes

10 USC Section 130(e) Treatment of Certain Critical Infrastructure Security Information

Pages 94-96

TO REQUEST A COPY OF THE DOCUMENT PLEASE CONTACT

Department of the Navy
Freedom of Information Act Office

http://www.secnav.navy.mil/foia/Pages/default.aspx

GENERAL NOTES

1. FOR GENERAL FIRE ALARM NOTES AND LEGEND, REFER TO SHEET FA001.

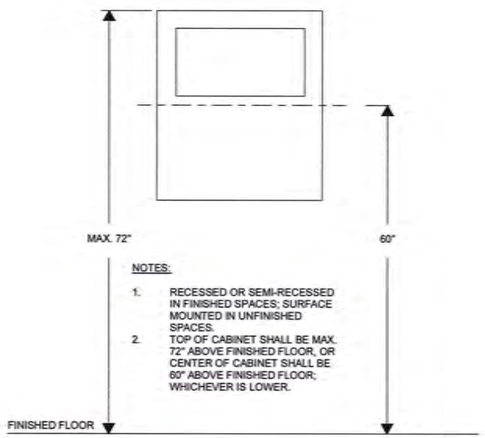

NOTES:

1. RECESSED OR SEMI-RECESSED IN FINISHED SPACES; SURFACE MOUNTED IN UNFINISHED SPACES.
2. TOP OF CABINET SHALL BE MAX. 72" ABOVE FINISHED FLOOR, OR CENTER OF CABINET SHALL BE 60" ABOVE FINISHED FLOOR; WHICHEVER IS LOWER.

1 / FA501 FACP AND FAA MOUNTING HEIGHTS
SCALE: N.T.S.

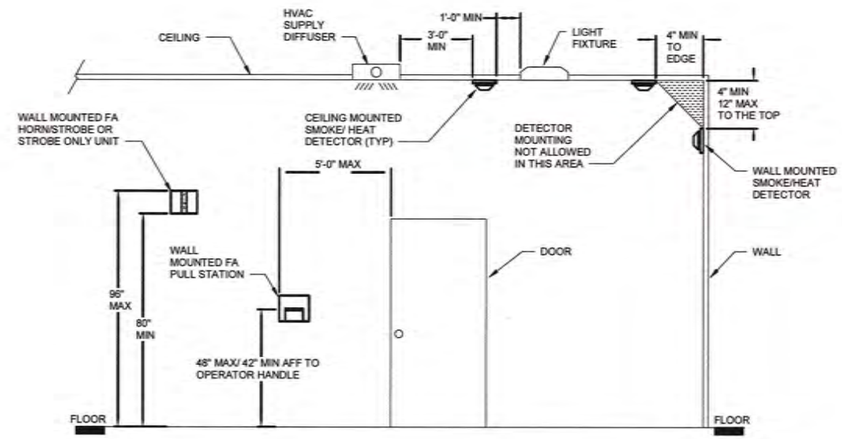

2 / FA501 MOUNTING REQUIREMENTS FOR FIRE ALARM DEVICES (TYPICAL)
SCALE: N.T.S.

ISSUED FOR BID - FEBRUARY, 2026

THIS DRAWING PRODUCED ON REVIT
DO NOT REVISE MANUALLY

"THIS DOCUMENT IS THE PROPERTY OF NAVAL FACILITIES ENGINEERING COMMAND, PREPARED BY TETRA TECH ENGINEERING CORPORATION PC, AND IS PROVIDED UPON THE CONDITION THAT IT WILL NOT BE REPRODUCED, COPIED, OR ISSUED TO A THIRD PARTY, AND WILL BE USED SOLELY FOR THE ORIGINAL INTENDED PURPOSE AND SOLELY FOR THE EXECUTION OR REVIEW OF THE ENGINEERING CONSTRUCTION OF THE PROJECT".

IT IS A VIOLATION OF THE NEW YORK STATE EDUCATION LAW, ARTICLE 145, FOR ANY PERSON, UNLESS UNDER THE DIRECTION OF A NEW YORK STATE LICENSED PROFESSIONAL ENGINEER, TO ALTER AN ITEM ON THIS DOCUMENT IN ANY WAY.

SYM	DESCRIPTION	DATE	APPR

NAVFAC

STATE OF NEW YORK · RICHWOOD J. EDWARDS · 090529 · LICENSED PROFESSIONAL ENGINEER

TETRA TECH
www.tetratech.com
4420 CORPORATION LANE, SUITE 300
VIRGINIA BEACH, VA 23462
PHONE: (757) 461-3788 FAX: (757) 461-4148

APPROVED
FOR COMMANDER NAVFAC
ACTIVITY
As per document from Nicole Coward, NAVFAC MIDLANT PL/EV3
SATISFACTORY TO DATE 4/24/2026
DES RE | DRW NM | CHK MG
PM/CM
BRANCH MANAGER
CHIEF ENGIN/CH
FIRE PROTECTION

DEPARTMENT OF THE NAVY
NAVAL FACILITIES ENGINEERING SYSTEMS COMMAND – MID-ATLANTIC
NAVAL INDUSTRIAL RESERVE ORDNANCE PLANT
NAVAL WEAPONS INDUSTRIAL RESERVE PLANT
BETHPAGE, NEW YORK
PHASE III - GROUNDWATER TREATMENT PLANT
WATER TREATMENT PLANT
FIRE ALARM DETAILS

SCALE: AS NOTED
EPROJECT NO.:
CONSTR. CONTR. NO. N62472-96-D-0002
NAVFAC DRAWING NO.
SHEET OF
FA501

DRAWING REVISION: 26 AUGUST 2025

4/22/2026 1:39:14 PM FA501
Autodesk Docs://12008005 WE24 Navy Bethpage NY-Phase III IF-11200800S_PHASEIII_GWTP_v2023.rvt

GENERAL NOTES NOTES

1. FOR GENERAL FIRE ALARM NOTES AND LEGEND, REFER TO SHEET FA001.
2. ACTUAL NUMBER OF DEVICES PER NOTIFICATION APPLIANCE CIRCUIT SHALL BE DETERMINED BY THE FIRE ALARM CONTRACTOR'S DETAILED VOLTAGE DROP AND BATTERY CALCULATIONS.
3. THE FIRE ALARM CONTRACTOR SHALL PROVIDE DETAILED POINT TO POINT WIRING DIAGRAMS WITH UNIQUE DEVICE NAMES FOR EACH FIRE ALARM DEVICE.
4. EACH NOTIFICATION APPLIANCE CIRCUIT SHALL INCLUDE A MINIMUM 25% SPARE CAPACITY.
5. PROVIDE MINIMUM 20% SPARE CAPACITY FOR FIRE ALARM BATTERIES IAW NFPA 72.
6. INITIATING DEVICE CIRCUIT PATHWAYS, SIGNALING LINE CIRCUIT PATHWAYS, AND NOTIFICATION APPLIANCE CIRCUIT PATHWAYS SHALL BE CLASS B AS DEFINED BY NFPA 72.
7. THE FIRE ALARM RISER DIAGRAM IS ONLY DIAGRAMMATIC. REFER TO THE FIRE ALARM PLANS FOR EXACT NUMBER OF DEVICES.
8. PROVIDE SURGE PROTECTION DEVICES (SPD) FOR ALL 120 VAC CIRCUITS TO CONTROL PANELS, SUBPANELS, TRANSMITTERS, AMPLIFIER PANELS, AND BOOSTER PANELS. THE SPD MUST HAVE BOTH A UL 1449 AND UL 1283 LISTING AND MUST BE LOCATED IN AN ADJACENT HINGED TERMINAL BOX.

	ANNUNCIATION AT FACP			TRANSMIT SIGNALS TO RECEIVING STATION				NOTIFICATION			AUXILIARY FUNCTIONS			
	AUDIO-VISUAL FIRE ALARM INDICATION BY DEVICE	AUDIO-VISUAL SUPERVISORY INDICATION BY DEVICE	AUDIO-VISUAL TROUBLE INDICATION BY DEVICE	FIRE ALARM SIGNAL BY DEVICE TYPE	COMMON SUPERVISORY SIGNAL	COMMON TROUBLE SIGNAL		INITIATE FIRE ALARM AUDIO-VISUAL NOTIFICATION APPLIANCES	ACTIVATE EXTERIOR WATERFLOW ALARM BELL		SHUT DOWN BUILDING VENT FANS	SHUT DOWN HVLS CEILING FANS	TRANSMIT SIGNAL TO CONTROL ROOM PLC RELAY	FIRE ALARM OVERRIDE OF EMERGENCY LIGHTING
ALARM SIGNALS														
MANUAL FIRE ALARM PULL STATION	●			●				●			●	●	●	●
SPRINKLER WATERFLOW SWITCH	●			●				●	●		●	●	●	●
SMOKE DETECTOR	●			●				●			●	●	●	●
FIRE PUMP RUNNING	●			●										
SUPERVISORY SIGNALS														
SUPERVISORY SIGNAL BY DEVICE		●			●									
VALVE SUPERVISORY SWITCH		●			●									
TROUBLE SIGNALS														
SIGNALING LINE CIRCUIT OPEN			●			●								
SIGNALING LINE CIRCUIT SHORT			●			●								
SIGNALING LINE CIRCUIT GROUND			●			●								
FACP LOW BATTERY VOLTAGE			●			●								
FACP CIRCUIT FAULT			●			●								
FACP SUPERVISED COMPONENT FAILURE			●			●								
FACP AC POWER FALIURE			●			●								
NOTIFICATION APPLIANCE CIRCUIT SHORT			●			●								
FIRE PUMP - LOSS OF PHASE POWER			●			●								
FIRE PUMP - PHASE REVERSAL			●			●								
FIRE PUMP - CONTROLLER OR SYSTEM TROUBLE			●			●								

1 FA601 FIRE ALARM FUNCTIONAL MATRIX
SCALE: N.T.S.

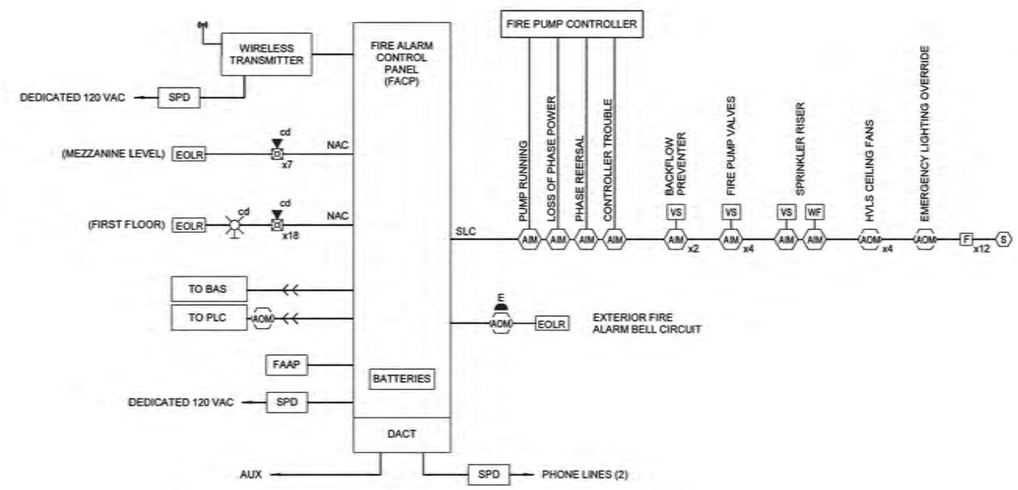

2 FA601 FIRE ALARM RISER DIAGRAM
SCALE: N.T.S.

ISSUED FOR BID - FEBRUARY, 2026

THIS DRAWING PRODUCED ON REVIT
DO NOT REVISE MANUALLY

"THIS DOCUMENT IS THE PROPERTY OF NAVAL FACILITIES ENGINEERING COMMAND, PREPARED BY TETRA TECH ENGINEERING CORPORATION PC, AND IS PROVIDED UPON THE CONDITION THAT IT WILL NOT BE REPRODUCED, COPIED, OR ISSUED TO A THIRD PARTY, AND WILL BE USED SOLELY FOR THE ORIGINAL INTENDED PURPOSE AND SOLELY FOR THE EXECUTION OR REVIEW OF THE ENGINEERING CONSTRUCTION OF THE PROJECT".

IT IS A VIOLATION OF THE NEW YORK STATE EDUCATION LAW, ARTICLE 145, FOR ANY PERSON, UNLESS UNDER THE DIRECTION OF A NEW YORK STATE LICENSED PROFESSIONAL ENGINEER, TO ALTER AN ITEM ON THIS DOCUMENT IN ANY WAY.

SYM	DESCRIPTION	DATE	APPR

NAVFAC

STATE OF NEW YORK · ROCKWOOD J. EDWARDS · 090529 · LICENSED PROFESSIONAL ENGINEER

TETRA TECH
www.tetratech.com
4420 CORPORATION LANE, SUITE 320
VIRGINIA BEACH, VA 23462
PHONE: (757) 461-2700 FAX: (757) 461-4140

APPROVED
FOR COMMANDER NAVFAC
ACTIVITY
As per document from Nicole Coward, NAVFAC MIDLANT PLL/EV3
SATISFACTORY TO DATE 4/24/2026
DES RE DRW NM CHK MG
PWCM
BRANCH MANAGER
CHIEF ENGIN/CH
FIRE PROTECTION

DEPARTMENT OF THE NAVY
NAVAL FACILITIES ENGINEERING SYSTEMS COMMAND – MID-ATLANTIC
NAVAL INDUSTRIAL RESERVE ORDNANCE PLANT
NAVAL WEAPONS INDUSTRIAL RESERVE PLANT
BETHPAGE, NEW YORK
PHASE III - GROUNDWATER TREATMENT PLANT
WATER TREATMENT PLANT
FIRE ALARM RISER DIAGRAM AND FUNCTIONAL MATRIX

SCALE: AS NOTED
EPROJECT NO.
CONSTR. CONTR. NO. N62472-99-D-3002
NAVFAC DRAWING NO.
SHEET OF
FA601

DRAWFORM REVISION: 26 AUGUST 2020

FA601
4/22/2026 1:30:14 PM
Autodesk Docs://1120080005/WEIA Navy: Bethpage NY Phase III IF-1120080005_PHASEIII_GWTP_v2023.rvt

PRIMARY APPLICABLE CODES

- 2020 BUILDING CODE OF NEW YORK STATE
- UFC 1-200-01, DOD BUILDING CODE, CHANGE 1, 24 FEB 2023
- UFC 3-600-01, FIRE PROTECTION ENGINEERING FOR FACILITIES, CHANGE 6, 6 MAY 2021
- INTERNATIONAL BUILDING CODE (IBC) 2021 (AS REFERENCED BY UFC 1-200-01)

THE NATIONAL FIRE PROTECTION ASSOCIATION (NFPA) CODES AND STANDARDS AS REFERENCED BY THE UFC, INCLUDING BUT NOT LIMITED TO:

- NFPA 1, FIRE CODE, 2021
- NFPA 10, STANDARD FOR PORTABLE FIRE EXTINGUISHERS, 2022
- NFPA 13, STANDARD FOR THE INSTALLATION OF SPRINKLER SYSTEMS, 2022
- NFPA 20, STANDARD FOR THE INSTALLATION OF STATIONARY PUMPS FOR FIRE PROTECTION, 2022
- NFPA 24, STANDARD FOR THE INSTALLATION OF PRIVATE FIRE SERVICE MAINS AND THEIR APPURTENANCES, 2022
- NFPA 70, NATIONAL ELECTRICAL CODE, 2023
- NFPA 72, NATIONAL FIRE ALARM AND SIGNALING CODE, 2022
- NFPA 90A, STANDARD FOR THE INSTALLATION OF AIR-CONDITIONING AND VENTILATING SYSTEMS, 2021
- NFPA 101, LIFE SAFETY CODE, 2021
- NFPA 241, STANDARD FOR SAFEGUARDING CONSTRUCTION, ALTERATION, AND DEMOLITION OPERATIONS, 2022
- NFPA 291, RECOMMENDED PRACTICE FOR FIRE FLOW TESTING AND MARKING OF HYDRANTS, 2022
- NFPA 400, HAZARDOUS MATERIALS CODE, 2022

HYDRANT FLOW TEST DATA

TEST DATE:	JANUARY 24, 2024
TEST LOCATION:	TWIN LN N & TALLY LN, WANTAGH, NY 11793
FLOW HYDRANT:	#319 (TWIN LN N)
GAUGE HYDRANT:	#317 (TALLY LN)
PERFORMED BY:	LIBERTY UTILITIES
WITNESSED BY:	N. MARTIN, PE, TETRA TECH

TEST RESULTS:

STATIC:	46 PSI
RESIDUAL:	36 PSI
OBSERVED FLOW:	920 GPM
EXPECTED FLOW @ 20 PSI:	1,540 GPM

NOTES:
1. REFER TO FIRE HYDRANT TEST REPORT FOR ADDITIONAL INFORMATION.
2. CONTRACTOR IS RESPONSIBLE TO PERFORM A NEW FLOW TEST IAW NFPA 291 AND PERFORM HYDRAULIC CALCULATIONS BASED ON THE NEW FLOW TEST RESULTS.

ABBREVIATIONS

AFF	ABOVE FINISHED FLOOR
AMP	REMOTE AMPLIFIER CABINET
ATS	AUTOMATIC TRANSFER SWITCH
BLDG	BLDG
CA	CLEAN AGENT
CD	CANDELA
CFCI	CONTRACTOR FURNISHED CONTRACTOR INSTALLED
CHKV	CHECK VALVE
CHEM	CHEMICAL
CLDIP	CEMENT LINED DUCTILE IRON PIPE
CP	CONTROL PANEL
DB	DECIBEL
DIA	DIAMETER
DSD	DUCT SMOKE DETECTOR
EPO	EMERGENCY POWER OFF
ETR	EXISTING TO REMAIN
EXIST	EXISTING
FA	FIRE ALARM
FAB	FIRE ALARM BELL
FACU	FIRE ALARM CONTROL UNIT
FATC	FIRE ALARM TERMINAL CABINET
FAWS	FIRE ALARM RECEIVING WORK STATION
FDC	FIRE DEPARTMENT CONNECTION
FEC	FIRE EXTINGUISHER CABINET
FM	FACTORY MUTUAL
FMCU	FIRE ALARM/ MASS NOTIFICATION CONTROL UNIT
FO	FIBER OPTIC
FOTM	FIBER OPTIC TRANSCEIVER MODULE
FP	FIRE PROTECTION/ FIRE PUMP
FPCP	FIRE PUMP CONTROL PANEL
FS	FLOW SWITCH
FT	FEET
GAL	GALLON
GC	GENERAL CONTRACTOR
GFGI	FOVERNMENT FURNISHED GOVERNMENT INSTALLED
GPM	GALLONS PER MINUTE
HVAC	HEATING, VENTILATION, AND AIR CONDITIONING
IAW	IN ACCORDANCE WITH
IBC	INTERNATIONAL BUILDING CODE
ID	INTERNAL DIAMETER
IN	INCHES
JPCP	JOCKEY PUMP CONTROL PANEL
MFG	MANUFACTURER
MDC	MISSILE DEFENSE COMPLEX
MPS	ADDRESSABLE MANUAL PULL STATION
MSF	MAINTENANCE SUPPORT FACILITY
NAC	NOTIFICATION APPLIANCE CIRCUIT
NC	NORMALLY CLOSED
NFPA	NATIONAL FIRE PROTECTION ASSOCIATION
NIC	NOT IN CONTRACT
NLT	NO LESS THAN
NMT	NO MORE THAN
NTS	NOT TO SCALE
OS&Y	OUTSIDE STEM AND YOKE
PIV	POST INDICATOR VALVE
PMP	PRESSURE MAINTENANCE PUMP
PSI	POUNDS PER SQUARE INCH
RCV	RISER CHECK VALVE
RTS	REMOTE TEST STATION
SCH	SCHEDULE (PIPE)
SD	PHOTOELECTRIC SMOKE DETECTOR
SF	SQUARE FEET/FOOT
SLC	SIGNALING LINE CIRCUIT
SPD	SURGE PROTECTION DEVICE
TBD	TO BE DETERMINED
TS	TAMPER SWITCH
TYP	TYPICAL
UFC	UNITED FACILITIES CRITERIA
UL	UNDERWRITER'S LABORATORIES
UON	UNLESS OTHERWISE NOTED
V	VALVE
VS	VALVE SUPERVISORY SWITCH
WF	WATERFLOW SWITCH
WP	WEATHERPROOF
WSB	WATER SUPPLY BUILDING
ZCA	ZONE CONTROL ASSEMBLY

FIRE PROTECTION GENERAL NOTES

1. FIRE PROTECTION SYSTEMS SHALL COMPLY WITH PROJECT SPECIFICATIONS, UFC 3-600-01, NFPA 13, NFPA 24, AND ALL APPLICABLE CODES AND STANDARDS.
2. THESE DRAWINGS ARE DIAGRAMMATIC AND INDICATE A GENERAL ARRANGEMENT OF WORK. GENERAL DESIGN CONCEPTS INDICATED MUST BE FOLLOWED OR BETTERED. THE CONTRACTOR SHALL INCLUDE OFFSETS, ADDITIONAL PIPING, ADDITIONAL SPRINKLERS, VALVES, AND FIRE PROTECTION EQUIPMENT AS REQUIRED TO MEET CONSTRUCTION CONDITIONS FOR A PROPER OPERATION. DEVELOP AND SUBMIT COORDINATION DRAWINGS.
3. PIPING IS SHOWN FOR INFORMATION AND GENERAL ROUTING. THE CONTRACTOR SHALL PROVIDE FINAL ROUTING FOR ALL PIPING AND SHALL PROVIDE SHOP DRAWINGS THAT INCLUDE: EXACT DIMENSIONED ROUTING OF ALL PIPE, PIPE SIZES, AND FIRE RATED CONSTRUCTION PENETRATION DETAILS. THE CONTRACTOR SHALL AVOID INTERFERENCES WITH OTHER PIPING, EQUIPMENT, DUCTWORK, CODE REQUIRED CLEARANCES, AND THE WORK OF OTHER DISCIPLINES.
4. FIELD ROUTE D LIQUID-FILLED PIPING SHALL NOT BE ROUTED ABOVE LECTRICAL OR ELECTRONIC EQUIPMENT.
5. INSTALLATION CONTRACTOR SHALL OBTAIN ALL REQUIRED PERMITS AND LICENSES.
6. DESIGN AND INSTALLATION SUBJECT TO FINAL INSPECTION AND APPROVAL BY CONTRACTING OFFICER.
7. CUTTING OF STRUCTURAL AND/OR ARCHITECTURAL MEMBERS SHALL BE DONE ONLY WITH THE WRITTEN APPROVAL OF THE CONTRACTING OFFICER.
8. FIRE STOP ALL PENETRATIONS OF SMOKE/FIRE WALLS, FIRE RATED WALLS/BARRIERS, CEILINGS, FLOOR, ROOFS, ETC. IAW THE PROJECT SPECIFICATIONS. FLASH AND COUNTERFLASH ANY ROOF PENETRATIONS.
9. METHOD OF HANGING PIPES, HEADERS, AND BRANCHLINES SHALL BE IN ACCORDANCE WITH NFPA 13. ALL SUPPORTS SHALL BE ATTACHED TO THE BUILDING'S STRUCTURAL FRAME. PIPING SHALL NOT BE HUNG DIRECTLY FROM METAL DECKING.
10. ROD STIFFENER IS REQUIRED FOR ALL-THREAD ROD HANGERS OVER 6 FT IN LENGTH.
11. ALL VALVES FOR FIRE SERVICE SHALL BE UL LISTED AND/OR FM APPROVED. VALVES SHALL BE FACTORY MARKED "UL" AND/OR "FM" OR EQUIVALENT, 175 PSI WORKING PRESSURE.
12. ALL NORMALLY OPEN VALVES ON THE FIRE PROTECTION SYSTEM SHALL BE ELECTRICALLY SUPERVISED AND SHALL BE THE RESPONSIBILITY OF THE FIRE SPRINKLER CONTRACTOR.
13. PROVIDE A PERMANENTLY ATTACHED HYDRAULIC NAME PLATE STATING THE REQUIRED DESIGN CRITERIA FOR EACH HYDRAULICALLY DESIGNED SYSTEM IAW NFPA 13.
14. ONLY NEW MATERIALS SHALL BE USED IN THE INSTALLATION OF THESE SYSTEMS.
15. INSTALL EQUIPMENT IAW THE MANUFACTURER'S INSTRUCTIONS.
16. INSTALL UNIONS IN PIPES 2 IN AND SMALLER, ADJACENT TO EACH VALVE. UNIONS ARE NOT REQUIRED ON FLANGED DEVICES OR IN PIPING INSTALLATIONS USING GROOVED MECHANICAL COUPLINGS.
17. SPRINKLERS SHALL BE LOCATED IN THE CENTER OF CEILING TILES UNLESS SPECIFICALLY NOTED OTHERWISE.
18. ALL SPRINKLERS INSTALLED IN THIS FACILITY SHALL BE MINIMUM INTERMEDIATE TEMPERATURE RATED AND CORROSION RESISTANT. SPRINKLERS IN OTHER HIGH HEAT AREAS SHALL HAVE A TEMPERATURE CLASSIFICATION IAW NFPA 13.
19. SPRINKLERS SHALL BE PROVIDED BELOW OBSTRUCTIONS GREATER THAN 4 FT IN WIDTH SUCH AS DUCTWORK, CATWALKS, ETC. COORDINATE WITH ALL DISCIPLINES.
20. PROVIDE LISTED SPRINKLER GUARDS FOR SPRINKLERS LESS THAN 7 FT ABOVE FINISHED FLOOR IN UNFINISHED AREAS, IN ALL ELECTRICAL AND COMMUNICATIONS ROOMS WITHOUT CEILINGS, AND WHERE OTHERWISE SUBJECT TO MECHANICAL DAMAGE.
21. EQUIPMENT AND VALVES SHALL BE INSTALLED WITH A MINIMUM CLEARANCE OF 36" ACCESS TO AND IN FRONT OF ALL EQUIPMENT AND A MINIMUM 6" IN BEHIND THE EQUIPMENT.
22. SAFEGUARDING DURING CONSTRUCTION SHALL BE IAW ARMY CORPS OF ENGINEERING MANUAL (EM) EM-385-1-1, SAFETY AND HEALTH REQUIREMENTS MANUAL AND NFPA 241. CONTRACTOR SHALL COORDINATE SPECIFIC PLAN FOR FIRE PROTECTION DURING CONSTRUCTION WITH THE CONTRACTING OFFICER.

FIRE PROTECTION SYMBOLS

- HYDRAULIC REFERENCE NODE
- HYDRAULIC REFERENCE NODE - SPRINKLER
- OS&Y VALVE WITH TAMPER SWITCH
- BUTTERFLY VALVE WITH TAMPER SWITCH
- CHECK VALVE
- WF — WATERFLOW SWITCH
- PRESSURE REDUCING VALVE
- POST INDICATOR VALVE
- R — RISER CHECK VALVE
- BACKFLOW PREVENTER - DOUBLE CHECK
- UPRIGHT SPRINKLER
- PENDENT SPRINKLER
- SIDEWALL SPRINKLER
- —SP— WET PIPE SYSTEM
- [X'-X"] PIPE ELEVATION AFF
- FIRE DEPARTMENT CONNECTION
- PIPE CONTINUATION
- DIRECTION OF FLOW
- PIPE CAP
- FP — FIRE PUMP
- J — PRESSURE MAINTENANCE (JOCKEY) PUMP
- FLOW METER

ISSUED FOR BID - FEBRUARY, 2026

THIS DRAWING PRODUCED ON REVIT
DO NOT REVISE MANUALLY

"THIS DOCUMENT IS THE PROPERTY OF NAVAL FACILITIES ENGINEERING COMMAND, PREPARED BY TETRA TECH ENGINEERING CORPORATION PC, AND IS PROVIDED UPON THE CONDITION THAT IT WILL NOT BE REPRODUCED, COPIED, OR ISSUED TO A THIRD PARTY, AND WILL BE USED SOLELY FOR THE ORIGINAL INTENDED PURPOSE AND SOLELY FOR THE EXECUTION OR REVIEW OF THE ENGINEERING CONSTRUCTION OF THE PROJECT".

IT IS A VIOLATION OF THE NEW YORK STATE EDUCATION LAW, ARTICLE 145, FOR ANY PERSON, UNLESS UNDER THE DIRECTION OF A NEW YORK STATE LICENSED PROFESSIONAL ENGINEER, TO ALTER AN ITEM ON THIS DOCUMENT IN ANY WAY.

SYM	DESCRIPTION	DATE	APPR

NAVFAC

STATE OF NEW YORK · ROCKWOOD J. EDWARDS · 090529 · LICENSED PROFESSIONAL ENGINEER

TETRA TECH
www.tetratech.com
4420 CORPORATION LANE, SUITE 300
VIRGINIA BEACH, VA 23462
PHONE: (757) 461-2782 FAX: (757) 461-4140
KE INFO

APPROVED
FOR COMMANDER NAVFAC
ACTIVITY
As per document from Nicole Coward, NAVFAC MIDLANT PLL/EV3
SATISFACTORY TO DATE 4/24/2026
DES RE DRW NM CHK MG
PM/DM
BRANCH MANAGER
CHIEF ENGINEER
FIRE PROTECTION

DEPARTMENT OF THE NAVY
NAVAL FACILITIES ENGINEERING SYSTEMS COMMAND – MID-ATLANTIC
NAVAL INDUSTRIAL RESERVE ORDNANCE PLANT
NAVAL WEAPONS INDUSTRIAL RESERVE PLANT
BETHPAGE, NEW YORK
PHASE III - GROUNDWATER TREATMENT PLANT
WATER TREATMENT PLANT
FIRE PROTECTION GENERAL NOTES AND LEGEND

SCALE: AS NOTED
EPROJECT NO.:
CONSTR. CONTR. NO. N62472-95-D-5502
NAVFAC DRAWING NO.
SHEET OF
FX001

DRAWFORM REVISION 25 AUGUST 2020

4/22/2026 1:39:15 PM FX001
Autodesk Docs://12009005-WE24 Navy Bethpage NY-Phase III-F-112009005_PHASEIII_GWTP_v2023.rvt

NOTIFICATION: THIS PAGE CONTAINS SENSITIVE BUT UNCLASSIFIED INFORMATION WHICH IS PROTECTED BY THE FREEDOM OF INFORMATION ACT

EXEMPTION 3. (5 USC 552(b)(3))

Information exempted by other statutes

10 USC Section 130(e) Treatment of Certain Critical Infrastructure Security Information

Pages 100-106

TO REQUEST A COPY OF THE DOCUMENT PLEASE CONTACT

Department of the Navy
Freedom of Information Act Office

http://www.secnav.navy.mil/foia/Pages/default.aspx

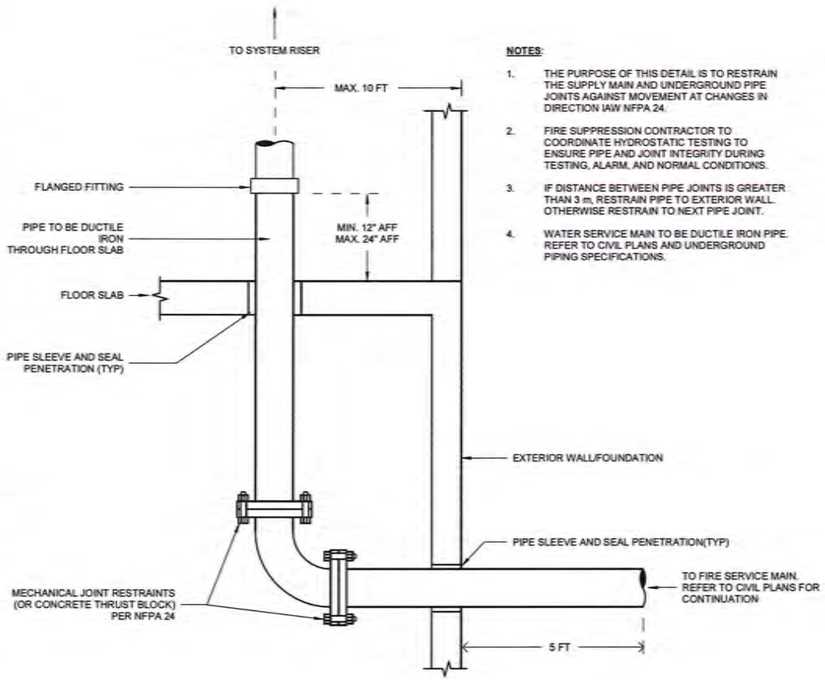

NOTES:

1. THE PURPOSE OF THIS DETAIL IS TO RESTRAIN THE SUPPLY MAIN AND UNDERGROUND PIPE JOINTS AGAINST MOVEMENT AT CHANGES IN DIRECTION IAW NFPA 24.
2. FIRE SUPPRESSION CONTRACTOR TO COORDINATE HYDROSTATIC TESTING TO ENSURE PIPE AND JOINT INTEGRITY DURING TESTING, ALARM, AND NORMAL CONDITIONS.
3. IF DISTANCE BETWEEN PIPE JOINTS IS GREATER THAN 3 m, RESTRAIN PIPE TO EXTERIOR WALL. OTHERWISE RESTRAIN TO NEXT PIPE JOINT.
4. WATER SERVICE MAIN TO BE DUCTILE IRON PIPE. REFER TO CIVIL PLANS AND UNDERGROUND PIPING SPECIFICATIONS.

1 FX501 UNDERGROUND PIPING ENTRY THROUGH FOUNDATION
SCALE: N.T.S.

NOTES:

1. PROVIDE SPARE PARTS AS RECOMMENDED BY MANUFACTURER AND ANY SPECIAL TOOL REQUIRED.
2. MIN. CLEARANCE SHALL BE 3'-0" IN FRONT OF BFP AND 6" BEHIND BFP.
3. PROVIDE 2-1/2" HOSE VALVES DOWNSTREAM OF BACKFLOW PREVENTER TO PERMIT FULL FLOW TESTING. PROVIDE ONE HOSE VALVE PER 250 GPM OF SYSTEM DEMAND OR FRACTION THEREOF.
4. CONTRACTOR TO TEST BFP PRIOR TO TURNOVER TO OWNER.

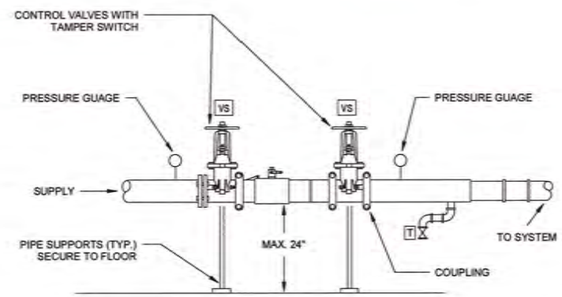

2 FX501 DOUBLE CHECK VALVE ASSEMBLY
SCALE: N.T.S.

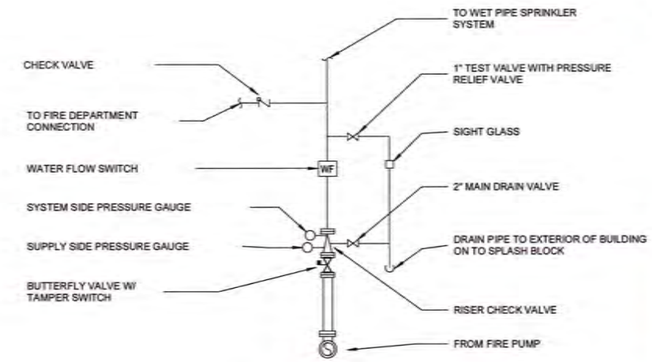

3 FX501 SPRINKLER RISER
SCALE: N.T.S.

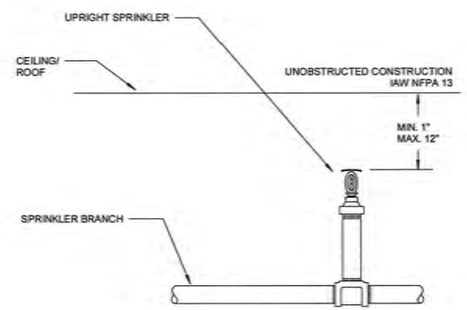

4 FX501 UPRIGHT SPRINKLER (UNOBSTRUCTED)
SCALE: N.T.S.

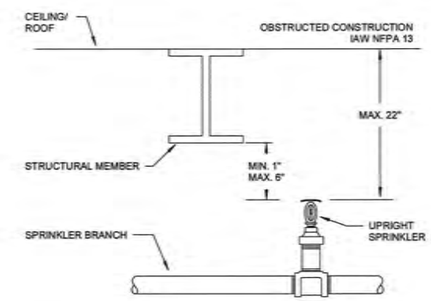

5 FX501 UPRIGHT SPRINKLER (OBSTRUCTED)
SCALE: N.T.S.

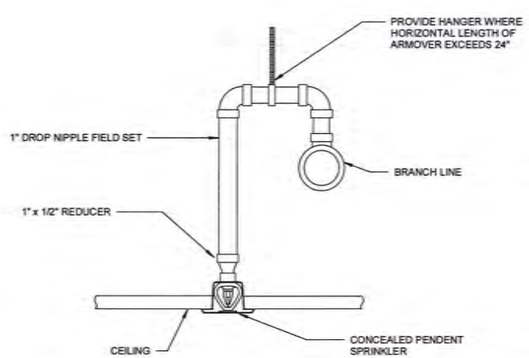

6 FX501 CONCEALED SPRINKLER ARM-OVER
SCALE: N.T.S.

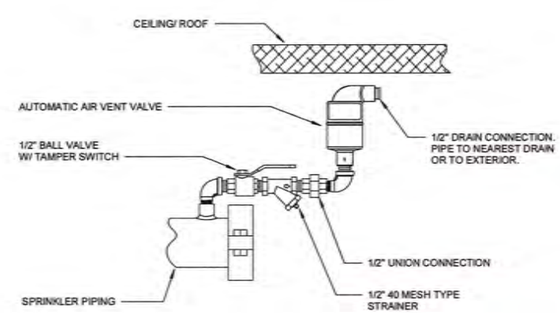

7 FX501 AUTOMATIC AIR VENT
SCALE: N.T.S.

ISSUED FOR BID - FEBRUARY, 2026

THIS DRAWING PRODUCED ON REVIT
DO NOT REVISE MANUALLY

"THIS DOCUMENT IS THE PROPERTY OF NAVAL FACILITIES ENGINEERING COMMAND, PREPARED BY TETRA TECH ENGINEERING CORPORATION PC, AND IS PROVIDED UPON THE CONDITION THAT IT WILL NOT BE REPRODUCED, COPIED, OR ISSUED TO A THIRD PARTY, AND WILL BE USED SOLELY FOR THE ORIGINAL INTENDED PURPOSE AND SOLELY FOR THE EXECUTION OR REVIEW OF THE ENGINEERING CONSTRUCTION OF THE PROJECT".

IT IS A VIOLATION OF THE NEW YORK STATE EDUCATION LAW, ARTICLE 145, FOR ANY PERSON, UNLESS UNDER THE DIRECTION OF A NEW YORK STATE LICENSED PROFESSIONAL ENGINEER, TO ALTER AN ITEM ON THIS DOCUMENT IN ANY WAY.

SYM	DESCRIPTION	DATE	APPR

NAVFAC

STATE OF NEW YORK — ROCKWOOD J. EDWARDS — LICENSED PROFESSIONAL ENGINEER

TETRA TECH
www.tetratech.com
4423 CORPORATION LANE, SUITE 300
VIRGINIA BEACH, VA 23462
PHONE: (757) 461-2700 FAX: (757) 461-4148
HS INFO

APPROVED
FOR COMMANDER NAVFAC 4/30/2026

ACTIVITY
As per document from Nicole Coward, NAVFAC MIDLANT PLL/EV3

SATISFACTORY TO DATE 4/24/2026

DES RE | DRW NM | CHK MG

PM/CM
BRANCH MANAGER
CHIEF ENG/ARCH
FIRE PROTECTION

DEPARTMENT OF THE NAVY
NAVAL FACILITIES ENGINEERING SYSTEMS COMMAND – MID-ATLANTIC
NAVAL FACILITIES ENGINEERING COMMAND
NAVAL INDUSTRIAL RESERVE ORDNANCE PLANT
NAVAL WEAPONS INDUSTRIAL RESERVE PLANT
BETHPAGE, NEW YORK
PHASE III - GROUNDWATER TREATMENT PLANT
WATER TREATMENT PLANT
FIRE PROTECTION DETAILS

SCALE: AS NOTED
PROJECT NO.:
CONSTR. CONTR. NO. N62472-99-D-0002
NAVFAC DRAWING NO.
SHEET OF
FX501

DRAWFORM REVISION: 28 AUGUST 2020

FX501
4/22/2026 1:39:23 PM
Autodesk Docs://12009005-VR24 Navy- Bethpage NY- Phase III /F-1120/09005_PHASEIII_GWTP_v2023.rvt

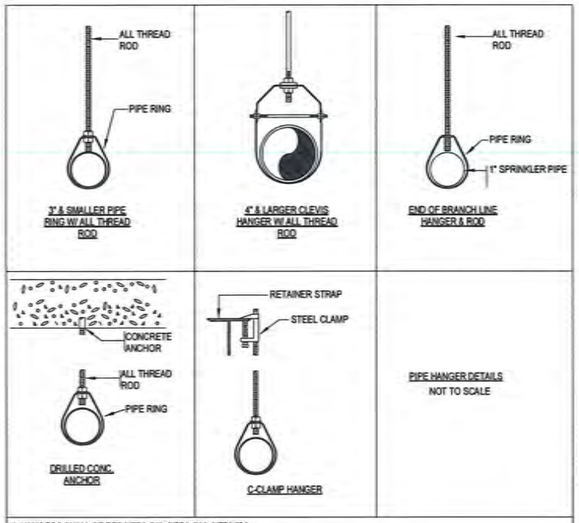

1. HANGERS SHALL BE PER NFPA #13 -NFPA #14 -NFPA#24 .
2. HANGERS DISTANCES/THREADED ROD SIZES/ FASTENER SIZES (SEE CHART BELOW).
3. ALL MATERIALS TO BE ZINC/GALVANIZED

MAXIMUM DISTANCE BETWEEN HANGERS PER NFPA #13

NOMINAL PIPE SIZE	1"	1-½"	1-½"	2"	2½"	3"	4"	6"
STEEL PIPE SCH.10/SCH.40	12'-0"	12'-0"	15'-0"	15'-0"	15'-0"	15'-0"	15'-0"	15'-0"
THREADED ROD DIAMETER	3/8"	3/8"	3/8"	3/8"	3/8"	3/8"	3/8"	1/2"
CONC. ANCHOR DIAMETER	3/8"	3/8"	3/8"	3/8"	3/8"	3/8"	3/8"	1/2"

1 PIPE HANGER SCHEDULE
FX502 SCALE: N.T.S.

NOMINAL PIPE SIZE (in)	NFPA REQUIRED SLEEVE OR HOLE SIZE (in)
1	3
1-1/4	4
1-1/2	4
2	4
2-1/2	6
3	6
4	8
6	10
8	12

NFPA 13
18.4.1 CLEARANCE SHALL BE PROVIDED AROUND ALL PIPING EXTENDING THROUGH WALLS, FLOORS, PLATFORMS, AND FOUNDATIONS, INCLUDING DRAINS, FIRE DEPARTMENT CONNECTIONS, AND OTHER AUXILIARY PIPING.

18.4.2 UNLESS THE REQUIREMENTS OF 18.4.3 THROUGH 18.4.7 OR 18.4.10 ARE MET, WHERE PIPE PASSES THROUGH HOLES IN PLATFORMS, FOUNDATIONS, WALLS, OR FLOORS, THE HOLES SHALL BE SIZED SUCH THAT THE DIAMETER OF THE HOLES IS NOMINALLY 2" LARGER THAN THE PIPE FOR 1" NOMINAL TO 3-1/4" NOMINAL AND 4" LARGER THAN THE PIPE FOR PIPE 4" NOMINAL AND LARGER.

18.4.3 WHERE CLEARANCE IS PROVIDED BY A PIPE SLEEVE, A NOMINAL DIAMETER 2" LARGER THAN THE NOMINAL DIAMETER OF THE PIPE SHALL BE ACCEPTABLE FOR PIPE SIZES 1" THROUGH 3-1/4" AND THE CLEARANCE PROVIDED BY A PIPE SLEEVE OF NOMINAL DIAMETER 4" LARGER THAN THE NOMINAL DIAMETER OF THE PIPE SHALL BE ACCEPTABLE FOR PIPE SIZES 4" AND LARGER.

18.4.4 NO CLEARANCES SHALL BE REQUIRED FOR PIPING PASSING THROUGH GYPSUM BOARD OR EQUALLY FRANGIBLE CONSTRUCTION THAT IS NOT REQUIRED TO HAVE A FIRE RESISTANCE RATING.

18.4.5 NO CLEARANCES SHALL BE REQUIRED IF FLEXIBLE COUPLINGS ARE LOCATED WITHIN 12" OF EACH SIDE OF A WALL, FLOOR, PLATFORM, OR FOUNDATION.

18.4.8 WHERE REQUIRED, THE CLEARANCE SHALL BE FILLED WITH A FLEXIBLE MATERIAL THAT IS COMPATIBLE WITH THE PIPING MATERIAL.

2 PIPE CLEARANCE SCHEDULE
FX502 SCALE: N.T.S.

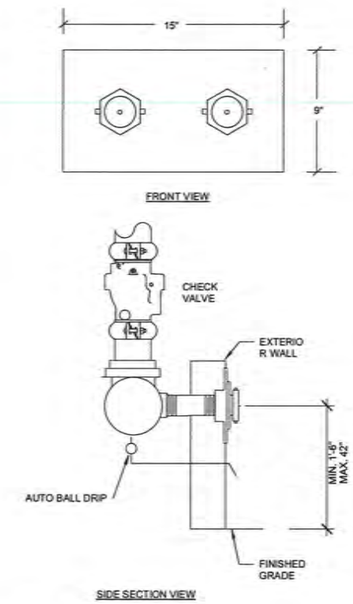

3 FIRE DEPT. CONNECTION DETAIL (2)
FX502 SCALE: N.T.S.

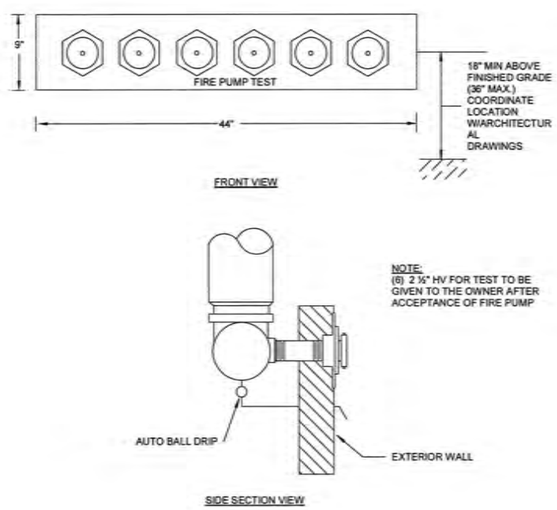

4 PUMP TEST HEADER (6)
FX502 SCALE: N.T.S.

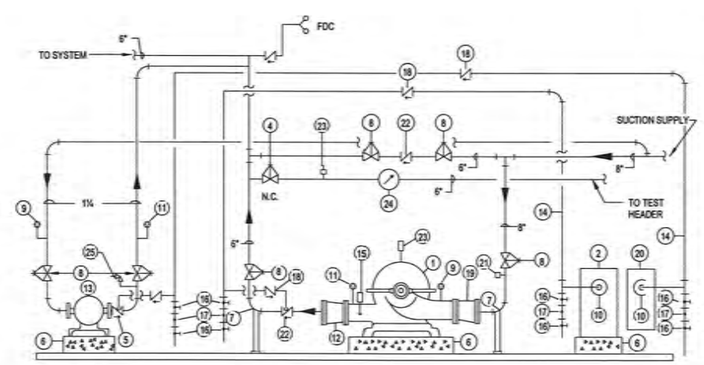

FIRE PUMP CONTROLLER SHALL BE UL LISTED FOR: COMBINATION SERVICE ENTRANCE DISCONNECT SWITCH/ FIRE PUMP CONTROLLER/AUTOMATIC TRANSFER SWITCH. 460 V. 3 PHASE, 4 WIRE GROUNDED NEUTRAL STUD. 100,000A.I.C.

FIRE PUMP EQUIPMENT LIST

1. ELECTRIC FIRE PUMP
2. FIRE PUMP CONTROL PANEL
3. AIR RELIEF VALVE
4. OS & Y GATE VALVE W/ LOCK & CHAIN
5. CHECK VALVE WITH 1/4" CONNECTION
6. CONCRETE BASE MIN 6" HIGH BY G.C.O.
7. SUPPORT ELBOW
8. OS & Y GATE VALVE W/ TAMPER SWITCH
9. SUCTION GAUGE (0-200 P.S.I.)
10. PRESSURE SWITCH
11. DISCHARGE GAUGE (0-350 P.S.I.)
12. 6"x5" INCREASER
13. JOCKEY PUMP
14. 1/2" BRASS PIPE
15. CASING RELIEF VALVE DISCHARGE TO F.D.
16. 1/2" GLOBE VALVE
17. 1/2" X 1/2" X 1/4" PLUGGED TEE
18. BRONZE CHECK VALVE W/ 3/32" ORIFICE IN CLAPPER (MIN. 5'-0" APART)
19. 6"x5" ECCENTRIC DECREASER
20. JOCKEY PUMP CONTROL PANEL
21. LOW SUCTION PRESSURE SWITCH
22. CHECK VALVE
23. AUTOMATIC AIR VENT
24. FLOW METER
25. ADJUSTABLE PRESSURE RELIEF VALVE

5 PIPING ARRANGEMENT AT ELECTRICAL FIRE PUMP
FX502 SCALE: N.T.S.

ISSUED FOR BID - FEBRUARY, 2026

THIS DRAWING PRODUCED ON REVIT
DO NOT REVISE MANUALLY

"THIS DOCUMENT IS THE PROPERTY OF NAVAL FACILITIES ENGINEERING COMMAND, PREPARED BY TETRA TECH ENGINEERING CORPORATION PC, AND IS PROVIDED UPON THE CONDITION THAT IT WILL NOT BE REPRODUCED, COPIED, OR ISSUED TO A THIRD PARTY, AND WILL BE USED SOLELY FOR THE ORIGINAL INTENDED PURPOSE AND SOLELY FOR THE EXECUTION OR REVIEW OF THE ENGINEERING CONSTRUCTION OF THE PROJECT".

IT IS A VIOLATION OF THE NEW YORK STATE EDUCATION LAW, ARTICLE 145, FOR ANY PERSON, UNLESS UNDER THE DIRECTION OF A NEW YORK STATE LICENSED PROFESSIONAL ENGINEER, TO ALTER AN ITEM ON THIS DOCUMENT IN ANY WAY.

SYM	DESCRIPTION	DATE	APPR

NAVFAC

STATE OF NEW YORK · ROCKWOOD J. EDWARDS · 090529 · LICENSED PROFESSIONAL ENGINEER

TETRA TECH
www.tetratech.com
4403 CORPORATION LANE, SUITE 300
VIRGINIA BEACH, VA 23462
PHONE: (757) 461-2788 FAX: (757) 461-4149
HQ: NAFO

APPROVED:
FOR COMMANDER, NAVFAC
ACTIVITY
As per document from Nicole Coward, NAVFAC MIDLANT PIL/EV3
SATISFACTORY TO DATE 4/24/2026
DES RE DRW NM CHK MG
PM/CM
BRANCH MANAGER
CHIEF ENG/ARCH
FIRE PROTECTION

DEPARTMENT OF THE NAVY
NAVAL FACILITIES ENGINEERING COMMAND
NAVAL FACILITIES ENGINEERING SYSTEMS COMMAND ~ MID-ATLANTIC
NAVAL INDUSTRIAL RESERVE ORDNANCE PLANT
NAVAL WEAPONS INDUSTRIAL RESERVE PLANT
BETHPAGE, NEW YORK
PHASE III - GROUNDWATER TREATMENT PLANT
WATER TREATMENT PLANT
FIRE PROTECTION DETAILS

SCALE: AS NOTED
EPROJECT NO.:
CONSTR. CONTR. NO. N62472-99-D-0002
NAVFAC DRAWING NO.
SHEET OF
FX502

DRAWFORM REVISION: 25 AUGUST 2020

FX502
4/22/2026 1:39:24 PM
Autodesk Docs://112508005-WE24 Navy- Bethpage NY Phase III IF-11/2508005_PHASEIII_GWTP_v2023.rvt

NOTIFICATION: THIS PAGE CONTAINS SENSITIVE BUT UNCLASSIFIED INFORMATION WHICH IS PROTECTED BY THE FREEDOM OF INFORMATION ACT

EXEMPTION 3. (5 USC 552(b)(3))

Information exempted by other statutes

10 USC Section 130(e) Treatment of Certain Critical Infrastructure Security Information

Pages 109-111

TO REQUEST A COPY OF THE DOCUMENT PLEASE CONTACT

Department of the Navy
Freedom of Information Act Office

http://www.secnav.navy.mil/foia/Pages/default.aspx

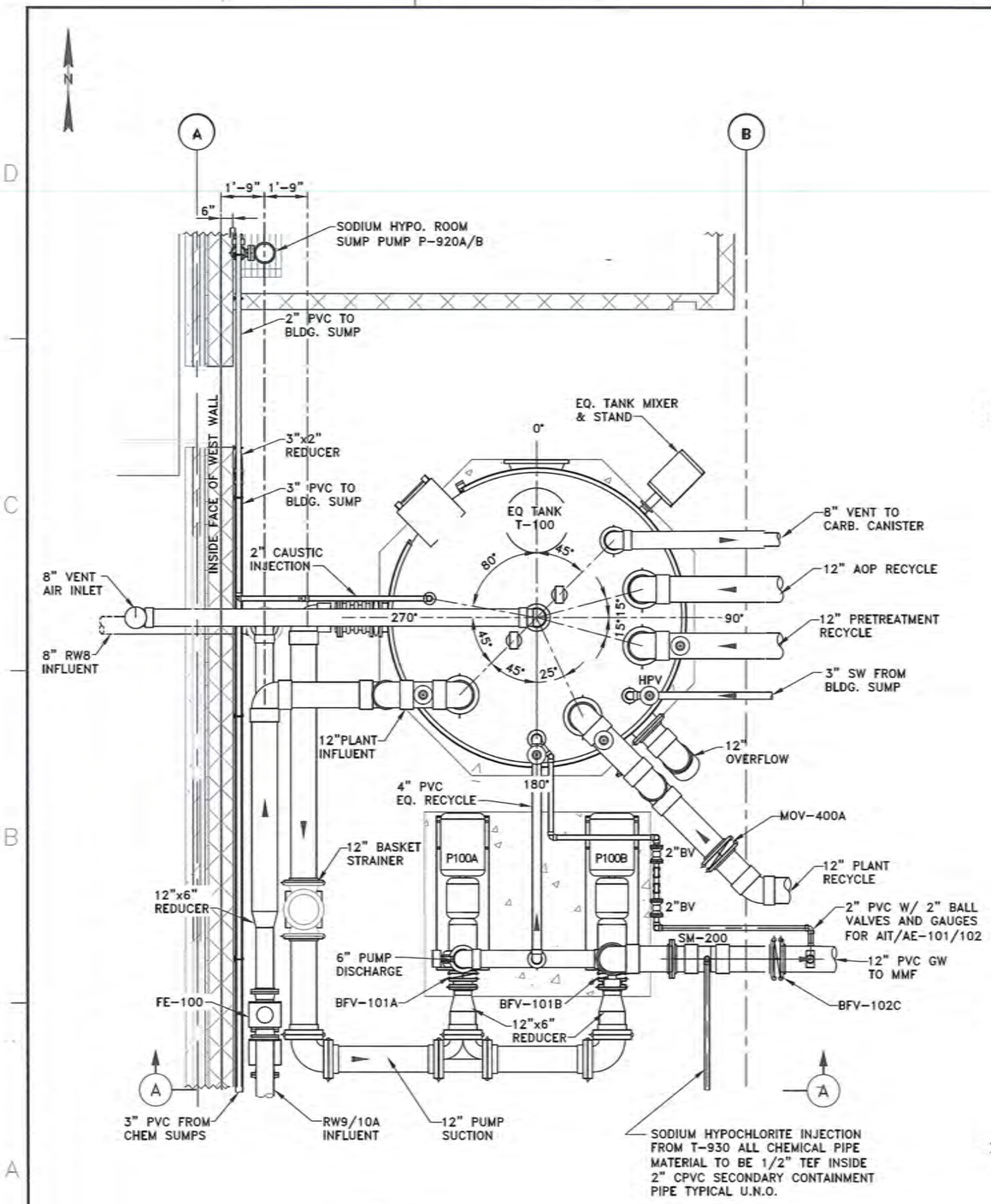

PLAN
SCALE 3/16" = 1'-0"

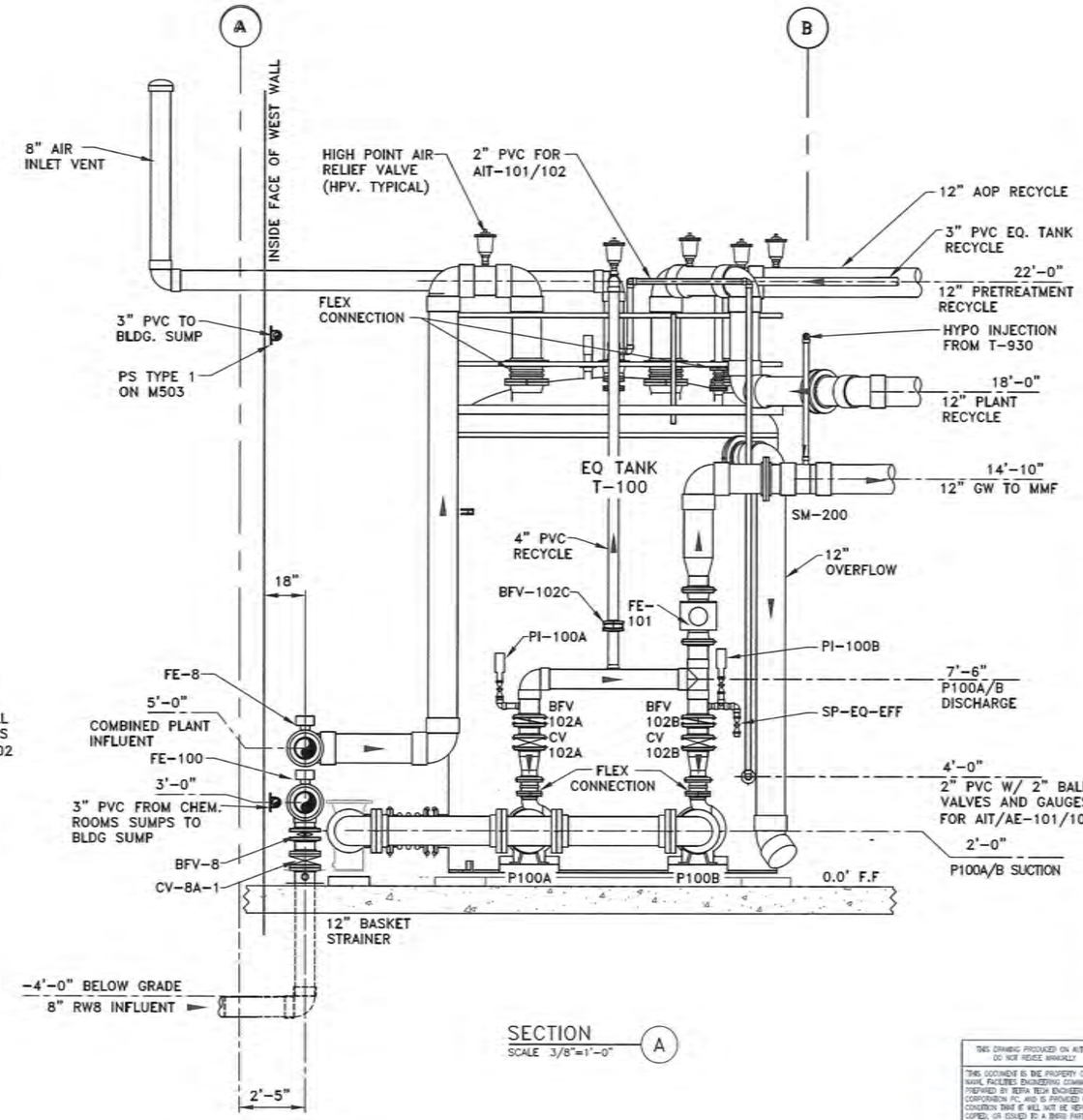

SECTION A
SCALE 3/8"=1'-0"

THIS DRAWING PRODUCED ON AUTOCAD DO NOT REVISE MANUALLY

THIS DOCUMENT IS THE PROPERTY OF NAVAL FACILITIES ENGINEERING COMMAND, PREPARED BY TETRA TECH ENGINEERING CORPORATION PC, AND IS PROVIDED UPON THE CONDITION THAT IT WILL NOT BE REPRODUCED, COPIED, OR ISSUED TO A THIRD PARTY, AND WILL BE USED SOLELY FOR THE ORIGINAL INTENDED PURPOSE AND SOLELY FOR THE EXECUTION OR REVIEW OF THE ENGINEERING CONSTRUCTION OF THE PROJECT.

IT IS A VIOLATION OF THE NEW YORK STATE EDUCATION LAW, ARTICLE 145, FOR ANY PERSON UNLESS UNDER THE DIRECTION OF A NEW YORK STATE LICENSED PROFESSIONAL ENGINEER, TO ALTER AN ITEM ON THIS DOCUMENT IN ANY WAY.

NAVFAC

STATE OF NEW YORK — DAVID DANIEL BASTICK — 080334 — LICENSED PROFESSIONAL ENGINEER

TETRA TECH
4400 CORPORATION LANE, SUITE 300
VIRGINIA BEACH, VA 23462
PHONE: (757) 461-2268 FAX: (757) 461-4148
A/E INFO

APPROVED
FOR COMMANDER NAVFAC

ACTION
As per document from Nicole Coward NAVFAC. MIDLANT PLL/EV3

SUBMITTED TO DATE 03/24/2026

DES HKM	DRW KW	CHK HKM
PM/DM		-
BRANCH MANAGER		--
CHIEF ENG/ARCH		-
FIRE PROTECTION		-

NAVAL FACILITIES ENGINEERING SYSTEMS COMMAND - MID - ATLANTIC
NAVAL INDUSTRIAL RESERVE ORDNANCE PLANT
NAVAL WEAPONS INDUSTRIAL RESERVE PLANT BETHPAGE, NEW YORK
PHASE III - TREATMENT PLANT
EQ TANK & PUMPS ENLARGED PLAN AND SECTIONS

CAGE

SCALE: AS NOTED
EPROJECT NO.: -
CONSTR. CONTR. NO. 112G08005
NAVFAC DRAWING NO. ##
SHEET OF -

M-103

ISSUED FOR BID FEB., 2026

CAUTION: SHEET IS LESS THAN 34"x22" USE GRAPHIC SCALE

:\Projects\Phase -3\Drawings\Mech\General Arrangment.dwg, 4/22/2026 4:14:20 PM, Adobe BW PDF.pc3

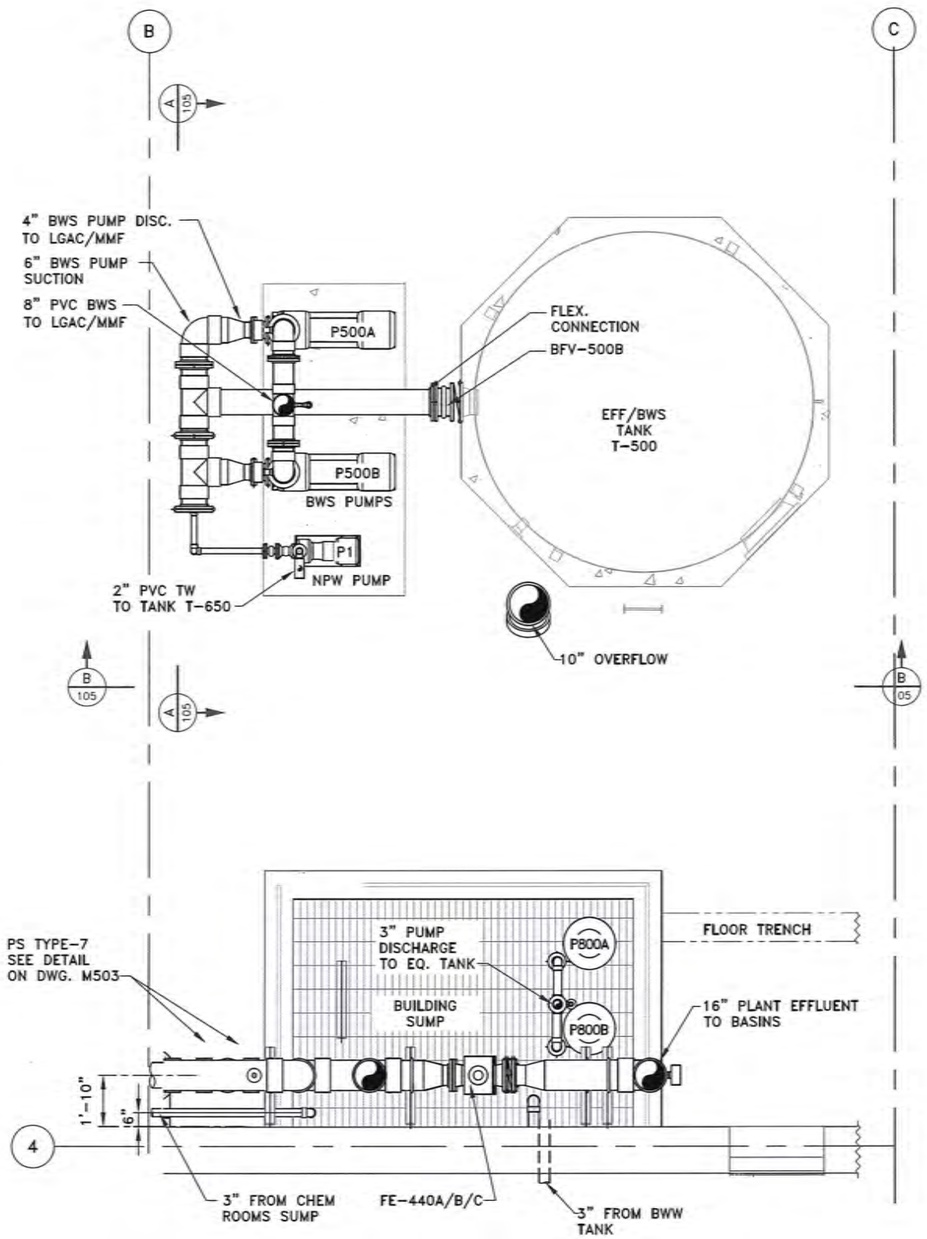

BWS TANK PLAN @ F.F TO 10ft ABOVE F.F

SCALE 3/8"=1'-0"

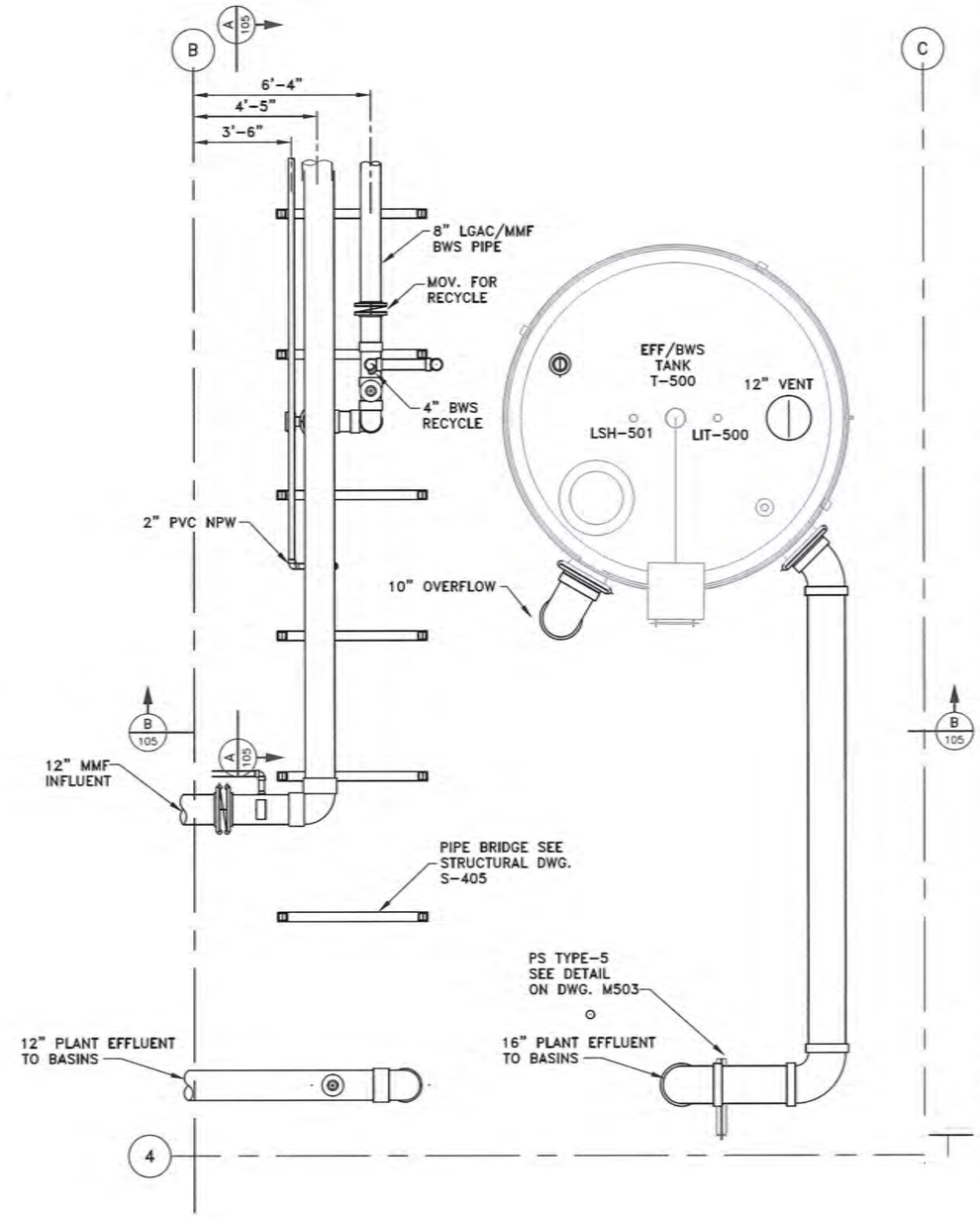

BWS TANK PLAN @ 14' AFF

SCALE 3/8"=1'-0"

ISSUED FOR BID FEB., 2026

THIS DRAWING PRODUCED ON AUTOCAD DO NOT REVISE MANUALLY

THIS DOCUMENT IS THE PROPERTY OF NAVAL FACILITIES ENGINEERING COMMAND, PREPARED BY TETRA TECH ENGINEERING CORPORATION PC, AND IS PROVIDED UPON THE CONDITION THAT IT WILL NOT BE REPRODUCED, COPIED, OR ISSUED TO A THIRD PARTY, AND WILL BE USED SOLELY FOR THE ORIGINAL INTENDED PURPOSE AND SOLELY FOR THE EXECUTION OR REVIEW OF THE ENGINEERING CONSTRUCTION OF THE PROJECT.

IT IS A VIOLATION OF THE NEW YORK STATE EDUCATION LAW, ARTICLE 145, FOR ANY PERSON, UNLESS UNDER THE DIRECTION OF A NEW YORK STATE LICENSED PROFESSIONAL ENGINEER, TO ALTER AN ITEM ON THIS DOCUMENT IN ANY WAY.

NAVFAC

STATE OF NEW YORK — DAVID DANIEL BURACK — 080336 — LICENSED PROFESSIONAL ENGINEER

TETRA TECH

www.tetratech.com
4653 CORPORATION LANE, SUITE 300
VIRGINIA BEACH, VA 23462
PHONE: (757) 461-3768 FAX: (757) 461-1448
A/E INFO

APPROVED

FOR COMMANDER NAVFAC

ACTIVITY
As per document from Nicole Coward
NAVFAC, MIDLANT PLL/EV3

SUBMITTED TO DATE 03/24/2026

DES HKM DRW KW CHK HKM

PM/CM

BRANCH MANAGER

CHIEF ENG/ARCHI

FIRE PROTECTION

NAVAL FACILITIES ENGINEERING SYSTEMS COMMAND - MID - ATLANTIC
NAVAL INDUSTRIAL RESERVE ORDNANCE PLANT
NAVAL WEAPONS INDUSTRIAL RESERVE PLANT BETHPAGE, NEW YORK
PHASE III - TREATMENT PLANT

BWS TANK & PUMPS ENLARGED PLAN AND SECTIONS

SCALE: AS NOTED

EPROJECT NO.: -

CONSTR. CONTR. NO. 112G08005

NAVFAC DRAWING NO. ##

SHEET OF -

M-104

CAUTION: IF SHEET IS LESS THAN 34"x22" USE GRAPHIC SCALE

:\Projects\Phase -3\Drawings\Mech\General Arrangment.dwg, 4/22/2026 3:24:03 PM, Adobe BW PDF.pc3

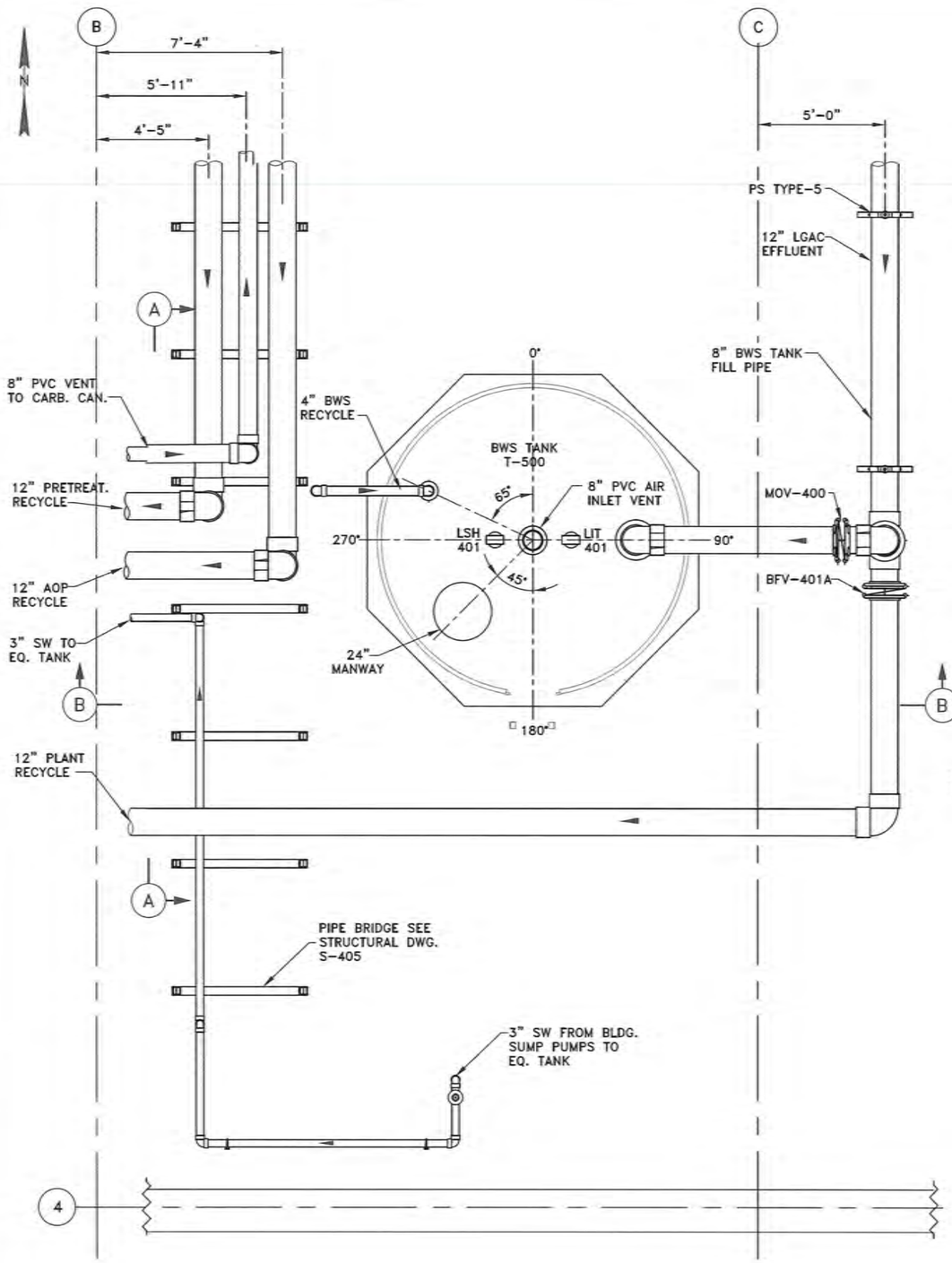

BWS TANK PLAN @ 17ft AFF
SCALE 3/8"=1'-0"

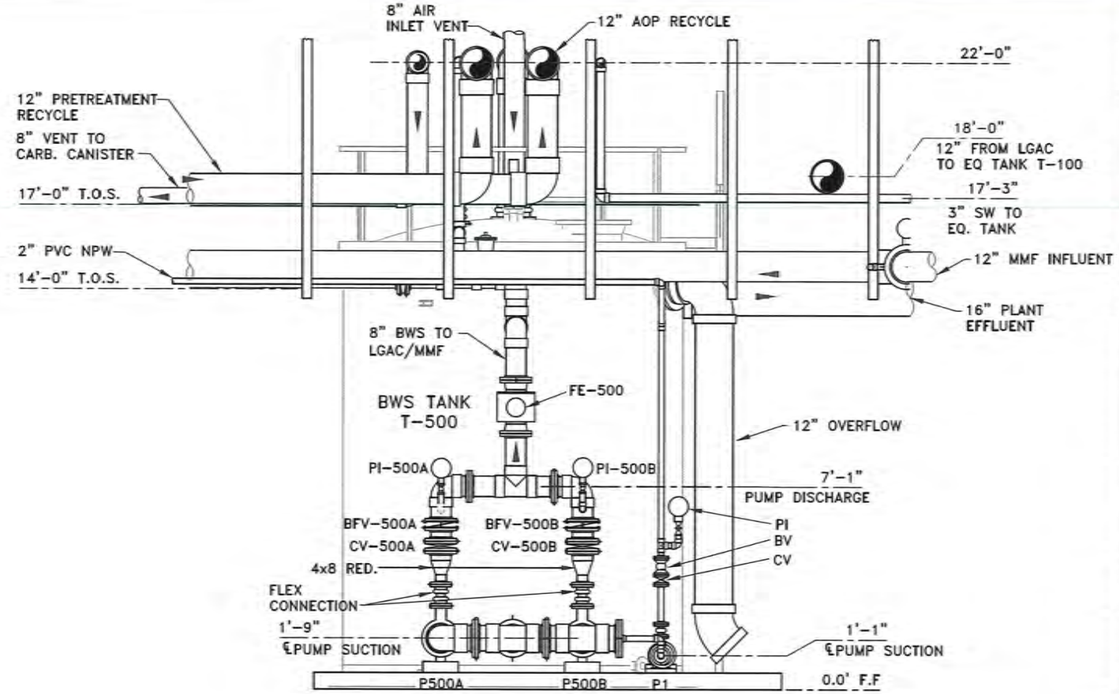

VIEW A
SCALE 3/8"=1'-0"

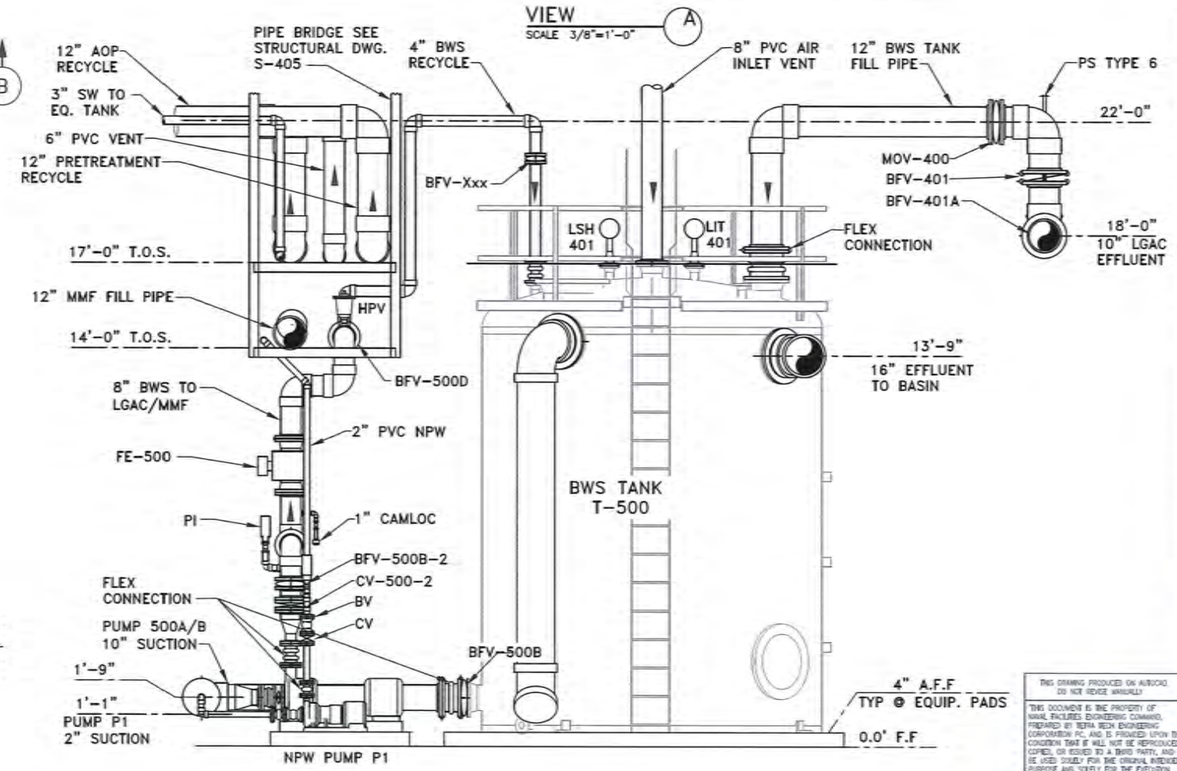

VIEW B
SCALE 3/8"=1'-0"

ISSUED FOR BID FEB., 2026

CAUTION: IF SHEET IS LESS THAN 24"x36" USE GRAPHIC SCALE

THIS DRAWING PRODUCED ON AUTOCAD
DO NOT REVISE MANUALLY

THIS DOCUMENT IS THE PROPERTY OF NAVAL FACILITIES ENGINEERING COMMAND, PREPARED BY TETRA TECH ENGINEERING CORPORATION PC, AND IS PROVIDED UPON THE CONDITION THAT IT WILL NOT BE REPRODUCED, COPIED, OR ISSUED TO A THIRD PARTY, AND WILL BE USED SOLELY FOR THE ORIGINAL INTENDED PURPOSE AND SOLELY FOR THE EVALUATION OR REVIEW OF THE ENGINEERING CONSTRUCTION OF THE PROJECT.

IT IS A VIOLATION OF THE NEW YORK STATE EDUCATION LAW, ARTICLE 145, FOR ANY PERSON, UNLESS UNDER THE DIRECTION OF A NEW YORK STATE LICENSED PROFESSIONAL ENGINEER, TO ALTER AN ITEM ON THIS DOCUMENT IN ANY WAY.

NAVFAC

STATE OF NEW YORK
DAVID DANIEL BURGESS
080336
LICENSED PROFESSIONAL ENGINEER

TETRA TECH
www.tetratech.com
4423 CORPORATION LANE, SUITE 305
VIRGINIA BEACH, VA 23462
PHONE: (757) 461-3788 FAX: (757) 461-4148
A/E INFO

APPROVED
FOR COMMANDER NAVFAC

ACTIVITY
As per document from Nicole Goward NAVFAC. MIDLANT PLL/EV3

SUBMITTED TO | DATE 03/24/2026
DES HKM | DRW KW | CHK HKM
PM/CM
BRANCH MANAGER
CHIEF ENG/ARCH
FIRE PROTECTION

NAVAL FACILITIES ENGINEERING SYSTEMS COMMAND - MID - ATLANTIC
NAVAL INDUSTRIAL RESERVE ORDNANCE PLANT
NAVAL WEAPONS INDUSTRIAL RESERVE PLANT BETHPAGE, NEW YORK
PHASE III - TREATMENT PLANT
BWS TANK & PUMPS ENLARGED PLAN AND SECTIONS

SCALE: AS NOTED
EPROJECT NO.:
CONSTR. CONTR. NO.
112G0B005
NAVFAC DRAWING NO.
##
SHEET OF
M-105

:\Projects\Phase -3\Drawings\Mech\General Arrangment.dwg, 4/22/2026 4:14:54 PM, Adobe BW PDF.pc3

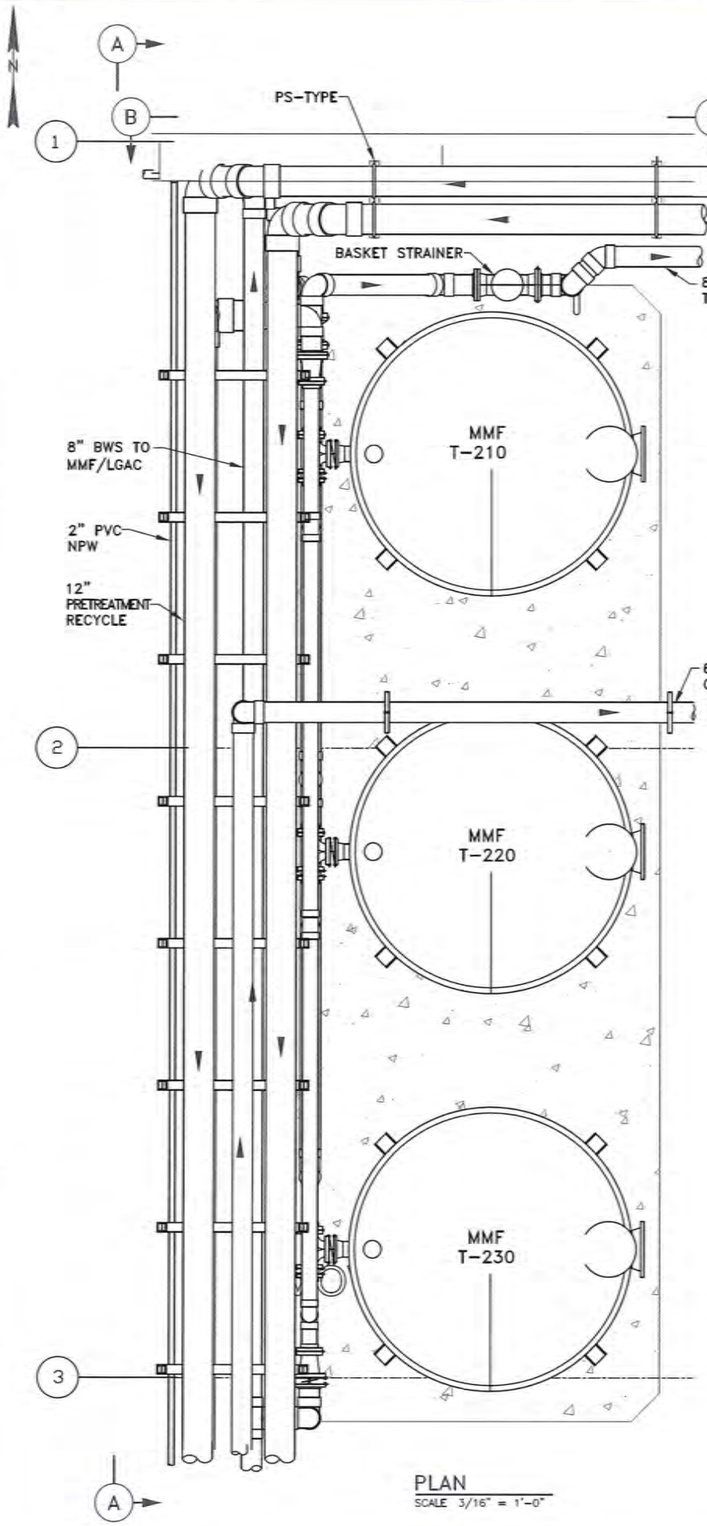

PLAN
SCALE 3/16" = 1'-0"

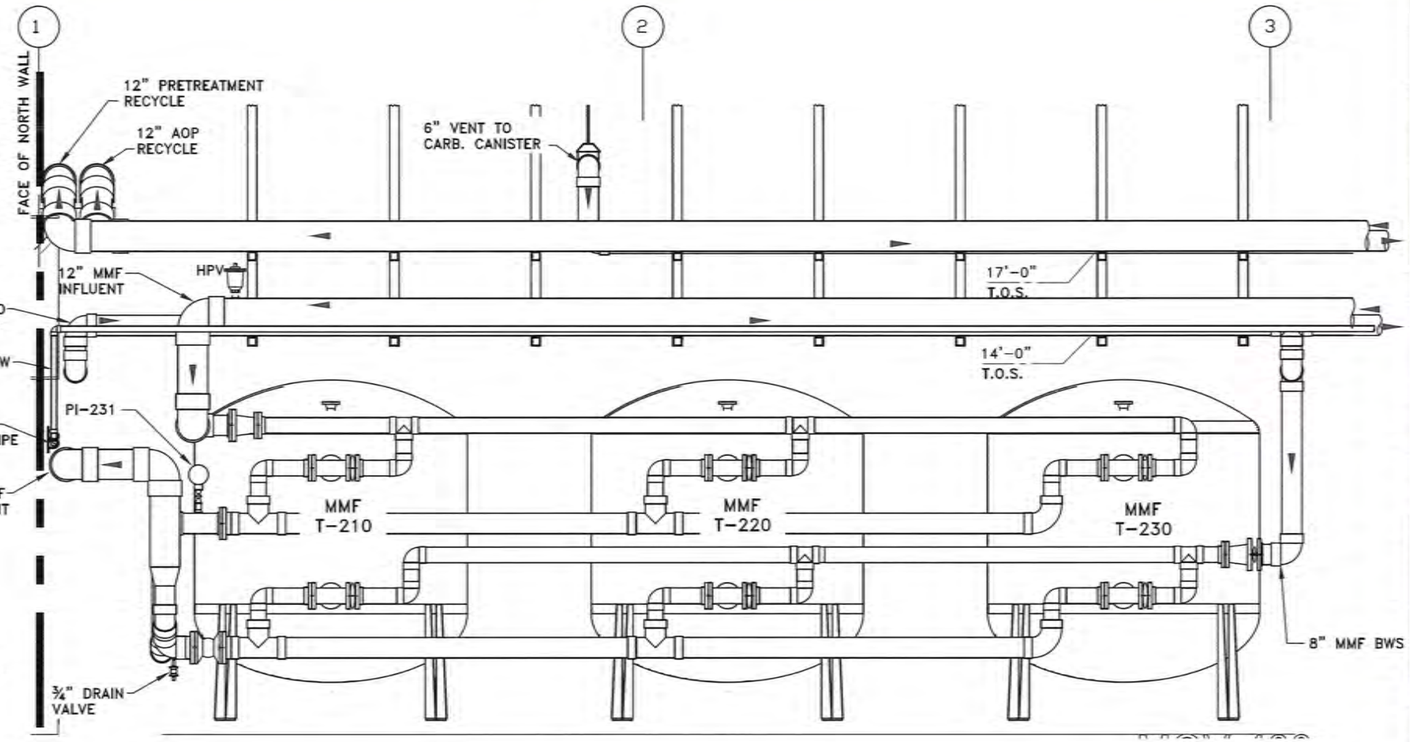

VIEW A
SCALE 3/8"=1'-0"

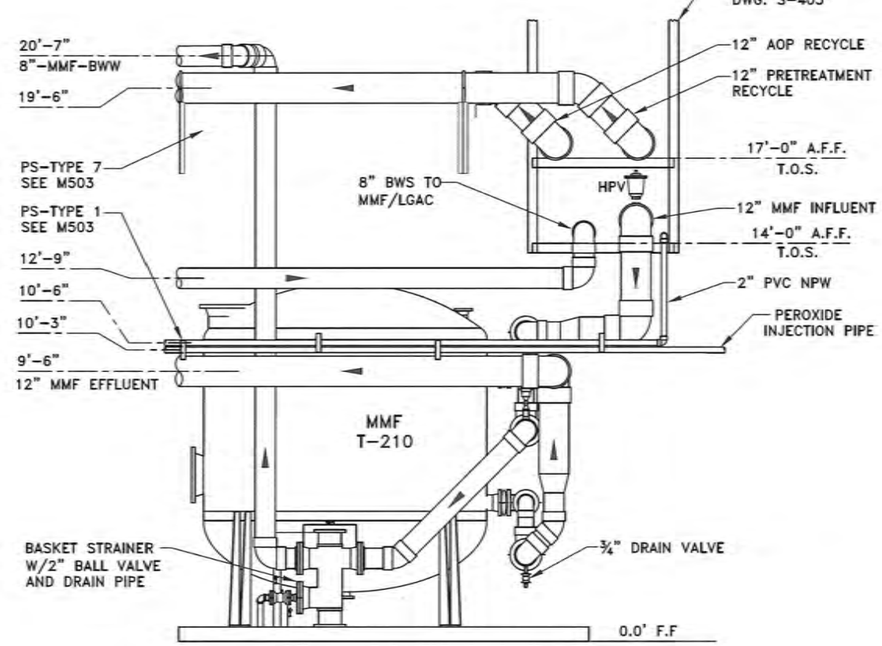

VIEW B
SCALE 3/8"=1'-0"

ISSUED FOR BID FEB., 2026

THIS DRAWING PRODUCED ON AUTOCAD DO NOT REVISE MANUALLY

"THIS DOCUMENT IS THE PROPERTY OF NAVAL FACILITIES ENGINEERING COMMAND, PREPARED BY TERRA TECH ENGINEERING CORPORATION PC, AND IS PROVIDED UPON THE CONDITION THAT IT WILL NOT BE REPRODUCED, COPIED, OR ISSUED TO A THIRD PARTY, AND WILL BE USED SOLELY FOR THE ORIGINAL INTENDED PURPOSE AND SOLELY FOR THE EXECUTION OR REVIEW OF THE ENGINEERING CONSTRUCTION OF THE PROJECT.

IT IS A VIOLATION OF THE NEW YORK STATE EDUCATION LAW, ARTICLE 145, FOR ANY PERSONS UNLESS UNDER THE DIRECTION OF A NEW YORK STATE LICENSED PROFESSIONAL ENGINEER, TO ALTER AN ITEM ON THIS DOCUMENT IN ANY WAY.

NAVFAC

STATE OF NEW YORK · DAVID DANIEL BARACK · 080336 · LICENSED PROFESSIONAL ENGINEER

TETRA TECH
www.tetratech.com
4430 CORPORATION LANE, SUITE 300
VIRGINIA BEACH, VA 23462
PHONE: (757) 461-3768 FAX: (757) 461-4148
A/E INFO

APPROVED
FOR COMMANDER NAVFAC 4/22/2026

ACTIVITY
As per document from Nicole Coward NAVFAC, MIDLANT PLL/EV3

SUBSIDIARY TO DATE 03/24/2026

DES HKM | DRW KW | CHK HKM

PM/CM
BRANCH MANAGER
CHIEF ENG/ARCH
FIRE PROTECTION

GMUSI

NAVAL FACILITIES ENGINEERING SYSTEMS COMMAND - MID - ATLANTIC
NAVAL INDUSTRIAL RESERVE ORDNANCE PLANT
NAVAL WEAPONS INDUSTRIAL RESERVE PLANT BETHPAGE, NEW YORK
PHASE III - TREATMENT PLANT
MMF TANKS T-210, 220, 230 ENLARGED PLAN & SECTIONS

SCALE: AS NOTED
EPROJECT NO.:
CONSTR. CONTR. NO. 112G08005
NAVFAC DRAWING NO. ##
SHEET OF
M-106

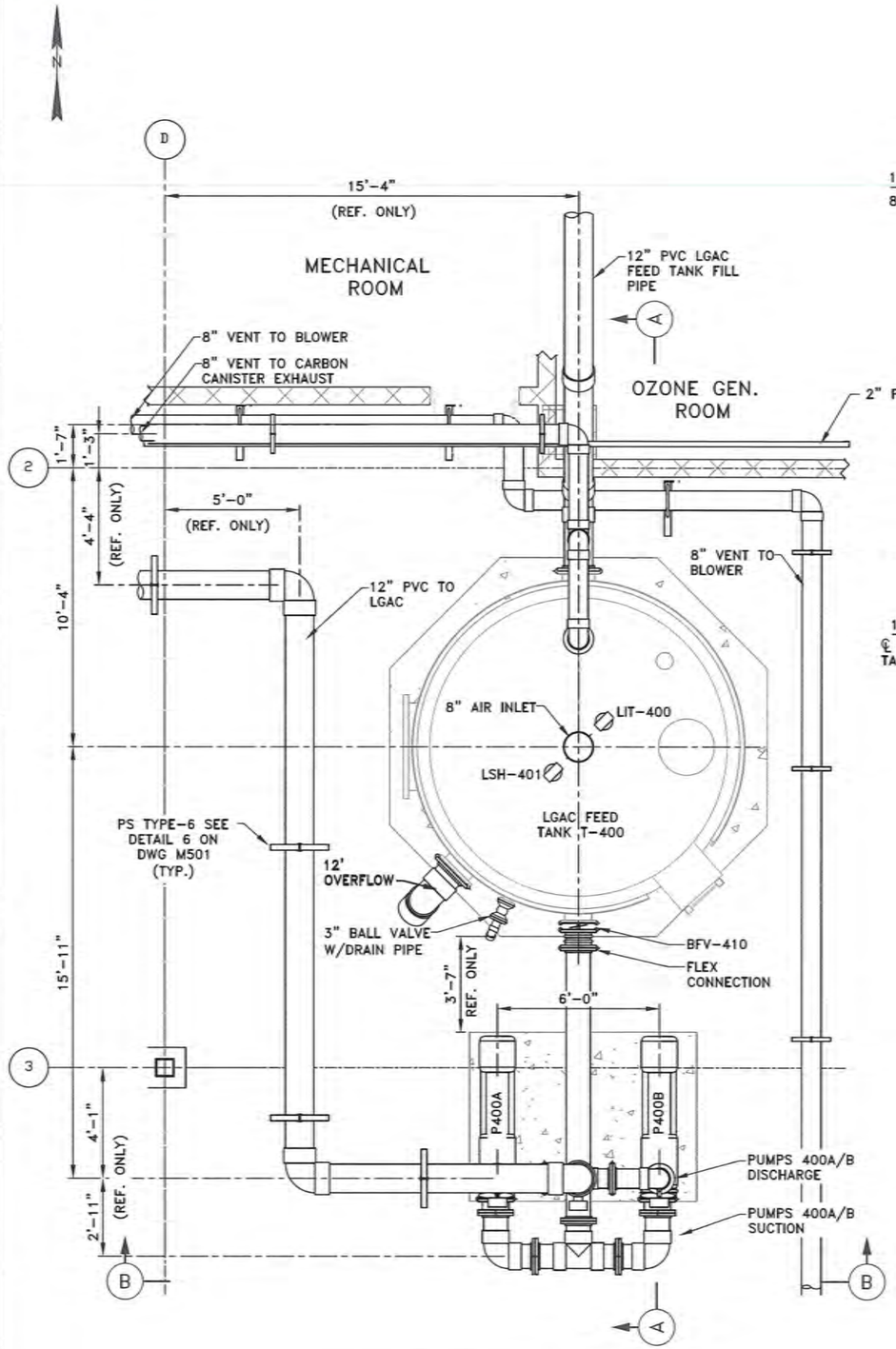

PLAN
SCALE 3/16" = 1'-0"

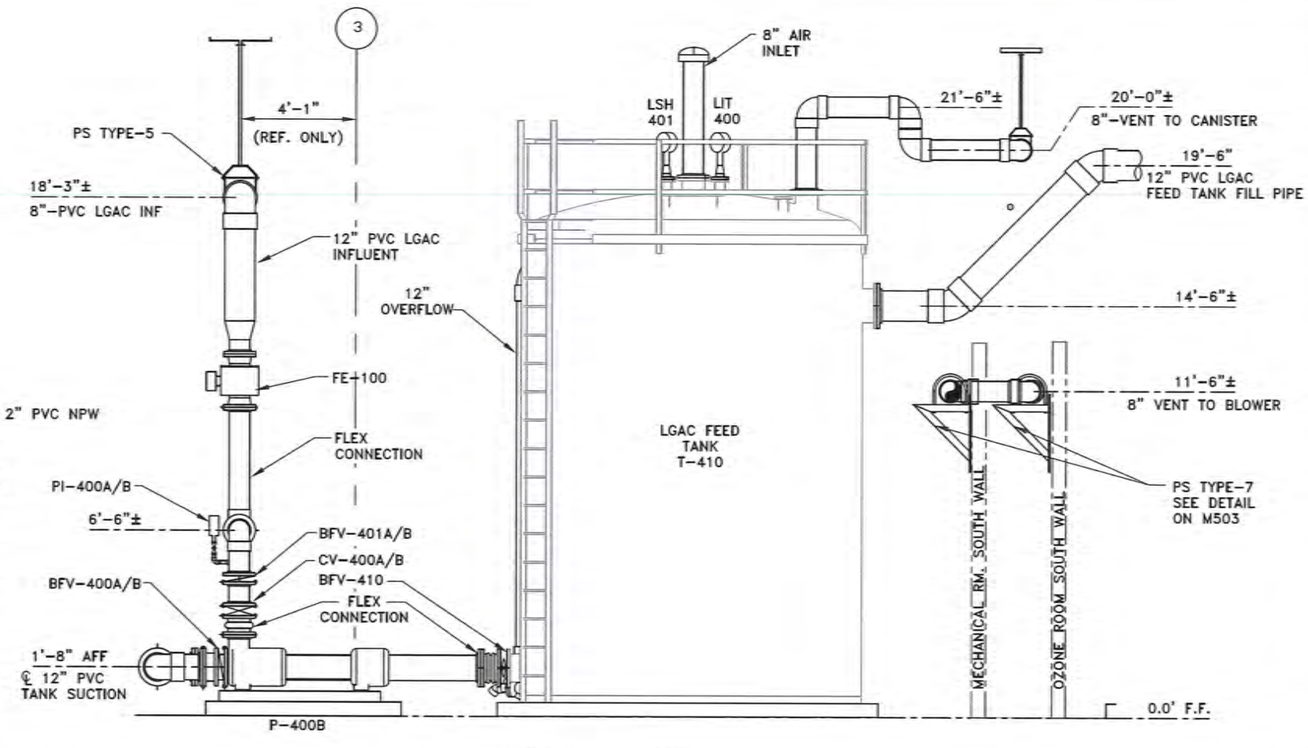

SECTION A
SCALE 3/8"=1'-0"

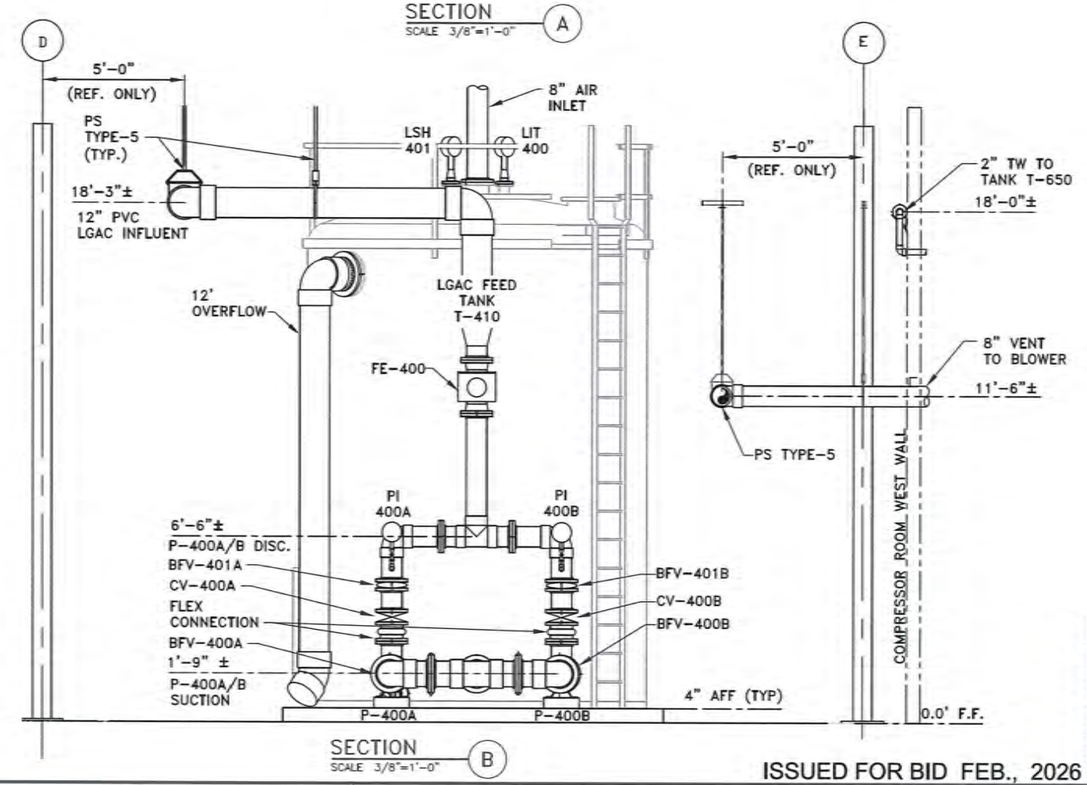

SECTION B
SCALE 3/8"=1'-0"

ISSUED FOR BID FEB., 2026

THIS DRAWING PRODUCED ON AUTOCAD DO NOT REVISE MANUALLY

"THIS DOCUMENT IS THE PROPERTY OF NAVAL FACILITIES ENGINEERING COMMAND, PREPARED BY TETRA TECH ENGINEERING CORPORATION PC, AND IS PROVIDED UPON THE CONDITION THAT IT WILL NOT BE REPRODUCED, COPIED, OR ISSUED TO A THIRD PARTY, AND WILL BE USED SOLELY FOR THE ORIGINAL INTENDED PURPOSE AND SOLELY FOR THE EXECUTION OR REVIEW OF THE ENGINEERING CONSTRUCTION OF THE PROJECT."

IT IS A VIOLATION OF THE NEW YORK STATE EDUCATION LAW, ARTICLE 145, FOR ANY PERSON, UNLESS UNDER THE DIRECTION OF A NEW YORK STATE LICENSED PROFESSIONAL ENGINEER, TO ALTER AN ITEM ON THIS DOCUMENT IN ANY WAY.

NAVFAC

STATE OF NEW YORK
RICHARD DANIEL BARACK
080336
LICENSED PROFESSIONAL ENGINEER

TETRA TECH
www.tetratech.com
4435 CORPORATION LANE, SUITE 300
VIRGINIA BEACH, VA 23462
PHONE: (757) 461-2268 FAX: (757) 461-1448
A/E INFO

APPROVED
FOR COMMANDER NAVFAC

ACTIVITY
As per document from Nicole Gowand NAVFAC, MIDLANT PLL/EV3

SUBSIDIARY TO DATE 03/24/2026
DES HKM DRW KW CHK HKM
PM/DM
BRANCH MANAGER
CHIEF ENG/ARCH
FIRE PROTECTION

NAVAL FACILITIES ENGINEERING SYSTEMS COMMAND - MID - ATLANTIC
NAVAL INDUSTRIAL RESERVE ORDNANCE PLANT
NAVAL WEAPONS INDUSTRIAL RESERVE PLANT BETHPAGE, NEW YORK
PHASE III - TREATMENT PLANT
LGAC FEED TANK & PUMPS ENLARGED PLAN & SECTIONS

SCALE: AS NOTED
EPROJECT NO.: -
CONTR. CONTR. NO. 112G08005
NAVFAC DRAWING NO. ##
SHEET OF -

M-107

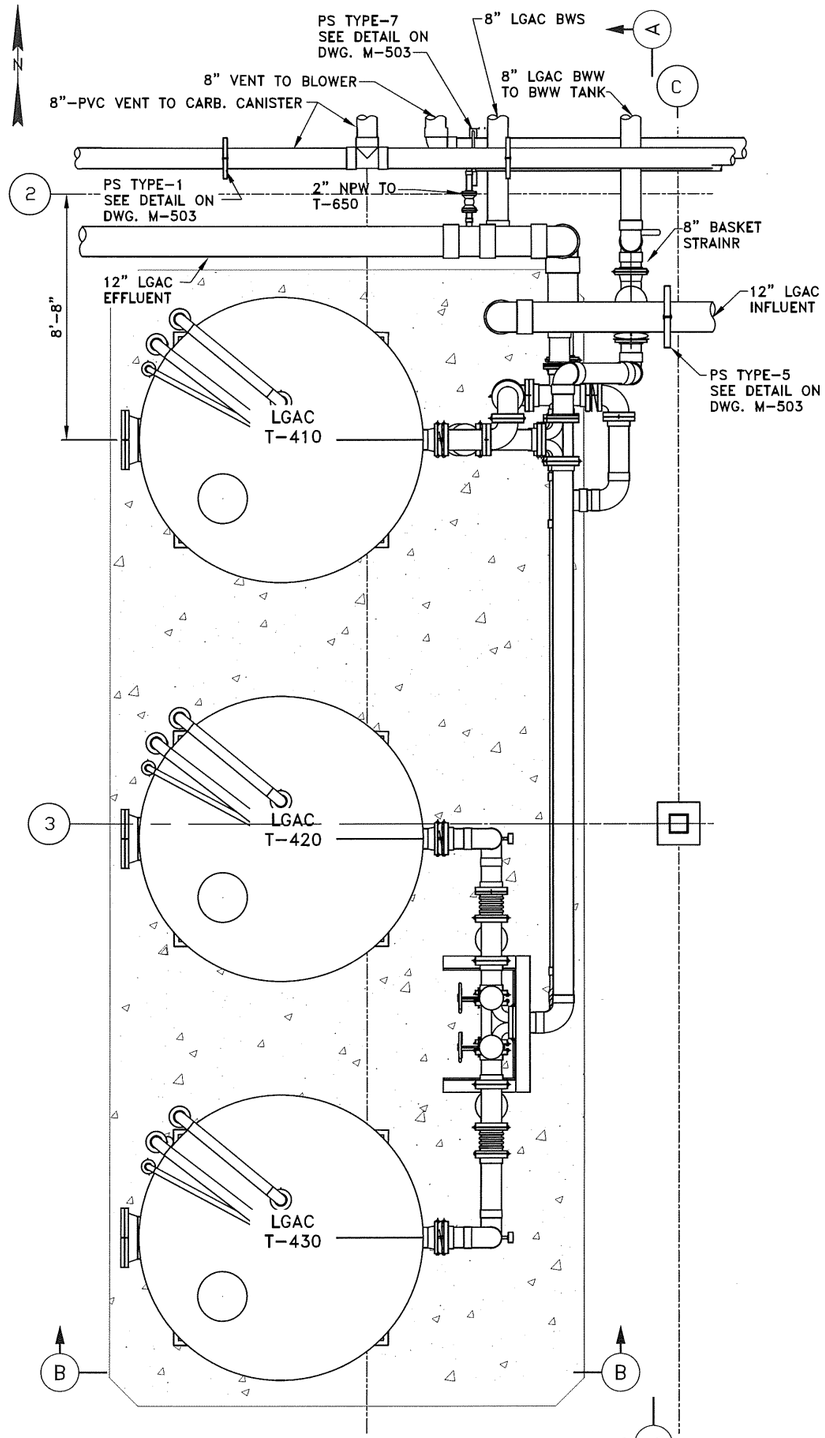

PLAN
SCALE 3/16" = 1'-0"

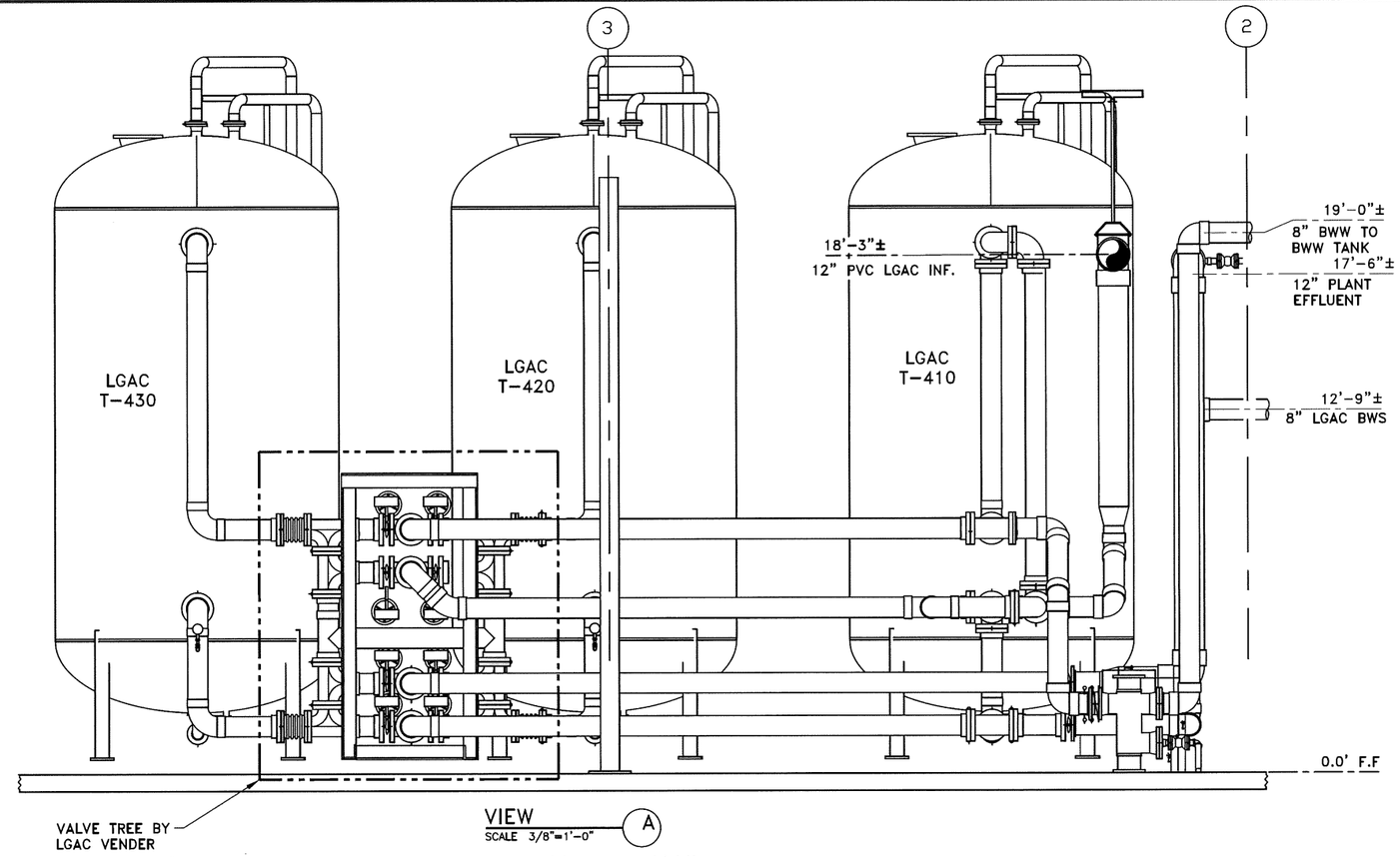

VIEW A
SCALE 3/8"=1'-0"

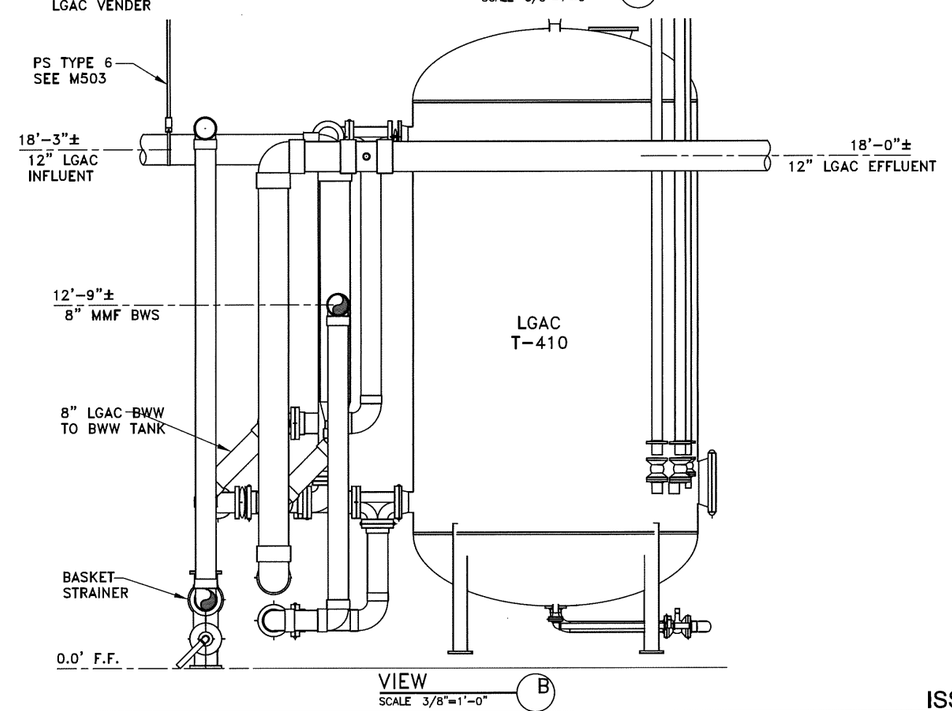

VIEW B
SCALE 3/8"=1'-0"

ISSUED FOR BID FEB., 2026

THIS DRAWING PRODUCED ON AUTOCAD
DO NOT REVISE MANUALLY

"THIS DOCUMENT IS THE PROPERTY OF NAVAL FACILITIES ENGINEERING COMMAND, PREPARED BY TETRA TECH ENGINEERING CORPORATION P.C. AND IS PROVIDED UPON THE CONDITION THAT IT WILL NOT BE REPRODUCED, COPIED, OR ISSUED TO A THIRD PARTY, AND WILL BE USED SOLELY FOR THE ORIGINAL INTENDED PURPOSE AND SOLELY FOR THE EXECUTION OR REVIEW OF THE ENGINEERING CONSTRUCTION OF THE PROJECT".

IT IS A VIOLATION OF THE NEW YORK STATE EDUCATION LAW, ARTICLE 145, FOR ANY PERSON, UNLESS UNDER THE DIRECTION OF A NEW YORK STATE LICENSED PROFESSIONAL ENGINEER, TO ALTER AN ITEM ON THIS DOCUMENT IN ANY WAY.

NAVFAC

STATE OF NEW YORK
DAVID DANIEL BEAPAT
080336
LICENSED PROFESSIONAL ENGINEER
SEAL

TETRA TECH
www.tetratech.com
4433 CORPORATION LANE, SUITE 300
VIRGINIA BEACH, VA 23462
PHONE: (757) 461-3768 FAX: (757) 461-4148
A/E INFO

APPROVED
FOR COMMANDER NAVFAC
ACTIVITY
As per document from Nicole Coward
NAVFAC. MIDLANT PLL/EV3
SATISFACTORY TO DATE 03/24/2026

DES	HKM	DRW	KW	CHK	HKM

PM/CM ..
BRANCH MANAGER --
CHIEF ENG/ARCH ..
FIRE PROTECTION .

NAVAL FACILITIES ENGINEERING SYSTEMS COMMAND - MID - ATLANTIC
NAVAL INDUSTRIAL RESERVE ORDNANCE PLANT
CM38
NAVAL WEAPONS INDUSTRIAL RESERVE PLANT BETHPAGE, NEW YORK
PHASE III - TREATMENT PLANT
LGAC TANKS T-410, 420, 430 ENLARGED PLAN & SECTIONS

SCALE: AS NOTED
EPROJECT NO.: -
CONSTR. CONTR. NO. 112G08005
NAVFAC DRAWING NO. ##
SHEET OF
M-108

CAUTION: IF SHEET IS LESS THAN 34"x22" USE GRAPHIC SCALE

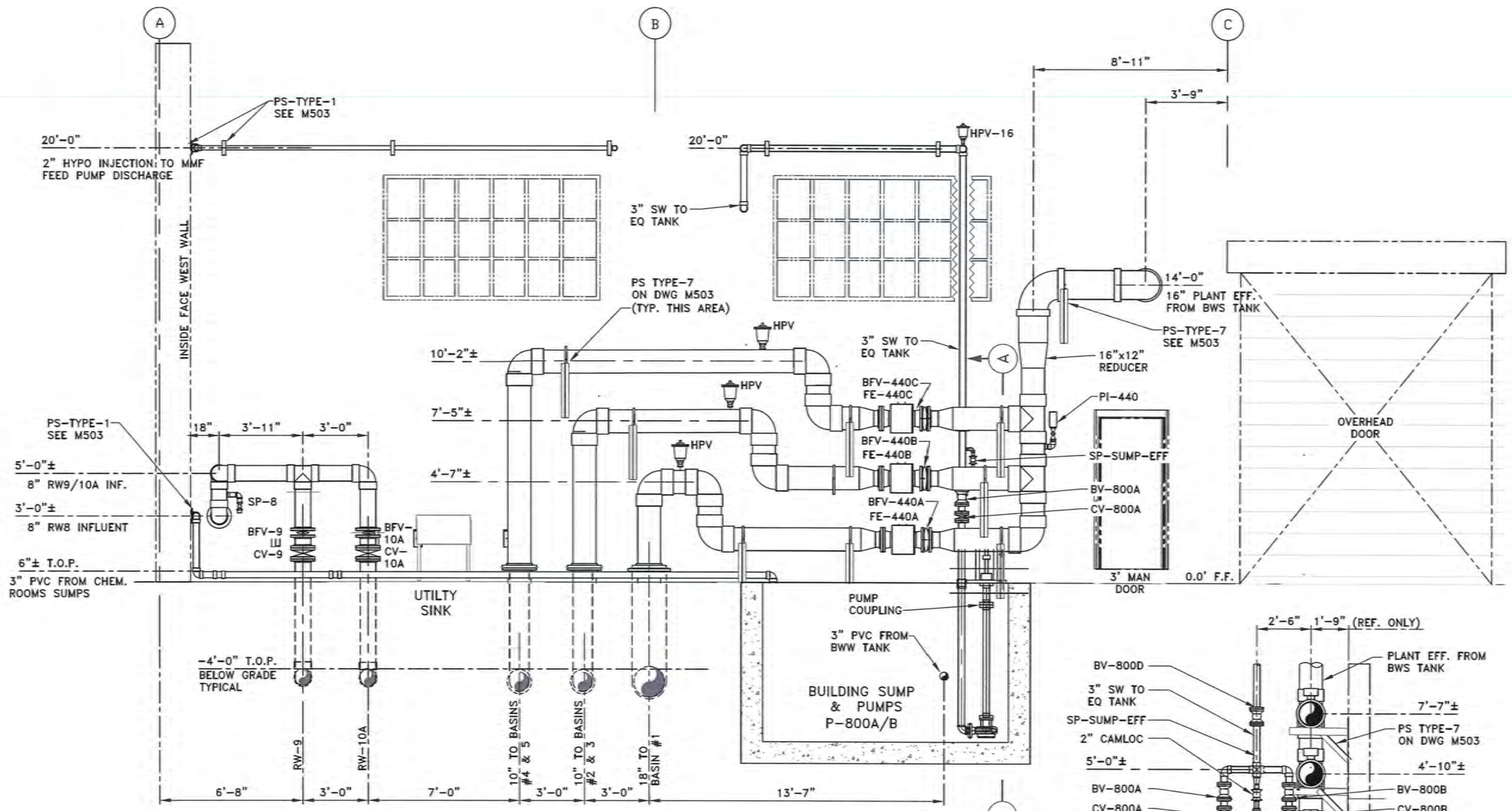

ELEVATION @ SOUTH WALL (1/109)
SCALE 3/8"=1'-0"

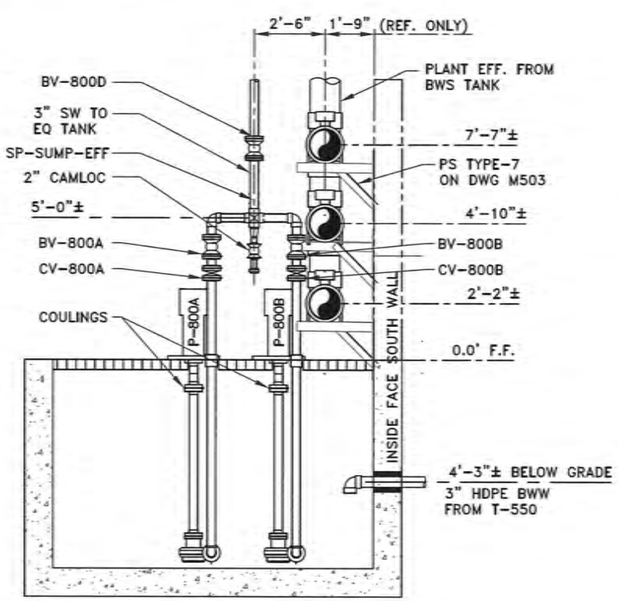

VIEW-A
SCALE 3/8"=1'-0"

ISSUED FOR BID FEB., 2026

THIS DRAWING PRODUCED ON AUTOCAD
DO NOT MODIFY MANUALLY

"THIS DOCUMENT IS THE PROPERTY OF NAVAL FACILITIES ENGINEERING COMMAND, PREPARED BY TETRA TECH ENGINEERING CORPORATION PC, AND IS PROVIDED UPON THE CONDITION THAT IT WILL NOT BE REPRODUCED, COPIED, OR ISSUED TO A THIRD PARTY, AND WILL BE USED SOLELY FOR THE ORIGINAL INTENDED PURPOSE AND SOLELY FOR THE EXECUTION OF REVIEW OF THE ENGINEERING CONSTRUCTION OF THE PROJECT."

IT IS A VIOLATION OF THE NEW YORK STATE EDUCATION LAW, ARTICLE 145, FOR ANY PERSON, UNLESS UNDER THE DIRECTION OF A NEW YORK STATE LICENSED PROFESSIONAL ENGINEER, TO ALTER AN ITEM ON THIS DOCUMENT IN ANY WAY.

CAUTION: IF SHEET IS LESS THAN 34"x22" USE GRAPHIC SCALE

NAVFAC

STATE OF NEW YORK
JOHN DANIEL BURACK
080336
LICENSED PROFESSIONAL ENGINEER

TETRA TECH
www.tetratech.com
4420 CORPORATION LANE, SUITE 300
VIRGINIA BEACH, VA 23462
PHONE: (757) 490-3768 FAX: (757) 490-4148
A/E INFO

APPROVED
FOR COMMANDER NAVFAC

ACTIVITY
As per document from Nicole Coward
NAVFAC, MIDLANT PLL/EV3

SATISFACTORY TO DATE 03/24/2026

DES	HKM	DRW	KW	CHK	HKM

PM/CM
BRANCH MANAGER
CHIEF ENG/ARCH
FIRE PROTECTION

NAVAL FACILITIES ENGINEERING SYSTEMS COMMAND - MID - ATLANTIC
NAVAL WEAPONS INDUSTRIAL RESERVE PLANT BETHPAGE, NEW YORK
NAVAL INDUSTRIAL RESERVE ORDNANCE PLANT

PHASE III - TREATMENT PLANT

TREATMENT PLANT INFLUENT & EFFLUENT MANIFOLDS

SCALE: AS NOTED
EPROJECT NO.:
CONSTR. CONTR. NO. 112G08005
NAVFAC DRAWING NO. ##
SHEET OF

M-109

:\Projects\Phase -3\Drawings\Mech\General Arrangment.dwg, 4/22/2026 3:27:33 PM, Adobe BW PDF.pc3

NOTIFICATION: THIS PAGE CONTAINS SENSITIVE BUT UNCLASSIFIED INFORMATION WHICH IS PROTECTED BY THE FREEDOM OF INFORMATION ACT

EXEMPTION 3. (5 USC 552(b)(3))

Information exempted by other statutes

10 USC Section 130(e) Treatment of Certain Critical Infrastructure Security Information

Page 119

TO REQUEST A COPY OF THE DOCUMENT PLEASE CONTACT

Department of the Navy
Freedom of Information Act Office

http://www.secnav.navy.mil/foia/Pages/default.aspx

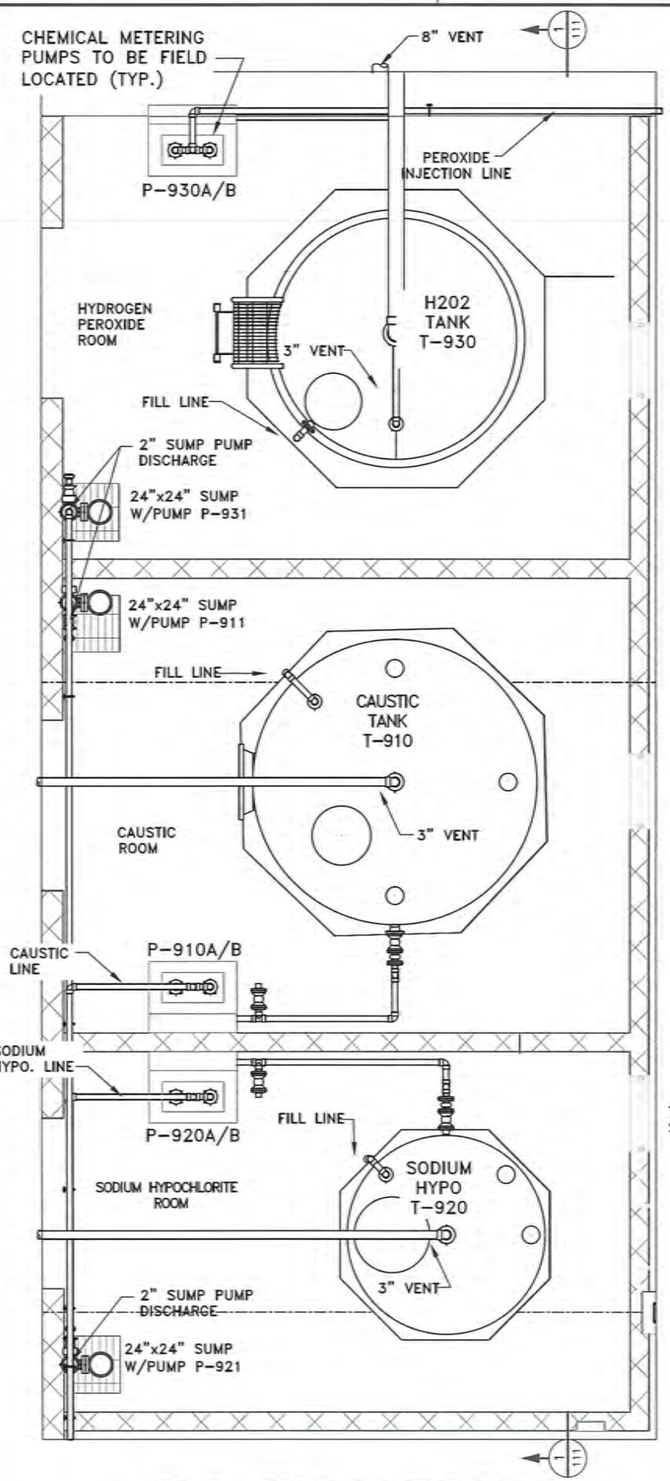

CHEMICAL ROOMS ENLARGED PLAN
SCALE 3/8"=1'-0"

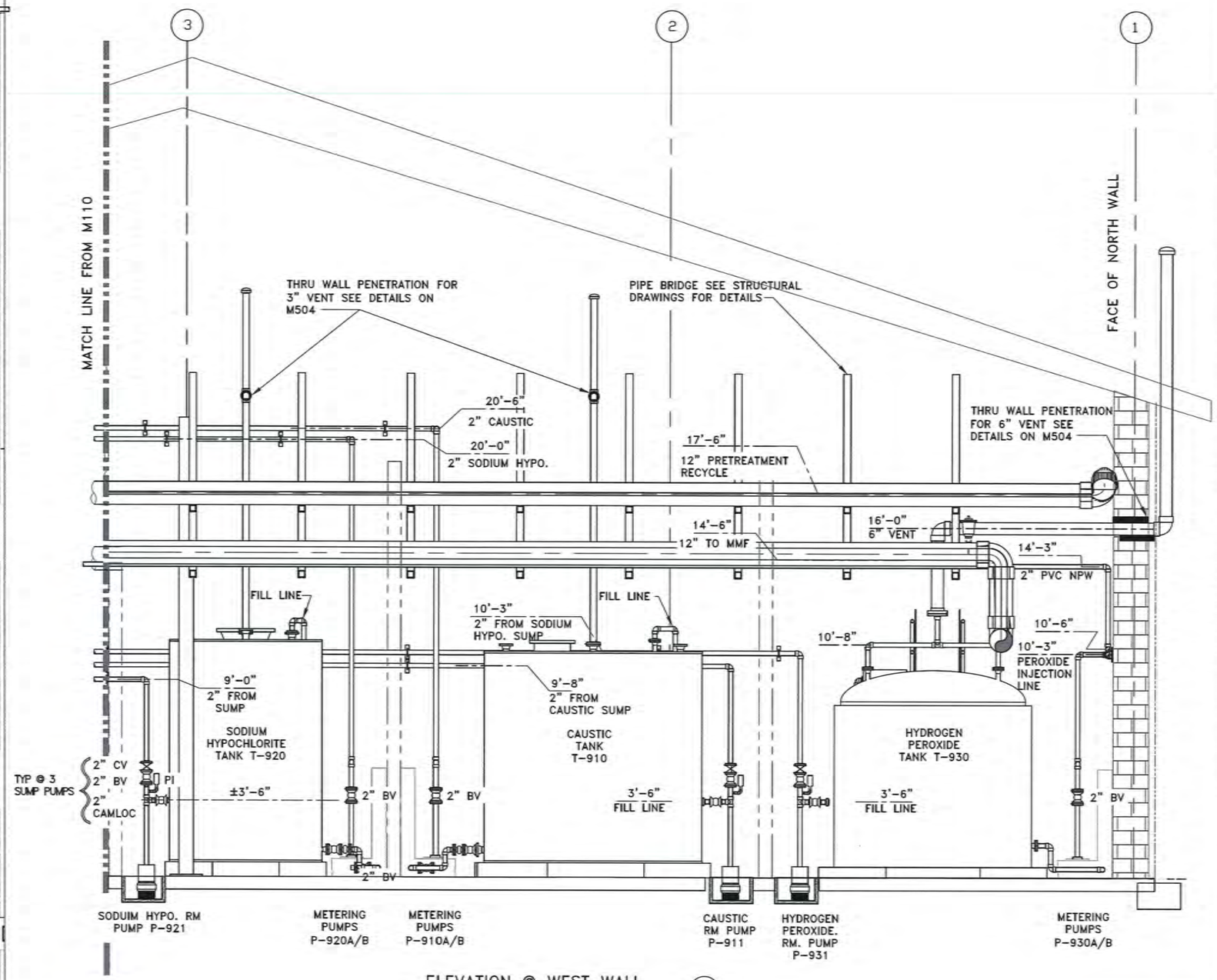

ELEVATION @ WEST WALL (1/M111)
SCALE 3/8"=1'-0" (SEE PLAN DRAWING M-101)

THIS DRAWING PRODUCED ON AUTOCAD DO NOT REVISE MANUALLY

THIS DOCUMENT IS THE PROPERTY OF NAVAL FACILITIES ENGINEERING COMMAND, PREPARED BY TETRA TECH ENGINEERING CORPORATION PC, AND IS PROVIDED UPON THE CONDITION THAT IT WILL NOT BE REPRODUCED, COPIED, OR ISSUED TO A THIRD PARTY, AND WILL BE USED SOLELY FOR THE ORIGINAL INTENDED PURPOSE AND SOLELY FOR THE EXECUTION OR REVIEW OF THE ENGINEERING CONSTRUCTION OF THE PROJECT.

IT IS A VIOLATION OF THE NEW YORK STATE EDUCATION LAW, ARTICLE 145, FOR ANY PERSON, UNLESS UNDER THE DIRECTION OF A NEW YORK STATE LICENSED PROFESSIONAL ENGINEER, TO ALTER AN ITEM ON THIS DOCUMENT IN ANY WAY.

ISSUED FOR BID FEB., 2026

CAUTION: IF SHEET IS LESS THAN 34"x22" USE GRAPHIC SCALE

NAVFAC

STATE OF NEW YORK — LICENSED PROFESSIONAL ENGINEER — 080336

TETRA TECH
www.tetratech.com
4430 CORPORATION LANE, SUITE 300
VIRGINIA BEACH, VA 23462
PHONE: (757) 461-2768 FAX: (757) 461-4148
A/E INFO

APPROVED
FOR COMMAND NAVFAC
ACTION: As per document from Nicole Coward NAVFAC. MIDLANT PLL/EV3
SATISFACTION TO DATE: 03/24/2026

DES: HKM	DRW: KW	CHK: HKM
PM/CM:		
BRANCH MANAGER:		
CHIEF ENG/ARCH:		
FIRE PROTECTION:		

NAVAL FACILITIES ENGINEERING SYSTEMS COMMAND - MID - ATLANTIC
NAVAL INDUSTRIAL RESERVE ORDNANCE PLANT
GM08
NAVAL WEAPONS INDUSTRIAL RESERVE PLANT BETHPAGE, NEW YORK
PHASE III - TREATMENT PLANT
CHEMICAL ROOMS ENLARGED PLANS & ELEVATION

SCALE: AS NOTED
EPROJECT NO.: -
CONSTR. CONTR. NO. 112G08005
NAVFAC DRAWING NO. ##
SHEET OF -

M-111

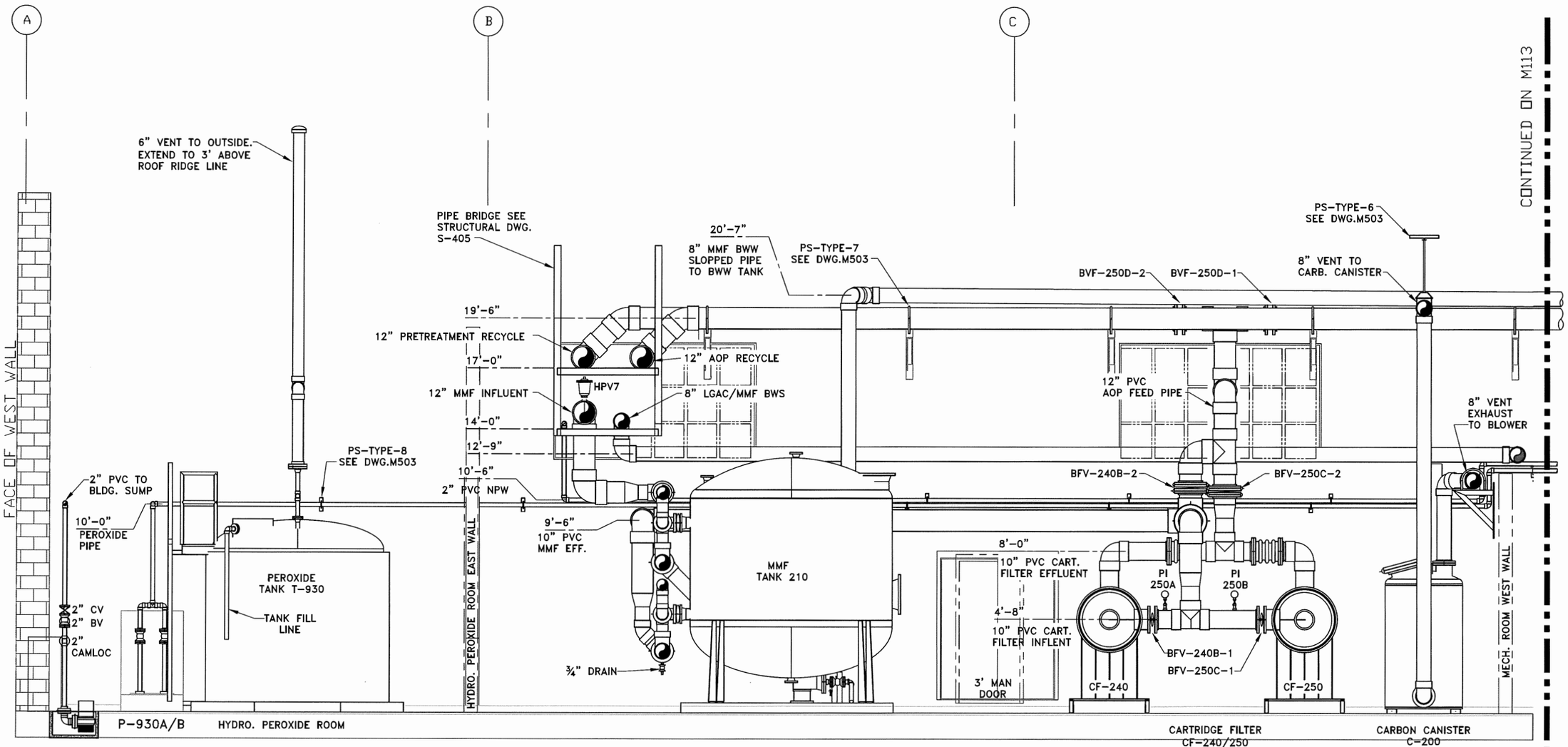

ELEVATION @ NORTH WALL (1 / 112)
SCALE 3/8"=1'-0" (SEE PLAN DRAWING M-101)

THIS DRAWING PRODUCED ON AUTOCAD DO NOT REVISE MANUALLY

"THIS DOCUMENT IS THE PROPERTY OF NAVAL FACILITIES ENGINEERING COMMAND, PREPARED BY TETRA TECH ENGINEERING CORPORATION PC, AND IS PROVIDED UPON THE CONDITION THAT IT WILL NOT BE REPRODUCED, COPIED, OR ISSUED TO A THIRD PARTY, AND WILL BE USED SOLELY FOR THE ORIGINAL INTENDED PURPOSE AND SOLELY FOR THE EXECUTION OR REVIEW OF THE ENGINEERING CONSTRUCTION OF THE PROJECT".

IT IS A VIOLATION OF THE NEW YORK STATE EDUCATION LAW, ARTICLE 145, FOR ANY PERSON, UNLESS UNDER THE DIRECTION OF A NEW YORK STATE LICENSED PROFESSIONAL ENGINEER, TO ALTER AN ITEM ON THIS DOCUMENT IN ANY WAY.

ISSUED FOR BID FEB., 2026

CAUTION:IF SHEET IS LESS THAN 34"x22" USE GRAPHIC SCALE

NAVFAC

STATE OF NEW YORK — DAVID DANIEL BRAVACE — 080336 — LICENSED PROFESSIONAL ENGINEER — SEAL

TETRA TECH
www.tetratech.com
4433 CORPORATION LANE, SUITE 300
VIRGINIA BEACH, VA 23462
PHONE: (757) 461-3758 FAX: (757) 461-1148
A/E INFO

APPROVED
FOR COMMANDER NAVFAC
ACINT: As per document from Nicole Coward NAVFAC. MIDLANT PL/EV3
SATISFACTORY TO DATE 03/24/2026
DES HKM DRW KW CHK HKM
PM/DM
BRANCH MANAGER
CHIEF ENG/ARCH
FIRE PROTECTION

NAVAL FACILITIES ENGINEERING SYSTEMS COMMAND - MID - ATLANTIC
NAVAL INDUSTRIAL RESERVE ORDNANCE PLANT
GA03
NAVAL WEAPONS INDUSTRIAL RESERVE PLANT BETHPAGE, NEW YORK
PHASE III - TREATMENT PLANT
TREATMENT PLANT NORTH WALL PIPING ELEVATION

SCALE: AS NOTED
EPROJECT NO.:
CONSTR. CONTR. NO. 112G08005
NAVFAC DRAWING NO. ##
SHEET OF
M-112

NOTIFICATION: THIS PAGE CONTAINS SENSITIVE BUT UNCLASSIFIED INFORMATION WHICH IS PROTECTED BY THE FREEDOM OF INFORMATION ACT

EXEMPTION 3. (5 USC 552(b)(3))

Information exempted by other statutes

10 USC Section 130(e) Treatment of Certain Critical Infrastructure Security Information

Pages 122-124

TO REQUEST A COPY OF THE DOCUMENT PLEASE CONTACT

Department of the Navy
Freedom of Information Act Office

http://www.secnav.navy.mil/foia/Pages/default.aspx

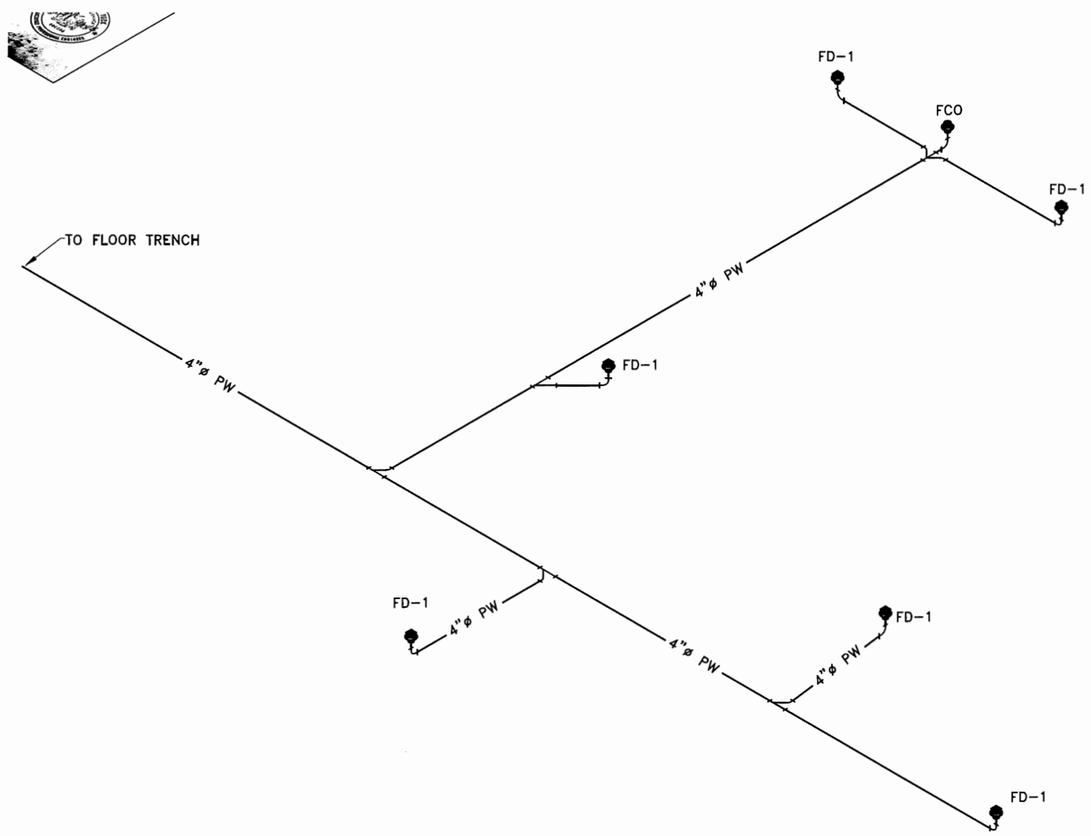

FLOOR DRAIN SYSTEM ISOMETRIC
SCALE: NTS

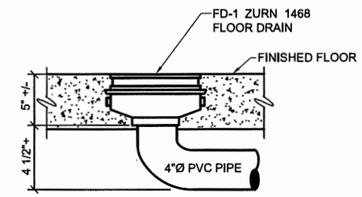

FLOOR DRAIN DETAIL
SCALE: NTS

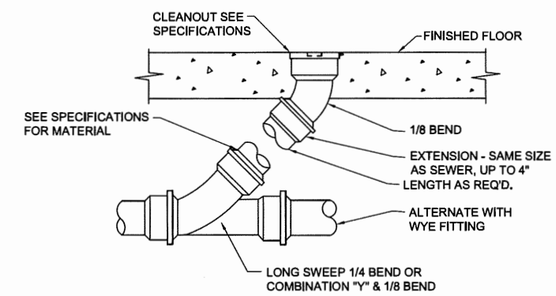

FLOOR CLEANOUT DETAIL
SCALE: NTS

PLUMBING FIXTURE SCHEDULE

MARK	DESCRIPTION	ADA	CONNECTION SIZE (IN)				MANUFACTURE	MODEL	NOTES
			DCW	HW	WASTE	VENT			
FCO	FLOOR CLEANOUT		1-1/4"	1-1/4"	–	–	GUARDIAN	G19505BC	PROVIDE ALARM WITH FLOW SWITCH WITH CONNECTION TO PLC
FD-1	PROCESS FLOOR DRAIN		–	–	–	–	ZURN	Z1400	–

THIS DRAWING PRODUCED ON AUTOCAD
DO NOT REVISE MANUALLY

THIS DOCUMENT IS THE PROPERTY OF NAVAL FACILITIES ENGINEERING COMMAND, PREPARED BY TETRA TECH ENGINEERING CORPORATION PC, AND IS PROVIDED UPON THE CONDITION THAT IT WILL NOT BE REPRODUCED, COPIED, OR ISSUED TO A THIRD PARTY, AND WILL BE USED SOLELY FOR THE ORIGINAL INTENDED PURPOSE AND SOLELY FOR THE EXECUTION OR REVIEW OF THE ENGINEERING CONSTRUCTION OF THE PROJECT.

IT IS A VIOLATION OF THE NEW YORK STATE EDUCATION LAW, ARTICLE 145, FOR ANY PERSON, UNLESS UNDER THE DIRECTION OF A NEW YORK STATE LICENSED PROFESSIONAL ENGINEER, TO ALTER AN ITEM ON THIS DOCUMENT IN ANY WAY.

ISSUED FOR BID FEB., 2026

CAUTION:IF SHEET IS LESS THAN 34"x22" USE GRAPHIC SCALE

NAVFAC

STATE OF NEW YORK
DANIEL BRANCH
080336
LICENSED PROFESSIONAL ENGINEER

TETRA TECH
www.tetratech.com
4433 CORPORATION LANE, SUITE 300
VIRGINIA BEACH, VA 23462
PHONE: (757) 481-3708 FAX: (757) 481-4148
A/E INFO

APPROVED
FOR COMMANDER NAVFAC 4/30/2026

ACTIVITY
As per document from Nicole Coward
NAVFAC. MIDLANT PLL/EV3

SATISFACTORY TO DATE 03/24/2026

DES	DRW	CHK
HKN	KW	HKM

PM/DM
BRANCH MANAGER
CHIEF ENG/ARCH
FIRE PROTECTION

NAVAL FACILITIES ENGINEERING SYSTEMS COMMAND - MID - ATLANTIC
NAVAL INDUSTRIAL RESERVE ORDNANCE PLANT
NAVAL WEAPONS INDUSTRIAL RESERVE PLANT BETHPAGE, NEW YORK
PHASE III - TREATMENT PLANT
GWTP. PROCESS WATER FLOOR DRAIN SYSTEM ISOMETRIC & DETAIL

SCALE: AS NOTED
EPROJECT NO.: -
CONSTR. CONTR. NO. 112G08005
NAVFAC DRAWING NO. ##
SHEET OF -

M-116

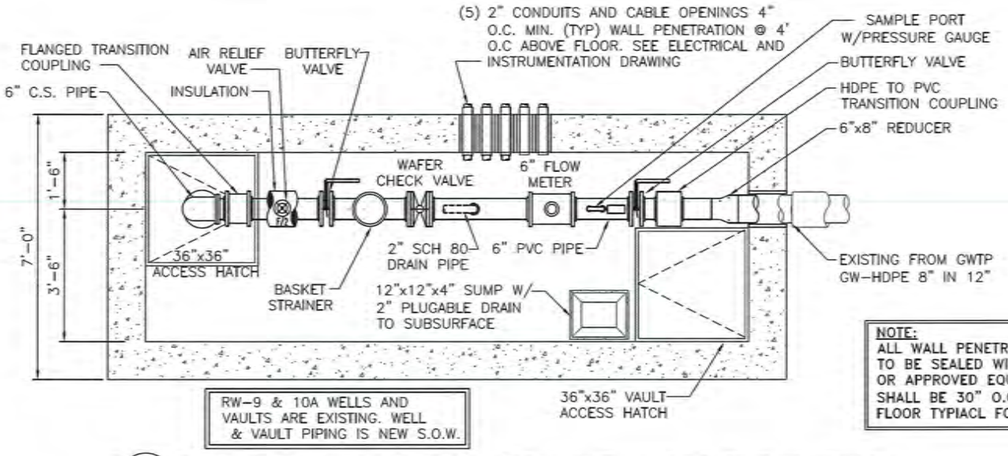

NOTE:
ALL WALL PENETRATION TO BE SEALED WITH LINKSEAL OR APPROVED EQUAL AND SHALL BE 30" O.C. ABOVE FLOOR TYPIACL FOR ALL PIPES

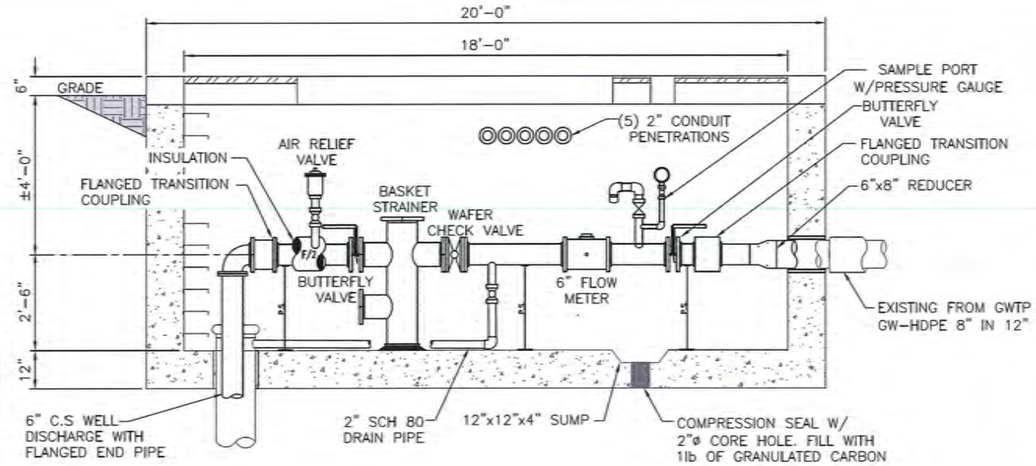

1 M-501 TYPICAL PLAN & SECTION FOR VALVE VAULTS RW9 & RW10A
SCALE: 1/2" = 1'-0"

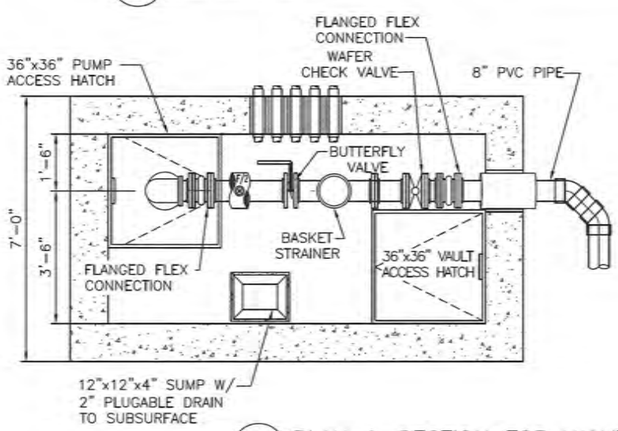

2 M-501 PLAN & SECTION FOR VALVE VAULT @ RW8
SCALE: 1/2" = 1'-0"

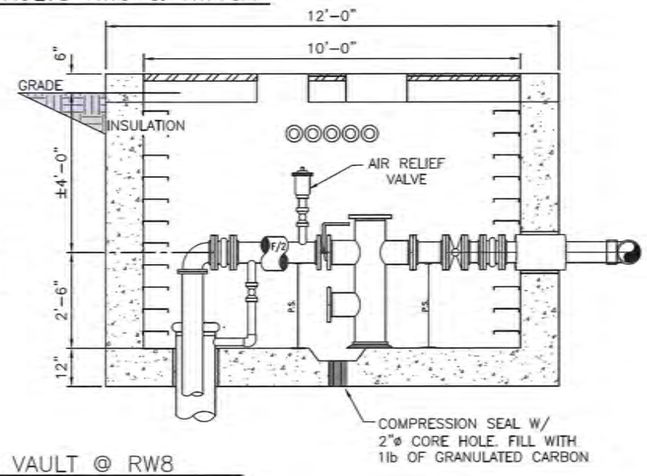

SPECIFICATION FOR VAULT ACCESS COVER

PROVIDE H1W3636 (SINGLE LEAF) ACCESS FRAME AND COVER AS MANUFACTURED BY HALLIDAY PRODUCTS, INC. OF ORLANDO, FLORIDA OR APPROVED EQUAL COVER SHALL HAVE A 1/4" THICK, MILL FINISH, EXTRUDED ALUMINUM FRAME, INCORPORATING EMBED ANCHOR PLATES. THE DOOR PANEL SHALL BE 1/4" ALUMINUM DIAMOND PLATE, REINFORCED TO ACHIEVE AN H20 LOAD RATING. DOOR SHALL OPEN TO 90° AND AUTOMATICALLY LOCK WITH A STAINLESS STEEL HOLD OPEN ARM WITH ALUMINUM RELEASE HANDLE. DOOR SHALL CLOSE FLUSH WITH THE FRAME DOOR SHALL PROVIDE SPRING ASSIST FOR OPENING. HINGES AND ALL FASTENING HARDWARE SHALL BE STAINLESS STEEL UNIT SHALL LOCK WITH A NON-CORROSIVE LOCKING BAR AND HAVE A NON-CORROSIVE HANDLE. UNIT SHALL INCLUDE OPTIONAL SLAM LOCK WITH KEY AND PLUG UNIT SHALL BE GUARANTEED AGAINST DEFECTS IN MATERIAL AND/OR WORKMANSHIP FOR A PERIOD OF 10 YEARS.

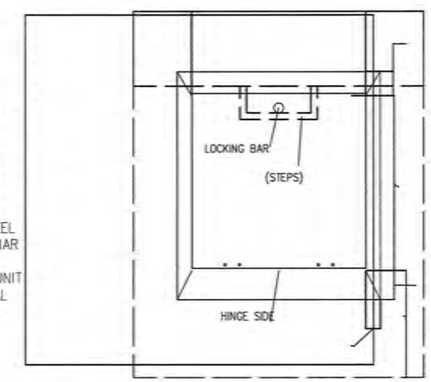

4 M-501 ACCESS COVER PLAN TYPICAL (U.N.)
SCALE: (NTS)

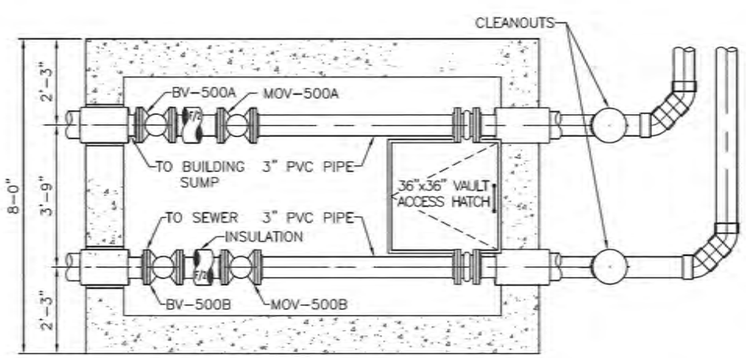

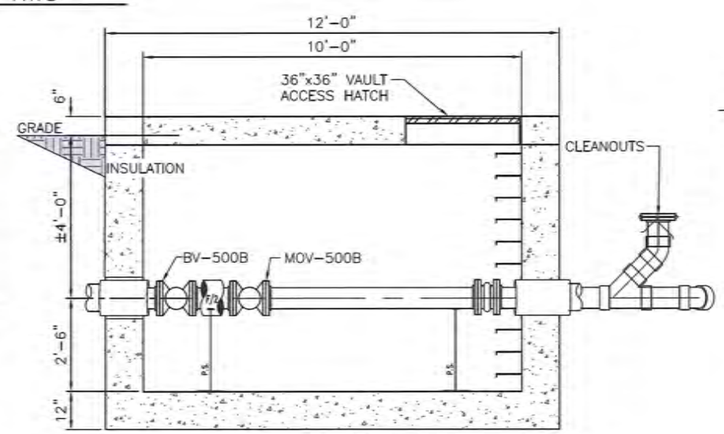

3 M-501 PLAN & SECTION FOR VALVE VAULT 551
SCALE: NTS.

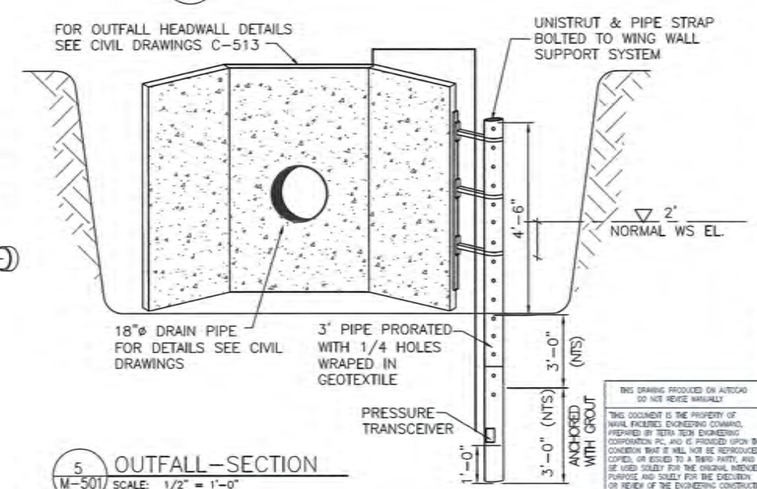

5 M-501 OUTFALL-SECTION
SCALE: 1/2" = 1'-0"

ISSUED FOR BID FEB., 2026

THIS DRAWING PRODUCED ON AUTOCAD DO NOT REVISE MANUALLY

"THIS DOCUMENT IS THE PROPERTY OF NAVAL FACILITIES ENGINEERING COMMAND, PREPARED BY TETRA TECH ENGINEERING CORPORATION PC, AND IS PROVIDED UPON THE CONDITION THAT IT WILL NOT BE REPRODUCED, COPIED, OR ISSUED TO A THIRD PARTY, AND WILL BE USED SOLELY FOR THE ORIGINAL INTENDED PURPOSE AND SOLELY FOR THE EXECUTION OR REVIEW OF THIS ENGINEERING CONSTRUCTION OF THE PROJECT".

IT IS A VIOLATION OF THE NEW YORK STATE EDUCATION LAW, ARTICLE 145, FOR ANY PERSON, UNLESS UNDER THE DIRECTION OF A NEW YORK STATE LICENSED PROFESSIONAL ENGINEER, TO ALTER AN ITEM ON THIS DOCUMENT IN ANY WAY.

NAVFAC

STATE OF NEW YORK — DAVID DANIEL BARRICK — 080336 — LICENSED PROFESSIONAL ENGINEER

TETRA TECH
4430 CORPORATION LANE, SUITE 300
VIRGINIA BEACH, VA 23462
PHONE: (757) 461-2318 FAX: (757) 461-1148
A/E INFO

APPROVED
FOR COMMANDER NAVFAC

ACTIVITY:
As per document from Nicole Coward NAVFAC, MIDLANT PLL/EV3

SUBMITTAL DATE 03/24/2026
DES NS DRW RW CHK RPM
PM/DM
BRANCH MANAGER
CHIEF ENG/ARCH
FIRE PROTECTION

NAVAL FACILITIES ENGINEERING SYSTEMS COMMAND - MID - ATLANTIC
NAVAL INDUSTRIAL RESERVE ORDNANCE PLANT
NAVAL WEAPONS INDUSTRIAL RESERVE PLANT BETHPAGE, NEW YORK
PHASE III - TREATMENT PLANT

VALVE VAULT PLANS AND SECTIONS

SCALE: AS NOTED
EPROJECT NO.:
CONTRL CONTR. NO. 112G0B005
NAVFAC DRAWING NO. 112G0B005
SHEET OF
M-501

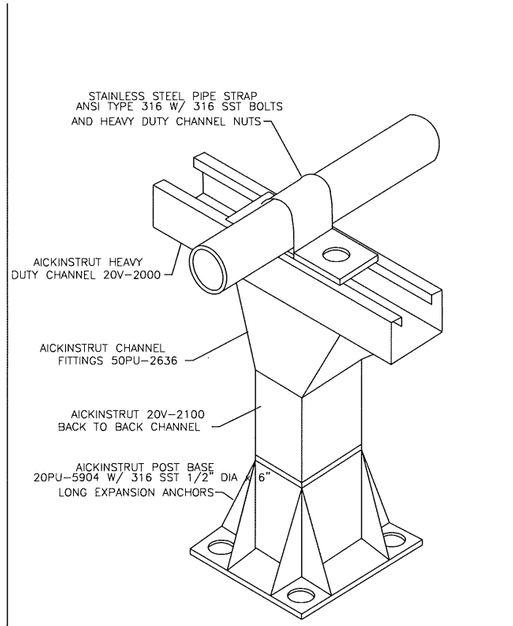

1 M-502 PIPE SUPPORT NON METALLIC STANCHION

SCALE: NTS.

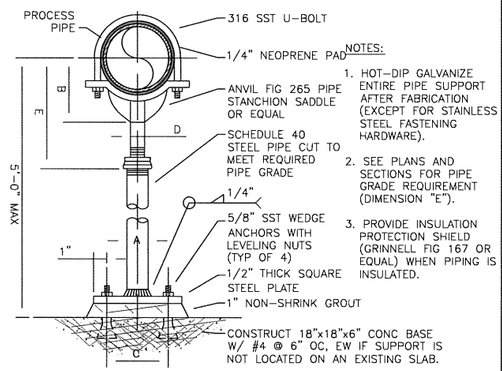

NOTES:

1. HOT-DIP GALVANIZE ENTIRE PIPE SUPPORT AFTER FABRICATION (EXCEPT FOR STAINLESS STEEL FASTENING HARDWARE).
2. SEE PLANS AND SECTIONS FOR PIPE GRADE REQUIREMENT (DIMENSION "E").
3. PROVIDE INSULATION PROTECTION SHIELD (GRINNELL FIG 167 OR EQUAL) WHEN PIPING IS INSULATED.

PIPE SIZE	A	B	C	D	E	
					MIN	MAX
4	4	4 3/16	7	3	9 1/2	14
6	4	5 7/16	7	3	10 3/4	15 1/4
8	4	6 15/16	7	3	12 1/4	16 3/4
10	4	8 7/16	7	3	13 3/4	18 1/4
12	4	9 15/16	7	3	14 5/8	19 1/8
16	4	11 1/2	7	3	16 13/16	21 5/16
18	6	13 1/2	9	3 1/2	19 1/8	23 5/8
20	6	14 1/2	9	3 1/2	20 1/8	24 5/8
24	6	17 1/2	9	4	23 5/16	27 13/16

* ALL DIMENSIONS IN INCHES.

2 M-502 PIPE SUPPORT – ADJUSTABLE STANCHION W/ U-BOLT

SCALE: NTS.

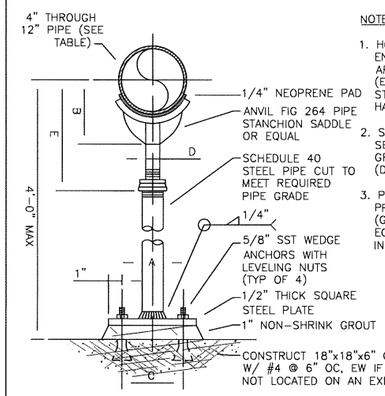

NOTES:

1. HOT-DIP GALVANIZE ENTIRE PIPE SUPPORT AFTER FABRICATION (EXCEPT FOR STAINLESS STEEL FASTENING HARDWARE).
2. SEE PLANS AND SECTIONS FOR PIPE GRADE REQUIREMENT (DIMENSION "E").
3. PROVIDE INSULATION PROTECTION SHIELD (GRINNELL FIG 167 OR EQUAL) WHEN PIPING IS INSULATED.

PIPE SIZE	A	B	C	D	E	
					MIN	MAX
4	3	4 1/4	7	2 1/2	9 1/4	14
5	3	4 7/8	7	2 1/2	10	14 3/4
6	3	5 1/2	7	2 1/2	10 1/2	15 1/4
8	3	6 7/8	7	2 1/2	11 3/4	16 1/2
10	3	8 1/2	7	2 1/2	13 1/2	18 1/4
12	3	9 15/16	7	2 1/2	15	19 3/4

* ALL DIMENSIONS IN INCHES.

3 M-502 PIPE SUPPORT – ADJUSTABLE STANCHION SADDLE

SCALE: NTS.

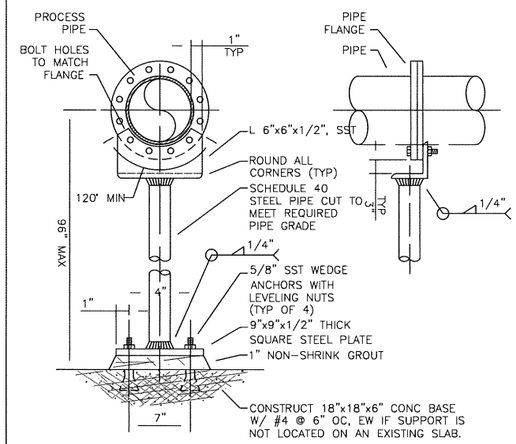

NOTES:

1. HOT-DIP GALVANIZE ENTIRE PIPE SUPPORT AFTER FABRICATION (EXCEPT FOR STAINLESS STEEL FASTENING HARDWARE).
2. SEE PLANS AND SECTIONS FOR PIPE GRADE REQUIREMENT.
3. PIPE SUPPORT SUITABLE FOR PIPE SIZES 3" THROUGH 24" DIA.

4 M-502 PIPE SUPPORT FLANGE

SCALE: NTS.

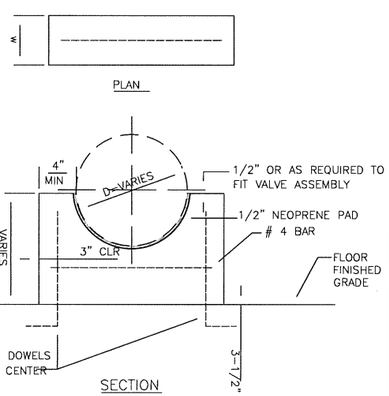

NOTE:
PROVIDE CONCRETE FOOTING BELOW GRADE FOR ALL FINISHED GRADE APPLICATIONS.

PIPE DIAMETER "D" (IN)	MINIMUM WIDTH "W" (IN)
12 ≤	6
16 ≤	8
24 ≤	12
36 ≤	16

5 M-502 PIPE SUPPORT– CONCRETE SADDLE

SCALE: NTS.

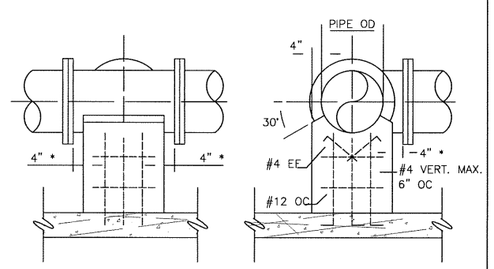

* INCREASE 4" CLEARANCE AS REQUIRED IF BOLT HAS TO BE INSERTED FROM THE SUPPORT SIDE OF THE CONNECTION.

6 M-502 PIPE SUPPORT– CONCRETE PEDESTAL

SCALE: NTS.

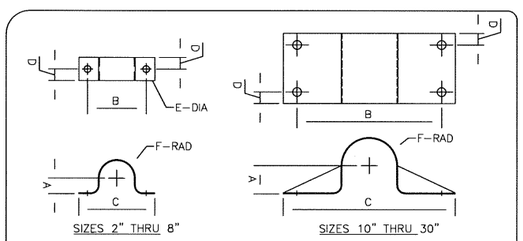

PIPE SIZE	A	B	C	D	E	F	STOCK SIZE	APPROX WEIGHT PER 100
2	15/16	5-3/8	7-5/8	1-1/2	7/8	1-3/16	3/8 x 3	306
2-1/2	1-5/16	5-7/8	8-1/8	1-1/2	7/8	1-7/16	3/8 x 3	348
3	1-1/2	6-1/2	8-3/4	1-1/2	7/8	1-3/4	3/8 x 3	409
3-1/2	1-3/4	7	9-1/4	1-1/2	7/8	2	3/8 x 3	449
4	2	7-1/2	9-3/4	1-1/2	7/8	2-1/4	3/8 x 3	491
5	2-9/16	8-9/16	10-13/	116-1/2	7/8	2-13/16	3/8 x 3	581
6	3-1/16	10-5/8	13-5/8	3	1	3-5/16	1/2 x 6	2000
8	4-1/16	12-5/8	15-5/8	3	1	4-5/16	1/2 x 6	2400
10	5-1/8	15-1/4	18-3/4	2-1/2	1-1/8	5-3/8	1/2 x 8	4281
12	6-1/8	17-1/4	20-3/4	2-1/2	1-1/8	6-3/8	1/2 x 8	4546
14	6-3/4	18-1/2	22	3	1-1/8	7	/2 x 10	6800
16	7-3/4	20-1/2	24	3	1-1/8	8	/2 x 10	7600
18	8-3/4	22-1/2	26	3-1/2	1-1/8	9	/2 x 12	10800
20	9-3/4	24-1/2	28	3-1/2	1-1/8	10	/2 x 12	12000
24	11-3/4	28-1/2	32	3-1/2	1-1/8	12	/2 x 12	13900
30	14-3/4	34-1/2	38	3-1/2	1-1/8	15	/2 x 12	16200

7 M-502 PIPE SUPPORT – ANCHOR CLAMP

SCALE: NTS.

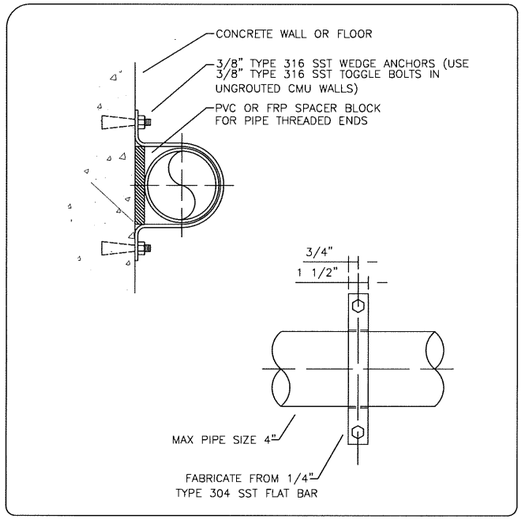

8 M-502 PIPE SUPPORT – FLUSH

SCALE: NTS.

THIS DRAWING PRODUCED ON AUTOCAD DO NOT REVISE MANUALLY

"THIS DOCUMENT IS THE PROPERTY OF NAVAL FACILITIES ENGINEERING COMMAND, PREPARED BY TETRA TECH ENGINEERING CORPORATION PC, AND IS PROVIDED UPON THE CONDITION THAT IT WILL NOT BE REPRODUCED, COPIED, OR ISSUED TO A THIRD PARTY, AND WILL BE USED SOLELY FOR THE ORIGINAL INTENDED PURPOSE AND SOLELY FOR THE EXECUTION OR REVIEW OF THE ENGINEERING CONSTRUCTION OF THE PROJECT".

IT IS A VIOLATION OF THE NEW YORK STATE EDUCATION LAW, ARTICLE 145, FOR ANY PERSON, UNLESS UNDER THE DIRECTION OF A NEW YORK STATE LICENSED PROFESSIONAL ENGINEER, TO ALTER AN ITEM ON THIS DOCUMENT IN ANY WAY.

ISSUED FOR BID FEB., 2026

CAUTION:IF SHEET IS LESS THAN 24"x22" USE GRAPHIC SCALE

NAVFAC

STATE OF NEW YORK — DAVID DANIEL BRAACK — 080336 — LICENSED PROFESSIONAL ENGINEER — SEAL

TETRA TECH
www.tetratech.com
4433 CORPORATION LANE, SUITE 300
VIRGINIA BEACH, VA 23462
PHONE: (757) 461-3768 FAX: (757) 461-4148
A/E INFO

APPROVED
FOR COMMANDER NAVFAC
ACTIVITY
As per document from Nicole Coward
NAVFAC. MIDLANT PLL/EV3
SATISFACTORY TO DATE 03/24/2026
DES NS DRW KW CHK HKM
PM/DM
BRANCH MANAGER
CHIEF ENG/ARCH
FIRE PROTECTION

NAVAL FACILITIES ENGINEERING SYSTEMS COMMAND - MID - ATLANTIC
NAVAL INDUSTRIAL RESERVE ORDNANCE PLANT
GM38 NAVAL WEAPONS INDUSTRIAL RESERVE PLANT BETHPAGE, NEW YORK
PHASE III - TREATMENT PLANT
MECHANICAL PIPE SUPPORT DETAILS

SCALE: AS NOTED
EPROJECT NO.: .
CONSTR. CONTR. NO. 112G08005
NAVFAC DRAWING NO. 112G08005
SHEET . OF .
M-502

FILE NAME: C:\Projects\Phase -3\Drawings\Details\Detiels M502-503-504-505.dwg LAYOUT NAME: DET-M-502 PLOTTED: Wednesday, April 22, 2026 - 3:34pm USER: KEVIN.WAKE

TYPE-1

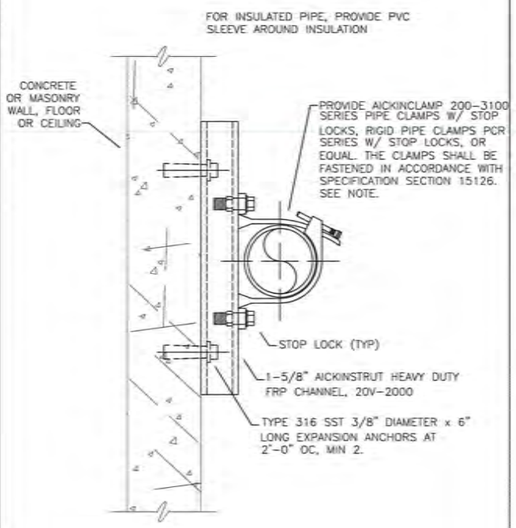

1 M-503 PIPE SUPPORT – NON MATALLIC W/ U-BOLT
SCALE: NTS.

TYPE-2

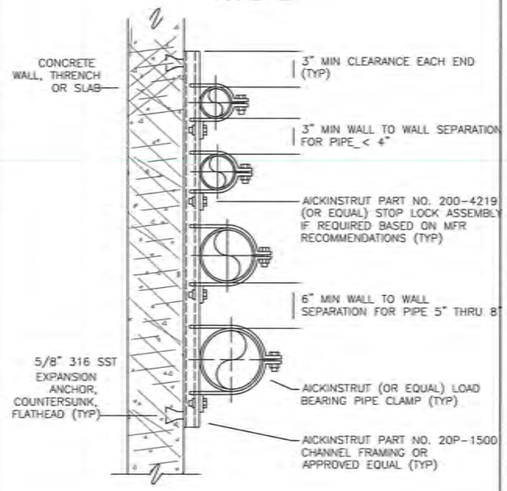

NOTES:

1. SEE DRAWINGS FOR TYPE, SIZE (MAX 8"), AND QUANTITY OF SUPPORTED PIPES.
2. ALL FRAMING AND PIPE SUPPORT MATERIALS SHALL BE EITHER FRP (INTERIOR ONLY) OR 316 SST (UNISTRUT OR EQUAL FOR EXTERIOR).

2 M-503 PIPE SUPPORT – STACKED
SCALE: NTS.

TYPE-3

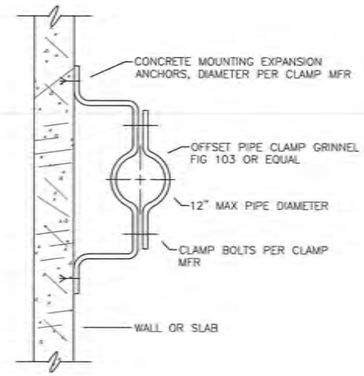

NOTE:
ALL MATERIALS OF CONSTRUCTION SHALL BE 316 STAINLESS STEEL OR ALUMINUM. ALL MOUNTING HARDWARE SHALL BE 316 STAINLESS STEEL.

3 M-503 PIPE SUPPORT – OFFSET
SCALE: NTS.

TYPE-4

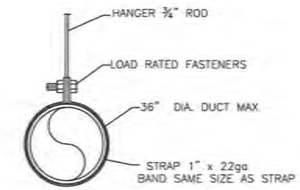

NOTE:
MAX. SPACING OF DUCT SUPPORTS SHALL NOT EXCEED 10' O.C.

4 M-503 DUCT SUPPORT – HANGER CLEVIS AND PLATE
SCALE: NTS.

TYPE-5

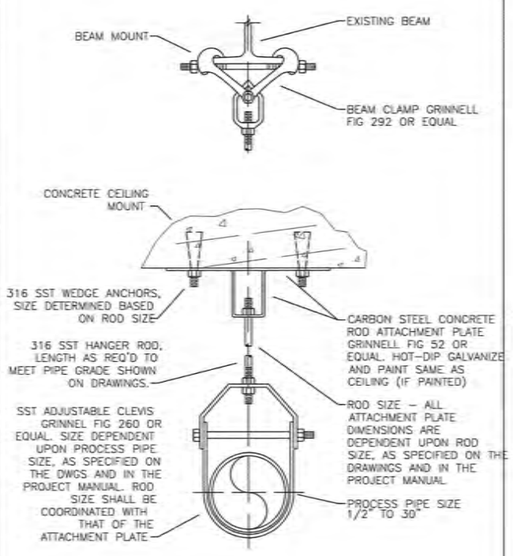

5 M-503 PIPE SUPPORT – HANGER CLEVIS AND PLATE
SCALE: NTS.

TYPE-6

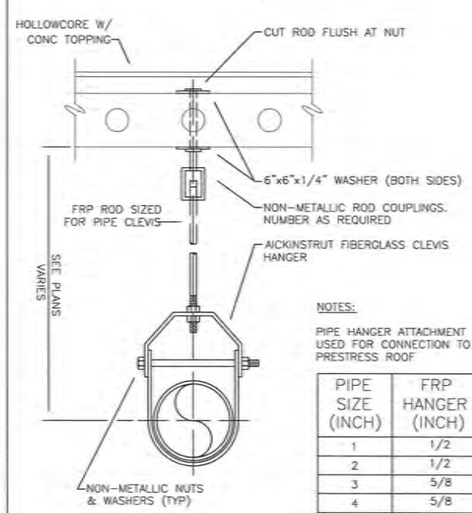

NOTES:

PIPE HANGER ATTACHMENT TO BE USED FOR CONNECTION TO CONC PRESTRESS ROOF

PIPE SIZE (INCH)	FRP HANGER (INCH)
1	1/2
2	1/2
3	5/8
4	5/8
6	5/8
8	5/8

TRANSVERSE ROD SIZE FOR PIPES 8" AND LESS = 3/8" OD

SPREADER ROD SIZE FOR PIPES 8" AND LESS = 1/2" OD

6 M-503 PIPE SUPPORT – NON MATALLIC HANGER
SCALE: NTS.

TYPE-7

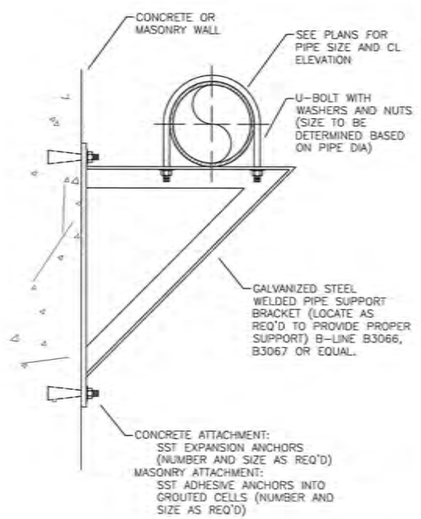

7 M-503 PIPE SUPPORT KNEE WALL BRACE
SCALE: NTS.

TYPE-8

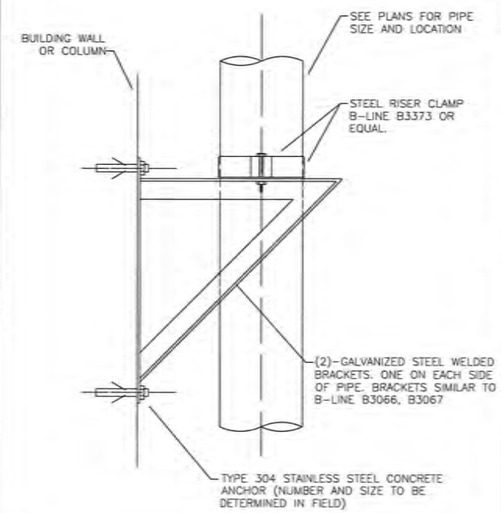

NOTE:
1. USE SST BRACKETS WHERE CALLED FOR ON PLANS.

8 M-503 PIPE SUPPORT – WALL (VERTICAL)
SCALE: NTS.

THIS DRAWING PRODUCED ON AUTODESK (DO NOT REVISE MANUALLY)

THIS DOCUMENT IS THE PROPERTY OF NAVAL FACILITIES ENGINEERING COMMAND. PREPARED BY TETRA TECH ENGINEERING CORPORATION, PC, AND IS PROVIDED UPON THE CONDITION THAT IT WILL NOT BE REPRODUCED, COPIED, OR ISSUED TO A THIRD PARTY, AND WILL NOT BE USED FOR ANY PURPOSE INTERIOR TO THE EXECUTION OF THE PROJECT.

IT IS A VIOLATION OF THE NEW YORK STATE EDUCATION LAW, ARTICLE 145, FOR ANY PERSON, UNLESS UNDER THE DIRECTION OF A NEW YORK STATE LICENSED PROFESSIONAL ENGINEER, TO ALTER AN ITEM ON THIS DOCUMENT IN ANY WAY.

ISSUED FOR BID FEB., 2026

NAVFAC

STATE OF NEW YORK · DANIEL BRANDT · 080336 · LICENSED PROFESSIONAL ENGINEER

TETRA TECH
www.tetratech.com
4433 CORPORATION LANE, SUITE 300
VIRGINIA BEACH, VA 23462
PHONE: (757) 461-2358 FAX: (757) 461-4148
A/E INFO

APPROVED
FOR COMMODOR NAVFAC

ACTIVITY
As per document from Nicole Gerard NAVFAC, MIDLANT PLL/EV3
SATISFACTORY TO SMT 03/24/2026
DES DRW CHK
PM/CM
BRANCH MANAGER
CHIEF ENG/ARCH
FIRE PROTECTION

NAVAL FACILITIES ENGINEERING SYSTEMS COMMAND - MID - ATLANTIC
NAVAL WEAPONS INDUSTRIAL RESERVE PLANT, BETHPAGE, NEW YORK
PHASE III - TREATMENT PLANT
MECHANICAL PIPE SUPPORT DETAILS

SCALE: AS NOTED
EPROJECT NO.:
CONSTR. CONTR. NO. 112G08005
NAVFAC DRAWING NO. 112G08005
SHEET - OF -
M-503

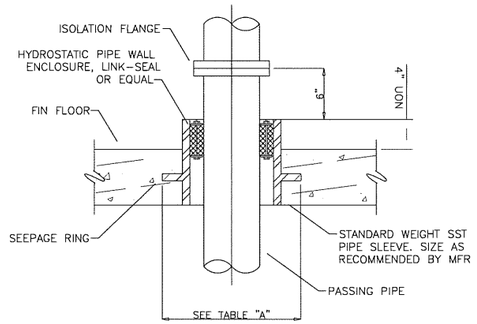

PIPE SIZE (IN)	NOMINAL SLEEVE DIA (IN)	PIPE SIZE (IN)	NOMINAL SLEEVE DIA (IN)
2	4	16	23-1/2
2-1/2	7	18	25
3	7-1/2	20	27-1/2
4	9	24	32
6	11	30	38-3/4
8	13-1/2	36	46
10	16	42	53
12	19	48	59-1/2
14	21		

1 M-504 WALL PENETRATION CONCRETE (FLOOR)
SCALE: NTS.

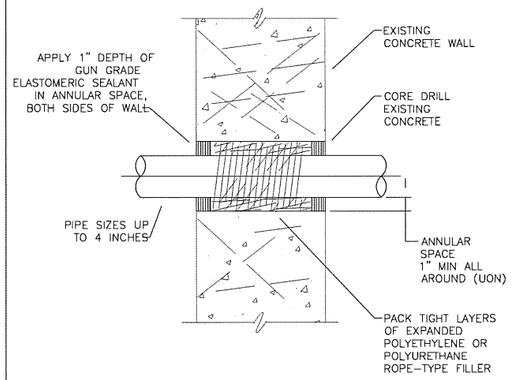

2 M-504 WALL PENETRATION CONCRETE (SMALL DIAMETER)
SCALE: NTS.

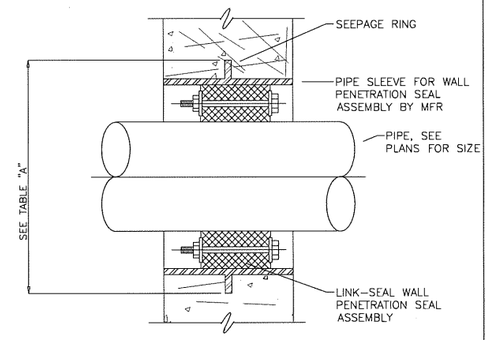

PIPE SIZE (IN)	NOMINAL SLEEVE DIA (IN)	"A" (IN)	PIPE SIZE (IN)	NOMINAL SLEEVE DIA (IN)	"A" (IN)
2	4	6	12	16	19
2-1/2	4	7	14	18	21
3	5	7-1/2	16	20	23-1/2
4	6	9	18	24	25
6	10	13	20	24	27-1/2
8	12	14	24	30	32
10	14	17			

3 M-504 WALL PENETRATION - LINKSEAL (TYP)
SCALE: NTS.

4 WALL PENETRATION - LINK SEAL (CORE-DRILLED)

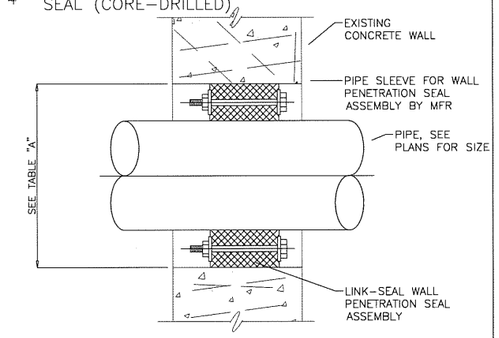

PIPE SIZE (IN)	NOMINAL OPENING "A" (IN)	PIPE SIZE (IN)	NOMINAL OPENING "A" (IN)
1	3	10	14
2	4	12	16
2-1/2	4	14	16
3	5	16	18
4	6	18	23
6	10	20	25
8	12	24	29

1 M-504 WALL PENETRATION - LINKSEAL (CORE DRILLED)
SCALE: NTS.

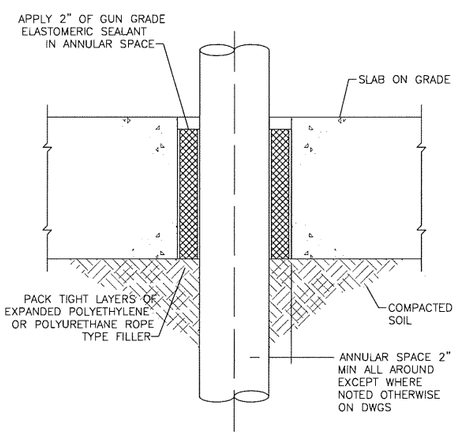

5 M-504 PIPE PENETRATION SLAB ON GRADE
SCALE: NTS.

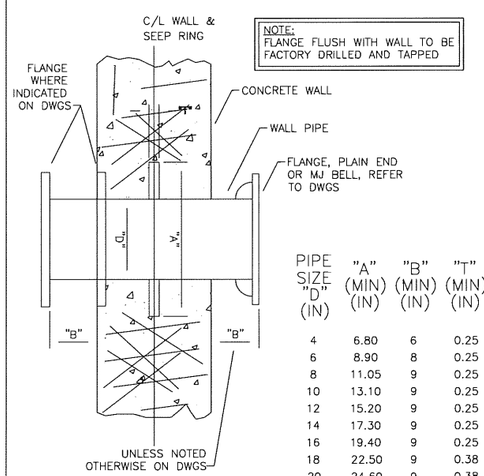

NOTE:
FLANGE FLUSH WITH WALL TO BE FACTORY DRILLED AND TAPPED

PIPE SIZE "D" (IN)	"A" (MIN) (IN)	"B" (MIN) (IN)	"T" (MIN) (IN)
4	6.80	6	0.25
6	8.90	8	0.25
8	11.05	9	0.25
10	13.10	9	0.25
12	15.20	9	0.25
14	17.30	9	0.25
16	19.40	9	0.25
18	22.50	9	0.38
20	24.60	9	0.38
24	28.80	12	0.38
30	36.00	12	0.50
36	42.30	12	0.50
42	50.75	12	0.75
48	57.05	12	0.75
54	66.06	15	1.00
60	70.11	15	1.00
64	74.17	15	1.00

6 M-504 WALL PENETRATION - WALL PIPE
SCALE: NTS.

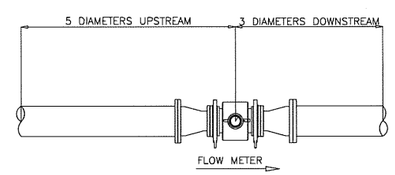

7 M-504 MAG METER STRAIGHT RUN REQUIRMENTS
SCALE: NTS.

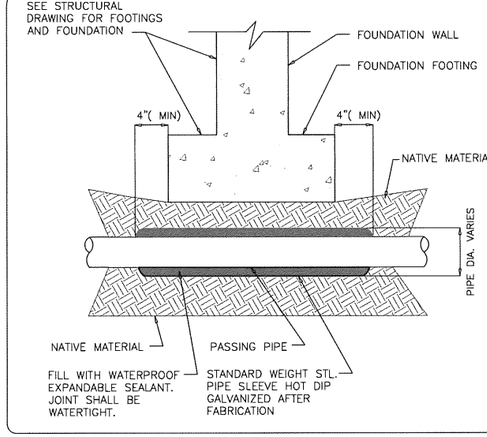

8 M-504 FOUNDATION PENETRATION (WITH LINKSEAL)
SCALE: NTS.

THIS DRAWING PRODUCED ON AUTOCAD
DO NOT REVISE MANUALLY

"THIS DOCUMENT IS THE PROPERTY OF NAVAL FACILITIES ENGINEERING COMMAND, PREPARED BY TETRA TECH ENGINEERING CORPORATION P.C. AND IS PROVIDED UPON THE CONDITION THAT IT WILL NOT BE REPRODUCED, COPIED, OR ISSUED TO A THIRD PARTY, AND WILL BE USED SOLELY FOR THE ORIGINAL INTENDED PURPOSE AND SOLELY FOR THE EXECUTION OR REVIEW OF THE ENGINEERING CONSTRUCTION OF THE PROJECT"

IT IS A VIOLATION OF THE NEW YORK STATE EDUCATION LAW, ARTICLE 145, FOR ANY PERSON, UNLESS UNDER THE DIRECTION OF A NEW YORK STATE LICENSED PROFESSIONAL ENGINEER, TO ALTER AN ITEM ON THIS DOCUMENT IN ANY WAY.

ISSUED FOR BID FEB., 2026

CAUTION:IF SHEET IS LESS THAN 24"x22" USE GRAPHIC SCALE

NAVFAC

STATE OF NEW YORK
DAVID DANIEL BRAYACK
080336
LICENSED PROFESSIONAL ENGINEER
SEAL

TETRA TECH
www.tetratech.com
4433 CORPORATION LANE, SUITE 300
VIRGINIA BEACH, VA 23462
PHONE: (757) 461-3768 FAX: (757) 461-4148
A/E INFO

APPROVED
FOR COMMANDER NAVFAC
ACTIVITY
As per document from Nicole Coward
NAVFAC. MIDLANT PLL/EV3
SATISFACTORY TO DATE 03/24/2026
DES NS DRW KW CHK HKM
PM/DM
BRANCH MANAGER
CHIEF ENG/ARCH
FIRE PROTECTION

CM38
NAVAL FACILITIES ENGINEERING SYSTEMS COMMAND - MID - ATLANTIC
NAVAL INDUSTRIAL RESERVE ORDNANCE PLANT
NAVAL WEAPONS INDUSTRIAL RESERVE PLANT BETHPAGE, NEW YORK
PHASE III - TREATMENT PLANT
MECHANCAL WALL & SLAB PENETRATION DETAILS

SCALE: AS NOTED
EPROJECT NO.: -
CONSTR. CONTR. NO. 112G08005
NAVFAC DRAWING NO. 112G08005
SHEET - OF -
M-504

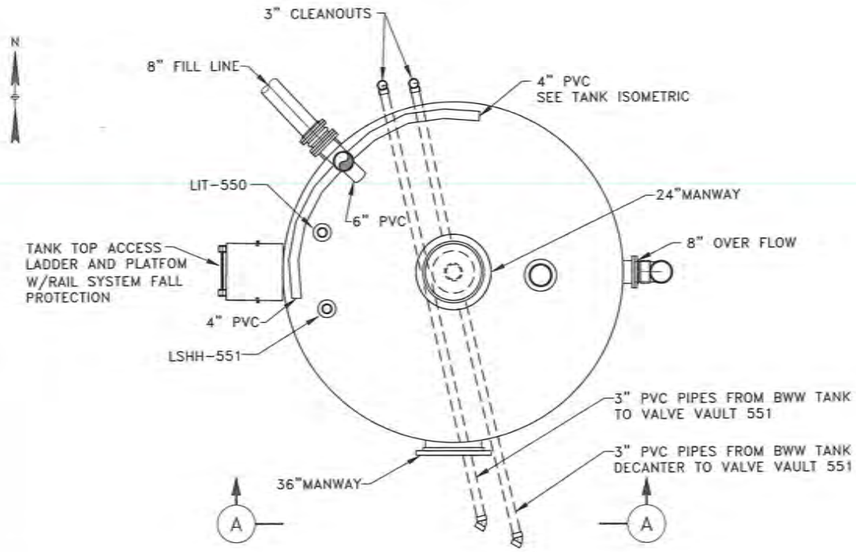

1 BACKWASH WASTE TANK DECANTER PLAN
SCALE: NTS.

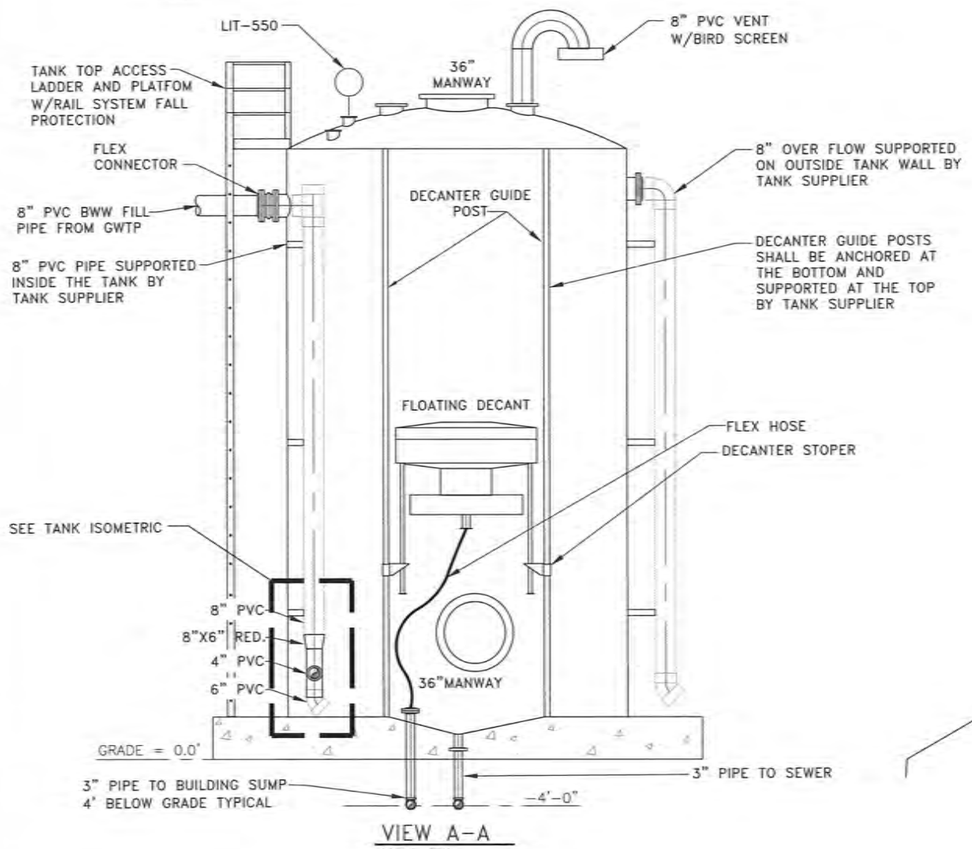

VIEW A-A
SCALE: NTS.

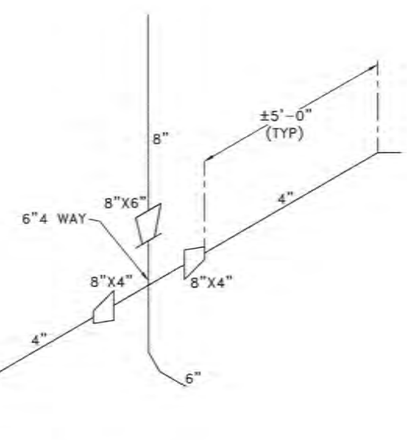

TANK ISOMETRIC
SCALE: NTS.

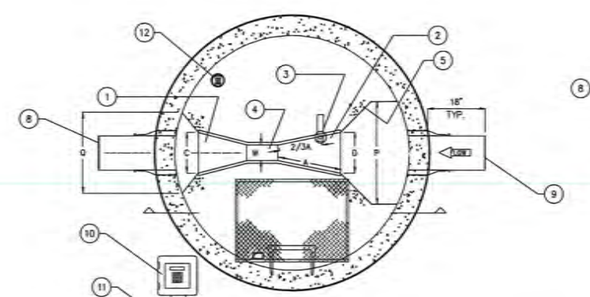

TOP VIEW

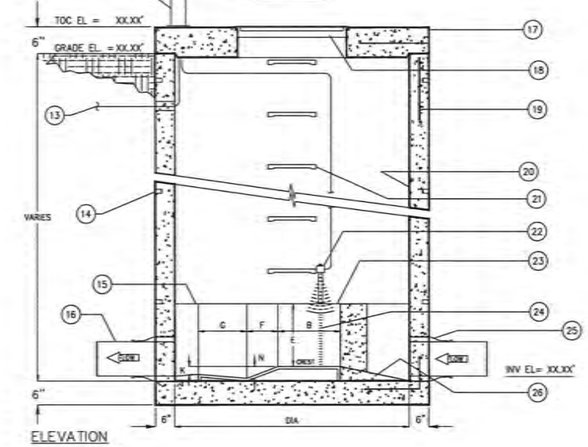

ELEVATION

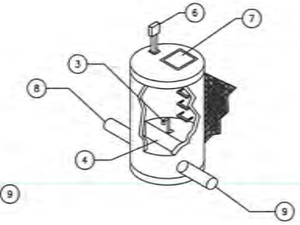

KEYED NOTES		
MARK	QTY	DESCRIPTION
1	1	DIVERGING SECTION
2	1	CONVERGING SECTION
3	2	ULTRASONIC FLOW METER TRANSDUCER
4	2	FLUME THROAT SECTION
5	1	45° WING WALL
6	1	CONTROL PANEL
7	1	HATCHWAY
8	2	WASTEWATER SOURCE
9	2	TO SEWER
10	1	REMOTE ULTRASONIC FLOW TRANSMITTER MOUNTED IN NEMA 4X ENCLOSURE
11	1	ALUM MOUNTING PEDESTAL
12	1	NAMEPLATE INDICATING: MFG: ParkUSA 888-611-PARK MODEL: FLP DATE MANUFACTURED
13	1	120V/20A
14	1	LIFTING LUGS AS REQUIRED
15	1	CONCRETE PLATFORM
16	1	TYPICAL PIPE BY OTHERS
17	1	PRECAST CONCRETE SLAB TOP SEALED w/ PLASTIC FLEXIBLE GASKET MATERIAL
18	1	36" X 36" ALUMINUM HATCHWAY 150 PSF w/TORSION BAR, LOCKING POST & SLAM-LOK
19	2	#5 REBAR @ 11" O.C.E.W. (1) MAT FOR TOP SLAB BAR BENDING & PLACEMENT SHALL COMPLY w/ LATEST ACI STANDARDS
20	1	INTERIOR LINED w/ CORROSION PROTECTION LINER
21	1	OSHA APPROVED STEPS AT 16" O.C.
22	1	ULTRASONIC FLOW METER TRANSDUCER w/ SS MTG BRACKET
23	1	PARSHALL MANHOLE FLUME CONSTRUCTED OF CORROSION RESISTANT MATERIALS, WITH STAFF GAUGE
24	1	STAFF GAUGE
25	1	RESILIANT PIPE CONNECTION (PRESS-SEAL) TYP-2
26	1	SLOPE 1/4 CONTRACTOR TO FIELD VERIFY ALL ELEVATIONS.

MODEL	FLUME SIZE	DIA	MAXIMUM FLOW RATE GPM	MAXIMUM FLOW RATE MGD	W	A	B	C	D	E	F	G	K	N	P	Q
			PARSHALL FLUME DIMENSIONS (in)													
FLP-03	3"	72"	835	1.200	3	18 1/8	18	7	10 9/16	24	6	12	1	2 1/2	30	18

SPECIFICATIONS

CONCRETE : CLASS I/II CONCRETE WITH DESIGN STRENGTH OF 4500 PSI AT 28 DAYS. UNIT IS OF MONOLITHIC CONSTRUCTION AT FLOOR AND FIRST 7 FEET OF RISER. FLAT CONCRETE TOP IS 6" THICK.

REINFORCEMENT: GRADE 60 REINFORCED WITH STEEL REBAR CONFORMING TO ASTM A615 ON REQUIRED CENTERS OR EQUAL.

HATCHWAY: 1/4" ALUMINUM SKID RESISTANT DIAMOND PLATE, WITH 1/4" EXTRUDED ALUMINUM FRAME. HATCH TO BE FURNISHED WITH 316 SS SNAP LOCK & HINGES.

ENGINEERING DATA

FIELD EXCAVATION AND PREPARATION SHALL BE COMPLETED PRIOR TO DELIVERY OF ASSEMBLY. USE DIMENSIONAL DATA AS SHOWN.

2 PARSHALL FLUME DETAIL
SCALE: NTS.

THIS DRAWING PRODUCED ON AUTOCAD DO NOT REVISE MANUALLY.

"THIS DOCUMENT IS THE PROPERTY OF NAVAL FACILITIES ENGINEERING COMMAND, PREPARED BY TETRA TECH ENGINEERING CORPORATION PC, AND IS PROVIDED UPON THE CONDITION THAT IT WILL NOT BE REPRODUCED, COPIED, OR ISSUED TO A THIRD PARTY, AND WILL BE USED SOLELY FOR THE ORIGINAL INTENDED PURPOSE AND SOLELY FOR THE EXECUTION OR REVIEW OF THE ENGINEERING CONSTRUCTION OF THE PROJECT".

IT IS A VIOLATION OF THE NEW YORK STATE EDUCATION LAW, ARTICLE 145, FOR ANY PERSON, UNLESS UNDER THE DIRECTION OF A NEW YORK STATE LICENSED PROFESSIONAL ENGINEER, TO ALTER ANY ITEM ON THIS DOCUMENT IN ANY WAY.

ISSUED FOR BID FEB., 2026

NAVFAC

STATE OF NEW YORK — DONALD DANIEL BRADACK — 080336 — LICENSED PROFESSIONAL ENGINEER — SEAL

TETRA TECH
www.tetratech.com
4433 CORPORATION LANE, SUITE 300
VIRGINIA BEACH, VA 23462
PHONE:(757) 461-2708 FAX: (757) 461-4148
A/E INFO

APPROVED
FOR COMMANDER NAVFAC
ACTIVITY
As per document from Nicole Coward NAVFAC, MIDLANT PLL/EV3
SATISFACTORY TO SAE 03/24/2026
DES DRW CHK
PM/CM
BRANCH MANAGER
CHIEF ENG/ARCH
FIRE PROTECTION

NAVAL FACILITIES ENGINEERING SYSTEMS COMMAND - MID - ATLANTIC
OASB
NAVAL WEAPONS INDUSTRIAL RESERVE PLANT BETHPAGE, NEW YORK
NAVAL INDUSTRIAL RESERVE ORDNANCE PLANT
PHASE III - TREATMENT PLANT
BACKWASH WASTE TANK & PARSHALL FLUME

SCALE: NO SCALE
EPROJECT NO.: -
CONTR. CONTR. NO. 112G08005
NAVFAC DRAWING NO. 112G08005
SHEET - OF -

M-505

PIPE LINE SPECS.

a - - b - - c

A — COMMODITY LIST

- AC – SULFURIC ACID
- BW – BACKWASH WATER
- CA – CAUSTIC
- CAR – CARBON
- CHW – CHILLED WATER
- CON – CONDENSATE
- CTW – COOLING TOWER WATER
- CW – CITY WATER
- DC – DECANT WATER
- DW – DIRTY BACKWASH WATER
- EPDM – ETHYLENE PROPOLENE DIENE MONO
- FW – FIRE WATER
- GW – GROUND WATER
- HC – HYPOCHLORITE
- HP – HYDROGEN PEROXIDE
- MP – MISCELLANEOUS PROCESS
- NG – NATURAL GAS
- N2 – NITROGEN
- OF – OVERFLOW
- PA – COMPRESSED AIR
- PW – POTABLE WATER
- PY – POLYMER
- SL – SLUDGE
- SW – SUMP WATER
- TE – TREATED EFFLUENT
- WW – WASTE WATER
- VA – VAPOR

B — PIPELINE SPECIFICATION OR MATERIAL OF CONSTRUCTION

- CS – CARBON STEEL
- CPVC – CHLORINATED POLYVINYL CHLORIDE
- FH – FLEXIBLE HOSE
- FRE – FIBERGLASS REINFORCED EPOXY
- GS – GALVANIZED STEEL
- HDPE – HIGH DENSITY POLYETHYLENE
- PFA – FLUOROPOLYMER
- PVC – POLYVINYL CHLORIDE
- PVDF – POLYVINYLIDENE FLUORIDE
- SS – 316L STAINLESS STEEL
- TEF – TEFLON

C — PIPE SIZE

(NOMINAL PIPE SIZE IN INCHES)

BOP – BOTTOM OF PIPE

LINE TYPE DESIGNATION

MAJOR PROCESS PIPING	EQUIPMENT
MAJOR EXISTING PROCESS PIPING	EQUIPMENT HIDDEN
MINOR PROCESS PIPING	EQUIPMENT EXISTING
MINOR EXISTING PROCESS PIPING	VENDOR
VAPOR LINE PIPING	AIR STRIPPER EXHAUST

EQUIPMENT NUMBER

A – E-1000 – B

A = EQUIPMENT TYPE B = SEQUENCE NUMBER

- A – AGITATOR, MIXER, BLENDER
- B – BLOWER, FAN, COMPRESSOR, GAS EJECTOR
- C – CONVEYOR, ELEVATOR
- E – EXCHANGER, HEATER, COOLING TOWER, BOILER
- H – HOIST
- M – MILL, GRINDER, EXTRUDER
- P – PUMP, LIQUID EJECTOR
- R – REACTOR
- S – SCREENER, FILTER, CYCLONE, DUST COLLECTOR, STRAINER, THICKENER
- T – TANK, NON-CODE VESSEL, SILO, BIN
- V – VESSEL, TOWER, DRUM
- X – MISCELLANEOUS, EQUIPMENT

INSULATION DESIGNATION

INSULATED PIPING

X/Y

X = INSULATION TYPE /
Y = THICKNESS

TRACED AND INSULATED PIPING

X/Y/Z

X = INSULATION TYPE /
Y = THICKNESS
Z = TYPE OF TRACE

JACKETED PIPING

JX

JACKET SIZE ONE SIZE LARGER THAN INNER PIPE

INSULATED EQUIPMENT

X = INSULATION TYPE
- C = CALCIUM SILICATE
- F = FIBERGLAS
- M = MINERAL WOOL
- G = FOAMGLASS
- N = NEOPRENE

Z = TRACING TYPE
- E = ELECTRIC
- O = HOT OIL
- S = STEAM
- W = HOT WATER

VALVE SYMBOLS

- GATE
- GLOBE
- BALL
- PLUG
- CHECK
- NOTE: BFPA = BACKFLOW PREVENTER ASSY.
- BUTTERFLY
- NEEDLE
- ANGLE
- 3 WAY
- 4 WAY
- DRAIN
- VENT
- DIAPHRAGM
- PINCH
- CHOKE
- DUO CHECK
- COCK
- VALVE PLUG
- VALVE HANDLE
- FLOAT
- Y
- QUICK-OPEN GATE
- QUICK-OPEN GLOBE
- SLIDE VALVE
- PNEUMATIC

TYPICAL VALVE TAG

a — VALVE TAG NO.
NC

NC = NORMALLY CLOSED
LC = LOCKED CLOSED

PUMPS & BLOWERS

- CENTRIFUGAL PUMP HORIZONTAL & VERTICAL
- DIRECT COUPLED PUMP
- AIR DRIVEN DUAL DIAPHRAGM PUMP
- METERING PUMP
- DRUM PUMP
- RECIPROCATING PUMP
- AIR COMPRESSOR
- VACUUM PUMP
- MIXING NOZZLE
- MOTOR DRIVEN THREE STAGE COMPRESSOR
- WELL PUMP
- AIR DRIVEN DIAPHRAGM PUMP
- INLINE PUMP
- VERTICAL PUMP
- CENTRIFUGAL BLOWER
- ROTARY BLOWER/ COMPRESSOR
- PISTON COMPRESSOR
- EJECTOR
- DUAL DRIVE SINGLE STAGE COMPRESSOR

DRIVERS

- MOTOR
- TURBINE
- PISTON

MISCELLANEOUS EQUIPMENT

- EXTRUDER
- FUNNEL
- ROLLER MILL
- CYCLONE
- BALL MILL
- JAW/HAMMER MILL
- SUPPORT
- EMERGENCY GENERATOR

DRUMS & TOWERS

- ASME DRUM
- PACKED TOWER
- DRUM WITH DISHED HEADS
- DRUM WITH BULLET HEADS
- DRUM WITH DEMISTER

EXCHANGERS

- HT. EXCH.
- DOUBLE PIPE
- AIR-EXCHANGER
- FURNACE
- COOLING TOWER
- TEMA E
- TEMA F
- TEMA G
- TEMA H
- TEMA J & X
- TEMA K
- TEMA EU
- A
- B
- C
- N

MIXERS & AGITATORS

- AGITATOR HEAD
- STATIC MIXER
- PROPELLER
- PITCHED BLADE
- ANCHOR
- RADIAL
- DISPERSER

CONVEYORS

- BELT CONVEYOR
- SCREW CONVEYOR/FEEDER
- BUCKET ELEV
- VIBRATION SCREENER

FILTERS & THICKENERS

- LEAF FILTER
- DRUM FILTER
- CARTRIDGE FILTER
- GRAVITY THICKENER
- BAG HOUSE
- GAF FILTER
- PRESS FILTER
- CUNO FILTER
- SINGLE OR DOUBLE BAG FILTER

MISCELLANEOUS SYMBOLS

- EXPANSION JOINT
- IN-LINE FLEXIBLE HOSE
- FLEXIBLE HOSE
- HOSE CONNECTION (MALE)
- HOSE CONNECTION (FEMALE)
- PIPE CAP
- SWIVEL
- TEMPORARY STRAINER
- Y – STRAINER
- Y – STRAINER w/VALVE
- Y – STRAINER w/BALL VALVE
- PULSATION DAMPENER
- TP # TIE-POINT
- DP # DISMANTLE POINT
- T STEAM TRAP
- DRAIN
- SIGHT GLASS
- GAGE GLASS INTEGRALLY MOUNTED TO TANK
- S.C. SAMPLE CONNECTION
- CA/FC COMPRESSED AIR/ FLUSH CONNECTION
- EXPANSION COUPLING
- UNION
- PULSATION DAMPENER
- BASKET STRAINER
- BASKET STRAINER w/VALVE
- FILTER
- MANWAY
- COUPLING
- NOZZLE
- NOZZLE
- REDUCER – CONC.
- REDUCER – ECC.
- ELECTRONIC BREAK
- PIPE BREAK
- ARROW
- ARROW
- FLOOR
- F R L FILTER/REGULATOR/ LUBRICATOR
- NC SP PROCESS SAMPLE PORT
- FC FLUSH CONNECTION
- A AIR CONNECTION
- W WATER CONNECTION

DWG. NO. — SIZE COMMODITY FROM DESCRIPTION

FROM ARROW

COMMODITY SIZE TO DESCRIPTION — DWG. NO.

TO ARROW

SIZE COMMODITY FROM DESCRIPTION

FROM COMMODITY

COMMODITY SIZE TO DESCRIPTION

TO COMMODITY

THIS DRAWING PRODUCED ON AUTOCAD DO NOT REVISE MANUALLY

"THIS DOCUMENT IS THE PROPERTY OF NAVAL FACILITIES ENGINEERING COMMAND, PREPARED BY TETRA TECH ENGINEERING CORPORATION PC, AND IS PROVIDED UPON THE CONDITION THAT IT WILL NOT BE REPRODUCED, COPIED, OR ISSUED TO A THIRD PARTY, AND WILL BE USED SOLELY FOR THE ORIGINAL INTENDED PURPOSE AND SOLELY FOR THE EXECUTION OR REVIEW OF THE ENGINEERING CONSTRUCTION OF THE PROJECT".

IT IS A VIOLATION OF THE NEW YORK STATE EDUCATION LAW, ARTICLE 145, FOR ANY PERSON, UNLESS UNDER THE DIRECTION OF A NEW YORK STATE LICENSED PROFESSIONAL ENGINEER, TO ALTER AN ITEM ON THIS DOCUMENT IN ANY WAY.

NO.	DESCRIPTION	DATE	APPR

NAVFAC

STATE OF NEW YORK — JOHN DANIEL BEACHAM — 080336 — LICENSED PROFESSIONAL ENGINEER — SEAL

TETRA TECH
www.tetratech.com
4433 CORPORATION LANE, SUITE 300
VIRGINIA BEACH, VA 23462
PHONE: (757) 461-3768 FAX: (757) 461-4148
A/E INFO

APPROVED
FOR COMMANDER NAVFAC

ACTIVITY: As per document from Nicole Coward NAVFAC. MIDLANT PLL/EV3

SUBSEQUENT TO DATE 03/24/2026

DES	HKM	DRW	KW	CHK	HKM

PM/DM
BRANCH MANAGER
CHIEF ENG/ARCH
FIRE PROTECTION

DEPARTMENT OF THE NAVY
NAVAL FACILITIES ENGINEERING COMMAND
NAVAL FACILITIES ENGINEERING SYSTEMS COMMAND - MID - ATLANTIC
NAVAL INDUSTRIAL RESERVE ORDNANCE PLANT
NAVAL WEAPONS INDUSTRIAL RESERVE PLANT BETHPAGE, NEW YORK
PHASE III - TREATMENT PLANT

MECHANICAL LEGEND SHEET

SCALE: AS NOTED
EPROJECT NO.:
CONSTR. CONTR. NO. 112G08005
NAVFAC DRAWING NO.
SHEET OF
GM001

DRAWFORM REVISION: 07 AUG 2018

ISSUED FOR BID FEB., 2026

CAUTION-IF SHEET IS LESS THAN 34"x22" USE GRAPHIC SCALE

FUNCTION IDENTIFICATION LETTER CODE
(FOR NEW INSTRUMENT TAGS)

	FIRST LETTER		SUCCEEDING LETTERS		
	MEASURED VARIABLE	MODIFIER	PASSIVE FUNCTION	OUTPUT FUNCTION	MODIFIER
A	ANALYSIS		ALARM		
B	BURNER, COMBUSTION				
C	USER'S CHOICE			CONTROL	CLOSED, CONTROL
D	DENSITY	DIFFERENTIAL			
E	VOLTAGE		SENSOR (ELEMENT)		
F	FLOW	RATIO (FRACTION)			FORWARD
G	USER'S CHOICE		GLASS; VIEWING DEVICE		
H	HAND (MANUAL)				HIGH
I	CURRENT (ELECTRICAL)		INDICATE	INDICATE	INDICATE
J	POWER	SCAN			
K	TIME, TIME SCHEDULE	TIME RATE OF CHANGE		CONTROL STATION	
L	LEVEL		LIGHT		LOW
M	MOISTURE/HUMIDITY	MOMENTARY			MIDDLE, INTERMEDIATE
N	USER'S CHOICE				
O	OPERATION		ORIFICE, RESTRICTION		OPENED, ON
P	PRESSURE, VACUUM		TEST POINT		
Q	QUANTITY	INTEGRATE, TOTALIZE			
R	RADIATION		RECORD		REVERSE
S	SPEED, FREQUENCY	SAFETY	SET POINT	SWITCH	
T	TEMPERATURE			TRANSMIT	
U	MULTIVARIABLE		MULTIFUNCTION	MULTIFUNCTION	MULTIFUNCTION
V	VIBRATION, MECHANICAL ANALYSIS			VALVE, DAMPER, LOUVER	
W	WEIGHT, FORCE		WELL		
X	UNCLASSIFIED	X AXIS	UNCLASSIFIED	UNCLASSIFIED	UNCLASSIFIED
Y	EVENT, PRESENCE, MOTOR	Y AXIS		RELAY, COMPUTE, CONVERT	
Z	POSITION, DIMENSION	Z AXIS		DRIVER, ACTUATOR	

DEVICES

		AUX PANEL	VENDOR
LOCALLY MOUNTED	??		??
EXTERNALLY PANEL MOUNTED	??	??	??
INTERNALLY PANEL MOUNTED	??	??	??
LOCALLY MOUNTED LIGHT	??		??
PANEL MOUNTED LIGHT	??	??	??

FUNCTION SYMBOLS

	PLC	DCS
DISPLAYED ON CRT	??	??
BLIND FUNCTION	??	??
MANUAL BACKUP		??
REAR PANEL (INACCESSIBLE)	??	??

FUNCTION IDENTIFICATION

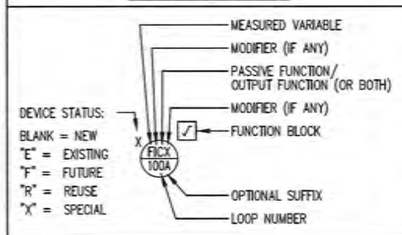

= CONVERTER (SEE OPTION LEGEND BELOW)

THE FORM OF THE OUTPUT SIGNAL IS DIFFERENT FROM THAT OF THE INPUT.

POSSIBLE OPTIONS
- A = ANALOG
- B = BINARY
- D = DIGITAL
- E = VOLTAGE
- F = FIBER OPTIC
- H = HYDRAULIC
- I = CURRENT
- O = ELECTROMAGNETIC, SONIC
- P = PNEUMATIC
- R = RESISTANCE (ELECTRIC)

FUNCTION BLOCKS

S_T = START	Σ = SUMMATION
S_P = STOP	X = MULTIPLY
S_S = START / STOP	÷ = DIVIDE
I–O = ON / OFF	√ = SQUARE ROOT
A_M = AUTO / MANUAL	% = GAIN OR ATTENUATE / RATIO
H_O_A = HAND / OFF / AUTO	∫ = INTEGRAL
> = HIGH LIMIT	Δ = DIFFERENTIAL
< = LOW LIMIT	Σ/n = AVERAGE
> = HIGH SELECT	± = BIAS
< = LOW SELECT	1:1 = BOOST
% = CONVERTER	f(t) = TIME FUNCTION
J_O = JOG	f(x) = USER DEFINED
J_O_A = JOG / OFF / AUTO	

INSTRUMENT LINE DESIGNATION

- PNEUMATIC SIGNAL
- CAPILLARY TUBING
- ELECTRIC SIGNAL
- MECHANICAL LINK
- SOFTWARE OR DATA LINK
- ELECTROMAGNETIC OR SONIC (GUIDED)
- ELECTROMAGNETIC OR SONIC (NOT GUIDED)
- HYDRAULIC SIGNAL

ACTUATOR SYMBOLS

- IA — DIAPHRAGM
- PRESSURE BAL. DIAPHRAGM
- IA — DIAPHRAGM WITH ELECTRO/PNEUMATIC ACTUATOR
- CYLINDER W/LIMIT SWITCHES
- M — ROTARY MOTOR
- S — SOLENOID WITH LATCH
- PRESSURE OR VACUUM RELIEF
- E/H — ELECTRO-HYDRAULIC
- PRESSURE REG. SELF-CONTAINED
- BACK PRESSURE REG. W/EXT. PRESSURE TAP
- S — SOLENOID
- S — 3-WAY SOLENOID
- S — 4-WAY SOLENOID
- S S — DUAL SOLENOID

MISCELLANEOUS SYMBOLS

- IA — INSTRUMENT AIR
- R — RESET
- I? — HARD-WIRED INTERLOCK FUNCTION
- I? — SOFTWARE INTERLOCK FUNCTION
- P — INSTRUMENT PURGE
- ILLUMINATOR
- DIAPHRAGM SEAL
- ?? — COMPUTER FUNCTION
- A — FACILITY ALARM
- F R L — FILTER-REGULATOR-LUBRICATOR

PRESSURE DEVICES

- PI 1 / PI 2 — DIRECT CONN. — PRESSURE INDICATOR / STEAM SIPHON
- PI 3 — PRESSURE IND. CONNECTED TO DIAPHRAGM SEAL
- PSET VSET PSV 4 — PRESSURE & VACUUM RELIEF VALVE
- PSET VSET PSV 5 — TANK — PRESSURE & VACUUM RELIEF MANHOLE COVER
- P SET PSV 6 — PRESSURE RELIEF OR SAFETY VALVE
- V SET PSV 7 — VACUUM RELIEF VALVE
- P PSV 8 — PILOT OPERATED RELIEF VALVE
- P PSV 9 — PILOT OPERATED RELIEF VALVE W/MANUAL UNLOADER
- PSE 10 PSET — RUPTURE DISK OR SAFETY HEAD FOR PRESSURE RELIEF
- PSE 11 VSET — RUPTURE DISK OR SAFETY HEAD FOR VACUUM RELIEF
- PCV 12 — PRESSURE REDUCING REG. SELF-CONTAINED
- PCV 13 — BACK-PRESSURE REG. SELF-CONTAINED
- PCV 14 — PRESSURE REDUCING REG. W/EXT. PRESSURE TAP
- PCV 15 — BACK-PRESSURE REDUCING REG. W/EXT. PRESSURE TAP

VALVE STATUS

- FC : FAIL CLOSED
- FO : FAIL OPEN
- FL : FAIL LAST
- NO : NORMALLY OPEN
- NC : NORMALLY CLOSED
- CSO : CAR SEAL OPENED
- CSC : CAR SEAL CLOSED

FLOW DEVICES

- FE 1 — GENERAL SYMBOL
- FE 2 — ORIFICE PLATE
- FE 3 — FLOW STRAIGHTENING VANE
- FE 4 — ORIFICE PLATE IN QUICK-CHANGE FITTING
- FE 5 — VENTURI TUBE
- FE 6 — AVERING PITOT TUBE
- FE 7 — NOZ
- FE 8 — TURBINE OR PROPELLER TYPE
- FE 9 — POSITIVE DISPLACEMENT TYPE
- FE 10 — VORTEX SENSOR
- FE 11 — FLOW NOZZLE
- FE 12 — M — MAGNETIC FLOWMETER
- FE 13 — FLUME
- FE 14 — SINGLE PORT PITOT TUBE OR PITOT VENTURI TUBE
- FT 17 / FE 17 — ORIFICE PLATE WITH DP TRANSMITTER
- FI 16 — VARIABLE AREA FLOW INDICATOR
- FO 18 — RESTRICTING ORIFICE PLATE
- FE 19 — TARGET TYPE SENSOR
- FE 20 — CORIOUS METER
- FE 21 — WEDGE FLOW ELEMENT
- M — TURBINE METER (LOCAL)

LEVEL DEVICES

- TANK LG 1 — GAGE GLASS, INTEGRALLY MOUNTED ON TANK
- TANK LG 2 — GAGE GLASS, EXTERNALLY CONNECTED
- TANK LI 3 — LEVEL INDICATOR WITH TWO CONNECTIONS
- SUB LE 4 — SUBMERSIBLE TYPE LEVEL ELEMENT
- LIT 5 LE 5 ULT — ULTRASONIC TYPE LEVEL ELEMENT
- LIT 6 LE 6 RADAR — RADAR TYPE LEVEL ELEMENT
- LS 7 CAP — CAPACITANCE TYPE LEVEL SWITCH
- LE 8 TUN — TUNING FORK TYPE LEVEL ELEMENT
- TANK LG 9 — LEVEL GLASS WITH ILLUMINATOR
- LI 10 TANK — LOCAL FLOAT TYPE LEVEL INDICATOR
- TANK LE 7 — TOP MOUNTED LEVEL ELEMENT

ALARM DEVICES

- LAHH 1, LAH 2, LAL 3, LALL 4 — SEPARATE ALARMS FOR ABNORMAL LEVEL – VERY HIGH, HIGH, LOW & VERY LOW
- TSH 5, TSL 5, TAHL 5 — COMMON ALARM ANNUNCIATOR FOR HIGH & LOW TEMPERATURE

BURNER DEVICE

- BSE 1 — 1. REFERENCE INSTRUMENT FLAME ARRESTER

THIS DRAWING PRODUCED ON AUTOCAD. DO NOT REVISE MANUALLY

THIS DOCUMENT IS THE PROPERTY OF NAVAL FACILITIES ENGINEERING COMMAND, PREPARED BY TETRA TECH ENGINEERING CORPORATION PC, AND IS PROVIDED UPON THE CONDITION THAT IT WILL NOT BE REPRODUCED, COPIED, OR ISSUED TO A THIRD PARTY, AND WILL BE USED SOLELY FOR THE ORIGINAL INTENDED PURPOSE AND SOLELY FOR THE EXECUTION OR REVIEW OF THE ENGINEERING CONSTRUCTION OF THE PROJECT.

IT IS A VIOLATION OF THE NEW YORK STATE EDUCATION LAW, ARTICLE 145, FOR ANY PERSON, UNLESS UNDER THE DIRECTION OF A NEW YORK STATE LICENSED PROFESSIONAL ENGINEER, TO ALTER AN ITEM ON THIS DOCUMENT IN ANY WAY.

ISSUED FOR BID FEB., 2026

NAVFAC

STATE OF NEW YORK — DANIEL BANCK — 080336 — LICENSED PROFESSIONAL ENGINEER — SEAL

TETRA TECH
www.tetratech.com
4430 CORPORATION LANE, SUITE 300
VIRGINIA BEACH, VA 23462
PHONES: (757) 461-2768 FAX: (757) 461-4148
A/E INFO

APPROVED: FOR COMMANDER NAVFAC

ACTIVITY: As per document from Nicole Coward NAVFAC, MIDLANT PLL/EV3

SUBMISSION TO: SUBE 03/24/2026

DES: HRM | DRW: KW | CHK: HRM

PM/DM:

BRANCH MANAGER:

CHIEF ENG/ARCH:

FIRE PROTECTION:

NAVAL FACILITIES ENGINEERING SYSTEMS COMMAND - MID - ATLANTIC
NAVAL INDUSTRIAL RESERVE ORDNANCE PLANT
NAVAL WEAPONS INDUSTRIAL RESERVE PLANT BETHPAGE, NEW YORK
PHASE III - TREATMENT PLANT
MECHANICAL LEGEND SHEET

GM38

SCALE: AS NOTED

EPROJECT NO.:

CONSTR. CONTR. NO. 112G08005

NAVFAC DRAWING NO.

SHEET OF

GM-002

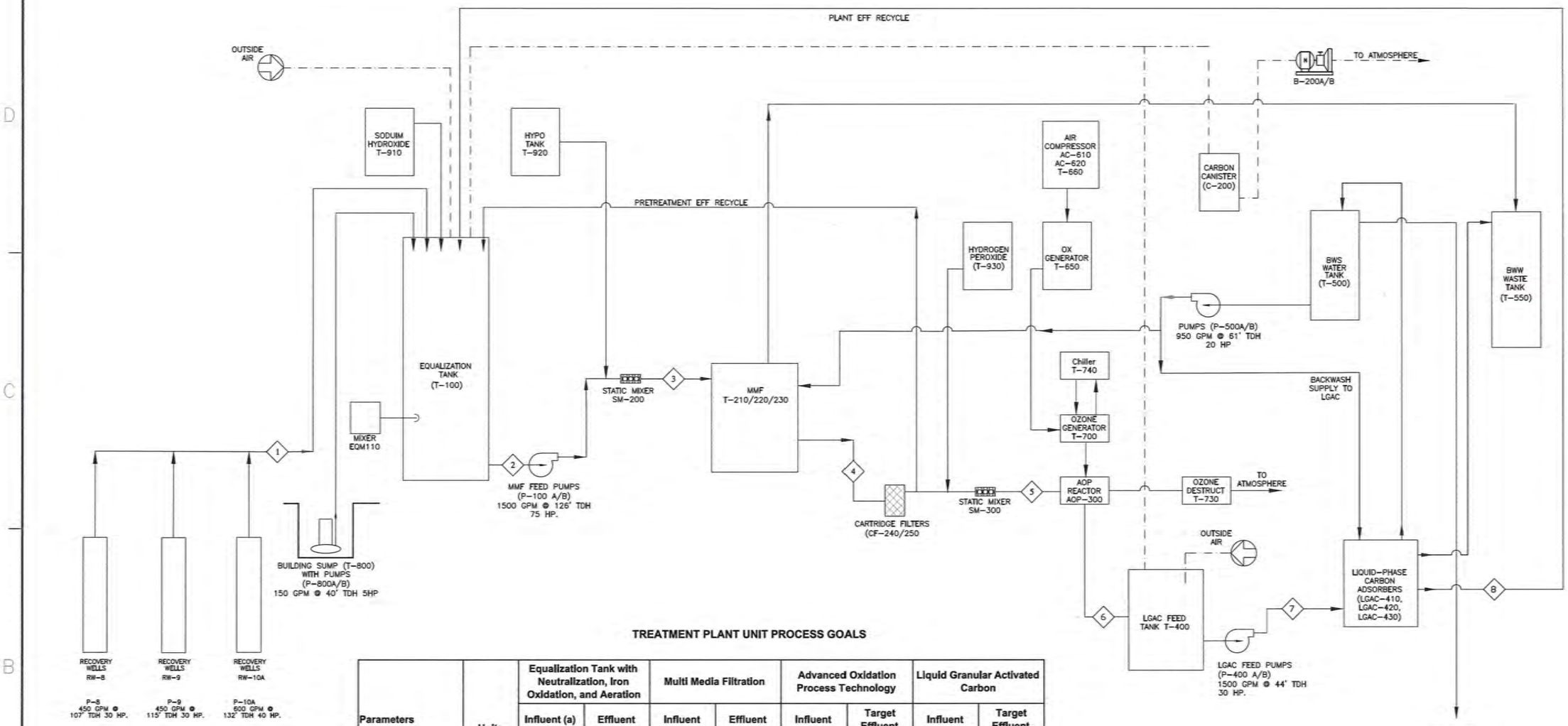

TREATMENT PLANT UNIT PROCESS GOALS

Parameters	Units	Equalization Tank with Neutralization, Iron Oxidation, and Aeration		Multi Media Filtration		Advanced Oxidation Process Technology		Liquid Granular Activated Carbon	
		Influent (a)	Effluent	Influent	Effluent	Influent	Target Effluent	Influent	Target Effluent
Organics		1	2	3	4	5	6	7	8
Trichloroethene	ug/L	1.8/5	<5	<5	<5	<5	<1	<1	<1
Tetrachloroethene	ug/L	ND/1	<1	<1	<1	<1	<1	<1	<1
Freon 113	ug/L	ND/0.5	<1	<1	<1	<1	<1	<1	<1
1,1-Dichloroethene	ug/L	ND/0.5	<1	<1	<1	<1	<1	<1	<1
cis-1,2-Dichloroethene	ug/L	ND/0.5	<1	<1	<1	<1	<1	<1	<1
1,4-Dioxane	ug/L	0.5/1.5	0.5/1.5	0.5/1.5	0.5/1.5	0.5/1.5	0.1 to 0.3	0.1 to 0.3	0.1 to 0.3
Inorganics									
Iron - dissolved	mg/L	1.5/2.5	<0.3	<0.3	<0.3	<0.3	<0.3	<0.3	<0.3
Iron - total	mg/L	1.5/2.5	1.5/2.5	1.5/2.5	<0.3	<0.3	<0.3	<0.3	<0.3
Suspended Solids	mg/L	<1	3 to 5	3 to 5	<1	<1	<1	<1	<1
Ozone	mg/L	<0.1	<0.1	<0.1	<0.1	6	2	2	<0.1
Hydrogen Peroxide	mg/L	<0.1	<0.1	<0.1	<0.1	6	2	2	<0.1
Sodium Hypochorite	mg/L	<0.1	<0.1	1 to 2	<1	<1	<1	<1	<0.1
pH	Standard Unit	4.5 to 5.5	6.8 to 7.2	6.8 to 7.2	6.8 to 7.2	6.8 to 7.2	6.8 to 7.2	6.8 to 7.2	6.8 to 7.2

(a) Average/maximum.

< - Less than.

µg/L - Microgram per liter.

mg/L - Milligram per liter.

Flow Rate - 1500

ISSUED FOR BID FEB., 2026

THIS DRAWING PRODUCED ON AUTOCAD DO NOT REVISE MANUALLY

"THIS DOCUMENT IS THE PROPERTY OF NAVAL FACILITIES ENGINEERING COMMAND, PREPARED BY TETRA TECH ENGINEERING CORPORATION PC, AND IS PROVIDED UPON THE CONDITION THAT IT WILL NOT BE REPRODUCED, COPIED, OR ISSUED TO A THIRD PARTY, AND WILL BE USED SOLELY FOR THE ORIGINAL INTENDED PURPOSE AND SOLELY FOR THE EVALUATION OR REVIEW OF THE ENGINEERING CONSTRUCTION OF THE PROJECT".

IT IS A VIOLATION OF THE NEW YORK STATE EDUCATION LAW, ARTICLE 145, FOR ANY PERSON, UNLESS UNDER THE DIRECTION OF A NEW YORK STATE LICENSED PROFESSIONAL ENGINEER, TO ALTER AN ITEM ON THIS DOCUMENT IN ANY WAY.

NAVFAC

STATE OF NEW YORK — RICHARD DANIEL BRANACH — 080336 — LICENSED PROFESSIONAL ENGINEER

TETRA TECH
www.tetratech.com
4433 CORPORATION LANE, SUITE 300
VIRGINIA BEACH, VA 23462
PHONE: (757) 461-3768 FAX: (757) 461-4149
A/E INFO

APPROVED

FOR COMMANDER NAVFAC

ACTIVITY: As per document from Nicole Coward NAVFAC. MIDLANT PLL/EV3

SATISFACTORY TO DATE 03/24/2026

DES HKM DRW KW CHK NS

PM/CM

BRANCH MANAGER

CHIEF ENG/ARCH

FIRE PROTECTION

NAVAL FACILITIES ENGINEERING SYSTEMS COMMAND - MID - ATLANTIC

NAVAL WEAPONS INDUSTRIAL RESERVE PLANT BETHPAGE, NEW YORK

NAVAL INDUSTRIAL RESERVE ORDNANCE PLANT

PHASE III - TREATMENT PLANT

PROCESS FLOW DIAGRAM

SCALE: AS NOTED

E-PROJECT NO.:

CONSTR. CONTR. NO. 112G08005

NAVFAC DRAWING NO. ##

SHEET OF

MI601

CAUTION! SHEET IS LESS THAN 24"x36" USE GRAPHIC SCALE

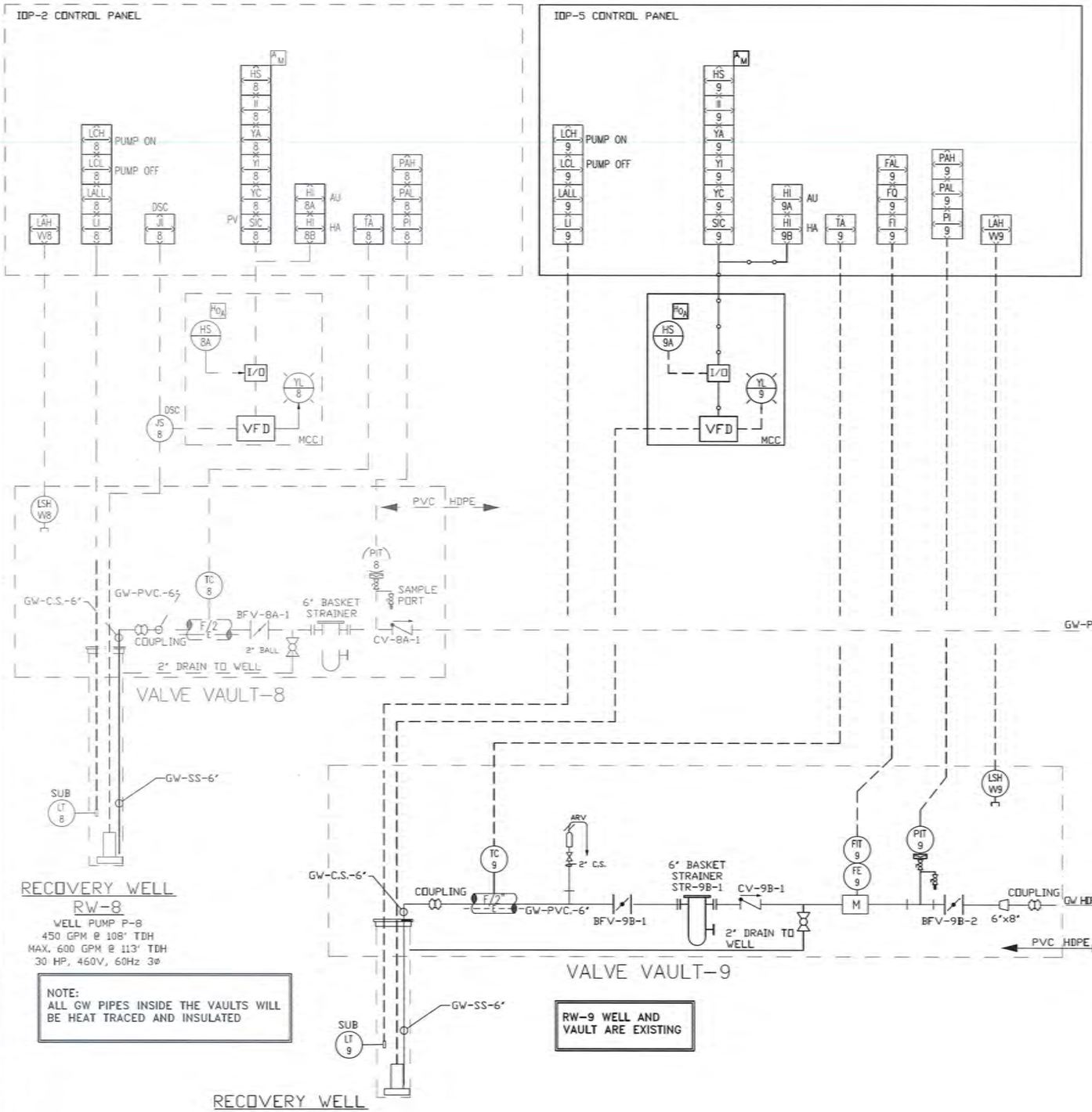

LEGEND:

EXISTING:

I&C NEW SOW:

PIPING NEW SOW:

NAVFAC

STATE OF NEW YORK — LICENSED PROFESSIONAL ENGINEER

TETRA TECH

NAVAL FACILITIES ENGINEERING SYSTEMS COMMAND - MID - ATLANTIC
NAVAL INDUSTRIAL RESERVE ORDNANCE PLANT
NAVAL WEAPONS INDUSTRIAL RESERVE PLANT BETHPAGE, NEW YORK
PHASE III - TREATMENT PLANT
RECOVERY WELL RW-8 AND RW-9

As per document from Nicole Coward
NAVFAC. MIDLANT PLL/EV3
03/24/2026

SCALE: AS NOTED
CONTR. CONTR. NO. 112G08005
SHEET MI602

ISSUED FOR BID FEB., 2026

THIS DRAWING PRODUCED ON AUTOCAD DO NOT REVISE MANUALLY

"THIS DOCUMENT IS THE PROPERTY OF NAVAL FACILITIES ENGINEERING COMMAND, PREPARED BY TETRA TECH ENGINEERING CORPORATION PC, AND IS PROVIDED UPON THE CONDITION THAT IT WILL NOT BE REPRODUCED, COPIED, OR ISSUED TO A THIRD PARTY, AND WILL BE USED SOLELY FOR THE ORIGINAL INTENDED PURPOSE AND SOLELY FOR THE EXECUTION OR REVIEW OF THE ENGINEERING CONSTRUCTION OF THE PROJECT".

IT IS A VIOLATION OF THE NEW YORK STATE EDUCATION LAW, ARTICLE 145, FOR ANY PERSON UNLESS UNDER THE DIRECTION OF A NEW YORK STATE LICENSED PROFESSIONAL ENGINEER, TO ALTER AN ITEM ON THIS DOCUMENT IN ANY WAY.

CAUTION: IF SHEET IS LESS THAN 34"x22" USE GRAPHIC SCALE

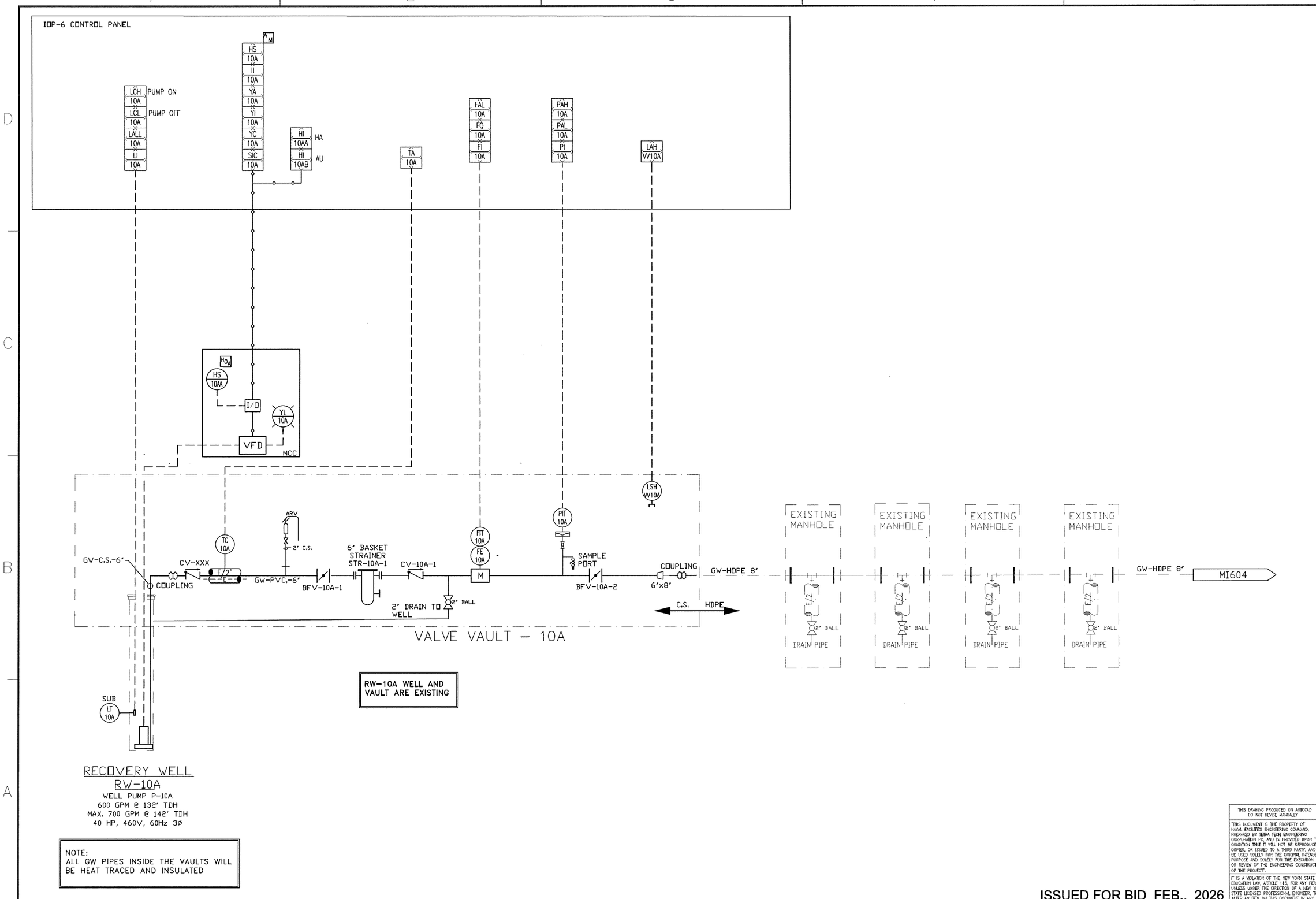

ISSUED FOR BID FEB., 2026

CAUTION: IF SHEET IS LESS THAN 34"x22" USE GRAPHIC SCALE

THIS DRAWING PRODUCED ON AUTOCAD DO NOT REVISE MANUALLY

"THIS DOCUMENT IS THE PROPERTY OF NAVAL FACILITIES ENGINEERING COMMAND, PREPARED BY TETRA TECH ENGINEERING CORPORATION PC, AND IS PROVIDED UPON THE CONDITION THAT IT WILL NOT BE REPRODUCED, COPIED, OR ISSUED TO A THIRD PARTY, AND WILL BE USED SOLELY FOR THE ORIGINAL INTENDED PURPOSE AND SOLELY FOR THE EXECUTION OR REVIEW OF THE ENGINEERING CONSTRUCTION OF THE PROJECT."

IT IS A VIOLATION OF THE NEW YORK STATE EDUCATION LAW, ARTICLE 145, FOR ANY PERSON, UNLESS UNDER THE DIRECTION OF A NEW YORK STATE LICENSED PROFESSIONAL ENGINEER, TO ALTER AN ITEM ON THIS DOCUMENT IN ANY WAY.

NAVFAC

STATE OF NEW YORK — DAVID DANIEL BRAPPLER — 080336 — LICENSED PROFESSIONAL ENGINEER — SEAL

TETRA TECH
www.tetratech.com
4433 CORPORATION LANE, SUITE 300
VIRGINIA BEACH, VA 23462
PHONE: (757) 461-3768 FAX: (757) 461-4148
A/E INFO

APPROVED
FOR COMMANDER NAVFAC
ACTIVITY
As per document from Nicole Coward
NAVFAC, MIDLANT PLL/EV3
SATISFACTORY TO DATE 03/24/2026
DES | DRW | CHK
PM/DIM
BRANCH MANAGER
CHIEF ENG/ARCH
FIRE PROTECTION

GMUS NAVAL FACILITIES ENGINEERING SYSTEMS COMMAND - MID - ATLANTIC
NAVAL INDUSTRIAL RESERVE ORDNANCE PLANT
NAVAL WEAPONS INDUSTRIAL RESERVE PLANT BETHPAGE, NEW YORK
PHASE III - TREATMENT PLANT
RECOVERY WELL RW-10A

SCALE: AS NOTED
EPROJECT NO.
CONSTR. CONTR. NO. 112G08005
NAVFAC DRAWING NO.
SHEET # OF #
MI603

FILE NAME: C:\Projects\Phase -3\Drawings\Process\PID_.dwg LAYOUT NAME: PID-MI603 PLOTTED: Wednesday, April 22, 2026 - 3:50pm USER: KEVIN.WAKE

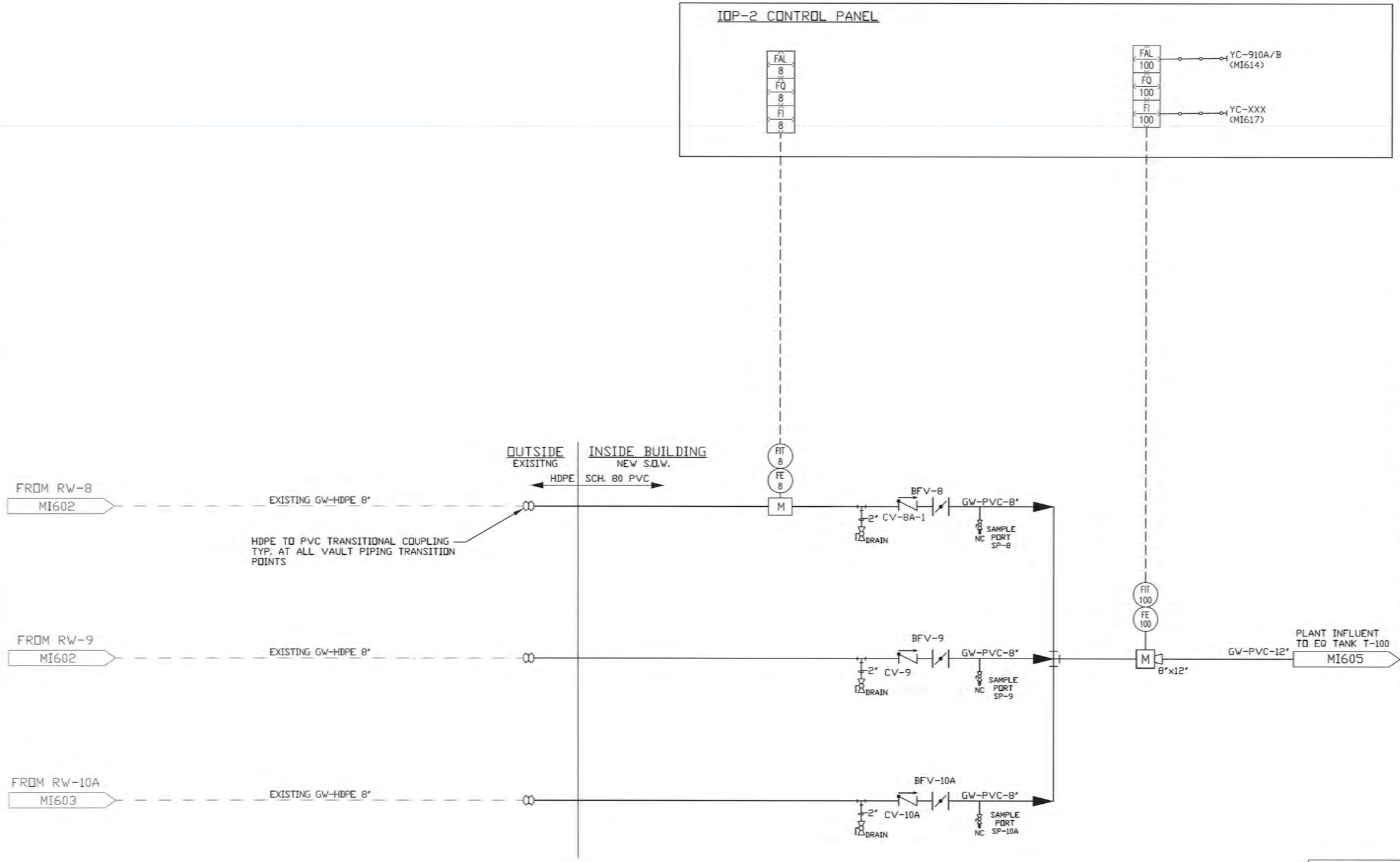

NAVFAC

STATE OF NEW YORK
DAVID DANIEL BARACK
080936
LICENSED PROFESSIONAL ENGINEER

TETRA TECH
www.tetratech.com
4433 CORPORATION LANE, SUITE 300
VIRGINIA BEACH, VA 23462
PHONE: (757) 461-3768 FAX: (757) 461-4148
A/E INFO

APPROVED
FOR COMMENT MARK
ACTION
As per document from Nicole Coward NAVFAC, MIDLANT PLL/EV3
SUBMITTED TO DATE 03/24/2026
DES -- DRW -- CHK --
PM/DM
BRANCH MANAGER
CHIEF ENG/ARCH
FIRE PROTECTION

NAVAL FACILITIES ENGINEERING SYSTEMS COMMAND - MID - ATLANTIC
NAVAL INDUSTRIAL RESERVE ORDNANCE PLANT
NAVAL WEAPONS INDUSTRIAL RESERVE PLANT BETHPAGE, NEW YORK
PHASE III - TREATMENT PLANT
PLANT INFLUENT TO EQ TANK

SCALE: AS NOTED
EPROJECT NO.: -
CONSTR. CONTR. NO. 112G08005
NAVFAC DRAWING NO. ##
SHEET OF -
MI604

THIS DRAWING PRODUCED ON AUTOCAD DO NOT REVISE MANUALLY

"THIS DOCUMENT IS THE PROPERTY OF NAVAL FACILITIES ENGINEERING COMMAND, PREPARED BY TETRA TECH ENGINEERING CORPORATION PC, AND IS PROVIDED UPON THE CONDITION THAT IT WILL NOT BE REPRODUCED, COPIED, OR ISSUED TO A THIRD PARTY, AND WILL BE USED SOLELY FOR THE ORIGINAL INTENDED PURPOSE AND SOLELY FOR THE EXECUTION OR REVIEW OF THE ENGINEERING CONSTRUCTION OF THE PROJECT."

IT IS A VIOLATION OF THE NEW YORK STATE EDUCATION LAW, ARTICLE 145, FOR ANY PERSON, UNLESS UNDER THE DIRECTION OF A NEW YORK STATE LICENSED PROFESSIONAL ENGINEER, TO ALTER AN ITEM ON THIS DOCUMENT IN ANY WAY.

ISSUED FOR BID FEB., 2026

CAUTION: IF SHEET IS LESS THAN 24"x36" USE GRAPHIC SCALE

FILE NAME: C:\Projects\Phase -3\Drawings\Process\PID_.dwg LAYOUT NAME: PID-MI604 PLOTTED: Wednesday, April 22, 2026 - 3:51pm USER: KEVIN.WAKE

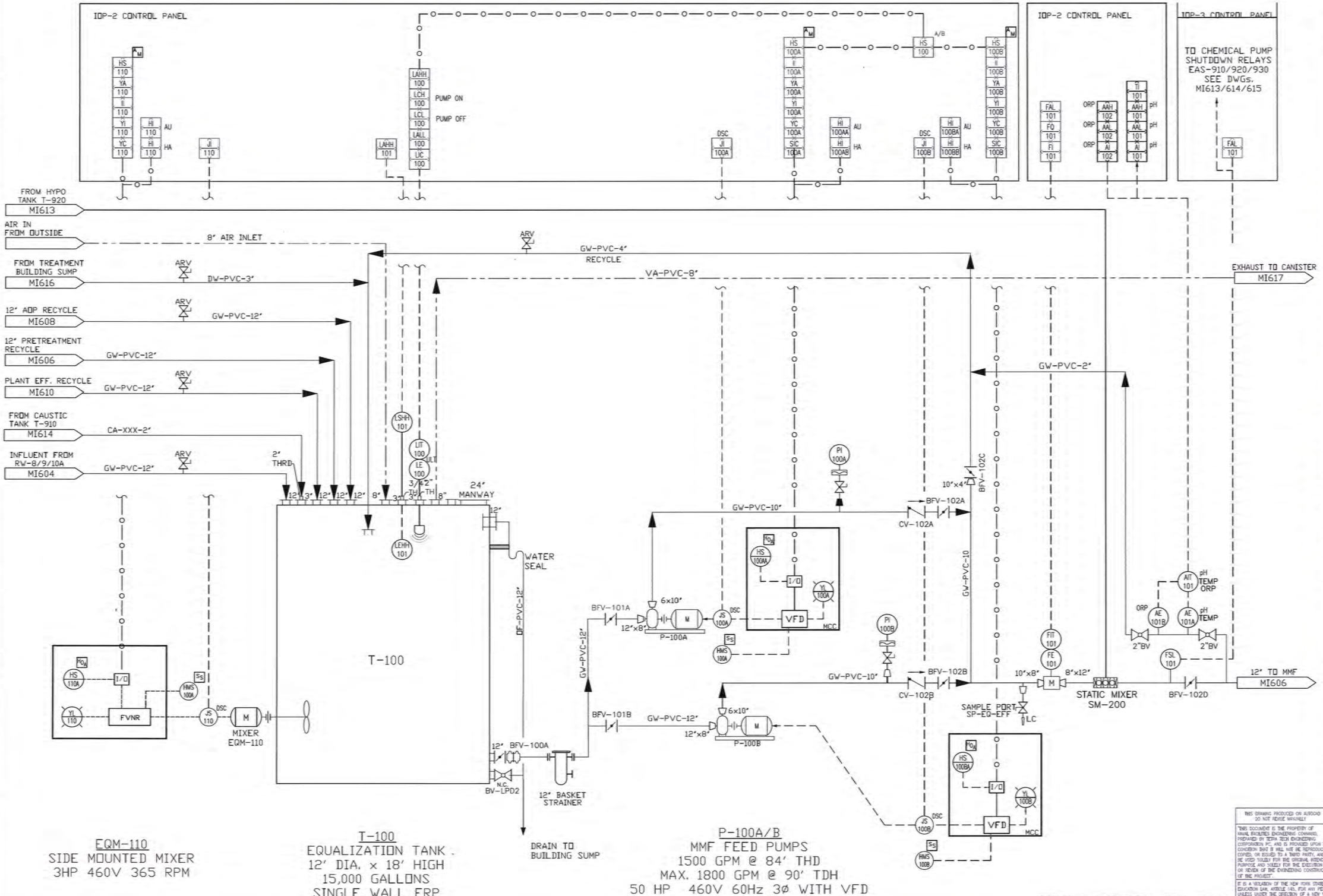
IOP-2 CONTROL PANEL
HS 110
YA 110
II 110
YI 110
YC 110
HI 110 AU
HI 110 HA
JI 110
LAHH 101
LAHH 100
LCH 100
PUMP ON
LCL 100
PUMP OFF
LALL 100
LIC 100
DSC
JI 100A
HS 100A
II 100A
YA 100A
YI 100A
YC 100A
SIC 100A
HI 100AA AU
HI 100AB HA
HS 100 A/B
HS 100B
II 100B
YA 100B
YI 100B
YC 100B
SIC 100B
HI 100BA AU
HI 100BB HA
JI 100B
IOP-2 CONTROL PANEL
FAL 101
FQ 101
FI 101
ORP
AAH 102
AAL 102
AI 102
TI 101
AAH 101
AAL 101
AI 101
pH
IOP-3 CONTROL PANEL
TO CHEMICAL PUMP SHUTDOWN RELAYS EAS-910/920/930 SEE DWGs. MI613/614/615
FAL 101
FROM HYPO TANK T-920
MI613
AIR IN FROM OUTSIDE
8" AIR INLET
ARV
GW-PVC-4"
RECYCLE
FROM TREATMENT BUILDING SUMP
MI616
DW-PVC-3"
VA-PVC-8"
EXHAUST TO CANISTER
MI617
12" AOP RECYCLE
MI608
GW-PVC-12"
12" PRETREATMENT RECYCLE
MI606
GW-PVC-12"
PLANT EFF. RECYCLE
MI610
GW-PVC-12"
GW-PVC-2"
FROM CAUSTIC TANK T-910
MI614
CA-XXX-2"
INFLUENT FROM RW-8/9/10A
MI604
GW-PVC-12"
2" THRD
LSHH 101
LIT 100
LE 100
ULT
3/4" TH
24" MANWAY
LEHH 101
WATER SEAL
DF-PVC-12"
T-100
GW-PVC-10"
PI 100A
BFV-102A
CV-102A
10"x4"
BFV-102C
GW-PVC-10
BFV-101A
6x10"
12"x8"
P-100A
JS 100A
HS 100A
I/D
YL 100A
VFD
MCC
HMS 100A
GW-PVC-12"
PI 100B
GW-PVC-10"
BFV-102B
CV-102B
FIT 101
FE 101
10"x8"
8"x12"
STATIC MIXER SM-200
12" TO MMF
MI606
AIT 101
pH TEMP ORP
AE 101B
AE 101A
pH TEMP
2"BV
FSL 101
BFV-102D
HS 110A
FVNR
HMS 100A
JS 110
MIXER EQM-110
BFV-101B
GW-PVC-12"
P-100B
SAMPLE PORT SP-EQ-EFF
LC
12" BFV-100A
N.C. BV-LPD2
12" BASKET STRAINER
DRAIN TO BUILDING SUMP
HS 100B
JS 100B
HMS 100B
EQM-110
SIDE MOUNTED MIXER
3HP 460V 365 RPM
T-100
EQUALIZATION TANK .
12' DIA. x 18' HIGH
15,000 GALLONS
SINGLE WALL FRP
P-100A/B
MMF FEED PUMPS
1500 GPM @ 84' THD
MAX. 1800 GPM @ 90' TDH
50 HP 460V 60Hz 3Ø WITH VFD
ISSUED FOR BID FEB., 2026
NAVFAC
TETRA TECH
As per document from Nicole Oxford NAVFAC. MIDLANT PLL/EV3
03/24/2026
NAVAL FACILITIES ENGINEERING SYSTEMS COMMAND - MID - ATLANTIC
NAVAL INDUSTRIAL RESERVE ORDNANCE PLANT
NAVAL WEAPONS INDUSTRIAL RESERVE PLANT BETHPAGE, NEW YORK
PHASE III - TREATMENT PLANT
EQUALIZATION TANK & PUMPING SYSTEM
SCALE: AS NOTED
112G08005
MI605

MMF CONTROL PANEL (SUPPLIED BY VENDOR)

ZIO 210 / ZIC 210 / ZYO 210 / ZYC 210 / KYC 210 — PAH 210 / PAL 210 / PI 210
ZIO 210C / ZIC 210C / ZYO 210C / ZYC 210C / KYC 210C — KA 210 MMF-210 TIME
ZIO 210A / ZIC 210A / ZYO 210A / ZYC 210A / KYC 210A — PDAH 210
ZIO 210B / ZIC 210B / ZYO 210B / ZYC 210B / KYC 210B
ZIO 220 / ZIC 220 / ZYO 220 / ZYC 220 / KYC 220
ZIO 220C / ZIC 220C / ZYO 220C / ZYC 220C / KYC 220C — KA 220 MMF-220 TIME
ZIO 220A / ZIC 220A / ZYO 220A / ZYC 220A / KYC 220A — PDAH 220
ZIO 220B / ZIC 220B / ZYO 220B / ZYC 220B / KYC 220B
ZIO 230B / ZIC 230B / ZYO 230B / ZYC 230B / KYC 230B
ZIO 230C / ZIC 230C / ZYO 230C / ZYC 230C / KYC 230C
ZIO 230 / ZIC 230 / ZYO 230 / ZYC 230 / KYC 230 — KA 230 MMF-230 TIME
ZIO 230A / ZIC 230A / ZYO 230A / ZYC 230A / KYC 230A — PDAH 230
PAH 230 / PAL 230 / PI 230

ETHERNET IP LNK TO GWT CONTROL SYSTEM

IOP-4 CONTROL PANEL — PDAH 240 / PDI 240

SKID LIMITS

DW-PVC-8"

PI 231

BW-PVC-8"

BASKET STRAINER

TO BWW TANK T-550 — MI612

FROM EQ TANK PUMPS P-100A/B — MI605

BV-HPV6

PIT 210

MOV-210C

MOV-220C

MOV-230C

GW-PVC-12"

GW-PVC-10"

MOV-210A

BFV-210A

BFV-220A

MOV-220A

BFV-230A

MOV-230A

AIR/VAC 2" NPT

1" VENT

MMF-210

MMF-220

MMF-230

PDI 210 / PDSH 210

PDI 220 / PDSH 220

PDI 230 / PDSH 230

DRAIN 3"

1"

MOV-210B

BFV-210B

MOV-220B

BFV-220B

BFV-220C

MOV-230B

BFV-230B

PIT 230

LC

SAMPLE PORT SP-MMF-EFF

MOV-210

MOV-220

MOV-230

BWS-PVC-8"

MMF SKID SYSTEM SUPPLIED BY THE VENDOR

1" AIR LINE

BW-PVC-12"

¾" DRAIN

BV-HPV7

FROM BWS PUMP P-500A/B — MI611

H PDIT 240 L

PI 240A / PI 240B

BFV-240B-1 / BFV-240B-2

CF-240

3W-240

PI 250A / PI 250B

BFV-250C-1 / BFV-250C-2

CF-250

BFV-250D-2

BFV-250D-1

GW-PVC-12"

TO AOP — MI608

12" PRETREATMENT RECYCLE TO EQ. TANK — MI605

STATIC MIXER
SM-200
3 ELEMENT INLINE STATIC
MIXER HYDROGEN PEROXIDE

MMF – 210/220/230
MULTIMEDIA PRESSURE FILTERS
10' DIA.x 11.5' H
(SIDE WALL HEIGHT 6'-0")

CF-240/250
CARTRIDGE FILTERS
36"Ø x 122"L
60" LONG 13 ELEMENTS

ISSUED FOR BID FEB., 2026

THIS DRAWING PRODUCED ON AUTOCAD
DO NOT REVISE MANUALLY

"THIS DOCUMENT IS THE PROPERTY OF NAVAL FACILITIES ENGINEERING COMMAND, PREPARED BY TETRA TECH ENGINEERING CORPORATION PC, AND IS PROVIDED UPON THE CONDITION THAT IT WILL NOT BE REPRODUCED, COPIED, OR ISSUED TO A THIRD PARTY, AND WILL BE USED SOLELY FOR THE ORIGINAL INTENDED PURPOSE AND SOLELY FOR THE EVALUATION OR REVIEW OF THE ENGINEERING CONSTRUCTION OF THE PROJECT."

IT IS A VIOLATION OF THE NEW YORK STATE EDUCATION LAW, ARTICLE 145, FOR ANY PERSON, UNLESS UNDER THE DIRECTION OF A NEW YORK STATE LICENSED PROFESSIONAL ENGINEER, TO ALTER AN ITEM ON THIS DOCUMENT IN ANY WAY.

NAVFAC

STATE OF NEW YORK — JOHN DANIEL BRANCH — 080336 — LICENSED PROFESSIONAL ENGINEER

TETRA TECH
www.tetratech.com
4433 CORPORATION LANE, SUITE 300
VIRGINIA BEACH, VA 23462
PHONE: (757) 461-3358 FAX: (757) 461-4148
A/E INFO

APPROVED:
FOR COMMANDER NAVFAC

ACTIVITY
As per document from Nicole Coward
NAVFAC. MIDLANT PLL/EV3

SUBMITTED TO — DATE 03/24/2026
DES — DRW — CHK —
PM/CM
BRANCH MANAGER
CHIEF ENG/ARCH
FIRE PROTECTION

NAVAL FACILITIES ENGINEERING SYSTEMS COMMAND - MID - ATLANTIC
NAVAL INDUSTRIAL RESERVE ORDNANCE PLANT
NAVAL WEAPONS INDUSTRIAL RESERVE PLANT BETHPAGE, NEW YORK
PHASE III - TREATMENT PLANT
MULTIMEDIA PRESSURE SYSTEM & CARTRIDGE FILTERS

SCALE: AS NOTED
EPROJECT NO.:
CONSTR. CONTR. NO. 112G08005
NAVFAC DRAWING NO. ##
SHEET OF

MI606

CAUTION: IF SHEET IS LESS THAN 24"x36" USE GRAPHIC SCALE

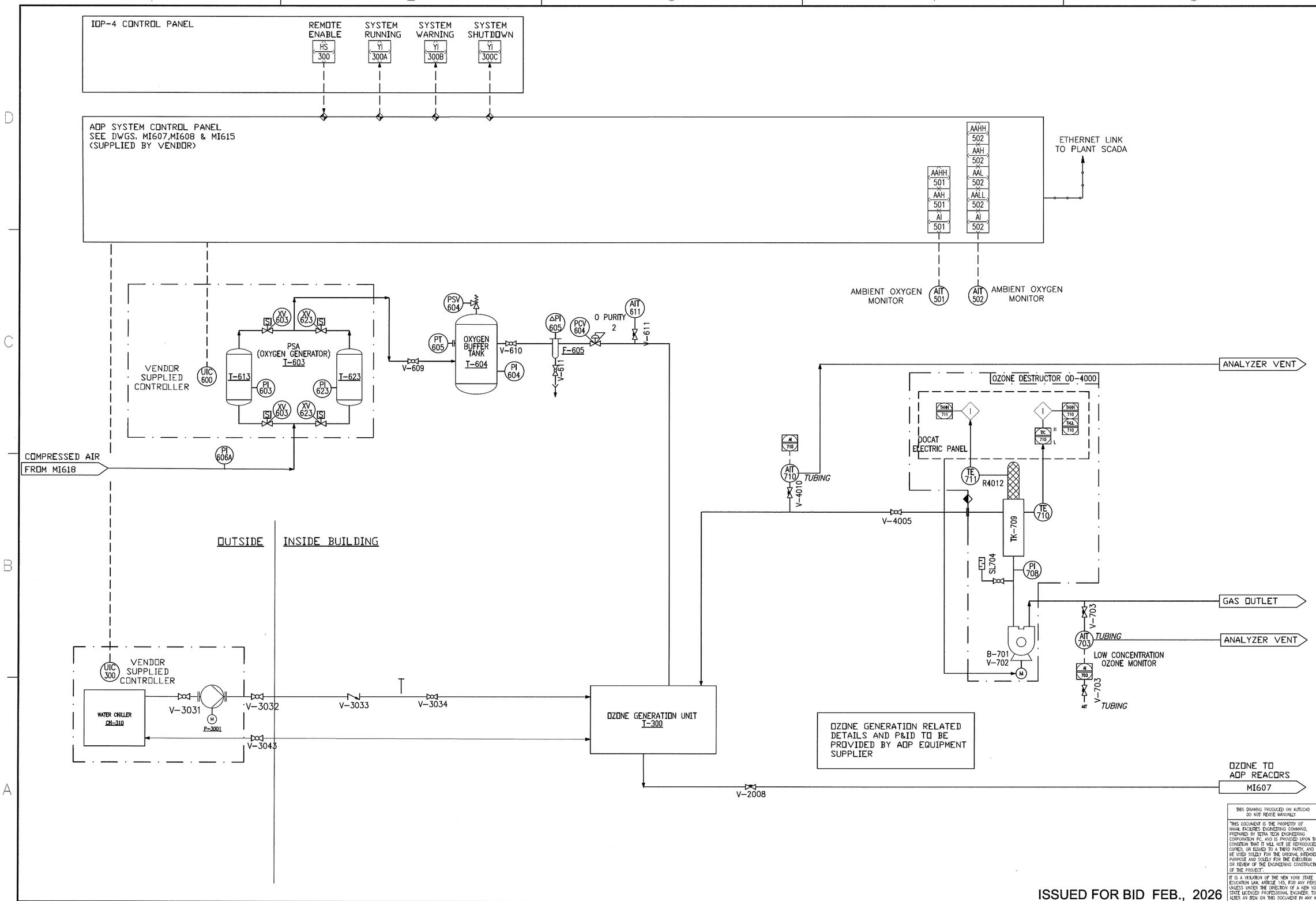

ISSUED FOR BID FEB., 2026

THIS DRAWING PRODUCED ON AUTOCAD DO NOT REVISE MANUALLY

"THIS DOCUMENT IS THE PROPERTY OF NAVAL FACILITIES ENGINEERING COMMAND, PREPARED BY TETRA TECH ENGINEERING CORPORATION PC, AND IS PROVIDED UPON THE CONDITION THAT IT WILL NOT BE REPRODUCED, COPIED, OR ISSUED TO A THIRD PARTY, AND WILL BE USED SOLELY FOR THE ORIGINAL INTENDED PURPOSE AND SOLELY FOR THE EXECUTION OR REVIEW OF THE ENGINEERING CONSTRUCTION OF THE PROJECT".

IT IS A VIOLATION OF THE NEW YORK STATE EDUCATION LAW, ARTICLE 145, FOR ANY PERSON, UNLESS UNDER THE DIRECTION OF A NEW YORK STATE LICENSED PROFESSIONAL ENGINEER, TO ALTER AN ITEM ON THIS DOCUMENT IN ANY WAY.

NAVFAC

STATE OF NEW YORK — DAVID DANIEL BRAGACZ — 080336 — LICENSED PROFESSIONAL ENGINEER

TETRA TECH
www.tetratech.com
4433 CORPORATION LANE, SUITE 300
VIRGINIA BEACH, VA 23462
PHONE: (757) 461-2708 FAX: (757) 461-1418
A/E NPO

APPROVED
FOR COMMANDER NAVFAC 4/30/2026

ACTIVITY
As per document from Nicole Coward
NAVFAC. MIDLANT PLL/EV3

SATISFACTORY TO DATE 03/24/2026
DES -- DRW -- CHK --
PM/DM ..
BRANCH MANAGER --
CHIEF ENG/ARCH ..
FIRE PROTECTION ..

NAVAL FACILITIES ENGINEERING SYSTEMS COMMAND - MID - ATLANTIC
GN08 NAVAL INDUSTRIAL RESERVE ORDNANCE PLANT
NAVAL WEAPONS INDUSTRIAL RESERVE PLANT BETHPAGE, NEW YORK
PHASE III - TREATMENT PLANT
AIR COMPRESSORS OXGYEN & OZONE SYSTEMS

SCALE: AS NOTED
EPROJECT NO.: .
CONSTR. CONTR. NO. 112G08005
NAVFAC DRAWING NO. ##
SHEET OF .
MI607

CAUTION:IF SHEET IS LESS THAN 34"x22" USE GRAPHIC SCALE

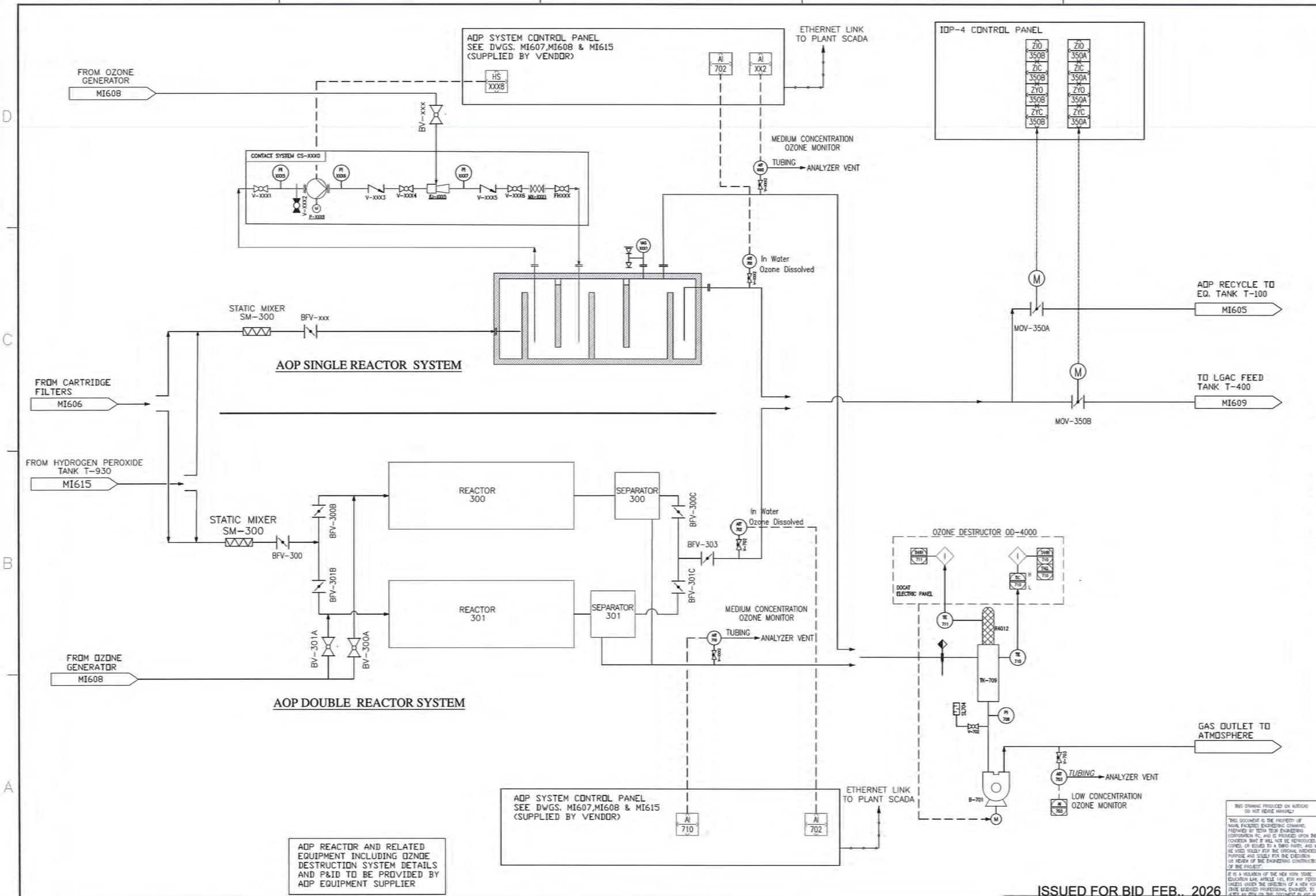
AOP SYSTEM CONTROL PANEL
SEE DWGS. MI607,MI608 & MI615
(SUPPLIED BY VENDOR)
ETHERNET LINK TO PLANT SCADA
IOP-4 CONTROL PANEL
FROM OZONE GENERATOR
MI608
BV-xxx
CONTACT SYSTEM CS-XXXD
MEDIUM CONCENTRATION OZONE MONITOR
TUBING
ANALYZER VENT
In Water Ozone Dissolved
STATIC MIXER SM-300
BFV-xxx
AOP SINGLE REACTOR SYSTEM
AOP RECYCLE TO EQ. TANK T-100
MI605
MOV-350A
FROM CARTRIDGE FILTERS
MI606
TO LGAC FEED TANK T-400
MI609
MOV-350B
FROM HYDROGEN PEROXIDE TANK T-930
MI615
REACTOR 300
SEPARATOR 300
BFV-300C
BFV-300B
BFV-300
BFV-301B
BFV-303
BFV-301C
REACTOR 301
SEPARATOR 301
BV-301A
BV-300A
OZONE DESTRUCTOR OD-4000
DOCAT ELECTRIC PANEL
TK-709
GAS OUTLET TO ATMOSPHERE
LOW CONCENTRATION OZONE MONITOR
AOP DOUBLE REACTOR SYSTEM
AOP REACTOR AND RELATED EQUIPMENT INCLUDING OZNOE DESTRUCTION SYSTEM DETAILS AND P&ID TO BE PROVIDED BY AOP EQUIPMENT SUPPLIER
ISSUED FOR BID FEB., 2026
NAVFAC
TETRA TECH
As per document from Nicole Coward NAVFAC, MIDLANT PLL/EV3
03/24/2026
NAVAL FACILITIES ENGINEERING SYSTEMS COMMAND - MID - ATLANTIC
NAVAL INDUSTRIAL RESERVE ORDNANCE PLANT
NAVAL WEAPONS INDUSTRIAL RESERVE PLANT BETHPAGE, NEW YORK
PHASE III - TREATMENT PLANT
AOP REACTORS & OZONE DESTRUCTOR
AS NOTED
112G08005
MI608

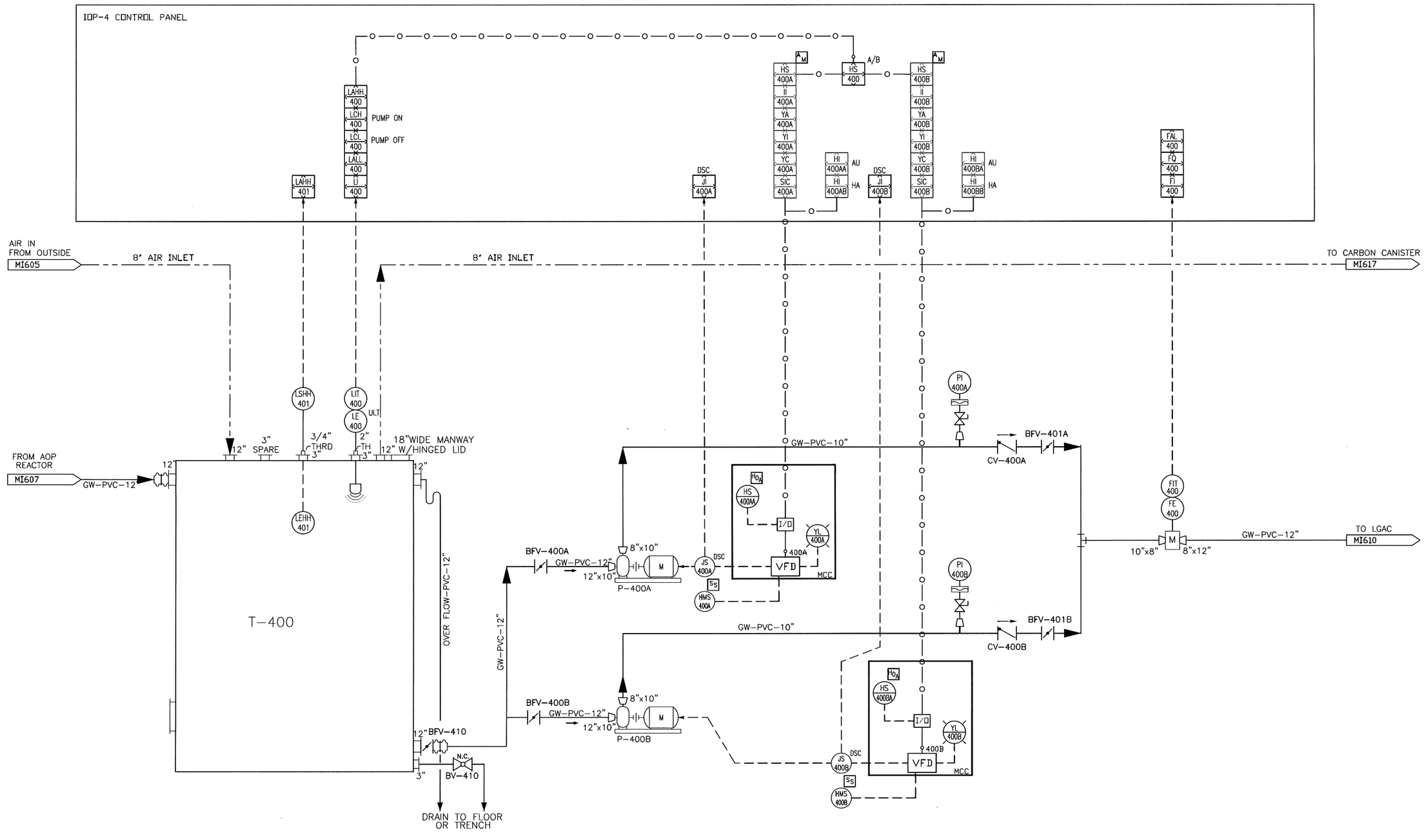

T-400
LGAC FEED TANK
12' DIA. x 18' HIGH
15,000 GALLONS
SINGLE WALL
XLPE

P-400 A/B
LGAC FEED PUMPS
1500 GPM @ 44' TDH
MAX. 1800 GPM @ 46' TDH
30 H.P. 460V 3Ø WITH VFD

ISSUED FOR BID FEB., 2026

THIS DRAWING PRODUCED ON AUTOCAD DO NOT REVISE MANUALLY

THIS DOCUMENT IS THE PROPERTY OF NAVAL FACILITIES ENGINEERING COMMAND, PREPARED BY TETRA TECH ENGINEERING CORPORATION PC, AND IS PROVIDED UPON THE CONDITION THAT IT WILL NOT BE REPRODUCED, COPIED, OR ISSUED TO A THIRD PARTY, AND WILL BE USED SOLELY FOR THE ORIGINAL INTENDED PURPOSE AND SOLELY FOR THE EXECUTION OR REVIEW OF THE ENGINEERING CONSTRUCTION OF THE PROJECT.

IT IS A VIOLATION OF THE NEW YORK STATE EDUCATION LAW, ARTICLE 145, FOR ANY PERSON, UNLESS UNDER THE DIRECTION OF A NEW YORK STATE LICENSED PROFESSIONAL ENGINEER, TO ALTER AN ITEM ON THIS DOCUMENT IN ANY WAY.

CAUTION: IF SHEET IS LESS THAN 34"x22" USE GRAPHIC SCALE

NAVFAC

STATE OF NEW YORK
DAVID DANIEL BRAVACK
080336
LICENSED PROFESSIONAL ENGINEER
SEAL

TETRA TECH
www.tetratech.com
4433 CORPORATION LANE, SUITE 300
VIRGINIA BEACH, VA 23462
PHONE: (757) 461-3768 FAX: (757) 461-4148
A/E INFO

APPROVED
FOR COMMANDER NAVFAC
ACTIVITY
As per document from Nicole Coward NAVFAC, MIDLANT PL1/EV3
SATISFACTORY TO DATE 03/24/2026
DES -- DRW -- CHK --
PM/DM
BRANCH MANAGER
CHIEF ENG/ARCH
FIRE PROTECTION

NAVAL FACILITIES ENGINEERING SYSTEMS COMMAND - MID - ATLANTIC
NAVAL INDUSTRIAL RESERVE ORDNANCE PLANT
NAVAL WEAPONS INDUSTRIAL RESERVE PLANT BETHPAGE, NEW YORK
PHASE III - TREATMENT PLANT
LGAC FEED TANK & PUMPING SYSTEM

SCALE: AS NOTED
EPROJECT NO.:
CONSTR. CONTR. NO. 11EG08005
NAVFAC DRAWING NO. ##
SHEET of
MI609

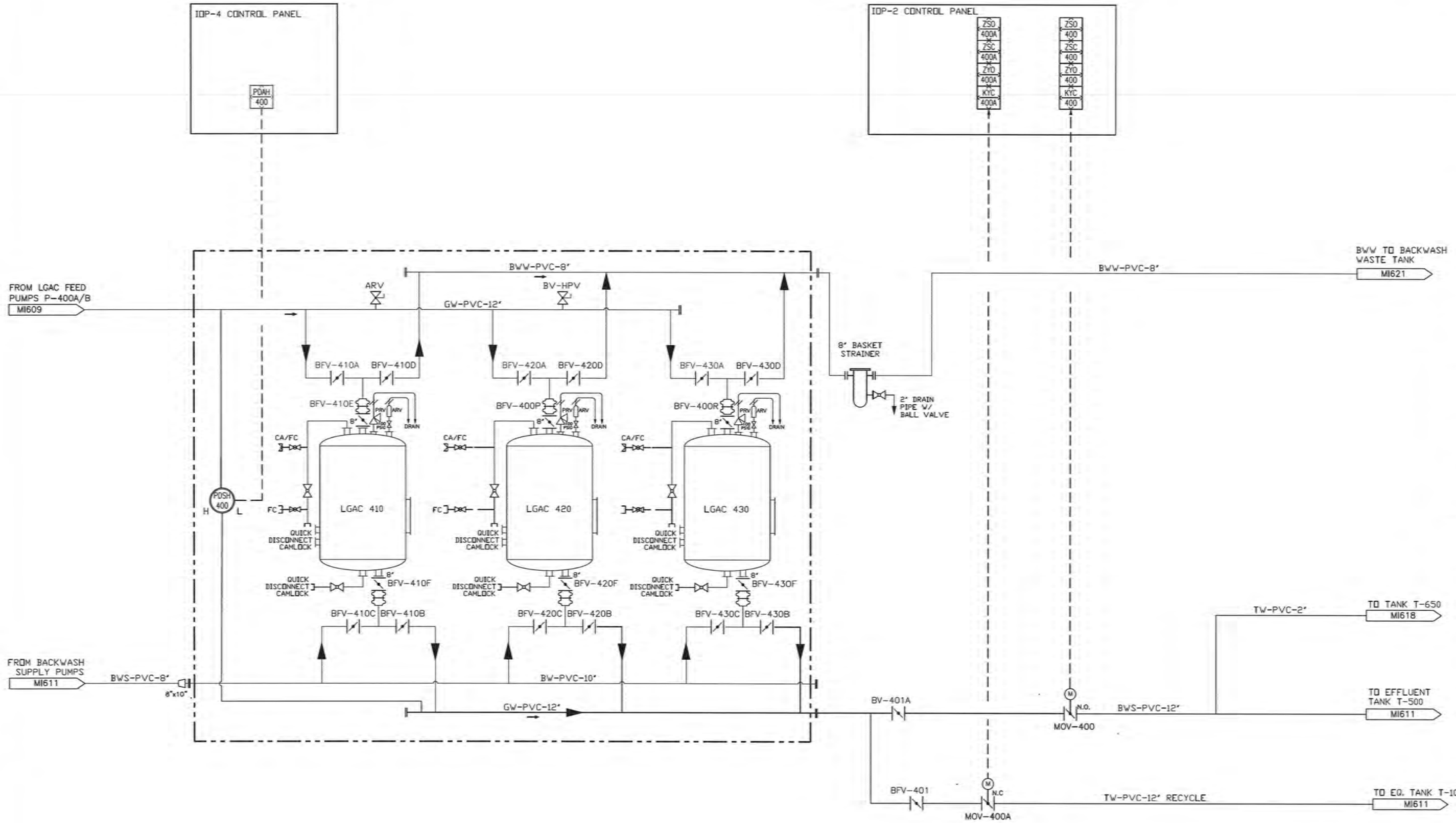

LGAC-410
LIQUID PHASE
GAC TANK
10'Ø x 18' HIGH
20,000 POUNDS

LGAC-420
LIQUID PHASE
GAC TANK
10'Ø x 18' HIGH
20,000 POUNDS

LGAC-430
LIQUID PHASE
GAC TANK
10'Ø x 18' HIGH
20,000 POUNDS

ISSUED FOR BID FEB., 2026

NAVFAC

STATE OF NEW YORK — DAVID DANIEL BRAGAW — 080336 — LICENSED PROFESSIONAL ENGINEER

TETRA TECH
4433 CORPORATION LANE, SUITE 300
VIRGINIA BEACH, VA 23462
PHONE: (757) 493-3398 FAX: (757) 493-4148

APPROVED
FOR COMMANDER NAVFAC

AGENCY
As per document from Nicole Coward NAVFAC. MIDLANT PLL/EV3

DESIGNATION IS DATE 03/24/2026
DES -- DRW -- CHK --
PM/CM
BRANCH MANAGER
CHIEF ENG/ARCH
FIRE PROTECTION

NAVAL FACILITIES ENGINEERING SYSTEMS COMMAND - MID - ATLANTIC
NAVAL INDUSTRIAL RESERVE ORDNANCE PLANT
NAVAL WEAPONS INDUSTRIAL RESERVE PLANT BETHPAGE, NEW YORK
PHASE III - TREATMENT PLANT
LGAC SYSTEM

SCALE: AS NOTED
EPROJECT NO.:
CONTR. CONTR. NO. 112G08005
NAVFAC DRAWING NO. ##
SHEET OF
MI610

THIS DRAWING PRODUCED ON AUTOCAD DO NOT REVISE MANUALLY

THIS DOCUMENT IS THE PROPERTY OF NAVAL FACILITIES ENGINEERING COMMAND, PREPARED BY TETRA TECH ENGINEERING CORPORATION PC, AND IS PROVIDED UPON THE CONDITION THAT IT WILL NOT BE REPRODUCED, COPIED, OR ISSUED TO A THIRD PARTY, AND WILL BE USED SOLELY FOR THE ORIGINAL INTENDED PURPOSE AND SOLELY FOR THE EXECUTION OR REVIEW OF THE ENGINEERING CONSTRUCTION OF THE PROJECT.

IT IS A VIOLATION OF THE NEW YORK STATE EDUCATION LAW, ARTICLE 145, FOR ANY PERSON UNLESS UNDER THE DIRECTION OF A NEW YORK STATE LICENSED PROFESSIONAL ENGINEER, TO ALTER AN ITEM ON THIS DOCUMENT IN ANY WAY.

CAUTION: IF SHEET IS LESS THAN 34"x22" USE GRAPHIC SCALE

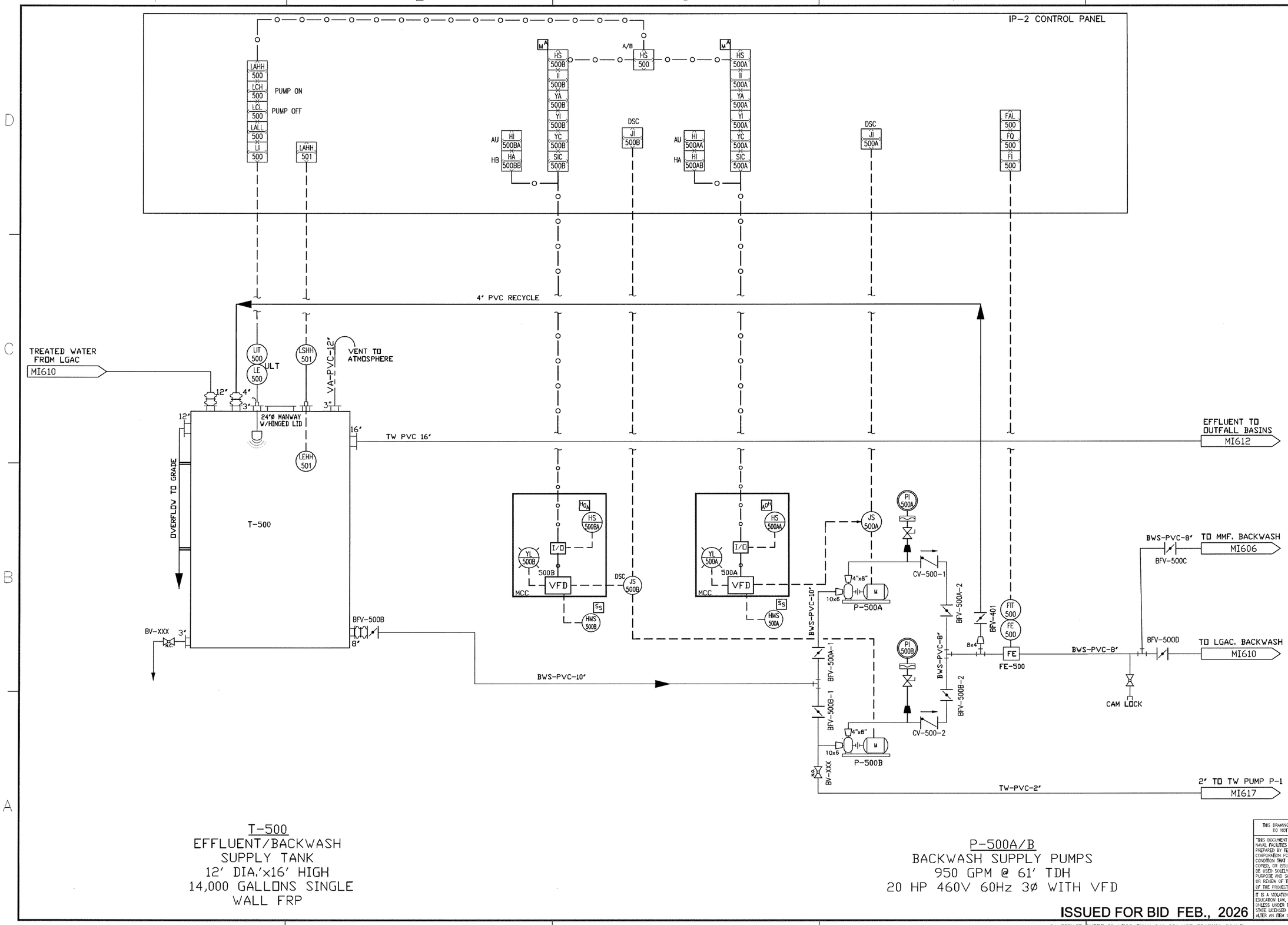

T-500
EFFLUENT/BACKWASH
SUPPLY TANK
12' DIA.'x16' HIGH
14,000 GALLONS SINGLE
WALL FRP

P-500A/B
BACKWASH SUPPLY PUMPS
950 GPM @ 61' TDH
20 HP 460V 60Hz 3Ø WITH VFD

ISSUED FOR BID FEB., 2026

THIS DRAWING PRODUCED ON AUTOCAD
DO NOT REVISE MANUALLY

"THIS DOCUMENT IS THE PROPERTY OF NAVAL FACILITIES ENGINEERING COMMAND, PREPARED BY TETRA TECH ENGINEERING CORPORATION PC, AND IS PROVIDED UPON THE CONDITION THAT IT WILL NOT BE REPRODUCED, COPIED, OR ISSUED TO A THIRD PARTY, AND WILL BE USED SOLELY FOR THE ORIGINAL INTENDED PURPOSE AND SOLELY FOR THE EXECUTION OR REVIEW OF THE ENGINEERING CONSTRUCTION OF THE PROJECT."

IT IS A VIOLATION OF THE NEW YORK STATE EDUCATION LAW, ARTICLE 145, FOR ANY PERSON, UNLESS UNDER THE DIRECTION OF A NEW YORK STATE LICENSED PROFESSIONAL ENGINEER, TO ALTER AN ITEM ON THIS DOCUMENT IN ANY WAY.

NAVFAC

STATE OF NEW YORK
RICHARD DANIEL BRADACK
080336
LICENSED PROFESSIONAL ENGINEER
SEAL

TETRA TECH
www.tetratech.com
4433 CORPORATION LANE, SUITE 300
VIRGINIA BEACH, VA 23462
PHONE: (757) 461-3768 FAX: (757) 451-4148
A/E INFO

APPROVED
FOR COMMANDER NAVFAC

ACTIVITY
As per document from Nicole Coward
NAVFAC, MIDLANT PLL/EV3

SATISFACTORY TO	DATE 03/24/2026	
DES	DRW	CHK

PM/DM
BRANCH MANAGER
CHIEF ENG/ARCH
FIRE PROTECTION

NAVAL FACILITIES ENGINEERING SYSTEMS COMMAND - MID - ATLANTIC
NAVAL INDUSTRIAL RESERVE ORDNANCE PLANT
CAGE
NAVAL WEAPONS INDUSTRIAL RESERVE PLANT BETHPAGE, NEW YORK
PHASE III - TREATMENT PLANT
BACKWASH SUPPLY TANK & PUMPING SYSTEM

SCALE: AS NOTED
EPROJECT NO.: -
CONSTR. CONTR. NO. 112G0B005
NAVFAC DRAWING NO. ##
SHEET OF
MI611

CAUTION: IF SHEET IS LESS THAN 34"x22" USE GRAPHIC SCALE

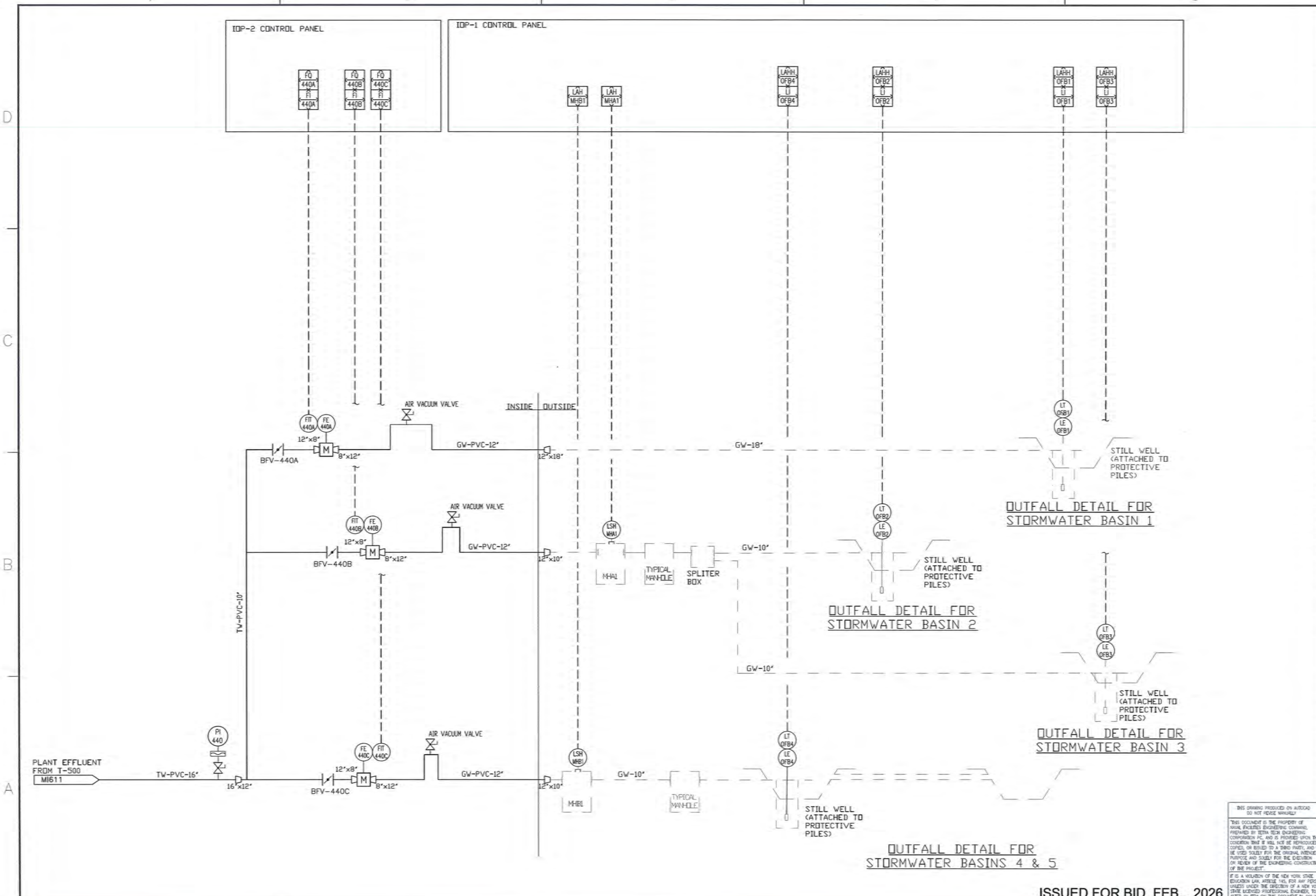

ISSUED FOR BID FEB., 2026

NAVFAC

STATE OF NEW YORK — DANIEL BRACKEN — 080336 — LICENSED PROFESSIONAL ENGINEER

TETRA TECH

4420 CORPORATION LANE, SUITE 300
VIRGINIA BEACH, VA 23462
PHONE: (757) 461-2268 FAX: (757) 461-4148
A/E INFO

APPROVED
FOR COMMANDER NAVFAC 4/30/2026

ACTIVITY
As per document from Nicole Coward NAVFAC, MIDLANT PLL/EV3

SUBMITTED TO DATE 03/24/2026

DES -- DRW -- CHK --

PM/CM
BRANCH MANAGER
CHIEF ENG/ARCH
FIRE PROTECTION

NAVAL FACILITIES ENGINEERING SYSTEMS COMMAND - MID - ATLANTIC
NAVAL INDUSTRIAL RESERVE ORDNANCE PLANT
NAVAL WEAPONS INDUSTRIAL RESERVE PLANT BETHPAGE, NEW YORK
PHASE III - TREATMENT PLANT
OUTFALL BASINS

SCALE: AS NOTED
EPROJECT NO.: -
CONSTR. CONTR. NO. 112G08005
NAVFAC DRAWING NO. ##
SHEET OF -

MI612

THIS DRAWING PRODUCED ON AUTOCAD DO NOT REVISE MANUALLY

"THIS DOCUMENT IS THE PROPERTY OF NAVAL FACILITIES ENGINEERING COMMAND, PREPARED BY TETRA TECH ENGINEERING CORPORATION PC, AND IS PROVIDED UPON THE CONDITION THAT IT WILL NOT BE REPRODUCED, COPIED, OR ISSUED TO A THIRD PARTY, AND WILL BE USED SOLELY FOR THE ORIGINAL INTENDED PURPOSE AND SOLELY FOR THE EXECUTION OR REVIEW OF THE ENGINEERING CONSTRUCTION OF THE PROJECT.

IT IS A VIOLATION OF THE NEW YORK STATE EDUCATION LAW, ARTICLE 145, FOR ANY PERSON, UNLESS UNDER THE DIRECTION OF A NEW YORK STATE LICENSED PROFESSIONAL ENGINEER, TO ALTER AN ITEM ON THIS DOCUMENT IN ANY WAY.

CAUTION: IF SHEET IS LESS THAN 34"x22" USE GRAPHIC SCALE

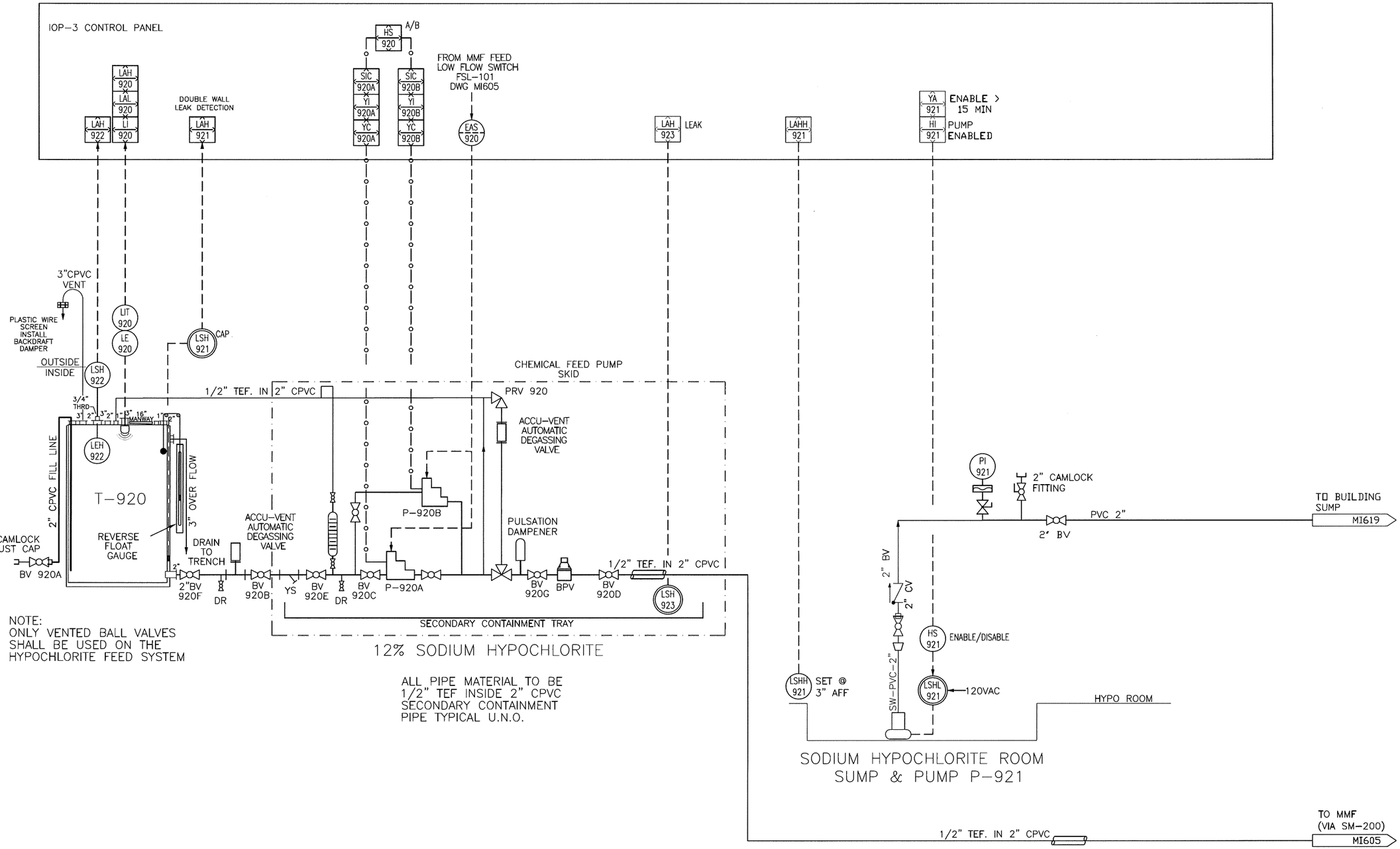

T-920
SODIUM HYPOCHLORITE
STORAGE TANK
6.5'ø x 5.5' HIGH
1000 GALLONS
DOUBLE WALL
HDLPE

P-920A/B
SODIUM HYPOCHLORITE
METERING PUMP & SYSTEM
0.6 TO 8 GPH

P-921
SODIUM HYPOCHLORITE
SUMP PUMP
30 GPM @ 15' TDH,
0.4 HP, 115V, 1ø

ISSUED FOR BID FEB., 2026

THIS DRAWING PRODUCED ON AUTOCAD
DO NOT REVISE MANUALLY

THIS DOCUMENT IS THE PROPERTY OF NAVAL FACILITIES ENGINEERING COMMAND, PREPARED BY TETRA TECH ENGINEERING CORPORATION PC, AND IS PROVIDED UPON THE CONDITION THAT IT WILL NOT BE REPRODUCED, COPIED, OR ISSUED TO A THIRD PARTY, AND WILL BE USED SOLELY FOR THE ORIGINAL INTENDED PURPOSE AND SOLELY FOR THE EVALUATION OR REVIEW OF THE ENGINEERING CONSTRUCTION OF THE PROJECT.

IT IS A VIOLATION OF THE NEW YORK STATE EDUCATION LAW, ARTICLE 145, FOR ANY PERSON, UNLESS UNDER THE DIRECTION OF A NEW YORK STATE LICENSED PROFESSIONAL ENGINEER, TO ALTER AN ITEM ON THIS DOCUMENT IN ANY WAY.

CAUTION:IF SHEET IS LESS THAN 34"x22" USE GRAPHIC SCALE

NAVFAC

STATE OF NEW YORK
DAVID DANIEL BRAVACK
080336
LICENSED PROFESSIONAL ENGINEER
SEAL

TETRA TECH
www.tetratech.com
4433 CORPORATION LANE, SUITE 300
VIRGINIA BEACH, VA 23462
PHONE: (757) 461-3768 FAX: (757) 461-4148
A/E INFO

APPROVED
FOR COMMANDER NAVFAC 4/30/2026
ACTIVITY
As per document from Nicole Coward
NAVFAC, MIDLANT PLL/EV3
SATISFACTORY TO DATE 03/24/2026
DES -- DRW -- CHK --
PM/DM --
BRANCH MANAGER --
CHIEF ENG/ARCH --
FIRE PROTECTION

NAVAL FACILITIES ENGINEERING SYSTEMS COMMAND - MID - ATLANTIC
NAVAL INDUSTRIAL RESERVE ORDNANCE PLANT
NAVAL WEAPONS INDUSTRIAL RESERVE PLANT BETHPAGE, NEW YORK
PHASE III - TREATMENT PLANT
SODIUM HYPOCHLORITE FEED SYSTEM

SCALE: AS NOTED
EPROJECT NO.: -
CONSTR. CONTR. NO. 112G08005
NAVFAC DRAWING NO. ##
SHEET OF -
MI613

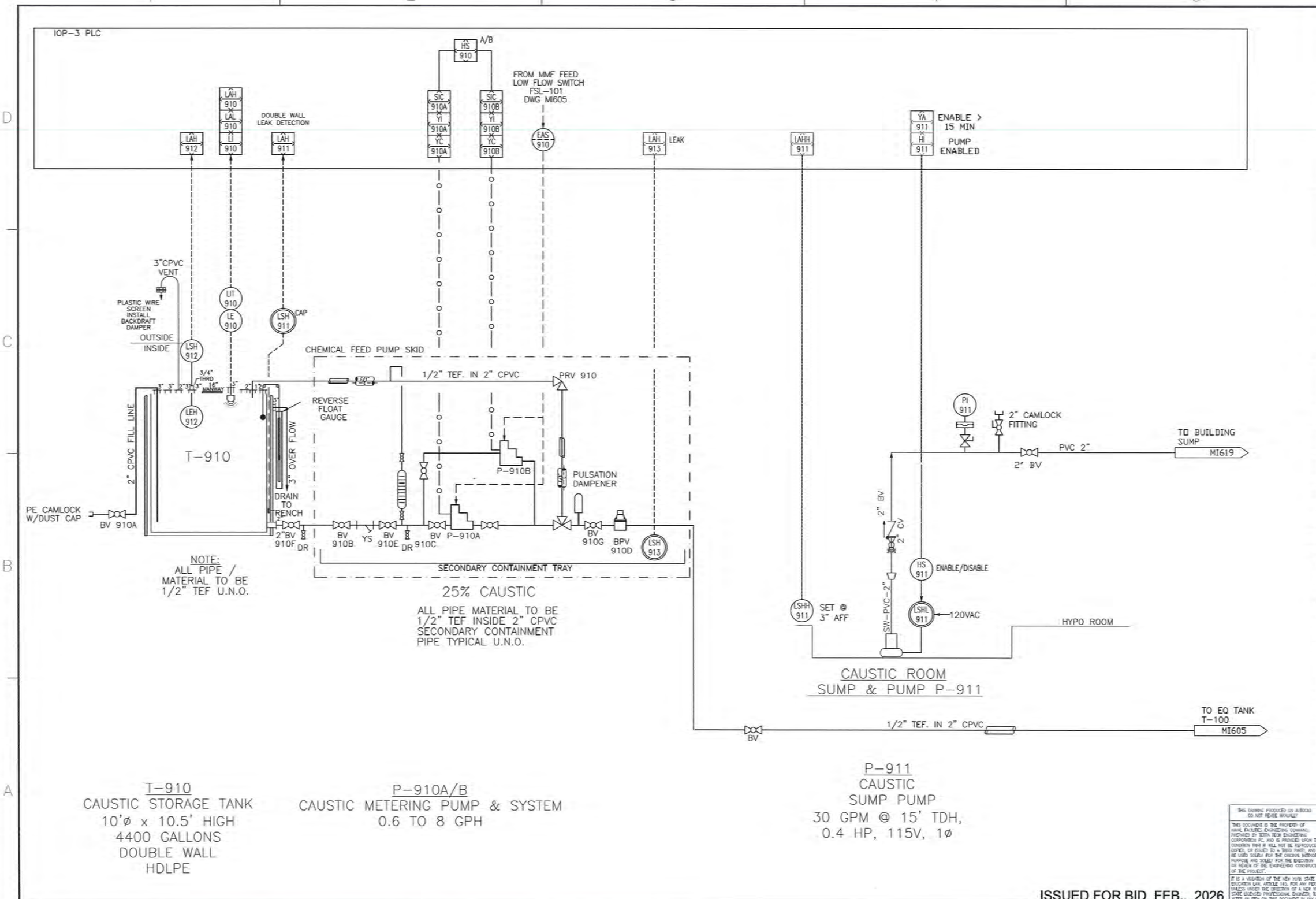

ISSUED FOR BID FEB., 2026

NAVFAC

STATE OF NEW YORK — DANIEL BARRACK — 080336 — LICENSED PROFESSIONAL ENGINEER

TETRA TECH
4433 CORPORATION LANE, SUITE 300
VIRGINIA BEACH, VA 23462
PHONE: (757) 461-3768 FAX: (757) 461-4148

APPROVED
FOR COMMANDER NAVFAC
ACTIVITY
As per document from Nicole Coward NAVFAC, MIDLANT PLL/EV3
SUBMITTED TO DATE 03/24/2026
DES.--- DFTR.-- CHK.---
PM/DM
BRANCH MANAGER
CHIEF ENG/ARCH
FIRE PROTECTION

NAVAL FACILITIES ENGINEERING SYSTEMS COMMAND - MID - ATLANTIC
NAVAL INDUSTRIAL RESERVE ORDNANCE PLANT
NAVAL WEAPONS INDUSTRIAL RESERVE PLANT BETHPAGE, NEW YORK
PHASE III - TREATMENT PLANT
CAUSTIC FEED SYSTEM

THIS DRAWING PRODUCED ON AUTOCAD DO NOT REVISE MANUALLY

THIS DOCUMENT IS THE PROPERTY OF NAVAL FACILITIES ENGINEERING COMMAND, PREPARED BY TETRA TECH ENGINEERING CORPORATION PC, AND IS PROVIDED UPON THE CONDITION THAT IT WILL NOT BE REPRODUCED, COPIED, OR ISSUED TO A THIRD PARTY, AND WILL BE USED SOLELY FOR THE ORIGINAL INTENDED PURPOSE AND SOLELY FOR THE EXECUTION OR REVIEW OF THE ENGINEERING CONSTRUCTION OF THE PROJECT.

IT IS A VIOLATION OF THE NEW YORK STATE EDUCATION LAW ARTICLE 145, FOR ANY PERSON, UNLESS UNDER THE DIRECTION OF A NEW YORK STATE LICENSED PROFESSIONAL ENGINEER, TO ALTER AN ITEM ON THIS DOCUMENT IN ANY WAY.

SCALE AS NOTED
EPROJECT NO.:
CONSTR. CONTR. NO. 112G08005
NAVFAC DRAWING NO. ##
SHEET OF
MI614

CAUTION: IF SHEET IS LESS THAN 24"x36" USE GRAPHIC SCALE

FILE NAME: C:\Projects\Phase -3\Drawings\Process\PID_.dwg LAYOUT NAME: PID-MI614 PLOTTED: Wednesday, April 22, 2026 - 3:56pm USER: KEVIN.KANE

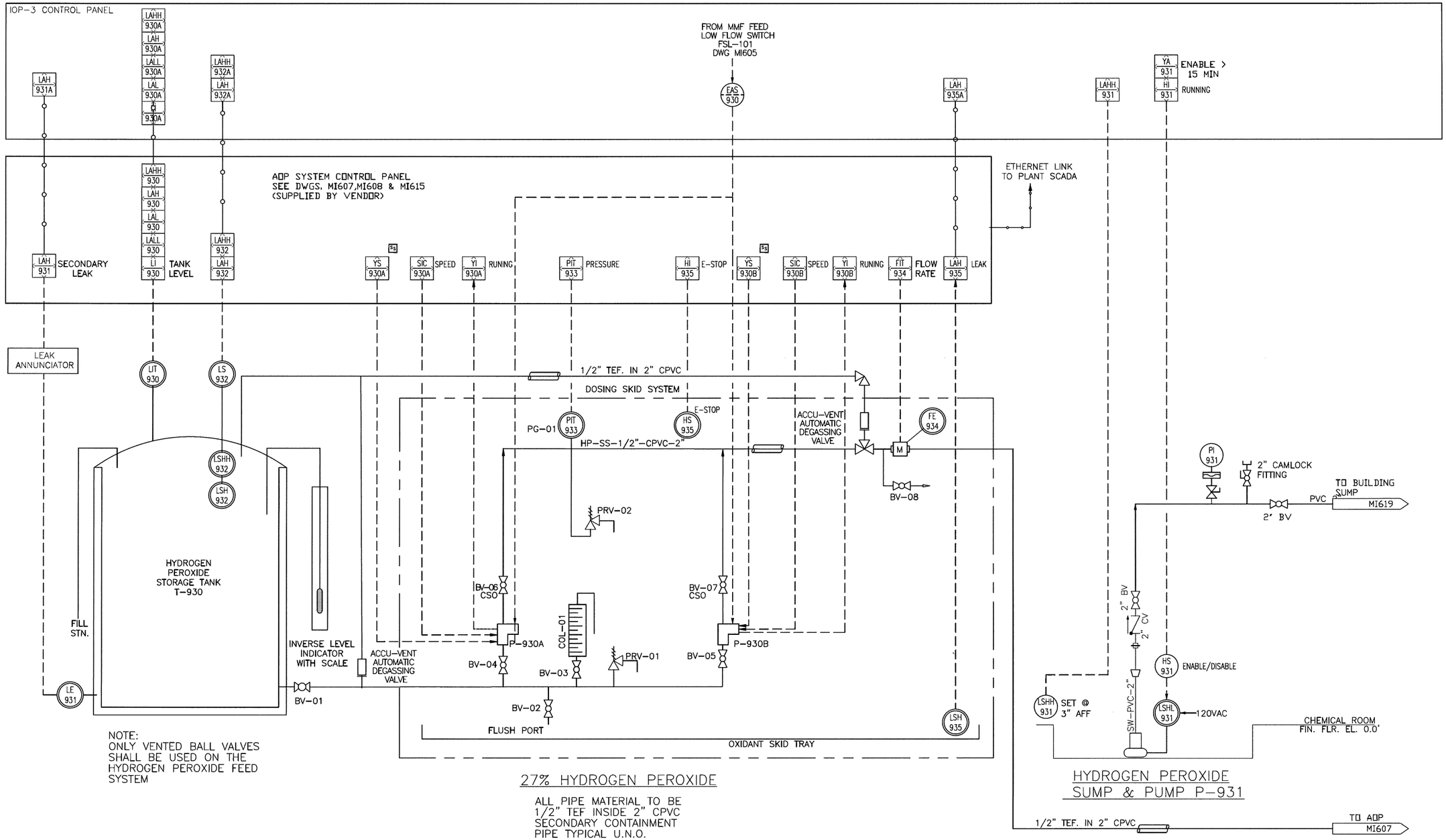

T-930
HYDROGEN PEROXIDE TANK
8.5'ø x 9' HIGH
3000 GALLONS
DOUBLE WALL
HDLPE

P-930A/B
HYDROGEN PEROXIDE
METERING PUMP &
SYSTEM 0.6 TO 4 GPH

P-931
HYDROGEN PEROXIDE SUMP PUMP
30 GPM @ 15' TDH,
0.4 HP, 115V, 1ø

ISSUED FOR BID FEB., 2026

THIS DRAWING PRODUCED ON AUTOCAD
DO NOT REVISE MANUALLY

THIS DOCUMENT IS THE PROPERTY OF NAVAL FACILITIES ENGINEERING COMMAND, PREPARED BY TETRA TECH ENGINEERING CORPORATION PC, AND IS PROVIDED UPON THE CONDITION THAT IT WILL NOT BE REPRODUCED, COPIED, OR ISSUED TO A THIRD PARTY, AND WILL BE USED SOLELY FOR THE ORIGINAL INTENDED PURPOSE AND SOLELY FOR THE EXECUTION OR REVIEW OF THE ENGINEERING CONSTRUCTION OF THE PROJECT.

IT IS A VIOLATION OF THE NEW YORK STATE EDUCATION LAW, ARTICLE 145, FOR ANY PERSON, UNLESS UNDER THE DIRECTION OF A NEW YORK STATE LICENSED PROFESSIONAL ENGINEER, TO ALTER AN ITEM ON THIS DOCUMENT IN ANY WAY.

NAVFAC

STATE OF NEW YORK
DANIEL BRATACK
080336
LICENSED PROFESSIONAL ENGINEER
SEAL

TETRA TECH
www.tetratech.com
4433 CORPORATION LANE, SUITE 300
VIRGINIA BEACH, VA 23462
PHONE: (757) 461-3768 FAX: (757) 461-4148
A/E INFO

APPROVED
FOR COMMANDER NAVFAC
ACTIVITY
As per document from Nicole Coward NAVFAC. MIDLANT PLL/EV3
SATISFACTORY TO DATE 03/24/2026
DES DRW CHK
PM/DM
BRANCH MANAGER
CHIEF ENG/ARCH
FIRE PROTECTION

NAVAL FACILITIES ENGINEERING SYSTEMS COMMAND - MID - ATLANTIC
GA38
NAVAL WEAPONS INDUSTRIAL RESERVE PLANT BETHPAGE, NEW YORK
NAVAL INDUSTRIAL RESERVE ORDNANCE PLANT
PHASE III - TREATMENT PLANT
HYDROGEN PEROXIDE FEED SYSTEM

SCALE: AS NOTED
EPROJECT NO.:
CONSTR. CONTR. NO. 112G08005
NAVFAC DRAWING NO ###
SHEET OF
MI615

CAUTION: IF SHEET IS LESS THAN 34"x22" USE GRAPHIC SCALE

:\Projects\Phase -3\Drawings\Process\PID_.dwg, 4/22/2026 3:56:56 PM, Adobe BW PDF.pc3

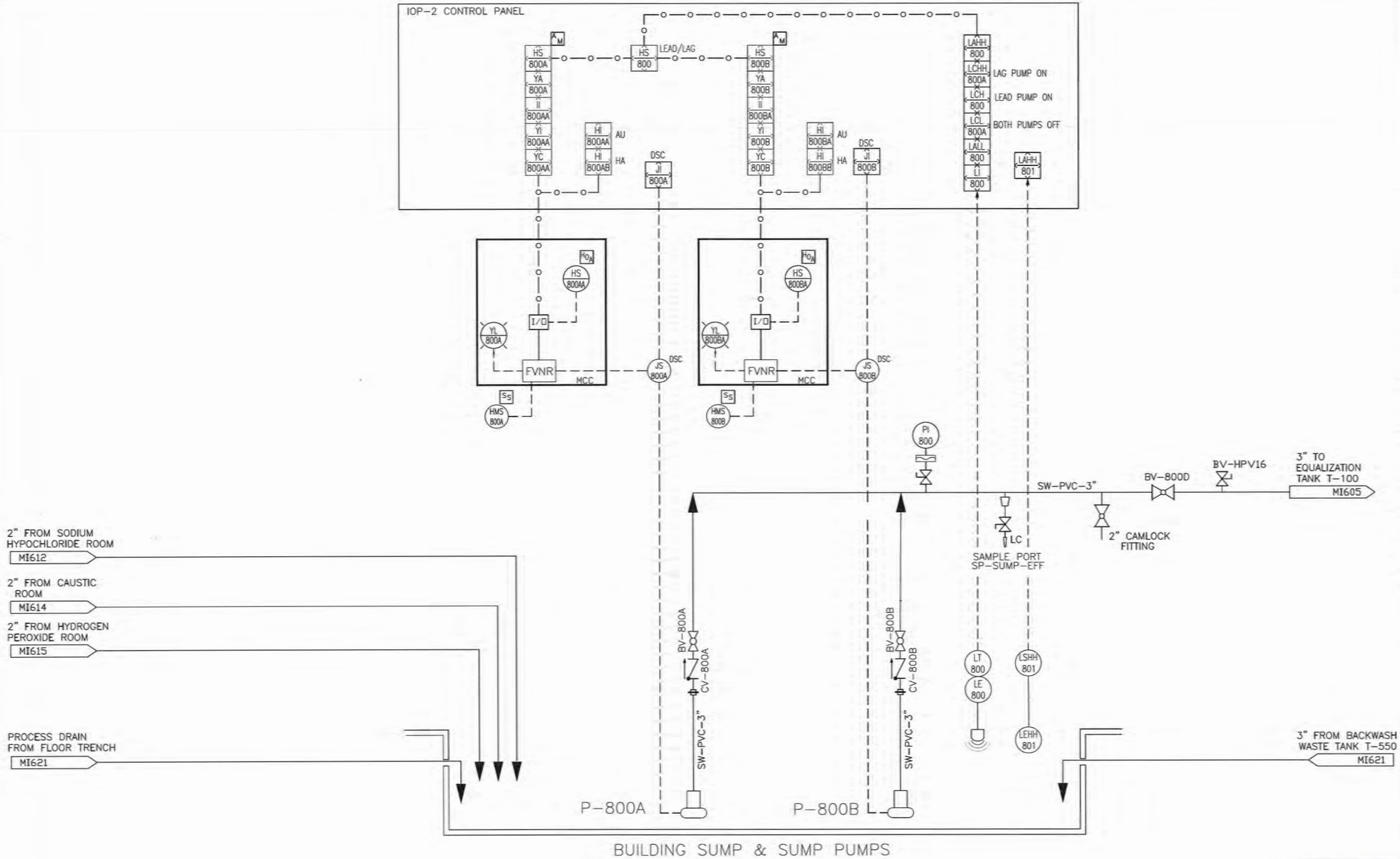

BUILDING SUMP & SUMP PUMPS

P-800A/B
TREATMENT BUILDING SUMP PUMP
(5,700 GALLON CAPACITY)
150 GPM @ 40 FT TDH 5 H.P.
460V 60Hz 3ø

ISSUED FOR BID FEB., 2026

NAVFAC

STATE OF NEW YORK
080336
LICENSED PROFESSIONAL ENGINEER

TETRA TECH
4433 CORPORATION LANE, SUITE 205
VIRGINIA BEACH, VA 23462
PHONE: (757) 481-3768 FAX: (757) 481-4148
A/E INFO

APPROVED
FOR COMMANDER NAVFAC
4/3/2026

ADMIN
As per document from Nicole Coward
NAVFAC, MIDLANT PLL/EV3
SUBMITTED TO DATE 03/24/2026

DES	DRW	CHK

PM/DM
BRANCH MANAGER
CHIEF ENG/ARCH
FIRE PROTECTION

NAVAL FACILITIES ENGINEERING SYSTEMS COMMAND - MID - ATLANTIC
NAVAL INDUSTRIAL RESERVE ORDNANCE PLANT
GUON
NAVAL WEAPONS INDUSTRIAL RESERVE PLANT BETHPAGE, NEW YORK
PHASE III - TREATMENT PLANT
TREATMENT BUILDING SUMP & PUMPING SYSTEM

SCALE: AS NOTED
EPROJECT NO.:
CONSTR. CONTR. NO.
112G08005
NAVFAC DRAWING NO. ##
SHEET OF
MI616

THIS DRAWING PRODUCED ON AUTOCAD
DO NOT REDRAW MANUALLY

THIS DOCUMENT IS THE PROPERTY OF NAVAL FACILITIES ENGINEERING COMMAND, PREPARED BY TETRA TECH ENGINEERING CORPORATION PC, AND IS PROVIDED UPON THE CONDITION THAT IT WILL NOT BE REPRODUCED, COPIED, OR ISSUED TO A THIRD PARTY, AND WILL BE USED SOLELY FOR THE ORIGINAL INTENDED PURPOSE AND SOLELY FOR THE EXECUTION OF WORK OF THE ENGINEERING CONSTRUCTION OF THE PROJECT.

IT IS A VIOLATION OF THE NEW YORK STATE EDUCATION LAW, ARTICLE 145, FOR ANY PERSON, UNLESS UNDER THE DIRECTION OF A NEW YORK STATE LICENSED PROFESSIONAL ENGINEER, TO ALTER AN ITEM ON THIS DOCUMENT IN ANY WAY.

CAUTION: IF SHEET IS LESS THAN 36"x48" USE GRAPHIC SCALE

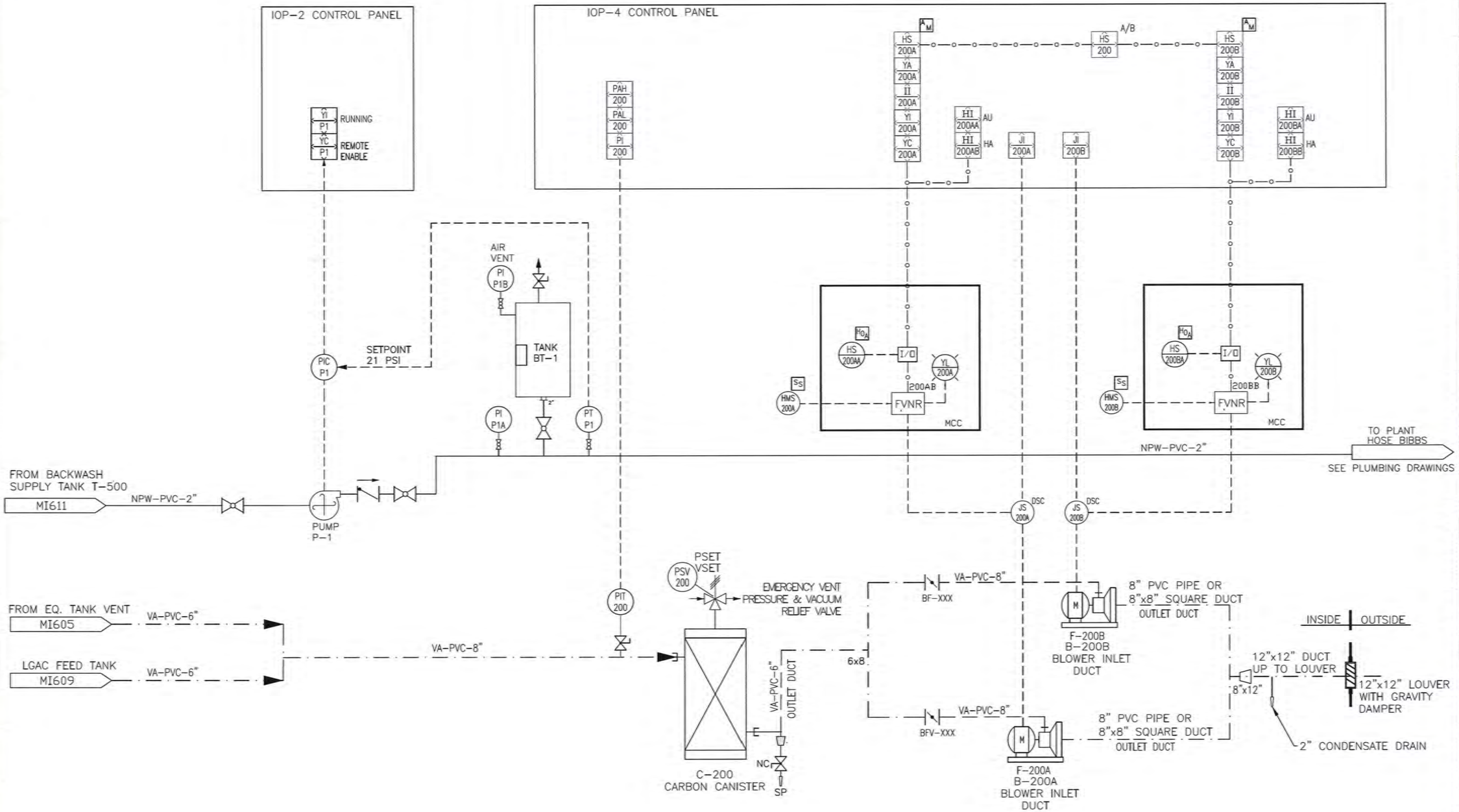

PUMP P1
NON-POTABLE WATER PUMP
10 GPM @ 50 TDH
1 HP 3ø 460 VAC

BLADDER TANK BT1/BT2
100 GAL @ 125 PSI

C-200
CARBON CANISTER
46"OD x 7.75'H
1200 CFM,
1000 LBS CARBON

B-200A/B
CARBON CANISTER BLOWERS
600 CFM, 3 HP, 460V, 3ø

ISSUED FOR BID FEB., 2026

NAVFAC

STATE OF NEW YORK
LICENSED PROFESSIONAL ENGINEER
080336

TETRA TECH
4403 CORPORATION LANE, SUITE 300
VIRGINIA BEACH, VA 23462
PHONE: (757) 493-2708 FAX: (757) 497-1148
A/E INFO

APPROVED
FOR CRAWFORD NAVFAC

ACTIVITY
As per document from Node Coward
NAVFAC. MIDLANT PLL/EV3
SATISFACTORY TO DATE 03/24/2026
DES — DRW — CHK —
PM/CM
BRANCH MANAGER
CHIEF ENG/ARCH
FIRE PROTECTION

NAVAL FACILITIES ENGINEERING SYSTEMS COMMAND - MID - ATLANTIC
NAVAL INDUSTRIAL RESERVE ORDNANCE PLANT
NAVAL WEAPONS INDUSTRIAL RESERVE PLANT BETHPAGE, NEW YORK
PHASE III - TREATMENT PLANT
TREATMENT BUILDING AIR BLOWER & CARBON CANISTER

CAGE

THIS DRAWING PRODUCED ON AUTOCAD
DO NOT REVISE MANUALLY

THIS DOCUMENT IS THE PROPERTY OF NAVAL FACILITIES ENGINEERING COMMAND, PREPARED BY TETRA TECH ENGINEERING CORPORATION PC, AND IS PROVIDED UPON THE CONDITION THAT IT WILL NOT BE REPRODUCED, COPIED, OR ISSUED TO A THIRD PARTY, AND WILL BE USED SOLELY FOR THE ORIGINAL INTENDED PURPOSE AND SOLELY FOR THE EXECUTION OR REVIEW OF THE ENGINEERING CONSTRUCTION OF THE PROJECT.

IT IS A VIOLATION OF THE NEW YORK STATE EDUCATION LAW, ARTICLE 145, FOR ANY PERSON, UNLESS UNDER THE DIRECTION OF A NEW YORK STATE LICENSED PROFESSIONAL ENGINEER, TO ALTER AN ITEM ON THIS DOCUMENT IN ANY WAY.

SCALE: AS NOTED
EPROJECT NO.: -
CONSTR. CONTR. NO. 112G08005
NAVFAC DRAWING NO. ##
SHEET OF -
MI617

CAUTION: IF SHEET IS LESS THAN 34"x22" USE GRAPHIC SCALE

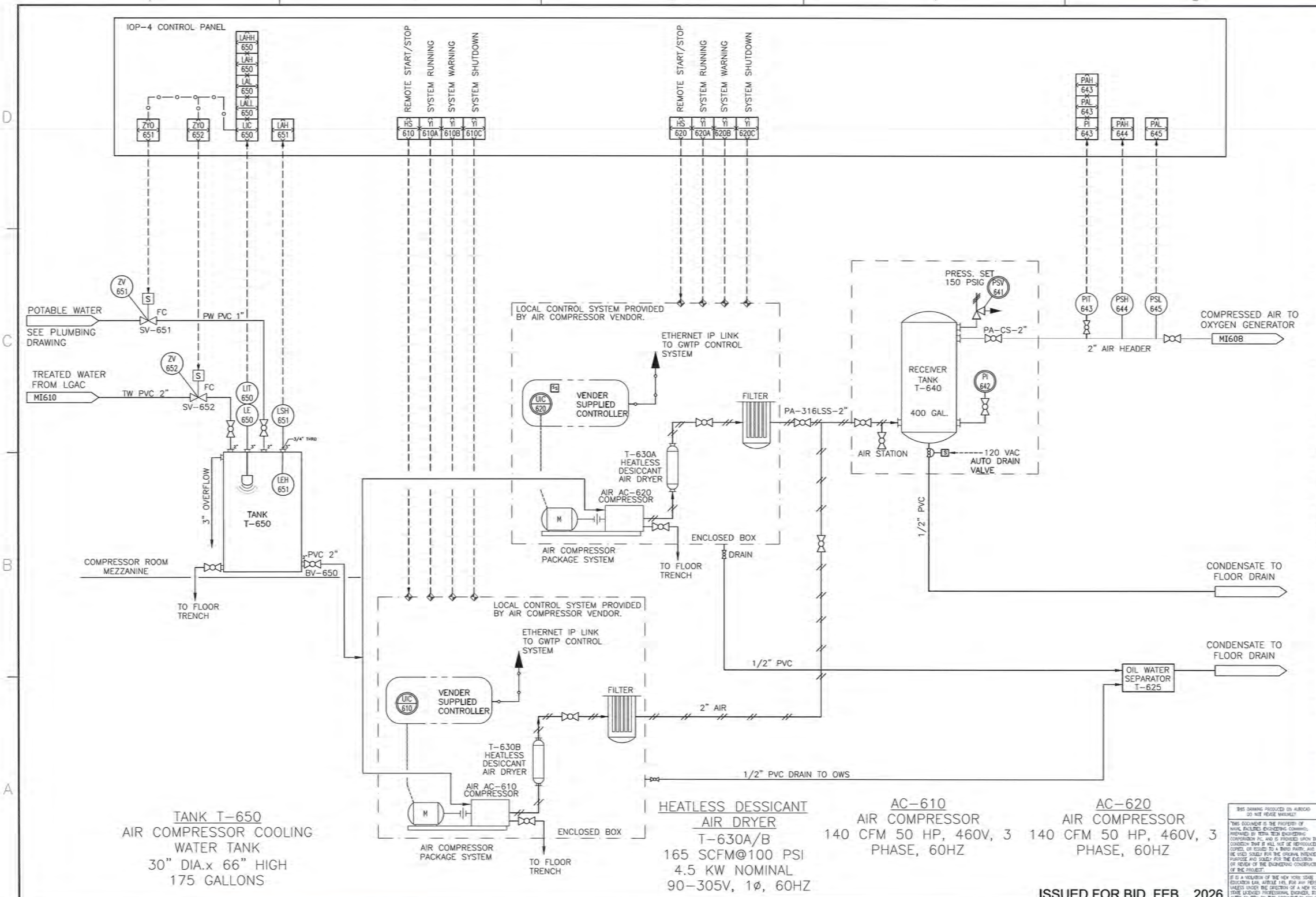
IOP-4 CONTROL PANEL
LAHH 650
LAH 650
LAL 650
LALL 650
ZYO 651
ZYO 652
LIC 650
LAH 651
REMOTE START/STOP
SYSTEM RUNNING
SYSTEM WARNING
SYSTEM SHUTDOWN
HS 610
YI 610A
YI 610B
YI 610C
HS 620
YI 620A
YI 620B
YI 620C
PAH 643
PAL 643
PI 643
PAH 644
PAL 645
ZV 651
S
POTABLE WATER
SEE PLUMBING DRAWING
FC
SV-651
PW PVC 1"
ZV 652
TREATED WATER FROM LGAC
MI610
TW PVC 2"
SV-652
LIT 650
LE 650
LSH 651
LEH 651
3/4" THRD
3" OVERFLOW
TANK T-650
COMPRESSOR ROOM MEZZANINE
TO FLOOR TRENCH
PVC 2"
BV-650
LOCAL CONTROL SYSTEM PROVIDED BY AIR COMPRESSOR VENDOR.
ETHERNET IP LINK TO GWTP CONTROL SYSTEM
UIC 620
VENDER SUPPLIED CONTROLLER
FILTER
T-630A HEATLESS DESICCANT AIR DRYER
AIR AC-620 COMPRESSOR
M
AIR COMPRESSOR PACKAGE SYSTEM
ENCLOSED BOX
DRAIN
TO FLOOR TRENCH
PA-316LSS-2"
PRESS. SET 150 PSIG
PSV 641
PA-CS-2"
RECEIVER TANK T-640
400 GAL.
PI 642
AIR STATION
120 VAC AUTO DRAIN VALVE
1/2" PVC
PIT 643
PSH 644
PSL 645
2" AIR HEADER
COMPRESSED AIR TO OXYGEN GENERATOR
MI608
CONDENSATE TO FLOOR DRAIN
CONDENSATE TO FLOOR DRAIN
OIL WATER SEPARATOR T-625
UIC 610
T-630B HEATLESS DESICCANT AIR DRYER
AIR AC-610 COMPRESSOR
2" AIR
1/2" PVC DRAIN TO OWS
TANK T-650
AIR COMPRESSOR COOLING WATER TANK
30" DIA.x 66" HIGH
175 GALLONS
HEATLESS DESSICANT AIR DRYER
T-630A/B
165 SCFM@100 PSI
4.5 KW NOMINAL
90-305V, 1ø, 60HZ
AC-610
AIR COMPRESSOR
140 CFM 50 HP, 460V, 3 PHASE, 60HZ
AC-620
AIR COMPRESSOR
140 CFM 50 HP, 460V, 3 PHASE, 60HZ
ISSUED FOR BID FEB., 2026
NAVFAC
TETRA TECH
As per document from Nicole Coward NAVFAC, MIDLANT PLL/EV3
NAVAL FACILITIES ENGINEERING SYSTEMS COMMAND - MID - ATLANTIC
NAVAL WEAPONS INDUSTRIAL RESERVE PLANT BETHPAGE, NEW YORK
PHASE III - TREATMENT PLANT
TREATMENT BUILDING COMPRESSED AIR SYSTEM
SCALE AS NOTED
112G08005
MI618

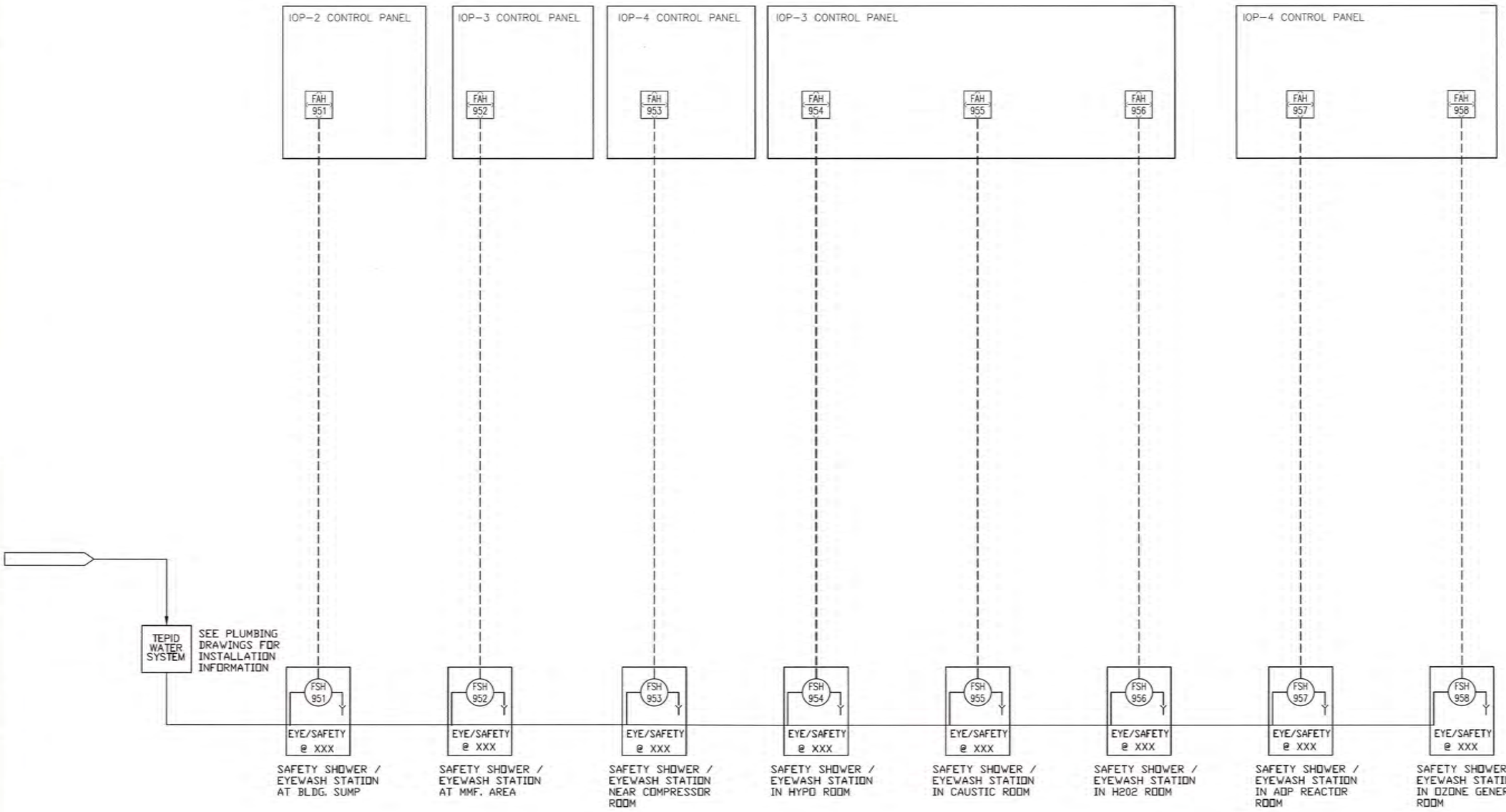

EYEWASH / SAFETY SHOWERS

NAVFAC

STATE OF NEW YORK
080336
LICENSED PROFESSIONAL ENGINEER

TETRA TECH
www.tetratech.com
4433 CORPORATION LANE, SUITE 300
VIRGINIA BEACH, VA 23462
PHONE: (757) 461-3768 FAX: (757) 461-4348
A/E INFO

APPROVED
FOR COMMANDER NAVFAC

ACTIVITY
As per document from Nicole Coward
NAVFAC, MIDLANT PLL/EV3

SATISFACTORY TO SAE 03/24/2026
DES --- DRW --- CHK ---
PM/CM
BRANCH MANAGER
CHIEF ENG/ARCH
FIRE PROTECTION

NAVAL FACILITIES ENGINEERING SYSTEMS COMMAND - MID - ATLANTIC
NAVAL INDUSTRIAL RESERVE ORDNANCE PLANT
GM39
NAVAL WEAPONS INDUSTRIAL RESERVE PLANT BETHPAGE, NEW YORK
PHASE III - TREATMENT PLANT
TREATMENT BUILDING SAFETY SHOWERS

SCALE: AS NOTED
PROJECT NO.: -
CONSTR. CONTR. NO. 112G08005
NAVFAC DRAWING NO. ##
SHEET OF -

MI619

THIS DRAWING PRODUCED ON AUTOCAD
DO NOT REVISE MANUALLY

"THIS DOCUMENT IS THE PROPERTY OF NAVAL FACILITIES ENGINEERING COMMAND, PREPARED BY TETRA TECH ENGINEERING CORPORATION PC, AND IS PROVIDED UPON THE CONDITION THAT IT WILL NOT BE REPRODUCED, COPIED, OR ISSUED TO A THIRD PARTY, AND WILL BE USED SOLELY FOR THE ORIGINAL INTENDED PURPOSE AND SOLELY FOR THE EXECUTION OR REVIEW OF THE ENGINEERING CONSTRUCTION OF THE PROJECT".

IT IS A VIOLATION OF THE NEW YORK STATE EDUCATION LAW, ARTICLE 145, FOR ANY PERSON UNLESS UNDER THE DIRECTION OF A NEW YORK STATE LICENSED PROFESSIONAL ENGINEER, TO ALTER AN ITEM ON THIS DOCUMENT IN ANY WAY.

ISSUED FOR BID FEB., 2026

CAUTION: IF SHEET IS LESS THAN 24"x22" USE GRAPHIC SCALE

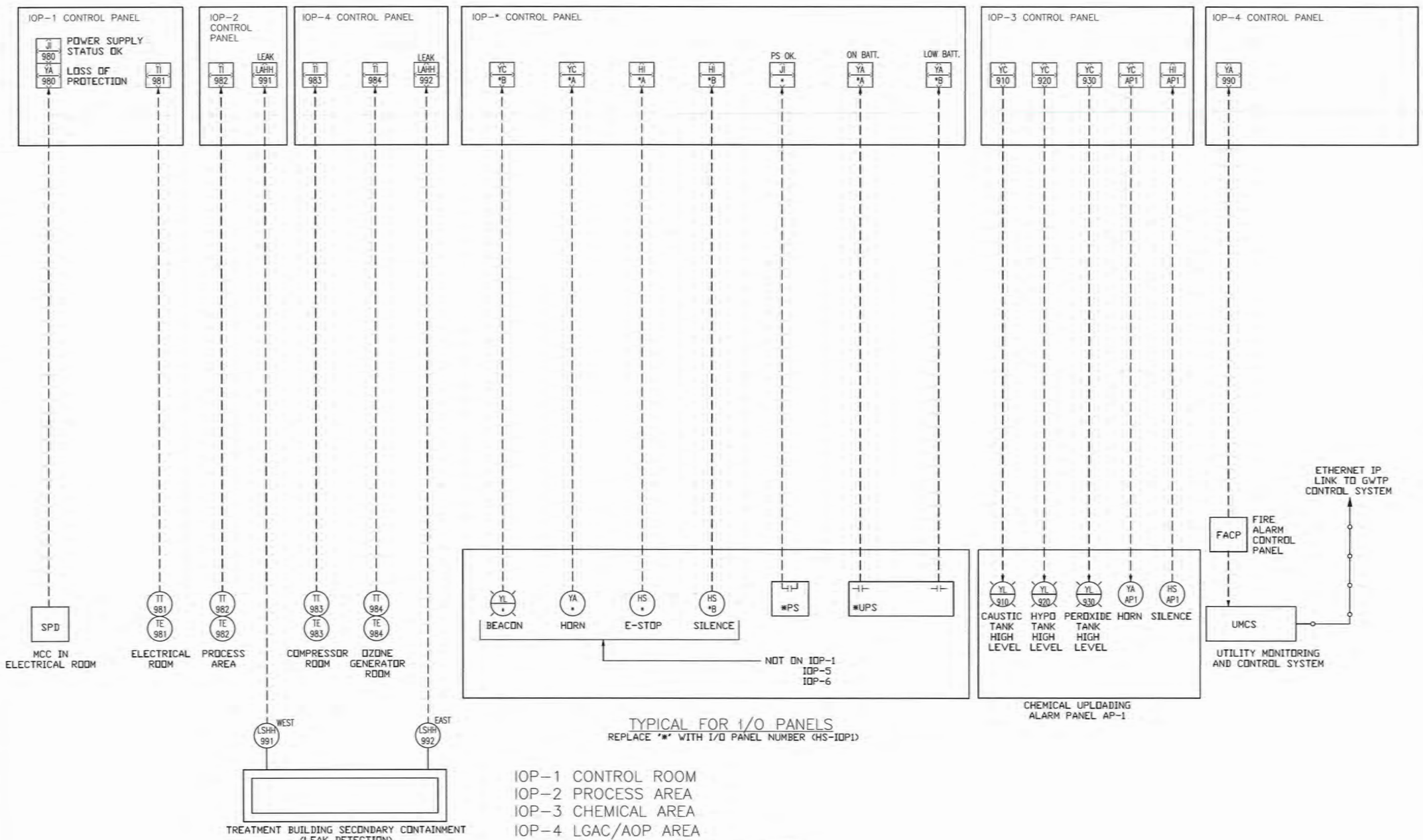

TYPICAL FOR I/O PANELS
REPLACE '*' WITH I/O PANEL NUMBER (HS-IOP1)

IOP-1 CONTROL ROOM
IOP-2 PROCESS AREA
IOP-3 CHEMICAL AREA
IOP-4 LGAC/AOP AREA
IOP-5 RECOVERY WELL RW-9 AREA
IOP-6 RECOVERY WELL RW-10A AREA

ISSUED FOR BID FEB., 2026

NAVFAC

STATE OF NEW YORK
080336
LICENSED PROFESSIONAL ENGINEER

TETRA TECH
www.tetratech.com
4430 CORPORATION LANE, SUITE 300
VIRGINIA BEACH, VA 23462
PHONE: (757) 461-2068 FAX: (757) 461-4148
A/E INFO

APPROVED
FOR COMMAND NAVFAC
ACTIVITY
As per document from Nicole Coward NAVFAC, MIDLANT PLL/EV3
SUBMITTED TO DATE 03/24/2026
DES --- DRW --- CHK ---
PM/DM
BRANCH MANAGER
CHIEF ENG/ARCH
FIRE PROTECTION

NAVAL FACILITIES ENGINEERING SYSTEMS COMMAND - MID - ATLANTIC
NAVAL INDUSTRIAL RESERVE ORDNANCE PLANT
NAVAL WEAPONS INDUSTRIAL RESERVE PLANT BETHPAGE, NEW YORK
PHASE III - TREATMENT PLANT
BUILDING EQUIPMENT AND CONTROL PANEL MONITORING

SCALE AS NOTED
EFPROJECT NO.:
CONTR. CONTR. NO. 112G08005
NAVFAC DRAWING NO. ##
SHEET OF
MI620

THIS DRAWING PRODUCED ON AUTOCAD
DO NOT MODIFY MANUALLY

THIS DOCUMENT IS THE PROPERTY OF NAVAL FACILITIES ENGINEERING COMMAND, PREPARED BY TETRA TECH ENGINEERING CORPORATION PC, AND IS PROVIDED UPON THE CONDITION THAT IT WILL NOT BE REPRODUCED, COPIED, OR ISSUED TO A THIRD PARTY, AND WILL BE USED SOLELY FOR THE ORIGINAL INTENDED PURPOSE AND SOLELY FOR THE EXECUTION OR REVIEW OF THE ENGINEERING CONSTRUCTION OF THE PROJECT.

IT IS A VIOLATION OF THE NEW YORK STATE EDUCATION LAW, ARTICLE 145, FOR ANY PERSON, UNLESS UNDER THE DIRECTION OF A NEW YORK STATE LICENSED PROFESSIONAL ENGINEER, TO ALTER AN ITEM ON THIS DOCUMENT IN ANY WAY.

CAUTION! SHEET IS LESS THAN 34"x22" USE GRAPHIC SCALE

:\Projects\Phase -3\Drawings\Process\PID_.dwg, 4/22/2026 3:59:01 PM, Adobe BW PDF.pc3

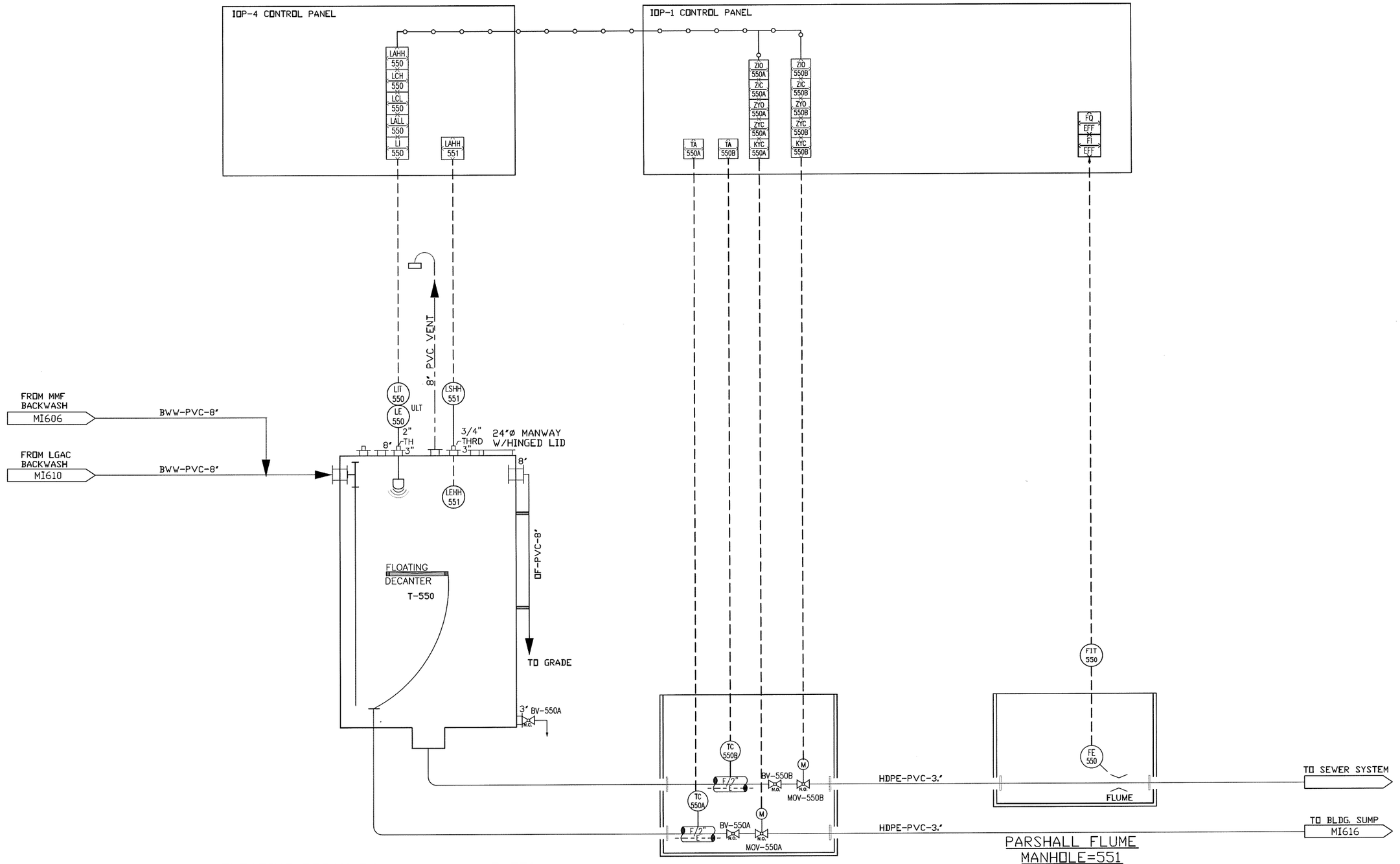

THIS DRAWING PRODUCED ON AUTOCAD
DO NOT REVISE MANUALLY

"THIS DOCUMENT IS THE PROPERTY OF NAVAL FACILITIES ENGINEERING COMMAND, PREPARED BY TETRA TECH ENGINEERING CORPORATION PC, AND IS PROVIDED UPON THE CONDITION THAT IT WILL NOT BE REPRODUCED, COPIED, OR ISSUED TO A THIRD PARTY, AND WILL BE USED SOLELY FOR THE ORIGINAL INTENDED PURPOSE AND SOLELY FOR THE EXECUTION OR REVIEW OF THE ENGINEERING CONSTRUCTION OF THE PROJECT".

IT IS A VIOLATION OF THE NEW YORK STATE EDUCATION LAW, ARTICLE 145, FOR ANY PERSON, UNLESS UNDER THE DIRECTION OF A NEW YORK STATE LICENSED PROFESSIONAL ENGINEER, TO ALTER AN ITEM ON THIS DOCUMENT IN ANY WAY.

ISSUED FOR BID FEB., 2026

CAUTION:IF SHEET IS LESS THAN 34"x22" USE GRAPHIC SCALE

NAVFAC

STATE OF NEW YORK
DAVID DANIEL BRAVACE
080336
LICENSED PROFESSIONAL ENGINEER
SEAL

TETRA TECH
www.tetratech.com
4433 CORPORATION LANE, SUITE 300
VIRGINIA BEACH, VA 23462
PHONE: (757) 461-3768 FAX: (757) 461-4148
A/E INFO

APPROVED
FOR COMMANDER NAVFAC
ACTIVITY
As per document from Nicole Coward
NAVFAC, MIDLANT PLL/EV3
SATISFACTORY TO DATE 03/24/2026
DES | DRW | CHK
PM/DM
BRANCH MANAGER
CHIEF ENG/ARCH
FIRE PROTECTION

GMOS
NAVAL FACILITIES ENGINEERING SYSTEMS COMMAND - MID - ATLANTIC
NAVAL INDUSTRIAL RESERVE ORDNANCE PLANT
NAVAL WEAPONS INDUSTRIAL RESERVE PLANT BETHPAGE, NEW YORK
PHASE III - TREATMENT PLANT
BACKWASH WASTE TANK

SCALE: AS NOTED
EPROJECT NO.: -
CONSTR. CONTR. NO. 112G08005
NAVFAC DRAWING NO. ##
SHEET OF -
MI621

NOTIFICATION: THIS PAGE CONTAINS SENSITIVE BUT UNCLASSIFIED INFORMATION WHICH IS PROTECTED BY THE FREEDOM OF INFORMATION ACT

EXEMPTION 3. (5 USC 552(b)(3))

Information exempted by other statutes

10 USC Section 130(e) Treatment of Certain Critical Infrastructure Security Information

Page 54

TO REQUEST A COPY OF THE DOCUMENT PLEASE CONTACT

Department of the Navy
Freedom of Information Act Office

http://www.secnav.navy.mil/foia/Pages/default.aspx

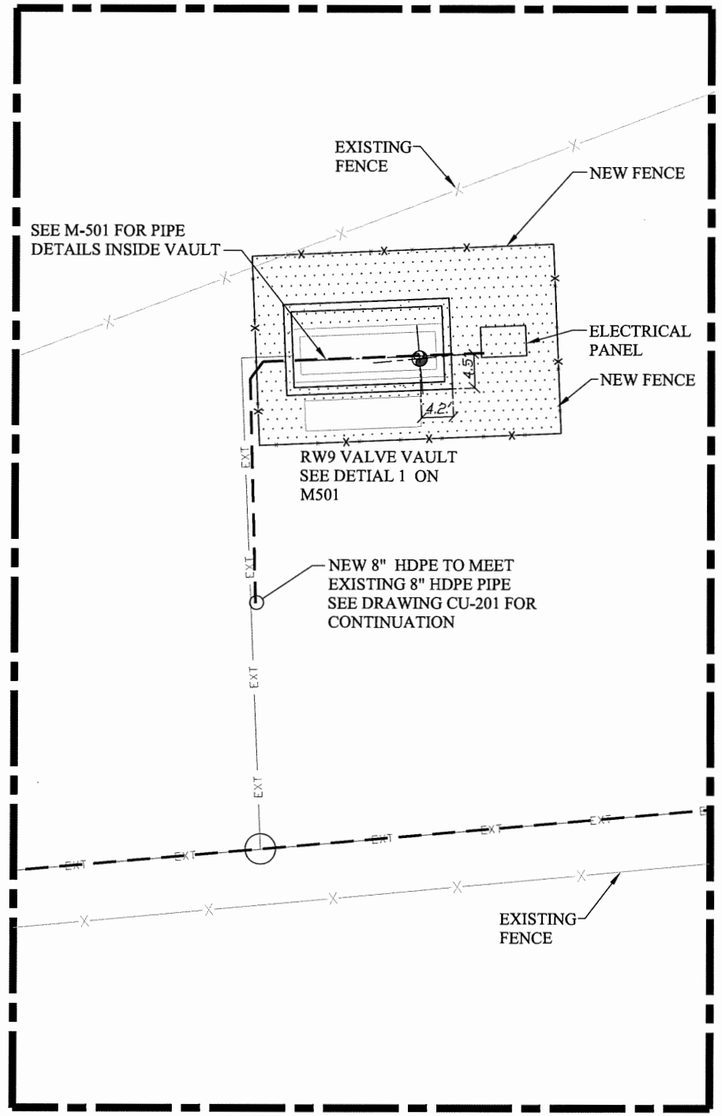

RW9 UNDERGROUND PROCESS PIPING PLAN
SCALE NTS

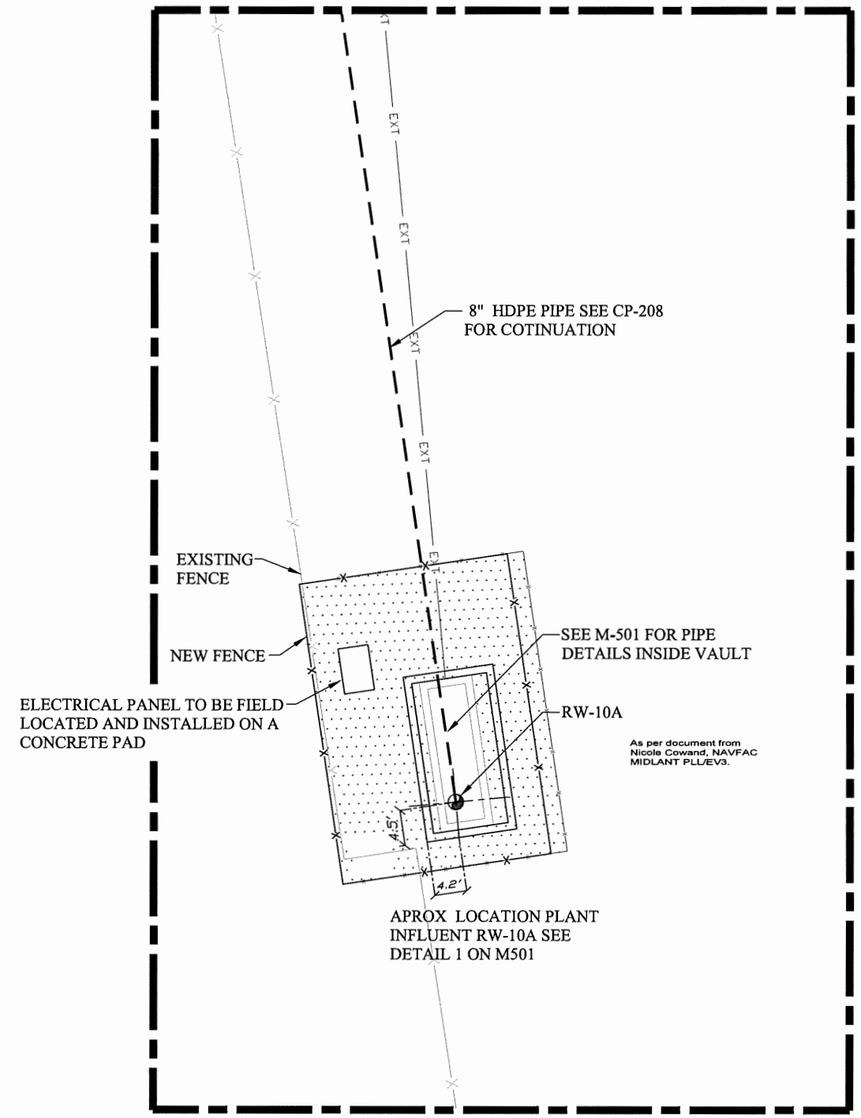

RW10A UNDERGROUND PROCESS PIPING PLAN
SCALE NTS

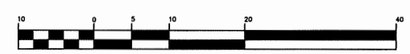

HOR.: 1 inch = 10 ft.
GRAPHIC SCALE

ISSUED FOR BID - FEB. 2026

THIS DRAWING PRODUCED ON AUTOCAD DO NOT REVISE MANUALLY

"THIS DOCUMENT IS THE PROPERTY OF NAVAL FACILITIES ENGINEERING COMMAND, PREPARED BY TETRA TECH ENGINEERING CORPORATION PC, AND IS PROVIDED UPON THE CONDITION THAT IT WILL NOT BE REPRODUCED, COPIED, OR ISSUED TO A THIRD PARTY, AND WILL BE USED SOLELY FOR THE ORIGINAL INTENDED PURPOSE AND SOLELY FOR THE EXECUTION OR REVIEW OF THE ENGINEERING CONSTRUCTION OF THE PROJECT".

IT IS A VIOLATION OF THE NEW YORK STATE EDUCATION LAW, ARTICLE 145, FOR ANY PERSON, UNLESS UNDER THE DIRECTION OF A NEW YORK STATE LICENSED PROFESSIONAL ENGINEER, TO ALTER AN ITEM ON THIS DOCUMENT IN ANY WAY.

NAVFAC

LICENSED PROFESSIONAL ENGINEER 060356 4/24/26

TETRA TECH
4433 CORPORATION LANE, SUITE 300
VIRGINIA BEACH, VA 23462
PHONE: (757) 461-3768 FAX: (757) 461-4148
A/E INFO

APPROVED
FOR COMMANDER NAVFAC
ACTIVITY
As per document from Nicole Cowand, NAVFAC MIDLANT PLL/EV3
SATISFACTORY TO DATE 3/24/2026
DES HKM DRW KW CHK
PM/DM
BRANCH MANAGER
CHIEF ENG/ARCH
FIRE PROTECTION

NAVAL FACILITIES ENGINEERING SYSTEMS COMMAND - MID - ATLANTIC

PHASE III - TREATMENT PLANT

MECHANICAL VALVE VAULT RW9 & RW10A ORIENTATION

SCALE: AS NOTED
EPROJECT NO.:
CONSTR. CONTR. NO.
NAVFAC DRAWING NO. ##
SHEET ## OF
MC002

ELECTRICAL LEGEND

GENERAL

- DEMOLITION AND NEW WORK NOTE - REFER TO "DEMOLITION NOTES" AND "NEW WORK NOTES" FOR EACH SHEET
- SPECIALTY NOTE - REFER TO "SPECIALTY NOTES" FOR EACH SHEET
- GENERAL NOTE - REFER TO "GENERAL NOTES" FOR EACH SHEET
- OBJECTS ON DRAWINGS AT THIS LINETYPE ARE CATEGORIZED AS NEW OR PROPOSED FOR CONSTRUCTION, UON.
- OBJECTS ON DRAWINGS AT THIS LINETYPE ARE CATEGORIZED AS EXISTING TO BE REMOVED-DEMOLISHED, UON.
- OBJECTS ON DRAWINGS AT THIS LINETYPE ARE CATEGORIZED AS EXISTING TO REMAIN, UON.
- NEW TO EXISTING CONNECTION
- REMOVE TO THIS POINT

LIGHTING

- XX — LUMINAIRE TYPE. SEE LUMINAIRE SCHEDULE, SHEET EL###.
- LED LUMINAIRE. (—| INDICATES BRACKET, WALL MOUNTED.)
- LED EMERGENCY LUMINAIRE. (—| INDICATES BRACKET, WALL MOUNTED.)
- HIGH INTENSITY DISCHARGE (H.I.D.) OR COMPACT FLUORESCENT LUMINAIRE. (—| INDICATES BRACKET, WALL MOUNTED.)
- 18 — LED EXIT LUMINAIRE. ARROW, WHEN USED, INDICATES DIRECTION. (—| INDICATES BRACKET, WALL MOUNTED.) FILLED IN QUADRANT(s) OF SYMBOL INDICATES NUMBER AND ORIENTATION OF ILLUMINATED FACES.
- EMERGENCY BATTERY POWERED LED LIGHTING UNIT.
- S# — TOGGLE SWITCH, 20A, 120/277V. MOUNT 48" AFF UON. SUBSCRIPT "2" = 2 WAY, "3" = 3 WAY, "4" = 4 WAY.
- SD — DIMMER SWITCH. (WATTAGE AS REQUIRED TO CONTROL THE LUMINAIRE(S) CONNECTED UON.) MOUNT 48" AFF UON.
- SOS — OCCUPANCY SENSOR CONTROLLER, DUAL TECHNOLOGY. WALL MOUNTED 48" AFF UON.
- OS — OCCUPANCY SENSOR, DUAL TECHNOLOGY. CEILING MOUNTED UON.
- TS — TIME SWITCH
- P — PHOTOCELL
- 120V LED LIGHTING FIXTURE

SECURITY

- SECURITY CAMERA: CEILING MOUNTED
- SECURITY CAMERA: WALL MOUNTED
- SECURITY CAMERA: EXTERIOR WALL/CORNER MOUNTED
- CR — CARD READER
- DC — DOOR CONTACT POSITION SWITCH
- DS — DOOR STRIKE
- SYSTEMS PUSH BUTTON

POWER

- 30A, 120V SINGLE OUTLET NEMA 6-30 WITH MATCHING PLUG.
- 20A, 120V DUPLEX CONVENIENCE RECEPTACLE. MOUNT 18" AFF UON. 'GFI' DENOTES INTERNAL GROUND FAULT INTERRUPTER, 'WP' DENOTES WEATHER PROOF ENCLOSURE AND 'C' DENOTES FLUSH MOUNTED IN CEILING
- 20A, 120V DUPLEX CONVENIENCE RECEPTACLE UTILIZING GROUND FAULT PROTECTION. 'CH' DENOTES MOUNT 6" ABOVE COUNTER UON. 'WP' DENOTES WEATHER PROOF ENCLOSURE
- QUADRUPLEX CONVENIENCE RECEPTACLE MOUNTED IN TWO-GANG OUTLET BOX - EACH RATED 20A, 125 VOLTS WITH SINGLE COVER PLATE, MOUNT 18" AFF, UON.
- 20A, 120V FLUSH FLOOR DUPLEX RECEPTACLE
- SPECIAL PURPOSE RECEPTACLE. NEMA 14-30R, RATED 30A, 125/250V
- J — JUNCTION BOX. MINIMUM 4" SQUARE X 2 1/8" SIZE PER NEC.
- J — SYSTEMS FURNITURE CONNECTION.
- GROUND BAR
- CEILING FAN, THREE SPEED REVERSIBLE

EQUIPMENT CONNECTIONS

- E — EQUIPMENT CONNECTION. REFER TO EP603 FOR ADDITIONAL INFORMATION ON EQUIPMENT TO BE SERVED.
- M — MOTOR CONNECTION. HP AS INDICATED.
- SM — MOTOR RATED SWITCH OR MANUAL MOTOR STARTER WITH OVERLOADS.
- MAGNETIC MOTOR STARTER
- MANUAL MOTOR STARTER
- 3P 30/20 3R — DISCONNECT SWITCH. 3P = NO. OF POLES, 30 = SWITCH RATING, 20 = FUSE RATING (NF = INDICATES NON-FUSED), 3R INDICATES NEMA RATING.
- DISCONNECT SWITCH PROVIDED INTEGRAL WITH EQUIPMENT
- VFD — VARIABLE FREQUENCY DRIVE
- VSD — VARIABLE SPEED DRIVE
- ~~EMERGENCY STOP PUSHBUTTON WITH LOCK-OUT. TAG-OUT~~

WIRE, CONDUIT, AND RACEWAY

- (H_2O_2) OXIDANT PUMP
- BRANCH CIRCUIT OR FEEDER WIRING IN CONDUIT. NO TICK MARKS INDICATE 2-#12 CONDUCTORS & 1-#12 GND. IN 1/2" CONDUIT UON. CONDUITS LARGER THAN 1/2" & WIRE LARGER THAN #12 SHALL BE INDICATED.
- ~~CONDITIONING PUMP~~
- V — VENDOR SUPPLIED
- L2A-1,3 — HOMERUN TO PANEL. PANEL & CIRCUIT DESIGNATIONS AS INDICATED.
- T — 120V THERMOSTAT
- CONDUIT TURNED UP
- CONDUIT TURNED DOWN
- LADDER RACK CABLE TRAY, SIZE AND TYPE AS INDICATED.
- WIRE BASKET CABLE TRAY, SIZE AND TYPE AS INDICATED.

DISTRIBUTION

- 208Y/120V PANELBOARD.
- 240Y/120V PANELBOARD.
- 480Y/277V PANELBOARD.
- T — DRY-TYPE TRANSFORMER. 'T' DENOTES TRANSFORMER IDENTIFICATION

TELEPHONE/DATA

- (1) TELEPHONE OUTLET. MOUNT 48" AFF. UON.
- (2) DATA OUTLET. MOUNT 18" AFF. UON.
- TELEPHONE TERMINAL BACKBOARD
- LAN AND DATA SYSTEM MULTI-PORT PATCH PANEL.
- TYPE "F" CONNECTOR FOR CABLE TELEVISION. SYSTEM MOUNTED IN SINGLE GANG BOX WITH FACEPLATE.
- TMGB — TELECOMMUNICATIONS MAIN GROUNDING BUSBAR
- TGB — TELECOMMUNICATIONS GROUNDING BUSBAR

LIGHTNING PROTECTION

- GROUND BAR
- GROUND ROD
- GROUND ROD AND TEST WELL
- AIR TERMINAL
- BOND CONNECTION EXOTHERMICALLY WELD, UON.
- BURIED GROUND CABLE #2/0 BARE
- —G—G— GROUND CONDUCTOR - DESCRIPTION AS INDICATED.
- —LP—LP— MAIN LIGHTNING CONDUCTOR - DESCRIPTION AS INDICATED.
- —B—B— BONDING CONDUCTOR - DESCRIPTION AS INDICATED.
- —D—D— DOWN CONDUCTOR - DESCRIPTION AS INDICATED.

SITE

- MH — MANHOLE
- HH — HANDHOLE
- PB — PULLBOX
- DUCTBANK SECTION LOOKING IN DIRECTION OF ARROWS
  - SPARE DUCT (TYPICAL)
  - HEAVY LINE INDICATES BOTTOM OF DUCT.
  - EXISTING CABLE DESIGNATION (TYPICAL) DESCRIPTION PER CABLE SCHEDULE, SHEET ES###
  - OCCUPIED DUCT, UNIDENTIFIED CABLE
  - NEW CABLE DESIGNATION (TYPICAL) DESCRIPTION PER CABLE SCHEDULE, SHEET ES###
- —UC— UNDERGROUND COMMUNICATION 1" DIRECT BURIED CONDUIT
- —UP— UNDERGROUND PRIMARY CONCRETE ENCASED IN DUCTBANK SEE CABLE SCHEDULE SHEET ES###
- —US— UNDERGROUND SECONDARY CONCRETE ENCASED IN DUCTBANK SEE CABLE SCHEDULE SHEET ES###
- —UL— UNDERGROUND LIGHTING CIRCUIT, 2#10, 1#10G, 2"C UON.
- —OC— OVERHEAD COMMUNICATION
- —OP— OVERHEAD PRIMARY
- —OS— OVERHEAD SECONDARY
- —OL— OVERHEAD LIGHTING
- —OH— OVERHEAD LINE
- LIGHTING POLE WITH LUMINAIRE AND INTEGRAL PHOTOCELL
- T — PAD MOUNTED TRANSFORMER. 'T' DENOTES TRANSFORMER IDENTIFICATION
  - HEAVY LINE INDICATES FRONT OF TRANSFORMER
- PAD MOUNTED SWITCH
- UTILITY POLE
- T — UTILITY POLE MOUNTED TRANSFORMER
- PB — PULLBOX

ABBREVIATIONS

1/C	ONE CONDUCTOR
A	AMPERAGE OR AMPS
AFF	ABOVE FINISHED FLOOR
AHU	AIR HANDLING UNIT
ARF	ABOVE RAISED FLOOR
BFG	BELOW FINISED GRADE
BH	BASEBOARD HEATER
BKR	BREAKER
C	CONDUIT
CB	CIRCUIT BREAKER
CKT	CIRCUIT
DWG	DRAWING
EA	EACH
EC	EMPTY CONDUIT
ELEC	ELECTRICAL
EMT	ELECTRICAL METALLIC TUBING
ENCL	ENCLOSURE
EQUIP	EQUIPMENT
EWC	ELECTRIC WATER COOLER
EWH	ELECTRIC WATER HEATER
EXIST	EXISTING
EXP	EXPLOSION PROOF EQUIPMENT
FCU	FAN COIL UNIT
FT	FEET
GFCI	GOVERNMENT FURNISHED CONTRACTOR INSTALLED
GFE	GOVERNMENT FURNISHED EQUIPMENT
GFGI	GOVERNMENT FURNISHED GOVERNMENT INSTALLED
GFI	GROUND FAULT INTERRUPTER
GND	GROUND
HGT	HEIGHT
HID	HIGH INTENSITY DISCHARGE
HP	HORSEPOWER
HUB	COMPUTER DISTRIBUTION HUB
LED	LIGHT EMITTING DIODE
LTS	LUMINAIRE
MCB	MAIN CIRCUIT BREAKER
MDP	MAIN DISTRIBUTION PANEL
MECH	MECHANICAL
MLO	MAIN LUGS ONLY
MTD	MOUNTED
MTG HT	MOUNTING HEIGHT
NEC	NATIONAL ELECTRICAL CODE
NF	NON FUSIBLE
NIC	NOT IN CONTRACT
NL	NIGHT LIGHT
NTS	NOT TO SCALE
OBI	OUTLET BASE INFEED
OHD	OVERHEAD DOOR
OS	OCCUPANCY SENSOR
PNL	PANEL
PNLBD	PANELBOARD
PVC	POLYVINYL CHLORIDE CONDUIT
QU	QUANTITY
REC	RECEPTACLE
REQ'D	REQUIRED
RGS	RIGID GALVANIZED STEEL
RM	ROOM
SHT	SHEET
SUB	SUBSTATION
SWBD	SWITCHBOARD
T	TELEPHONE
TYP	TYPICAL
UON	UNLESS OTHERWISE NOTED
V	VOLTAGE OR VOLTS
VRF	VARIABLE REFRIGERANT FLOW UNIT
W	WIRE
WP	WEATHERPROOF
WW	WIREWAY (TROUGH)
X	IN SCHEDULES, ITEM NOT APPLICABLE
XFMR	TRANSFORMER
Ø	PHASE

GENERAL NOTES

1. ALL ELECTRICAL WORK AND MATERIAL IS NEW AND MUST BE PROVIDED BY THE CONTRACTOR UON.
2. AN EQUIPMENT GROUND WIRE MUST BE RUN WITH FEEDERS AND BRANCH CIRCUITS.
3. WIRING MUST BE AS PER NATIONAL ELECTRICAL CODE (NEC).
4. ELECTRICAL EQUIPMENT MUST BE IDENTIFIED AND LABELED.
5. FEEDERS/CIRCUITS MUST BE IDENTIFIED AT EACH END OF THE WIRE AND AT EVERY SPLICE OR JUNCTION/PULL BOX.
6. PROVIDE NAMEPLATES ON THE EXTERIOR OF ELECTRICAL PANELS AND ENCLOSURES AS FOLLOWS:

PANEL XXXXX	DEVICE ID
100A, 208Y/120V-30, 4W	DEVICE RATING
FEEDS FROM PANEL MDP	POWER SOURCE
INSTALLED 2019	INSTALLATION DATE
DRAWING NO. ##,###,###	NAVFAC DRAWING NUMBER

FOR DISCONNECT SWITCHES AND MOTOR STARTERS, THE TOP LINE SHALL BE THE NAME/DESIGNATION OF EQUIPMENT BEING FED BY SAME.

7. PROVIDE NEW TYPED DIRECTORIES FOR PANELS (NEW OR EXISTING) INCLUDED IN THIS PROJECT.
8. INTERIOR WIRING SYSTEMS MUST BE CONCEALED WITH FLUSH MOUNTED BOXES/DEVICES, UON.
9. DRAWINGS ARE BASED ON EXISTING BUILDING PLANS AND FIELD INVESTIGATIONS. CONTRACTOR MUST VISIT THE EXISTING BUILDING AND ACQUAINT HIMSELF/HERSELF WITH THE EXISTING CONDITIONS. CONTRACTOR MUST EXAMINE DRAWINGS TO AVOID CONFLICT.
10. COORDINATE LOCATION AND POWER REQUIREMENTS OF ELECTRICAL DEVICES WITH MECHANICAL, PLUMBING, ARCHITECTURAL AND FIRE PROTECTION DRAWINGS.
11. ELECTRICAL DEVICES SHOWN BUT NOT CIRCUITED MUST REMAIN ON THEIR EXISTING CIRCUIT.
12. PROVIDE ARC-FLASH LABELS ON ALL PANELS/DISCONNECT SWITCHES AS PER UFC 3-560-01 AND NFPA 70E. SEE DETAIL PLATE ON SHEET EP###.
13. AT A MINIMUM, SINGLE PHASE (120/208V) BRANCH CIRCUITS MUST CONSIST OF 2#12 & 1#1 GND. IN 1/2"C UON. THREE PHASE BRANCH CIRCUITS CONSIST OF 3#12 & 1#12 GND IN 1/2"C UON.
14. REFER TO PLANS FOR CONDUCTOR SIZING. COMPLY WITH THE FOLLOWING GUIDELINES FOR CONDUCTOR RUN LENGTHS:

    20A,120V CIRCUITS LONGER THAN 100' - USE #10 AWG TO LIMIT VOLTAGE DROP ON BRANCH CIRCUITS TO 3%

    20A, 120V CIRCUITS LONGER THAN 150' - USE #8 AWG TO LIMIT VOLTAGE DROP ON BRANCH CIRCUITS TO 3%

    20A, 277V CIRCUITS LONGER THAN 150' - USE #10 AWG TO LIMIT VOLTAGE DROP ON BRANCH CIRCUITS TO 3%
15. COORDINATE ELECTRICAL WORK WITH ARCHITECTURAL, MECHANICAL AND FIRE PROTECTION WORK PRIOR TO FABRICATION AND INSTALLATION TO PREVENT CONFLICTS. NOTIFY CONTRACTING OFFICER WHERE CONFLICTS ARE DISCOVERED PRIOR TO CONSTRUCTION AND BEFORE BEGINNING WORK IN THOSE AREAS. ALL CONFLICTS THAT ARISE DUE TO LACK OF COORDINATION MUST BE RECTIFIED BY THE CONTRACTOR AT NO COST TO THE GOVERNMENT.

ISSUED FOR BID FEBRUARY 2026

CAUTION:IF SHEET IS LESS THAN 34"x22" USE GRAPHIC SCALE

THIS DRAWING PRODUCED ON AUTOCAD DO NOT REVISE MANUALLY

"THIS DOCUMENT IS THE PROPERTY OF NAVAL FACILITIES ENGINEERING COMMAND. PREPARED BY TETRA TECH ENGINEERING CORPORATION PC, AND IS PROVIDED UPON THE CONDITION THAT IT WILL NOT BE REPRODUCED, COPIED, OR ISSUED TO A THIRD PARTY, AND WILL BE USED SOLELY FOR THE ORIGINAL INTENDED PURPOSE AND SOLELY FOR THE EXECUTION OR REVIEW OF THE ENGINEERING CONSTRUCTION OF THE PROJECT".

IT IS A VIOLATION OF THE NEW YORK STATE EDUCATION LAW, ARTICLE 145, FOR ANY PERSON, UNLESS UNDER THE DIRECTION OF A NEW YORK STATE LICENSED PROFESSIONAL ENGINEER, TO ALTER AN ITEM ON THIS DOCUMENT IN ANY WAY.

SYM	DESCRIPTION	DATE	APPR

NAVFAC

STATE OF NEW YORK — JOSEPH K. HOOVER — LICENSED PROFESSIONAL ENGINEER

TETRA TECH
www.tetratech.com
4433 CORPORATION LANE, SUITE 300
VIRGINIA BEACH, VA 23462
PHONE: (757) 463-3768 FAX: (757) 461-1148

APPROVED
FOR COMMANDER NAVFAC

ACTIVITY
As per document from Nicole Coward, NAVFAC MIDLANT PLL/EV3

SATISFACTORY TO DATE 4/24/2026

DES.:JKH/RLH DRW: RLH CHK: JKH

PM/CM:
BRANCH MANAGER:
CHIEF ENGIN/RCH:
FIRE PROTECTION:

DEPARTMENT OF THE NAVY
NAVAL FACILITIES ENGINEERING SYSTEMS COMMAND
NAVAL FACILITIES ENGINEERING SYSTEMS COMMAND – MID-ATLANTIC
NAVAL STATION - NORFOLK, VA
NAVAL WEAPONS INDUSTRIAL RESERVE PLANT
BETHPAGE, NEW YORK
PHASE III - GROUNDWATER TREATMENT PLANT
ELECTRICAL SYMBOLS, LEGEND, ABBREVIATIONS AND NOTES

SCALE: AS NOTED
EPROJECT NO.:
CONTR. CONTR. NO.
NAVFAC DRAWING NO.
SHEET 1 OF
E-001

DRAWFORM REVISION: 25 AUGUST 2009

4/20/2026 11:53:49 AM E-001
Autodesk Docs://1120360005-WE24 Navy- Bethpage NY-Phase III /E-1120360005_PHASEIII_GWTP_v2023.rvt

NOTIFICATION: THIS PAGE CONTAINS SENSITIVE BUT UNCLASSIFIED INFORMATION WHICH IS PROTECTED BY THE FREEDOM OF INFORMATION ACT

EXEMPTION 3. (5 USC 552(b)(3))

Information exempted by other statutes

10 USC Section 130(e) Treatment of Certain Critical Infrastructure Security Information

Pages 157-165

TO REQUEST A COPY OF THE DOCUMENT PLEASE CONTACT

Department of the Navy
Freedom of Information Act Office

http://www.secnav.navy.mil/foia/Pages/default.aspx

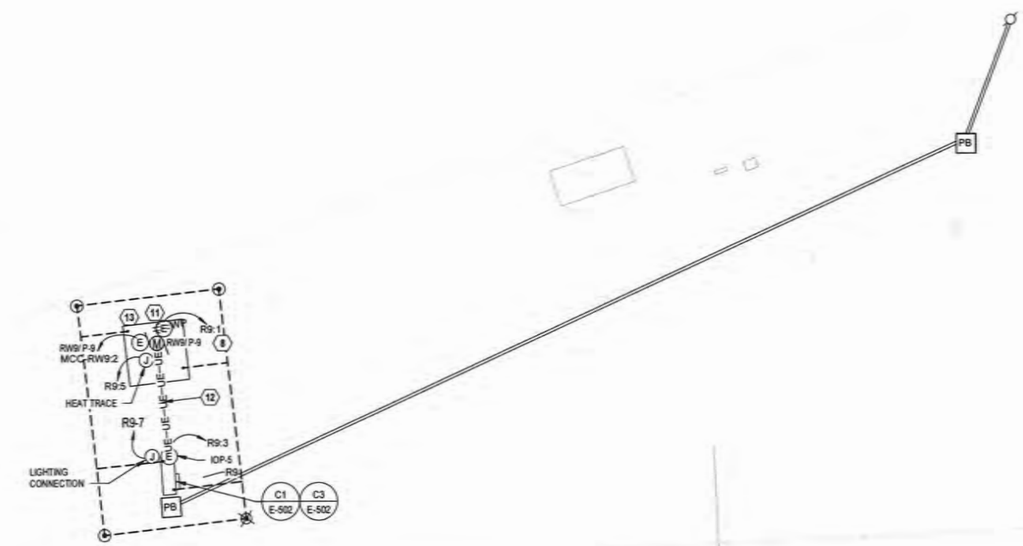

A1 ENLARGED ELECTRICAL SITE PLAN - RECOVERY WELL 9

NOT TO SCALE

CABLE SCHEDULE

LABEL	CB RATING	# OF SETS	CURRENT CARRYING CONDUCTORS		GROUNDING CONDUCTORS		CONDUIT
			#	SIZE	#	SIZE	
A200	200 A	1	2	#4/0	1	#4	2"
B30	30 A	1	3	#10	1	#10	3/4"
B60	60 A	1	3	#4	1	#10	1-1/4"
B150	150 A	1	3	#1/0	1	#6	2"
BS400	400 A	2	3	#3/0	1	#3	2"

(#) KEY NOTES:

1. PROVIDE 1" C WITH #1/0 G. PER NEC 250.
2. CONTRACTOR TO COORDINATE WITH UTILITY FOR FINAL CONNECTION WITH POLE MOUNTED TRANSFORMER.
3. UTILITY IS RESPONSIBLE FOR THE METER AND CT'S. CONTRACTOR TO COORDINATE WITH PSEG FOR THE INSTALLATION OF THE CT CABINET AND METER CABINET. COORDINATE WIRING WITH UTILITY FOR METER AND CT INSTALLATION. CONTRACTOR TO PROVIDE THE FREE-STANDING UNISTRUT.
4. ACTUAL FAULT CURRENT VALUES SHALL BE CALCULATED BY THE CONTRACTOR TO DETERMINE SHORT CIRCUIT CURRENT WITHSTANDING RATINGS IN SHOP DRAWING. SHORT CIRCUIT CALCULATION SHALL BE BASED ON ACTUAL LENGTHS OF FEEDERS, BRANCHES, SIZES, TYPES OF CABLES AND TYPES OF CONDUITS(MAGNETIC OR NON-MAGNETIC).
6. PROVIDE MCC's WITH A NETWORK SWITCH CAPABLE OF CONNECTING TO THE PLC VIA CAT 6. STARTERS AND VSDs IN THE MCC SHALL BE MONITORED AND CONTROLLED BY THE PLC. BREAKERS IN THE MCC SHALL BE MONITORED BY THE PLC. SEE I&C DRAWINGS FOR CONNECTION AND EQUIPMENT CONTROLS.
7. PROVIDE VSD WITH 3% LOAD AND LINE SIDE REACTORS.
8. FURNISH AND INSTALL NEW HEAT TRACE FROM HEAT TRACE CONTROLLER TO VAULT. REFER TO HEAT TRACE DETAILS ON SHEETS E-506. COORDINATE WITH THE MECHANICAL CONTRACTOR FOR THE EXACT LOCATION OF PIPING AND VALVES THAT REQUIRE HEAT TRACING.
9. REFER TO MCC-RW9 SCHEDULE ON E-602 FOR MCC BUCKET POSITION AND CIRCUIT NUMBERS.
10. PROVIDE VSDs SUITABLE FOR 240V SINGLE-PHASE INPUT AND 240V THREE-PHASE OUTPUT.
11. PROVIDE WEATHERPROOF GFCI RECEPTACLE SPECIFIED FOR WET LOCATION.
12. FURNISH AND INSTALL CABLE & CONDUIT TO RETURN WELL PUMP FROM MCC-RW9. REFER TO MCC-RW9 SINGLE LINE DIAGRAM. REFER TO SHEET E-602 FOR MCC-RW9 SCHEDULE. TRANSITION TO PUMP CABLE FROM CONDUIT AT VAULT.
13. PUMP RW9/P-9 IS EXISTING WITH NEW 230V, 3-PHASE MOTOR BEING INSTALLED UNDER THIS PROJECT. REMOVE EXISTING CONDUCTORS SERVING PUMP. INTERCEPT EXISTING CONDUIT ENTERING THE WELL AND EXTEND TO NEW MCC AS INDICATED.

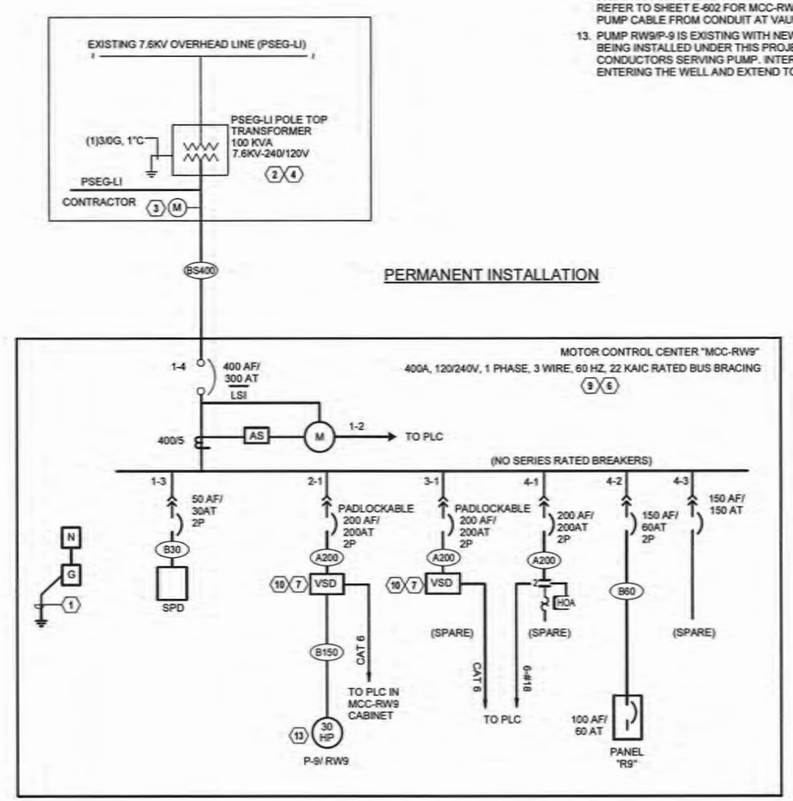

A3 REMOTE WELL 9 - SINGLE LINE DIAGRAM

NOT TO SCALE

ISSUED FOR BID FEBRUARY 2026

CAUTION:IF SHEET IS LESS THAN 34"x22" USE GRAPHIC SCALE

THIS DRAWING PRODUCED ON AUTOCAD DO NOT REVISE MANUALLY

"THIS DOCUMENT IS THE PROPERTY OF NAVAL FACILITIES ENGINEERING COMMAND, PREPARED BY TETRA TECH ENGINEERING CORPORATION PC, AND IS PROVIDED UPON THE CONDITION THAT IT WILL NOT BE REPRODUCED, COPIED, OR ISSUED TO A THIRD PARTY, AND WILL BE USED SOLELY FOR THE ORIGINAL INTENDED PURPOSE AND SOLELY FOR THE EXECUTION OR REVIEW OF THE ENGINEERING CONSTRUCTION OF THE PROJECT."

IT IS A VIOLATION OF THE NEW YORK STATE EDUCATION LAW, ARTICLE 145, FOR ANY PERSON, UNLESS UNDER THE DIRECTION OF A NEW YORK STATE LICENSED PROFESSIONAL ENGINEER, TO ALTER AN ITEM ON THIS DOCUMENT IN ANY WAY.

SYM	DESCRIPTION	DATE	APPR

NAVFAC

STATE OF NEW YORK · JOSEPH K. HOOVER · LICENSED PROFESSIONAL ENGINEER · SEAL

TETRA TECH
www.tetratech.com
4433 CORPORATION LANE, SUITE 300
VIRGINIA BEACH, VA 23462
PHONE: (757) 461-3788 FAX: (757) 461-4148
AE INFO

APPROVED
FOR COMMANDER NAVFAC
ACTIVITY
As per document from Nicole Cowand, NAVFAC MIDLANT PL/EV3
SATISFACTORY TO DATE 4/24/2026
DES. JKH/RLH DRW RLH CHK JKH
PM/CM
BRANCH MANAGER
CHIEF ENGIN/CH
FIRE PROTECTION

DEPARTMENT OF THE NAVY
NAVAL FACILITIES ENGINEERING SYSTEMS COMMAND
NAVAL FACILITIES ENGINEERING SYSTEMS COMMAND ~ MID-ATLANTIC
NAVAL STATION - NORFOLK, VA
NAVAL WEAPONS INDUSTRIAL RESERVE PLANT
BETHPAGE, NEW YORK

PHASE III - GROUNDWATER TREATMENT PLANT

PARTIAL SITE PLAN-EXTRACTION WELL RW9

SCALE: AS NOTED
EPROJECT NO.:
CONSTR. CONTR. NO.
NAVFAC DRAWING NO.
SHEET OF
E-402

DRAWING REVISION: 28 AUGUST 2002

4/20/2026 11:54:06 AM E-402
Autodesk Docs://1120080605-WE24 Navy- Bethpage NY-Phase III-E-1120080605_PHASEIII_GWTP_v2023.rvt

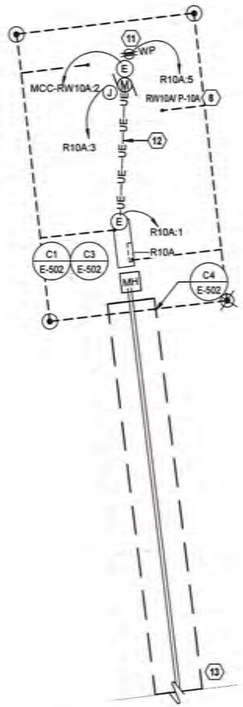

CABLE SCHEDULE

LABEL	CB RATING	# OF SETS	CURRENT CARRYING CONDUCTORS		GROUNDING CONDUCTORS		CONDUIT
			#	SIZE	#	SIZE	
A30	30 A	1	2	#10	1	#10	3/4"
A200	200 A	1	2	#4/0	1	#4	2"
A250	250 A	1	2	250KCMIL	1	#4	2"
B60	60 A	1	3	#4	1	#10	1-1/4"
B200	200 A	1	3	#3/0	1	#6	2-1/2"
BS400	400 A	2	3	#3/0	1	#3	2"

(#) KEY NOTES:

1. PROVIDE 1" C WITH #1/0 G. PER NEC 250.
2. CONTRACTOR TO COORDINATE WITH UTILITY FOR FINAL CONNECTION WITH POLE MOUNTED TRANSFORMER.
3. UTILITY IS RESPONSIBLE FOR THE METER AND CT'S. CONTRACTOR TO COORDINATE WITH PSEG FOR THE INSTALLATION OF THE CT CABINET AND METER CABINET. COORDINATE WIRING WITH UTILITY FOR METER AND CT INSTALLATION. CONTRACTOR TO PROVIDE THE FREE-STANDING UNISTRUT.
4. ACTUAL FAULT CURRENT VALUES SHALL BE CALCULATED BY THE CONTRACTOR TO DETERMINE SHORT CIRCUIT CURRENT WITHSTANDING RATINGS IN SHOP DRAWING. SHORT CIRCUIT CALCULATION SHALL BE BASED ON ACTUAL LENGTHS OF FEEDERS, BRANCHES, SIZES, TYPES OF CABLES AND TYPES OF CONDUITS(MAGNETIC OR NON-MAGNETIC).
5. PROVIDE WITH (1) SPARE CONDUIT. REFER TO C4/E-503.
6. PROVIDE MCC's WITH A NETWORK SWITCH CAPABLE OF CONNECTING TO THE PLC VIA CAT 6. STARTERS AND VSDs IN THE MCC SHALL BE MONITORED AND CONTROLLED BY THE PLC. BREAKERS IN THE MCC SHALL BE MONITORED BY THE PLC. SEE I&C DRAWINGS FOR CONNECTION AND EQUIPMENT CONTROLS.
7. PROVIDE VSD WITH 3% LOAD AND LINE SIDE REACTORS.
8. FURNISH AND INSTALL NEW HEAT TRACE FROM HEAT TRACE CONTROLLER TO VAULT. REFER TO HEAT TRACE DETAILS ON SHEETS E-506. COORDINATE WITH THE MECHANICAL CONTRACTOR FOR THE EXACT LOCATION OF PIPING AND VALVES THAT REQUIRE HEAT TRACING.
9. REFER TO MCC-RW9 SCHEDULE ON E-603 FOR MCC BUCKET POSITION AND CIRCUIT NUMBERS.
10. PROVIDE VSDs SUITABLE FOR 240V SINGLE-PHASE INPUT AND 240V THREE-PHASE OUTPUT.
11. PROVIDE WEATHERPROOF GFCI RECEPTACLE SPECIFIED FOR WET LOCATION.
12. FURNISH AND INSTALL CABLE & CONDUIT TO RETURN WELL PUMP FROM MCC-RW10A. REFER TO MCC-RW10A SINGLE LINE DIAGRAM. REFER TO SHEET E-603 FOR MCC-RW10A SCHEDULE. TRANSITION TO PUMP CABLE FROM CONDUIT AT VAULT.
13. POLE LOCATION TO BE DETERMINED. COORDINATE WITH PSEG. ASSUME POLE WILL BE WITHIN 200FT OF THE MCC FOR BIDDING PURPOSES.

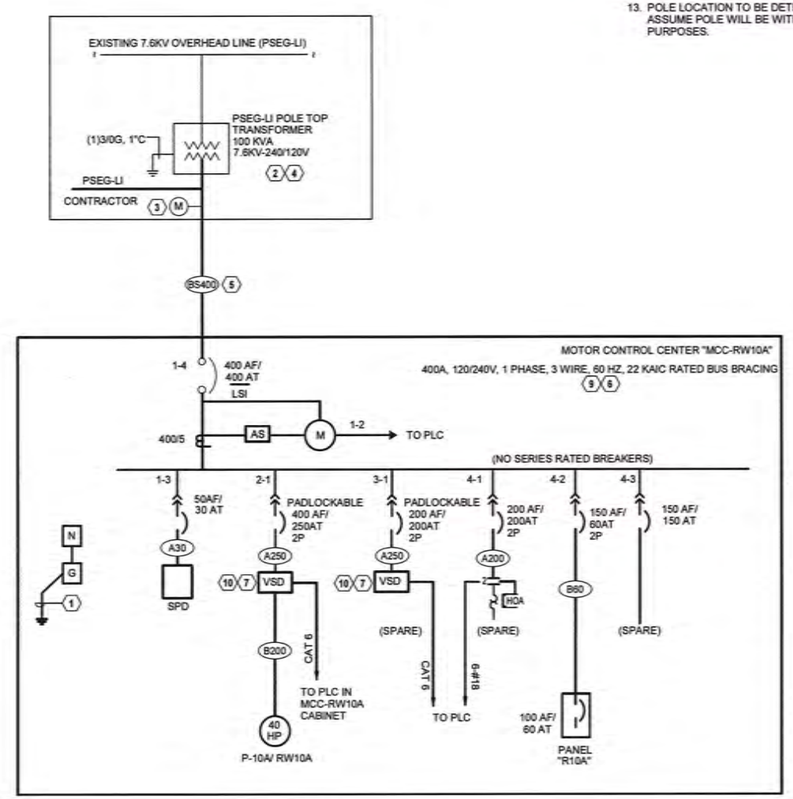

REFER TO SHEET E-100 FOR CONTINUATION

TRUE NORTH

A1 ENLAREGED ELECTRICAL SITE PLAN - RECOVERY WELL 10A

1/8" = 1'-0"

A3 REMOTE WELL 10A - SINGLE LINE DIAGRAM

NOT TO SCALE

ISSUED FOR BID FEBRUARY 2026

CAUTION:IF SHEET IS LESS THAN 34"x22" USE GRAPHIC SCALE

SYM	DESCRIPTION	DATE	APPR.

NAVFAC

STATE OF NEW YORK · JOSEPH K. HOOVER · LICENSED PROFESSIONAL ENGINEER · SEAL

TETRA TECH
www.tetratech.com
4403 CORPORATION LANE, SUITE 300
VIRGINIA BEACH, VA 23462
PHONE: (757) 461-3768 FAX: (757) 461-4148
HE INFO

APPROVED
FOR COMMANDER NAVFAC
ACTIVITY
As per document from Nicole Coward, NAVFAC MIDLANT PLL/EV3
SATISFACTORY TO DATE 4/24/2026
DES JKH/RLH DRW RLH CHK JKH
PM/CM
BRANCH MANAGER
CHIEF ENGINEER
FIRE PROTECTION

DEPARTMENT OF THE NAVY
NAVAL FACILITIES ENGINEERING SYSTEMS COMMAND
NAVAL FACILITIES ENGINEERING SYSTEMS COMMAND ~ MID-ATLANTIC
NAVAL STATION - NORFOLK, VA
NAVAL WEAPONS INDUSTRIAL RESERVE PLANT
BETHPAGE, NEW YORK
PHASE III - GROUNDWATER TREATMENT PLANT
PARTIAL SITE PLAN-EXTRACTION WELL RW10A

SCALE: AS NOTED
EPROJECT NO.:
CONSTR. CONTR. NO.
NAVFAC DRAWING NO.
SHEET E-403 OF

THIS DRAWING PRODUCED ON AUTOCAD DO NOT REVISE MANUALLY

"THIS DOCUMENT IS THE PROPERTY OF NAVAL FACILITIES ENGINEERING COMMAND, PREPARED BY TETRA TECH ENGINEERING CORPORATION PC, AND IS PROVIDED UPON THE CONDITION THAT IT WILL NOT BE REPRODUCED, COPIED, OR ISSUED TO A THIRD PARTY, AND WILL BE USED SOLELY FOR THE ORIGINAL INTENDED PURPOSE AND SOLELY FOR THE EXECUTION OR REVIEW OF THE ENGINEERING CONSTRUCTION OF THE PROJECT".

IT IS A VIOLATION OF THE NEW YORK STATE EDUCATION LAW, ARTICLE 145, FOR ANY PERSON, UNLESS UNDER THE DIRECTION OF A NEW YORK STATE LICENSED PROFESSIONAL ENGINEER, TO ALTER AN ITEM ON THIS DOCUMENT IN ANY WAY.

DRAWFORM REVISION: 28 AUGUST 2020

4/20/2026 11:54:10 AM E-403
Autodesk Docs://1123080005-WE24 Navy- Bethpage NY-Phase III /E-1123080005_PHASEIII_GWTP_v2023.rvt

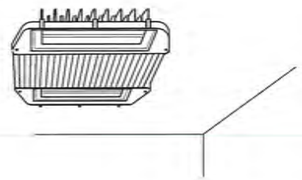

NOTE: THIS SKETCH IS A NON-PROPRIETARY GRAPHIC REPRESENTATION OF A LUMINAIRE THAT MAY MEET THE SPECIFICATION REQUIREMENTS. IT IS NOT INTENDED TO INDICATE A CERTAIN MANUFACTURER OR PREFERENCE.

LUMINAIRE REQUIREMENTS:

1. HOUSING - HEAVY GAUGE COLD ROLLED STEEL OR CAST ALUMINUM HOUSING.
2. OPTICS - POLYCARBONATE DIFFUSE LENS.
3. LIGHT SOURCE - SOLID STATE LEDS, 4000K CCT UON, MINIMUM 80 CRI UON, AND MINIMUM EFFICACY OF 140 LUMENS/WATT UON. INITIAL LUMEN OUTPUT AS INDICATED IN LUMINAIRE SCHEDULE.
4. DRIVER - REPLACEABLE, INTEGRAL, HIGH-EFFICIENCY DIMMABLE DRIVER WITH MINIMUM 0.9 PF, OPERATING VOLTAGE OF 120-277V, THERMAL MANAGEMENT, AND < 20% THD. ON/OFF CONTROL AND FULLY DIMMABLE DOWN TO 10% MINIMUM OR AS INDICATED IN LUMINAIRE SCHEDULE
5. CERTIFICATION - UL LISTED FOR DAMP OR WET LOCATION, ROHS COMPLIANT, DLC QUALIFIED. COMPLIES WITH IES LM79, LM80 AND TM21 TESTING STANDARDS.
6. MOUNTING - PENDANT, STEM, OR SURFACE MOUNTED WITH STAINLESS STEEL MOUNTING HARDWARE.
7. OPTIONS - INTEGRAL OCCUPANCY SENSOR, EMERGENCY BATTERY BACK-UP, VARIOUS OPTICAL DISTRIBUTIONS.

LED HIGH BAY INDUSTRIAL

TYPE 'A'

NOTE: THIS SKETCH IS A NON-PROPRIETARY GRAPHIC REPRESENTATION OF A LUMINAIRE THAT MAY MEET THE SPECIFICATION REQUIREMENTS. IT IS NOT INTENDED TO INDICATE A CERTAIN MANUFACTURER OR PREFERENCE.

LUMINAIRE REQUIREMENTS:

1. HOUSING - DIE-FORMED, COLD ROLLED STEEL. SIZE AS INDICATED IN LUMINAIRE SCHEDULE.
2. OPTICS - ACRYLIC OR POLYCARBONATE LENS AS INDICATED IN LUMINAIRE SCHEDULE.
3. LIGHT SOURCE - SOLID STATE LEDS, 3500K CCT UON, MINIMUM 80 CRI UON, AND MINIMUM EFFICACY OF 100 LUMENS/WATT UON. INITIAL LUMEN OUTPUT AS INDICATED IN LUMINAIRE SCHEDULE.
4. DRIVER - REPLACEABLE, INTEGRAL, HIGH-EFFICIENCY DRIVER WITH MINIMUM 0.9 PF, OPERATING VOLTAGE OF 120-277V, THERMAL MANAGEMENT, AND < 20% THD. ON/OFF CONTROL AND FULLY DIMMABLE DOWN TO 10% MINIMUM OR AS INDICATED IN LUMINAIRE SCHEDULE.
5. CERTIFICATION - UL LISTED FOR DRY OR DAMP LOCATION, ROHS COMPLIANT, DLC QUALIFIED. COMPLIES WITH IES LM79, LM80 AND TM21 TESTING STANDARDS.
6. MOUNTING - RECESSED IN HARD OR ACOUSTICAL TILE CEILING.
7. OPTIONS - EDGE-LIT LENS, PRISMATIC LENS. EMERGENCY BATTERY BACK-UP, INTEGRAL OCCUPANCY/VACANCY SENSOR, VARIOUS SIZE AND OUTPUT OPTIONS, SURFACE-MOUNTING KIT.

FLAT LENS LED LUMINAIRE

TYPE 'B'

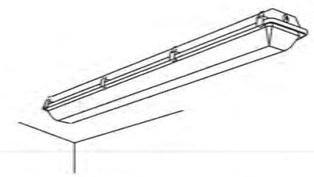

NOTE: THIS SKETCH IS A NON-PROPRIETARY GRAPHIC REPRESENTATION OF A LUMINAIRE THAT MAY MEET THE SPECIFICATION REQUIREMENTS. IT IS NOT INTENDED TO INDICATE A CERTAIN MANUFACTURER OR PREFERENCE.

LUMINAIRE REQUIREMENTS:

1. HOUSING - HIGH-IMPACT RESISTANT, FULLY GASKETED HOUSING CONSTRUCTED OF STAINLESS STEEL OR HEAVY-DUTY DIE CAST ALUMINUM. SIZE AS INDICATED IN LUMINAIRE SCHEDULE.
2. OPTICS - UV-STABILIZED, HIGH-IMPACT, FROSTED POLYCARBONATE OR GLASS LENS.
3. LIGHT SOURCE - SOLID STATE LEDS, 4000K CCT UON, MINIMUM 80 CRI UON, AND MINIMUM EFFICACY OF 90 LUMENS/WATT UON. INITIAL LUMEN OUTPUT AS INDICATED IN LUMINAIRE SCHEDULE.
4. DRIVER - REPLACEABLE, INTEGRAL, HIGH-EFFICIENCY DIMMABLE DRIVER WITH MINIMUM 0.9 PF, OPERATING VOLTAGE OF 120-277V, THERMAL MANAGEMENT, AND < 20% THD. ON/OFF CONTROL AND FULLY DIMMABLE DOWN TO 10% MINIMUM OR AS INDICATED IN LUMINAIRE SCHEDULE.
5. CERTIFICATION - UL LISTED FOR WET LOCATION, ROHS COMPLIANT. DLC QUALIFIED. COMPLIES WITH IES LM79, LM80 AND TM21 TESTING STANDARDS. MEETS UL844 REQUIREMENTS FOR CLASS 1 DIVISION 2 HAZARDOUS LOCATIONS.
6. MOUNTING - CEILING OR WALL SURFACE-MOUNTED.
7. OPTIONS - INTEGRAL OCCUPANCY SENSOR, EMERGENCY BATTERY BACK-UP.

LED HAZARDOUS LOCATION LIGHT

TYPE 'C'

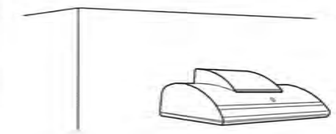

NOTE: THIS SKETCH IS A NON-PROPRIETARY GRAPHIC REPRESENTATION OF A LUMINAIRE THAT MAY MEET THE SPECIFICATION REQUIREMENTS. IT IS NOT INTENDED TO INDICATE A CERTAIN MANUFACTURER OR PREFERENCE.

LUMINAIRE REQUIREMENTS:

1. HOUSING - DIE-CAST OR EXTRUDED ALUMINUM WITH INTEGRAL PASSIVE COOLING MECHANISM. HEAT SINK INCORPORATED DIRECTLY INTO HOUSING OR DRIVER COMPARTMENT.
2. OPTICS - PRECISION MOLDED ACRYLIC LENS WITH TYPE II, III, OR IV DISTRIBUTIONS. BUG UPLIGHT RATING OF U0, WITH GLARE RATING AS DETERMINED BY LIGHTING ZONE INSTALLED.
3. LIGHT SOURCE - SOLID STATE LEDS, 4000K CCT UON, MINIMUM 70 CRI UON, AND MINIMUM EFFICACY OF 80 LUMENS/WATT UON. INITIAL LUMEN OUTPUT AS INDICATED IN LUMINAIRE SCHEDULE.
4. DRIVER - REPLACEABLE, INTEGRAL, HIGH-EFFICIENCY DIMMABLE DRIVER WITH MINIMUM 0.9 PF, OPERATING VOLTAGE OF 120-277V, THERMAL MANAGEMENT, AND < 20% THD. ON-OFF CONTROL AND FULLY DIMMABLE DOWN TO 10% MINIMUM OR AS INDICATED IN LUMINAIRE SCHEDULE.
5. CERTIFICATION - UL LISTED FOR WET LOCATION, ROHS COMPLIANT. COMPLIES WITH IES LM79, LM80 AND TM21 TESTING STANDARDS.
6. MOUNTING - SURFACE MOUNTED WITH STAINLESS STEEL MOUNTING HARDWARE.
7. OPTIONS - VARIOUS LIGHT DISTRIBUTIONS. INTEGRAL MOTION SENSOR, PHOTOCELL, BATTERY BACK-UP.

LED WALL PACK

TYPE 'WE'

NOTE: THIS SKETCH IS A NON-PROPRIETARY GRAPHIC REPRESENTATION OF A LUMINAIRE THAT MAY MEET THE SPECIFICATION REQUIREMENTS. IT IS NOT INTENDED TO INDICATE A CERTAIN MANUFACTURER OR PREFERENCE.

LUMINAIRE REQUIREMENTS:

1. HOUSING - EXTRUDED ALUMINUM WITH CLEAR ACRYLIC EDGE-LIT PANEL SUITABLE FOR HAZARDOUS LOCATIONS.
2. LIGHT SOURCE - SOLID STATE LEDS.
3. DRIVER - INTEGRAL, HIGH-EFFICIENCY DRIVER WITH MINIMUM 0.9 PF, OPERATING VOLTAGE OF 120-277V, THERMAL MANAGEMENT, AND < 20% THD.
4. CERTIFICATION - NFPA 101, UL LISTED FOR DAMP OR WET LOCATION, AND ROHS COMPLIANT.
5. MOUNTING - SURFACE MOUNTED ON CEILING AND/OR WALL.
6. OPTIONS - RED OR GREEN LETTERING, ONE- OR TWO-SIDED. BATTERY BACKUP.

EDGE LIT EXIT SIGN

TYPE 'X'

LUMINAIRE SCHEDULE

LUMINAIRE TYPE	LAMP TYPE	WATTS	LUMENS	LPW	VOLTAGE	MOUNTING	NOTES	DESCRIPTION
A	LED	76 W	11856	156	MVOLT	CEILING/ SURFACE		HIGH BAY LED, 4000K, 80CRI, W/ INTERGRATED OCCUPANCY SENSOR
AE	LED	76 W	11856	156	MVOLT	CEILING/ SURFACE		HIGH BAY LED, 4000K, 80CRI, W/ INTERGRATED OCCUPANCY SENSOR. PROVIDE W/ BATTERY BACKUP.
B	LED		2617	121	MVOLT	CEILING/ RECESSED		CPANL SWITCHABLE LUMEN LED FLAT PANEL 2X2 24/33/44LM 3500 K CCT - 24LM
BE	LED		2617	121	MVOLT	CEILING/ RECESSED		CPANL SWITCHABLE LUMEN LED FLAT PANEL 2X2 24/33/44LM 3500 K CCT - 24LM W/ BATTERY BACK-UP
C	LED	31 W	4000	129	MVOLT	CEILING/ SURFACE		LED STRIPLIGHT, 4000K, 80CRI
CE	LED	31 W	4000	129	MVOLT	CEILING/ SURFACE		LED STRIPLIGHT 4000K, 80CRI W/ BATTERY BACK-UP
UC	LED	9 W	627	56.5	MVOLT	UNDERCABINET		LOW□PROFILE LED UNDERCABINET LIGHT, 3500K
WE	LED	28 W	3100	108	MVOLT	WALL		WALLPACK FULL CUTOFF LED TYPE III , 3500K W/ BATTERY BACK-UP W/ INTEGRATED PHOTOCELL
X	LED	5 W	N/A	N/A	MVOLT	WALL		WALL MOUNTED EXIT SIGN W/ SELF TEST AND INTEGRAL BATTERY

LIGHTING CONTROL STRATEGY

CONTROL STRATEGY NAME	CONTROL STRATEGY DESCRIPTION	TREATMENT BLDG.	OFFICE BLDG.
MANUAL ON/MANUAL OFF	OCCUPANT MANUALLY TURNS LIGHTS ON UPON ENTERING THE SPACE AND OCCUPANT MANUALLY TURNS LIGHTS OFF WHEN EXITING. THIS APPROACH CAN ONLY BE IMPLEMENTED DUE TO OPERATIONAL REQUIREMENTS.	LOCKERS - 102 SHOWER - 104 MECHANICAL - 111 ELECTRICAL ROOM - 106	ELEC/MECH - 108 CLOSET - 105
MANUAL ON/VACANCY TO 50% OFF	OCCUPANT MANUALLY TURNS LIGHTS ON UPON ENTERING THE SPACE AND UPON SENSING VACANCY, SWITCH OR DIM LUMINARIES TO 50% OF FULL LIGHT OUTPUT.	EQUIPMENT AREA - 100 EXTERIOR LIGHTING BLOWER ROOM - 108 AOP REACTORS ROOM - 109 OZONE GENERATOR - 110 HYDROGEN PEROX. ROOM - 112 CAUSTIC RM. - 113 SODIUM HYPO. RM. - 114	EXTERIOR LIGHTING
OCCUPANCY ON/VACANCY OFF	OCCUPANT ENTERS THE SPACE AND LIGHTS AUTOMATICALLY TURN ON TO 100%. UPON SENSING VACANCY, THE LIGHTS TURN OFF.	RR - 101 TOILET - 103 JAN - 105 CONTROL ROOM - 107	OPEN OFFICE - 101 BREAK - 102 RESTROOM - 103 CONFERNECE - 106 STORAGE - 107

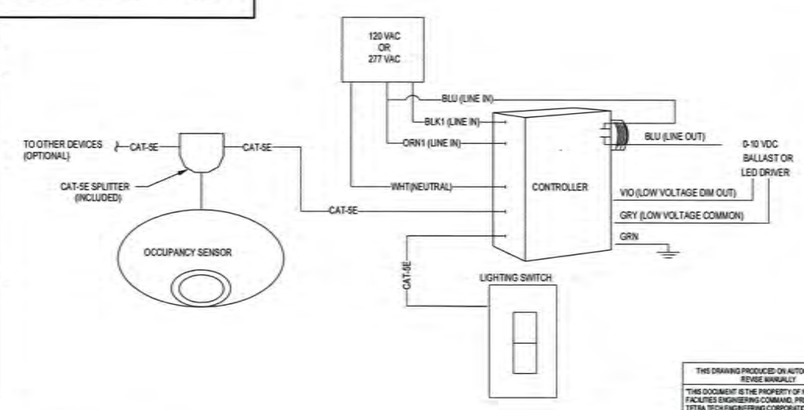

A3 OCCUPANCY LIGHTING AND INTERIOR CONTROL DIAGRAM

NOT TO SCALE

ISSUED FOR BID FEBRUARY 2026

CAUTION:IF SHEET IS LESS THAN 34"x22" USE GRAPHIC SCALE

THIS DRAWING PRODUCED ON AUTOCAD DO NOT REVISE MANUALLY

"THIS DOCUMENT IS THE PROPERTY OF NAVAL FACILITIES ENGINEERING COMMAND, PREPARED BY TETRA TECH ENGINEERING CORPORATION PC, AND IS PROVIDED UPON THE CONDITION THAT IT WILL NOT BE REPRODUCED, COPIED, OR ISSUED TO A THIRD PARTY, AND WILL BE USED SOLELY FOR THE ORIGINAL INTENDED PURPOSE AND SOLELY FOR THE EXECUTION OR REVIEW OF THE ENGINEERING CONSTRUCTION OF THE PROJECT."

IT IS A VIOLATION OF THE NEW YORK STATE EDUCATION LAW, ARTICLE 145, FOR ANY PERSON, UNLESS UNDER THE DIRECTION OF A NEW YORK STATE LICENSED PROFESSIONAL ENGINEER, TO ALTER AN ITEM ON THIS DOCUMENT IN ANY WAY.

SYM	DESCRIPTION	DATE	APPR.

NAVFAC

STATE OF NEW YORK · JOSEPH K. HOOVER · LICENSED PROFESSIONAL ENGINEER

TETRA TECH
www.tetratech.com
4433 CORPORATION LANE, SUITE 300
VIRGINIA BEACH, VA 23462
PHONE: (757) 481-3768 FAX: (757) 481-4148

APPROVED
FOR COMMANDER NAVFAC
ACTIVITY
As per document from Nicole Coward, NAVFAC MIDLANT PLL/EV3
SATISFACTORY TO DATE 4/24/2026
DES. JKH | RLH | DRW RLH | CHK JKH
PM/CM:
BRANCH MANAGER
CHIEF ENGIARCH
FIRE PROTECTION

DEPARTMENT OF THE NAVY
NAVAL FACILITIES ENGINEERING SYSTEMS COMMAND – MID-ATLANTIC
NAVAL FACILITIES ENGINEERING SYSTEMS COMMAND
NAVAL STATION NORFOLK, VA
NAVAL WEAPONS INDUSTRIAL RESERVE PLANT
BETHPAGE, NEW YORK
PHASE III - GROUNDWATER TREATMENT PLANT
ELECTRICAL DETAILS

SCALE: AS NOTED
PROJECT NO.:
CONSTR. CONTR. NO.
NAVFAC DRAWING NO.
SHEET E-501 OF

DRAWFORM REVISION: 28 AUGUST 2020

4/20/2026 11:54:12 AM
Autodesk Docs://1120080005-WEIA Navy- Bethpage NY-Phase III /E-1120080005_PHASEIII_GWTP_v2023.rvt
E-501

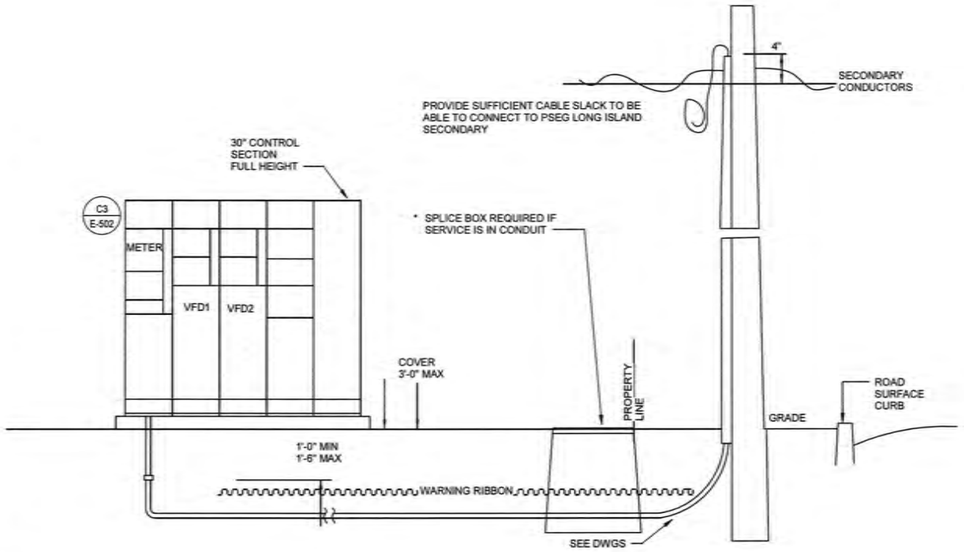

C1 WELL SITE SERVICE CONNECTION FROM OVERHEAD DISTRIBUTION

NOT TO SCALE

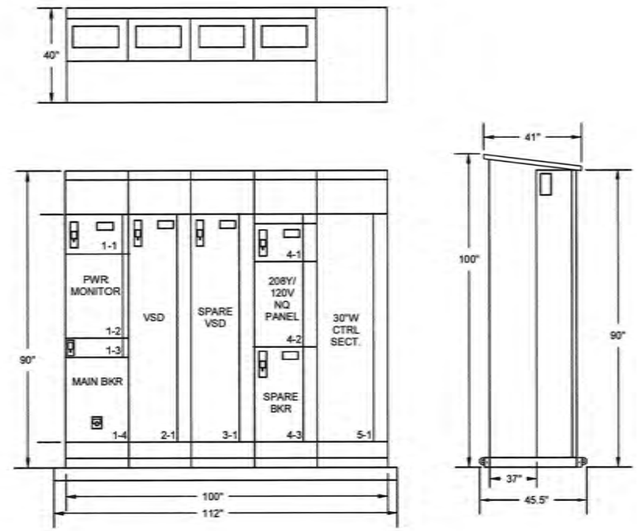

C3 WELL SITE MCC ELEVATION AND PLAN VIEW

NOT TO SCALE

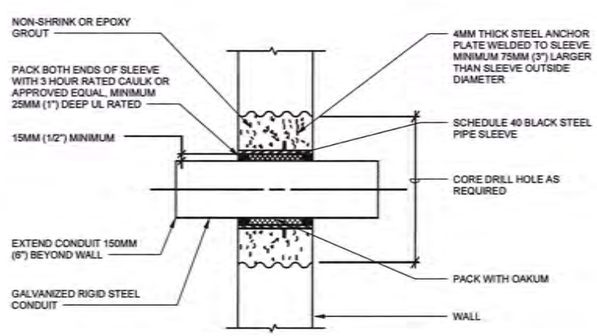

A1 TYPICAL WALL PENETRATION DETAIL

NOT TO SCALE

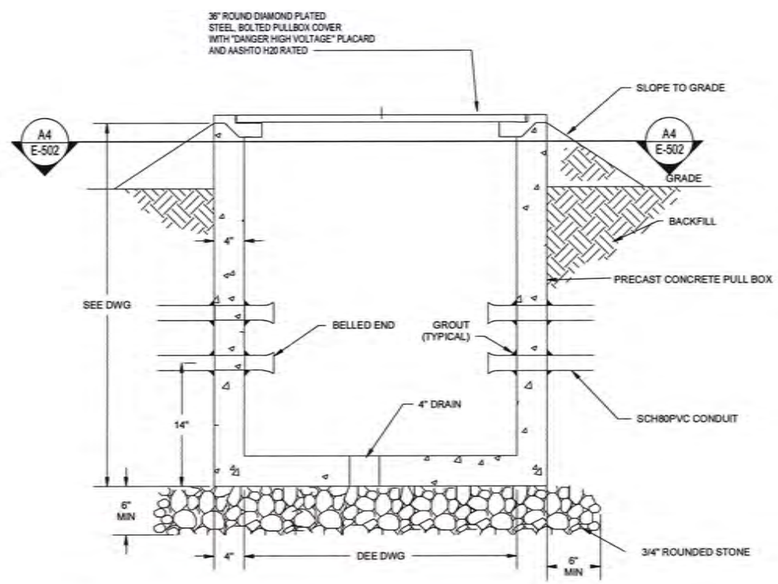

A2 CONCRETE PULL BOX SECTION DETAIL

NOT TO SCALE

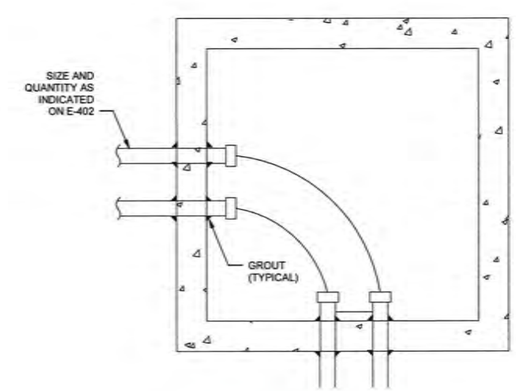

A4 PULL BOX PLAN DETAIL

NOT TO SCALE

ISSUED FOR BID FEBRUARY 2026

CAUTION:IF SHEET IS LESS THAN 34"x22" USE GRAPHIC SCALE

THIS DRAWING PRODUCED ON AUTOCAD DO NOT REVISE MANUALLY

"THIS DOCUMENT IS THE PROPERTY OF NAVAL FACILITIES ENGINEERING COMMAND, PREPARED BY TETRA TECH ENGINEERING CORPORATION PC, AND IS PROVIDED UPON THE CONDITION THAT IT WILL NOT BE REPRODUCED, COPIED, OR ISSUED TO A THIRD PARTY, AND WILL BE USED SOLELY FOR THE ORIGINAL INTENDED PURPOSE AND SOLELY FOR THE EXECUTION OR REVIEW OF THE ENGINEERING CONSTRUCTION OF THE PROJECT".

IT IS A VIOLATION OF THE NEW YORK STATE EDUCATION LAW, ARTICLE 145, FOR ANY PERSON, UNLESS UNDER THE DIRECTION OF A NEW YORK STATE LICENSED PROFESSIONAL ENGINEER, TO ALTER AN ITEM ON THIS DOCUMENT IN ANY WAY.

SYM	DESCRIPTION	DATE	APPR

NAVFAC

STATE OF NEW YORK · JOSEPH K. HOOVER · LICENSED PROFESSIONAL ENGINEER

TETRA TECH
www.tetratech.com
4403 CORPORATION LANE, SUITE 300
VIRGINIA BEACH, VA 23462
PHONE: (757) 461-3768 FAX: (757) 461-4148
#E-INFO

APPROVED
FOR COMMANDER NAVFAC 4/24/2026

ACTIVITY
As per document from Nicole Coward, NAVFAC MIDLANT PLL/EV3

SATISFACTORY TO DATE 4/24/2026

DES JKH/RLH | DRW RLH | CHK JKH

PM/CM
BRANCH MANAGER
CHIEF ENGINEER
FIRE PROTECTION

DEPARTMENT OF THE NAVY
NAVAL FACILITIES ENGINEERING SYSTEMS COMMAND – MID-ATLANTIC
NAVAL STATION - NORFOLK, VA
NAVAL FACILITIES ENGINEERING SYSTEMS COMMAND
NAVAL WEAPONS INDUSTRIAL RESERVE PLANT
BETHPAGE, NEW YORK

PHASE III - GROUNDWATER TREATMENT PLANT

ELECTRICAL DETAILS

SCALE: AS NOTED
EPROJECT NO.:
CONSTR. CONTR. NO.
NAVFAC DRAWING NO.
SHEET OF
E-502

DRAWFORM REVISION: 25 AUGUST 2020

4/20/2026 11:54:13 AM E-502
Autodesk Docs://1120080005-VRC24 Navy Bethpage NY-Phase III-E-1120080005_PHASEIII_GWTP_v0023.rvt

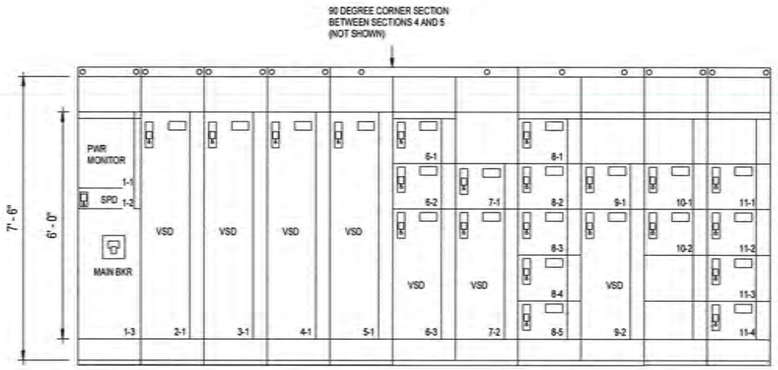

C1 MAIN MOTOR CONTROL CENTER (MCC) ELEVATION

NOT TO SCALE

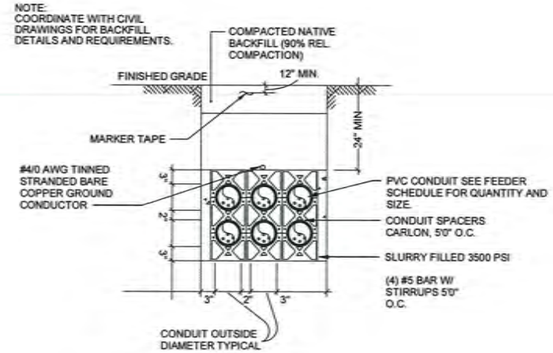

C3 6-WAY SERVICE DUCT BANK

NOT TO SCALE

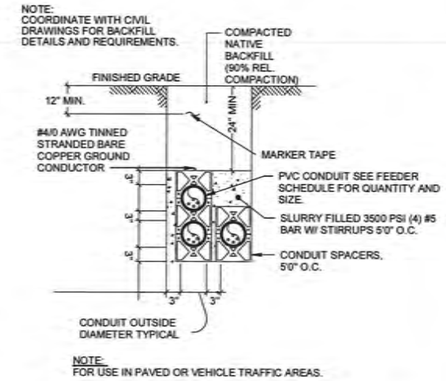

NOTE:
FOR USE IN PAVED OR VEHICLE TRAFFIC AREAS.

C4 3-WAY ENCASED DUCT BANK

NOT TO SCALE

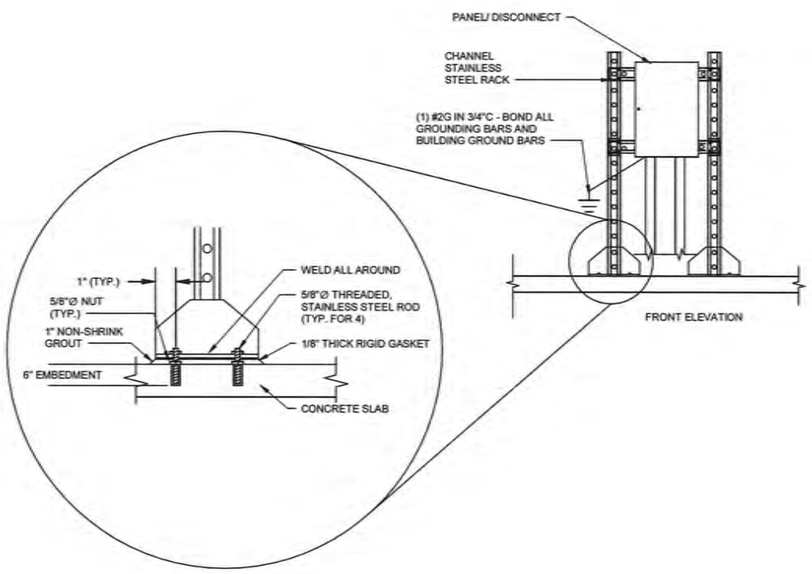

A1 TYPICAL CHANNEL STEEL

NOT TO SCALE

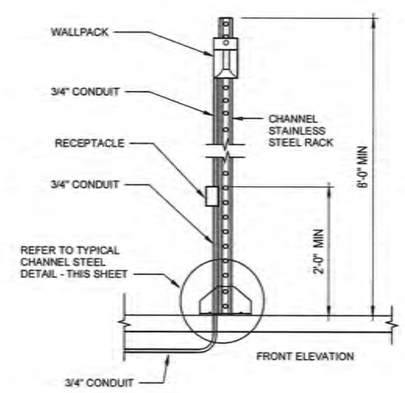

A3 WELL SITE LIGHT AND RECEPTACLE DETAIL

NOT TO SCALE

ISSUED FOR BID FEBRUARY 2026

CAUTION IF SHEET IS LESS THAN 34"x22" USE GRAPHIC SCALE

THIS DRAWING PRODUCED ON AUTOCAD DO NOT REVISE MANUALLY

"THIS DOCUMENT IS THE PROPERTY OF NAVAL FACILITIES ENGINEERING COMMAND, PREPARED BY TETRA TECH ENGINEERING CORPORATION PC, AND IS PROVIDED UPON THE CONDITION THAT IT WILL NOT BE REPRODUCED, COPIED, OR ISSUED TO A THIRD PARTY, AND WILL BE USED SOLELY FOR THE ORIGINAL INTENDED PURPOSE AND SOLELY FOR THE EXECUTION OR REVIEW OF THE ENGINEERING CONSTRUCTION OF THE PROJECT."

IT IS A VIOLATION OF THE NEW YORK STATE EDUCATION LAW, ARTICLE 145, FOR ANY PERSON, UNLESS UNDER THE DIRECTION OF A NEW YORK STATE LICENSED PROFESSIONAL ENGINEER, TO ALTER AN ITEM ON THIS DOCUMENT IN ANY WAY.

SYM	DESCRIPTION	DATE	APPR.

NAVFAC

STATE OF NEW YORK · JOSEPH K. HOOVER · LICENSED PROFESSIONAL ENGINEER · SEAL

TETRA TECH
www.tetratech.com
4433 CORPORATION LANE, SUITE 300
VIRGINIA BEACH, VA 23462
PHONE: (757) 461-2768 FAX: (757) 461-4148
AE INFO

APPROVED
FOR COMMANDER NAVFAC
ACTIVITY
As per document from Nicole Coward, NAVFAC MIDLANT PLL/EV3
SATISFACTORY TO DATE 4/24/2026
DES. JKH/RLH DRW Author CHK. JKH
PM/CM
BRANCH MANAGER
CHIEF ENGIARCH
FIRE PROTECTION

DEPARTMENT OF THE NAVY
NAVAL FACILITIES ENGINEERING SYSTEMS COMMAND
NAVAL FACILITIES ENGINEERING SYSTEMS COMMAND – MID-ATLANTIC
NAVAL STATION - NORFOLK, VA
NAVAL WEAPONS INDUSTRIAL RESERVE PLANT
BETHPAGE, NEW YORK
PHASE III - GROUNDWATER TREATMENT PLANT
ELECTRICAL DETAILS

SCALE: AS NOTED
EPROJECT NO.:
CONSTR. CONTR. NO.
NAVFAC DRAWING NO.
SHEET OF
E-503

DRAWFORM REVISION: 28 AUGUST 2020

4/20/2026 11:54:14 AM E-503
Autodesk Docs://1120080005/WEIA Navy- Bethpage NY-Phase III /E-1120080005_PHASEIII_GWTP_v2023.rvt

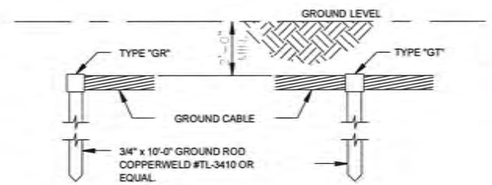

WELD CONNECTORS		
CABLE SIZE	TYPE	WELD METAL
500	GR	#150
4/0	GR	#90
1/0	GR	#90
500	GT	#250
4/0	GT	#115
1/0	GT	#115

C2 BURIED GROUND ROD - WELDED DETAIL

NOT TO SCALE

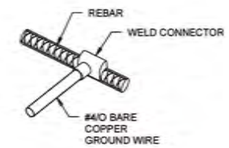

D3 CABLE TO REBAR CONNECTION DETAIL

NOT TO SCALE

GENERAL GROUNDING NOTES:

1. A COMPLETE GROUND SYSTEM MUST BE INSTALLED IN STRICT COMPLIANCE WITH ARTICLE 250 OF THE NATIONAL ELECTRIC CODE AND THE FOLLOWING. THE CONTRACTOR IS RESPONSIBLE FOR MEETING ALL GROUNDING REQUIREMENTS, WHETHER OR NOT THEY ARE SPECIFICALLY INDICATED ON THE DRAWINGS.
2. GROUNDING ELECTRODE CONDUCTORS EMPLOYED WILL CONSIST OF A SOFT DRAWN BARE COPPER STRANDED CONDUCTOR.
3. SIZE OF THE GROUNDING ELECTRODE CONDUCTOR EMPLOYED WILL BE REGULATEDBY THE FOLLOWING:

   #4/0 - UNDERGROUND LOOP UNLESS NOTED OTHERWISE.
4. ALL GROUND CABLE TO BE A MINIMUM OF 2'-6" BELOW FINISHED GRADE AND COVERED WITH A NON-CORROSIVE FILL.
5. GROUND BED RESISTANCE TO EARTH MUST BE TESTED UNDER DRY SOIL CONDITIONS. ADDITIONAL GROUND RODS MUST BE INSTALLED AS REQUIRED TO ACHIEVE THE MAXIMUM RESISTANCE OF 3 OHMS OR LESS TESTING SHALL BE BY THE THREE-POINT FALL OF POTENTIAL METHOD USING A BIDDLE "MEGGER" EARTH RESISTANCE TESTER (OR EQUIVALENT) IN ACCORDANCE WITH MANUFACTURER'S INSTRUCTIONS.
6. SURFACES WHERE GROUNDING CONNECTIONS ARE TO BE MADE MUST BE CLEAN AND DRY.
7. STEEL SURFACES MUST BE GROUND OR FILED TO REMOVE ALL SCALE, RUST AND DIRT.
8. COPPER AND GALVANIZED STEEL MUST BE CLEANED WITH EMERY CLOTH TO REMOVE OXIDE BEFORE MAKING JUNCTIONS.
9. THE COMPLETE CONDUIT/TRAY SYSTEM, INCLUDING JUNCTION BOXES AND PULL BOXES WILL FORM A CONTINUOUS CONDUCTIVE PATH TO GROUND.
10. METAL GAS PIPING BE BONDED IN ACCORDANCE WITH NFPA70 250.104(B).

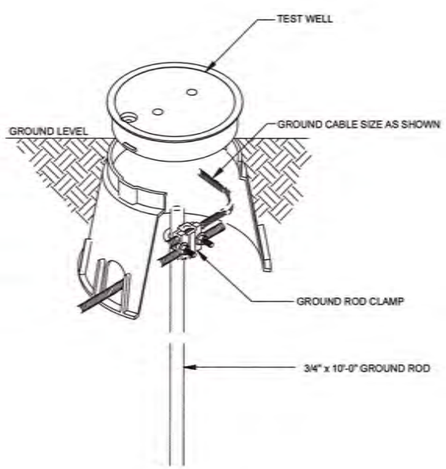

A1 GROUNDING ROD - IN WELL DETAIL

NOT TO SCALE

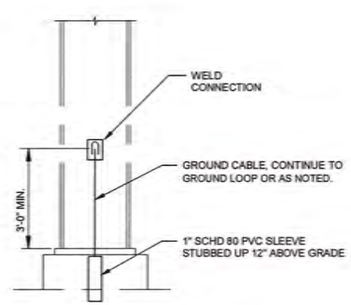

A2 STRUCTURAL - WELDED DETAIL

NOT TO SCALE

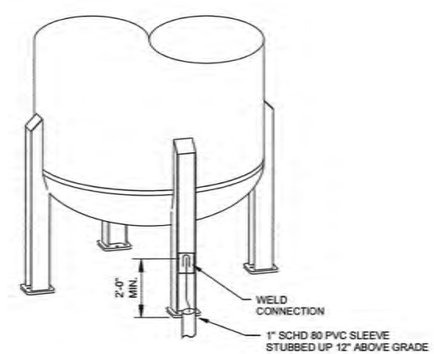

A3 TANK - WELDED DETAIL

NOT TO SCALE

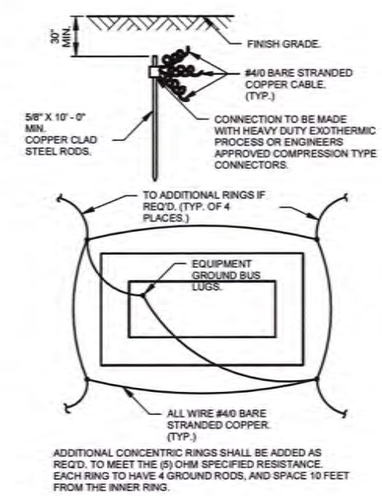

ADDITIONAL CONCENTRIC RINGS SHALL BE ADDED AS REQ'D. TO MEET THE (5) OHM SPECIFIED RESISTANCE. EACH RING TO HAVE 4 GROUND RODS, AND SPACE 10 FEET FROM THE INNER RING.

A4 GROUND MAT DETAIL

NOT TO SCALE

ISSUED FOR BID FEBRUARY 2026

CAUTION:IF SHEET IS LESS THAN 34"x22" USE GRAPHIC SCALE

THIS DRAWING PRODUCED ON AUTOCAD DO NOT REVISE MANUALLY

"THIS DOCUMENT IS THE PROPERTY OF NAVAL FACILITIES ENGINEERING COMMAND, PREPARED BY TETRA TECH ENGINEERING CORPORATION PC, AND IS PROVIDED UPON THE CONDITION THAT IT WILL NOT BE REPRODUCED, COPIED, OR ISSUED TO A THIRD PARTY, AND WILL BE USED SOLELY FOR THE ORIGINAL INTENDED PURPOSE AND SOLELY FOR THE EXECUTION OR REVIEW OF THE ENGINEERING CONSTRUCTION OF THE PROJECT."

IT IS A VIOLATION OF THE NEW YORK STATE EDUCATION LAW, ARTICLE 145, FOR ANY PERSON, UNLESS UNDER THE DIRECTION OF A NEW YORK STATE LICENSED PROFESSIONAL ENGINEER, TO ALTER AN ITEM ON THIS DOCUMENT IN ANY WAY.

SYM	DESCRIPTION	DATE	APPR

NAVFAC

STATE OF NEW YORK · JOSEPH K. HOOVER · LICENSED PROFESSIONAL ENGINEER · SEAL

TETRA TECH
www.tetratech.com
4433 CORPORATION LANE, SUITE 300
VIRGINIA BEACH, VA 23462
PHONE: (757) 461-3768 FAX: (757) 461-4148
AE INFO

APPROVED
FOR COMMANDER NAVFAC

ACTIVITY
As per document from Nicole Coward, NAVFAC MIDLANT PLL/EV3
SATISFACTORY TO DATE 4/24/2026
DES JKH/RLH DRW RLH CHK JKH
PM/CM:
BRANCH MANAGER:
CHIEF ENGIARCH
FIRE PROTECTION

DEPARTMENT OF THE NAVY
NAVAL FACILITIES ENGINEERING SYSTEMS COMMAND
NAVAL FACILITIES ENGINEERING SYSTEMS COMMAND ~ MID-ATLANTIC
NAVAL STATION - NORFOLK, VA
NAVAL WEAPONS INDUSTRIAL RESERVE PLANT
BETHPAGE, NEW YORK
PHASE III - GROUNDWATER TREATMENT PLANT
ELECTRICAL DETAILS

SCALE: AS NOTED
EPROJECT NO.:
CONSTR. CONTR. NO.
NAVFAC DRAWING NO.
SHEET OF
E-504

DRAWFORM REVISION: 25 AUGUST 2020

4/20/2026 11:54:15 AM E-504
Autodesk Docs://1230080005-WG24 Navy- Bethpage NY-Phase III IE-1230080005_PHASEIII_GWTP_v2023.rvt

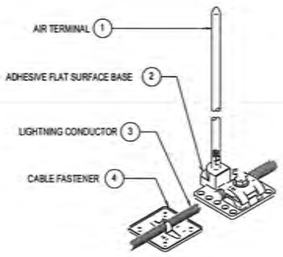

C1 ADHESIVE AIR TERMINAL DETAIL
NOT TO SCALE

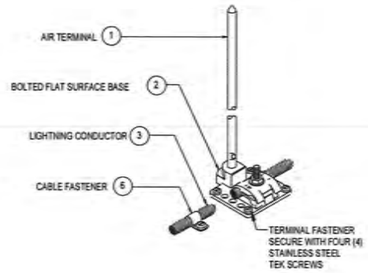

C2 BOLTED AIR TERMINAL DETAIL
NOT TO SCALE

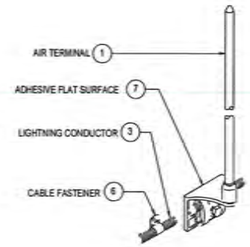

C3 OFFSET PARAPET AIR TERMINAL DETAIL
NOT TO SCALE

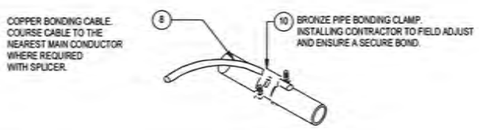

B1 PIPE BONDING CLAMP
NOT TO SCALE

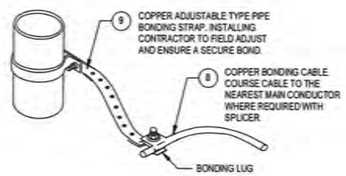

B2 ROOF PIPE BOND
NOT TO SCALE

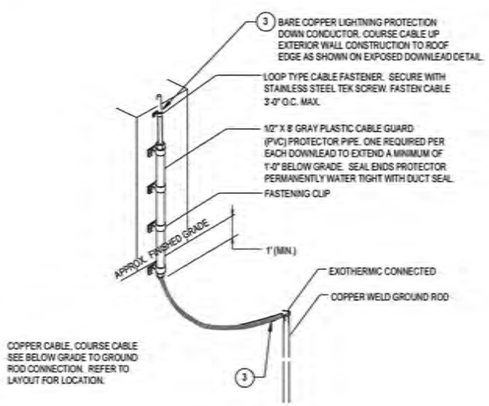

A1 EXPOSED DOWNLEAD TO GROUNDING CONNECTIONS
NOT TO SCALE

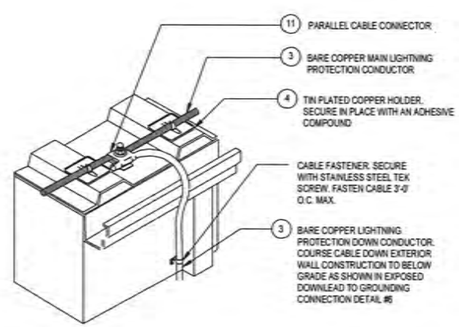

A2 EXPOSED DOWNLEAD TO ROOF EDGE
NOT TO SCALE

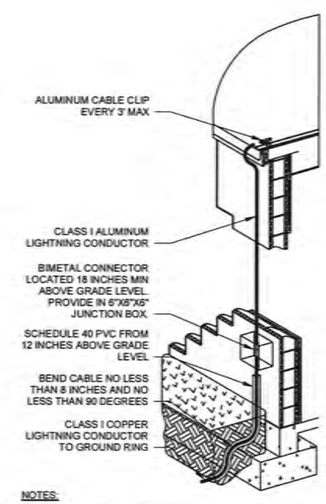

NOTES:

1. ANY MATERIAL THAT COMES IN CONTACT WITH THE ROOF (DEVICES, ADHESIVES, ETC.) MUST BE APPROVED BY THE ROOFING INTEGRITY AND WARRANTY. LIGHTNING PROTECTION SUBCONTRACTOR TO PROVIDE DOCUMENTATION OF ROOFING SUBCONTRACTOR'S ACCEPTANCE OF REQUIRED DEVICES.

A4 LPS DOWN CONDUCTOR DETAIL
NOT TO SCALE

BILL OF MATERIALS

1. 12" LONG, 1/2" DIA. CLASS II TIN PLATED COPPER AIR TERMINAL.
2. UNIVERSAL MOUNTING BASE. TIN PLATED BRONZE, 1/2" THREADED HUB FOR AIR TERMINAL
3. CLASS II BARE COPPER MAIN LIGHTNING PROTECTION CONDUCTOR APPROX. DIA. 1/2"
4. TIN PLATED COPPER ADHESIVE CABLE HOLDER (NEAR AIR TERMINAL).
5. TIN PLATED COPPER ADHESIVE CABLE HOLDER FOR HOLDING CABLE BETWEEN AIR TERMINALS
6. TINNED COPPER CABLE CLIP
7. OFFSET PARAPET BASE. TIN PLATED BRONZE WITH AIR TERMINAL ADAPTER BASE
8. COPPER BONDING CONDUCTOR
9. COPPER ADJUSTABLE TYPE PIPE BONDING STRAP WITH BONDING LUG
10. BRONZE PIPE BONDING CLAMP
11. PARALLEL CABLE CONNECTOR (SPLICE) TIN PLATED COPPER

ISSUED FOR BID FEBRUARY 2026

CAUTION:IF SHEET IS LESS THAN 34"x22" USE GRAPHIC SCALE

THIS DRAWING PRODUCED ON AUTOCAD DO NOT REVISE MANUALLY

"THIS DOCUMENT IS THE PROPERTY OF NAVAL FACILITIES ENGINEERING COMMAND, PREPARED BY TETRA TECH ENGINEERING CORPORATION PC, AND IS PROVIDED UPON THE CONDITION THAT IT WILL NOT BE REPRODUCED, COPIED, OR ISSUED TO A THIRD PARTY, AND WILL BE USED SOLELY FOR THE ORIGINAL INTENDED PURPOSE AND SOLELY FOR THE EXECUTION OR REVIEW OF THE ENGINEERING CONSTRUCTION OF THE PROJECT".

IT IS A VIOLATION OF THE NEW YORK STATE EDUCATION LAW, ARTICLE 145, FOR ANY PERSON, UNLESS UNDER THE DIRECTION OF A NEW YORK STATE LICENSED PROFESSIONAL ENGINEER, TO ALTER AN ITEM ON THIS DOCUMENT IN ANY WAY.

SYM.	DESCRIPTION	DATE	APPR.

NAVFAC

STATE OF NEW YORK · JOSEPH K. HUGHES · LICENSED PROFESSIONAL ENGINEER

TETRA TECH
www.tetratech.com
4433 CORPORATION LANE, SUITE 300
VIRGINIA BEACH, VA 23462
PHONE: (757) 461-3768 FAX: (757) 461-4148

APPROVED
FOR COMMANDER NAVFAC
ACTIVITY
As per document from Nicole Coward, NAVFAC MIDLANT PL/EV3
SATISFACTORY TO DATE 4/24/2026
DES. JKH/RLH DRW RLH CHK JKH
PM/DM
BRANCH MANAGER
CHIEF ENGARCH
FIRE PROTECTION

DEPARTMENT OF THE NAVY
NAVAL FACILITIES ENGINEERING SYSTEMS COMMAND
NAVAL FACILITIES ENGINEERING SYSTEMS COMMAND – MID-ATLANTIC
NAVAL STATION - NORFOLK, VA
NAVAL WEAPONS INDUSTRIAL RESERVE PLANT
BETHPAGE, NEW YORK
PHASE III - GROUNDWATER TREATMENT PLANT
ELECTRICAL DETAILS

SCALE: AS NOTED
EPROJECT NO.:
CONSTR. CONTR. NO.
NAVFAC DRAWING NO.
SHEET OF
E-505

DRAWFORM REVISION: 26 AUGUST 2025

4/20/2026 11:54:15 AM E-505
Autodesk Docs://1120386005-VEC4 Navy- Bethpage NY-Phase III IE-1120386005_PHASEIII_GWTP_v2023.rvt

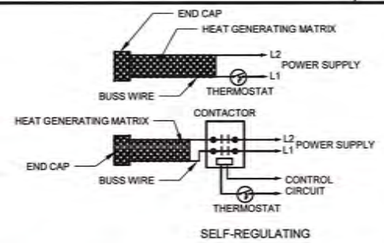

D1 TYPICAL HEATER CIRCUIT WIRING DIAGRAM

NOT TO SCALE

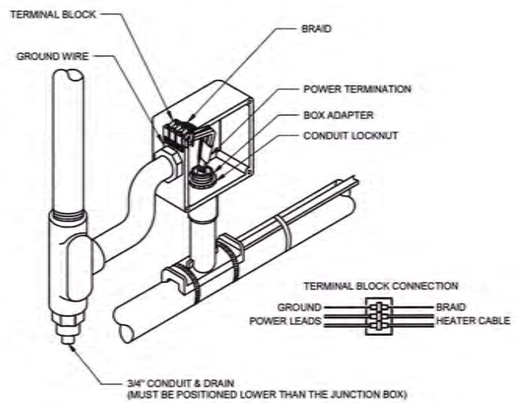

C1 POWER CONNECTION BOX BRAIDED CABLE

NOT TO SCALE

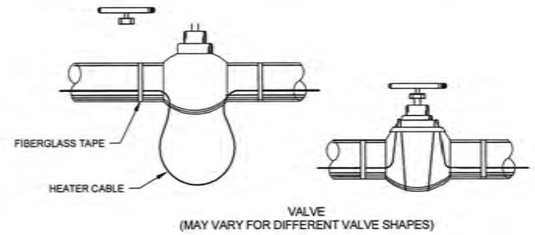

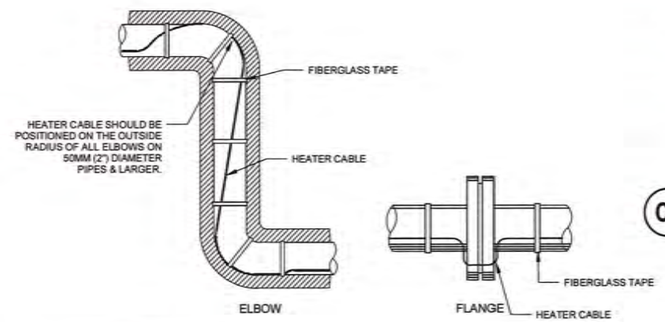

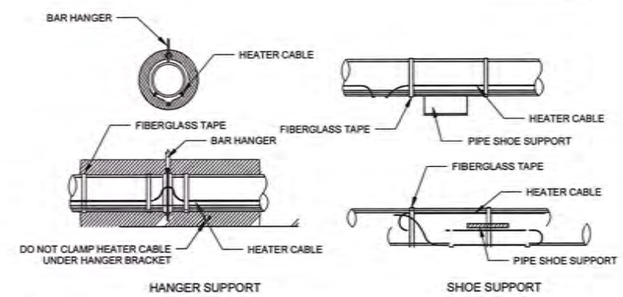

B2 TYPICAL HEATER CABLE INSTALLATION

NOT TO SCALE

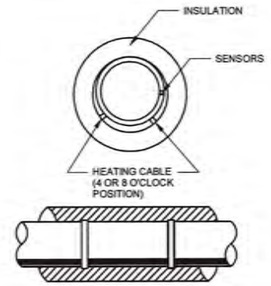

STRAIGHT TRACING NOTES:

1. WHEN STRAIGHT TRACING IS USED, INSTALL THE HEATER CABLE ON THE LOWER QUADRANT OF THE PIPE. THIS HELPS PREVENT PHYSICAL DAMAGE TO THE HEATER CABLE FROM FALLING OBJECTS AND BEING WALKED ON.
2. ALTERNATIVE LOCATION IS THE 2 AND 10 O'CLOCK POSITION
3. SECURE PIPE AT 12" INTERVALS WITH FIBERGLASS TAPE.

C3 HEATER CABLE WRAP

NOT TO SCALE

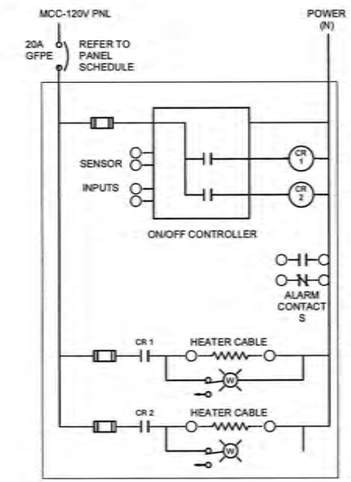

C4 SCHEMATIC DIAGRAM FOR HEAT TRACE PANEL

NOT TO SCALE

NOTES:

1. PLACE LABEL EVERY TEN (10) FEET.

B1 HEAT TRACED PIPE LABEL

NOT TO SCALE

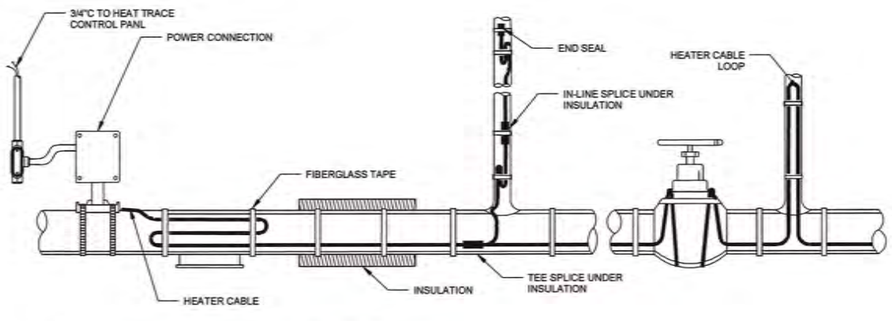

A1 TYPICAL INSTALLATION OVERVIEW

NOT TO SCALE

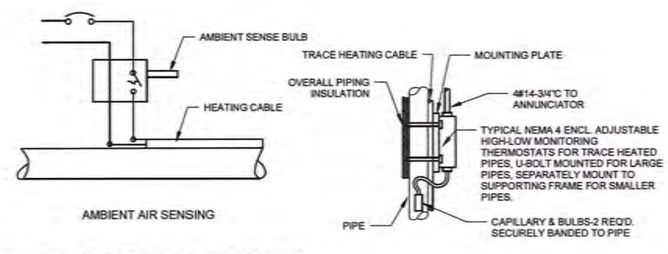

A2 SENSOR PLACEMENT

NOT TO SCALE

ISSUED FOR BID FEBRUARY 2026

CAUTION:IF SHEET IS LESS THAN 34"x22" USE GRAPHIC SCALE

THIS DRAWING PRODUCED ON AUTOCAD DO NOT REVISE MANUALLY

"THIS DOCUMENT IS THE PROPERTY OF NAVAL FACILITIES ENGINEERING COMMAND, PREPARED BY TETRA TECH ENGINEERING CORPORATION PC, AND IS PROVIDED UPON THE CONDITION THAT IT WILL NOT BE REPRODUCED, COPIED, OR ISSUED TO A THIRD PARTY, AND WILL BE USED SOLELY FOR THE ORIGINAL INTENDED PURPOSE AND SOLELY FOR THE EXECUTION OR REVIEW OF THE ENGINEERING CONSTRUCTION OF THE PROJECT".

IT IS A VIOLATION OF THE NEW YORK STATE EDUCATION LAW, ARTICLE 145, FOR ANY PERSON, UNLESS UNDER THE DIRECTION OF A NEW YORK STATE LICENSED PROFESSIONAL ENGINEER, TO ALTER AN ITEM ON THIS DOCUMENT IN ANY WAY.

SYM	DESCRIPTION	DATE	APPR

NAVFAC

STATE OF NEW YORK · JOSEPH K. HOOVER · LICENSED PROFESSIONAL ENGINEER

TETRA TECH
www.tetratech.com
4403 CORPORATION LANE, SUITE 300
VIRGINIA BEACH, VA 23462
PHONE: (757) 461-3768 FAX: (757) 461-4148
AE INFO

APPROVED

FOR COMMANDER NAVFAC

ACTIVITY

As per document from Nicole Coward, NAVFAC MIDLANT FLL/EV3

SATISFACTORY TO DATE 4/24/2026

DES JKH/RLH DRW RLH CHK JKH

PM/CM

BRANCH MANAGER

CHIEF ENGINEER

FIRE PROTECTION

DEPARTMENT OF THE NAVY
NAVAL FACILITIES ENGINEERING SYSTEMS COMMAND
NAVAL FACILITIES ENGINEERING SYSTEMS COMMAND – MID-ATLANTIC
NAVAL STATION - NORFOLK, VA
NAVAL WEAPONS INDUSTRIAL RESERVE PLANT
BETHPAGE, NEW YORK

PHASE III - GROUNDWATER TREATMENT PLANT

ELECTRICAL DETAILS

SCALE: AS NOTED

SPROJECT NO.:

CONSTR. CONTR. NO.

NAVFAC DRAWING NO.

SHEET OF

E-506

DRAWFORM REVISION: 25 AUGUST 2020

4/20/2026 11:54:17 AM E-506
Autodesk Docs://1230/0005-VB24 Navy Bethpage NY-Phase III IE-1230/0005_PHASEIII_GWTP_v2023.rvt

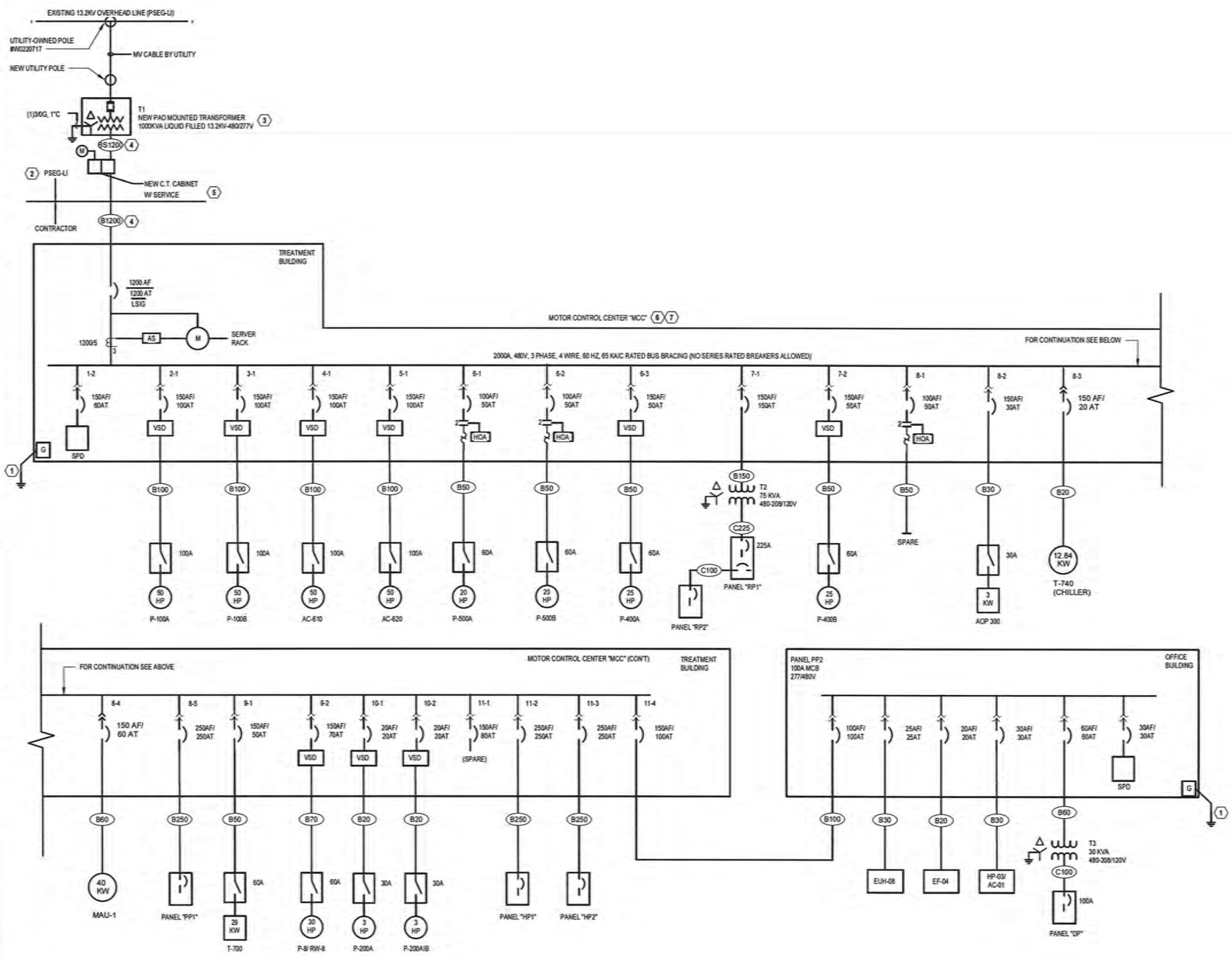

KEY NOTES:

1. PROVIDE 1" C WITH #3/0 G. PER NEC 250.
2. CONTRACTOR TO COORDINATE WITH UTILITY FOR FINAL CONNECTION WITH PAD MOUNTED TRANSFORMER.
3. FINAL TYPE AND SIZE OF 15KV UNDERGROUND CABLE/OVERHEAD CABLE LINE FUSES SHALL BE DETERMINED BY THE UTILITY COMPANY. COORDINATE ALL ASSOCIATED MATERIALS & WORK. PROVIDE UNDERGROUND CONCRETE ENCASED SCH. 40 PVC CONDUIT AS REQUIRED WITH (1) 4" CONDUIT SPARE.
4. PROVIDE (6) 4" DIA. SCHEDULE 40 PVC UNDERGROUND CONCRETE ENCASED CONDUITS. PROVIDE 4 SETS OF 4"C PLUS (2) 4"C SPARE.
5. UTILITY IS RESPONSIBLE FOR THE METER AND CT. CONTRACTOR TO PROVIDE THE TRANSFORMER PAD, THE CT CABINET AND COORDINATE WIRING WITH UTILITY FOR METER AND CT INSTALLATION.
6. ACTUAL FAULT CURRENT VALUES SHALL BE CALCULATED BY THE CONTRACTOR TO DETERMINE SHORT CIRCUIT CURRENT WITHSTANDING RATINGS IN SHOP DRAWING. SHORT CIRCUIT CALCULATION SHALL BE BASED ON ACTUAL LENGTHS OF FEEDERS, BRANCHES, SIZES, TYPES OF CABLES AND TYPES OF CONDUITS(MAGNETIC OR NON-MAGNETIC).
7. PROVIDE VSD WITH 3% LOAD AND LINE SIDE REACTORS

CABLE SCHEDULE

LABEL	CB RATING	# OF SETS	CURRENT CARRYING CONDUCTORS		GROUNDING CONDUCTORS		CONDUIT
			#	SIZE	#	SIZE	
B20	20 A	1	3	#12	1	#12	3/4"
B30	30 A	1	3	#10	1	#10	3/4"
B50	50 A	1	3	#6	1	#10	1"
B60	60 A	1	3	#4	1	#10	1-1/4"
B70	70 A	1	3	#4	1	#8	1-1/4"
B100	100 A	1	3	#1	1	#8	1-1/2"
B150	150 A	1	3	#1/0	1	#6	2"
B250	250 A	1	3	250KCMIL	1	#4	2-1/2"
B1200	1200 A	4	3	350KCMIL	1	#4/0	4"
BS1200	1200 A	4	3	350KCMIL	0	N/A	4"
C100	100 A	1	4	#1	1	#8	2"
C225	225 A	1	4	#4/0	1	#4	2-1/2"

A1 SINGLE LINE DIAGRAM

NOT TO SCALE

ISSUED FOR BID FEBRUARY 2026

CAUTION:IF SHEET IS LESS THAN 34"x22" USE GRAPHIC SCALE

THIS DRAWING PRODUCED ON AUTOCAD-DO NOT REVISE MANUALLY

"THIS DOCUMENT IS THE PROPERTY OF NAVAL FACILITIES ENGINEERING COMMAND, PREPARED BY TETRA TECH ENGINEERING CORPORATION PC, AND IS PROVIDED UPON THE CONDITION THAT IT WILL NOT BE REPRODUCED, COPIED, OR ISSUED TO A THIRD PARTY, AND WILL BE USED SOLELY FOR THE ORIGINAL INTENDED PURPOSE AND SOLELY FOR THE EXECUTION OR REVIEW OF THE ENGINEERING CONSTRUCTION OF THE PROJECT."

IT IS A VIOLATION OF THE NEW YORK STATE EDUCATION LAW, ARTICLE 145, FOR ANY PERSON, UNLESS UNDER THE DIRECTION OF A NEW YORK STATE LICENSED PROFESSIONAL ENGINEER, TO ALTER AN ITEM ON THIS DOCUMENT IN ANY WAY.

SYM	DESCRIPTION	DATE	APPR

NAVFAC

STATE OF NEW YORK · JOSEPH K. HOOVER · LICENSED PROFESSIONAL ENGINEER · SEAL

TETRA TECH
www.tetratech.com
4433 CORPORATION LANE, SUITE 200
VIRGINIA BEACH, VA 23462
PHONE: (757) 461-3788 FAX: (757) 461-4148
AE INFO

APPROVED
FOR COMMANDER NAVFAC

ACTIVITY
As per document from Nicole Coward, NAVFAC MID/LANT PLL/EV3

SATISFACTORY TO DATE 4/24/2026

DES. JKH/RLH | DRN RLH | CHK JKH

PM/CM
BRANCH MANAGER
CHIEF ENGIARCH
FIRE PROTECTION

DEPARTMENT OF THE NAVY
NAVAL FACILITIES ENGINEERING SYSTEMS COMMAND
NAVAL FACILITIES ENGINEERING SYSTEMS COMMAND – MID-ATLANTIC
NAVAL STATION - NORFOLK, VA
NAVAL WEAPONS INDUSTRIAL RESERVE PLANT
BETHPAGE, NEW YORK
PHASE III - GROUNDWATER TREATMENT PLANT
SINGLE LINE DIAGRAM

SCALE: AS NOTED
EPROJECT NO.:
CONSTR. CONTR. NO.
NAVFAC DRAWING NO.
SHEET OF
E-601

DRAWFORM REVISION 28 AUGUST 2020

4/20/2026 11:54:19 AM E-601
Autodesk Docs://1120080905 WE24 Navy Bethpage NY-Phase III IE-1120080905_PN4/EBR_GWTP_v2023.rvt

Switchboard: MCC-RW9

Location: RECOVERY WELL 9
Supply From: UTILITY TRANSFORMER
Mounting: PAD MOUNTED
Enclosure: NEMA 4X

Volts: 120/240 Single
Phases: 1
Wires: 3

A.I.C. Rating: 22kAIC
Mains Type: MCB
Bus Rating: 400 A
MCB Rating: 300 A

Notes:

CKT	Circuit Description	# of Poles	Frame Size	Trip Rating	Load	Remarks
1	SPD - POSITION 1-3	2	50 A	30 A	1 VA	
2	RECOVERY WELL 9 (RW9) - POSITION 2-1	2	200 A	200 A	33500 VA	
3	SPARE - POSITION 3-1	2	200 A	200 A	0 VA	
4	SPARE - POSITION 4-1	2	200 A	200 A	0 VA	
5	PANEL R9 - POSITION 4-2	2	100 A	60 A	3296 VA	
6	SPARE - POSITION 4-3	2	150 A	150 A	0 VA	
7						
8						
9						
10						
11						
12						
				Total Conn. Load:	36797 VA	
				Total Amps:	153 A	

Legend:
WT

Load Classification	Connected Load	Demand Factor	Estimated Demand	Panel Totals	
Receptacle	180 VA	100.00%	180 VA		
Non-Continuous	1100 VA	100.00%	1100 VA	Total Conn. Load:	36797 VA
Mechanical Equipment	34516 VA	100.00%	34516 VA	Total Est. Demand:	36797 VA
Spare	1001 VA	100.00%	1001 VA	Total Conn. Current:	153 A
				Total Est. Demand Current:	153 A

Notes:

Branch Panel: R9

Location: RECOVERY WELL 9
Supply From: MCC-RW9
Mounting: Surface
Enclosure: NEMA 3R

Volts: 120/240 Single
Phases: 1
Wires: 3

A.I.C. Rating: 22kAIC
Mains Type: MCB
Bus Rating: 100 A
MCB Rating: 60 A

Notes:

CKT	Circuit Description	Trip	Poles	A		B		Poles	Trip	Circuit Description	CKT
1	RECEPT - RW9 WELL	20 A	1	0.18	1.00			1	20 A	UPS	2
3	IOP-5	20 A	1			1.02					4
5	HEAT TRACE	20 A	1	1.00							6
7	WELL SITE AREA LIGHTING	15 A	1			0.10					8
9											10
11											12
13											14
15											16
17											18
			Total Load:	2.18 kVA		1.12 kVA					
			Total Amps:	18 A		9 A					

(1)

Legend:

Load Classification	Connected Load	Demand Factor	Estimated Demand	Panel Totals	
Receptacle	180 VA	100.00%	180 VA		
Non-Continuous	1100 VA	100.00%	1100 VA	Total Conn. Load:	3.30 kVA
Mechanical Equipment	1016 VA	100.00%	1016 VA	Total Est. Demand:	3.30 kVA
Spare	1000 VA	100.00%	1000 VA	Total Conn. Current:	14 A
				Total Est. Demand Current:	14 A

Notes:

KEY NOTES:

1. CONTRACTOR SHALL COORDINATE EXACT HEAT TRACE OVER CURRENT PROTECTION DEVICE AND BRANCH CIRCUIT SIZE WITH FINAL HEAT TRACE SIZING.

ISSUED FOR BID FEBRUARY 2026

CAUTION:IF SHEET IS LESS THAN 34"x22" USE GRAPHIC SCALE

THIS DRAWING PRODUCED ON AUTOCAD DO NOT REVISE MANUALLY

"THIS DOCUMENT IS THE PROPERTY OF NAVAL FACILITIES ENGINEERING COMMAND, PREPARED BY TETRA TECH ENGINEERING CORPORATION PC, AND IS PROVIDED UPON THE CONDITION THAT IT WILL NOT BE REPRODUCED, COPIED, OR ISSUED TO A THIRD PARTY, AND WILL BE USED SOLELY FOR THE ORIGINAL INTENDED PURPOSE AND SOLELY FOR THE EXECUTION OR REVIEW OF THE ENGINEERING CONSTRUCTION OF THE PROJECT".

IT IS A VIOLATION OF THE NEW YORK STATE EDUCATION LAW, ARTICLE 145, FOR ANY PERSON, UNLESS UNDER THE DIRECTION OF A NEW YORK STATE LICENSED PROFESSIONAL ENGINEER, TO ALTER AN ITEM ON THIS DOCUMENT IN ANY WAY.

SYM	DESCRIPTION	DATE	APPR

NAVFAC

STATE OF NEW YORK · JOSEPH K. HOOVER · LICENSED PROFESSIONAL ENGINEER · SEAL

TETRA TECH
www.tetratech.com
4433 CORPORATION LANE, SUITE 300
VIRGINIA BEACH, VA 23462
PHONE: (757) 481-3758 FAX: (757) 481-4148
AE INFO

APPROVED
FOR COMMANDER NAVFAC 4/30/2026

ACTIVITY
As per document from Nicole Coward, NAVFAC MIDLANT PLL/EV3

SATISFACTORY TO DATE 4/24/2026

DES JKH/RLH DRW RLH CHK JKH

PM/CM
BRANCH MANAGER
CHIEF ENG/ARCH
FIRE PROTECTION

DEPARTMENT OF THE NAVY
NAVAL FACILITIES ENGINEERING SYSTEMS COMMAND
NAVAL FACILITIES ENGINEERING SYSTEMS COMMAND ~ MID-ATLANTIC
NAVAL STATION - NORFOLK, VA.
NAVAL WEAPONS INDUSTRIAL RESERVE PLANT
BETHPAGE, NEW YORK

PHASE III - GROUNDWATER TREATMENT PLANT

WELL SITE ELECTRICAL SCHEDULES

SCALE: AS NOTED
EPROJECT NO.:
CONSTR. CONTR. NO.
NAVFAC DRAWING NO.
SHEET OF
E-602

DRAWFORM REVISION: 25 AUGUST 2020

4/30/2026 11:54:19 AM E-602
Autodesk Docs://1120260005-WEQ4 Navy- Bethpage NY-Phase III IE-1120260005_PHASEIII_GWTP_v2023.rvt

Switchboard: MCC-RW10A

Location: RECOVERY WELL 10A
Supply From: UTILITY TRANSFORMER
Mounting: PAD MOUNTED
Enclosure: NEMA 4X

Volts: 120/240 Single
Phases: 1
Wires: 3

A.I.C. Rating: 22kAIC
Mains Type: MCB
Mains Rating: 400 A
MCB Rating: 400 A

Notes:

CKT	Circuit Description	# of Poles	Frame Size	Trip Rating	Load	Remarks
1	SPD - POSITION 1-3	2	50 A	30 A	0 VA	
2	RECOVERY WELL 10A (RW10A) - POSITION 2-1	2	200 A	200 A	51623 VA	
3	SPARE - POSITION 3-1	2	200 A	200 A	0 VA	
4	SPARE - POSITION 4-1	2	200 A	200 A	0 VA	
5	PANEL R10A - POSITION 4-2	2	100 A	60 A	3296 VA	
6	SPARE - POSITION 4-3	2	150 A	150 A	0 VA	
7						
8						
9						
10						
11						
12						
				Total Conn. Load:	54919 VA	
				Total Amps:	229 A	

Legend:

Load Classification	Connected Load	Demand Factor	Estimated Demand	Panel Totals	
Receptacle	180 VA	100.00%	180 VA		
Non-Continuous	1000 VA	100.00%	1000 VA	Total Conn. Load:	54919 VA
Mechanical Equipment	52639 VA	100.00%	52639 VA	Total Est. Demand:	54919 VA
Spare	1100 VA	100.00%	1100 VA	Total Conn. Current:	229 A
				Total Est. Demand Current:	229 A

Notes:

Branch Panel: R10A

Location: RECOVERY WELL 10A
Supply From: MCC-RW10A
Mounting: Surface
Enclosure: NEMA 3R

Volts: 240/120 Single
Phases: 1
Wires: 3

A.I.C. Rating: 22kAIC
Mains Type: MCB
Mains Rating: 100 A
MCB Rating: 60 A

Notes:

CKT	Circuit Description	Trip	Poles	A		B		Poles	Trip	Circuit Description	CKT
1	IOP-6	20 A	1	1.02	1.00			1	20 A	UPS	2
3	HEAT TRACE	20 A	1			1.00					4
5	RECEPT - RW10A WELL	20 A	1	0.18							6
7	WELL SITE AREA LIGHTING	20 A	1			0.10					8
9											10
11											12
13											14
15											16
17											18
			Total Load:	2.20 kVA		1.10 kVA					
			Total Amps:	18 A		9 A					

(1)

Legend:

Load Classification	Connected Load	Demand Factor	Estimated Demand	Panel Totals	
Receptacle	180 VA	100.00%	180 VA		
Non-Continuous	1000 VA	100.00%	1000 VA	Total Conn. Load:	3.30 kVA
Mechanical Equipment	1016 VA	100.00%	1016 VA	Total Est. Demand:	3.30 kVA
Spare	1100 VA	100.00%	1100 VA	Total Conn. Current:	14 A
				Total Est. Demand Current:	14 A

Notes:

KEY NOTES:

1. CONTRACTOR SHALL COORDINATE EXACT HEAT TRACE OVER CURRENT PROTECTION DEVICE AND BRANCH CIRCUIT SIZE WITH FINAL HEAT TRACE SIZING.

ISSUED FOR BID FEBRUARY 2026

CAUTION:IF SHEET IS LESS THAN 34"x22" USE GRAPHIC SCALE

THIS DRAWING PRODUCED ON AUTOCAD DO NOT REVISE MANUALLY

"THIS DOCUMENT IS THE PROPERTY OF NAVAL FACILITIES ENGINEERING COMMAND, PREPARED BY TETRA TECH ENGINEERING CORPORATION PC, AND IS PROVIDED UPON THE CONDITION THAT IT WILL NOT BE REPRODUCED, COPIED, OR ISSUED TO A THIRD PARTY, AND WILL BE USED SOLELY FOR THE ORIGINAL INTENDED PURPOSE AND SOLELY FOR THE EXECUTION OR REVIEW OF THE ENGINEERING CONSTRUCTION OF THE PROJECT."

IT IS A VIOLATION OF THE NEW YORK STATE EDUCATION LAW, ARTICLE 145, FOR ANY PERSON, UNLESS UNDER THE DIRECTION OF A NEW YORK STATE LICENSED PROFESSIONAL ENGINEER, TO ALTER AN ITEM ON THIS DOCUMENT IN ANY WAY.

SYM	DESCRIPTION	DATE	APPR

NAVFAC

STATE OF NEW YORK · JOSEPH K. MOOYER · LICENSED PROFESSIONAL ENGINEER · SEAL

TETRA TECH
www.tetratech.com
4433 CORPORATION LANE, SUITE 300
VIRGINIA BEACH, VA 23462
PHONE: (757) 461-3768 FAX: (757) 461-4148
AE INFO

APPROVED
FOR COMMANDER NAVFAC
ACTIVITY
As per document from Nicole Cowand, NAVFAC MIDLANT PLL/EV3
SATISFACTORY TO DATE 4/24/2026
DES. JKH/RLH DRW RLH CHK JKH
PM/CM
BRANCH MANAGER
CHIEF ENGIARCH
FIRE PROTECTION

DEPARTMENT OF THE NAVY
NAVAL FACILITIES ENGINEERING SYSTEMS COMMAND
NAVAL FACILITIES ENGINEERING SYSTEMS COMMAND – MID-ATLANTIC
NAVAL STATION - NORFOLK, VA
NAVAL WEAPONS INDUSTRIAL RESERVE PLANT
BETHPAGE, NEW YORK
PHASE III - GROUNDWATER TREATMENT PLANT
WELL SITE ELECTRICAL SCHEDULES

SCALE: AS NOTED
EPROJECT NO.:
CONSTR. CONTR. NO.
NAVFAC DRAWING NO.
SHEET OF
E-603

DRAWFORM REVISION: 25 AUGUST 2020

4/20/2026 11:54:29 AM E-603
Autodesk Docs://1120080005-WE24 Navy- Bethpage NY-Phase III /E-112008005_PHASEIII_GWTP_v2023.rvt

SWITCHBOARD: MCC-1

LOCATION: ELECTRICAL 106
SUPPLY FROM: T1
MOUNTING: PAD MOUNTED NEMA 1

VOLTS: 480V Delta
PHASES: 3
WIRES: 3

A.I.C. RATING: 65KA
MAINS TYPE: MCB
MAINS RATING: 1200 A

CKT	Circuit Description	# of Poles	Frame Size	Trip Rating	Load	Remarks
1	MECHANICAL EQUIPMENT	3	400 A	20 A	0 VA	
2	P-100A	3	150 A	100 A	37300 VA	
3	P-100B	3	150 A	100 A	0 VA	
4	AC-610	3	150 A	100 A	46625 VA	
5	AC-620	3	150 A	100 A	46625 VA	
6	P-500A	3	100 A	50 A	18650 VA	
7	P-500B	3	100 A	50 A	0 VA	
8	P-400A	3	150 A	50 A	18650 VA	
9	TRANSFROMER T2 (IN TREATMENT BUILDING FOR 'RP' PANEL)	3	150 A	150 A	34891 VA	
10	P-400B	3	150 A	50 A	0 VA	
11	SPARE	1	150 A	50 A	0 VA	
12	AOP REACTOR	3	150 A	30 A	3000 VA	
13	T-740	3	150 A	20 A	12840 VA	
14	MAU-1	3	150 A	60 A	40000 VA	
15	PANELBOARD PP1	3	250 A	250 A	95832 VA	
16	T-700 (OZONE GENERATOR)	3	150 A	50 A	24600 VA	
17	RECOVERY WELL 8 (RW8)	3	150 A	70 A	38717 VA	
18	B-200A & 200B	3	400 A	20 A	2238 VA	
19	PANELBOARD HP1	3	250 A	250 A	135000 VA	
20	HP2	3	400 A	20 A	83665 VA	
21	PANELBOARD PP2 (IN OFFICE BUILDING)	3	150 A	100 A	45492 VA	
				Total Conn. Load:	684125 VA	
				Total Amps:	823 A	

Load Classification	Connected Load	Demand Factor	Estimated Demand	Panel Totals	
Other	0 VA	0.00%	0 VA		
LIGHTING	4914 VA	125.00%	6142 VA	Total Conn. Load:	684125 VA
Receptacle	16180 VA	74.72%	12090 VA	Total Est. Demand:	681254 VA
Power	601 VA	100.00%	601 VA	Total Conn. Current:	823 A
Mechanical Equipment	660931 VA	100.00%	660931 VA	Total Est. Demand Current:	819 A
Spare	1500 VA	100.00%	1500 VA		

Branch Panel: PP1

Location: ELECTRICAL 106
Supply From: MCC-1
Mounting: Surface
Enclosure: Type 1

Volts: 480V Delta
Phases: 3
Wires: 3

A.I.C. Rating: 65KA
Mains Type: MLO
Mains Rating: 400 A

Notes:

CKT	Circuit Description	Trip	Poles	A		B		C		Poles	Trip	Circuit Description	CKT
1				0.75	0.75								2
3	EQM-110	20 A	3			0.75	0.75			3	20 A	OVERHEAD DOORS	4
5								0.75	0.75				6
7				1.24	4.10								8
9	P-1	20 A	3			1.24	4.10			3	20 A	HP-02	10
11								1.24	4.10				12
13				4.69	10.42								14
15	HP-01	20 A	3			4.69	10.42			3	40 A	T-650	16
17								4.69	10.42				18
19				10.00									20
21	EWH-1	20 A	3			10.00							22
23								10.00					24
25				0.00									26
27	SPARE	20 A	3			0.00							28
29								0.00					30
31				0.00	0.00								32
33	SPARE	20 A	3			0.00	0.00			3	20 A	SPARE	34
35								0.00	0.00				36
37	SPACE	--	1	--	--					1	--	SPACE	38
39	SPACE	--	1			--	--			1	--	SPACE	40
41	SPACE	--	1					--	--	1	--	SPACE	42
		Total Load:		31.94 kVA		31.94 kVA		31.94 kVA					
		Total Amps:		115 A		115 A		115 A					

Legend:

Load Classification	Connected Load	Demand Factor	Estimated Demand	Panel Totals	
Mechanical Equipment	95832 VA	100.00%	95832 VA		
				Total Conn. Load:	95.83 kVA
				Total Est. Demand:	95.83 kVA
				Total Conn. Current:	115 A
				Total Est. Demand Current:	115 A

Notes:

Branch Panel: HP1

Location: ELECTRICAL 106
Supply From: MCC-1
Mounting: Surface
Enclosure: Type 1

Volts: 480V Delta
Phases: 3
Wires: 3

A.I.C. Rating: 65KA
Mains Type: MLO
Mains Rating: 400 A

Notes:

CKT	Circuit Description	Trip	Poles	A		B		C		Poles	Trip	Circuit Description	CKT
1				4.50	4.50								2
3	IRH-01 (INFRARED HEATER)	20 A	3			4.50	4.50			3	20 A	IRH-02 (INFRARED HEATER)	4
5								4.50	4.50				6
7				4.50	4.50								8
9	IRH-03 (INFRARED HEATER)	20 A	3			4.50	4.50			3	20 A	IRH-04 (INFRARED HEATER)	10
11								4.50	4.50				12
13				4.50	4.50								14
15	IRH-05 (INFRARED HEATER)	20 A	3			4.50	4.50			3	20 A	IRH-06 (INFRARED HEATER)	16
17								4.50	4.50				18
19				4.50	4.50								20
21	IRH-07 (INFRARED HEATER)	20 A	3			4.50	4.50			3	20 A	IRH-08 (INFRARED HEATER)	22
23								4.50	4.50				24
25				4.50	4.50								26
27	IRH-09 (INFRARED HEATER)	20 A	3			4.50	4.50			3	20 A	IRH-10 (INFRARED HEATER)	28
29								4.50	4.50				30
31				0.00	0.00								32
33	SPARE	20 A	3			0.00	0.00			3	20 A	SPARE	34
35								0.00	0.00				36
37	SPACE	--	1	--	--					1	--	SPACE	38
39	SPACE	--	1			--	--			1	--	SPACE	40
41	SPACE	--	1					--	--	1	--	SPACE	42
		Total Load:		45.00 kVA		45.00 kVA		45.00 kVA					
		Total Amps:		162 A		162 A		162 A					

Legend:

Load Classification	Connected Load	Demand Factor	Estimated Demand	Panel Totals	
Mechanical Equipment	135000 VA	100.00%	135000 VA		
				Total Conn. Load:	135.00 kVA
				Total Est. Demand:	135.00 kVA
				Total Conn. Current:	162 A
				Total Est. Demand Current:	162 A

Notes:

Branch Panel: HP2

Location: ELECTRICAL 106
Supply From: MCC-1
Mounting: Surface
Enclosure: Type 1

Volts: 480V Delta
Phases: 3
Wires: 3

A.I.C. Rating: 65KA
Mains Type: MLO
Mains Rating: 400 A

Notes:

CKT	Circuit Description	Trip	Poles	A		B		C		Poles	Trip	Circuit Description	CKT
1				0.06	0.04								2
3	EF-01,03,07 & 08	20 A	3			0.06	0.04			3	20 A	EF-02,05,06,09 & 10	4
5								0.06	0.04				6
7				5.27	2.17								8
9	EUH-03 (ELEC. UNIT HEATER)	25 A	3			5.27	2.17			3	20 A	EUH-05 (ELEC. UNIT HEATER)	10
11								5.27	2.17				12
13				4.70	2.17								14
15	EUH-02 (ELEC. UNIT HEATER)	20 A	3			4.70	2.17			3	20 A	EUH-01 (ELEC. UNIT HEATER)	16
17								4.70	2.17				18
19				5.27	1.87								20
21	EUH-09 (ELEC. UNIT HEATER)	25 A	3			5.27	1.87			3	20 A	EUH-07 (ELEC. UNIT HEATER)	22
23								5.27	1.87				24
25				2.17	2.63								26
27	EUH-04 (ELEC. UNIT HEATER)	20 A	3			2.17	2.63			3	20 A	EUH-06 (ELEC. UNIT HEATER)	28
29								2.17	2.63				30
31				0.00	0.00								32
33	SUMP PUMP 800A	20 A	3			0.00	0.00			3	20 A	SPARE	34
35								0.00	0.00				36
37				1.55	0.00								38
39	SUMP PUMP 800B	20 A	3			1.55	0.00			3	20 A	SPARE	40
41								1.55	0.00				42
		Total Load:		27.89 kVA		27.89 kVA		27.89 kVA					
		Total Amps:		101 A		101 A		101 A					

Legend:

Load Classification	Connected Load	Demand Factor	Estimated Demand	Panel Totals	
Mechanical Equipment	83665 VA	100.00%	83665 VA		
				Total Conn. Load:	83.66 kVA
				Total Est. Demand:	83.66 kVA
				Total Conn. Current:	101 A
				Total Est. Demand Current:	101 A

Notes:

ISSUED FOR BID FEBRUARY 2026

CAUTION:IF SHEET IS LESS THAN 34"x22" USE GRAPHIC SCALE

SYM	DESCRIPTION	DATE	APPR

NAVFAC

STATE OF NEW YORK · JOSEPH K. HOOVER · LICENSED PROFESSIONAL ENGINEER · SEAL

TETRA TECH
www.tetratech.com
4433 CORPORATION LANE, SUITE 300
VIRGINIA BEACH, VA 23462
PHONE: (757) 481-3788 FAX: (757) 481-4148
AE INFO

APPROVED: FOR COMMANDER NAVFAC 4/30/2026

ACTIVITY: As per document from Nicole Coward, NAVFAC MIDLANT PLL/EV3

SATISFACTORY TO DATE 4/24/2026

DES JKH/RLH | DRW RLH | CHK JKH

PM/CM
BRANCH MANAGER
CHIEF ENG/ARCH
FIRE PROTECTION

DEPARTMENT OF THE NAVY
NAVAL FACILITIES ENGINEERING SYSTEMS COMMAND
NAVAL FACILITIES ENGINEERING SYSTEMS COMMAND ~ MID-ATLANTIC
NAVAL STATION - NORFOLK, VA
NAVAL WEAPONS INDUSTRIAL RESERVE PLANT
BETHPAGE, NEW YORK
PHASE III - GROUNDWATER TREATMENT PLANT
ELECTRICAL SCHEDULES

SCALE: AS NOTED
EPROJECT NO.:
CONSTR. CONTR. NO.
NAVFAC DRAWING NO.
SHEET OF
E-604

DRAWFORM REVISION: 25 AUGUST 2025

THIS DRAWING PRODUCED ON AUTOCAD DO NOT REVISE MANUALLY

"THIS DOCUMENT IS THE PROPERTY OF NAVAL FACILITIES ENGINEERING COMMAND, PREPARED BY TETRA TECH ENGINEERING CORPORATION PC, AND IS PROVIDED UPON THE CONDITION THAT IT WILL NOT BE REPRODUCED, COPIED, OR ISSUED TO A THIRD PARTY, AND WILL BE USED SOLELY FOR THE ORIGINAL INTENDED PURPOSE AND SOLELY FOR THE EXECUTION OR REVIEW OF THE ENGINEERING CONSTRUCTION OF THE PROJECT".

IT IS A VIOLATION OF THE NEW YORK STATE EDUCATION LAW, ARTICLE 145, FOR ANY PERSON, UNLESS UNDER THE DIRECTION OF A NEW YORK STATE LICENSED PROFESSIONAL ENGINEER, TO ALTER AN ITEM ON THIS DOCUMENT IN ANY WAY.

4/20/2026 11:54:21 AM E-604
Autodesk Docs://1120/06005-W024 Navy Bethpage NY-Phase III /E-1120/06005_PHASEIII_GWTP_v2023.rvt

Branch Panel: PP2

Location: ELEC./MECH. 108
Supply From: MCC-1
Mounting: Surface
Enclosure: Type 1

Volts: 480V Delta
Phases: 3
Wires: 3

A.I.C. Rating: 42KA
Mains Type: MCB
Mains Rating: 100 A
MCB Rating: 100 A

Notes:

CKT	Circuit Description	Trip	Poles	A		B		C		Poles	Trip	Circuit Description	CKT
1				3.79	0.25								2
3	T3 - 30KVA TRANSFORMER	60 A	3			3.81	0.25			3	20 A	EF-04	4
5								3.76	0.25				6
7				5.27	5.86								8
9	EUH-08 (ELEC. UNIT HEATER)	25 A	3			5.27	5.86			3	30 A	HP-03/AC-01	10
11								5.27	5.86				12
13				0.00	0.00								14
15	SPD	30 A	3			0.00	0.00			3	20 A	SPARE	16
17								0.00	0.00				18
19	SPACE	–	1	–	0.00								20
21	SPACE	–	1			–	0.00			3	30 A	SPARE	22
23	SPACE	–	1					–	0.00				24
25	SPACE	–	1	–	–					1	--	SPACE	26
27	SPACE	–	1			–	–			1	--	SPACE	28
29	SPACE	–	1					–	–	1	--	SPACE	30
		Total Load:		15.16 kVA		15.19 kVA		15.14 kVA					
		Total Amps:		55 A		55 A		55 A					

Legend:

Load Classification	Connected Load	Demand Factor	Estimated Demand	Panel Totals	
Other	0 VA	0.00%	0 VA		
Power	450 VA	100.00%	450 VA	Total Conn. Load:	45.49 kVA
LIGHTING	511 VA	125.00%	639 VA	Total Est. Demand:	45.17 kVA
Receptacle	8900 VA	94.94%	8450 VA	Total Conn. Current:	55 A
Mechanical Equipment	35630 VA	100.00%	35630 VA	Total Est. Demand Current:	54 A

Notes:

Branch Panel: DP

Location: ELEC./MECH. 108
Supply From: T3
Mounting: Surface
Enclosure: Type 1

Volts: 208Y/120V
Phases: 3
Wires: 4

A.I.C. Rating: 42KA
Mains Type: MCB
Mains Rating: 100 A
MCB Rating: 100 A

Notes:

CKT	Circuit Description	Trip	Poles	A		B		C		Poles	Trip	Circuit Description	CKT
1	LIGHTING - EXTERIOR	20 A	1	0.02	0.27					1	20 A	LIGHTING - OFFICE 101,102, RR 103	2
3	RECEPT-OPEN OFFICE 101	20 A	1			0.90	0.18			1	20 A	RECEPT-BREAK 102	4
5	LIGHTIING - UNDER CABINET (101 & 107)	20 A	1					0.04	0.18	1	20 A	RECEPT - ELEC/MECH 108	6
7	RECEPT-CONFERENCE 106	20 A	1	0.54	0.80					1	20 A	RECEPT-BREAK 102 (REF)	8
9	RECEPT-OPEN OFFICE 101 (COUNTER)	20 A	1			0.36	0.36			1	20 A	QUAD RECEPT-DATA RACK	10
11	LIGHTING- OFFICE 104, CLST 105, CONF. 106	20 A	1					0.27	0.36	1	20 A	LIGHTING - STORAGE 107, ELEC/MECH 108	12
13	RECEPT - RESTROOM 103	20 A	1	0.18	0.36					1	20 A	RECEPT-EXTERIOR	14
15	EWH-2	20 A	2			0.75	0.54			1	20 A	RECEPT-EXTERIOR	16
17								0.75	0.18	1	20 A	RECEPT-EXTERIOR	18
19	QUAD RECEPT - OPEN OFFICE 101	20 A	1	0.36	0.54					1	20 A	RECEPT-CONFERENCE 106	20
21	RECEPT-CONFERENCE 106 (TV &...	20 A	1			0.72	--			1	--	SPACE	22
23	RECEPT-STORAGE 107	20 A	1					0.36	0.36	1	20 A	RECEPT - STORAGE 107 (COUNTER)	24
25	RECEPT - OPEN OFFICE 101 & STORAGE 107	20 A	1	0.72	--					1	--	SPACE	26
27	SPACE	–	1			--	--			1	--	SPACE	28
29	RECEPT-STORAGE 107	20 A	1					0.54	0.72	1	20 A	RECEPT-OFFICE 104	30
31	SPACE	–	1	--	--					1	--	SPACE	32
33	SPACE	–	1			--	--			1	--	SPACE	34
35	SPARE	20 A	1					0.00	0.00	1	20 A	SPARE	36
37	SPARE	20 A	1	0.00	0.00								38
39	SPARE	20 A	1			0.00	0.00			3	30 A	SPD	40
41	SPARE	20 A	1					0.00	0.00				42
		Total Load:		3.79 kVA		3.81 kVA		3.76 kVA					
		Total Amps:		32 A		32 A		31 A					

Legend:

Load Classification	Connected Load	Demand Factor	Estimated Demand	Panel Totals	
Other	0 VA	0.00%	0 VA		
Power	450 VA	100.00%	450 VA	Total Conn. Load:	11.36 kVA
LIGHTING	511 VA	125.00%	639 VA	Total Est. Demand:	11.04 kVA
Receptacle	8900 VA	94.94%	8450 VA	Total Conn. Current:	32 A
Mechanical Equipment	1500 VA	100.00%	1500 VA	Total Est. Demand Current:	31 A

Notes:

Branch Panel: RP1

Location: ELECTRICAL 106
Supply From: T2
Mounting: Surface
Enclosure: Type 1

Volts: 208Y/120V
Phases: 3
Wires: 4

A.I.C. Rating: 42KA
Mains Type: MCB
Mains Rating: 225 A
MCB Rating: 225 A

Notes:

CKT	Circuit Description	Trip	Poles	A		B		C		Poles	Trip	Circuit Description	CKT
1	RECEPT - CONTROL ROOM 107	20 A	1	0.18	1.50					1	20 A	EYE WASH	2
3	RECEPT - CONTROL ROOM 107	20 A	1			0.80	1.50			1	20 A	ES-1 (EYE WASH)	4
5	QUAD RECEPT-DATA RACK	20 A	1					0.36	0.50	1	20 A	EYE WASH	6
7	RECEPT-ELECTRICAL ROOM 106	20 A	1	0.36	0.54					1	20 A	RECEPT-CONTROL ROOM 107	8
9	QUAD RECEPT-DATA RACK	20 A	1			0.36	0.54			1	20 A	RECEPT-EQUIPMENT AREA 100	10
11	RECEPT-EXTERIOR	20 A	1					0.72	0.36	1	20 A	RECEPT-EQUIPMENT AREA 110 & 111	12
13	RECEPT-ROOMS 100, 108, 109	20 A	1	0.72	–					1	--	SPACE	14
15	RECEPT-EQUIPMENT AREA 100	20 A	1			0.72	–			1	--	SPACE	16
17	RECEPT-CONTROL ROOM 107	20 A	1					0.36	0.72	1	20 A	RECEPT-EXTERIOR	18
19	SUMP PUMPS P-911, 921, 931	20 A	1	1.50	1.50					1	20 A	FACP	20
21	SPACE	–	1			–	–			1	--	SPACE	22
23	SPACE	–	1					–	–	1	--	SPACE	24
25	SPARE	20 A	1	0.00	0.00					1	20 A	SPARE	26
27	SPARE	20 A	1			0.00	0.00			1	20 A	SPARE	28
29	SPARE	20 A	1					0.00	0.00	1	20 A	SPARE	30
31	RECEPT - TOILET 103	20 A	1	0.54	0.00								32
33	ECH-01	20 A	1			1.80	0.00			3	30 A	SPD	34
35	ECH-02	20 A	1					1.80	0.00				36
37	ECH-03	20 A	1	1.80	5.21								38
39	SPARE	40 A	2			0.00	5.26			3	100 A	PANELBOARD RP2	40
41								0.00	5.24				42
		Total Load:		13.85 kVA		10.98 kVA		10.06 kVA					
		Total Amps:		117 A		93 A		84 A					

Legend:

Load Classification	Connected Load	Demand Factor	Estimated Demand	Panel Totals	
Power	150 VA	100.00%	150 VA		
LIGHTING	4402 VA	125.00%	5503 VA	Total Conn. Load:	34.89 kVA
Receptacle	7280 VA	100.00%	7280 VA	Total Est. Demand:	35.99 kVA
Mechanical Equipment	21559 VA	100.00%	21559 VA	Total Conn. Current:	97 A
Spare	1500 VA	100.00%	1500 VA	Total Est. Demand Current:	100 A

Notes:

Branch Panel: RP2

Location: ELECTRICAL 106
Supply From: RP1
Mounting: Surface
Enclosure: Type 1

Volts: 208Y/120V
Phases: 3
Wires: 4

A.I.C. Rating: 42KA
Mains Type: MLO
Mains Rating: 100 A
MCB Rating: 100 A

Notes:

CKT	Circuit Description	Trip	Poles	A		B		C		Poles	Trip	Circuit Description	CKT
1	CP-1	20 A	1	0.25	0.99					1	20 A	LIGHTING - ROOMS 108 THUR 111	2
3	LIGHTING - ROOMS 112 THUR 114	20 A	1			0.42	0.65			1	20 A	LIGHTING - ROOMS 101 THRU 107	4
5	LIGHTING - EXTERIOR WALL PACKS	20 A	1					0.44	0.98	1	20 A	IOP-1	6
7	LIGHTING - EQUIPMENT AREA 100	20 A	1	0.99	1.44					1	20 A	IOP-2	8
9	IOP-3	20 A	1			1.22	1.44			1	20 A	MMF CONTROL PANEL	10
11	LIGHTING - EQUIPMENT AREA 100	20 A	1					1.07	1.23	1	20 A	IOP-4	12
13	P-910A/B - CAUSTIC METERING PUMPS	20 A	1	0.20	0.67								14
15	P-920A/B - HYPO METERING PUMPS	20 A	1			0.20	0.67			3	20 A	CF-1 & CF-3	16
17	P-930A/B - H2O2 METERING PUMPS	20 A	1					0.20	0.67				18
19				0.67	–					1	--	SPACE	20
21	CF-2 & CF-4	20 A	3			0.67	–			1	--	SPACE	22
23								0.67	–	1	--	SPACE	24
25	SPACE	–	1	--	--					1	--	SPACE	26
27	SPARE	40 A	2			0.00	–			1	--	SPACE	28
29								0.00	–	1	--	SPACE	30
31	SPARE	20 A	1	0.00	0.00					1	20 A	SPARE	32
33	SPARE	20 A	1			0.00	0.00			1	20 A	SPARE	34
35	SPARE	20 A	1					0.00	0.00	1	20 A	SPARE	36
37	SPARE	20 A	1	0.00	0.00								38
39	SPACE	–	1			--	0.00			3	30 A	SPD	40
41	SPACE	–	1					–	0.00				42
		Total Load:		5.21 kVA		5.26 kVA		5.24 kVA					
		Total Amps:		43 A		44 A		44 A					

Legend:

Load Classification	Connected Load	Demand Factor	Estimated Demand	Panel Totals	
Power	150 VA	100.00%	150 VA		
LIGHTING	4402 VA	125.00%	5503 VA	Total Conn. Load:	15.71 kVA
Mechanical Equipment	11159 VA	100.00%	11159 VA	Total Est. Demand:	16.81 kVA
				Total Conn. Current:	44 A
				Total Est. Demand Current:	47 A

Notes:

ISSUED FOR BID FEBRUARY 2026

CAUTION IF SHEET IS LESS THAN 34"x22" USE GRAPHIC SCALE

SYM	DESCRIPTION	DATE	APPR

NAVFAC

STATE OF NEW YORK · JOSEPH K. HAGHIGHI · LICENSED PROFESSIONAL ENGINEER

TETRA TECH
www.tetratech.com
4433 CORPORATION LANE, SUITE 300
VIRGINIA BEACH, VA 23462
PHONE: (757) 461-3768 FAX: (757) 461-4148

APPROVED
FOR COMMANDER NAVFAC
ACTIVITY
As per document from Nicole Coward, NAVFAC MIDLANT PLL/EV3
SATISFACTORY TO DATE 4/24/2026
DES. JKH/RLH DRW RLH CHK JKH
PM/CM
BRANCH MANAGER
CHIEF ENGINEER
FIRE PROTECTION

DEPARTMENT OF THE NAVY
NAVAL FACILITIES ENGINEERING SYSTEMS COMMAND
NAVAL FACILITIES ENGINEERING SYSTEMS COMMAND – MID-ATLANTIC
NAVAL STATION - NORFOLK, VA
NAVAL WEAPONS INDUSTRIAL RESERVE PLANT
BETHPAGE, NEW YORK
PHASE III - GROUNDWATER TREATMENT PLANT
ELECTRICAL SCHEDULES

THIS DRAWING PRODUCED ON AUTOCAD DO NOT REVISE MANUALLY

"THIS DOCUMENT IS THE PROPERTY OF NAVAL FACILITIES ENGINEERING COMMAND, PREPARED BY TETRA TECH ENGINEERING CORPORATION PC, AND IS PROVIDED UPON THE CONDITION THAT IT WILL NOT BE REPRODUCED, COPIED, OR ISSUED TO A THIRD PARTY, AND WILL BE USED SOLELY FOR THE ORIGINAL INTENDED PURPOSE AND SOLELY FOR THE EXECUTION OR REVIEW OF THE ENGINEERING CONSTRUCTION OF THE PROJECT."

IT IS A VIOLATION OF THE NEW YORK STATE EDUCATION LAW, ARTICLE 145, FOR ANY PERSON, UNLESS UNDER THE DIRECTION OF A NEW YORK STATE LICENSED PROFESSIONAL ENGINEER, TO ALTER AN ITEM ON THIS DOCUMENT IN ANY WAY.

SCALE: AS NOTED
EPROJECT NO.:
CONSTR. CONTR. NO.
NAVFAC DRAWING NO.
SHEET OF
E-605

DRAWFORM REVISION: 25 AUGUST 2020

4/20/2026 11:54:22 AM E-605
Autodesk Docs://1120080005-WE24 Navy- Bethpage NY-Phase III E-112008005_PHASEIII_GWTP_v2023.rvt

MECHANICAL EQUIPMENT CONNECTIONS SCHEDULE

NAME	PANEL NAME	CKT #	LOAD DESCRIPTION	EQUIPMENT CIRCUIT INFORMATION							CABLE INFORMATION					EM POWER REQ	DISCONNECT INFORMATION					NAME	NOTES
				V	POLES	Φ	HP	kVA	MCA	MOCP	SETS	CCC COUNT	CCC SIZE	GND SIZE	CONDUIT SIZE		FURNISHED BY	INSTALLED BY	TYPE	SWITCH RATING	NEMA TYPE		
MECHANICAL																							
AC-01	PP2	8,10,12	AIR CONDITIONING UNIT	480	3	3	1	0	0 A	20 A	1	3	#12	#12	3/4"	No	MC	EC	UNFUSED	30 A	3R	AC-01	
AC-610	MCC-1	4	AC COMPRESSOR	480	3	3	50	46.625	56 A	60 A	1	3	#4	#6	1 1/2"	No	MC	EC	UNFUSED	60 A	3R	AC-610	
AC-620	MCC-1	5	AC COMPRESSOR	480	3	3	50	46.625	56 A	60 A	1	3	#4	#6	1 1/2"	No	MC	EC	UNFUSED	60 A	3R	AC-620	
AOP-300	MCC-1	12	AOP REACTOR	480	3	3	-	3	4 A	20 A	1	3	#12	#12	1 1/2"	No	MC	EC	UNFUSED	30 A	3R	AOP-300	
B-200A	MCC-1	18	AIR DRYER	480	3	3	3	2.238	3 A	30 A	1	3	#10	#12	3/4"	No	MC	EC	UNFUSED	30 A	3R	B-200A	
B-200B	MCC-1	1	AIR DRYER	480	3	3	3	0	0 A	30 A	1	3	#10	#12	3/4"	No	MC	EC	UNFUSED	30 A	3R	B-200B	
CF-1	RP2	14,16,18	PROPELLER FAN	208	3	3	-	1	3 A	20 A	1	3	#12	#12	3/4"	No	MC	EC	UNFUSED	30 A	3R	CF-1	
CF-2	RP2	19,21,23	PROPELLER FAN	208	3	3	-	1	3 A	20 A	1	3	#12	#12	3/4"	No	MC	EC	UNFUSED	30 A	3R	CF-2	
CF-3	RP2	14,16,18	PROPELLER FAN	208	3	3	-	1	3 A	20 A	1	3	#12	#12	3/4"	No	MC	EC	UNFUSED	30 A	3R	CF-3	
CF-4	RP2	19,21,23	PROPELLER FAN	208	3	3	-	1	3 A	20 A	1	3	#12	#12	3/4"	No	MC	EC	UNFUSED	30 A	3R	CF-4	
CP-1	RP2	1	CIRCULATING PUMP	120	1	1	1	0.25	2 A	20 A	1	2	#12	#12	3/4"	No	MC	EC	UNFUSED	30 A	3R	CP-1	
ECH-01	RP1	33	ELECTRIC CABINET HEATER	120	1	1	1	1.8	15 A	20 A	1	2	#12	#12	3/4"	No	MC	EC	UNFUSED	30 A	3R	ECH-01	
ECH-02	RP1	35	ELECTRIC CABINET HEATER	120	1	1	1	1.8	15 A	20 A	1	2	#12	#12	3/4"	No	MC	EC	UNFUSED	30 A	3R	ECH-02	
ECH-03	RP1	37	ELECTRIC CABINET HEATER	120	1	1	1	1.8	15 A	20 A	1	2	#12	#12	3/4"	No	MC	EC	UNFUSED	30 A	3R	ECH-03	
EF-01	HP2	1,3,5	EXHAUST FAN	480	3	3	1	0	0 A	20 A	1	3	#12	#12	3/4"	No	MC	EC	UNFUSED	30 A	3R	EF-01	
EF-02	HP2	2,4,6	EXHAUST FAN	480	3	3	1	0.03	0 A	20 A	1	3	#12	#12	3/4"	No	MC	EC	UNFUSED	30 A	3R	EF-02	
EF-03	HP2	1,3,5	EXHAUST FAN	480	3	3	1	0.025	0 A	20 A	1	3	#12	#12	3/4"	No	MC	EC	UNFUSED	30 A	3R	EF-03	
EF-04	PP2	2,4,6	EXHAUST FAN	480	3	3	1	0.746	1 A	20 A	1	3	#12	#12	3/4"	No	MC	EC	UNFUSED	30 A	3R	EF-04	
EF-05	HP2	2,4,6	EXHAUST FAN	480	3	3	1	0.03	0 A	20 A	1	3	#12	#12	3/4"	No	MC	EC	UNFUSED	30 A	3R	EF-05	
EF-06	HP2	2,4,6	EXHAUST FAN	480	3	3	1	0.019	0 A	20 A	1	3	#12	#12	3/4"	No	MC	EC	UNFUSED	30 A	3R	EF-06	
EF-07	HP2	1,3,5	EXHAUST FAN	480	3	3	1	0.037	0 A	20 A	1	3	#12	#12	3/4"	No	MC	EC	UNFUSED	30 A	3R	EF-07	
EF-08	HP2	1,3,5	EXHAUST FAN	480	3	3	1	0.124	0 A	20 A	1	3	#12	#12	3/4"	No	MC	EC	UNFUSED	30 A	3R	EF-08	
EF-10	HP2	2,4,6	EXHAUST FAN	480	3	3	-	0.019	0 A	20 A	1	3	#12	#12	3/4"	No	MC	EC	UNFUSED	30 A	3R	EF-10	
EF-10	HP2	2,4,6	EXHAUST FAN	480	3	3	-	0.019	0 A	20 A	1	3	#12	#12	3/4"	No	MC	EC	UNFUSED	30 A	3R	EF-10	
EQM-110	PP1	1,3,5	EQ PUMP	480	3	3	3	2.238	3 A	90 A	1	3	#1	#4	1 1/2"	No	MC	EC	UNFUSED	100 A	3R	EQM-110	
EUH-01	HP2	14,16,18	ELECTRIC UNIT HEATER	480	3	3	-	6.5	8 A	20 A	1	3	#10	#10	1"	No	MC	EC	UNFUSED	30 A	3R	EUH-01	
EUH-02	HP2	13,15,17	ELECTRIC UNIT HEATER	480	3	3	-	14.1	17 A	20 A	1	3	#10	#10	1"	No	MC	EC	UNFUSED	30 A	3R	EUH-02	
EUH-03	HP2	7,9,11	ELECTRIC UNIT HEATER	480	3	3	-	15.8	19 A	25 A	1	3	#10	#10	1"	No	MC	EC	UNFUSED	30 A	3R	EUH-03	
EUH-04	HP2	25,27,29	ELECTRIC UNIT HEATER	480	3	3	-	6.5	8 A	20 A	1	3	#10	#10	1"	No	MC	EC	UNFUSED	30 A	3R	EUH-04	
EUH-05	HP2	8,10,12	ELECTRIC UNIT HEATER	480	3	3	-	6.5	8 A	20 A	1	3	#10	#10	1"	No	MC	EC	UNFUSED	30 A	3R	EUH-05	
EUH-06	HP2	26,28,30	ELECTRIC UNIT HEATER	480	3	3	-	7.9	10 A	20 A	1	3	#10	#10	1"	No	MC	EC	UNFUSED	30 A	3R	EUH-06	
EUH-07	HP2	20,22,24	ELECTRIC UNIT HEATER	480	3	3	-	5.6	7 A	20 A	1	3	#10	#10	1"	No	MC	EC	UNFUSED	30 A	3R	EUH-07	
EUH-08	PP2	7,9,11	ELECTRIC UNIT HEATER	480	3	3	-	15.8	19 A	20 A	1	3	#10	#10	1"	No	MC	EC	UNFUSED	30 A	3R	EUH-08	
EUH-09	HP2	19,21,23	ELECTRIC UNIT HEATER	480	3	3	-	15.8	19 A	20 A	1	3	#10	#10	1"	No	MC	EC	UNFUSED	30 A	3R	EUH-09	
EWH-1	PP1	19,21,23	ELECTRIC WATER HEATER	480	3	3	-	30	36 A	50 A	1	3	#6	#8	1 1/4"	No	MC	EC	UNFUSED	60 A	3R	EWH-1	
EWH-2	DP	15,17	ELECTRIC WATER HEATER	208	2	1	-	1.5	7 A	20 A	1	3	#6	#8	1 1/4"	No	MC	EC	UNFUSED	60 A	3R	EWH-2	
HP-01	PP1	13,15,17	HEAT PUMP	480	3	3	1	14.067	17 A	20 A	1	3	#12	#12	3/4"	No	MC	EC	UNFUSED	30 A	3R	HP-01	
HP-02	PP1	8,10,12	HEAT PUMP	480	3	3	1	12.309	15 A	20 A	1	3	#12	#12	3/4"	No	MC	EC	UNFUSED	30 A	3R	HP-02	
HP-03	PP2	8,10,12	HEAT PUMP	480	3	3	1	17.584	21 A	30 A	1	3	#10	#10	1"	No	MC	EC	UNFUSED	30 A	3R	HP-03	
IOP-1	RP2	6	INSTRUMENTATION PANEL	120	1	1	-	0.976	8 A	20 A	1	2	#12	#12	1"	No	MC	EC	UNFUSED	30 A	3R	IOP-1	
IOP-2	RP2	8	INSTRUMENTATION PANEL	120	1	1	-	1.444	12 A	20 A	1	2	#12	#12	1"	No	MC	EC	UNFUSED	30 A	3R	IOP-2	
IOP-3	RP2	9	INSTRUMENTATION PANEL	120	1	1	-	1.22	10 A	20 A	1	2	#12	#12	1"	No	MC	EC	UNFUSED	30 A	3R	IOP-3	
IOP-4	RP2	12	INSTRUMENTATION PANEL	120	1	1	-	1.225	10 A	20 A	1	2	#12	#12	1"	No	MC	EC	UNFUSED	30 A	3R	IOP-4	
IOP-5	R9	3	INSTRUMENTATION PANEL	120	1	1	-	1.016	8 A	20 A	1	2	#12	#12	1"	No	MC	EC	UNFUSED	30 A	3R	IOP-5	
IOP-6	R10A	1	INSTRUMENTATION PANEL	120	1	1	-	1.016	8 A	20 A	1	2	#12	#12	1"	No	MC	EC	UNFUSED	30 A	3R	IOP-6	
IRH-01	HP1	1,3,5	ELECTRIC INFRARED RADIANT UNIT HEATER	480	3	3	-	13.5	16 A	20 A	1	3	#10	#10	1"	No	MC	EC	UNFUSED	30 A	3R	IRH-01	
IRH-02	HP1	2,4,6	ELECTRIC INFRARED RADIANT UNIT HEATER	480	3	3	-	13.5	16 A	20 A	1	3	#10	#10	1"	No	MC	EC	UNFUSED	30 A	3R	IRH-02	
IRH-03	HP1	7,9,11	ELECTRIC INFRARED RADIANT UNIT HEATER	480	3	3	-	13.5	16 A	20 A	1	3	#10	#10	1"	No	MC	EC	UNFUSED	30 A	3R	IRH-03	
IRH-04	HP1	8,10,12	ELECTRIC INFRARED RADIANT UNIT HEATER	480	3	3	-	13.5	16 A	20 A	1	3	#10	#10	1"	No	MC	EC	UNFUSED	30 A	3R	IRH-04	
IRH-05	HP1	13,15,17	ELECTRIC INFRARED RADIANT UNIT HEATER	480	3	3	-	13.5	16 A	20 A	1	3	#10	#10	1"	No	MC	EC	UNFUSED	30 A	3R	IRH-05	
IRH-06	HP1	26,28,30	ELECTRIC INFRARED RADIANT UNIT HEATER	480	3	3	-	13.5	16 A	20 A	1	3	#10	#10	1"	No	MC	EC	UNFUSED	30 A	3R	IRH-06	
IRH-07	HP1	19,21,23	ELECTRIC INFRARED RADIANT UNIT HEATER	480	3	3	-	13.5	16 A	20 A	1	3	#10	#10	1"	No	MC	EC	UNFUSED	30 A	3R	IRH-07	
IRH-08	HP1	20,22,24	ELECTRIC INFRARED RADIANT UNIT HEATER	480	3	3	-	13.5	16 A	20 A	1	3	#10	#10	1"	No	MC	EC	UNFUSED	30 A	3R	IRH-08	
IRH-09	HP1	25,27,29	ELECTRIC INFRARED RADIANT UNIT HEATER	480	3	3	-	13.5	16 A	20 A	1	3	#10	#10	1"	No	MC	EC	UNFUSED	30 A	3R	IRH-09	
IRH-10	HP1	14,16,18	ELECTRIC INFRARED RADIANT UNIT HEATER	480	3	3	-	13.5	16 A	20 A	1	3	#10	#10	1"	No	MC	EC	UNFUSED	30 A	3R	IRH-10	
MAU-1	MCC-1	14	MAKE-UP AIR UNIT	480	3	3	-	40	48 A	60 A	1	2	#4	#6	1 1/2"	No	MC	EC	UNFUSED	60 A	3R	MAU-1	
MMF	RP2	10	INSTRUMENTATION PANEL	120	1	1	-	1.444	12 A	20 A	1	2	#12	#12	1"	No	MC	EC	UNFUSED	30 A	3R	MMF	
OH DOOR	PP1	2,4,6	OVER HEAD DOOR	480	3	3	-	0.746	1 A	20 A	1	3	#12	#12	3/4"	No	MC	EC	UNFUSED	30 A	3R	OH DOOR	
OH DOOR	PP1	2,4,6	OVER HEAD DOOR	480	3	3	-	0.746	1 A	20 A	1	3	#12	#12	3/4"	No	MC	EC	UNFUSED	30 A	3R	OH DOOR	
OH DOOR	PP1	2,4,6	OVER HEAD DOOR	480	3	3	-	0.746	1 A	20 A	1	3	#12	#12	3/4"	No	MC	EC	UNFUSED	30 A	3R	OH DOOR	
P-1	PP1	7,9,11	WATER PUMP	480	3	3	1	3.73	4 A	50 A	1	3	#6	#8	1 1/2"	No	MC	EC	UNFUSED	60 A	3R	P-1	
P-8	MCC-1	17	RECOVERY WELL PUMP 8	480	3	3	-	38.717	47 A	60 A	1	3	#6	#8	1 1/4"	No	MC	EC	UNFUSED	60 A	3R	P-8	
P-9	MCC-RW9	2	RECOVERY WELL PUMP 9	240	2	1	-	33.5	140 A	60 A	1	3	#6	#8	1 1/4"	No	MC	EC	UNFUSED	60 A	3R	P-9	
P-10A	MCC-RW10A	2	RECOVERY WELL PUMP 10A	240	2	1	-	51.623	215 A	80 A	1	3	#6	#8	1 1/4"	No	MC	EC	UNFUSED	60 A	3R	P-10A	
P-100A	MCC-1	2	EQ PUMP	480	3	3	50	37.3	45 A	60 A	1	3	#1	#4	2"	No	MC	EC	UNFUSED	100 A	3R	P-100A	
P-100B	MCC-1	3	EQ PUMP	480	3	3	50	0	0 A	60 A	1	3	#1	#4	2"	No	MC	EC	UNFUSED	100 A	3R	P-100B	
P-400A	MCC-1	8	LGAC PUMP	480	3	3	25	18.65	22 A	25 A	1	3	#10	#12	1"	No	MC	EC	UNFUSED	30 A	3R	P-400A	
P-400B	MCC-1	10	LGAC PUMP	480	3	3	25	0	0 A	25 A	1	3	#10	#12	1"	No	MC	EC	UNFUSED	30 A	3R	P-400B	
P-500A	MCC-1	6	BWS PUMP	480	3	3	20	18.65	22 A	25 A	1	3	#10	#12	1"	No	MC	EC	UNFUSED	30 A	3R	P-500A	
P-500B	MCC-1	7	BWS PUMP	480	3	3	20	0	0 A	25 A	1	3	#10	#12	1"	No	MC	EC	UNFUSED	30 A	3R	P-500B	
P-800A	HP2	37,39,41	SUMP PUMP	480	3	3	5	4.663	6 A	20 A	1	3	#12	#12	3/4"	No	MC	EC	UNFUSED	30 A	3R	P-800A	
P-800B	HP2	31,33,35	SUMP PUMP	480	3	3	5	0	0 A	20 A	1	3	#12	#12	3/4"	No	MC	EC	UNFUSED	30 A	3R	P-800B	
P-910A	RP2	13	CAUSTIC METERING PUMP	120	1	1	1	0.1	1 A	20 A	1	2	#12	#12	3/4"	No	MC	EC	UNFUSED	30 A	3R	P-910A	
P-910B	RP2	13	CAUSTIC METERING PUMP	120	1	1	1	0.1	1 A	20 A	1	2	#12	#12	3/4"	No	MC	EC	UNFUSED	30 A	3R	P-910B	
P-911	RP1	19	SUMP PUMP	120	1	1	-	0.5	4 A	20 A	1	2	#12	#12	3/4"	No	MC	EC	UNFUSED	30 A	3R	P-911	
P-920A	RP2	15	HYPO METERING PUMP	120	1	1	1	0.1	1 A	20 A	1	2	#12	#12	3/4"	No	MC	EC	UNFUSED	30 A	3R	P-920A	
P-920B	RP2	15	HYPO METERING PUMP	120	1	1	1	0.1	1 A	20 A	1	2	#12	#12	3/4"	No	MC	EC	UNFUSED	30 A	3R	P-920B	
P-921	RP1	19	SUMP PUMP	120	1	1	-	0.5	4 A	20 A	1	2	#12	#12	3/4"	No	MC	EC	UNFUSED	30 A	3R	P-921	
P-930A	RP2	17	H202 METERING PUMP	120	1	1	1	0.1	1 A	20 A	1	2	#12	#12	3/4"	No	MC	EC	UNFUSED	30 A	3R	P-930A	
P-930B	RP2	17	H202 METERING PUMP	120	1	1	1	0.1	1 A	20 A	1	2	#12	#12	3/4"	No	MC	EC	UNFUSED	30 A	3R	P-930B	
P-931	RP1	19	SUMP PUMP	120	1	1	-	0.5	4 A	20 A	1	2	#12	#12	3/4"	No	MC	EC	UNFUSED	30 A	3R	P-931	
T-650	PP1	14,16,18	PSA GENERATOR	480	3	3	-	31.25	38 A	40 A	1	3	#6	#8	1 1/4"	No	MC	EC	UNFUSED	60 A	3R	T-650	
T-700	MCC-1	16	OZONE GENERATOR	480	3	3	-	24.6	30 A	40 A	1	3	#6	#8	1 1/4"	No	MC	EC	UNFUSED	60 A	3R	T-700	
T-740	MCC-1	13	CHILLER	480	3	3	-	12.84	15 A	20 A	1	3	#10	#10	1"	No	MC	EC	UNFUSED	30 A	3R	T-740	
MECHANICAL: 84																							

ISSUED FOR BID FEBRUARY 2026

CAUTION:IF SHEET IS LESS THAN 34"x22" USE GRAPHIC SCALE

THIS DRAWING PRODUCED ON AUTOCAD DO NOT REVISE MANUALLY

"THIS DOCUMENT IS THE PROPERTY OF NAVAL FACILITIES ENGINEERING COMMAND, PREPARED BY TETRA TECH ENGINEERING CORPORATION PC, AND IS PROVIDED UPON THE CONDITION THAT IT WILL NOT BE REPRODUCED, COPIED, OR ISSUED TO A THIRD PARTY, AND WILL BE USED SOLELY FOR THE ORIGINAL INTENDED PURPOSE AND SOLELY FOR THE EXECUTION OR REVIEW OF THE ENGINEERING CONSTRUCTION OF THE PROJECT".

IT IS A VIOLATION OF THE NEW YORK STATE EDUCATION LAW, ARTICLE 145, FOR ANY PERSON, UNLESS UNDER THE DIRECTION OF A NEW YORK STATE LICENSED PROFESSIONAL ENGINEER, TO ALTER AN ITEM ON THIS DOCUMENT IN ANY WAY.

SYM	DESCRIPTION	DATE	APPR

NAVFAC

STATE OF NEW YORK · JOSEPH K. HOOVER · LICENSED PROFESSIONAL ENGINEER · SEAL

TETRA TECH
www.tetratech.com
4403 CORPORATION LANE, SUITE 300
VIRGINIA BEACH, VA 23462
PHONE: (757) 461-3768 FAX: (757) 461-4148
AE INFO

APPROVED
FOR COMMANDER NAVFAC 4/24/2026

ACTIVITY
As per document from Nicole Coward, NAVFAC MIDLANT PLL/EV3

SATISFACTORY TO DATE 4/24/2026

DES. JKH/RLH DRW RLH CHK JKH

PM/EM
BRANCH MANAGER
CHIEF ENG/ARCH
FIRE PROTECTION

DEPARTMENT OF THE NAVY
NAVAL FACILITIES ENGINEERING SYSTEMS COMMAND
NAVAL FACILITIES ENGINEERING SYSTEMS COMMAND – MID-ATLANTIC
NAVAL STATION - NORFOLK, VA
NAVAL WEAPONS INDUSTRIAL RESERVE PLANT
BETHPAGE, NEW YORK
PHASE III - GROUNDWATER TREATMENT PLANT
ELECTRICAL SCHEDULES

SCALE: AS NOTED
EPROJECT NO.:
CONSTR. CONTR. NO.
NAVFAC DRAWING NO.
SHEET OF
E-606

DRAWFORM REVISION: 28 AUGUST 2008

4/20/2026 11:54:24 AM E-606
Autodesk Docs://1120380905 WE24 Navy Bethpage NY-Phase III-E-1120380905_PHASEIII_GWTP_v2023.rvt

NOTIFICATION: THIS PAGE CONTAINS SENSITIVE BUT UNCLASSIFIED INFORMATION WHICH IS PROTECTED BY THE FREEDOM OF INFORMATION ACT

EXEMPTION 3. (5 USC 552(b)(3))

Information exempted by other statutes

10 USC Section 130(e) Treatment of Certain Critical Infrastructure Security Information

Page 180

TO REQUEST A COPY OF THE DOCUMENT PLEASE CONTACT

Department of the Navy
Freedom of Information Act Office

http://www.secnav.navy.mil/foia/Pages/default.aspx

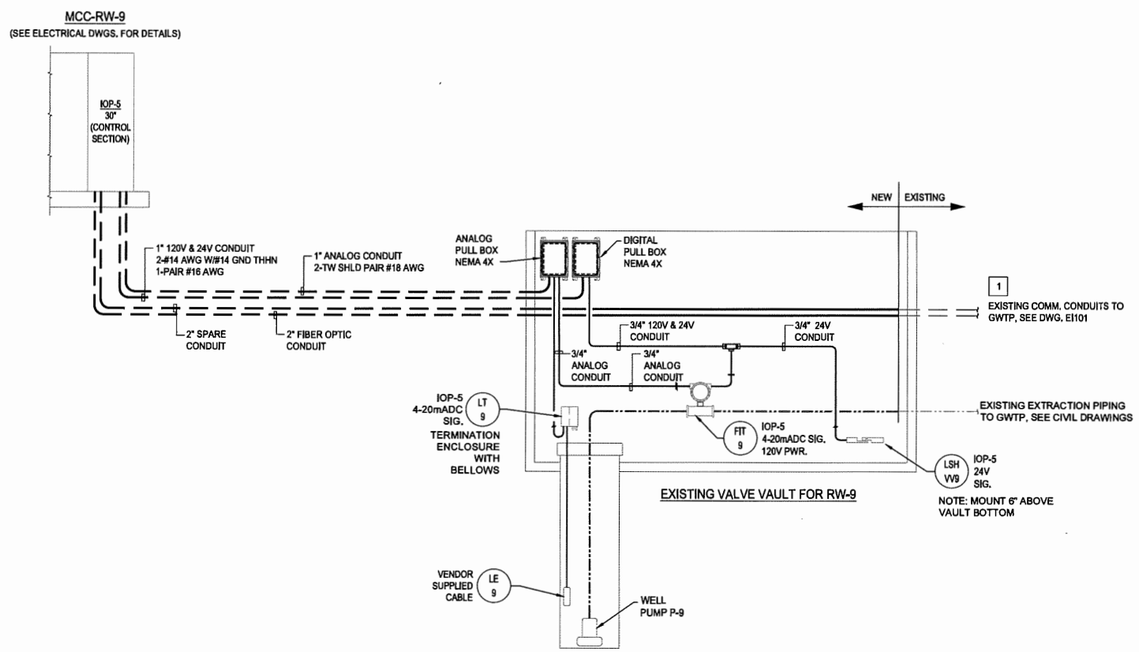

RW-9 CONDUIT BLOCK DIAGRAM

N.T.S.

GENERAL NOTES:

1. INSTALLATION OF ALL ELECTRICAL WORK SHALL CONFORM TO THE LATEST EDITION OF THE NATIONAL ELECTRICAL CODE (NFPA 70), AND ALL APPLICABLE LOCAL CODES.
2. DRAWINGS ARE DIAGRAMMATIC, ACTUAL LOCATION OF EQUIPMENT TO BE DETERMIND IN THE FIELD.
3. CONDUIT RUNS ARE SHOWN DIAGRAMMATICALLY ONLY AND SHALL BE INSTALLED IN A MANNER TO PREVENT CONFLICTS WITH EQUIPMENT AND STRUCTURAL CONDITIONS.
4. PROVIDE ALL REQUIRED PULL BOXES AND JUNCTION BOXES FOR INSTALLATION OF THE WIRING IN ACCORDANCE WITH THE CONTRACT SPECIFICATIONS THOUGH BOXES MAY NOT BE INDICATED ON THE DRAWINGS.
5. ALL JUNCTION AND PULL BOXES SHALL BE LABELED WITH THEIR VOLTAGE AND USAGE.
6. PROVIDE ALL NECESSARY COMPONENTS REQUIRED FOR MAKING FINAL CONNECTION OF ALL EQUIPMENT INSTALLED AS PART OF THIS CONTRACT.
7. ALL EQUIPMENT IS NEW UNLESS SPECIFICALLY NOTED OTHERWISE (i.e EXISTING, EX, etc.)

SPECIFIC NOTES:

1 2 - 2" PVC COMMUNICATION CONDUITS PRE-INSTALLED FROM CURB LINE AT TWIN LANE NORTH (AT TREATMENT PLANT) TO RW-9 VALVE VAULT. CONTRACTOR SHALL EXTEND CONDUITS TO MCC-RW-9 AND INSTALL FIBER OPTIC CABLE, SEE DWGS. EI101 AND TN601. SEE CIVIL DRAWINGS FOR LOCATIONS OF RECOVERY WELLS, MANHOLES, CONDUIT ROUTINGS, AND DISTANCES FOR CABLE PULLING.

REFERENCE DRAWINGS:

EI101	GWTP INSTRUMENT LOCATION PLAN
EI650	IOP-5 PLC PANEL & I/O ELEMENTARIES
EI651	IOP-5 CONTROL SUB-PANEL LAYOUT & B.O.M
EI652	IOP-5 CONTROL PANEL TERMINAL DETAILS
EI653	IOP-5 CONTROL PANEL 120VAC POWER LADDER
EI654	IOP-5 CONTROL PANEL 24VDC POWER LADDER
EI655	IOP-5 CONTROL PANEL RACK 2 SLOTS 0 & 1 WIRING
TN601	CONTROL SYSTEM ARCHITECTURE

LEGEND:

IOP-X 120V SIG. 120V PWR. (INSTR. TAG) INSTRUMENT SIGNAL TO PLC LOCATION IS APPROXIMATE

EXISTING U.G. CONDUIT
NEW U.G. CONDUIT
EXISTING U.G. PIPE
NEW U.G. PIPE

CONTROL CABLE SPECIFICATIONS:

PAIRED CABLE; #16 AWG, SINGLE PAIR, UNSHIELDED, 300V, PLTC/ITC, 90 DEG. C PVC INSULATION, PVC JACKET UNLESS OTHERWISE NOTED.

PAIRED CABLE W/SHIELD; #18 AWG, SINGLE SHIELDED PAIR, 300V, PLTC/ITC, 90 DEG C PVC JACKET, OVERALL ALUMINUM-POLYESTER TAPE SHIELD (100% COVERAGE) WITH TINNED COPPER DRAIN WIRE UNLESS OTHERWISE NOTED.

SINGLE CONDUCTOR #14 AWG SINGLE CONDUCTOR, STRANDED (41x30) TINNED COPPER CONDUCTORS, 90 DEG C PVC INSULATION UNLESS OTHERWISE NOTED.

THIS DRAWING PRODUCED ON AUTOCAD
DO NOT REVISE MANUALLY

"THIS DOCUMENT IS THE PROPERTY OF NAVAL FACILITIES ENGINEERING COMMAND, PREPARED BY TETRA TECH ENGINEERING CORPORATION P.C. AND IS PROVIDED UPON THE CONDITION THAT IT WILL NOT BE REPRODUCED, COPIED, OR ISSUED TO A THIRD PARTY, AND WILL BE USED SOLELY FOR THE ORIGINAL INTENDED PURPOSE AND SOLELY FOR THE EXECUTION OR REVIEW OF THE ENGINEERING CONSTRUCTION OF THE PROJECT".

IT IS A VIOLATION OF THE NEW YORK STATE EDUCATION LAW, ARTICLE 145, FOR ANY PERSON, UNLESS UNDER THE DIRECTION OF A NEW YORK STATE LICENSED PROFESSIONAL ENGINEER, TO ALTER AN ITEM ON THIS DOCUMENT IN ANY WAY.

ISSUED FOR BID - FEBRUARY 2026

NAVFAC

STATE OF NEW YORK
LICENSED PROFESSIONAL ENGINEER
080336

TETRA TECH
www.tetratech.com
4433 CORPORATION LANE, SUITE 300
VIRGINIA BEACH, VA 23462
PHONE: (757) 461-3756 FAX: (757) 461-4148
A/E INFO

APPROVED
FOR COMMANDER NAVFAC
ACTIVITY
As per document from Nicole Cowand, NAVFAC MIDLANT PL1/EV3.
SATISFACTORY TO DATE 04/24/2026
DES JJK DRW JJK CHK WS
PM/DM
BRANCH MANAGER
CHIEF ENG/ARCH
FIRE PROTECTION

NAVAL FACILITIES ENGINEERING SYSTEMS COMMAND - MID - ATLANTIC
NAVAL INDUSTRIAL RESERVE ORDNANCE PLANT
RW09 NAVAL WEAPONS INDUSTRIAL RESERVE PLANT BETHPAGE, NEW YORK
PHASE III - TREATMENT PLANT
RW-9 CONDUIT BLOCK DIAGRAM

SCALE: AS NOTED
EPROJECT NO.: -
CONSTR. CONTR. NO.
NAVFAC DRAWING NO. ##
SHEET OF -
EI102

FILE NAME: Y:\03-Projects\Federal\NAVFAC\112026805_WE24_PHASE III GWTP_2023\3. Working Files\Drawings\NAVFAC\EI102.dwg LAYOUT NAME: EI102 PLOTTED: Tuesday, April 21, 2026 - 7:41am USER: Bill.Slonebroker

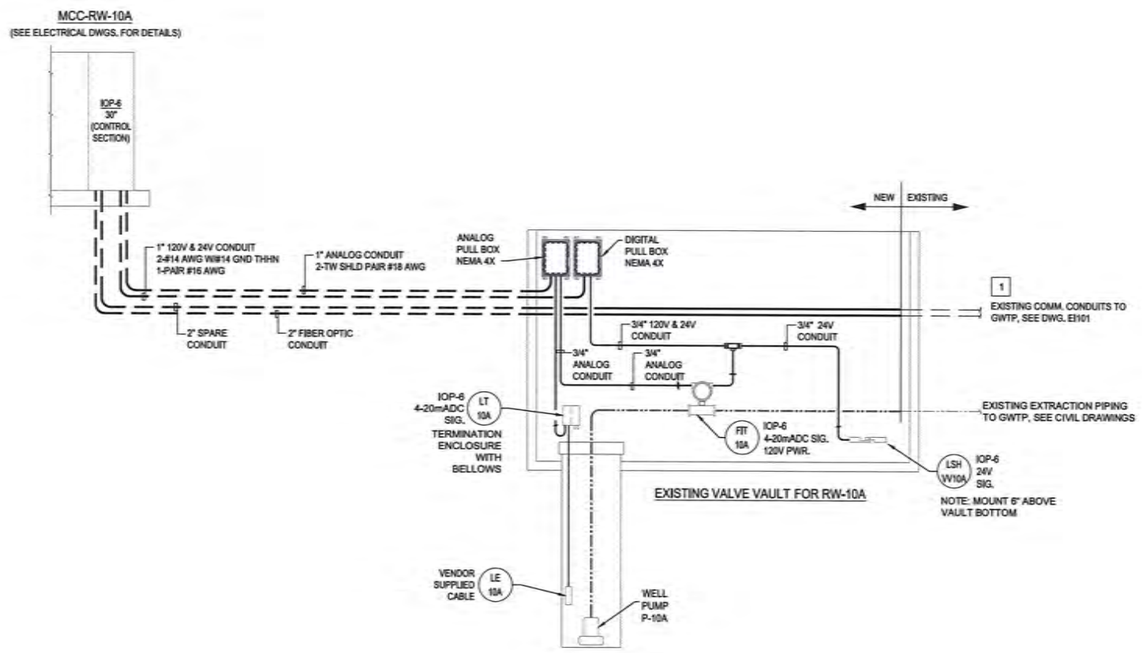

RW-10A CONDUIT BLOCK DIAGRAM

N.T.S.

GENERAL NOTES:

1. INSTALLATION OF ALL ELECTRICAL WORK SHALL CONFORM TO THE LATEST EDITION OF THE NATIONAL ELECTRICAL CODE (NFPA 70), AND ALL APPLICABLE LOCAL CODES.
2. DRAWINGS ARE DIAGRAMMATIC, ACTUAL LOCATION OF EQUIPMENT TO BE DETERMIND IN THE FIELD.
3. CONDUIT RUNS ARE SHOWN DIAGRAMMATICALLY ONLY AND SHALL BE INSTALLED IN A MANNER TO PREVENT CONFLICTS WITH EQUIPMENT AND STRUCTURAL CONDITIONS.
4. PROVIDE ALL REQUIRED PULL BOXES AND JUNCTION BOXES FOR INSTALLATION OF THE WIRING IN ACCORDANCE WITH THE CONTRACT SPECIFICATIONS THOUGH BOXES MAY NOT BE INDICATED ON THE DRAWINGS.
5. ALL JUNCTION AND PULL BOXES SHALL BE LABELED WITH THEIR VOLTAGE AND USAGE.
6. PROVIDE ALL NECESSARY COMPONENTS REQUIRED FOR MAKING FINAL CONNECTION OF ALL EQUIPMENT INSTALLED AS PART OF THIS CONTRACT.
7. ALL EQUIPMENT IS NEW UNLESS SPECIFICALLY NOTED OTHERWISE (i.e EXISTING, EX, etc.)

SPECIFIC NOTES:

1 2 - 2" PVC COMMUNICATION CONDUITS PRE-INSTALLED FROM CURB LINE AT TWIN LANE NORTH (AT TREATMENT PLANT) TO RW-10A VALVE VAULT. CONTRACTOR SHALL EXTEND CONDUITS TO MCC-RW-10A AND INSTALL FIBER OPTIC CABLE. SEE DWGS. EI101 AND TN601. SEE CIVIL DRAWINGS FOR LOCATIONS OF RECOVERY WELLS, MANHOLES, CONDUIT ROUTINGS, AND DISTANCES FOR CABLE PULLING.

REFERENCE DRAWINGS:

EI101	GWTP INSTRUMENT LOCATION PLAN
EI660	IOP-6 PLC PANEL & I/O ELEMENTARIES
EI661	IOP-6 CONTROL SUB-PANEL LAYOUT & B.O.M
EI662	IOP-6 CONTROL PANEL TERMINAL DETAILS
EI663	IOP-6 CONTROL PANEL 120VAC POWER LADDER
EI664	IOP-6 CONTROL PANEL 24VDC POWER LADDER
EI665	IOP-6 CONTROL PANEL RACK 2 SLOTS 0 & 1 WIRING
TN601	CONTROL SYSTEM ARCHITECTURE

LEGEND:

IOP-X 120V SIG. 120V PWR. (INSTR. TAG) INSTRUMENT SIGNAL TO PLC LOCATION IS APPROXIMATE

— — — — EXISTING U.G. CONDUIT
— — — — NEW U.G. CONDUIT
EXISTING U.G. PIPE
NEW U.G. PIPE

CONTROL CABLE SPECIFICATIONS:

PAIRED CABLE; #16 AWG, SINGLE PAIR, UNSHIELDED, 300V, PLTC/ITC, 90 DEG. C PVC INSULATION, PVC JACKET UNLESS OTHERWISE NOTED.

PAIRED CABLE W/SHIELD; #18 AWG, SINGLE SHIELDED PAIR, 300V, PLTC/ITC, 90 DEG C PVC JACKET, OVERALL ALUMINUM-POLYESTER TAPE SHIELD (100% COVERAGE) WITH TINNED COPPER DRAIN WIRE UNLESS OTHERWISE NOTED.

SINGLE CONDUCTOR #14 AWG SINGLE CONDUCTOR, STRANDED (41x30) TINNED COPPER CONDUCTORS, 90 DEG C PVC INSULATION UNLESS OTHERWISE NOTED.

THIS DRAWING PRODUCED ON AUTOCAD
DO NOT REVISE MANUALLY

"THIS DOCUMENT IS THE PROPERTY OF NAVAL FACILITIES ENGINEERING COMMAND, PREPARED BY TETRA TECH ENGINEERING CORPORATION PC, AND IS PROVIDED UPON THE CONDITION THAT IT WILL NOT BE REPRODUCED, COPIED, OR ISSUED TO A THIRD PARTY, AND WILL BE USED SOLELY FOR THE ORIGINAL INTENDED PURPOSE AND SOLELY FOR THE EXECUTION OR REVIEW OF THE ENGINEERING CONSTRUCTION OF THE PROJECT".

IT IS A VIOLATION OF THE NEW YORK STATE EDUCATION LAW, ARTICLE 145, FOR ANY PERSON, UNLESS UNDER THE DIRECTION OF A NEW YORK STATE LICENSED PROFESSIONAL ENGINEER, TO ALTER AN ITEM ON THIS DOCUMENT IN ANY WAY.

ISSUED FOR BID - FEBRUARY 2026

NAVFAC

TETRA TECH
www.tetratech.com
4433 CORPORATION LANE, SUITE 300
VIRGINIA BEACH, VA 23462
PHONE: (757) 490-2708 FAX: (757) 483-4148
A/E INFO

APPROVED
FOR COMMANDER NAVFAC
ACTION
As per document from Nicole Cowens, NAVFAC MIDLANT PLL/EV3.
SATISFACTORY TO DATE 04/24/2026

DES	DRW	CHK
JJK	JJK	WS

PM/DM
BRANCH MANAGER
CHIEF ENG/ARCH
FIRE PROTECTION

NAVAL FACILITIES ENGINEERING SYSTEMS COMMAND - MID - ATLANTIC
NAVAL INDUSTRIAL RESERVE ORDNANCE PLANT
NAVAL WEAPONS INDUSTRIAL RESERVE PLANT BETHPAGE, NEW YORK
PHASE III - TREATMENT PLANT
RW09
RW-10A CONDUIT BLOCK DIAGRAM

SCALE: AS NOTED
(PROJECT NO.): -
CONSTR. CONTR. NO.
NAVFAC DRAWING NO. ##
SHEET OF -
EI103

FILE NAME: Y:\03-Projects\Fedexp\WW\NC\112020005_MC24_PHASE III GWTP_2023\3. Working Files\Drawings\MCC\EI103.dwg LAYOUT NAME: EI103 PLOTTED: Tuesday, April 21, 2026 - 7:42am USER: Bill.Stonebraker

NOTIFICATION: THIS PAGE CONTAINS SENSITIVE BUT UNCLASSIFIED INFORMATION WHICH IS PROTECTED BY THE FREEDOM OF INFORMATION ACT

EXEMPTION 3. (5 USC 552(b)(3))

Information exempted by other statutes

10 USC Section 130(e) Treatment of Certain Critical Infrastructure Security Information

Pages 183-184

TO REQUEST A COPY OF THE DOCUMENT PLEASE CONTACT

Department of the Navy
Freedom of Information Act Office

http://www.secnav.navy.mil/foia/Pages/default.aspx

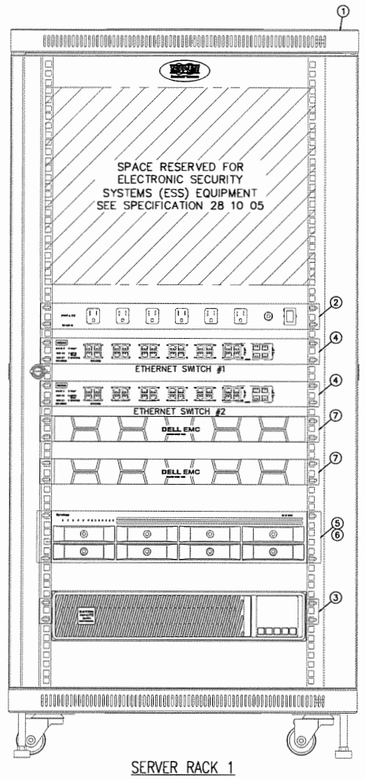

SERVER RACK 1
SCALE: 3" = 1'-0"
LOACTED IN CONTROL ROOM

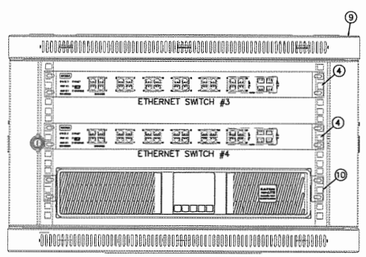

SERVER RACK 2
SCALE: 3" = 1'-0"
LOACTED IN OFFICE

PANEL BILL OF MATERIAL

ITEM	QUAN	DESCRIPTION	SUPPLIER
1	1	TRIPP LITE SERVER RACK WITH WHEELS 49.19"H x 23.62"W x 34.50"D TRIP LITE CAT. NO. 24U (OR EQUAL)	PANEL SHOP
2	1	TRIPP LITE 12 OUTLET POWER STRIP TRIP LITE CAT. NO. RS-1215-RA (OR EQUAL)	PANEL SHOP
3	1	TRIPP LITE 1500VA UPS TRIP LITE CAT. NO. SMART1500RM2U (OR EQUAL)	PANEL SHOP
4	4	MOXA LAYER 2 ETHERNET SWITCH MOXA CAT. NO. IKS-G6524A-4GTXSFP-HV-HV (OR EQUAL)	PANEL SHOP
5	1	SYNOLOGY 8 BAY RACK STATION (DISKLESS) SYNOLOGY CAT. NO. RS1221RP (OR EQUAL)	PANEL SHOP
6	4	SEAGATE IRONWOLF PRO 16 TB NAS INTERNAL HARD DRIVE FOR RAID 5 BACK-UP SEAGATE CAT. NO. HDD ST16000NE000 (OR EQUAL)	PANEL SHOP
7	2	DELL POWEREDGE R650 RACK MOUNTED SERVER MICROSOFT WINDOWS SERVER 2022 REQUIRED FOR EACH VIRTUAL MACHINE QTY 1. VMW SOFTWARE VSPHERE ESSENTIALS PLUS SOFTWARE (OR EQUAL)	PANEL SHOP
8 NOT SHOWN	2	ONLOGIC HELIX 310 ELKHART LAKE PC'S ENGINEERING & OPERATOR WORKSTATIONS (OR EQUAL) INTEL PENTIUM J6424 PROCESSOR 16GB RAM 1 TB SATA SSD WINDOWS 10 / MICROSOFT QTY 2 WIRELESS KEYBOARD / MOUSE QTY 4 MONITORS FOR TWO WORKSTATIONS	PANEL SHOP
9	1	TRIPP LITE SMART RACK WALL-MOUNT ENCLOSURE 14.5"H x 23.63"W x 17.5"D TRIP LITE CAT. NO. SRW6U	PANEL SHOP
10	1	TRIPP LITE 750VA UPS TRIP LITE CAT. NO. SU750RTXLCD2UN	PANEL SHOP

REFERENCE DRAWINGS:

EI610	IOP-1 LAYOUT PANEL & B.O.M
EI611	IOP-1 CONTROL SUB-PANEL LAYOUT & B.O.M
EI612	IOP-1 CONTROL PANEL TERMINAL DETAILS
EI613	IOP-1 CONTROL PANEL 120VAC POWER LADDER
EI614	IOP-1 CONTROL PANEL 24VDC POWER LADDER
EI615	IOP-1 CONTROL PANEL RACK 2 SLOTS 0 & 1 WIRING
EI616	IOP-1 CONTROL PANEL RACK 2 SLOTS 2 & 3 WIRING
EI617	IOP-1 CONTROL PANEL RACK 2 SLOTS 4 & 5 WIRING
EI618	IOP-1 CONTROL PANEL RACK 3 SLOTS 0 & 1 WIRING
EI619	IOP-1 CONTROL PANEL RACK 3 SLOTS 2 & 3 WIRING
TN601	CONTROL SYSTEM ARCHITECTURE

THIS DRAWING PRODUCED ON AUTOCAD
DO NOT REVISE MANUALLY

"THIS DOCUMENT IS THE PROPERTY OF NAVAL FACILITIES ENGINEERING COMMAND, PREPARED BY TETRA TECH ENGINEERING CORPORATION PC, AND IS PROVIDED UPON THE CONDITION THAT IT WILL NOT BE REPRODUCED, COPIED, OR ISSUED TO A THIRD PARTY, AND WILL BE USED SOLELY FOR THE ORIGINAL INTENDED PURPOSE AND SOLELY FOR THE EXECUTION OR REVIEW OF THE ENGINEERING CONSTRUCTION OF THE PROJECT".

IT IS A VIOLATION OF THE NEW YORK STATE EDUCATION LAW, ARTICLE 145, FOR ANY PERSON, UNLESS UNDER THE DIRECTION OF A NEW YORK STATE LICENSED PROFESSIONAL ENGINEER, TO ALTER AN ITEM ON THIS DOCUMENT IN ANY WAY.

ISSUED FOR BID - FEBRUARY 2026

NAVFAC

STATE OF NEW YORK
LICENSED PROFESSIONAL ENGINEER
080336
4/24/26

TETRA TECH
www.tetratech.com
4433 CORPORATION LANE, SUITE 300
VIRGINIA BEACH, VA 23462
PHONE: (757) 461-3766 FAX: (757) 461-4148
A/E INFO

APPROVED
FOR COMMANDER NAVFAC
ACTIVITY
As per document from Nicole Cowand, NAVFAC MIDLANT PLL/EV3.
SATISFACTORY TO DATE 04/24/2026
DES JJK DRW JJK CHK WS
PM/DM
BRANCH MANAGER
CHIEF ENG/ARCH
FIRE PROTECTION

NAVAL FACILITIES ENGINEERING SYSTEMS COMMAND - MID - ATLANTIC
NAVAL INDUSTRIAL RESERVE ORDNANCE PLANT
RW09
NAVAL WEAPONS INDUSTRIAL RESERVE PLANT BETHPAGE, NEW YORK
PHASE III - TREATMENT PLANT
SERVER RACKS 1 & 2 LAYOUT & BILL OF MATERIAL

SCALE: AS NOTED
EPROJECT NO.: -
CONSTR. CONTR. NO.
NAVFAC DRAWING NO. ##
SHEET OF -
EI601

FILE NAME: Y:\03-Projects\Federal\NAVFAC\112008005_WE24_PHASE III GWTP_2023\3. Working Files\Drawings\dwg\EI601.dwg LAYOUT NAME: EI601 PLOTTED: Tuesday, April 21, 2026 - 7:46am USER: BILSlonebroker

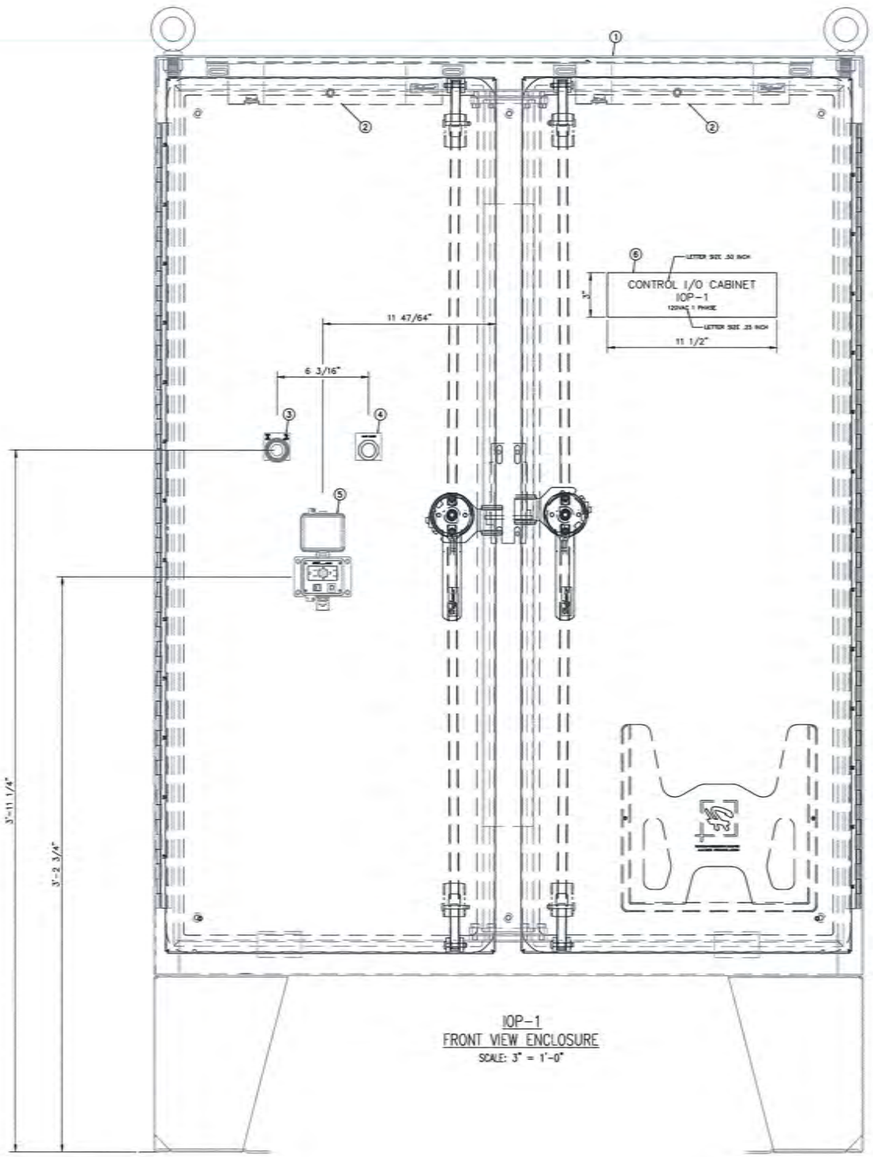

IOP-1
FRONT VIEW ENCLOSURE
SCALE: 3" = 1'-0"

PANEL BILL OF MATERIAL

ITEM	QUAN	DESCRIPTION	SUPPLIER
1	1	FREE STANDING ENCLOSURE WITH 3 POINT LATCHES & FLOOR STANDS 62"H x 48"W x 12"D, NEMA 4X HOFFMAN CAT. NO. A62H4812SSLP3PT (OR EQUAL)	PANEL SHOP
2	2	ENCLOSURE FLUORESCENT LIGHT 120VAC HOFFMAN CAT. NO. LF120V15 (OR EQUAL) POWER CORD WITH LEADS, HOFFMAN CAT. NO. LP72 (OR EQUAL) DOOR SWITCH (2) HOFFMAN CAT. NO. PLFSWD (OR EQUAL)	PANEL SHOP
3	1	E-STOP PUSHBUTON PUSH PULL MAINTAINED, NON-ILLUMINATED, 1 N.C. CONTACT ALLEN-BRADLEY CAT. No. 800T-FX604 (OR EQUAL) LEGEND PLATE "PUSH TO STOP -PULL TO START" ALLEN BRADLEY CAT. No. 800H-W196 (OR EQUAL)	PANEL SHOP
4	1	PUSHBUTON, MOMENTARY CONTACT, W / BLACK CAP, 1 N.O. CONTACT ALLEN-BRADLEY CAT. No. 800T-A2D1 (OR EQUAL) CUSTOM LEGEND PLATE MARKED "ALARM SILENCE" ALLEN BRADLEY CAT. No. 800T-X559 (OR EQUAL)	PANEL SHOP
5	1	PANEL INTERFACE CONNECTOR GRACE PORT CAT. NO. P-R2-K3RF3 (OR EQUAL)	PANEL SHOP
6	AS REQ'D.	PHENOLIC NAMEPLATE 3"H x 11 1/2"W WHITE W/BLACK 1/2" HIGH LETTERS, & 1/4" HIGH LETTERS SEE NAMEPLATE SCHEDULE	PANEL SHOP

REFERENCE DRAWINGS:

EI610	IOP-1 LAYOUT PANEL & B.O.M
EI611	IOP-1 CONTROL SUB-PANEL LAYOUT & B.O.M
EI612	IOP-1 CONTROL PANEL TERMINAL DETAILS
EI613	IOP-1 CONTROL PANEL 120VAC POWER LADDER
EI614	IOP-1 CONTROL PANEL 24VDC POWER LADDER
EI615	IOP-1 CONTROL PANEL RACK 2 SLOTS 0 & 1 WIRING
EI616	IOP-1 CONTROL PANEL RACK 2 SLOTS 2 & 3 WIRING
EI617	IOP-1 CONTROL PANEL RACK 2 SLOTS 4 & 5 WIRING
EI618	IOP-1 CONTROL PANEL RACK 3 SLOTS 0 & 1 WIRING
EI619	IOP-1 CONTROL PANEL RACK 3 SLOTS 2 & 3 WIRING
TN601	CONTROL SYSTEM ARCHITECTURE

THIS DRAWING PRODUCED ON AUTOCAD
DO NOT REVISE MANUALLY

"THIS DOCUMENT IS THE PROPERTY OF NAVAL FACILITIES ENGINEERING COMMAND, PREPARED BY TETRA TECH ENGINEERING CORPORATION PC, AND IS PROVIDED UPON THE CONDITION THAT IT WILL NOT BE REPRODUCED, COPIED, OR ISSUED TO A THIRD PARTY, AND WILL BE USED SOLELY FOR THE ORIGINAL INTENDED PURPOSE AND SOLELY FOR THE EXECUTION OR REVIEW OF THE ENGINEERING CONSTRUCTION OF THE PROJECT".

IT IS A VIOLATION OF THE NEW YORK STATE EDUCATION LAW, ARTICLE 145, FOR ANY PERSON, UNLESS UNDER THE DIRECTION OF A NEW YORK STATE LICENSED PROFESSIONAL ENGINEER, TO ALTER AN ITEM ON THIS DOCUMENT IN ANY WAY.

ISSUED FOR BID - FEBRUARY 2026

NAVFAC

STATE OF NEW YORK
LICENSED PROFESSIONAL ENGINEER
4/23/26

TETRA TECH
www.tetratech.com
4433 CORPORATION LANE, SUITE 300
VIRGINIA BEACH, VA 23462
PHONE: (757) 461-3768 FAX: (757) 461-4148
A/E NO

APPROVED
FOR COMMANDER NAVFAC 4/30/2026

ACTIVITY
As per document from Nicole Cowana, NAVFAC 'MIDLANT PLL/DV3.

SATISFACTORY TO DATE 04/24/2026

DES JJK | DRW JJK | CHK WS
PM/DM
BRANCH MANAGER
CHIEF ENG/ARCH
FIRE PROTECTION

NAVAL FACILITIES ENGINEERING SYSTEMS COMMAND - MID - ATLANTIC
PWD9 NAVAL WEAPONS INDUSTRIAL RESERVE PLANT BETHPAGE, NEW YORK
NAVAL INDUSTRIAL RESERVE ORDNANCE PLANT
PHASE III - TREATMENT PLANT
IOP-1 CONTROL PANEL LAYOUT & BILL OF MATERIAL

SCALE: AS NOTED
CPROJECT NO.:
CONSTR. CONTR. NO.
NAVFAC DRAWING NO.
SHEET OF
EI610

FILE NAME: Y:\D3-Projects\Federal\NAVFAC\112008005_WE24_PHASE III GWTP_2023\3. Working Files\Drawings\IAC\EI610 - EI612.dwg LAYOUT NAME: EI610 PLOTTED: Tuesday, April 21, 2026 - 7:48am USER: Bill Stonebraker

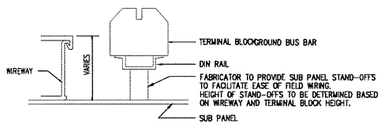

NAMEPLATE SCHEDULE

ITEM	MK NO.	LINE 1	LINE 2
A	46	TBAC	
B	46	TBDC	
C	47	RACK R0	
D	47	RACK R1	
E	45	R1S0	
F	45	R1S1	
G	45	R1S2	
H	45	R1S3	
J	45	R1S4	

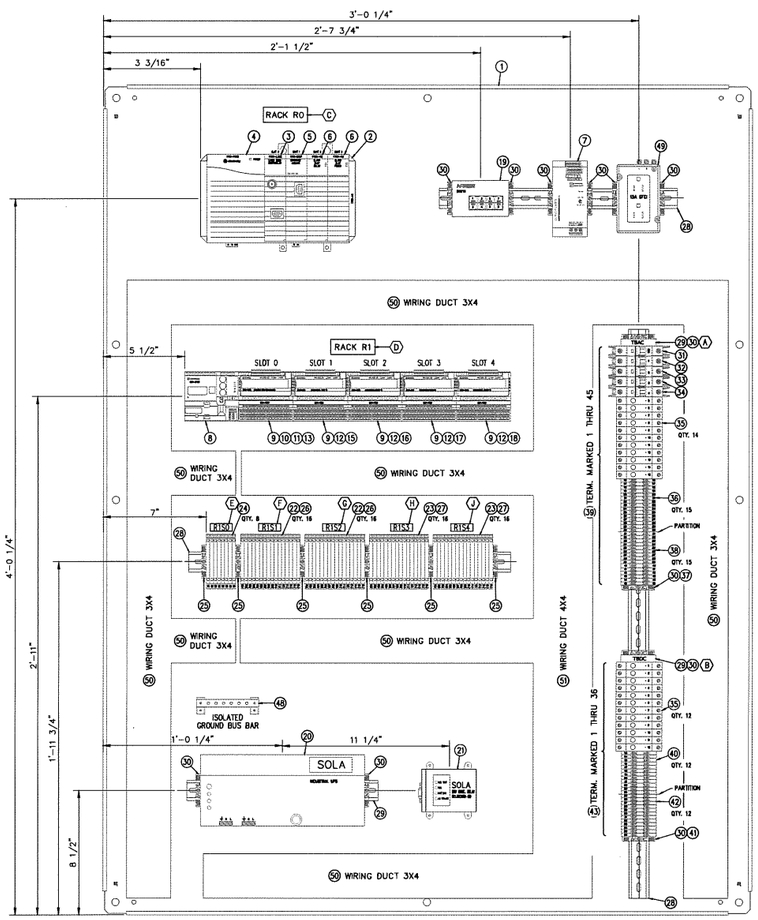

IOP-1
SUBPANEL ARRANGEMENT
SCALE: 3" = 1'-0"

SUB-PANEL BILL OF MATERIAL

ITEM	QUAN	DESCRIPTION	SUPPLIER
28	AS REQ'D.	TS 35 x 7.5 mm SLOTTED STEEL DIN RAIL (ALUMINUM NOT ACCEPTED) ALLEN BRADLEY CAT. NO. 1492-EAHJ35 (OR EQUAL)	PANEL SHOP
29	2	GROUP MARKER ALLEN BRADLEY CAT. NO. 1492-GM35 (OR EQUAL)	PANEL SHOP
30	12	END ANCHOR ALLEN BRADLEY CAT. NO. 1492-ERL35 (OR EQUAL)	PANEL SHOP
31	1	20 AMP CIRCUIT BREAKER 1 POLE ALLEN BRADLEY CAT. NO. 1489-A1C200 (OR EQUAL)	PANEL SHOP
32	1	15 AMP CIRCUIT BREAKER 1 POLE ALLEN BRADLEY CAT. NO. 1489-A1C150 (OR EQUAL)	PANEL SHOP
33	1	10 AMP CIRCUIT BREAKER 1 POLE ALLEN BRADLEY CAT. NO. 1489-A1C100 (OR EQUAL)	PANEL SHOP
34	2	5 AMP CIRCUIT BREAKER 1 POLE ALLEN BRADLEY CAT. NO. 1489-A1C050 (OR EQUAL)	PANEL SHOP
35	27	2 AMP CIRCUIT BREAKER 1 POLE ALLEN BRADLEY CAT. NO. 1492-GH020 (OR EQUAL)	PANEL SHOP
36	15	FEED THROUGH TERMINAL 600V ALLEN BRADLEY CAT. NO. 1492-J4BL (OR EQUAL)	PANEL SHOP
37	2	PARTITION PLATE ALLEN BRADLEY CAT. NO. 1492-EBJ16 (OR EQUAL)	PANEL SHOP
38	15	GROUND BLOCK TERMINAL 600V ALLEN BRADLEY CAT. NO. 1492 (OR EQUAL)	PANEL SHOP
39	AS REQ'D.	MARKING SYSTEM (FOR 600V TERMINALS ALLEN BRADLEY CAT. NO. 1492-MR6X12 (OR EQUAL)	PANEL SHOP
40	12	FEED THROUGH TERMINAL 300V ALLEN BRADLEY CAT. NO. 1492-WM4 (OR EQUAL)	PANEL SHOP
41	2	PARTITION PLATE ALLEN BRADLEY CAT. NO. 1492-PPM3 (OR EQUAL)	PANEL SHOP
42	12	GROUNDING TERMINAL 300V ALLEN BRADLEY CAT. NO. 1492-JG3	PANEL SHOP
43	AS REQ'D.	MARKING SYSTEM (FOR 300V TERMINALS) ALLEN BRADLEY CAT. NO. 1492-MR6X9 (OR EQUAL)	PANEL SHOP
44	N/A	RELAY MODULE; NOMINAL INPUT VOLTAGE: 24 VDC; 1 CHANGEOVER CONTACT; LIMITING CONTINUOUS CURRENT: 16 A; WITH MAN. OPER.; RED STATUS INDICATOR WAGO 788-341 (OR EQUAL)	PANEL SHOP
45	AS REQ'D.	PHENOLIC NAMEPLATE 1/2"H x 1 1/2"W WHITE W/BLACK 1/4" HIGH LETTERS, SEE NAMEPLATE SCHEDULE	PANEL SHOP
46	AS REQ'D.	PHENOLIC NAMEPLATE 3/4"H x 2"W WHITE W/BLACK 3/8" HIGH LETTERS, SEE NAMEPLATE SCHEDULE	PANEL SHOP
47	AS REQ'D.	PHENOLIC NAMEPLATE 1"H x 3"W WHITE W/BLACK 3/8" HIGH LETTERS, SEE NAMEPLATE SCHEDULE	PANEL SHOP
48	1	ISOLATED GROUND BAR SYSTEM, 200mm, HOFFMAN CAT NO. X-GS2K (OR EQUAL)	PANEL SHOP
49	1	RECEPTACLE 15A GFCI DIN RAIL MOUNTED WEIDMULLER CAT. NO. 6720005422 (OR EQUAL)	PANEL SHOP
50	AS REQ'D.	SLOTTED WIRE DUCT 3"W x 4"H / WITH COVER PANDUIT	PANEL SHOP
51	AS REQ'D.	SLOTTED WIRE DUCT 4"W x 4"H / WITH COVER PANDUIT	PANEL SHOP

SUB-PANEL BILL OF MATERIAL

ITEM	QUAN	DESCRIPTION	SUPPLIER
1	1	SUB-PANEL 56"H x 44"W, HOFFMAN CAT. NO. A60P48 (OR EQUAL)	PANEL SHOP
2	1	CONTROL LOGIX 4 SLOT RACK ALLEN BRADLEY CAT. NO. 1756-A4	PANEL SHOP
3	1	CONTROL LOGIX ETHERNET PROCESSOR 2MB MEMORY ALLEN BRADLEY CAT. NO. 1756-L82E	PANEL SHOP
4	1	120/240VAC POWER SUPPLY ALLEN BRADLEY CAT. NO. 1756-PA72	PANEL SHOP
5	1	ETHERNET MODULE ALLEN BRADLEY CAT. NO. 1756-EN2F	PANEL SHOP
6	2	BLANK SLOT FILLER ALLEN BRADLEY CAT. NO. 1756-N2	PANEL SHOP
7	1	POWER SUPPLY QUINT PS/1AC/24DC/10A, DC OK ACTIVE PHEONIX CONTACT CAT. NO. 286673	PANEL SHOP
8	1	FLEX 5000 I/O, ETHERNET ADAPTER ALLEN BRADLEY CAT. NO. 5094-AENTR	PANEL SHOP
9	4	FLEX 5000 I/O, MOUNTING BASE ALLEN BRADLEY CAT. NO. 5094-MB	PANEL SHOP
10	1	FLEX 5000 I/O, SHIELD BAR ALLEN BRADLEY CAT. NO. 5094-STB	PANEL SHOP
11	1	FLEX 5000 I/O, TERMINAL BASE FOR 5094-IF8IH ALLEN BRADLEY CAT. NO. 5094-RTB3I	PANEL SHOP
12	4	FLEX 5000 I/O, REMOVABLE TERMINAL BASE FOR 5094-IB16, 5094-OB16, 5094-IA16, 5094-OA16 ALLEN BRADLEY CAT. NO. 5094-RTB3	PANEL SHOP
13	1	FLEX 5000 I/O, ANALOG 8 INPUT ISOLATED HART MODULE ALLEN BRADLEY CAT. NO. 5094-IF8IH	PANEL SHOP
14	N/A	FLEX 5000 I/O, ANALOG 8 OUTPUT MODULE ALLEN BRADLEY CAT. NO. 5094-OF8	PANEL SHOP
15	1	FLEX 5000 I/O, 24VDC 16 DIGITAL INPUT MODULE ALLEN BRADLEY CAT. NO. 5094-IB16	PANEL SHOP
16	1	FLEX 5000 I/O, 24VDC 16 DIGITAL OUTPUT MODULE ALLEN BRADLEY CAT. NO. 5094-OB16	PANEL SHOP
17	1	FLEX 5000 I/O, 120VAC 16 DIGITAL INPUT MODULE ALLEN BRADLEY CAT. NO. 5094-IA16	PANEL SHOP
18	1	FLEX 5000 I/O, 120VAC 16 DIGITAL OUTPUT MODULE ALLEN BRADLEY CAT. NO. 5094-OA16	PANEL SHOP
19	1	FIBER TO ETHERNET SWITCH 8 RJ-45 COPPER PORTS NTRON CAT. NO. 508TX	PANEL SHOP
20	1	SOLA INDUSTRIAL UPS 120VAC, 60HZ, 500VA, 300W, 4 MINUTE BACK UP TIME SOLA CAT. NO. SDU-500	PANEL SHOP
21	1	SOLA FORM C DRY CONTACT SOLA CAT. NO. RELAYCARD-SDU	PANEL SHOP
22	32	UT 4-L/HESID 24 W/ BLOWN FUSE INDICATOR, 5 X 20 mm FUSE HOLDER FOR 5094-IB16 & 5094-OB16 PHOENIX CONTACT CAT. NO. 3214366	PANEL SHOP
23	32	UT 4-L/HESI W/ BLOWN FUSE INDICATOR, 5 X 20 mm FUSE HOLDER FOR 5094-IA16 & 5094-OA16 PHOENIX CONTACT CAT. NO. 3214325	PANEL SHOP
24	8	TRI LEVEL DISCONNECT TERMINAL BLOCK FOR 5094-IF8IH & 5094-OF8 PHOENIX CONTACT CAT. NO. 3214325	PANEL SHOP
25	6	END BRACKET FOR NS 35 MOUNTING RAIL TYPE E/UK 1 (DOUBLE/TRIPPLE/LEVEL TERM) PHOENIX CONTACT CAT. NO. 201413	PANEL SHOP
26	32	FUSE 5x20mm RATING 1/2 AMP 5mm x 20mm BUSSMAN GMA	PANEL SHOP
27	32	FUSE 5x20mm RATING 2 AMP 5mm x 20mm BUSSMAN GMA	PANEL SHOP

NOTES:

1. ALL TERMINAL BLOCKS TO BE NUMBERED WITH PREPRINTED LABELS.
2. ALL WIRING TO HAVE IMPRINTED SHRINK TUBING ID LABELS.
3. PANEL SHOP TO INSTALL STAND-OFFS UNDER DIN RAIL TO BRING TERMINALS FLUSH WITH TOP OF WIRING DUCT.

REFERENCE DRAWINGS:

EI610 IOP-1 LAYOUT PANEL & B.O.M
EI611 IOP-1 CONTROL SUB-PANEL LAYOUT & B.O.M
EI612 IOP-1 CONTROL PANEL TERMINAL DETAILS
EI613 IOP-1 CONTROL PANEL 120VAC POWER LADDER
EI614 IOP-1 CONTROL PANEL 24VDC POWER LADDER
EI615 IOP-1 CONTROL PANEL RACK 2 SLOTS 0 & 1 WIRING
EI616 IOP-1 CONTROL PANEL RACK 2 SLOTS 2 & 3 WIRING
EI617 IOP-1 CONTROL PANEL RACK 2 SLOTS 4 & 5 WIRING
EI618 IOP-1 CONTROL PANEL RACK 3 SLOTS 0 & 1 WIRING
EI619 IOP-1 CONTROL PANEL RACK 3 SLOTS 2 & 3 WIRING
TN601 CONTROL SYSTEM ARCHITECTURE

THIS DRAWING PRODUCED ON AUTOCAD
DO NOT REVISE MANUALLY

"THIS DOCUMENT IS THE PROPERTY OF NAVAL FACILITIES ENGINEERING COMMAND, PREPARED BY TETRA TECH ENGINEERING CORPORATION PC, AND IS PROVIDED UPON THE CONDITION THAT IT WILL NOT BE REPRODUCED, COPIED, OR ISSUED TO A THIRD PARTY, AND WILL BE USED SOLELY FOR THE ORIGINAL INTENDED PURPOSE AND SOLELY FOR THE EXECUTION OR REVIEW OF THE ENGINEERING CONSTRUCTION OF THE PROJECT".

IT IS A VIOLATION OF THE NEW YORK STATE EDUCATION LAW, ARTICLE 145, FOR ANY PERSON, UNLESS UNDER THE DIRECTION OF A NEW YORK STATE LICENSED PROFESSIONAL ENGINEER, TO ALTER AN ITEM ON THIS DOCUMENT IN ANY WAY.

ISSUED FOR BID - FEBRUARY 2026

NAVFAC

STATE OF NEW YORK
LICENSED PROFESSIONAL ENGINEER
080236
4/24/26

TETRA TECH
www.tetratech.com
4433 CORPORATION LANE, SUITE 300
VIRGINIA BEACH, VA 23462
PHONE: (757) 461-3768 FAX: (757) 461-4148

A/E W/O

APPROVED
FOR COMMANDER NAVFAC

ACTIVITY
As per document from Nicole Cowand, NAVFAC MIDLANT PLL/EV3

SATISFACTORY TO DATE 04/24/2026

DES	DRW	CHK
JJK	JJK	WS

PM/CM
BRANCH MANAGER
CHIEF ENG/ARCH
FIRE PROTECTION

NAVAL FACILITIES ENGINEERING SYSTEMS COMMAND - MID - ATLANTIC
NAVAL INDUSTRIAL RESERVE ORDNANCE PLANT
RN03
NAVAL WEAPONS INDUSTRIAL RESERVE PLANT BETHPAGE, NEW YORK
PHASE III - TREATMENT PLANT
IOP-1 SUB-PANEL LAYOUT & BILL OF MATERIAL

SCALE: AS NOTED
EPROJECT NO.:
CONSTR. CONTR. NO.
NAVFAC DRAWING NO. ##
SHEET OF
EI611

FILE NAME: Y:\03-Projects\Federal\NAVFAC\112008005_WE24_PHASE III GWTP_2023\3. Working Files\Drawings\Mac\EI610 - EI612.dwg LAYOUT NAME: EI611 PLOTTED: Tuesday, April 21, 2026 - 7:48am USER: Bill.Stonebroker

RACK R0

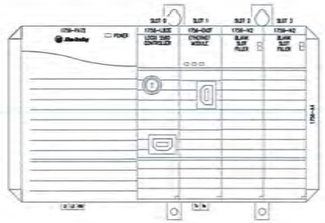

RACK R1

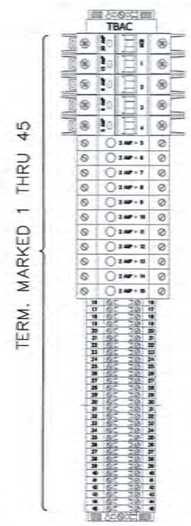

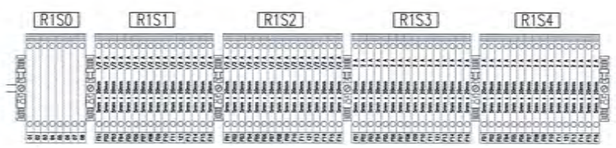

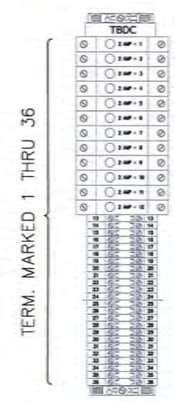

REFERENCE DRAWINGS:

EI610	IOP-1 LAYOUT PANEL & B.O.M
EI611	IOP-1 CONTROL SUB-PANEL LAYOUT & B.O.M
EI612	IOP-1 CONTROL PANEL TERMINAL DETAILS
EI613	IOP-1 CONTROL PANEL 120VAC POWER LADDER
EI614	IOP-1 CONTROL PANEL 24VDC POWER LADDER
EI615	IOP-1 CONTROL PANEL RACK 2 SLOTS 0 & 1 WIRING
EI616	IOP-1 CONTROL PANEL RACK 2 SLOTS 2 & 3 WIRING
EI617	IOP-1 CONTROL PANEL RACK 2 SLOTS 4 & 5 WIRING
EI618	IOP-1 CONTROL PANEL RACK 3 SLOTS 0 & 1 WIRING
EI619	IOP-1 CONTROL PANEL RACK 3 SLOTS 2 & 3 WIRING
TN601	CONTROL SYSTEM ARCHITECTURE

ISSUED FOR BID - FEBRUARY 2026

THIS DRAWING PRODUCED ON AUTOCAD
DO NOT REVISE MANUALLY

"THIS DOCUMENT IS THE PROPERTY OF NAVAL FACILITIES ENGINEERING COMMAND, PREPARED BY TETRA TECH ENGINEERING CORPORATION PC, AND IS PROVIDED UPON THE CONDITION THAT IT WILL NOT BE REPRODUCED, COPIED, OR ISSUED TO A THIRD PARTY, AND WILL BE USED SOLELY FOR THE ORIGINAL INTENDED PURPOSE AND SOLELY FOR THE EXECUTION OR REVIEW OF THE ENGINEERING CONSTRUCTION OF THE PROJECT".

IT IS A VIOLATION OF THE NEW YORK STATE EDUCATION LAW, ARTICLE 145, FOR ANY PERSON, UNLESS UNDER THE DIRECTION OF A NEW YORK STATE LICENSED PROFESSIONAL ENGINEER, TO ALTER AN ITEM ON THIS DOCUMENT IN ANY WAY.

NAVFAC

TETRA TECH
www.tetratech.com
4433 CORPORATION LANE, SUITE 300
VIRGINIA BEACH, VA 23462
PHONE: (757) 451-3788 FAX: (757) 451-4140
A/E INFO

APPROVED

FOR COMMANDER NAVFAC 4/30/2026

ACTIVITY
As per document from Nicole Cawana, NAVFAC MIDLANT PLL/EV3.

SATISFACTORY TO DATE 04/24/2026

DES JJK | DRW JJK | CHK WS

PM/DM

BRANCH MANAGER

CHIEF ENG/ARCH

FIRE PROTECTION

NAVAL FACILITIES ENGINEERING SYSTEMS COMMAND - MID - ATLANTIC
NAVAL INDUSTRIAL RESERVE ORDNANCE PLANT
NAVAL WEAPONS INDUSTRIAL RESERVE PLANT BETHPAGE, NEW YORK
PHASE III - TREATMENT PLANT
IOP-1 CONTROL TERMINAL DETAILS

SCALE: AS NOTED

EPROJECT NO.: -

CONSTR. CONTR. NO.

NAVFAC DRAWING NO.

SHEET OF -

EI612

FILE NAME: Y:\03-Projects\Federal\NAVFAC\112G08000_WK24_PHASE III GWTP_2023\3. Working Files\Drawings\IAC\EI610 - EI612.dwg LAYOUT NAME: EI612 PLOTTED: Tuesday, April 21, 2026 - 7:49am USER: Bill.Stonebraker

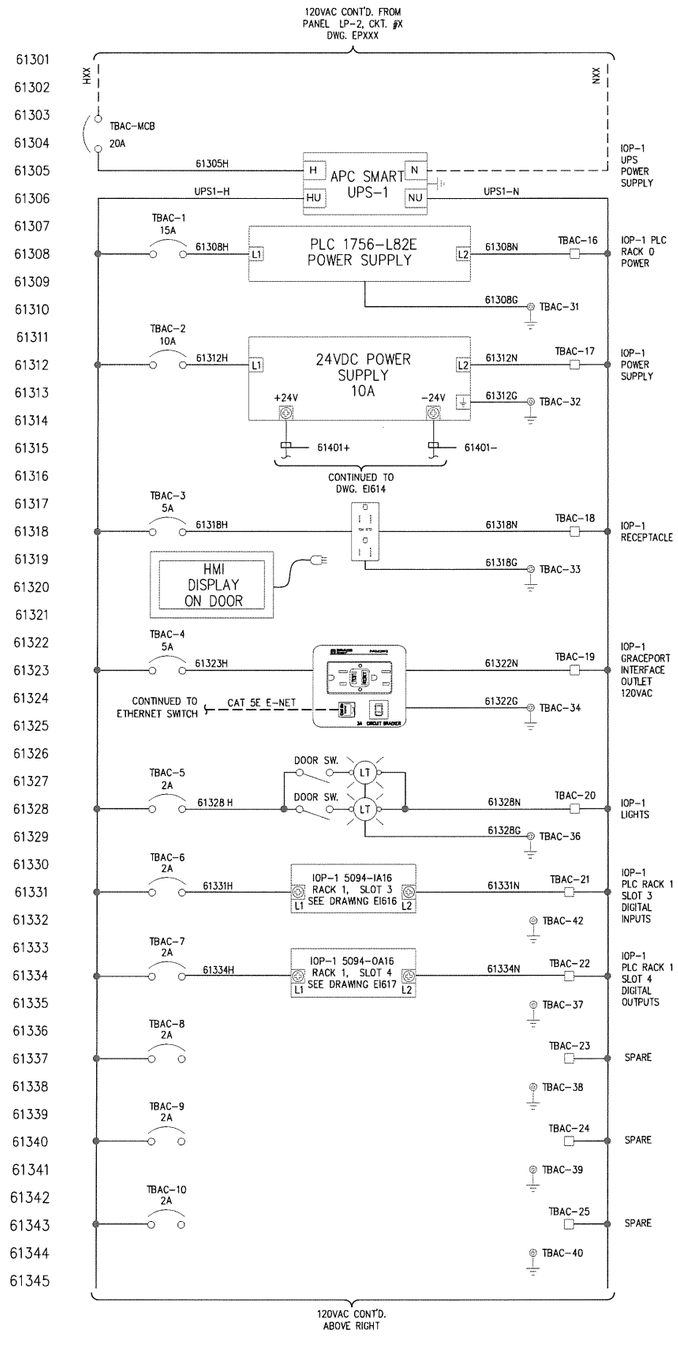

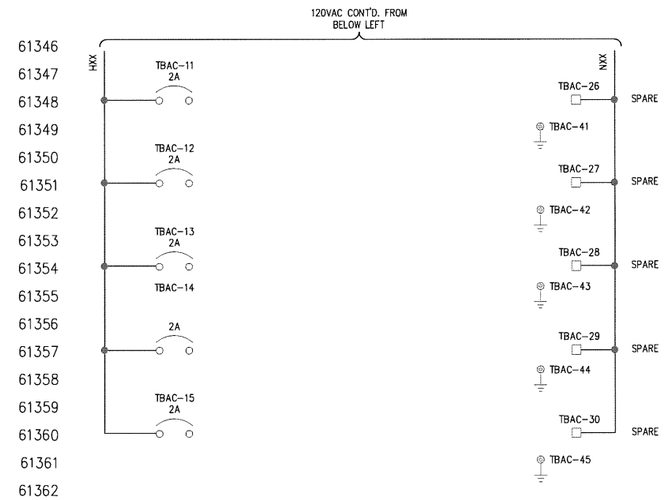

LEGEND:

———— INTERNAL PANEL WIRING (BY PANEL FABRICATOR)

– – – – – – EXTERNAL PANEL WIRING (BY ELECTRICAL CONTRACTOR)

REFERENCE DRAWINGS:

EI610	IOP-1 LAYOUT PANEL & B.O.M
EI611	IOP-1 CONTROL SUB-PANEL LAYOUT & B.O.M
EI612	IOP-1 CONTROL PANEL TERMINAL DETAILS
EI614	IOP-1 CONTROL PANEL 24VDC POWER LADDER
EI615	IOP-1 CONTROL PANEL RACK 1 SLOTS 0 & 1 WIRING
EI616	IOP-1 CONTROL PANEL RACK 1 SLOTS 2 & 3 WIRING
EI617	IOP-1 CONTROL PANEL RACK 1 SLOT 4 WIRING
EI618	NOT USED
EI619	NOT USED
TN601	CONTROL SYSTEM ARCHITECTURE

ISSUED FOR BID - FEBRUARY 2026

THIS DRAWING PRODUCED ON AUTOCAD DO NOT REVISE MANUALLY

"THIS DOCUMENT IS THE PROPERTY OF NAVAL FACILITIES ENGINEERING COMMAND, PREPARED BY TETRA TECH ENGINEERING CORPORATION PC, AND IS PROVIDED UPON THE CONDITION THAT IT WILL NOT BE REPRODUCED, COPIED, OR ISSUED TO A THIRD PARTY, AND WILL BE USED SOLELY FOR THE ORIGINAL INTENDED PURPOSE AND SOLELY FOR THE EXECUTION OR REVIEW OF THE ENGINEERING CONSTRUCTION OF THE PROJECT".

IT IS A VIOLATION OF THE NEW YORK STATE EDUCATION LAW, ARTICLE 145, FOR ANY PERSON, UNLESS UNDER THE DIRECTION OF A NEW YORK STATE LICENSED PROFESSIONAL ENGINEER, TO ALTER AN ITEM ON THIS DOCUMENT IN ANY WAY.

NAVFAC

STATE OF NEW YORK — LICENSED PROFESSIONAL ENGINEER — 080336 — 4/24/26

TETRA TECH
www.tetratech.com
4433 CORPORATION LANE, SUITE 300
VIRGINIA BEACH, VA 23462
PHONE: (757) 461-3755 FAX: (757) 461-4148

A/E INFO

APPROVED
FOR COMMANDER NAVFAC

ACTIVITY: As per document from Nicole Cowand, NAVFAC MIDLANT PL1/EV3.

SATISFACTORY TO DATE 04/24/2026

DES JJK	DRW JJK	CHK WS

PM/DM
BRANCH MANAGER
CHIEF ENG/ARCH
FIRE PROTECTION

NAVAL FACILITIES ENGINEERING SYSTEMS COMMAND - MID - ATLANTIC
NAVAL WEAPONS INDUSTRIAL RESERVE PLANT BETHPAGE, NEW YORK
NAVAL INDUSTRIAL RESERVE ORDNANCE PLANT
PHASE III - TREATMENT PLANT
IOP-1 CONTROL PANEL 120VAC POWER LADDER

RW09

SCALE: AS NOTED
EPROJECT NO.: -
CONSTR. CONTR. NO.
NAVFAC DRAWING NO. ##
SHEET OF -

EI613

FILE NAME: Y:\03-Projects\Federal\NAVFAC\120306005_WE24_PHASE III GWTP_2023\3. Working Files\Drawings\Mech\EI613 - EI617.dwg LAYOUT NAME: EI613 PLOTTED: Tuesday, April 21, 2026 - 7:50am USER: Bill.Stonebraker

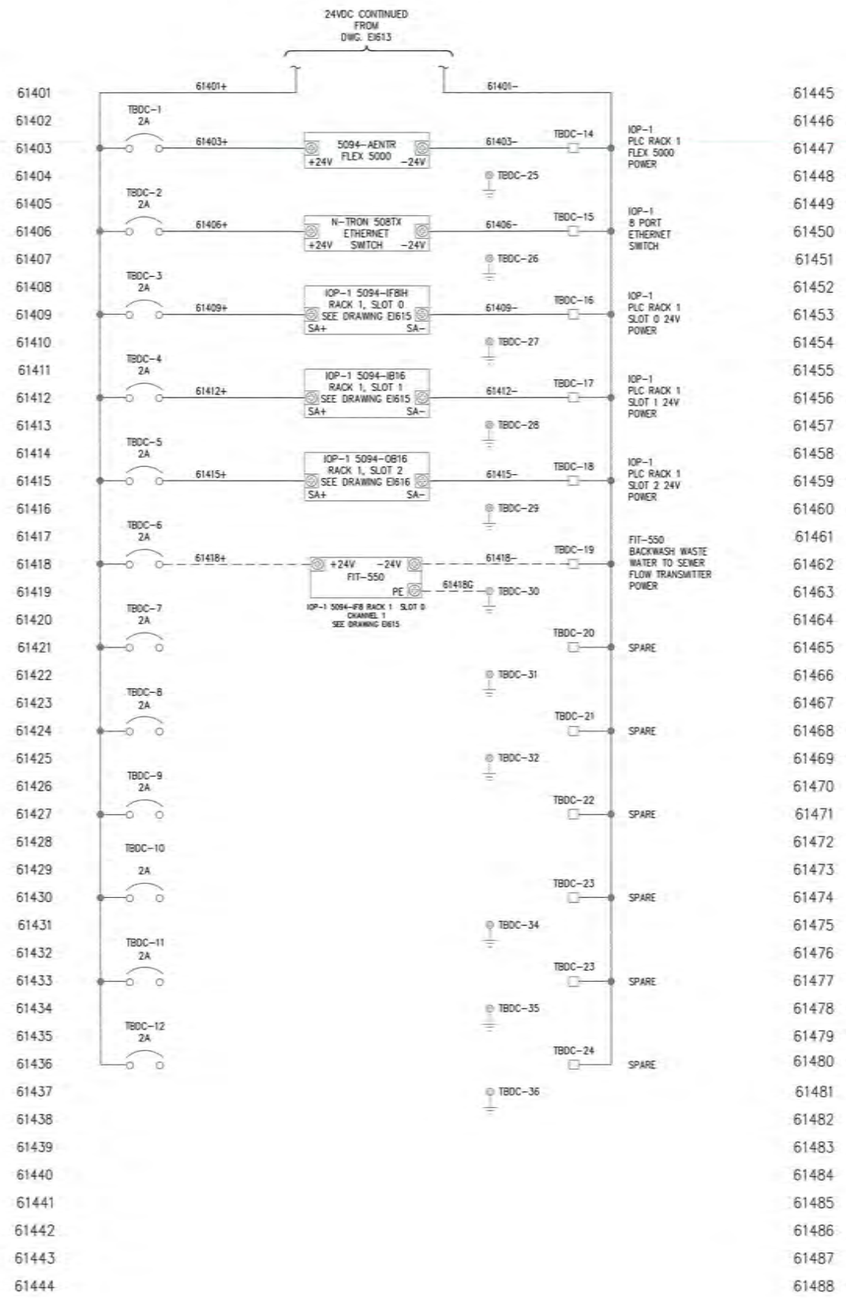

LEGEND:

——————— INTERNAL PANEL WIRING (BY PANEL FABRICATOR)

– – – – – – EXTERNAL PANEL WIRING (BY ELECTRICAL CONTRACTOR)

REFERENCE DRAWINGS:

EI610	IOP–1 LAYOUT PANEL & B.O.M
EI611	IOP–1 CONTROL SUB–PANEL LAYOUT & B.O.M
EI612	IOP–1 CONTROL PANEL TERMINAL DETAILS
EI613	IOP–1 CONTROL PANEL 120VAC POWER LADDER
EI615	IOP–1 CONTROL PANEL RACK 1 SLOTS 0 & 1 WIRING
EI616	IOP–1 CONTROL PANEL RACK 1 SLOTS 2 & 3 WIRING
EI617	IOP–1 CONTROL PANEL RACK 1 SLOT 4 WIRING
EI618	NOT USED
EI619	NOT USED
TN601	CONTROL SYSTEM ARCHITECTURE

THIS DRAWING PRODUCED ON AUTOCAD DO NOT REVISE MANUALLY

"THIS DOCUMENT IS THE PROPERTY OF NAVAL FACILITIES ENGINEERING COMMAND, PREPARED BY TETRA TECH ENGINEERING CORPORATION PC, AND IS PROVIDED UPON THE CONDITION THAT IT WILL NOT BE REPRODUCED, COPIED, OR ISSUED TO A THIRD PARTY, AND WILL BE USED SOLELY FOR THE ORIGINAL INTENDED PURPOSE AND SOLELY FOR THE EXECUTION OR REVIEW OF THE ENGINEERING CONSTRUCTION OF THE PROJECT".

IT IS A VIOLATION OF THE NEW YORK STATE EDUCATION LAW, ARTICLE 145, FOR ANY PERSON, UNLESS UNDER THE DIRECTION OF A NEW YORK STATE LICENSED PROFESSIONAL ENGINEER, TO ALTER AN ITEM ON THIS DOCUMENT IN ANY WAY.

ISSUED FOR BID - FEBRUARY 2026

NAVFAC

TETRA TECH

www.tetratech.com
4430 CORPORATION LANE, SUITE 200
VIRGINIA BEACH, VA 23462
PHONE: (757) 461-3708 FAX: (757) 461-4148
A/E INFO

APPROVED

FOR COMMANDER NAVFAC

ACTION: As per document from Nicole Cowand, NAVFAC MIDLANT FLL/EV3.

SATISFACTORY TO DATE 04/24/2026

DES JJK DRN JJK CHK WS

PM/CM

BRANCH MANAGER

CHIEF ENG/ARCH

FIRE PROTECTION

NAVAL FACILITIES ENGINEERING SYSTEMS COMMAND - MID - ATLANTIC
NAVAL INDUSTRIAL RESERVE ORDNANCE PLANT
NAVAL WEAPONS INDUSTRIAL RESERVE PLANT BETHPAGE, NEW YORK
PHASE III - TREATMENT PLANT
IOP–1 CONTROL PANEL 24VDC POWER LADDER

SCALE: AS NOTED

EPROJECT NO.:

CONSTR. CONTR. NO.

NAVFAC DRAWING NO. ##

SHEET OF

EI614

FILE NAME: Y:\03-Projects\Federal\NAVFAC\112508005_WE24_PHASE III OWTP_2023\3. Working Files\Drawings\ABS\EI613 – EI617.dwg LAYOUT NAME: EI614 PLOTTED: Tuesday, April 21, 2026 – 7:51am USER: IBI.Stonebraker

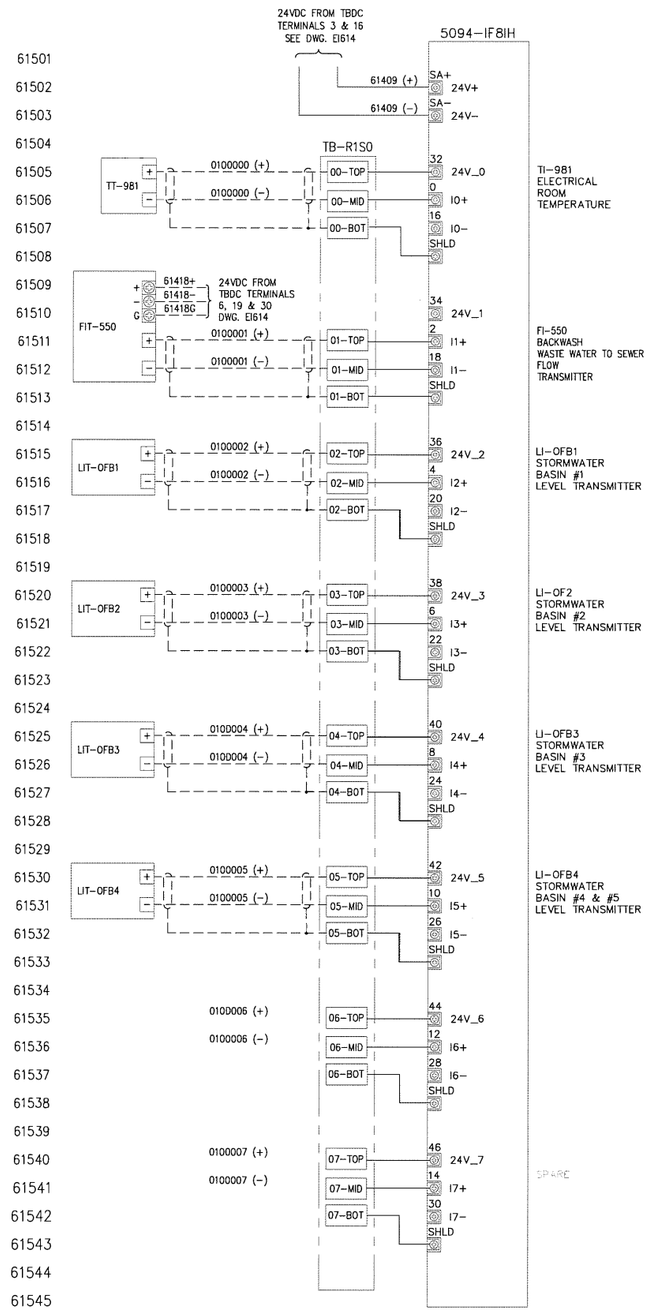

A-B PT# 5094-IF8IH
AI, 4-20mA, HART, 8CHN
RACK 1, SLOT 0

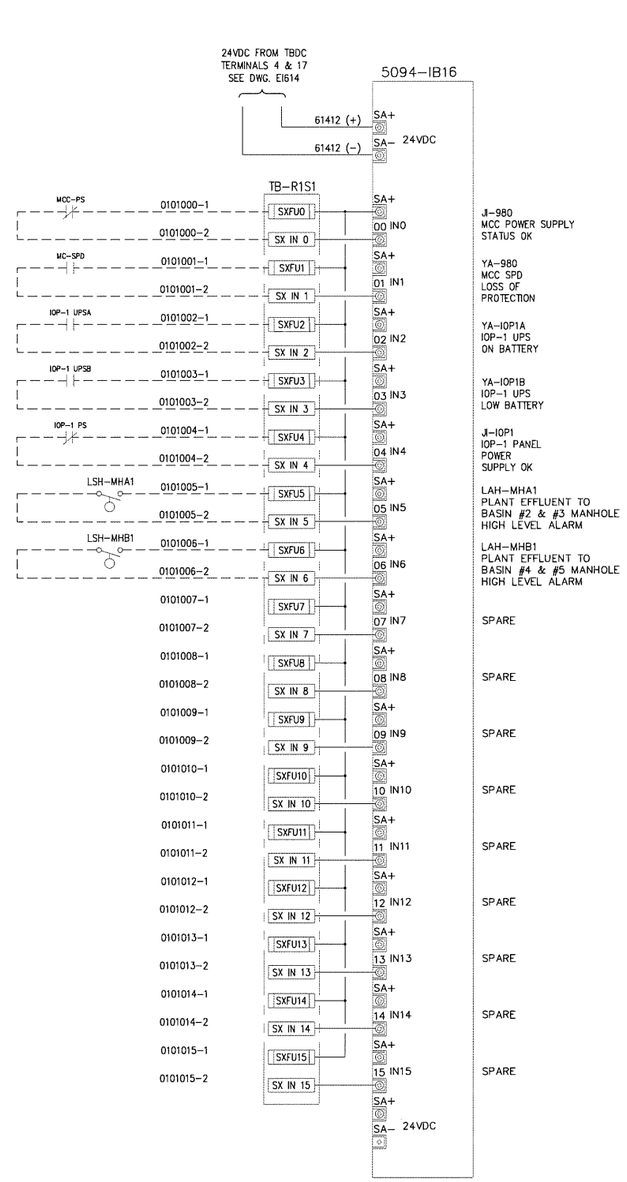

A-B PT# 5094-IB16
DISCRETE INPUT (24VDC)
RACK 1, SLOT 1

LEGEND:

——————— INTERNAL PANEL WIRING (BY PANEL FABRICATOR)

- - - - - - EXTERNAL PANEL WIRING (BY ELECTRICAL CONTRACTOR)

REFERENCE DRAWINGS:

EI610	IOP-1 LAYOUT PANEL & B.O.M
EI611	IOP-1 CONTROL SUB-PANEL LAYOUT & B.O.M
EI612	IOP-1 CONTROL PANEL TERMINAL DETAILS
EI613	IOP-1 CONTROL PANEL 120VAC POWER LADDER
EI614	IOP-1 CONTROL PANEL 24VDC POWER LADDER
EI616	IOP-1 CONTROL PANEL RACK 1 SLOTS 2 & 3 WIRING
EI617	IOP-1 CONTROL PANEL RACK 1 SLOT 4 WIRING
EI618	NOT USED
EI619	NOT USED
TN601	CONTROL SYSTEM ARCHITECTURE

THIS DRAWING PRODUCED ON AUTOCAD
DO NOT REVISE MANUALLY

"THIS DOCUMENT IS THE PROPERTY OF NAVAL FACILITIES ENGINEERING COMMAND, PREPARED BY TETRA TECH ENGINEERING CORPORATION PC, AND IS PROVIDED UPON THE CONDITION THAT IT WILL NOT BE REPRODUCED, COPIED, OR ISSUED TO A THIRD PARTY, AND WILL BE USED SOLELY FOR THE ORIGINAL INTENDED PURPOSE AND SOLELY FOR THE EXECUTION OR REVIEW OF THE ENGINEERING CONSTRUCTION OF THE PROJECT".

IT IS A VIOLATION OF THE NEW YORK STATE EDUCATION LAW, ARTICLE 145, FOR ANY PERSON, UNLESS UNDER THE DIRECTION OF A NEW YORK STATE LICENSED PROFESSIONAL ENGINEER, TO ALTER AN ITEM ON THIS DOCUMENT IN ANY WAY.

ISSUED FOR BID - FEBRUARY 2026

NAVFAC

STATE OF NEW YORK
LICENSED PROFESSIONAL ENGINEER
080356
4/24/26

TETRA TECH
www.tetratech.com
4433 CORPORATION LANE, SUITE 300
VIRGINIA BEACH, VA 23462
PHONE: (757) 461-3766 FAX: (757) 461-4146

A/E W/O

APPROVED
FOR COMMANDER NAVFAC

ACTIVITY
As per document from Nicole Cowand, NAVFAC MIDLANT PL1/EV3.

SATISFACTORY TO DATE 04/24/2026

DES JJK DRW JJK CHK WS

PM/DM
BRANCH MANAGER
CHIEF ENG/ARCH
FIRE PROTECTION

NAVAL FACILITIES ENGINEERING SYSTEMS COMMAND - MID - ATLANTIC
NAVAL INDUSTRIAL RESERVE ORDNANCE PLANT
FM03
NAVAL WEAPONS INDUSTRIAL RESERVE PLANT BETHPAGE, NEW YORK
PHASE III - TREATMENT PLANT

IOP-1 CONTROL PANEL RACK 1 SLOTS 0 & 1

SCALE: AS NOTED
EPROJECT NO.: -
CONSTR. CONTR. NO.
NAVFAC DRAWING NO. ##
SHEET OF -
EI615

FILE NAME: Y:\03-Projects\Federal\NAVFAC\112608005_WE24_PHASE III GWTP_2023\3. Working Files\Drawings\Mech\EI613 - EI617.dwg LAYOUT NAME: EI615 PLOTTED: Tuesday, April 21, 2026 - 7:51am USER: Bill.Stenebraker

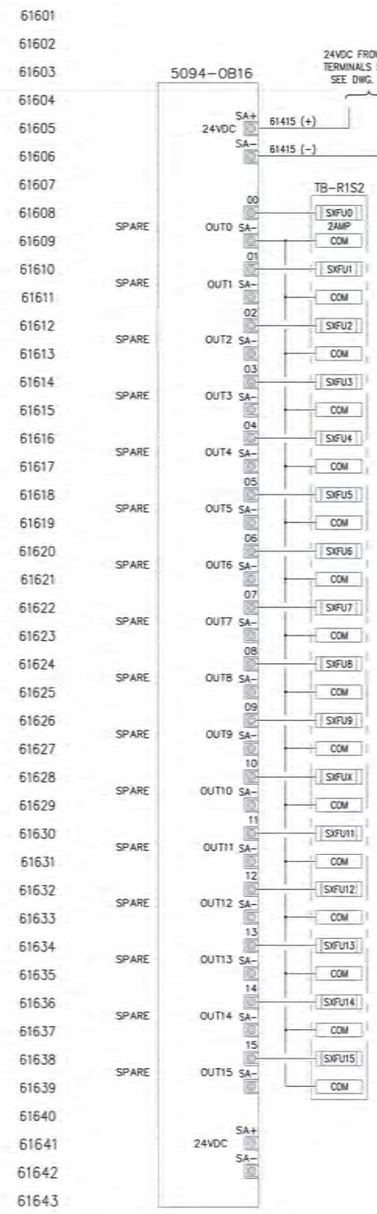

A-B PT# 5094-OB16
DISCRETE OUTPUT (24VDC)
RACK 1, SLOT 2

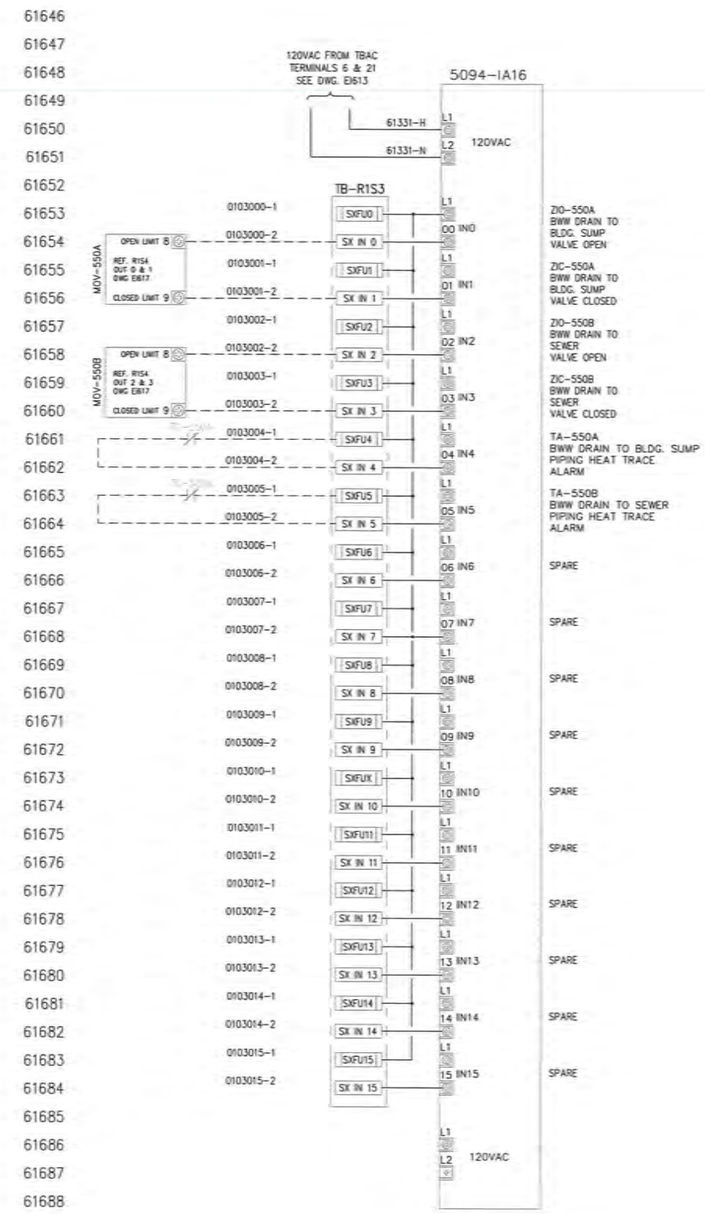

A-B PT# 5094-IA16
DISCRETE INPUT (120VAC)
RACK 1, SLOT 3

LEGEND:

——— INTERNAL PANEL WIRING (BY PANEL FABRICATOR)

- - - - - - EXTERNAL PANEL WIRING (BY ELECTRICAL CONTRACTOR)

REFERENCE DRAWINGS:

EI610	IOP-1 LAYOUT PANEL & B.O.M
EI611	IOP-1 CONTROL SUB-PANEL LAYOUT & B.O.M
EI612	IOP-1 CONTROL PANEL TERMINAL DETAILS
EI613	IOP-1 CONTROL PANEL 120VAC POWER LADDER
EI614	IOP-1 CONTROL PANEL 24VDC POWER LADDER
EI615	IOP-1 CONTROL PANEL RACK 1 SLOTS 0 & 1 WIRING
EI617	IOP-1 CONTROL PANEL RACK 1 SLOT 4 WIRING
EI618	NOT USED
EI619	NOT USED
TN601	CONTROL SYSTEM ARCHITECTURE

THIS DRAWING PRODUCED ON AUTOCAD
DO NOT REVISE MANUALLY

"THIS DOCUMENT IS THE PROPERTY OF NAVAL FACILITIES ENGINEERING COMMAND, PREPARED BY TETRA TECH ENGINEERING CORPORATION PC, AND IS PROVIDED UPON THE CONDITION THAT IT WILL NOT BE REPRODUCED, COPIED, OR ISSUED TO A THIRD PARTY, AND WILL BE USED SOLELY FOR THE ORIGINAL INTENDED PURPOSE AND SOLELY FOR THE EXECUTION OR REVIEW OF THE ENGINEERING CONSTRUCTION OF THE PROJECT".

IT IS A VIOLATION OF THE NEW YORK STATE EDUCATION LAW, ARTICLE 145, FOR ANY PERSON, UNLESS UNDER THE DIRECTION OF A NEW YORK STATE LICENSED PROFESSIONAL ENGINEER, TO ALTER AN ITEM ON THIS DOCUMENT IN ANY WAY.

ISSUED FOR BID - FEBRUARY 2026

NAVFAC

TETRA TECH
www.tetratech.com
4430 CORPORATION LANE, SUITE 300
VIRGINIA BEACH, VA 23462
PHONE: (757) 493-3258 FAX: (757) 493-4148
A/E INFO

APPROVED
FOR COMMANDER NAVFAC
ACTION: As per document from Nicole Cowand, NAVFAC MIDLANT PLL/CV3.
SATISFACTORY TO SME 04/24/2026
DES JJK DRW JJK CHK WS
PM/CM
BRANCH MANAGER
CHIEF ENG/ARCH
FIRE PROTECTION

NAVAL FACILITIES ENGINEERING SYSTEMS COMMAND - MID - ATLANTIC
NAVAL INDUSTRIAL RESERVE ORDNANCE PLANT
BWI03 NAVAL WEAPONS INDUSTRIAL RESERVE PLANT BETHPAGE, NEW YORK
PHASE III - TREATMENT PLANT
IOP-1 CONTROL PANEL RACK 1 SLOTS 2 & 3

SCALE: AS NOTED
EPROJECT NO.:
CONSTR. CONTR. NO.
NAVFAC DRAWING NO. ##
SHEET OF
EI616

FILE NAME: Y:\03-Projects\Federal\NAVFAC\172008005_WE24_PHASE III GWTP_2023\3. Working Files\Drawings\ABC\EI613 - EI617.dwg LAYOUT NAME: EI616 PLOTTED: Tuesday, April 21, 2026 - 7:51am USER: Bill.Stonebraker

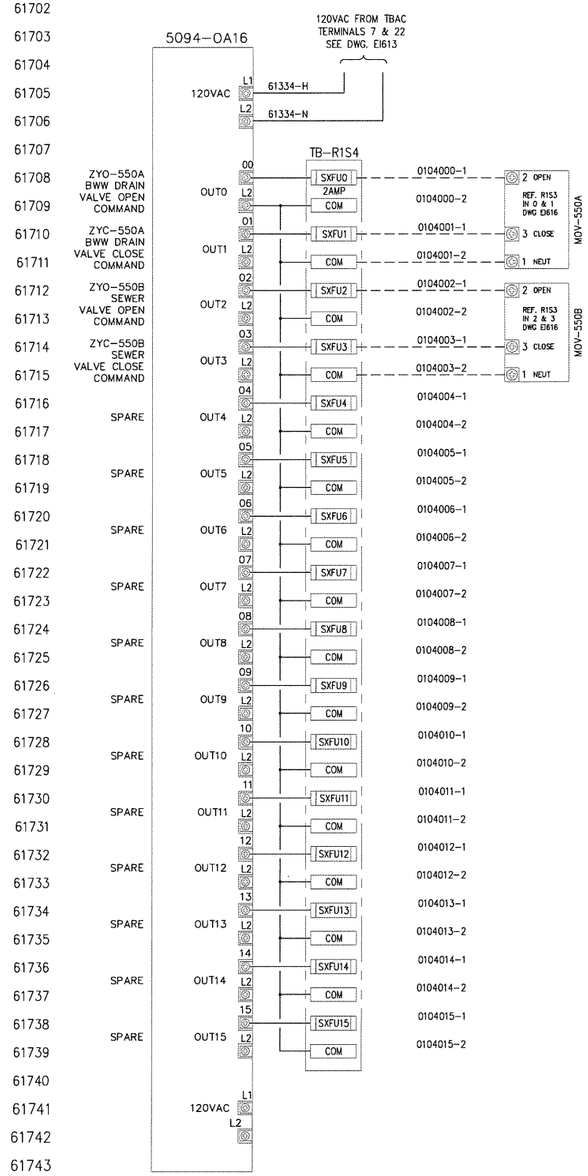

A-B PT# 5094-OA16
DISCRETE OUTPUT (120VAC)
RACK 1, SLOT 4

LEGEND:

———— INTERNAL PANEL WIRING (BY PANEL FABRICATOR)

– – – – – – EXTERNAL PANEL WIRING (BY ELECTRICAL CONTRACTOR)

REFERENCE DRAWINGS:

EI610	IOP-1 LAYOUT PANEL & B.O.M
EI611	IOP-1 CONTROL SUB-PANEL LAYOUT & B.O.M
EI612	IOP-1 CONTROL PANEL TERMINAL DETAILS
EI613	IOP-1 CONTROL PANEL 120VAC POWER LADDER
EI614	IOP-1 CONTROL PANEL 24VDC POWER LADDER
EI615	IOP-1 CONTROL PANEL RACK 1 SLOTS 0 & 1 WIRING
EI616	IOP-1 CONTROL PANEL RACK 1 SLOTS 2 & 3 WIRING
EI618	NOT USED
EI619	NOT USED
TN601	CONTROL SYSTEM ARCHITECTURE

THIS DRAWING PRODUCED ON AUTOCAD
DO NOT REVISE MANUALLY

"THIS DOCUMENT IS THE PROPERTY OF NAVAL FACILITIES ENGINEERING COMMAND, PREPARED BY TETRA TECH ENGINEERING CORPORATION PC, AND IS PROVIDED UPON THE CONDITION THAT IT WILL NOT BE REPRODUCED, COPIED, OR ISSUED TO A THIRD PARTY, AND WILL BE USED SOLELY FOR THE ORIGINAL INTENDED PURPOSE AND SOLELY FOR THE EXECUTION OR REVIEW OF THE ENGINEERING CONSTRUCTION OF THE PROJECT".

IT IS A VIOLATION OF THE NEW YORK STATE EDUCATION LAW, ARTICLE 145, FOR ANY PERSON, UNLESS UNDER THE DIRECTION OF A NEW YORK STATE LICENSED PROFESSIONAL ENGINEER, TO ALTER AN ITEM ON THIS DOCUMENT IN ANY WAY.

ISSUED FOR BID - FEBRUARY 2026

NAVFAC

STATE OF NEW YORK
LICENSED PROFESSIONAL ENGINEER
080336

TETRA TECH
www.tetratech.com
4433 CORPORATION LANE, SUITE 300
VIRGINIA BEACH, VA 23462
PHONE: (757) 461-3756 FAX: (757) 461-4148
A/E INFO

APPROVED
FOR COMMANDER NAVFAC
ACTIVITY
As per document from Nicole Cowand, NAVFAC MIDLANT PLL/EV3
SATISFACTORY TO DATE 04/24/2026

DES	DRW	CHK
JJK	JJK	WS

PM/DM
BRANCH MANAGER
CHIEF ENG/ARCH
FIRE PROTECTION

NAVAL FACILITIES ENGINEERING SYSTEMS COMMAND - MID - ATLANTIC
NAVAL INDUSTRIAL RESERVE ORDNANCE PLANT
RW09
NAVAL WEAPONS INDUSTRIAL RESERVE PLANT BETHPAGE, NEW YORK
PHASE III - TREATMENT PLANT
IOP-1 CONTROL PANEL RACK 1 SLOT 4

SCALE: AS NOTED
EPROJECT NO.: -
CONSTR. CONTR. NO.
NAVFAC DRAWING NO. ##
SHEET OF -
EI617

FILE NAME: Y:\03-Projects\Federal\NAVFAC\120308005_WE24_PHASE III GWTP_2023\3. Working Files\Drawings\AE\1613 - EI617.dwg LAYOUT NAME: EI617 PLOTTED: Tuesday, April 21, 2026 - 7:52am USER: Bill.Stonebraker

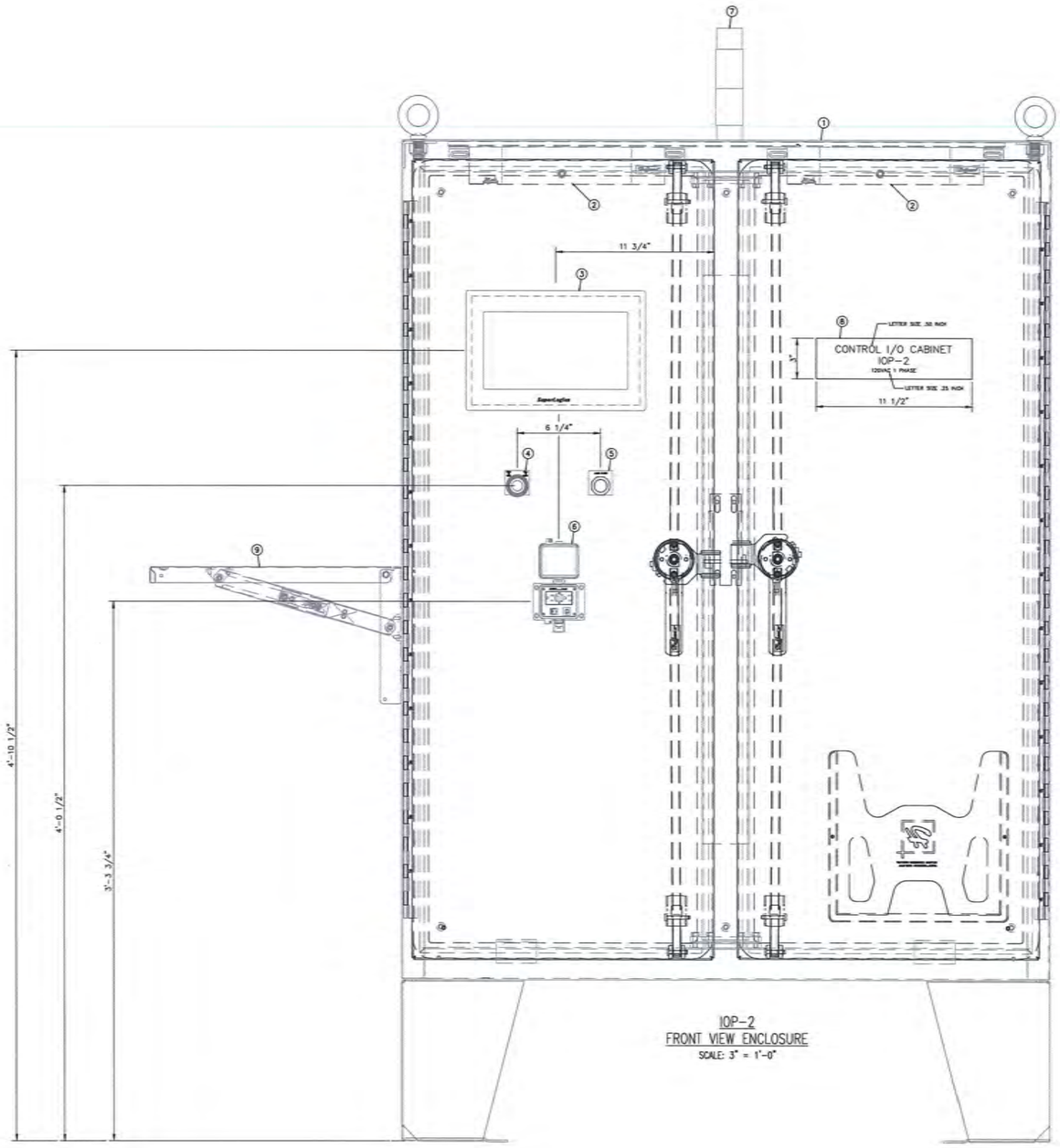

IOP-2
FRONT VIEW ENCLOSURE
SCALE: 3" = 1'-0"

PANEL BILL OF MATERIAL

ITEM	QUAN	DESCRIPTION	SUPPLIER
1	1	FREE STANDING ENCLOSURE WITH 3 POINT LATCHES & FLOOR STANDS 62"H x 48"W x 12"D, NEMA 4X HOFFMAN CAT. NO. A62H4812SSLP3PT (OR EQUAL)	PANEL SHOP
2	2	ENCLOSURE FLUORESCENT LIGHT 120VAC HOFFMAN CAT. NO. LF120V15 (OR EQUAL) POWER CORD WITH LEADS, HOFFMAN CAT. NO. LP72 (OR EQUAL) DOOR SWITCH (2) HOFFMAN CAT. NO. PLFSWD (OR EQUAL)	PANEL SHOP
3	1	OPERATOR HMI SCREEN SUPER LOGICS CAT. NO. SL-PPC-12AWHD-LLH310I-S17 (OR EQUAL)	PANEL SHOP
4	1	E-STOP PUSHBUTON PUSH PULL MAINTAINED, NON-ILLUMINATED, 1 N.C. CONTACT ALLEN-BRADLEY CAT. No. 800T-FX6D4 (OR EQUAL) LEGEND PLATE "PUSH TO STOP -PULL TO START" ALLEN BRADLEY CAT. No. 800H-W196 (OR EQUAL)	PANEL SHOP
5	1	PUSHBUTON, MOMENTARY CONTACT, W / BLACK CAP, 1 N.O. CONTACT ALLEN-BRADLEY CAT. No. 800T-A2D1 (OR EQUAL) CUSTOM LEGEND PLATE MARKED "ALARM SILENCE" ALLEN BRADLEY CAT. No. 800T-X559 (OR EQUAL)	PANEL SHOP
6	1	PANEL INTERFACE CONNECTOR GRACE PORT CAT. NO. P-R2-K3RF3 (OR EQUAL)	PANEL SHOP
7	1	PRE-ASSEMBLED STACK LIGHT SURFACE MOUNTED RED STEADY LED, SINGLE CIRCUIT PIEZO MODULE ALLEN BRADLEY CAT. NNO. 855EC-B24Y4P1	PANEL SHOP
8	AS REQ'D.	PHENOLIC NAMEPLATE 3"H x 11 1/2"W WHITE W/BLACK 1/2" HIGH LETTERS, & 1/4" HIGH LETTERS SEE NAMEPLATE SCHEDULE	PANEL SHOP
9	1	12" x 18" FOLDING SHELF (WHITE) HOFFMAN CAT. No. AASHF1218 (OR EQUAL)	PANEL SHOP

REFERENCE DRAWINGS:

EI620	IOP-2 LAYOUT PANEL & B.O.M
EI621	IOP-2 CONTROL SUB-PANEL LAYOUT & B.O.M
EI622	IOP-2 CONTROL PANEL TERMINAL DETAILS
EI623	IOP-2 CONTROL PANEL 120VAC POWER LADDER
EI624	IOP-2 CONTROL PANEL 24VDC POWER LADDER
EI625	IOP-2 CONTROL PANEL RACK 2 SLOTS 0 & 1 WIRING
EI626	IOP-2 CONTROL PANEL RACK 2 SLOTS 2 & 3 WIRING
EI627	IOP-2 CONTROL PANEL RACK 2 SLOTS 4 & 5 WIRING
EI628	IOP-2 CONTROL PANEL RACK 3 SLOTS 0 & 1 WIRING
EI629	IOP-2 CONTROL PANEL RACK 3 SLOTS 2 & 3 WIRING
TN601	CONTROL SYSTEM ARCHITECTURE

THIS DRAWING PRODUCED ON AUTOCAD
DO NOT REVISE MANUALLY

"THIS DOCUMENT IS THE PROPERTY OF NAVAL FACILITIES ENGINEERING COMMAND, PREPARED BY TETRA TECH ENGINEERING CORPORATION PC, AND IS PROVIDED UPON THE CONDITION THAT IT WILL NOT BE REPRODUCED, COPIED, OR ISSUED TO A THIRD PARTY, AND WILL BE USED SOLELY FOR THE ORIGINAL INTENDED PURPOSE AND SOLELY FOR THE EXECUTION OR REVIEW OF THE ENGINEERING CONSTRUCTION OF THE PROJECT".

IT IS A VIOLATION OF THE NEW YORK STATE EDUCATION LAW, ARTICLE 145, FOR ANY PERSON, UNLESS UNDER THE DIRECTION OF A NEW YORK STATE LICENSED PROFESSIONAL ENGINEER, TO ALTER AN ITEM ON THIS DOCUMENT IN ANY WAY.

ISSUED FOR BID - FEBRUARY 2026

NAVFAC

TETRA TECH
www.tetratech.com
4433 CORPORATION LANE, SUITE 300
VIRGINIA BEACH, VA 23462
PHONE: (757) 457-3700 FAX: (757) 457-4140
A/E INFO

APPROVED
FOR COMMANDER NAVFAC 4/30/2026
ACTIVITY
As per document from Nicole Cowand, NAVFAC MIDLANT PLL/EV3.
SATISFACTORY TO DATE 04/24/2026
DES JJK DRW JJK CHK WS
PM/DM
BRANCH MANAGER
CHIEF ENG/ARCH
FIRE PROTECTION

NAVAL FACILITIES ENGINEERING SYSTEMS COMMAND - MID - ATLANTIC
NAVAL INDUSTRIAL RESERVE ORDNANCE PLANT
PN009 NAVAL WEAPONS INDUSTRIAL RESERVE PLANT BETHPAGE, NEW YORK
PHASE III - TREATMENT PLANT
IOP-2 CONTROL PANEL LAYOUT & BILL OF MATERIAL

SCALE: AS NOTED
(PROJECT NO.): -
CONSTR. CONTR. NO.
NAVFAC DRAWING NO. ##
SHEET OF -
EI620

FILE NAME: Y:\Q3-Projects\Federal\NAVFAC\112508005_WE24_PHASE III GWTP_2023\3. Working Files\Drawings\Mid\EI620 - EI622.dwg LAYOUT NAME: EI620 PLOTTED: Tuesday, April 21, 2026 - 7:53am USER: Bill.Stonebraker

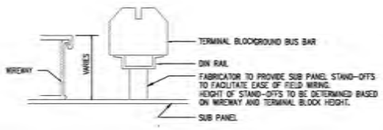

NAMEPLATE SCHEDULE

ITEM	MK NO.	LINE 1	LINE 2
A	41	TBAC	
B	41	TBDC	
C	42	RACK R2	
D	40	R2S0	
E	40	R2S1	
F	40	R2S2	
G	40	R2S3	
H	40	R2S4	
J	40	R2S5	
K	42	RACK R3	
L	40	R3S0	
M	40	R3S1	
N	40	R3S2	
P	41	TBCR	

SUB-PANEL BILL OF MATERIAL

ITEM	QUAN	DESCRIPTION	SUPPLIER
38	18	GROUNDING TERMINAL 300V ALLEN BRADLEY CAT. NO. 1492-JG3	PANEL SHOP
39	1	RELAY MODULE; NOMINAL INPUT VOLTAGE: 24 VDC; 2 CHANGEOVER CONTACT; LIMITING CONTINUOUS CURRENT: 8 A; WITH MAN. OPER.; RED STATUS INDICATOR WAGO 788-312 (OR EQUAL)	PANEL SHOP
40	AS REQ'D.	PHENOLIC NAMEPLATE 1/2"H x 1 1/2"W WHITE W/BLACK 1/4" HIGH LETTERS, SEE NAMEPLATE SCHEDULE	PANEL SHOP
41	AS REQ'D.	PHENOLIC NAMEPLATE 3/4"H x 2"W WHITE W/BLACK 3/8" HIGH LETTERS, SEE NAMEPLATE SCHEDULE	PANEL SHOP
42	AS REQ'D.	PHENOLIC NAMEPLATE 1"H x 3"W WHITE W/BLACK 3/8" HIGH LETTERS, SEE NAMEPLATE SCHEDULE	PANEL SHOP
43	1	ISOLATED GROUND BAR SYSTEM, 200mm, HOFFMAN CAT NO. X-GS2K (OR EQUAL)	PANEL SHOP
44	1	RECEPTACLE 15A GFCI DIN RAIL MOUNTED WEIDMULLER CAT. NO. 6720005422 (OR EQUAL)	PANEL SHOP
45	AS REQ'D.	SLOTTED WIRE DUCT 3"W x 4"H / WITH COVER PANDUIT	PANEL SHOP
46	AS REQ'D.	SLOTTED WIRE DUCT 4"W x 4"H / WITH COVER PANDUIT	PANEL SHOP

SUB-PANEL BILL OF MATERIAL

ITEM	QUAN	DESCRIPTION	SUPPLIER
1	1	SUB-PANEL 56"H x 44"W, HOFFMAN CAT. NO. A60P48 (OR EQUAL)	PANEL SHOP
2	2	FLEX 5000 I/O, ETHERNET ADAPTER ALLEN BRADLEY CAT. NO. 5094-AENTR	PANEL SHOP
3	9	FLEX 5000 I/O, MOUNTING BASE ALLEN BRADLEY CAT. NO. 5094-MB	PANEL SHOP
4	3	FLEX 5000 I/O, SHIELD BAR ALLEN BRADLEY CAT. NO. 5094-STB	PANEL SHOP
5	3	FLEX 5000 I/O, TERMINAL BASE FOR 5094-IF8IH ALLEN BRADLEY CAT. NO. 5094-RTB3I	PANEL SHOP
6	6	FLEX 5000 I/O, REMOVABLE TERMINAL BASE FOR 5094-IB16, 5094-OB16, 5094-IA16, 5094-OA16 ALLEN BRADLEY CAT. NO. 5094-RTB3	PANEL SHOP
7	3	FLEX 5000 I/O, ANALOG 8 INPUT ISOLATED HART MODULE ALLEN BRADLEY CAT. NO. 5094-IF8IH	PANEL SHOP
8	N/A	FLEX 5000 I/O, ANALOG 8 OUTPUT MODULE ALLEN BRADLEY CAT. NO. 5094-OF8	PANEL SHOP
9	3	FLEX 5000 I/O, 24VDC 16 DIGITAL INPUT MODULE ALLEN BRADLEY CAT. NO. 5094-IB16	PANEL SHOP
10	1	FLEX 5000 I/O, 24VDC 16 DIGITAL OUTPUT MODULE ALLEN BRADLEY CAT. NO. 5094-OB16	PANEL SHOP
11	1	FLEX 5000 I/O, 120VAC 16 DIGITAL INPUT MODULE ALLEN BRADLEY CAT. NO. 5094-IA16	PANEL SHOP
12	1	FLEX 5000 I/O, 120VAC 16 DIGITAL OUTPUT MODULE ALLEN BRADLEY CAT. NO. 5094-OA16	PANEL SHOP
13	1	POWER SUPPLY QUINT PS/1AC/24DC/10A, DC OK ACTIVE PHEONIX CONTACT CAT. NO. 286673	PANEL SHOP
14	1	ETHERNET SWITCH 6 RJ-45 COPPER PORTS NTRON CAT. NO. 306TX	PANEL SHOP
15	1	SOLA INDUSTRIAL UPS 120VAC, 60HZ, 500VA, 300W, 4 MINUTE BACK UP TIME SOLA CAT. NO. SDU-500	PANEL SHOP
16	1	SOLA FORM C DRY CONTACT SOLA CAT. NO. RELAYCARD-SDU UT 4-L/HESID 24 W/ BLOWN FUSE INDICATOR, 5 X 20 mm FUSE HOLDER	PANEL SHOP
17	64	FOR 5094-IB16 & 5094-OB16 PHOENIX CONTACT CAT. NO. 3214366 UT 4-L/HESI W/ BLOWN FUSE INDICATOR, 5 X 20 mm FUSE HOLDER	PANEL SHOP
18	32	FOR 5094-IA16 & 5094-OA16 PHOENIX CONTACT CAT. NO. 3214325 TRI LEVEL DISCONNECT TERMINAL BLOCK	PANEL SHOP
19	24	FOR 5094-IF8IH & 5094-OF8 PHOENIX CONTACT CAT. NO. 3214325	PANEL SHOP
20	11	END BRACKET FOR NS 35 MOUNTING RAIL TYPE E/UK 1 (DOUBLE/TRIPPLE/LEVEL TERM) PHOENIX CONTACT CAT. NO. 201413	PANEL SHOP
21	64	FUSE 5x20mm RATING 1/2 AMP 5mm x 20mm BUSSMAN GMA	PANEL SHOP
22	32	FUSE 5x20mm RATING 2 AMP 5mm x 20mm BUSSMAN GMA	PANEL SHOP
23	AS REQ'D.	TS 35 x 7.5 mm SLOTTED STEEL DIN RAIL (ALUMINUM NOT ACCEPTED) ALLEN BRADLEY CAT. NO. 1492-EAHJ35 (OR EQUAL)	PANEL SHOP
24	3	GROUP MARKER ALLEN BRADLEY CAT. NO. 1492-GM35 (OR EQUAL)	PANEL SHOP
25	12	END ANCHOR ALLEN BRADLEY CAT. NO. 1492-ERL35 (OR EQUAL)	PANEL SHOP
26	1	20 AMP CIRCUIT BREAKER 1 POLE ALLEN BRADLEY CAT. NO. 1489-A1C200 (OR EQUAL)	PANEL SHOP
27	1	15 AMP CIRCUIT BREAKER 1 POLE ALLEN BRADLEY CAT. NO. 1489-A1C150 (OR EQUAL)	PANEL SHOP
28	1	10 AMP CIRCUIT BREAKER 1 POLE ALLEN BRADLEY CAT. NO. 1489-A1C100 (OR EQUAL)	PANEL SHOP
29	2	5 AMP CIRCUIT BREAKER 1 POLE ALLEN BRADLEY CAT. NO. 1489-A1C050 (OR EQUAL)	PANEL SHOP
30	38	2 AMP CIRCUIT BREAKER 1 POLE ALLEN BRADLEY CAT. NO. 1492-GH020 (OR EQUAL)	PANEL SHOP
31	24	FEED THROUGH TERMINAL 600V ALLEN BRADLEY CAT. NO. 1492-J4BL (OR EQUAL)	PANEL SHOP
32	2	PARTITION PLATE ALLEN BRADLEY CAT. NO. 1492-EBJ16 (OR EQUAL)	PANEL SHOP
33	24	GROUND BLOCK TERMINAL 600V ALLEN BRADLEY CAT. NO. 1492 (OR EQUAL)	PANEL SHOP
34	AS REQ'D.	MARKING SYSTEM (FOR 600V TERMINALS ALLEN BRADLEY CAT. NO. 1492-MR6X12 (OR EQUAL)	PANEL SHOP
35	18	FEED THROUGH TERMINAL 300V ALLEN BRADLEY CAT. NO. 1492-WM4 (OR EQUAL)	PANEL SHOP
36	2	PARTITION PLATE ALLEN BRADLEY CAT. NO. 1492-PPM3 (OR EQUAL)	PANEL SHOP
37	AS REQ'D.	MARKING SYSTEM (FOR 300V TERMINALS) ALLEN BRADLEY CAT. NO. 1492-MR6X9 (OR EQUAL)	PANEL SHOP

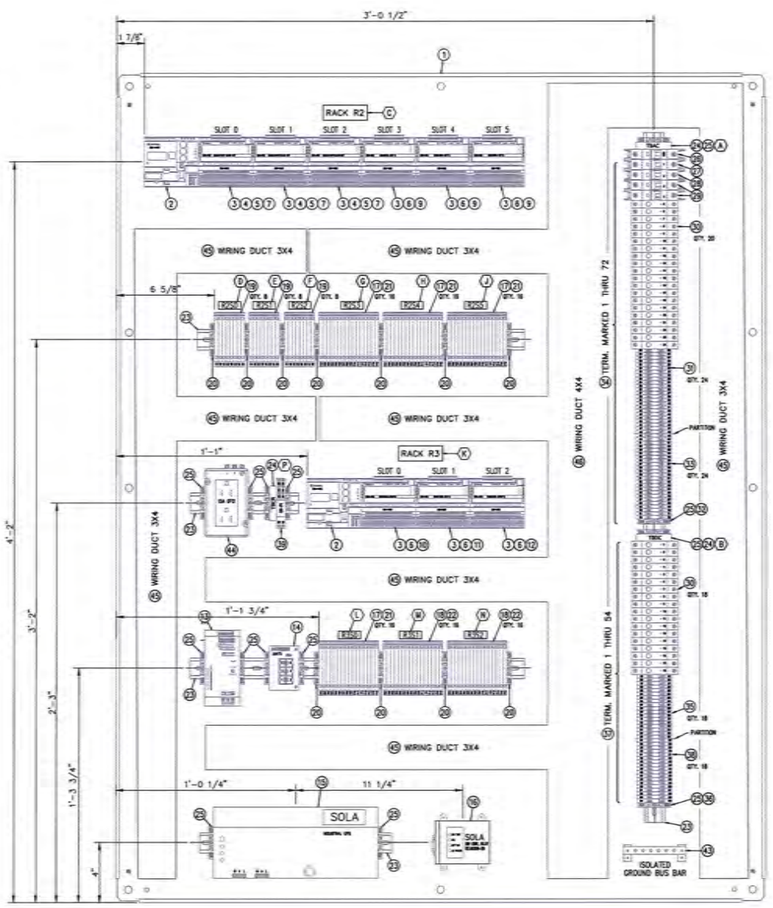

IOP-2
SUBPANEL ARRANGEMENT
SCALE: 3" = 1'-0"

NOTES:

1. ALL TERMINAL BLOCKS TO BE NUMBERED WITH PREPRINTED LABELS.
2. ALL WIRING TO HAVE IMPRINTED SHRINK TUBING ID LABELS.
3. PANEL SHOP TO INSTALL STAND-OFFS UNDER DIN RAIL TO BRING TERMINALS FLUSH WITH TOP OF WIRING DUCT.

REFERENCE DRAWINGS:

E1620 IOP-2 LAYOUT PANEL & B.O.M
E1621 IOP-2 CONTROL SUB-PANEL LAYOUT & B.O.M
E1622 IOP-2 CONTROL PANEL TERMINAL DETAILS
E1623 IOP-2 CONTROL PANEL 120VAC POWER LADDER
E1624 IOP-2 CONTROL PANEL 24VDC POWER LADDER
E1625 IOP-2 CONTROL PANEL RACK 2 SLOTS 0 & 1 WIRING
E1626 IOP-2 CONTROL PANEL RACK 2 SLOTS 2 & 3 WIRING
E1627 IOP-2 CONTROL PANEL RACK 2 SLOTS 4 & 5 WIRING
E1628 IOP-2 CONTROL PANEL RACK 3 SLOTS 0 & 1 WIRING
E1629 IOP-2 CONTROL PANEL RACK 3 SLOTS 2 & 3 WIRING
TN601 CONTROL SYSTEM ARCHITECTURE

THIS DRAWING PRODUCED ON AUTOCAD
DO NOT REVISE MANUALLY

"THIS DOCUMENT IS THE PROPERTY OF NAVAL FACILITIES ENGINEERING COMMAND, PREPARED BY TETRA TECH ENGINEERING CORPORATION PC, AND IS PROVIDED UPON THE CONDITION THAT IT WILL NOT BE REPRODUCED, COPIED, OR ISSUED TO A THIRD PARTY, AND WILL BE USED SOLELY FOR THE ORIGINAL INTENDED PURPOSE AND SOLELY FOR THE EXECUTION OR REVIEW OF THE ENGINEERING CONSTRUCTION OF THE PROJECT".

IT IS A VIOLATION OF THE NEW YORK STATE EDUCATION LAW, ARTICLE 145, FOR ANY PERSON, UNLESS UNDER THE DIRECTION OF A NEW YORK STATE LICENSED PROFESSIONAL ENGINEER, TO ALTER AN ITEM ON THIS DOCUMENT IN ANY WAY.

ISSUED FOR BID - FEBRUARY 2026

NAVFAC

TETRA TECH
www.tetratech.com
4430 CORPORATION LANE, SUITE 300
VIRGINIA BEACH, VA 23462
PHONE: (757) 461-3768 FAX: (757) 461-4148
A/E INFO

APPROVED
FOR COMMANDER NAVFAC
COMMENTS
As per document from Nicole Cowand, NAVFAC MIDLANT PLL/EV3.
SATISFACTORY TO SME 04/24/2026
DES JJK DRW JJK CHK WS
PM/CM
BRANCH MANAGER
CHIEF ENG/ARCH
FIRE PROTECTION

NAVAL FACILITIES ENGINEERING SYSTEMS COMMAND - MID - ATLANTIC
NAVAL INDUSTRIAL RESERVE ORDNANCE PLANT
NAVAL WEAPONS INDUSTRIAL RESERVE PLANT BETHPAGE, NEW YORK
PHASE III - TREATMENT PLANT
IOP-2 SUB-PANEL LAYOUT & BILL OF MATERIAL

SCALE: AS NOTED
CPROJECT NO.: -
CONSTR. CONTR. NO.
NAVFAC DRAWING NO. ##
SHEET OF -
E1621

FILE NAME: Y:\03-Projects\Federal\NAVFAC\112G06005_MC24_PHASE III GWTP_2023\3. Working Files\Drawings\ACS\E620 - E1622.dwg LAYOUT NAME: E1621 PLOTTED: Tuesday, April 21, 2026 - 7:53am USER: Bill.Standwicker

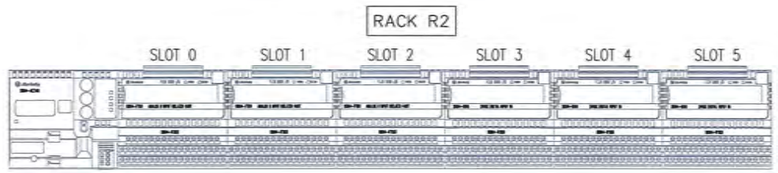

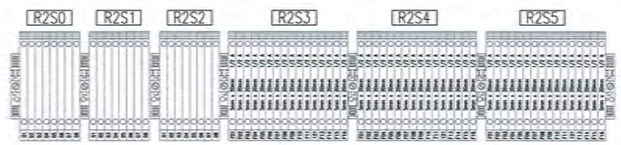

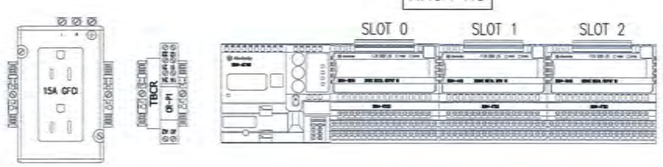

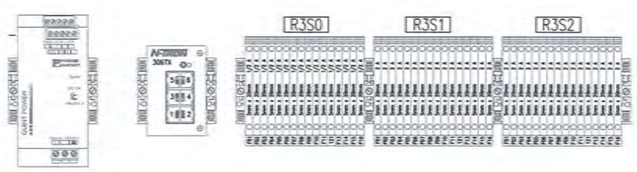

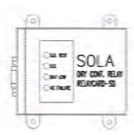

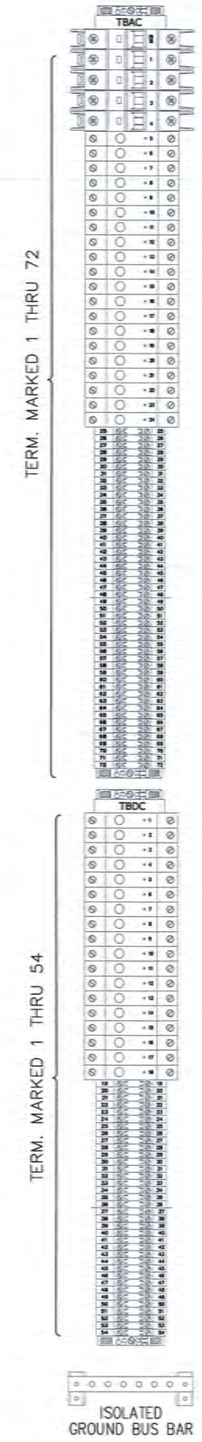

REFERENCE DRAWINGS:

EI620	IOP-2 LAYOUT PANEL & B.O.M
EI621	IOP-2 CONTROL SUB-PANEL LAYOUT & B.O.M
EI622	IOP-2 CONTROL PANEL TERMINAL DETAILS
EI623	IOP-2 CONTROL PANEL 120VAC POWER LADDER
EI624	IOP-2 CONTROL PANEL 24VDC POWER LADDER
EI625	IOP-2 CONTROL PANEL RACK 2 SLOTS 0 & 1 WIRING
EI626	IOP-2 CONTROL PANEL RACK 2 SLOTS 2 & 3 WIRING
EI627	IOP-2 CONTROL PANEL RACK 2 SLOTS 4 & 5 WIRING
EI628	IOP-2 CONTROL PANEL RACK 3 SLOTS 0 & 1 WIRING
EI629	IOP-2 CONTROL PANEL RACK 3 SLOTS 2 & 3 WIRING
TN601	CONTROL SYSTEM ARCHITECTURE

THIS DRAWING PRODUCED ON AUTOCAD
DO NOT REVISE MANUALLY

"THIS DOCUMENT IS THE PROPERTY OF NAVAL FACILITIES ENGINEERING COMMAND, PREPARED BY TETRA TECH ENGINEERING CORPORATION PC, AND IS PROVIDED UPON THE CONDITION THAT IT WILL NOT BE REPRODUCED, COPIED, OR ISSUED TO A THIRD PARTY, AND WILL BE USED SOLELY FOR THE ORIGINAL INTENDED PURPOSE AND SOLELY FOR THE EXECUTION OR REVIEW OF THE ENGINEERING CONSTRUCTION OF THE PROJECT".

IT IS A VIOLATION OF THE NEW YORK STATE EDUCATION LAW, ARTICLE 145, FOR ANY PERSON, UNLESS UNDER THE DIRECTION OF A NEW YORK STATE LICENSED PROFESSIONAL ENGINEER, TO ALTER AN ITEM ON THIS DOCUMENT IN ANY WAY.

ISSUED FOR BID - FEBRUARY 2026

NAVFAC

STATE OF NEW YORK
MICHAEL THOMAS HOGAN
044194
4/24/26

TETRA TECH
www.tetratech.com
4400 CORPORATION LANE, SUITE 300
VIRGINIA BEACH, VA 23462
PHONE: (757) 461-3258 FAX: (757) 461-4148
A/E INFO

APPROVED
FOR COMMANDER NAVFAC
ACTIVITY
As per document from Nicole Cawana, NAVFAC MIDLANT PLL/EV3
SATISFACTORY TO DATE 04/24/2026
DES JJK DRW JJK CHK WS
PM/DM
BRANCH MANAGER
CHIEF ENG/ARCH
FIRE PROTECTION

NAVAL FACILITIES ENGINEERING SYSTEMS COMMAND - MID - ATLANTIC
NAVAL INDUSTRIAL RESERVE ORDNANCE PLANT
NAVAL WEAPONS INDUSTRIAL RESERVE PLANT BETHPAGE, NEW YORK
PHASE III - TREATMENT PLANT
IOP-2 CONTROL TERMINAL DETAILS

SCALE: AS NOTED
EPROJECT NO.: -
CONSTR. CONTR. NO.
NAVFAC DRAWING NO. ##
SHEET OF -
EI622

UNCLASSIFIED

FILE NAME: Y:\03-Projects\Federal\NAVFAC\112G08005_W24_PHASE III OWTP-2023\3. Working Files\Drawings\ARC\EI620 - EI622.dwg LAYOUT NAME: EI622 PLOTTED: Tuesday, April 21, 2026 - 7:53am USER: Bill.Stonebraker

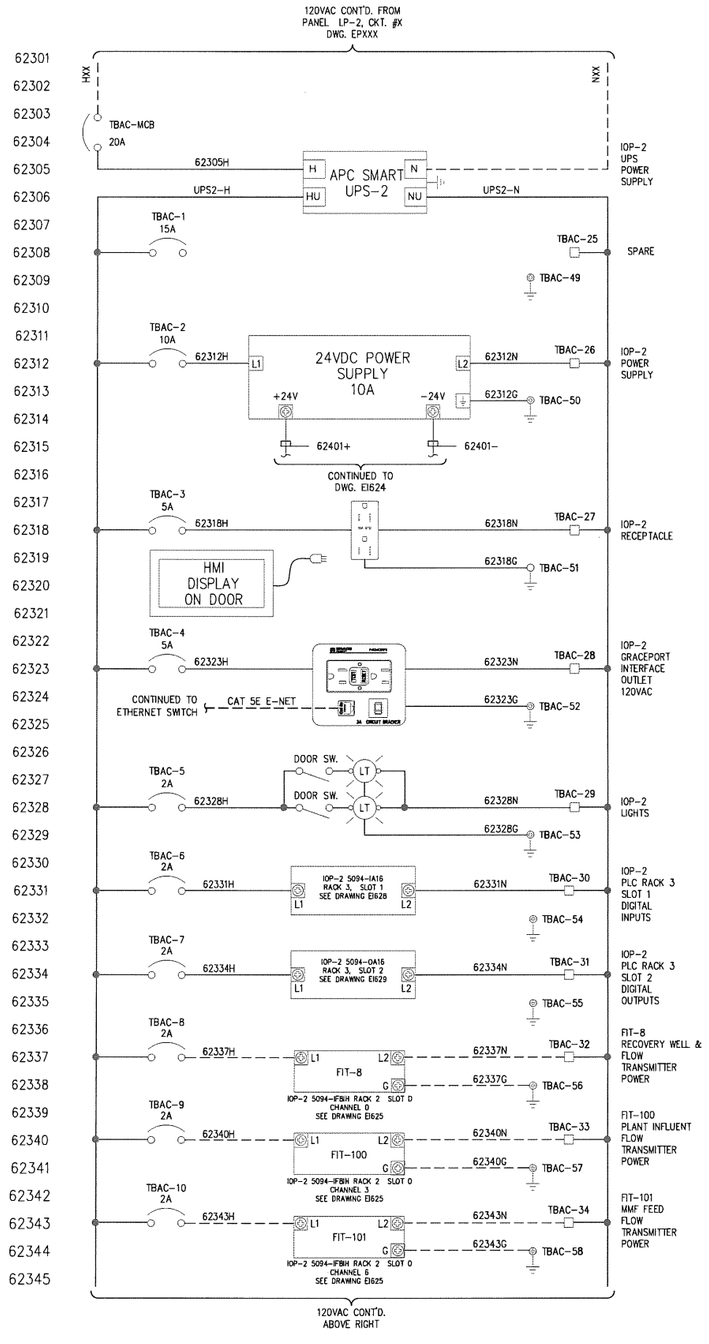

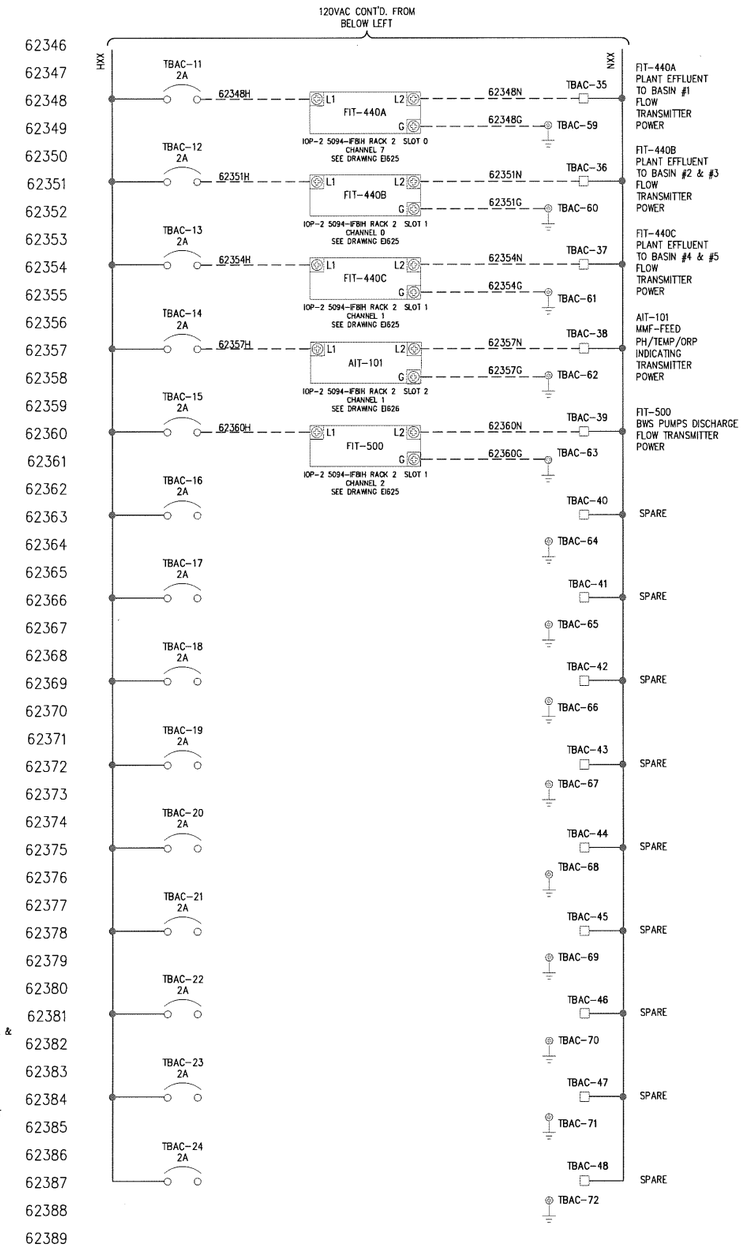

LEGEND:

———— INTERNAL PANEL WIRING (BY PANEL FABRICATOR)

– – – – – – EXTERNAL PANEL WIRING (BY ELECTRICAL CONTRACTOR)

REFERENCE DRAWINGS:

EI620	IOP-2 LAYOUT PANEL & B.O.M
EI621	IOP-2 CONTROL SUB-PANEL LAYOUT & B.O.M
EI622	IOP-2 CONTROL PANEL TERMINAL DETAILS
EI624	IOP-2 CONTROL PANEL 24VDC POWER LADDER
EI625	IOP-2 CONTROL PANEL RACK 2 SLOTS 0 & 1 WIRING
EI626	IOP-2 CONTROL PANEL RACK 2 SLOTS 2 & 3 WIRING
EI627	IOP-2 CONTROL PANEL RACK 2 SLOTS 4 & 5 WIRING
EI628	IOP-2 CONTROL PANEL RACK 3 SLOTS 0 & 1 WIRING
EI629	IOP-2 CONTROL PANEL RACK 3 SLOTS 2 WIRING
TN601	CONTROL SYSTEM ARCHITECTURE

THIS DRAWING PRODUCED ON AUTOCAD DO NOT REVISE MANUALLY

"THIS DOCUMENT IS THE PROPERTY OF NAVAL FACILITIES ENGINEERING COMMAND, PREPARED BY TETRA TECH ENGINEERING CORPORATION PC, AND IS PROVIDED UPON THE CONDITION THAT IT WILL NOT BE REPRODUCED, COPIED, OR ISSUED TO A THIRD PARTY, AND WILL BE USED SOLELY FOR THE ORIGINAL INTENDED PURPOSE AND SOLELY FOR THE EXECUTION OR REVIEW OF THE ENGINEERING CONSTRUCTION OF THE PROJECT".

IT IS A VIOLATION OF THE NEW YORK STATE EDUCATION LAW, ARTICLE 145, FOR ANY PERSON, UNLESS UNDER THE DIRECTION OF A NEW YORK STATE LICENSED PROFESSIONAL ENGINEER, TO ALTER AN ITEM ON THIS DOCUMENT IN ANY WAY.

ISSUED FOR BID - FEBRUARY 2026

NAVFAC

STATE OF NEW YORK — LICENSED PROFESSIONAL ENGINEER — 080336 — 4/24/26

TETRA TECH
www.tetratech.com
4433 CORPORATION LANE, SUITE 300
VIRGINIA BEACH, VA 23462
PHONE: (757) 461-3768 FAX: (757) 461-4148
A/E INFO

APPROVED
TOR COMMANDER NAVFAC

ACTIVITY: As per document from Nicole Cowand, NAVFAC MIDLANT PLL/EV3.

SATISFACTORY TO	DATE 04/24/2026
DES JJK	DRW JJK CHK WS
PM/DM	..
BRANCH MANAGER	..
CHIEF ENG/ARCH	..
FIRE PROTECTION	.

NAVAL FACILITIES ENGINEERING SYSTEMS COMMAND - MID - ATLANTIC
RWO3
NAVAL WEAPONS INDUSTRIAL RESERVE PLANT BETHPAGE, NEW YORK
NAVAL INDUSTRIAL RESERVE ORDNANCE PLANT
PHASE III - TREATMENT PLANT
IOP-2 CONTROL PANEL 120VAC POWER LADDER

SCALE:	AS NOTED
EPROJECT NO.:	-
CONSTR. CONTR. NO.	
NAVFAC DRAWING NO.	##
SHEET	OF -

EI623

FILE NAME: Y:\03-Projects\Federal\NAVFAC\112089005_WE24_PHASE III GWTP_2023\3. Working Files\Drawings\AbC\EI623 - EI629.dwg LAYOUT NAME: EI623 PLOTTED: Tuesday, April 21, 2026 - 7:55am USER: Bill.Stenebroker

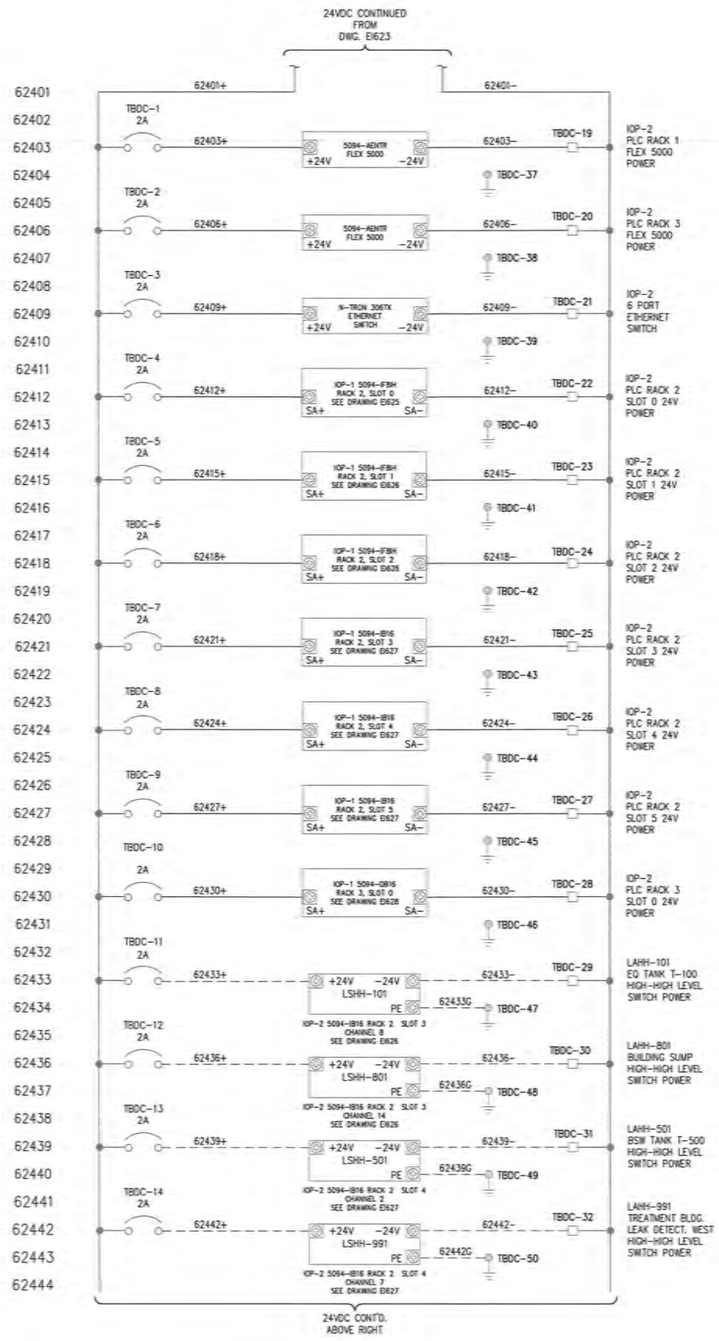

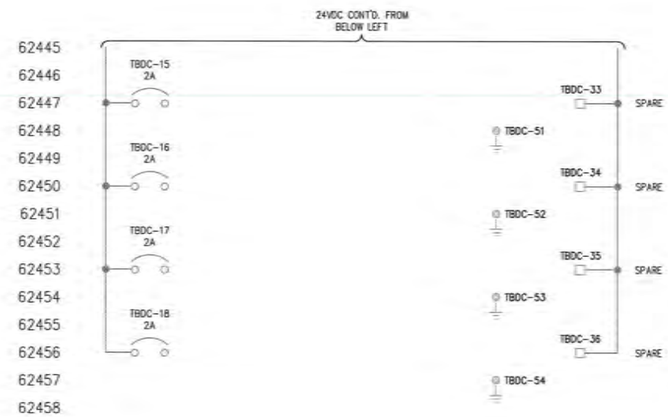

LEGEND:

——— INTERNAL PANEL WIRING (BY PANEL FABRICATOR)

– – – – – – EXTERNAL PANEL WIRING (BY ELECTRICAL CONTRACTOR)

REFERENCE DRAWINGS:

EI620	IOP-2 LAYOUT PANEL & B.O.M
EI621	IOP-2 CONTROL SUB-PANEL LAYOUT & B.O.M
EI622	IOP-2 CONTROL PANEL TERMINAL DETAILS
EI623	IOP-2 CONTROL PANEL 120VAC POWER LADDER
EI625	IOP-2 CONTROL PANEL RACK 2 SLOTS 0 & 1 WIRING
EI626	IOP-2 CONTROL PANEL RACK 2 SLOTS 2 & 3 WIRING
EI627	IOP-2 CONTROL PANEL RACK 2 SLOTS 4 & 5 WIRING
EI628	IOP-2 CONTROL PANEL RACK 3 SLOTS 0 & 1 WIRING
EI629	IOP-2 CONTROL PANEL RACK 3 SLOTS 2 WIRING
TN601	CONTROL SYSTEM ARCHITECTURE

THIS DRAWING PRODUCED ON AUTOCAD DO NOT REVISE MANUALLY

"THIS DOCUMENT IS THE PROPERTY OF NAVAL FACILITIES ENGINEERING COMMAND, PREPARED BY TETRA TECH ENGINEERING CORPORATION PC, AND IS PROVIDED UPON THE CONDITION THAT IT WILL NOT BE REPRODUCED, COPIED, OR ISSUED TO A THIRD PARTY, AND WILL BE USED SOLELY FOR THE ORIGINAL INTENDED PURPOSE AND SOLELY FOR THE EXECUTION OR REVIEW OF THE ENGINEERING CONSTRUCTION OF THE PROJECT".

IT IS A VIOLATION OF THE NEW YORK STATE EDUCATION LAW, ARTICLE 145, FOR ANY PERSON, UNLESS UNDER THE DIRECTION OF A NEW YORK STATE LICENSED PROFESSIONAL ENGINEER, TO ALTER AN ITEM ON THIS DOCUMENT IN ANY WAY.

ISSUED FOR BID - FEBRUARY 2026

NAVFAC

STATE OF NEW YORK — LICENSED PROFESSIONAL ENGINEER — 4/24/26

TETRA TECH
www.tetratech.com
4433 CORPORATION LANE, SUITE 300
VIRGINIA BEACH, VA 23462
PHONE: (757) 461-3708 FAX: (757) 461-4149
A/E INFO

APPROVED
FOR COMMANDER NAVFAC
ACTION: As per document from Nicole Cowand, NAVFAC MIDLANT PL/DCI
SATISFACTORY TO: DATE 04/24/2026
DES JJK | DRW JJK | CHK WS
PM/DM
BRANCH MANAGER
CHIEF ENG/ARCH
FIRE PROTECTION

NAVAL FACILITIES ENGINEERING SYSTEMS COMMAND - MID - ATLANTIC
NAVAL INDUSTRIAL RESERVE ORDNANCE PLANT
NAVAL WEAPONS INDUSTRIAL RESERVE PLANT BETHPAGE, NEW YORK
PHASE III - TREATMENT PLANT
IOP-2 CONTROL PANEL 24VDC POWER LADDER

SCALE: AS NOTED
EPROJECT NO.:
CONSTR. CONTR. NO.
NAVFAC DRAWING NO. ##
SHEET OF
EI624

FILE NAME: Y:\03-Projects\Federal\NAVFAC\112026R005_NY24_PHASE III GWTP_2023\3. Working Files\Drawings\IAC\EI623 - EI629.dwg LAYOUT NAME: EI624 PLOTTED: Tuesday, April 21, 2026 - 7:55am USER: Bill.Stonebraker

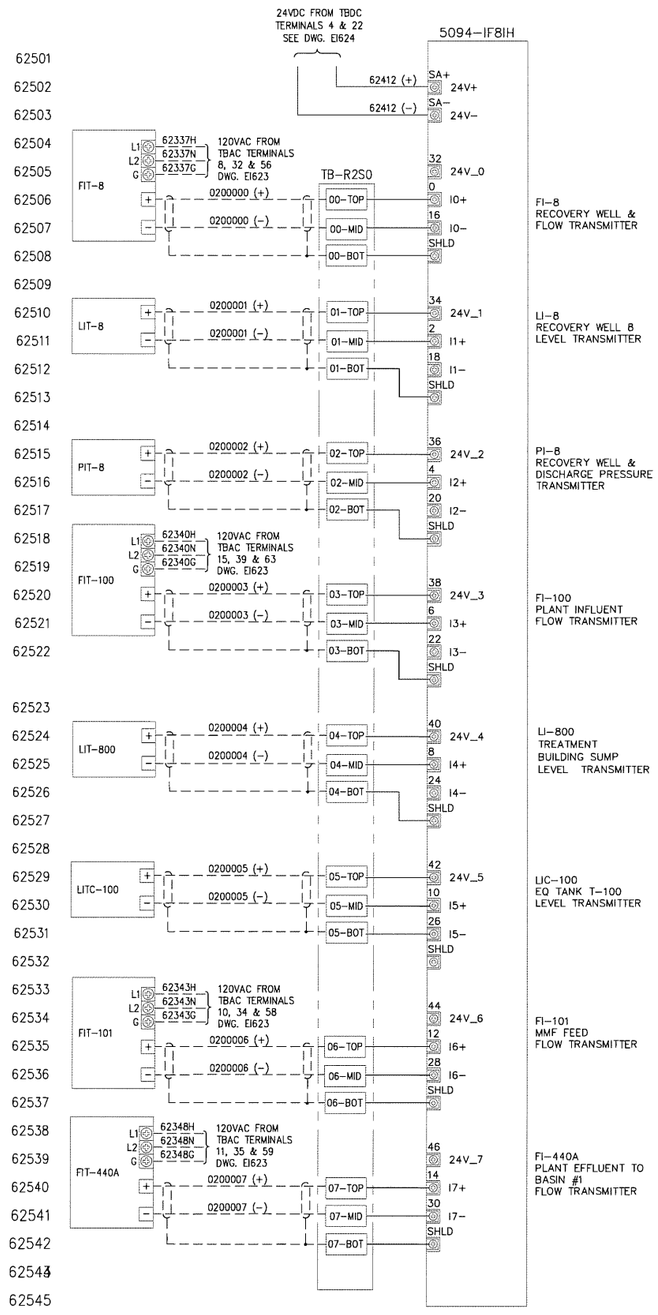

A-B PT# 5094-IF8IH
AI, 4-20mA, HART, 8CHN
RACK 2, SLOT 0

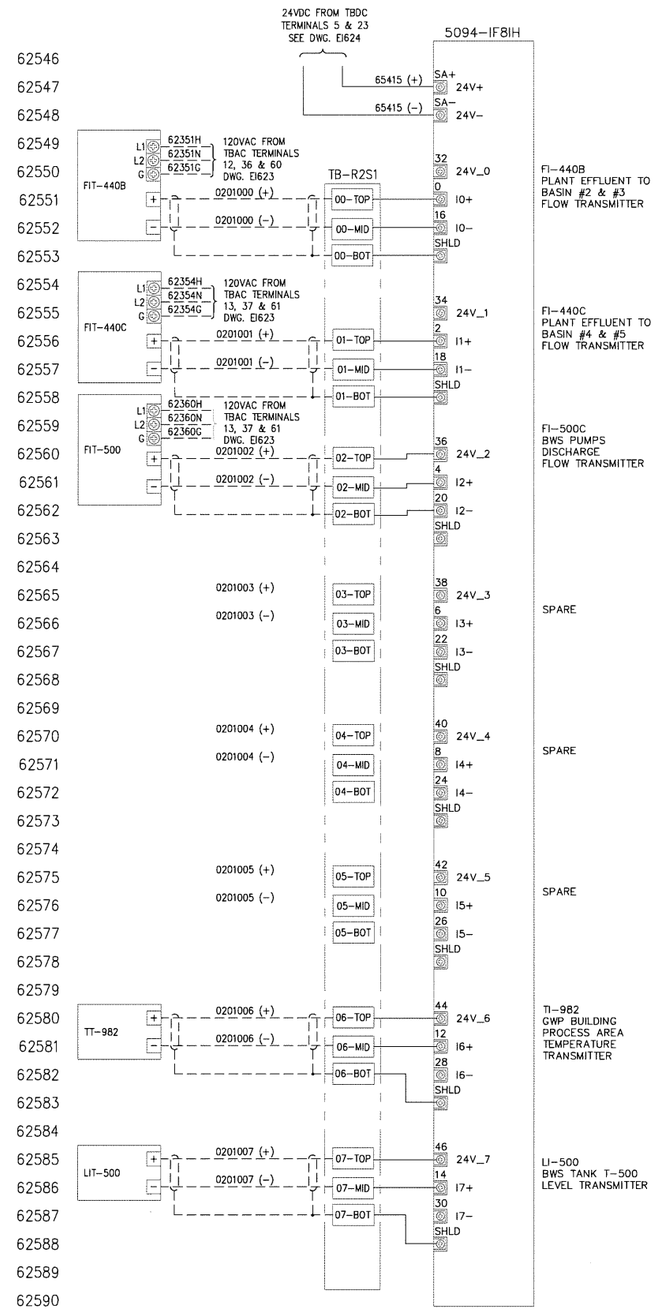

A-B PT# 5094-IF8IH
AI, 4-20mA, HART, 8CHN
RACK 2, SLOT 1

LEGEND:

——— INTERNAL PANEL WIRING (BY PANEL FABRICATOR)

- - - - - - EXTERNAL PANEL WIRING (BY ELECTRICAL CONTRACTOR)

REFERENCE DRAWINGS:

EI620	IOP-2 LAYOUT PANEL & B.O.M
EI621	IOP-2 CONTROL SUB-PANEL LAYOUT & B.O.M
EI622	IOP-2 CONTROL PANEL TERMINAL DETAILS
EI623	IOP-2 CONTROL PANEL 120VAC POWER LADDER
EI624	IOP-2 CONTROL PANEL 24VDC POWER LADDER
EI626	IOP-2 CONTROL PANEL RACK 2 SLOTS 2 & 3 WIRING
EI627	IOP-2 CONTROL PANEL RACK 2 SLOTS 4 & 5 WIRING
EI628	IOP-2 CONTROL PANEL RACK 3 SLOTS 0 & 1 WIRING
EI629	IOP-2 CONTROL PANEL RACK 3 SLOTS 2 WIRING
TN601	CONTROL SYSTEM ARCHITECTURE

THIS DRAWING PRODUCED ON AUTOCAD
DO NOT REVISE MANUALLY

"THIS DOCUMENT IS THE PROPERTY OF NAVAL FACILITIES ENGINEERING COMMAND, PREPARED BY TETRA TECH ENGINEERING CORPORATION PC, AND IS PROVIDED UPON THE CONDITION THAT IT WILL NOT BE REPRODUCED, COPIED, OR ISSUED TO A THIRD PARTY, AND WILL BE USED SOLELY FOR THE ORIGINAL INTENDED PURPOSE AND SOLELY FOR THE EXECUTION OR REVIEW OF THE ENGINEERING CONSTRUCTION OF THE PROJECT".

IT IS A VIOLATION OF THE NEW YORK STATE EDUCATION LAW, ARTICLE 145, FOR ANY PERSON, UNLESS UNDER THE DIRECTION OF A NEW YORK STATE LICENSED PROFESSIONAL ENGINEER, TO ALTER AN ITEM ON THIS DOCUMENT IN ANY WAY.

ISSUED FOR BID - FEBRUARY 2026

TETRA TECH
www.tetratech.com
4433 CORPORATION LANE, SUITE 300
VIRGINIA BEACH, VA 23462
PHONE: (757) 461-3768 FAX: (757) 461-4148
A/E W/O

APPROVED
FOR COMMANDER NAVFAC
ACTIVITY
As per document from Nicole Cowand, NAVFAC MIDLANT PLL/EV3.
SATISFACTORY TO DATE 04/24/2025
DES JJK DRW JJK CHK WS
PM/DM
BRANCH MANAGER
CHIEF ENG/ARCH
FIRE PROTECTION

NAVAL FACILITIES ENGINEERING SYSTEMS COMMAND - MID - ATLANTIC
NAVAL INDUSTRIAL RESERVE ORDNANCE PLANT
NAVAL WEAPONS INDUSTRIAL RESERVE PLANT BETHPAGE, NEW YORK
PHASE III - TREATMENT PLANT
IOP-2 CONTROL PANEL RACK 2 SLOTS 0 & 1

SCALE: AS NOTED
EPROJECT NO.:
CONSTR. CONTR. NO.
NAVFAC DRAWING NO. ##
SHEET OF
EI625

FILE NAME: Y:\03-Projects\Federal\NAVFAC\112G08025_WE24_PHASE III GWTP_2023\3. Working Files\Drawings\AC\EI623 - EI629.dwg LAYOUT NAME: EI625 PLOTTED: Tuesday, April 21, 2026 - 7:56am USER: Bill.Stonebroker

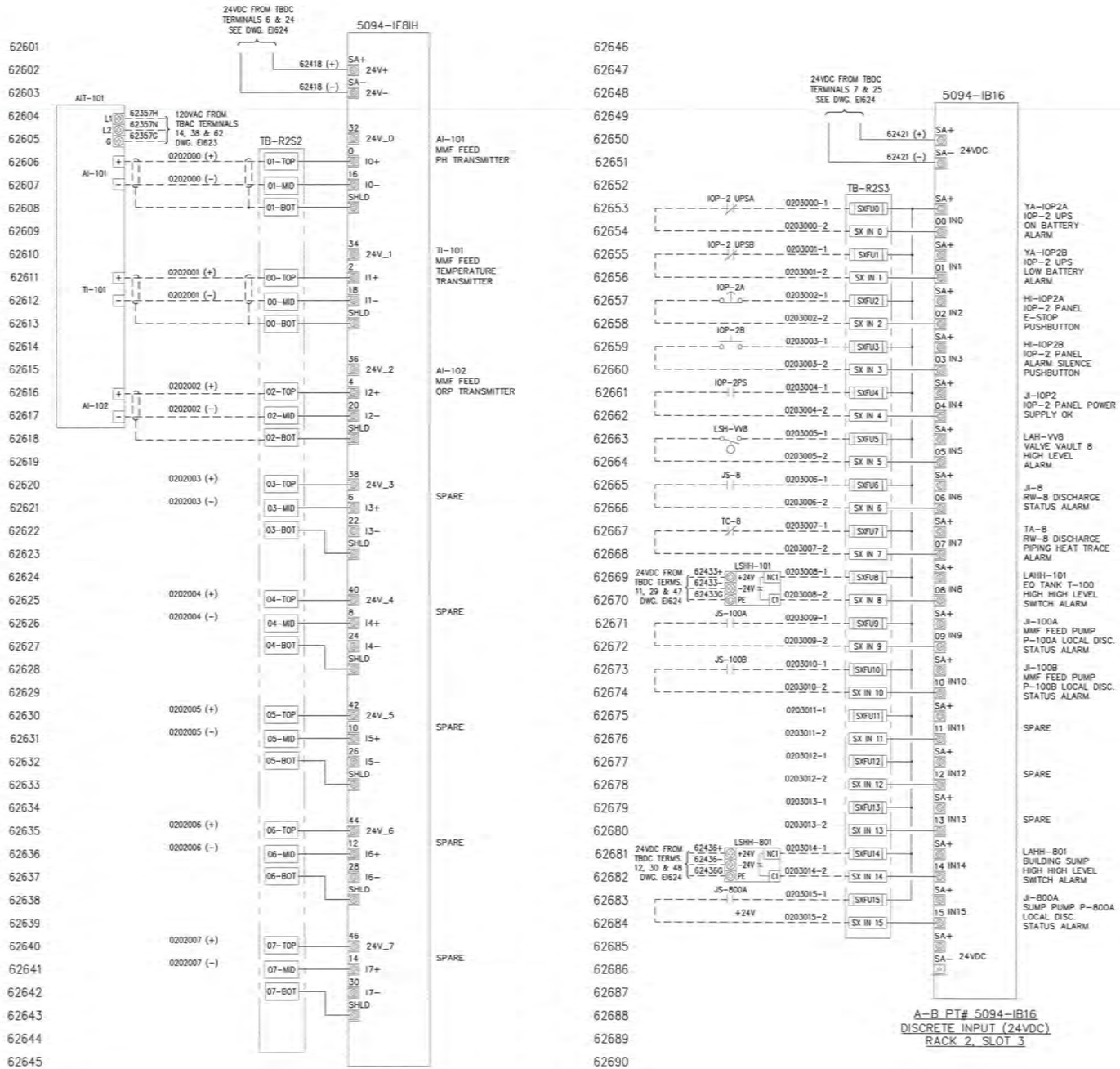

A-B PT# 5094-IF8IH
AI, 4-20mA, HART, 8CHN
RACK 2, SLOT 2

A-B PT# 5094-IB16
DISCRETE INPUT (24VDC)
RACK 2, SLOT 3

LEGEND:

——— INTERNAL PANEL WIRING (BY PANEL FABRICATOR)

- - - - - - EXTERNAL PANEL WIRING (BY ELECTRICAL CONTRACTOR)

REFERENCE DRAWINGS:

EI620	IOP-2 LAYOUT PANEL & B.O.M
EI621	IOP-2 CONTROL SUB-PANEL LAYOUT & B.O.M
EI622	IOP-2 CONTROL PANEL TERMINAL DETAILS
EI623	IOP-2 CONTROL PANEL 120VAC POWER LADDER
EI624	IOP-2 CONTROL PANEL 24VDC POWER LADDER
EI625	IOP-2 CONTROL PANEL RACK 2 SLOTS 0 & 1 WIRING
EI627	IOP-2 CONTROL PANEL RACK 2 SLOTS 4 & 5 WIRING
EI628	IOP-2 CONTROL PANEL RACK 3 SLOTS 0 & 1 WIRING
EI629	IOP-2 CONTROL PANEL RACK 3 SLOTS 2 WIRING
TN601	CONTROL SYSTEM ARCHITECTURE

THIS DRAWING PRODUCED ON AUTOCAD DO NOT REVISE MANUALLY

"THIS DOCUMENT IS THE PROPERTY OF NAVAL FACILITIES ENGINEERING COMMAND, PREPARED BY TETRA TECH ENGINEERING CORPORATION PC, AND IS PROVIDED UPON THE CONDITION THAT IT WILL NOT BE REPRODUCED, COPIED, OR ISSUED TO A THIRD PARTY, AND WILL BE USED SOLELY FOR THE ORIGINAL INTENDED PURPOSE AND SOLELY FOR THE EXECUTION OR REVIEW OF THE ENGINEERING CONSTRUCTION OF THE PROJECT".

IT IS A VIOLATION OF THE NEW YORK STATE EDUCATION LAW, ARTICLE 145, FOR ANY PERSON, UNLESS UNDER THE DIRECTION OF A NEW YORK STATE LICENSED PROFESSIONAL ENGINEER, TO ALTER AN ITEM ON THIS DOCUMENT IN ANY WAY.

ISSUED FOR BID - FEBRUARY 2026

NAVFAC

STATE OF NEW YORK
MICHAEL KENNETH SABATO
PE 085364
4/24/26

TETRA TECH
www.tetratech.com
4433 CORPORATION LANE, SUITE 300
VIRGINIA BEACH, VA 23462
PHONE: (757) 490-3358 FAX: (757) 490-4148
A/E INFO

APPROVED
FOR COMMANDER NAVFAC
ACTIVITY: As per document from Nicole Cowans, NAVFAC MIDLANT PLL/EV3
SATISFACTORY TO DATE 04/24/2026
DES JJK DRW JJK CHK WS
PM/DM
BRANCH MANAGER
CHIEF ENG/ARCH
FIRE PROTECTION

NAVAL FACILITIES ENGINEERING SYSTEMS COMMAND - MID - ATLANTIC
NAVAL INDUSTRIAL RESERVE ORDNANCE PLANT
FIRO3
NAVAL WEAPONS INDUSTRIAL RESERVE PLANT BETHPAGE, NEW YORK
PHASE III - TREATMENT PLANT
IOP-2 CONTROL PANEL RACK 2 SLOTS 2 & 3

SCALE: AS NOTED
EPROJECT NO.: -
CONSTR. CONTR. NO.
NAVFAC DRAWING NO. ##
SHEET OF -
EI626

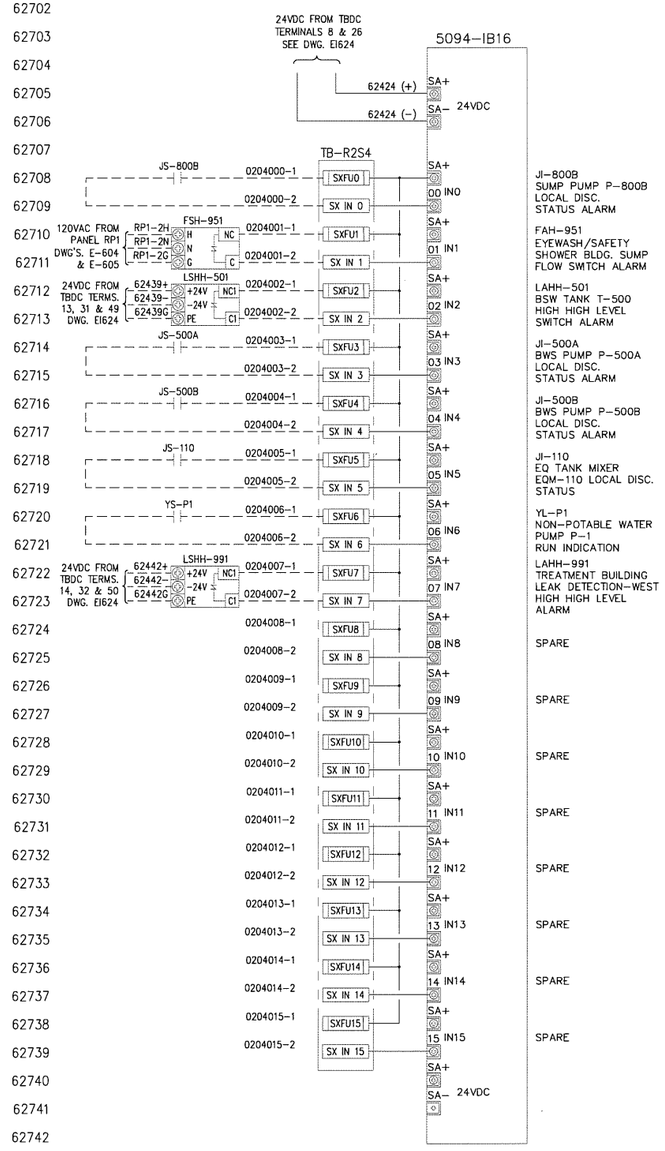

A-B PT# 5094-IB16
DISCRETE INPUT (24VDC)
RACK 2, SLOT 4

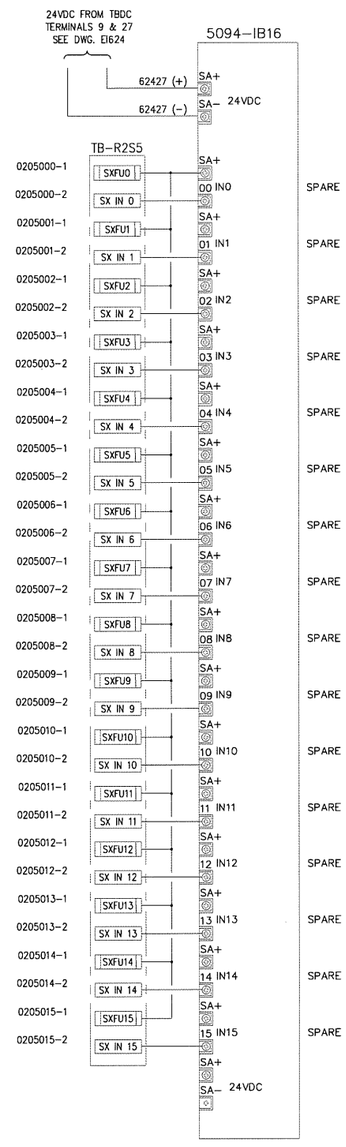

A-B PT# 5094-IB16
DISCRETE INPUT (24VDC)
RACK 2, SLOT 5

LEGEND:

———————— INTERNAL PANEL WIRING (BY PANEL FABRICATOR)

– – – – – – EXTERNAL PANEL WIRING (BY ELECTRICAL CONTRACTOR)

REFERENCE DRAWINGS:

EI620	IOP-2 LAYOUT PANEL & B.O.M
EI621	IOP-2 CONTROL SUB-PANEL LAYOUT & B.O.M
EI622	IOP-2 CONTROL PANEL TERMINAL DETAILS
EI623	IOP-2 CONTROL PANEL 120VAC POWER LADDER
EI624	IOP-2 CONTROL PANEL 24VDC POWER LADDER
EI625	IOP-2 CONTROL PANEL RACK 2 SLOTS 0 & 1 WIRING
EI626	IOP-2 CONTROL PANEL RACK 2 SLOTS 2 & 3 WIRING
EI628	IOP-2 CONTROL PANEL RACK 3 SLOTS 0 & 1 WIRING
EI629	IOP-2 CONTROL PANEL RACK 3 SLOTS 2 WIRING
TN601	CONTROL SYSTEM ARCHITECTURE

THIS DRAWING PRODUCED ON AUTOCAD
DO NOT REVISE MANUALLY

"THIS DOCUMENT IS THE PROPERTY OF NAVAL FACILITIES ENGINEERING COMMAND, PREPARED BY TETRA TECH ENGINEERING CORPORATION PC, AND IS PROVIDED UPON THE CONDITION THAT IT WILL NOT BE REPRODUCED, COPIED, OR ISSUED TO A THIRD PARTY, AND WILL BE USED SOLELY FOR THE ORIGINAL INTENDED PURPOSE AND SOLELY FOR THE EXECUTION OR REVIEW OF THE ENGINEERING CONSTRUCTION OF THE PROJECT".

IT IS A VIOLATION OF THE NEW YORK STATE EDUCATION LAW, ARTICLE 145, FOR ANY PERSON, UNLESS UNDER THE DIRECTION OF A NEW YORK STATE LICENSED PROFESSIONAL ENGINEER, TO ALTER AN ITEM ON THIS DOCUMENT IN ANY WAY.

ISSUED FOR BID - FEBRUARY 2026

NAVFAC

STATE OF NEW YORK
LICENSED PROFESSIONAL ENGINEER
080336
4/24/26

TETRA TECH
www.tetratech.com
4433 CORPORATION LANE, SUITE 300
VIRGINIA BEACH, VA 23462
PHONE: (757) 401-3708 FAX: (757) 461-4148
A/E INFO

APPROVED
FOR COMMANDER NAVFAC
ACTIVITY
As per document from Nicole Cowand, NAVFAC MIDLANT PLL/EV3.
SATISFACTORY TO DATE 04/24/2026
DES JJK DRW JJK CHK WS
PM/DM
BRANCH MANAGER
CHIEF ENG/ARCH
FIRE PROTECTION

NAVAL FACILITIES ENGINEERING SYSTEMS COMMAND - MID - ATLANTIC
RW09
NAVAL WEAPONS INDUSTRIAL RESERVE PLANT BETHPAGE, NEW YORK
NAVAL INDUSTRIAL RESERVE ORDNANCE PLANT
PHASE III - TREATMENT PLANT

IOP-2 CONTROL PANEL RACK 2 SLOTS 4 & 5

SCALE: AS NOTED
EPROJECT NO.: -
CONSTR. CONTR. NO.
NAVFAC DRAWING NO. ##
SHEET OF -
EI627

FILE NAME: Y:\03-Projects\Federal\NAVFAC\120208005_WE24_PHASE III GWTP_2023\3. Working Files\Drawings\Arc\EI623 - EI629.dwg LAYOUT NAME: EI627 PLOTTED: Tuesday, April 21, 2026 - 7:56am USER: Bill.Stonebraker

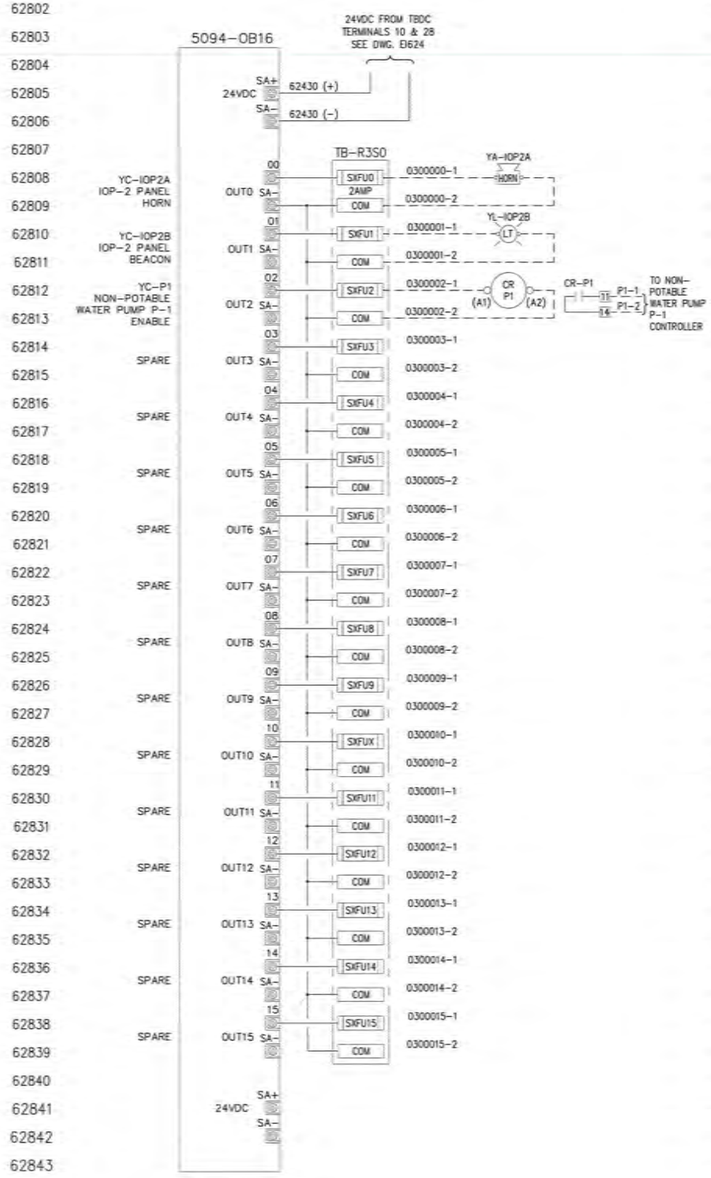

A-B PT# 5094-OB16
DISCRETE OUTPUT (24VDC)
RACK 3, SLOT 0

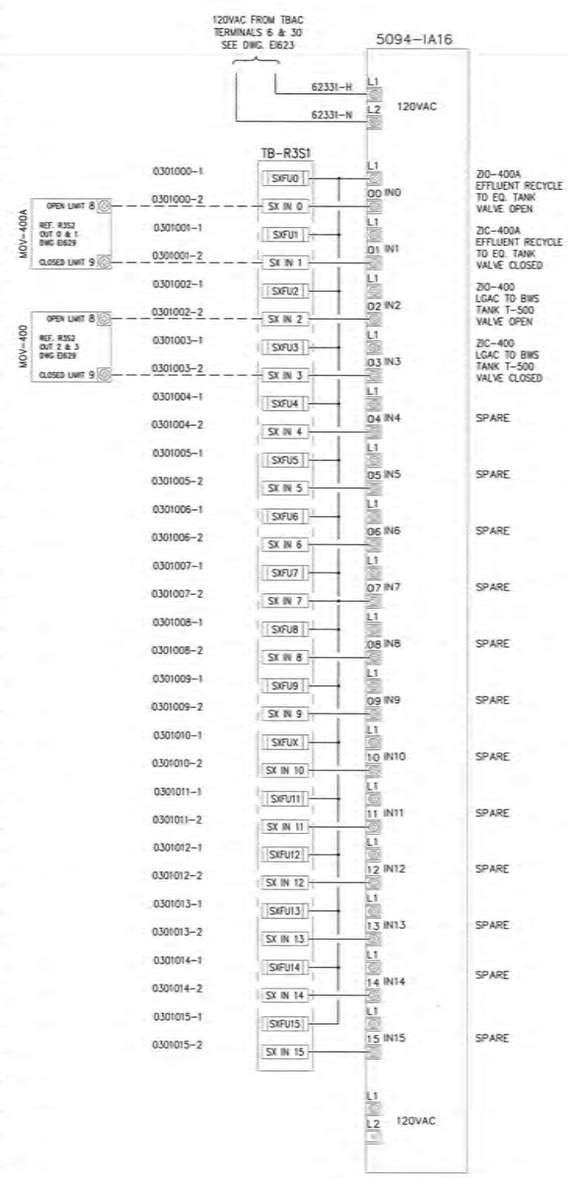

A-B PT# 5094-IA16
DISCRETE INPUT (120VAC)
RACK 3, SLOT 1

LEGEND:

——————— INTERNAL PANEL WIRING (BY PANEL FABRICATOR)

- - - - - - EXTERNAL PANEL WIRING (BY ELECTRICAL CONTRACTOR)

REFERENCE DRAWINGS:

EI620	IOP-2 LAYOUT PANEL & B.O.M
EI621	IOP-2 CONTROL SUB-PANEL LAYOUT & B.O.M
EI622	IOP-2 CONTROL PANEL TERMINAL DETAILS
EI623	IOP-2 CONTROL PANEL 120VAC POWER LADDER
EI624	IOP-2 CONTROL PANEL 24VDC POWER LADDER
EI625	IOP-2 CONTROL PANEL RACK 2 SLOTS 0 & 1 WIRING
EI626	IOP-2 CONTROL PANEL RACK 2 SLOTS 2 & 3 WIRING
EI627	IOP-2 CONTROL PANEL RACK 2 SLOTS 4 & 5 WIRING
EI629	IOP-2 CONTROL PANEL RACK 3 SLOTS 2 WIRING
TN601	CONTROL SYSTEM ARCHITECTURE

THIS DRAWING PRODUCED ON AUTOCAD DO NOT REVISE MANUALLY

"THIS DOCUMENT IS THE PROPERTY OF NAVAL FACILITIES ENGINEERING COMMAND, PREPARED BY TETRA TECH ENGINEERING CORPORATION PC, AND IS PROVIDED UPON THE CONDITION THAT IT WILL NOT BE REPRODUCED, COPIED, OR ISSUED TO A THIRD PARTY, AND WILL BE USED SOLELY FOR THE ORIGINAL INTENDED PURPOSE AND SOLELY FOR THE EXECUTION OR REVIEW OF THE ENGINEERING CONSTRUCTION OF THE PROJECT".

IT IS A VIOLATION OF THE NEW YORK STATE EDUCATION LAW, ARTICLE 145, FOR ANY PERSON, UNLESS UNDER THE DIRECTION OF A NEW YORK STATE LICENSED PROFESSIONAL ENGINEER, TO ALTER AN ITEM ON THIS DOCUMENT IN ANY WAY.

ISSUED FOR BID - FEBRUARY 2026

NAVFAC

STATE OF NEW YORK 4/24/26

TETRA TECH
www.tetratech.com
4403 CORPORATION LANE, SUITE 300
VIRGINIA BEACH, VA 23462
PHONE: (757)-461-3700 FAX: (757)-461-4148
A/E INFO

APPROVED
FOR COMMANDER NAVFAC

ACTIVITY: As per document from Nicole Cowand, NAVFAC MIDLANT PCL/EV3

SATISFACTORY TO: DATE 04/24/2026

DES JJK | DRW JJK | CHK WS

PM/DM
BRANCH MANAGER
CHIEF ENG/ARCH
FIRE PROTECTION

NAVAL FACILITIES ENGINEERING SYSTEMS COMMAND - MID - ATLANTIC
NAVAL INDUSTRIAL RESERVE ORDNANCE PLANT
NAVAL WEAPONS INDUSTRIAL RESERVE PLANT BETHPAGE, NEW YORK
PHASE III - TREATMENT PLANT
IOP-2 CONTROL PANEL RACK 3 SLOTS 0 & 1

SCALE: AS NOTED
EPROJECT NO.:
CONSTR. CONTR. NO.
NAVFAC DRAWING NO. ##
SHEET OF
EI628

UNCLASSIFIED

FILE NAME: Y:\03-Projects\Federal\NAVFAC\120080005_MK24_PHASE III GWTP_2023\3. Working Files\Drawings\IAC\EI623 - EI629.dwg LAYOUT NAME: EI628 PLOTTED: Tuesday, April 21, 2026 - 7:37am USER: Bill.Stoneberker

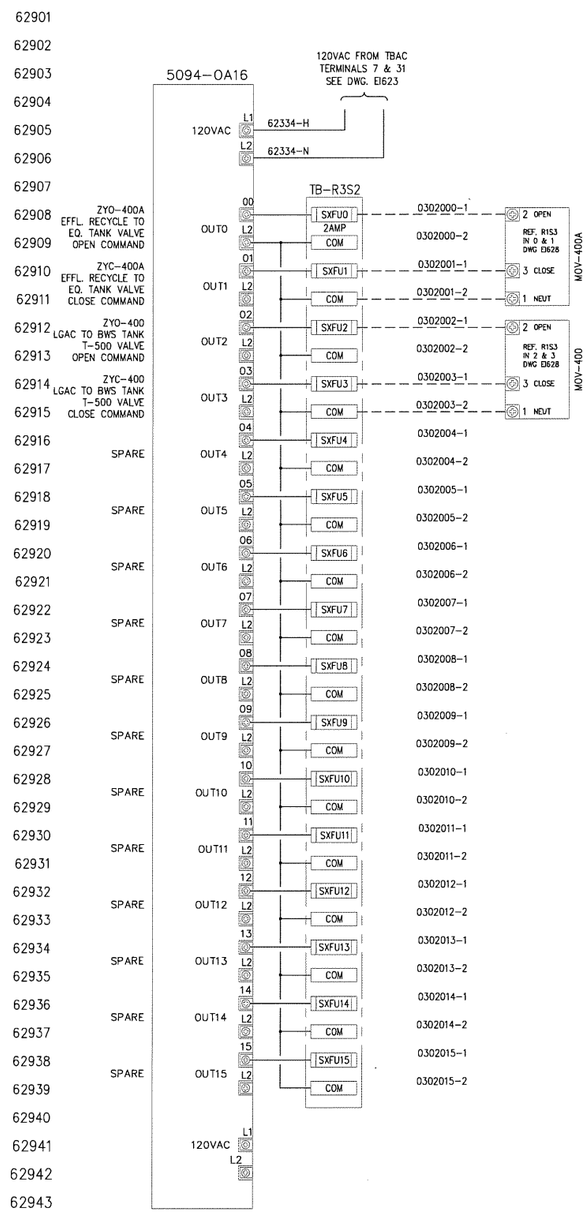

A-B PT# 5094-OA16
DISCRETE OUTPUT (120VAC)
RACK 3, SLOT 2

LEGEND:

———— INTERNAL PANEL WIRING (BY PANEL FABRICATOR)

– – – – – – EXTERNAL PANEL WIRING (BY ELECTRICAL CONTRACTOR)

REFERENCE DRAWINGS:

EI620	IOP-2 LAYOUT PANEL & B.O.M
EI621	IOP-2 CONTROL SUB-PANEL LAYOUT & B.O.M
EI622	IOP-2 CONTROL PANEL TERMINAL DETAILS
EI623	IOP-2 CONTROL PANEL 120VAC POWER LADDER
EI624	IOP-2 CONTROL PANEL 24VDC POWER LADDER
EI625	IOP-2 CONTROL PANEL RACK 2 SLOTS 0 & 1 WIRING
EI626	IOP-2 CONTROL PANEL RACK 2 SLOTS 2 & 3 WIRING
EI627	IOP-2 CONTROL PANEL RACK 2 SLOTS 4 & 5 WIRING
EI628	IOP-2 CONTROL PANEL RACK 3 SLOTS 0 & 1 WIRING
TN601	CONTROL SYSTEM ARCHITECTURE

THIS DRAWING PRODUCED ON AUTOCAD
DO NOT REVISE MANUALLY

"THIS DOCUMENT IS THE PROPERTY OF NAVAL FACILITIES ENGINEERING COMMAND, PREPARED BY TETRA TECH ENGINEERING CORPORATION PC, AND IS PROVIDED UPON THE CONDITION THAT IT WILL NOT BE REPRODUCED, COPIED, OR ISSUED TO A THIRD PARTY, AND WILL BE USED SOLELY FOR THE ORIGINAL INTENDED PURPOSE AND SOLELY FOR THE EXECUTION OR REVIEW OF THE ENGINEERING CONSTRUCTION OF THE PROJECT".

IT IS A VIOLATION OF THE NEW YORK STATE EDUCATION LAW, ARTICLE 145, FOR ANY PERSON, UNLESS UNDER THE DIRECTION OF A NEW YORK STATE LICENSED PROFESSIONAL ENGINEER, TO ALTER AN ITEM ON THIS DOCUMENT IN ANY WAY.

ISSUED FOR BID - FEBRUARY 2026

NAVFAC

STATE OF NEW YORK
LICENSED PROFESSIONAL ENGINEER
060334

TETRA TECH
www.tetratech.com
4433 CORPORATION LANE, SUITE 300
VIRGINIA BEACH, VA 23462
PHONE: (757) 461-3766 FAX: (757) 461-4148
A/E INFO

APPROVED
FOR COMMANDER NAVFAC

ACTIVITY
As per document from Nicole Cowand, NAVFAC MIDLANT PLL/EV3.

SATISFACTORY TO DATE 04/24/2026

DES	DRW	CHK
JJK	JJK	WS

PM/DM
BRANCH MANAGER
CHIEF ENG/ARCH
FIRE PROTECTION

NAVAL FACILITIES ENGINEERING SYSTEMS COMMAND - MID - ATLANTIC
RWD29
NAVAL WEAPONS INDUSTRIAL RESERVE PLANT BETHPAGE, NEW YORK
NAVAL INDUSTRIAL RESERVE ORDNANCE PLANT
PHASE III - TREATMENT PLANT
IOP-2 CONTROL PANEL RACK 3 SLOT 2

SCALE: AS NOTED
EPROJECT NO.:
CONSTR. CONTR. NO.
NAVFAC DRAWING NO. ##
SHEET OF
EI629

FILE NAME: Y:\DJ-Projects\Federal\NAVFAC\120208005_WF24_PHASE III GWTP_2023\3. Working Files\Drawings\AE\EI623 - EI628.dwg LAYOUT NAME: EI629 PLOTTED: Tuesday, April 21, 2026 - 7:58am USER: Bill.Stonebraker

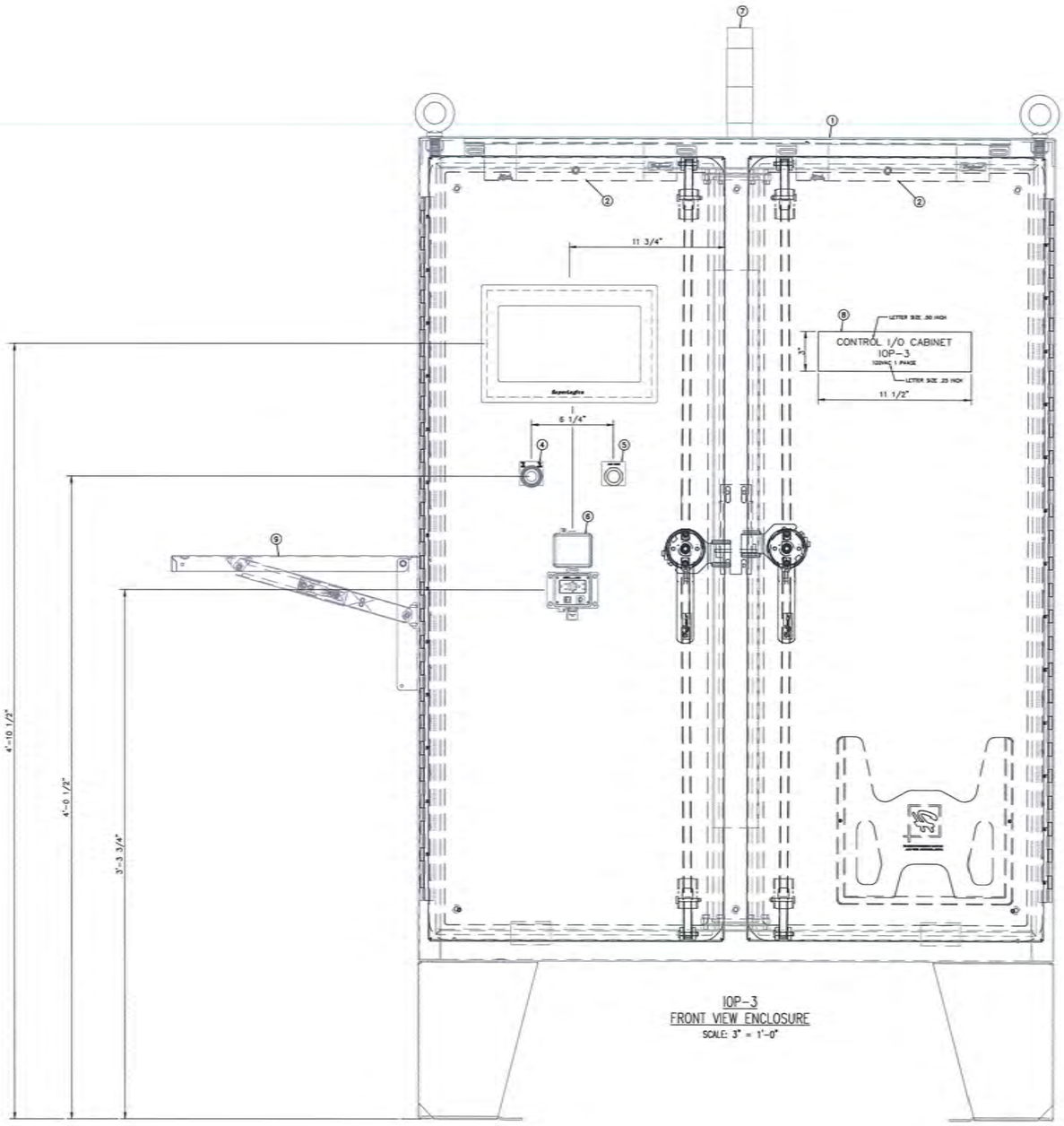

IOP-3
FRONT VIEW ENCLOSURE
SCALE: 3" = 1'-0"

PANEL BILL OF MATERIAL

ITEM	QUAN	DESCRIPTION	SUPPLIER
1	1	FREE STANDING ENCLOSURE WITH 3 POINT LATCHES & FLOOR STANDS 62"H x 48"W x 12"D, NEMA 4X HOFFMAN CAT. NO. A62H4812SSLP3PT (OR EQUAL)	PANEL SHOP
2	2	ENCLOSURE FLUORESCENT LIGHT 120VAC HOFFMAN CAT. NO. LF120V15 (OR EQUAL) POWER CORD WITH LEADS, HOFFMAN CAT. NO. LP72 (OR EQUAL) DOOR SWITCH (2) HOFFMAN CAT. NO. PLFSWD (OR EQUAL)	PANEL SHOP
3	1	OPERATOR HMI SCREEN SUPER LOGICS CAT. NO. SL-PPC-12AWHD-LLH310I-S17 (OR EQUAL)	PANEL SHOP
4	1	E-STOP PUSHBUTON PUSH PULL MAINTAINED, NON-ILLUMINATED, 1 N.C. CONTACT ALLEN-BRADLEY CAT. No. 800T-FX6D4 (OR EQUAL) LEGEND PLATE "PUSH TO STOP -PULL TO START" ALLEN BRADLEY CAT. No. 800H-W196 (OR EQUAL)	PANEL SHOP
5	1	PUSHBUTON, MOMENTARY CONTACT, W / BLACK CAP, 1 N.O. CONTACT ALLEN-BRADLEY CAT. No. 800T-A201 (OR EQUAL) CUSTOM LEGEND PLATE MARKED "ALARM SILENCE" ALLEN BRADLEY CAT. No. 800T-X559 (OR EQUAL)	PANEL SHOP
6	1	PANEL INTERFACE CONNECTOR GRACE PORT CAT. NO. P-R2-K3RF3 (OR EQUAL)	PANEL SHOP
7	1	PRE-ASSEMBLED STACK LIGHT SURFACE MOUNTED RED STEADY LED, SINGLE CIRCUIT PIEZO MODULE ALLEN BRADLEY CAT. NNO. 855EC-B24Y4P1	PANEL SHOP
8	AS REQ'D.	PHENOLIC NAMEPLATE 3"H x 11 1/2"W WHITE W/BLACK 1/2" HIGH LETTERS, & 1/4" HIGH LETTERS SEE NAMEPLATE SCHEDULE	PANEL SHOP
9	1	12" x 18" FOLDING SHELF (WHITE) HOFFMAN CAT. No. AASHF1218 (OR EQUAL)	PANEL SHOP

REFERENCE DRAWINGS:

E1630 IOP-3 LAYOUT PANEL & B.O.M
E1631 IOP-3 CONTROL SUB-PANEL LAYOUT & B.O.M
E1632 IOP-3 CONTROL PANEL TERMINAL DETAILS
E1633 IOP-3 CONTROL PANEL 120VAC POWER LADDER
E1634 IOP-3 CONTROL PANEL 24VDC POWER LADDER
E1635 IOP-3 CONTROL PANEL RACK 2 SLOTS 0 & 1 WIRING
E1636 IOP-3 CONTROL PANEL RACK 2 SLOTS 2 & 3 WIRING
E1637 IOP-3 CONTROL PANEL RACK 2 SLOTS 4 & 5 WIRING
E1638 IOP-3 CONTROL PANEL RACK 3 SLOTS 0 & 1 WIRING
E1639 IOP-3 CONTROL PANEL RACK 3 SLOTS 2 & 3 WIRING
TN601 CONTROL SYSTEM ARCHITECTURE

THIS DRAWING PRODUCED ON AUTOCAD
DO NOT REVISE MANUALLY

"THIS DOCUMENT IS THE PROPERTY OF NAVAL FACILITIES ENGINEERING COMMAND, PREPARED BY TETRA TECH ENGINEERING CORPORATION PC, AND IS PROVIDED UPON THE CONDITION THAT IT WILL NOT BE REPRODUCED, COPIED, OR ISSUED TO A THIRD PARTY, AND WILL BE USED SOLELY FOR THE ORIGINAL INTENDED PURPOSE AND SOLELY FOR THE EXECUTION OR REVIEW OF THE ENGINEERING CONSTRUCTION OF THE PROJECT".

IT IS A VIOLATION OF THE NEW YORK STATE EDUCATION LAW, ARTICLE 145, FOR ANY PERSON, UNLESS UNDER THE DIRECTION OF A NEW YORK STATE LICENSED PROFESSIONAL ENGINEER, TO ALTER AN ITEM ON THIS DOCUMENT IN ANY WAY.

ISSUED FOR BID - FEBRUARY 2026

NAVFAC

TETRA TECH
www.tetratech.com
4430 CORPORATION LANE, SUITE 350
VIRGINIA BEACH, VA 23462
PHONE: (757) 451-3795 FAX: (757) 451-6148
A/E INFO

APPROVED
FOR COMMANDER NAVFAC
ACTION
As per document from Nicole Cowand, NAVFAC MIDLANT PLL/EV3.
SATISFACTORY TO DATE 04/24/2026
DES JJK DRW JJK CHK WS
PM/DM:
BRANCH MANAGER
CHIEF ENG/ARCH:
FIRE PROTECTION

NAVAL FACILITIES ENGINEERING SYSTEMS COMMAND - MID - ATLANTIC
NAVAL INDUSTRIAL RESERVE ORDNANCE PLANT
NAVAL WEAPONS INDUSTRIAL RESERVE PLANT BETHPAGE, NEW YORK
PHASE III - TREATMENT PLANT
IOP-2 CONTROL PANEL LAYOUT & BILL OF MATERIAL

SCALE: AS NOTED
CPROJECT NO.:
CONSTR. CONTR. NO.
NAVFAC DRAWING NO.
SHEET OF
E1630

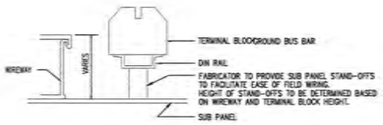

NAMEPLATE SCHEDULE

ITEM	MK NO.	LINE 1	LINE 2
A	41	TBAC	
B	41	TBDC	
C	42	RACK R4	
D	40	R4S0	
E	40	R4S1	
F	40	R4S2	
G	40	R4S3	
H	40	R4S4	
J	40	R4S5	
K	41	RACK R5	
L	40	R5S0	
M	40	R5S1	
N	41	R5S2	
P	41	TBCR	

SUB-PANEL BILL OF MATERIAL

ITEM	QUAN	DESCRIPTION	SUPPLIER
38	18	GROUNDING TERMINAL 300V ALLEN BRADLEY CAT. NO. 1492-JG3	
39	4	RELAY MODULE; NOMINAL INPUT VOLTAGE: 24 VDC; 2 CHANGEOVER CONTACT; LIMITING CONTINUOUS CURRENT: 8 A; WITH MAN. OPER.; RED STATUS INDICATOR WAGO 788-312 (OR EQUAL)	PANEL SHOP
40	AS REQ'D.	PHENOLIC NAMEPLATE 1/2"H x 1 1/2"W WHITE W/BLACK 1/4" HIGH LETTERS, SEE NAMEPLATE SCHEDULE	PANEL SHOP
41	AS REQ'D.	PHENOLIC NAMEPLATE 3/4"H x 2"W WHITE W/BLACK 3/8" HIGH LETTERS, SEE NAMEPLATE SCHEDULE	PANEL SHOP
42	AS REQ'D.	PHENOLIC NAMEPLATE 1"H x 3"W WHITE W/BLACK 3/8" HIGH LETTERS, SEE NAMEPLATE SCHEDULE	PANEL SHOP
43	1	ISOLATED GROUND BAR SYSTEM, 200mm, HOFFMAN CAT NO. X-GS2K (OR EQUAL)	PANEL SHOP
44	1	RECEPTACLE 15A GFCI DIN RAIL MOUNTED WEIDMULLER CAT. NO. 6720005422 (OR EQUAL)	PANEL SHOP
45	AS REQ'D.	SLOTTED WIRE DUCT 3"W x 4"H / WITH COVER PANDUIT	PANEL SHOP
46	AS REQ'D.	SLOTTED WIRE DUCT 4"W x 4"H / WITH COVER PANDUIT	PANEL SHOP

SUB-PANEL BILL OF MATERIAL

ITEM	QUAN	DESCRIPTION	SUPPLIER
1	1	SUB-PANEL 56"H x 44"W, HOFFMAN CAT. NO. A60P48 (OR EQUAL)	PANEL SHOP
2	2	FLEX 5000 I/O, ETHERNET ADAPTER ALLEN BRADLEY CAT. NO. 5094-AENTR	PANEL SHOP
3	9	FLEX 5000 I/O, MOUNTING BASE ALLEN BRADLEY CAT. NO. 5094-MB	PANEL SHOP
4	3	FLEX 5000 I/O, SHIELD BAR ALLEN BRADLEY CAT. NO. 5094-STB	PANEL SHOP
5	3	FLEX 5000 I/O, TERMINAL BASE FOR 5094-IF8IH ALLEN BRADLEY CAT. NO. 5094-RTB3I	PANEL SHOP
6	6	FLEX 5000 I/O, REMOVABLE TERMINAL BASE FOR 5094-IB16, 5094-OB16, 5094-IA16, 5094-OA16 ALLEN BRADLEY CAT. NO. 5094-RTB3	PANEL SHOP
7	2	FLEX 5000 I/O, ANALOG 8 INPUT ISOLATED HART MODULE ALLEN BRADLEY CAT. NO. 5094-IF8IH	PANEL SHOP
8	1	FLEX 5000 I/O, ANALOG 8 OUTPUT MODULE ALLEN BRADLEY CAT. NO. 5094-OF8	PANEL SHOP
9	3	FLEX 5000 I/O, 24VDC 16 DIGITAL INPUT MODULE ALLEN BRADLEY CAT. NO. 5094-IB16	PANEL SHOP
10	1	FLEX 5000 I/O, 24VDC 16 DIGITAL OUTPUT MODULE ALLEN BRADLEY CAT. NO. 5094-OB16	PANEL SHOP
11	1	FLEX 5000 I/O, 120VAC 16 DIGITAL INPUT MODULE ALLEN BRADLEY CAT. NO. 5094-IA16	PANEL SHOP
12	1	FLEX 5000 I/O, 120VAC 16 DIGITAL OUTPUT MODULE ALLEN BRADLEY CAT. NO. 5094-OA16	PANEL SHOP
13	1	POWER SUPPLY QUINT PS/1AC/24DC/10A, DC OK ACTIVE PHEONIX CONTACT CAT. NO. 286673	PANEL SHOP
14	1	ETHERNET SWITCH 6 RJ-45 COPPER PORTS NTRON CAT. NO. 306TX	PANEL SHOP
15	1	SOLA INDUSTRIAL UPS 120VAC, 60HZ, 500VA, 300W, 4 MINUTE BACK UP TIME SOLA CAT. NO. SDU-500	PANEL SHOP
16	1	SOLA FORM C DRY CONTACT SOLA CAT. NO. RELAYCARD-SDU	PANEL SHOP
17	64	UT 4-L/HESID 24 W/ BLOWN FUSE INDICATOR, 5 X 20 mm FUSE HOLDER FOR 5094-IB16 & 5094-OB16 PHOENIX CONTACT CAT. NO. 3214366	PANEL SHOP
18	32	UT 4-L/HESI W/ BLOWN FUSE INDICATOR, 5 X 20 mm FUSE HOLDER FOR 5094-IA16 & 5094-OA16 PHOENIX CONTACT CAT. NO. 3214325	PANEL SHOP
19	24	TRI LEVEL DISCONNECT TERMINAL BLOCK FOR 5094-IF8IH & 5094-OF8 PHOENIX CONTACT CAT. NO. 3214325	PANEL SHOP
20	12	END BRACKET FOR NS 35 MOUNTING RAIL TYPE E/UK 1 (DOUBLE/TRIPPLE/LEVEL TERM) PHOENIX CONTACT CAT. NO. 201413	PANEL SHOP
21	64	FUSE 5x20mm RATING 1/2 AMP 5mm x 20mm BUSSMAN GMA	PANEL SHOP
22	16	FUSE 5x20mm RATING 2 AMP 5mm x 20mm BUSSMAN GMA	PANEL SHOP
23	AS REQ'D.	TS 35 x 7.5 mm SLOTTED STEEL DIN RAIL (ALUMINUM NOT ACCEPTED) ALLEN BRADLEY CAT. NO. 1492-EAHJ35 (OR EQUAL)	PANEL SHOP
24	2	GROUP MARKER ALLEN BRADLEY CAT. NO. 1492-GM35 (OR EQUAL)	PANEL SHOP
25	10	END ANCHOR ALLEN BRADLEY CAT. NO. 1492-ERL35 (OR EQUAL)	PANEL SHOP
26	1	20 AMP CIRCUIT BREAKER 1 POLE ALLEN BRADLEY CAT. NO. 1489-A1C200 (OR EQUAL)	PANEL SHOP
27	1	15 AMP CIRCUIT BREAKER 1 POLE ALLEN BRADLEY CAT. NO. 1489-A1C150 (OR EQUAL)	PANEL SHOP
28	1	10 AMP CIRCUIT BREAKER 1 POLE ALLEN BRADLEY CAT. NO. 1489-A1C100 (OR EQUAL)	PANEL SHOP
29	2	5 AMP CIRCUIT BREAKER 1 POLE ALLEN BRADLEY CAT. NO. 1489-A1C050 (OR EQUAL)	PANEL SHOP
30	32	2 AMP CIRCUIT BREAKER 1 POLE ALLEN BRADLEY CAT. NO. 1492-GH020 (OR EQUAL)	PANEL SHOP
31	18	FEED THROUGH TERMINAL 600V ALLEN BRADLEY CAT. NO. 1492-J4BL (OR EQUAL)	PANEL SHOP
32	2	PARTITION PLATE ALLEN BRADLEY CAT. NO. 1492-EBJ16 (OR EQUAL)	PANEL SHOP
33	18	GROUND BLOCK TERMINAL 600V ALLEN BRADLEY CAT. NO. 1492 (OR EQUAL)	PANEL SHOP
34	AS REQ'D.	MARKING SYSTEM (FOR 600V TERMINALS ALLEN BRADLEY CAT. NO. 1492-MR6X12 (OR EQUAL)	PANEL SHOP
35	18	FEED THROUGH TERMINAL 300V ALLEN BRADLEY CAT. NO. 1492-WM4 (OR EQUAL)	PANEL SHOP
36	2	PARTITION PLATE ALLEN BRADLEY CAT. NO. 1492-PPM3 (OR EQUAL)	PANEL SHOP
37	AS REQ'D.	MARKING SYSTEM (FOR 300V TERMINALS) ALLEN BRADLEY CAT. NO. 1492-MR6X9 (OR EQUAL)	PANEL SHOP

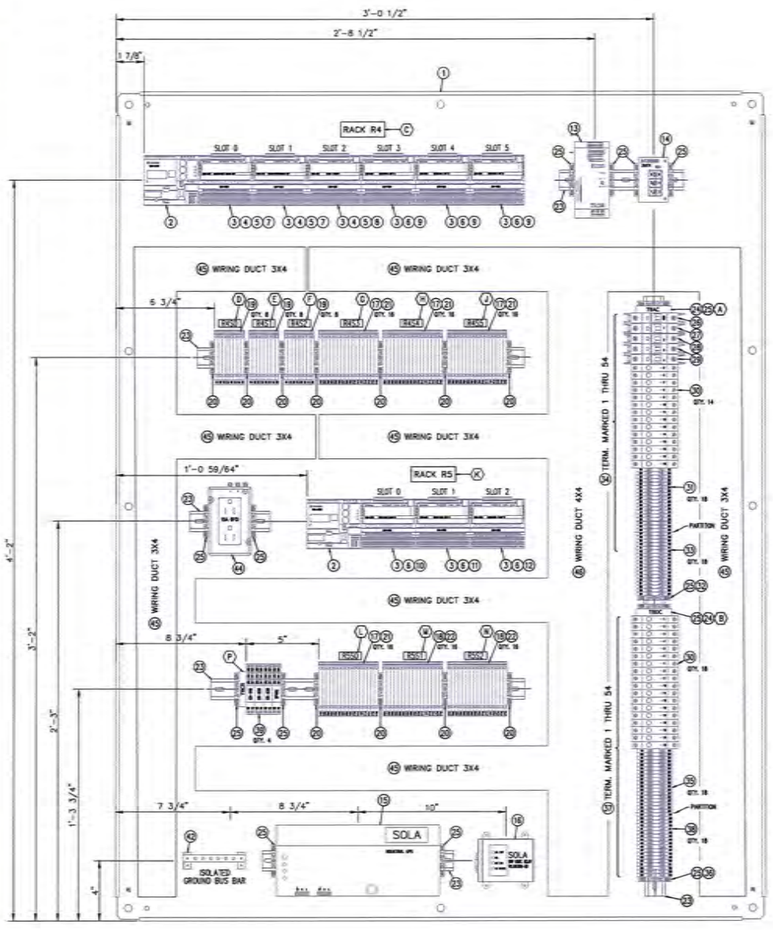

IOP-3
SUBPANEL ARRANGEMENT
SCALE: 3" = 1'-0"

NOTES:

1. ALL TERMINAL BLOCKS TO BE NUMBERED WITH PREPRINTED LABELS.
2. ALL WIRING TO HAVE IMPRINTED SHRINK TUBING ID LABELS.
3. PANEL SHOP TO INSTALL STAND-OFFS UNDER DIN RAIL TO BRING TERMINALS FLUSH WITH TOP OF WIRING DUCT.

REFERENCE DRAWINGS:

E1630 IOP-3 LAYOUT PANEL & B.O.M
E1631 IOP-3 CONTROL SUB-PANEL LAYOUT & B.O.M
E1632 IOP-3 CONTROL PANEL TERMINAL DETAILS
E1633 IOP-3 CONTROL PANEL 120VAC POWER LADDER
E1634 IOP-3 CONTROL PANEL 24VDC POWER LADDER
E1635 IOP-3 CONTROL PANEL RACK 2 SLOTS 0 & 1 WIRING
E1636 IOP-3 CONTROL PANEL RACK 2 SLOTS 2 & 3 WIRING
E1637 IOP-3 CONTROL PANEL RACK 2 SLOTS 4 & 5 WIRING
E1638 IOP-3 CONTROL PANEL RACK 3 SLOTS 0 & 1 WIRING
E1639 IOP-3 CONTROL PANEL RACK 3 SLOTS 2 & 3 WIRING
TN601 CONTROL SYSTEM ARCHITECTURE

THIS DRAWING PRODUCED ON AUTOCAD
DO NOT REVISE MANUALLY

"THIS DOCUMENT IS THE PROPERTY OF NAVAL FACILITIES ENGINEERING COMMAND, PREPARED BY TETRA TECH ENGINEERING CORPORATION PC, AND IS PROVIDED UPON THE CONDITION THAT IT WILL NOT BE REPRODUCED, COPIED, OR ISSUED TO A THIRD PARTY, AND WILL BE USED SOLELY FOR THE ORIGINAL INTENDED PURPOSE AND SOLELY FOR THE EXECUTION OR REVIEW OF THE ENGINEERING CONSTRUCTION OF THE PROJECT".

IT IS A VIOLATION OF THE NEW YORK STATE EDUCATION LAW, ARTICLE 145, FOR ANY PERSON, UNLESS UNDER THE DIRECTION OF A NEW YORK STATE LICENSED PROFESSIONAL ENGINEER, TO ALTER AN ITEM ON THIS DOCUMENT IN ANY WAY.

ISSUED FOR BID - FEBRUARY 2026

NAVFAC

TETRA TECH
www.tetratech.com
4430 CORPORATION LANE, SUITE 350
VIRGINIA BEACH, VA 23462
PHONE: (757)-451-3768 FAX: (757)-461-4148
A/E INFO

APPROVED
FOR COMMAND NAVFAC
ACTION: As per document from Nicole Cowand, NAVFAC MIDLANT PW/EV2
SATISFACTORY TO DATE 04/24/2026
DES JJK DRN JJK CHK WS
PM/DM
BRANCH MANAGER
CHIEF ENG/ARCH
FIRE PROTECTION

NAVAL FACILITIES ENGINEERING SYSTEMS COMMAND - MID - ATLANTIC
NAVAL INDUSTRIAL RESERVE ORDNANCE PLANT
NAVAL WEAPONS INDUSTRIAL RESERVE PLANT BETHPAGE, NEW YORK
PHASE III - TREATMENT PLANT
IOP-3 SUB-PANEL LAYOUT & BILL OF MATERIAL

SCALE: AS NOTED
EPROJECT NO.:
CONSTR. CONTR. NO.
NAVFAC DRAWING NO. ##
SHEET OF
E1631

FILE NAME: Y:\03-Projects\Federal\NAVFAC\112000005_W24_PHASE III DWTP_2023\3. Working Files\Drawings\dwg\E\E630 - E1632.dwg LAYOUT NAME: E1631 PLOTTED: Tuesday, April 21, 2026 - 8:00am USER: Bill.Steinbrinker

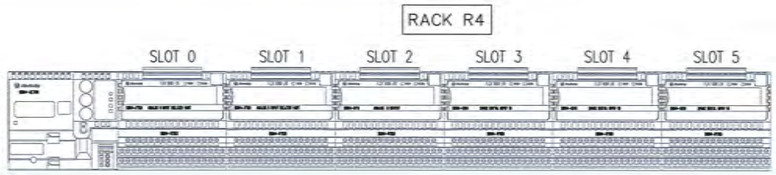

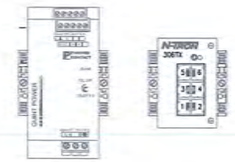

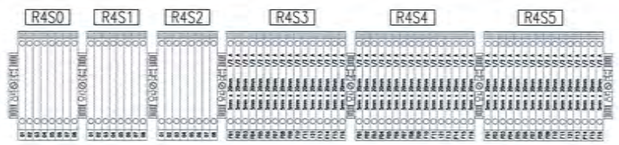

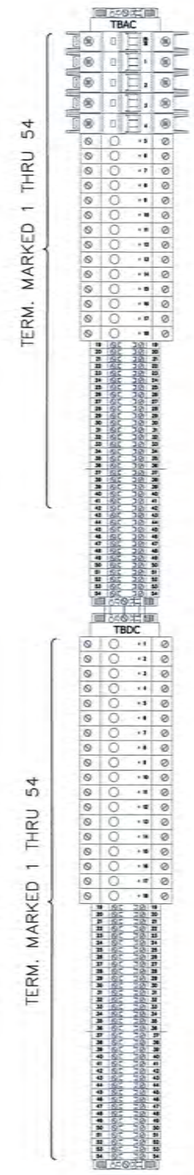

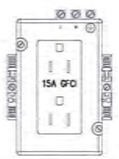

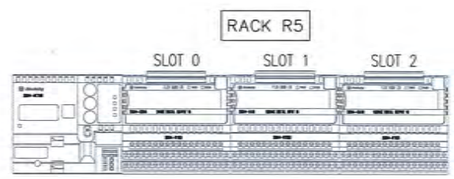

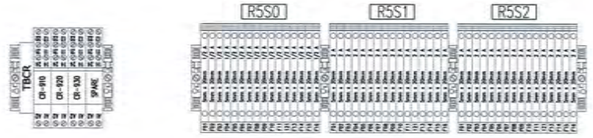

REFERENCE DRAWINGS:

EI630	IOP-3 LAYOUT PANEL & B.O.M
EI631	IOP-3 CONTROL SUB-PANEL LAYOUT & B.O.M
EI632	IOP-3 CONTROL PANEL TERMINAL DETAILS
EI633	IOP-3 CONTROL PANEL 120VAC POWER LADDER
EI634	IOP-3 CONTROL PANEL 24VDC POWER LADDER
EI635	IOP-3 CONTROL PANEL RACK 2 SLOTS 0 & 1 WIRING
EI636	IOP-3 CONTROL PANEL RACK 2 SLOTS 2 & 3 WIRING
EI637	IOP-3 CONTROL PANEL RACK 2 SLOTS 4 & 5 WIRING
EI638	IOP-3 CONTROL PANEL RACK 3 SLOTS 0 & 1 WIRING
EI639	IOP-3 CONTROL PANEL RACK 3 SLOTS 2 & 3 WIRING
TN601	CONTROL SYSTEM ARCHITECTURE

THIS DRAWING PRODUCED ON AUTOCAD
DO NOT REVISE MANUALLY

THIS DOCUMENT IS THE PROPERTY OF NAVAL FACILITIES ENGINEERING COMMAND, PREPARED BY TETRA TECH ENGINEERING CORPORATION PC, AND IS PROVIDED UPON THE CONDITION THAT IT WILL NOT BE REPRODUCED, COPIED, OR ISSUED TO A THIRD PARTY, AND WILL BE USED SOLELY FOR THE ORIGINAL INTENDED PURPOSE AND SOLELY FOR THE EXECUTION OR REVIEW OF THE ENGINEERING CONSTRUCTION OF THE PROJECT.

IT IS A VIOLATION OF THE NEW YORK STATE EDUCATION LAW, ARTICLE 145, FOR ANY PERSON, UNLESS UNDER THE DIRECTION OF A NEW YORK STATE LICENSED PROFESSIONAL ENGINEER, TO ALTER AN ITEM ON THIS DOCUMENT IN ANY WAY.

ISSUED FOR BID - FEBRUARY 2026

NAVFAC

TETRA TECH
www.tetratech.com
4433 CORPORATION LANE, SUITE 300
VIRGINIA BEACH, VA 23462
PHONE: (757) 461-3708 FAX: (757) 461-4148
A/E INFO

APPROVED
FOR COMMANDER NAVFAC

ACTIVITY
As per document from Nicole Cowand, NAVFAC MIDLANT PLL/EV3.

SATISFACTORY TO DATE 04/24/2026

DES JJK | DRW JJK | CHK WS
PM/DM
BRANCH MANAGER
CHIEF ENG/ARCH
FIRE PROTECTION

NAVAL FACILITIES ENGINEERING SYSTEMS COMMAND - MID - ATLANTIC
NAVAL INDUSTRIAL RESERVE ORDNANCE PLANT
NAVAL WEAPONS INDUSTRIAL RESERVE PLANT BETHPAGE, NEW YORK
PHASE III - TREATMENT PLANT
IOP-3 CONTROL TERMINAL DETAILS

SCALE: AS NOTED
EPROJECT NO.: -
CONSTR. CONTR. NO.
NAVFAC DRAWING NO.
SHEET OF -
EI632

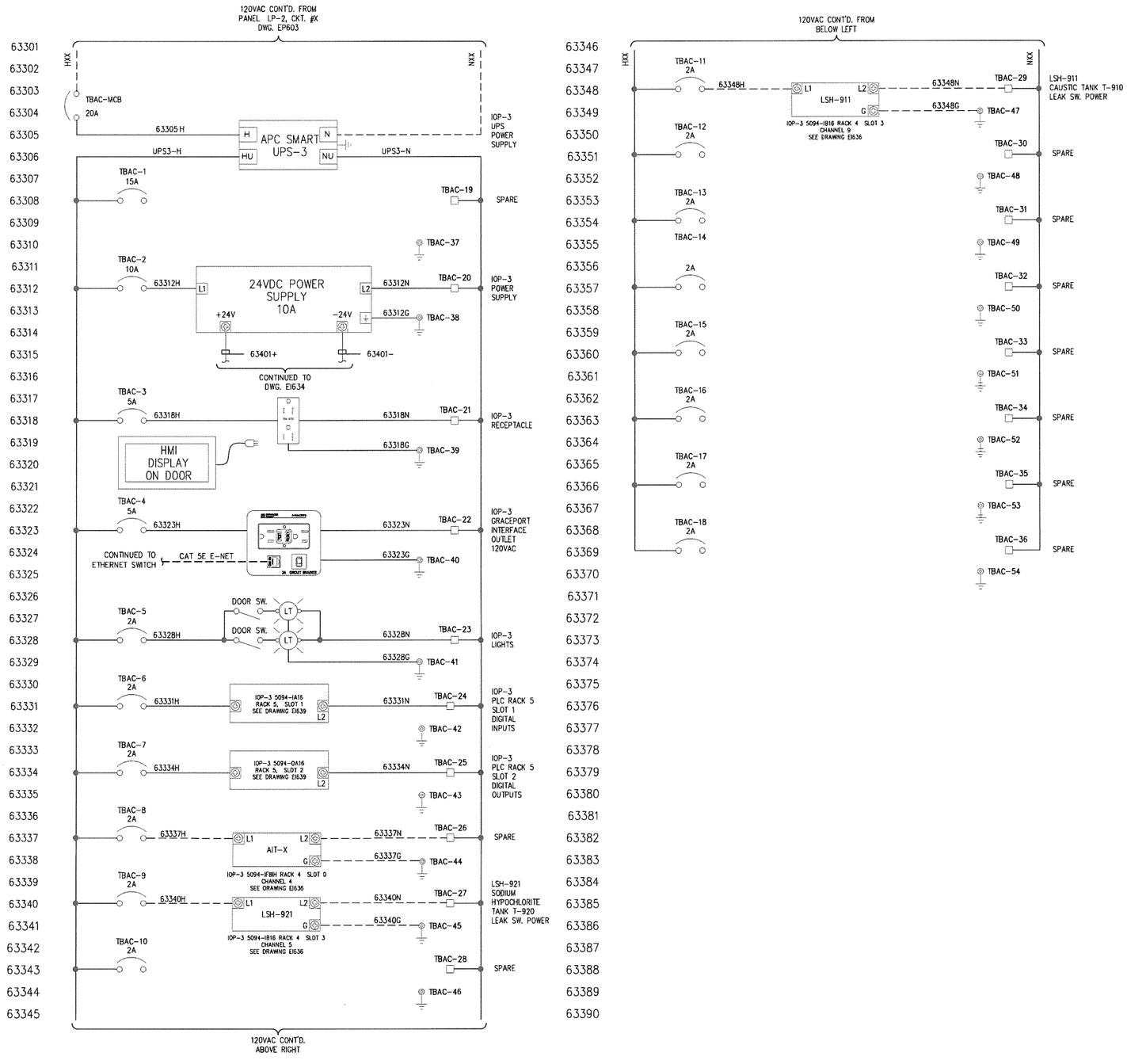

LEGEND:

———— INTERNAL PANEL WIRING (BY PANEL FABRICATOR)

– – – – – – EXTERNAL PANEL WIRING (BY ELECTRICAL CONTRACTOR)

REFERENCE DRAWINGS:

EI630	IOP-3 LAYOUT PANEL & B.O.M
EI631	IOP-3 CONTROL SUB-PANEL LAYOUT & B.O.M
EI632	IOP-3 CONTROL PANEL TERMINAL DETAILS
EI633	IOP-3 CONTROL PANEL 120VAC POWER LADDER
EI634	IOP-3 CONTROL PANEL 24VDC POWER LADDER
EI635	IOP-3 CONTROL PANEL RACK 4 SLOTS 0 & 1 WIRING
EI636	IOP-3 CONTROL PANEL RACK 4 SLOTS 2 & 3 WIRING
EI637	IOP-3 CONTROL PANEL RACK 4 SLOTS 4 & 5 WIRING
EI638	IOP-3 CONTROL PANEL RACK 5 SLOTS 0 & 1 WIRING
EI639	IOP-3 CONTROL PANEL RACK 5 SLOT 2 WIRING
TN601	CONTROL SYSTEM ARCHITECTURE

THIS DRAWING PRODUCED ON AUTOCAD DO NOT REVISE MANUALLY

"THIS DOCUMENT IS THE PROPERTY OF NAVAL FACILITIES ENGINEERING COMMAND, PREPARED BY TETRA TECH ENGINEERING CORPORATION PC, AND IS PROVIDED UPON THE CONDITION THAT IT WILL NOT BE REPRODUCED, COPIED, OR ISSUED TO A THIRD PARTY, AND WILL BE USED SOLELY FOR THE ORIGINAL INTENDED PURPOSE AND SOLELY FOR THE EXECUTION OR REVIEW OF THE ENGINEERING CONSTRUCTION OF THE PROJECT".

IT IS A VIOLATION OF THE NEW YORK STATE EDUCATION LAW, ARTICLE 145, FOR ANY PERSON, UNLESS UNDER THE DIRECTION OF A NEW YORK STATE LICENSED PROFESSIONAL ENGINEER, TO ALTER AN ITEM ON THIS DOCUMENT IN ANY WAY.

ISSUED FOR BID - FEBRUARY 2026

NAVFAC

STATE OF NEW YORK LICENSED PROFESSIONAL ENGINEER 080334 4/24/26

TETRA TECH
www.tetratech.com
4433 CORPORATION LANE, SUITE 300
VIRGINIA BEACH, VA 23462
PHONE: (757) 461-3766 FAX: (757) 461-4148
A/E INFO

APPROVED
FOR COMMANDER NAVFAC

ACTIVITY: As per document from Nicole Cowand, NAVFAC MIDLANT PLL/EV3.

SATISFACTORY TO	DATE 04/24/2026	
DES JJK	DRW JJK	CHK WS
PM/DM		
BRANCH MANAGER		
CHIEF ENG/ARCH		
FIRE PROTECTION		

NAVAL FACILITIES ENGINEERING SYSTEMS COMMAND - MID - ATLANTIC
NAVAL INDUSTRIAL RESERVE ORDNANCE PLANT
RWO3
NAVAL WEAPONS INDUSTRIAL RESERVE PLANT BETHPAGE, NEW YORK
PHASE III - TREATMENT PLANT
IOP-3 CONTROL PANEL 120VAC POWER LADDER

SCALE: AS NOTED
EPROJECT NO.: -
CONSTR. CONTR. NO.
NAVFAC DRAWING NO. ##
SHEET - OF -
EI633

UNCLASSIFIED

FILE NAME: Y:\DJ-Projects\Federal\NAVFAC\120080005_WE24_PHASE III GWTP_2023\3. Working Files\Drawings\AeC\EI633 - EI639.dwg LAYOUT NAME: EI633 PLOTTED: Tuesday, April 21, 2026 - 8:02am USER: Bill.Stonebraker

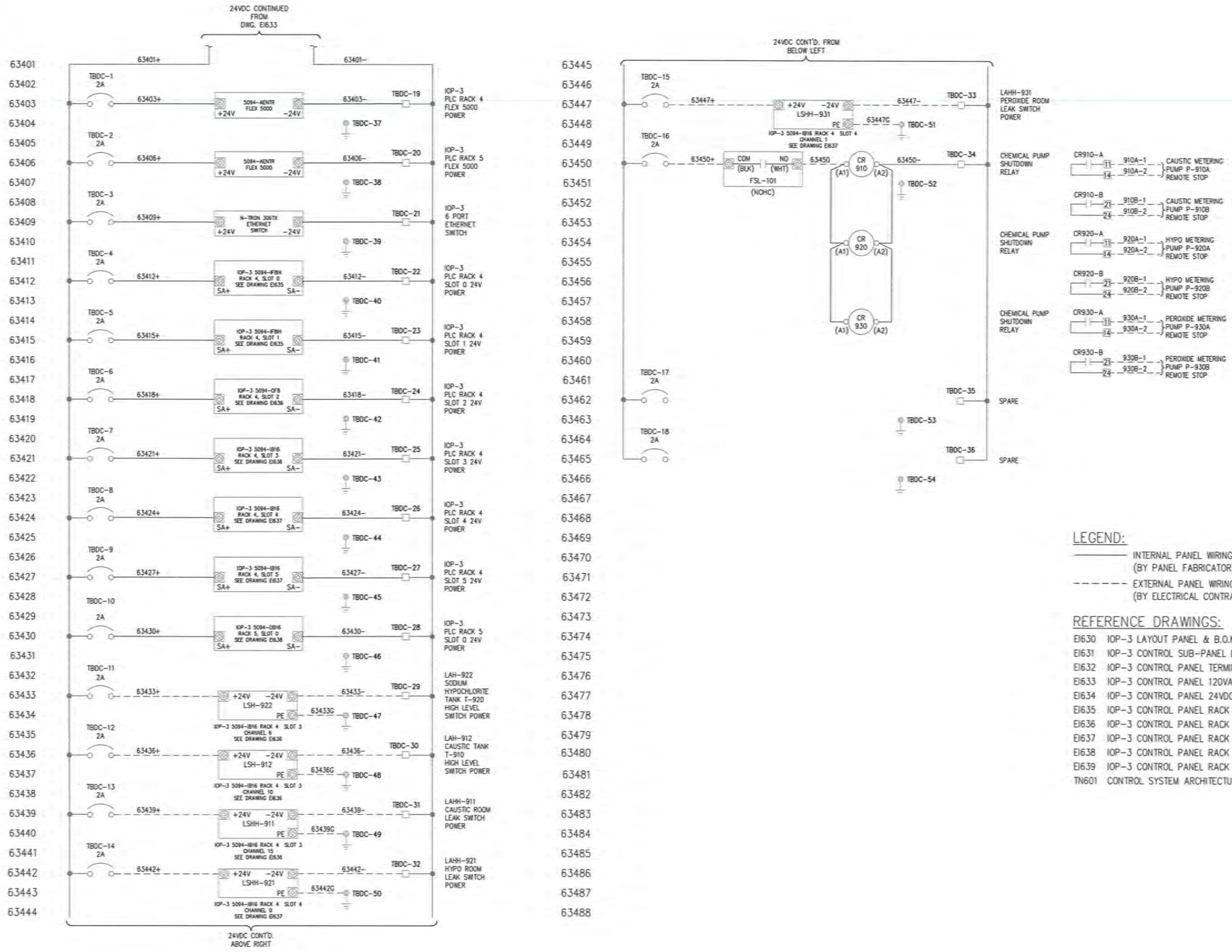

LEGEND:

——— INTERNAL PANEL WIRING (BY PANEL FABRICATOR)

- - - - - - EXTERNAL PANEL WIRING (BY ELECTRICAL CONTRACTOR)

REFERENCE DRAWINGS:

EI630	IOP-3 LAYOUT PANEL & B.O.M
EI631	IOP-3 CONTROL SUB-PANEL LAYOUT & B.O.M
EI632	IOP-3 CONTROL PANEL TERMINAL DETAILS
EI633	IOP-3 CONTROL PANEL 120VAC POWER LADDER
EI634	IOP-3 CONTROL PANEL 24VDC POWER LADDER
EI635	IOP-3 CONTROL PANEL RACK 4 SLOTS 0 & 1 WIRING
EI636	IOP-3 CONTROL PANEL RACK 4 SLOTS 2 & 3 WIRING
EI637	IOP-3 CONTROL PANEL RACK 4 SLOTS 4 & 5 WIRING
EI638	IOP-3 CONTROL PANEL RACK 5 SLOTS 0 & 1 WIRING
EI639	IOP-3 CONTROL PANEL RACK 5 SLOT 2 WIRING
TN601	CONTROL SYSTEM ARCHITECTURE

THIS DRAWING PRODUCED ON AUTOCAD DO NOT REVISE MANUALLY

"THIS DOCUMENT IS THE PROPERTY OF NAVAL FACILITIES ENGINEERING COMMAND, PREPARED BY TETRA TECH ENGINEERING CORPORATION PC, AND IS PROVIDED UPON THE CONDITION THAT IT WILL NOT BE REPRODUCED, COPIED, OR ISSUED TO A THIRD PARTY, AND WILL BE USED SOLELY FOR THE ORIGINAL INTENDED PURPOSE AND SOLELY FOR THE EXECUTION OR REVIEW OF THE ENGINEERING CONSTRUCTION OF THE PROJECT".

IT IS A VIOLATION OF THE NEW YORK STATE EDUCATION LAW, ARTICLE 145, FOR ANY PERSON, UNLESS UNDER THE DIRECTION OF A NEW YORK STATE LICENSED PROFESSIONAL ENGINEER, TO ALTER AN ITEM ON THIS DOCUMENT IN ANY WAY.

ISSUED FOR BID - FEBRUARY 2026

NAVFAC

TETRA TECH
www.tetratech.com
4433 CORPORATION LANE, SUITE 300
VIRGINIA BEACH, VA 23462
PHONE: (757) 497-3788 FAX: (757) 497-4148
A/E NO

APPROVED
FOR COMMANDER NAVFAC
ACTION: As per document from Nicole Cowand, NAVFAC MIDLANT PEL/EV3.
SATISFACTORY TO: DATE 04/24/2026
DES JJK | DRW JJK | CHK WS
PM/DM
BRANCH MANAGER
CHIEF ENG/ARCH
FIRE PROTECTION

NAVAL FACILITIES ENGINEERING SYSTEMS COMMAND - MID - ATLANTIC
NAVAL INDUSTRIAL RESERVE ORDNANCE PLANT
FWID
NAVAL WEAPONS INDUSTRIAL RESERVE PLANT BETHPAGE, NEW YORK
PHASE III - TREATMENT PLANT
IOP-3 CONTROL PANEL 24VDC POWER LADDER

SCALE: AS NOTED
EPROJECT NO.:
CONSTR. CONTR. NO.
NAVFAC DRAWING NO. ##
SHEET OF
EI634

FILE NAME: Y:\03-Projects\Federal\NAVFAC\112008005_MC24_PHASE III GWTP_2023\3. Working Files\Drawings\MC\EI633 - EI639.dwg LAYOUT NAME: EI634 PLOTTED: Tuesday, April 21, 2026 - 8:02am USER: Bill.Sloneberker

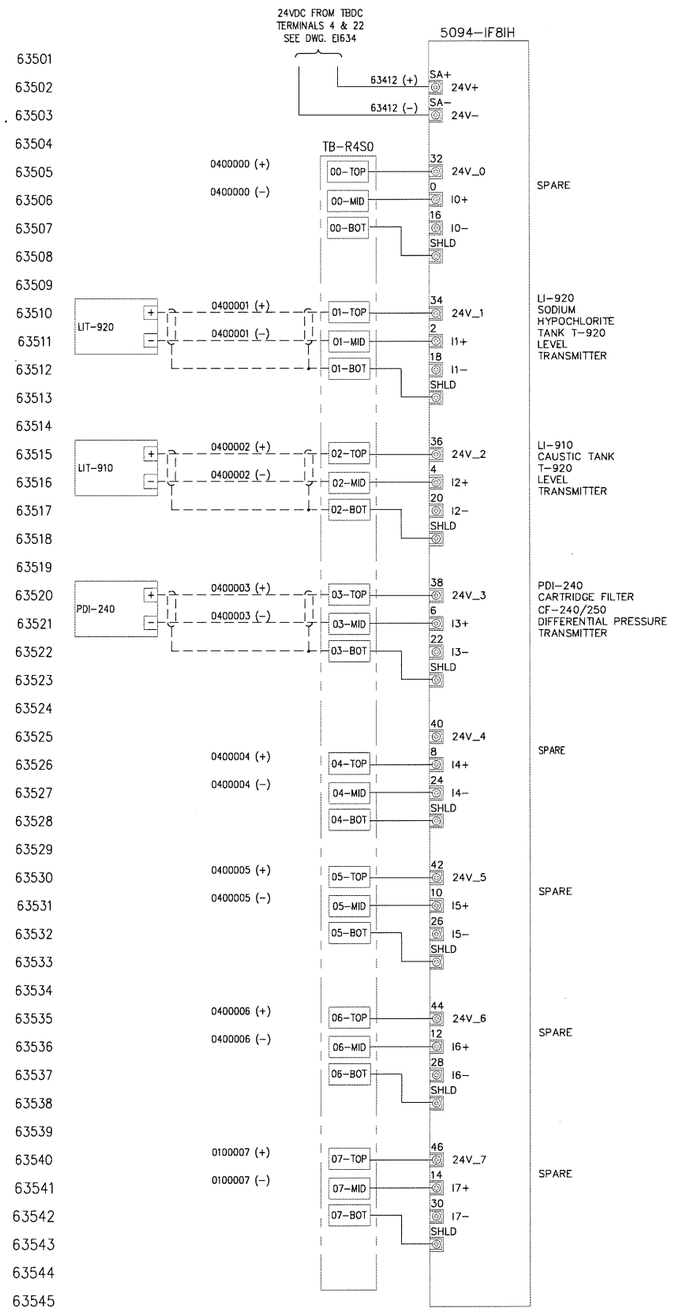

A-B PT# 5094-IF8IH
AI, 4-20mA, HART, 8CHN
RACK 4, SLOT 0

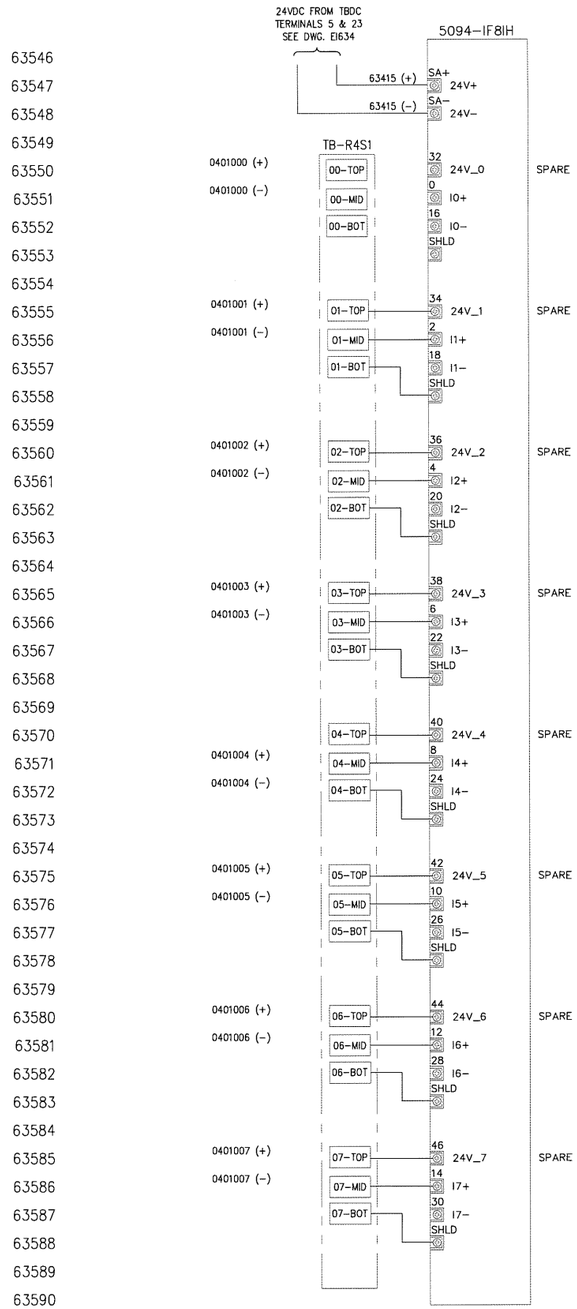

A-B PT# 5094-IF8IH
AI, 4-20mA, HART, 8CHN
RACK 4, SLOT 1

LEGEND:

———— INTERNAL PANEL WIRING (BY PANEL FABRICATOR)

- - - - - - EXTERNAL PANEL WIRING (BY ELECTRICAL CONTRACTOR)

REFERENCE DRAWINGS:

EI630	IOP-3 LAYOUT PANEL & B.O.M
EI631	IOP-3 CONTROL SUB-PANEL LAYOUT & B.O.M
EI632	IOP-3 CONTROL PANEL TERMINAL DETAILS
EI633	IOP-3 CONTROL PANEL 120VAC POWER LADDER
EI634	IOP-3 CONTROL PANEL 24VDC POWER LADDER
EI635	IOP-3 CONTROL PANEL RACK 4 SLOTS 0 & 1 WIRING
EI636	IOP-3 CONTROL PANEL RACK 4 SLOTS 2 & 3 WIRING
EI637	IOP-3 CONTROL PANEL RACK 4 SLOTS 4 & 5 WIRING
EI638	IOP-3 CONTROL PANEL RACK 5 SLOTS 0 & 1 WIRING
EI639	IOP-3 CONTROL PANEL RACK 5 SLOT 2 WIRING
TN601	CONTROL SYSTEM ARCHITECTURE

ISSUED FOR BID - FEBRUARY 2026

THIS DRAWING PRODUCED ON AUTOCAD
DO NOT REVISE MANUALLY

"THIS DOCUMENT IS THE PROPERTY OF NAVAL FACILITIES ENGINEERING COMMAND, PREPARED BY TETRA TECH ENGINEERING CORPORATION PC, AND IS PROVIDED UPON THE CONDITION THAT IT WILL NOT BE REPRODUCED, COPIED, OR ISSUED TO A THIRD PARTY, AND WILL BE USED SOLELY FOR THE ORIGINAL INTENDED PURPOSE AND SOLELY FOR THE EXECUTION OR REVIEW OF THE ENGINEERING CONSTRUCTION OF THE PROJECT".

IT IS A VIOLATION OF THE NEW YORK STATE EDUCATION LAW, ARTICLE 145, FOR ANY PERSON, UNLESS UNDER THE DIRECTION OF A NEW YORK STATE LICENSED PROFESSIONAL ENGINEER, TO ALTER AN ITEM ON THIS DOCUMENT IN ANY WAY.

NAVFAC

STATE OF NEW YORK
LICENSED PROFESSIONAL ENGINEER
080336
4/24/26

TETRA TECH
www.tetratech.com
4433 CORPORATION LANE, SUITE 300
VIRGINIA BEACH, VA 23462
PHONE: (757) 461-3766 FAX: (757) 461-4148
A/E INFO

APPROVED
FOR COMMANDER NAVFAC

ACTIVITY
As per document from Nicole Cowand, NAVFAC MIDLANT PL/EV3.

SATISFACTORY TO DATE 04/24/2026

DES	DRW	CHK
JJK	JJK	WS

PM/DM ..
BRANCH MANAGER
CHIEF ENG/ARCH ..
FIRE PROTECTION

NAVAL FACILITIES ENGINEERING SYSTEMS COMMAND - MID - ATLANTIC
NAVAL INDUSTRIAL RESERVE ORDNANCE PLANT
NAVAL WEAPONS INDUSTRIAL RESERVE PLANT BETHPAGE, NEW YORK
PHASE III - TREATMENT PLANT
IOP-3 CONTROL PANEL RACK 4 SLOTS 0 & 1

RW09

SCALE: AS NOTED
EPROJECT NO.: .
CONSTR. CONTR. NO.
NAVFAC DRAWING NO. ##
SHEET OF .
EI635

FILE NAME: Y:\DJ-Projects\Federal\NAVFAC\120080605_WE24_PHASE III GWTP_2023\3. Working Files\Drawings\AE\EI633 - EI638.dwg LAYOUT NAME: EI635 PLOTTED: Tuesday, April 21, 2026 - 8:03am USER: Bill.Stonebraker

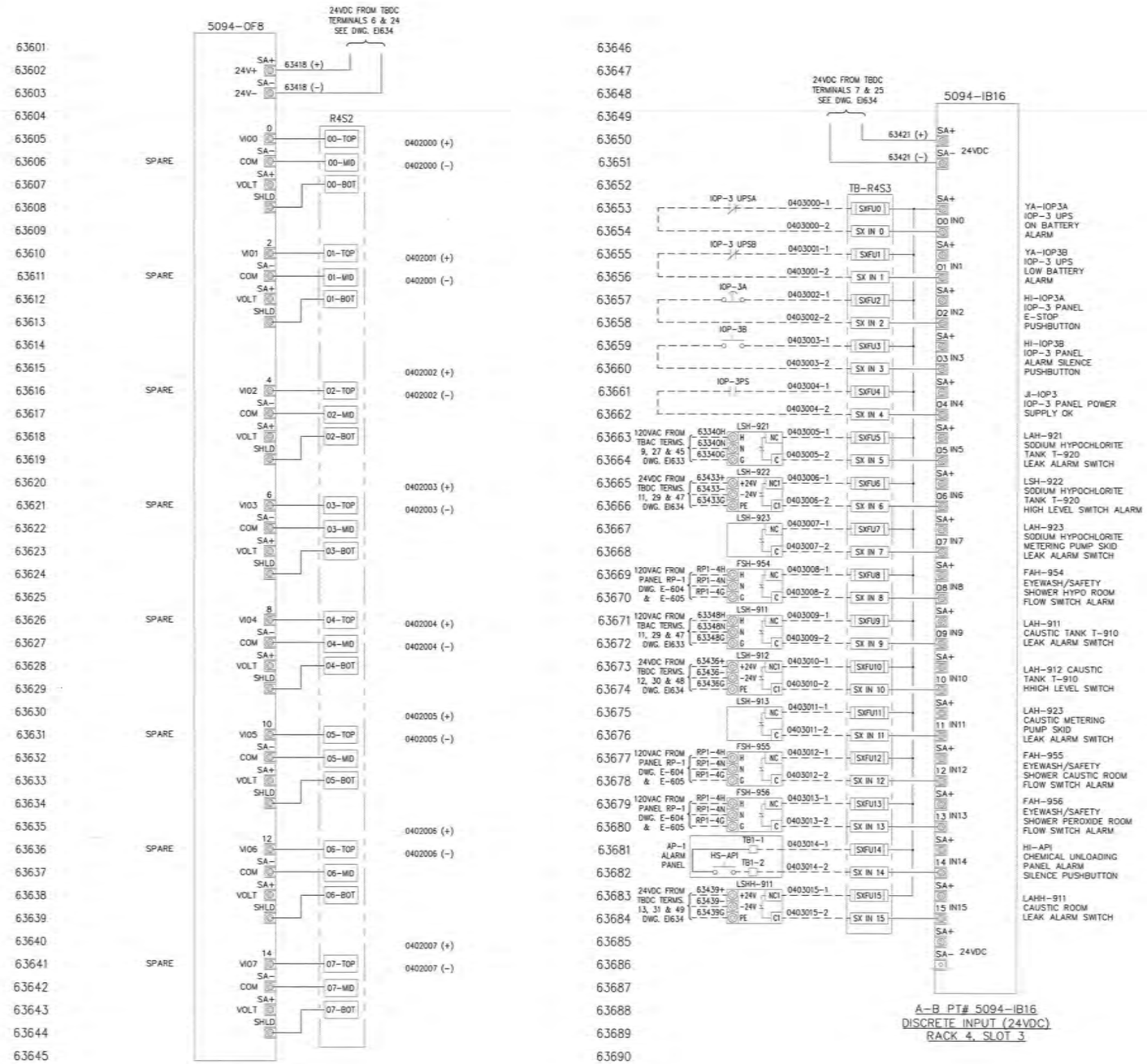

A-B PT# 5094-OF8
ANALOG OUTPUT, 8CHN
RACK 4, SLOT 2

A-B PT# 5094-IB16
DISCRETE INPUT (24VDC)
RACK 4, SLOT 3

LEGEND:

——— INTERNAL PANEL WIRING (BY PANEL FABRICATOR)

- - - - - - EXTERNAL PANEL WIRING (BY ELECTRICAL CONTRACTOR)

REFERENCE DRAWINGS:

EI630 IOP-3 LAYOUT PANEL & B.O.M
EI631 IOP-3 CONTROL SUB-PANEL LAYOUT & B.O.M
EI632 IOP-3 CONTROL PANEL TERMINAL DETAILS
EI633 IOP-3 CONTROL PANEL 120VAC POWER LADDER
EI634 IOP-3 CONTROL PANEL 24VDC POWER LADDER
EI635 IOP-3 CONTROL PANEL RACK 4 SLOTS 0 & 1 WIRING
EI636 IOP-3 CONTROL PANEL RACK 4 SLOTS 2 & 3 WIRING
EI637 IOP-3 CONTROL PANEL RACK 4 SLOTS 4 & 5 WIRING
EI638 IOP-3 CONTROL PANEL RACK 5 SLOTS 0 & 1 WIRING
EI639 IOP-3 CONTROL PANEL RACK 5 SLOT 2 WIRING
EI690 AP-1 CHEMICAL UNLOADING ALARM PANEL LAYOUT
TN601 CONTROL SYSTEM ARCHITECTURE

ISSUED FOR BID - FEBRUARY 2026

THIS DRAWING PRODUCED ON AUTOCAD DO NOT REVISE MANUALLY

"THIS DOCUMENT IS THE PROPERTY OF NAVAL FACILITIES ENGINEERING COMMAND, PREPARED BY TETRA TECH ENGINEERING CORPORATION PC, AND IS PROVIDED UPON THE CONDITION THAT IT WILL NOT BE REPRODUCED, COPIED, OR ISSUED TO A THIRD PARTY, AND WILL BE USED SOLELY FOR THE ORIGINAL INTENDED PURPOSE AND SOLELY FOR THE EXECUTION OR REVIEW OF THE ENGINEERING CONSTRUCTION OF THE PROJECT".

IT IS A VIOLATION OF THE NEW YORK STATE EDUCATION LAW, ARTICLE 145, FOR ANY PERSON, UNLESS UNDER THE DIRECTION OF A NEW YORK STATE LICENSED PROFESSIONAL ENGINEER, TO ALTER AN ITEM ON THIS DOCUMENT IN ANY WAY.

NAVFAC

STATE OF NEW YORK
LICENSED PROFESSIONAL ENGINEER
4/24/26

TETRA TECH
www.tetratech.com
4433 CORPORATION LANE, SUITE 300
VIRGINIA BEACH, VA 23462
PHONE: (757) 451-3156 FAX: (757) 451-4148
A/E INFO

APPROVED
FOR COMMANDER NAVFAC
ACTION
As per document from Nicole Cowand, NAVFAC MIDLANT PLL/EV3.
SATISFACTORY TO DATE 04/24/2026
DES JJK DRN JJK CHK WS
PM/CM
BRANCH MANAGER
CHIEF ENG/ARCH
FIRE PROTECTION

NAVAL FACILITIES ENGINEERING SYSTEMS COMMAND - MID - ATLANTIC
NAVAL INDUSTRIAL RESERVE ORDNANCE PLANT
NAVAL WEAPONS INDUSTRIAL RESERVE PLANT BETHPAGE, NEW YORK
PHASE III - TREATMENT PLANT
IOP-3 CONTROL PANEL RACK 4 SLOTS 2 & 3

SCALE: AS NOTED
EPROJECT NO.:
CONSTR. CONTR. NO.
NAVFAC DRAWING NO.
SHEET OF
EI636

FILE NAME: Y:\03-Projects\Federal\NAVFAC\112508005_WC24_PHASE III OWTP_2023\3. Working Files\Drawings\AutoCAD\EI633 - EI639.dwg LAYOUT NAME: EI636 PLOTTED: Tuesday, April 21, 2026 - 8:03am USER: Bill.Stanebroker

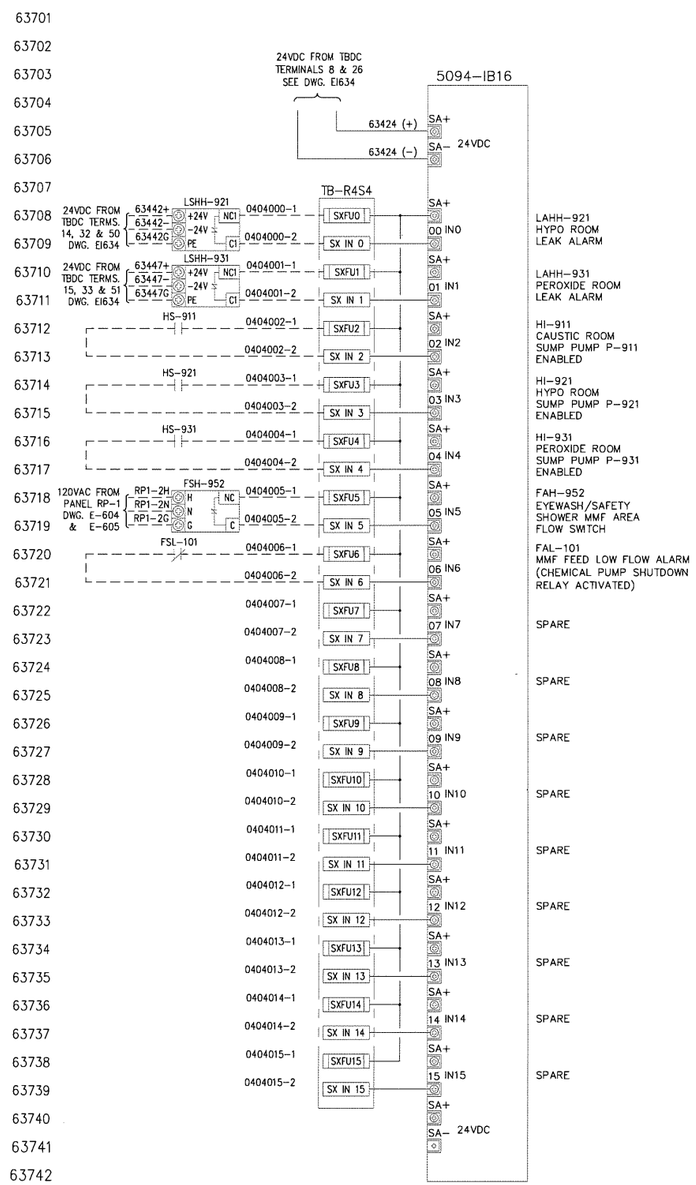

A-B PT# 5094-IB16
DISCRETE INPUT (24VDC)
RACK 4, SLOT 4

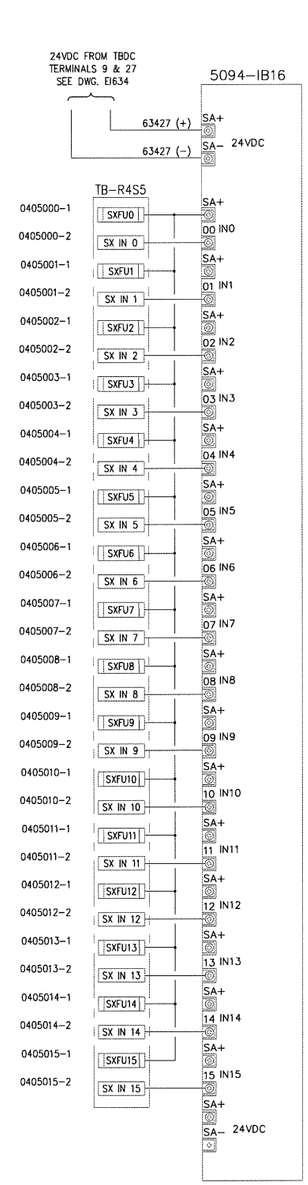

A-B PT# 5094-IB16
DISCRETE INPUT (24VDC)
RACK 4, SLOT 5

LEGEND:

——————— INTERNAL PANEL WIRING (BY PANEL FABRICATOR)

- - - - - - EXTERNAL PANEL WIRING (BY ELECTRICAL CONTRACTOR)

REFERENCE DRAWINGS:

EI630	IOP-3 LAYOUT PANEL & B.O.M
EI631	IOP-3 CONTROL SUB-PANEL LAYOUT & B.O.M
EI632	IOP-3 CONTROL PANEL TERMINAL DETAILS
EI633	IOP-3 CONTROL PANEL 120VAC POWER LADDER
EI634	IOP-3 CONTROL PANEL 24VDC POWER LADDER
EI635	IOP-3 CONTROL PANEL RACK 4 SLOTS 0 & 1 WIRING
EI636	IOP-3 CONTROL PANEL RACK 4 SLOTS 2 & 3 WIRING
EI637	IOP-3 CONTROL PANEL RACK 4 SLOTS 4 & 5 WIRING
EI638	IOP-3 CONTROL PANEL RACK 5 SLOTS 0 & 1 WIRING
EI639	IOP-3 CONTROL PANEL RACK 5 SLOT 2 WIRING
TN601	CONTROL SYSTEM ARCHITECTURE

THIS DRAWING PRODUCED ON AUTOCAD
DO NOT REVISE MANUALLY

"THIS DOCUMENT IS THE PROPERTY OF NAVAL FACILITIES ENGINEERING COMMAND, PREPARED BY TETRA TECH ENGINEERING CORPORATION PC, AND IS PROVIDED UPON THE CONDITION THAT IT WILL NOT BE REPRODUCED, COPIED, OR ISSUED TO A THIRD PARTY, AND WILL BE USED SOLELY FOR THE ORIGINAL INTENDED PURPOSE AND SOLELY FOR THE EXECUTION OR REVIEW OF THE ENGINEERING CONSTRUCTION OF THE PROJECT".

IT IS A VIOLATION OF THE NEW YORK STATE EDUCATION LAW, ARTICLE 145, FOR ANY PERSON, UNLESS UNDER THE DIRECTION OF A NEW YORK STATE LICENSED PROFESSIONAL ENGINEER, TO ALTER AN ITEM ON THIS DOCUMENT IN ANY WAY.

ISSUED FOR BID - FEBRUARY 2026

NAVFAC

STATE OF NEW YORK
DANIEL BRANDON
080336
LICENSED PROFESSIONAL ENGINEER
04/21/26

TETRA TECH
www.tetratech.com
4433 CORPORATION LANE, SUITE 300
VIRGINIA BEACH, VA 23462
PHONE: (757) 461-3768 FAX: (757) 461-4148
A/E INFO

APPROVED
FOR COMMANDER NAVFAC

ACTIVITY
As per document from Nicole Cowand, NAVFAC MIDLANT PL1/EV3.

SATISFACTORY TO DATE 04/24/2026

DES	DRW	CHK
JJK	JJK	WS

PM/DM
BRANCH MANAGER
CHIEF ENG/ARCH
FIRE PROTECTION

NAVAL FACILITIES ENGINEERING SYSTEMS COMMAND - MID - ATLANTIC
NAVAL INDUSTRIAL RESERVE ORDNANCE PLANT
RW09
NAVAL WEAPONS INDUSTRIAL RESERVE PLANT BETHPAGE, NEW YORK
PHASE III - TREATMENT PLANT

IOP-3 CONTROL PANEL RACK 4 SLOTS 4 & 5

SCALE: AS NOTED
EPROJECT NO.:
CONSTR. CONTR. NO.
NAVFAC DRAWING NO. ##
SHEET OF
EI637

FILE NAME: Y:\03-Projects\Federal\NAVFAC\120980105_W24_PHASE III GWTP_2023\3. Working Files\Drawings\A&C\EI633 - EI638.dwg LAYOUT NAME: EI637 PLOTTED: Tuesday, April 21, 2026 - 8:03am USER: Bill.Stonebraker

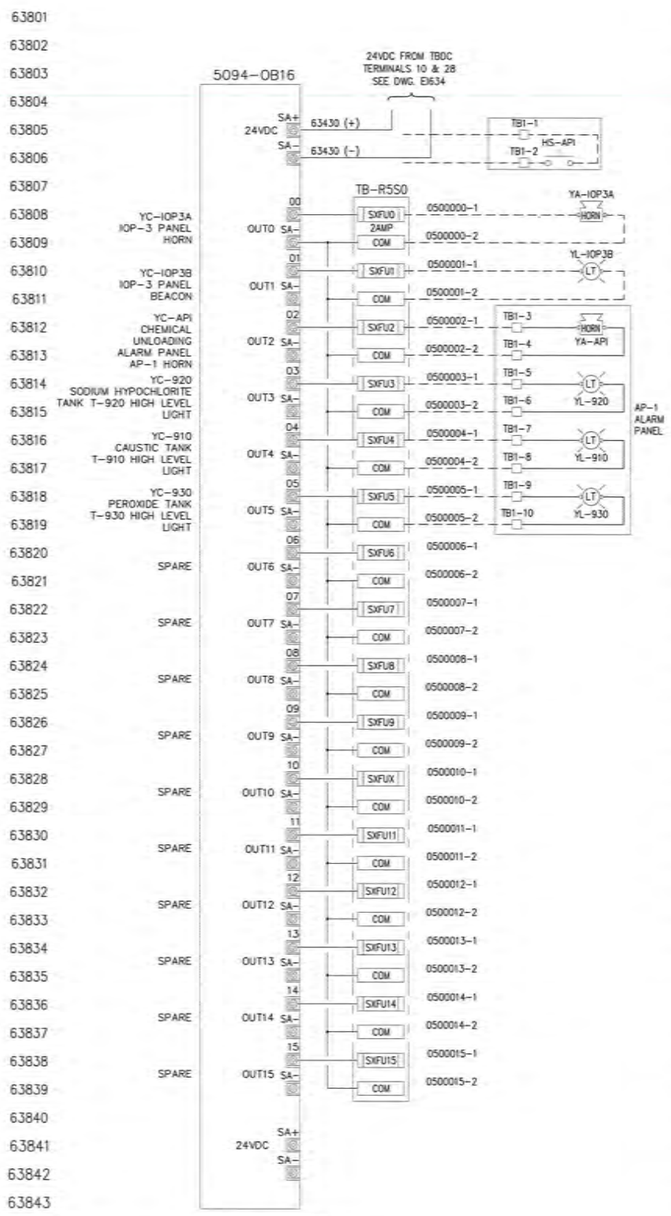

A-B PT# 5094-OB16
DISCRETE OUTPUT (24VDC)
RACK 5, SLOT 0

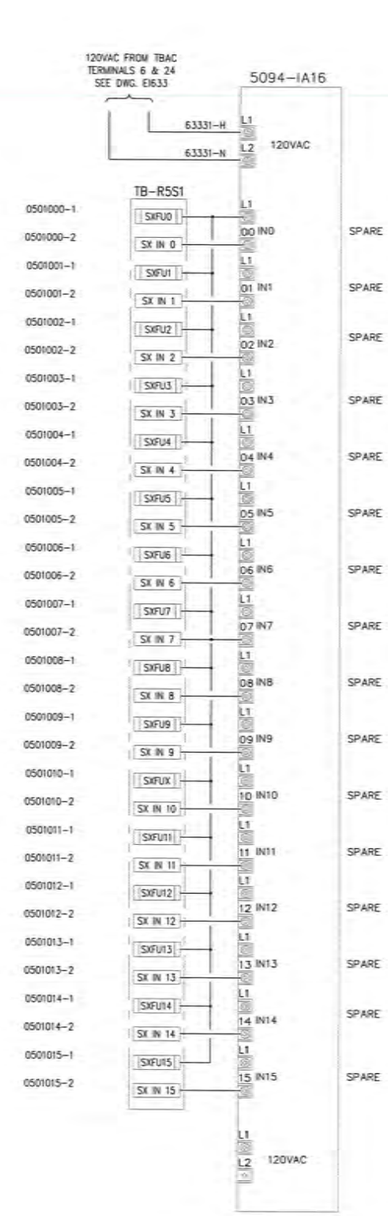

A-B PT# 5094-IA16
DISCRETE INPUT (120VAC)
RACK 5, SLOT 1

LEGEND:

——— INTERNAL PANEL WIRING (BY PANEL FABRICATOR)

- - - - - - EXTERNAL PANEL WIRING (BY ELECTRICAL CONTRACTOR)

REFERENCE DRAWINGS:

EI630	IOP-3 LAYOUT PANEL & B.O.M
EI631	IOP-3 CONTROL SUB-PANEL LAYOUT & B.O.M
EI632	IOP-3 CONTROL PANEL TERMINAL DETAILS
EI633	IOP-3 CONTROL PANEL 120VAC POWER LADDER
EI634	IOP-3 CONTROL PANEL 24VDC POWER LADDER
EI635	IOP-3 CONTROL PANEL RACK 4 SLOTS 0 & 1 WIRING
EI636	IOP-3 CONTROL PANEL RACK 4 SLOTS 2 & 3 WIRING
EI637	IOP-3 CONTROL PANEL RACK 4 SLOTS 4 & 5 WIRING
EI638	IOP-3 CONTROL PANEL RACK 5 SLOTS 0 & 1 WIRING
EI639	IOP-3 CONTROL PANEL RACK 5 SLOT 2 WIRING
EI690	AP-1 CHEMICAL UNLOADING ALARM PANEL LAYOUT
TN601	CONTROL SYSTEM ARCHITECTURE

THIS DRAWING PRODUCED ON AUTOCAD
DO NOT REVISE MANUALLY

"THIS DOCUMENT IS THE PROPERTY OF NAVAL FACILITIES ENGINEERING COMMAND, PREPARED BY TETRA TECH ENGINEERING CORPORATION PC, AND IS PROVIDED UPON THE CONDITION THAT IT WILL NOT BE REPRODUCED, COPIED, OR ISSUED TO A THIRD PARTY, AND WILL BE USED SOLELY FOR THE ORIGINAL INTENDED PURPOSE AND SOLELY FOR THE EXECUTION OR REVIEW OF THE ENGINEERING CONSTRUCTION OF THE PROJECT".

IT IS A VIOLATION OF THE NEW YORK STATE EDUCATION LAW, ARTICLE 145, FOR ANY PERSON, UNLESS UNDER THE DIRECTION OF A NEW YORK STATE LICENSED PROFESSIONAL ENGINEER, TO ALTER AN ITEM ON THIS DOCUMENT IN ANY WAY.

ISSUED FOR BID - FEBRUARY 2026

NAVFAC

TETRA TECH
www.tetratech.com
4430 CORPORATION LANE, SUITE 300
VIRGINIA BEACH, VA 23462
PHONE: (757) 461-2068 FAX: (757) 461-4148
A/E INFO

APPROVED
FOR COMMANDER NAVFAC

ACTION
As per document from Nicole Cowanc, NAVFAC MIDLANT PLL/EV3.

SATISFACTORY TO DATE 04/24/2026

DES JJK DRW JJK CHK WS
PM/DM:
BRANCH MANAGER
CHIEF ENG/ARCH
FIRE PROTECTION

NAVAL FACILITIES ENGINEERING SYSTEMS COMMAND - MID - ATLANTIC
NAVAL INDUSTRIAL RESERVE ORDNANCE PLANT
NAVAL WEAPONS INDUSTRIAL RESERVE PLANT BETHPAGE, NEW YORK
PHASE III - TREATMENT PLANT
IOP-3 CONTROL PANEL RACK 5 SLOTS 0 & 1

SCALE: AS NOTED
EPROJECT NO.: -
CONSTR. CONTR. NO.
NAVFAC DRAWING NO. ##
SHEET OF -
EI638

UNCLASSIFIED

FILE NAME: Y:\03-Projects\Federal\NAVFAC\112026005_WE24_PHASE III OMIP_2023\3. Working Files\Drawings\ACS\DI633 - EI639.dwg LAYOUT NAME: EI638 PLOTTED: Tuesday, April 21, 2026 - 8:03am USER: Bill.Stonebraker

63901
63902
63903
63904
63905
63906
63907
63908
63909
63910
63911
63912
63913
63914
63915
63916
63917
63918
63919
63920
63921
63922
63923
63924
63925
63926
63927
63928
63929
63930
63931
63932
63933
63934
63935
63936
63937
63938
63939
63940
63941
63942
63943
63944
63945

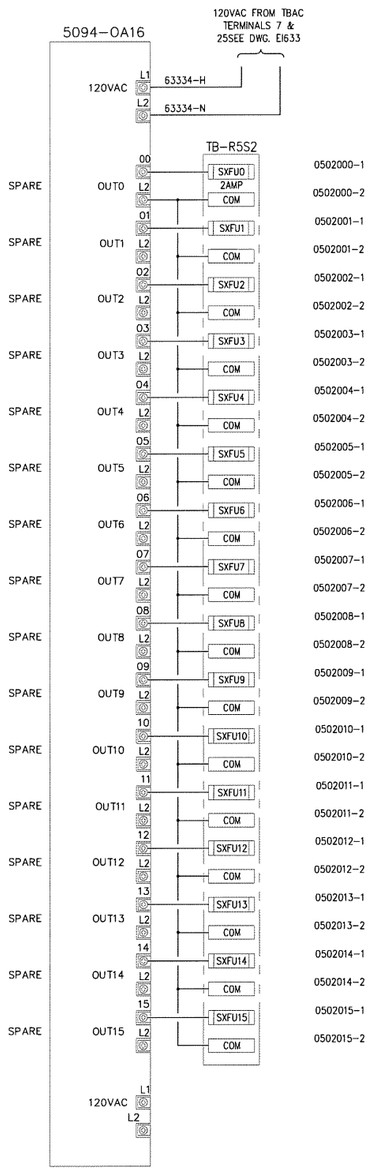

A-B PT# 5094-OA16
DISCRETE OUTPUT (120VAC)
RACK 5, SLOT 2

63946
63947
63948
63949
63950
63951
63952
63953
63954
63955
63956
63957
63958
63959
63960
63961
63962
63963
63964
63965
63966
63967
63968
63969
63970
63971
63972
63973
63974
63975
63976
63977
63978
63979
63980
63981
63982
63983
63984
63985
63986
63987
63988
63989
63990

LEGEND:

———— INTERNAL PANEL WIRING (BY PANEL FABRICATOR)

– – – – – – EXTERNAL PANEL WIRING (BY ELECTRICAL CONTRACTOR)

REFERENCE DRAWINGS:

EI630	IOP-3 LAYOUT PANEL & B.O.M
EI631	IOP-3 CONTROL SUB-PANEL LAYOUT & B.O.M
EI632	IOP-3 CONTROL PANEL TERMINAL DETAILS
EI633	IOP-3 CONTROL PANEL 120VAC POWER LADDER
EI634	IOP-3 CONTROL PANEL 24VDC POWER LADDER
EI635	IOP-3 CONTROL PANEL RACK 4 SLOTS 0 & 1 WIRING
EI636	IOP-3 CONTROL PANEL RACK 4 SLOTS 2 & 3 WIRING
EI637	IOP-3 CONTROL PANEL RACK 4 SLOTS 4 & 5 WIRING
EI638	IOP-3 CONTROL PANEL RACK 5 SLOTS 0 & 1 WIRING
EI639	IOP-3 CONTROL PANEL RACK 5 SLOT 2 WIRING
TN601	CONTROL SYSTEM ARCHITECTURE

THIS DRAWING PRODUCED ON AUTOCAD
DO NOT REVISE MANUALLY

"THIS DOCUMENT IS THE PROPERTY OF NAVAL FACILITIES ENGINEERING COMMAND, PREPARED BY TETRA TECH ENGINEERING CORPORATION PC, AND IS PROVIDED UPON THE CONDITION THAT IT WILL NOT BE REPRODUCED, COPIED, OR ISSUED TO A THIRD PARTY, AND WILL BE USED SOLELY FOR THE ORIGINAL INTENDED PURPOSE AND SOLELY FOR THE EXECUTION OR REVIEW OF THE ENGINEERING CONSTRUCTION OF THE PROJECT".

IT IS A VIOLATION OF THE NEW YORK STATE EDUCATION LAW, ARTICLE 145, FOR ANY PERSON, UNLESS UNDER THE DIRECTION OF A NEW YORK STATE LICENSED PROFESSIONAL ENGINEER, TO ALTER AN ITEM ON THIS DOCUMENT IN ANY WAY.

ISSUED FOR BID - FEBRUARY 2026

NAVFAC

STATE OF NEW YORK
LICENSED PROFESSIONAL ENGINEER
080336
4/21/26

TETRA TECH
www.tetratech.com
4433 CORPORATION LANE, SUITE 300
VIRGINIA BEACH, VA 23462
PHONE: (757) 451-3768 FAX: (757) 451-1148

A/E INFO

APPROVED
FOR COMMANDER NAVFAC

ACTIVITY
As per document from Nicole Cowand, NAVFAC MIDLANT PLL/EV3.

SATISFACTORY TO	DATE 04/24/2026	
DES JJK	DRW JJK	CHK WS

PM/DM
BRANCH MANAGER
CHIEF ENG/ARCH
FIRE PROTECTION

NAVAL FACILITIES ENGINEERING SYSTEMS COMMAND - MID-ATLANTIC
RW09
NAVAL WEAPONS INDUSTRIAL RESERVE PLANT BETHPAGE, NEW YORK
NAVAL INDUSTRIAL RESERVE ORDNANCE PLANT
PHASE III - TREATMENT PLANT
IOP-3 CONTROL PANEL RACK 5 SLOT 2

SCALE: AS NOTED
EPROJECT NO.: -
CONSTR. CONTR. NO.
NAVFAC DRAWING NO. ##
SHEET OF -
EI639

FILE NAME: Y:\03-Projects\Federal\NAVFAC\112026005_WE24_PHASE III GWTP_2023\3. Working Files\Drawings\I&C\EI633 - EI639.dwg LAYOUT NAME: EI639 PLOTTED: Tuesday, April 21, 2026 - 8:04am USER: Bill.Steinbeiter

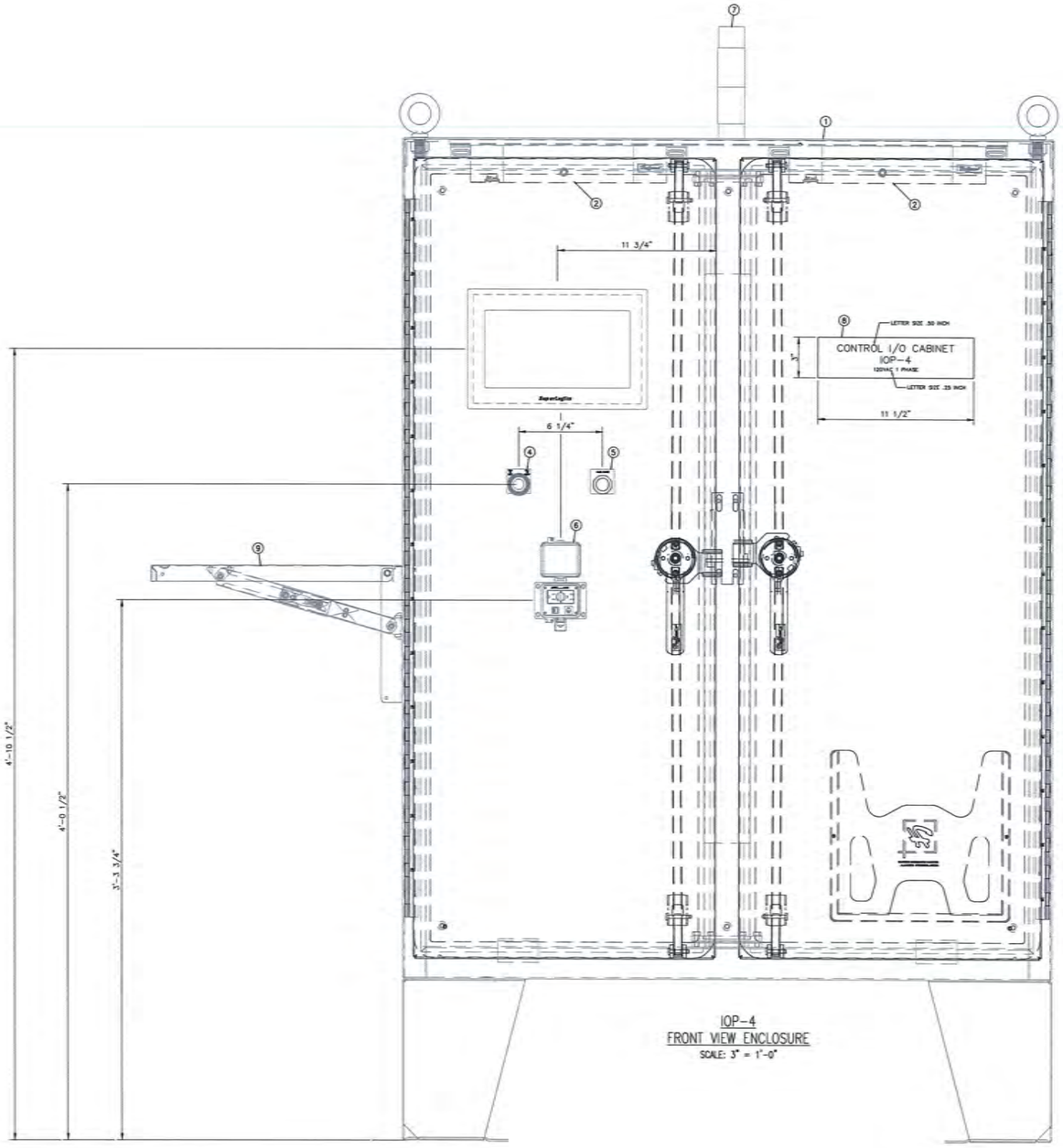

IOP-4
FRONT VIEW ENCLOSURE
SCALE: 3" = 1'-0"

PANEL BILL OF MATERIAL

ITEM	QUAN	DESCRIPTION	SUPPLIER
1	1	FREE STANDING ENCLOSURE WITH 3 POINT LATCHES & FLOOR STANDS 62"H x 48"W x 12"D, NEMA 4X HOFFMAN CAT. NO. A62H4812SSLP3PT (OR EQUAL)	PANEL SHOP
2	2	ENCLOSURE FLUORESCENT LIGHT 120VAC HOFFMAN CAT. NO. LF120V15 (OR EQUAL) POWER CORD WITH LEADS, HOFFMAN CAT. NO. LP72 (OR EQUAL) DOOR SWITCH (2) HOFFMAN CAT. NO. PLFSWD (OR EQUAL)	PANEL SHOP
3	1	OPERATOR HMI SCREEN SUPER LOGICS CAT. NO. SL-PPC-12AWHD-LLH3101-S17 (OR EQUAL)	PANEL SHOP
4	1	E-STOP PUSHBUTON PUSH PULL MAINTAINED, NON-ILLUMINATED, 1 N.C. CONTACT ALLEN-BRADLEY CAT. No. 800T-FX6D4 (OR EQUAL) LEGEND PLATE "PUSH TO STOP -PULL TO START" ALLEN BRADLEY CAT. No. 800H-W196 (OR EQUAL)	PANEL SHOP
5	1	PUSHBUTON, MOMENTARY CONTACT, W / BLACK CAP, 1 N.O. CONTACT ALLEN-BRADLEY CAT. No. 800T-A2D1 (OR EQUAL) CUSTOM LEGEND PLATE MARKED "ALARM SILENCE" ALLEN BRADLEY CAT. No. 800T-X559 (OR EQUAL)	PANEL SHOP
6	1	PANEL INTERFACE CONNECTOR GRACE PORT CAT. NO. P-R2-K3RF3 (OR EQUAL)	PANEL SHOP
7	1	PRE-ASSEMBLED STACK LIGHT SURFACE MOUNTED RED STEADY LED, SINGLE CIRCUIT PIEZO MODULE ALLEN BRADLEY CAT. NNO. 855EC-B24Y4P1	PANEL SHOP
8	AS REQ'D.	PHENOLIC NAMEPLATE 3"H x 11 1/2"W WHITE W/BLACK 1/2" HIGH LETTERS, & 1/4" HIGH LETTERS SEE NAMEPLATE SCHEDULE	PANEL SHOP
9	1	12" x 18" FOLDING SHELF (WHITE) HOFFMAN CAT. No. AASHF1218 (OR EQUAL)	PANEL SHOP

REFERENCE DRAWINGS:

EI640	IOP-4 LAYOUT PANEL & B.O.M
EI641	IOP-4 CONTROL SUB-PANEL LAYOUT & B.O.M
EI642	IOP-4 CONTROL PANEL TERMINAL DETAILS
EI643	IOP-4 CONTROL PANEL 120VAC POWER LADDER
EI644	IOP-4 CONTROL PANEL 24VDC POWER LADDER
EI645	IOP-4 CONTROL PANEL RACK 2 SLOTS 0 & 1 WIRING
EI646	IOP-4 CONTROL PANEL RACK 2 SLOTS 2 & 3 WIRING
EI647	IOP-4 CONTROL PANEL RACK 2 SLOTS 4 & 5 WIRING
EI648	IOP-4 CONTROL PANEL RACK 3 SLOTS 0 & 1 WIRING
EI649	IOP-4 CONTROL PANEL RACK 3 SLOTS 2 & 3 WIRING
TN601	CONTROL SYSTEM ARCHITECTURE

THIS DRAWING PRODUCED ON AUTOCAD
DO NOT REVISE MANUALLY

"THIS DOCUMENT IS THE PROPERTY OF NAVAL FACILITIES ENGINEERING COMMAND, PREPARED BY TETRA TECH ENGINEERING CORPORATION PC, AND IS PROVIDED UPON THE CONDITION THAT IT WILL NOT BE REPRODUCED, COPIED, OR ISSUED TO A THIRD PARTY, AND WILL BE USED SOLELY FOR THE ORIGINAL INTENDED PURPOSE AND SOLELY FOR THE EXECUTION OR REVIEW OF THE ENGINEERING CONSTRUCTION OF THE PROJECT".

IT IS A VIOLATION OF THE NEW YORK STATE EDUCATION LAW, ARTICLE 145, FOR ANY PERSON, UNLESS UNDER THE DIRECTION OF A NEW YORK STATE LICENSED PROFESSIONAL ENGINEER, TO ALTER AN ITEM ON THIS DOCUMENT IN ANY WAY.

ISSUED FOR BID - FEBRUARY 2026

NAVFAC

TETRA TECH
www.tetratech.com
4430 CORPORATION LANE, SUITE 300
VIRGINIA BEACH, VA 23462
PHONE: (757) 451-3708 FAX: (757) 451-4148
A/E INFO

APPROVED
FOR COMMANDER NAVFAC
ACTION
As per document from Nicole Cowand, NAVFAC MIDLANT PLL/CV3.
SATISFACTORY TO DATE 04/24/2026

DES JJK	DRW JJK	CHK WS	
PM/DM			
BRANCH MANAGER			
CHIEF ENG/ARCH			
FIRE PROTECTION			

NAVAL FACILITIES ENGINEERING SYSTEMS COMMAND - MID - ATLANTIC
NAVAL INDUSTRIAL RESERVE ORDNANCE PLANT
INRO9 NAVAL WEAPONS INDUSTRIAL RESERVE PLANT BETHPAGE, NEW YORK
PHASE III - TREATMENT PLANT
IOP-4 CONTROL PANEL LAYOUT & BILL OF MATERIAL

SCALE: AS NOTED
(PROJECT NO.): -
CONSTR. CONTR. NO.
NAVFAC DRAWING NO. ##
SHEET OF
EI640

FILE NAME: Y:\03-Projects\Federal\NAVFAC\112508005_WE24_PHASE III GWTP_2023\3. Working Files\Drawings\MEC\EI640 - EI642.dwg LAYOUT NAME: EI640 PLOTTED: Tuesday, April 21, 2026 - 8:04am USER: Bill.Stonebraker

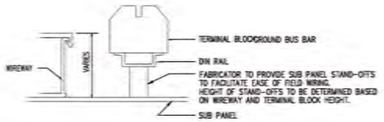

NAMEPLATE SCHEDULE

ITEM	MK NO.	LINE 1	LINE 2
A	42	TBAC	
B	42	TBDC	
C	41	RACK R6	
D	40	R6S0	
E	40	R6S1	
F	40	R6S2	
G	40	R6S3	
H	40	R6S4	
J	40	R6S5	
K	40	R6S6	
L	40	R6S7	
M	42	TBCR	

SUB-PANEL BILL OF MATERIAL

ITEM	QUAN	DESCRIPTION	SUPPLIER
38	18	GROUNDING TERMINAL 300V ALLEN BRADLEY CAT. NO. 1492-JG3	PANEL SHOP
39	1	RELAY MODULE; NOMINAL INPUT VOLTAGE: 24 VDC; 2 CHANGEOVER CONTACT; LIMITING CONTINUOUS CURRENT: 8 A; WITH MAN. OPER.; RED STATUS INDICATOR WAGO 788-312 (OR EQUAL)	PANEL SHOP
40	AS REQ'D.	PHENOLIC NAMEPLATE 1/2"H x 1 1/2"W WHITE W/BLACK 1/4" HIGH LETTERS, SEE NAMEPLATE SCHEDULE	PANEL SHOP
41	AS REQ'D.	PHENOLIC NAMEPLATE 3/4"H x 2"W WHITE W/BLACK 3/8" HIGH LETTERS, SEE NAMEPLATE SCHEDULE	PANEL SHOP
42	AS REQ'D.	PHENOLIC NAMEPLATE 1"H x 3"W WHITE W/BLACK 3/8" HIGH LETTERS, SEE NAMEPLATE SCHEDULE	PANEL SHOP
43	1	ISOLATED GROUND BAR SYSTEM, 200mm, HOFFMAN CAT NO. X-GS2K (OR EQUAL)	PANEL SHOP
44	1	RECEPTACLE 15A GFCI DIN RAIL MOUNTED WEIDMULLER CAT. NO. 6720005422 (OR EQUAL)	PANEL SHOP
45	AS REQ'D.	SLOTTED WIRE DUCT 3"W x 4"H / WITH COVER PANDUIT	PANEL SHOP
46	AS REQ'D.	SLOTTED WIRE DUCT 4"W x 4"H / WITH COVER PANDUIT	PANEL SHOP

SUB-PANEL BILL OF MATERIAL

ITEM	QUAN	DESCRIPTION	SUPPLIER
1	1	SUB-PANEL 56"H x 44"W, HOFFMAN CAT. NO. A60P48 (OR EQUAL)	PANEL SHOP
2	1	FLEX 5000 I/O, ETHERNET ADAPTER ALLEN BRADLEY CAT. NO. 5094-AENTR	PANEL SHOP
3	8	FLEX 5000 I/O, MOUNTING BASE ALLEN BRADLEY CAT. NO. 5094-MB	PANEL SHOP
4	3	FLEX 5000 I/O, SHIELD BAR ALLEN BRADLEY CAT. NO. 5094-STB	PANEL SHOP
5	3	FLEX 5000 I/O, TERMINAL BASE FOR 5094-IF8IH ALLEN BRADLEY CAT. NO. 5094-RTB3I	PANEL SHOP
6	5	FLEX 5000 I/O, REMOVABLE TERMINAL BASE FOR 5094-IB16, 5094-OB16, 5094-IA16, 5094-OA16 ALLEN BRADLEY CAT. NO. 5094-RTB3	PANEL SHOP
7	2	FLEX 5000 I/O, ANALOG 8 INPUT ISOLATED HART MODULE ALLEN BRADLEY CAT. NO. 5094-IF8IH	PANEL SHOP
8	1	FLEX 5000 I/O, ANALOG 8 OUTPUT MODULE ALLEN BRADLEY CAT. NO. 5094-OF8	PANEL SHOP
9	2	FLEX 5000 I/O, 24VDC 16 DIGITAL INPUT MODULE ALLEN BRADLEY CAT. NO. 5094-IB16	PANEL SHOP
10	1	FLEX 5000 I/O, 24VDC 16 DIGITAL OUTPUT MODULE ALLEN BRADLEY CAT. NO. 5094-OB16	PANEL SHOP
11	1	FLEX 5000 I/O, 120VAC 16 DIGITAL INPUT MODULE ALLEN BRADLEY CAT. NO. 5094-IA16	PANEL SHOP
12	1	FLEX 5000 I/O, 120VAC 16 DIGITAL OUTPUT MODULE ALLEN BRADLEY CAT. NO. 5094-OA16	PANEL SHOP
13	1	POWER SUPPLY QUINT PS/1AC/24DC/10A, DC OK ACTIVE PHEONIX CONTACT CAT. NO. 286673	PANEL SHOP
14	1	ETHERNET SWITCH 6 RJ-45 COPPER PORTS NTRON CAT. NO. 306TX	PANEL SHOP
15	1	SOLA INDUSTRIAL UPS 120VAC, 60HZ, 500VA, 300W, 4 MINUTE BACK UP TIME SOLA CAT. NO. SDU-500	PANEL SHOP
16	1	SOLA FORM C DRY CONTACT SOLA CAT. NO. RELAYCARD-SDU	PANEL SHOP
17	48	UT 4-L/HESID 24 W/ BLOWN FUSE INDICATOR, 5 X 20 mm FUSE HOLDER FOR 5094-IB16 & 5094-OB16 PHOENIX CONTACT CAT. NO. 3214366	PANEL SHOP
18	32	UT 4-L/HESI W/ BLOWN FUSE INDICATOR, 5 X 20 mm FUSE HOLDER FOR 5094-IA16 & 5094-OA16 PHOENIX CONTACT CAT. NO. 3214325	PANEL SHOP
19	24	TRI LEVEL DISCONNECT TERMINAL BLOCK FOR 5094-IF8IH & 5094-OF8 PHOENIX CONTACT CAT. NO. 3214325	PANEL SHOP
20	12	END BRACKET FOR NS 35 MOUNTING RAIL TYPE E/UK 1 (DOUBLE/TRIPPLE/LEVEL TERM) PHOENIX CONTACT CAT. NO. 201413	PANEL SHOP
21	48	FUSE 5x20mm RATING 1/2 AMP 5mm x 20mm BUSSMAN GMA	PANEL SHOP
22	32	FUSE 5x20mm RATING 2 AMP 5mm x 20mm BUSSMAN GMA	PANEL SHOP
23	AS REQ'D.	TS 35 x 7.5 mm SLOTTED STEEL DIN RAIL (ALUMINUM NOT ACCEPTED) ALLEN BRADLEY CAT. NO. 1492-EAHJ35 (OR EQUAL)	PANEL SHOP
24	3	GROUP MARKER ALLEN BRADLEY CAT. NO. 1492-GM35 (OR EQUAL)	PANEL SHOP
25	12	END ANCHOR ALLEN BRADLEY CAT. NO. 1492-ERL35 (OR EQUAL)	PANEL SHOP
26	1	20 AMP CIRCUIT BREAKER 1 POLE ALLEN BRADLEY CAT. NO. 1489-A1C200 (OR EQUAL)	PANEL SHOP
27	1	15 AMP CIRCUIT BREAKER 1 POLE ALLEN BRADLEY CAT. NO. 1489-A1C150 (OR EQUAL)	PANEL SHOP
28	1	10 AMP CIRCUIT BREAKER 1 POLE ALLEN BRADLEY CAT. NO. 1489-A1C100 (OR EQUAL)	PANEL SHOP
29	2	5 AMP CIRCUIT BREAKER 1 POLE ALLEN BRADLEY CAT. NO. 1489-A1C050 (OR EQUAL)	PANEL SHOP
30	32	2 AMP CIRCUIT BREAKER 1 POLE ALLEN BRADLEY CAT. NO. 1492-GH020 (OR EQUAL)	PANEL SHOP
31	18	FEED THROUGH TERMINAL 600V ALLEN BRADLEY CAT. NO. 1492-J4BL (OR EQUAL)	PANEL SHOP
32	2	PARTITION PLATE ALLEN BRADLEY CAT. NO. 1492-EBJ16 (OR EQUAL)	PANEL SHOP
33	18	GROUND BLOCK TERMINAL 600V ALLEN BRADLEY CAT. NO. 1492 (OR EQUAL)	PANEL SHOP
34	AS REQ'D.	MARKING SYSTEM (FOR 600V TERMINALS ALLEN BRADLEY CAT. NO. 1492-MR6X12 (OR EQUAL)	PANEL SHOP
35	18	FEED THROUGH TERMINAL 300V ALLEN BRADLEY CAT. NO. 1492-WM4 (OR EQUAL)	PANEL SHOP
36	2	PARTITION PLATE ALLEN BRADLEY CAT. NO. 1492-PPM3 (OR EQUAL)	PANEL SHOP
37	AS REQ'D.	MARKING SYSTEM (FOR 300V TERMINALS) ALLEN BRADLEY CAT. NO. 1492-MR6X9 (OR EQUAL)	PANEL SHOP

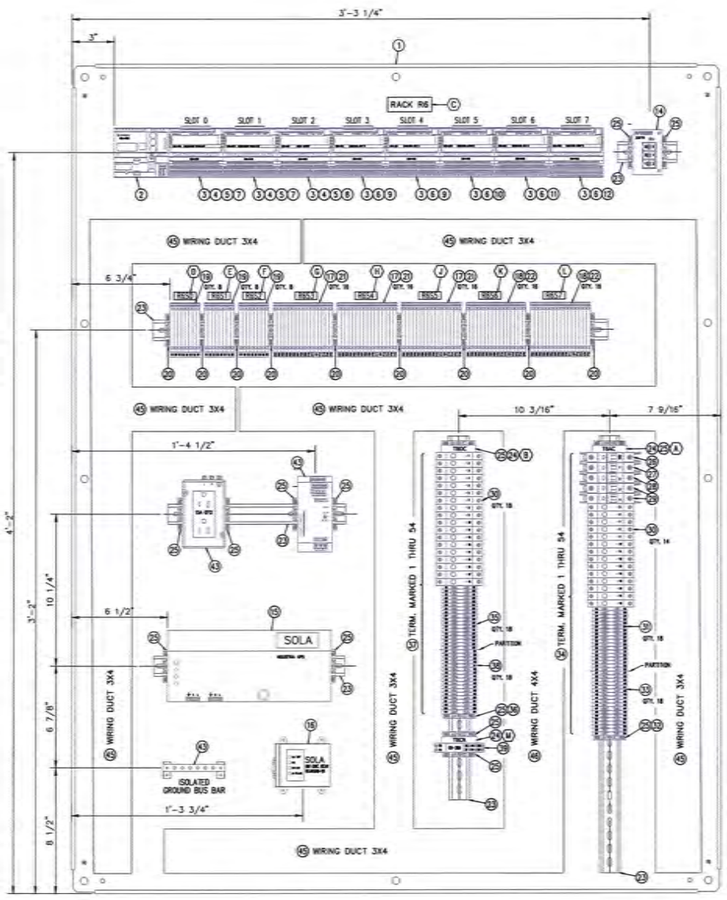

IOP-4
SUBPANEL ARRANGEMENT
SCALE: 3" = 1'-0"

NOTES:

1. ALL TERMINAL BLOCKS TO BE NUMBERED WITH PREPRINTED LABELS.
2. ALL WIRING TO HAVE IMPRINTED SHRINK TUBING ID LABELS.
3. PANEL SHOP TO INSTALL STAND-OFFS UNDER DIN RAIL TO BRING TERMINALS FLUSH WITH TOP OF WIRING DUCT.

REFERENCE DRAWINGS:

E640 IOP-4 LAYOUT PANEL & B.O.M
E641 IOP-4 CONTROL SUB-PANEL LAYOUT & B.O.M
E642 IOP-4 CONTROL PANEL TERMINAL DETAILS
E643 IOP-4 CONTROL PANEL 120VAC POWER LADDER
E644 IOP-4 CONTROL PANEL 24VDC POWER LADDER
E645 IOP-4 CONTROL PANEL RACK 2 SLOTS 0 & 1 WIRING
E646 IOP-4 CONTROL PANEL RACK 2 SLOTS 2 & 3 WIRING
E647 IOP-4 CONTROL PANEL RACK 2 SLOTS 4 & 5 WIRING
E648 IOP-4 CONTROL PANEL RACK 3 SLOTS 0 & 1 WIRING
E649 IOP-4 CONTROL PANEL RACK 3 SLOTS 2 & 3 WIRING
TN601 CONTROL SYSTEM ARCHITECTURE

THIS DRAWING PRODUCED ON AUTOCAD
DO NOT REVISE MANUALLY

"THIS DOCUMENT IS THE PROPERTY OF NAVAL FACILITIES ENGINEERING COMMAND, PREPARED BY TETRA TECH ENGINEERING CORPORATION PC, AND IS PROVIDED UPON THE CONDITION THAT IT WILL NOT BE REPRODUCED, COPIED, OR ISSUED TO A THIRD PARTY, AND WILL BE USED SOLELY FOR THE ORIGINAL INTENDED PURPOSE AND SOLELY FOR THE EXECUTION OR REVIEW OF THE ENGINEERING CONSTRUCTION OF THE PROJECT".

IT IS A VIOLATION OF THE NEW YORK STATE EDUCATION LAW, ARTICLE 145, FOR ANY PERSON, UNLESS UNDER THE DIRECTION OF A NEW YORK STATE LICENSED PROFESSIONAL ENGINEER, TO ALTER AN ITEM ON THIS DOCUMENT IN ANY WAY.

ISSUED FOR BID - FEBRUARY 2026

NAVFAC

TETRA TECH
www.tetratech.com
4430 CORPORATION LANE, SUITE 300
VIRGINIA BEACH, VA 23462
PHONE: (757) 461-3755 FAX: (757) 461-4148
A/E INFO

APPROVED
FOR COMMANDER NAVFAC
ACTIVITY: As per document from Nicole Cowans, NAVFAC MIDLANT PW_FEV3
SATISFACTORY TO DATE 04/24/2026
DES JJK DRN JJK CHK WS
PM/CM
BRANCH MANAGER
CHIEF ENG./ARCH
FIRE PROTECTION

NAVAL FACILITIES ENGINEERING SYSTEMS COMMAND - MID - ATLANTIC
NAVAL INDUSTRIAL RESERVE ORDNANCE PLANT
NAVAL WEAPONS INDUSTRIAL RESERVE PLANT BETHPAGE, NEW YORK
PHASE III - TREATMENT PLANT
IOP-4 SUB-PANEL LAYOUT & BILL OF MATERIAL
RW09

SCALE: AS NOTED
CPROJECT NO.: -
CONSTR. CONTR. NO.
NAVFAC DRAWING NO. ##
SHEET OF -
E1641

UNCLASSIFIED

FILE NAME: Y:\03-Projects\Federal\NAVFAC\112G08000_WK24_PHASE III GWTP_2023\3- Working Files\Drawings\Arc\U640 - E1642.dwg LAYOUT NAME: E1641 PLOTTED: Tuesday, April 21, 2026 - 8:00am USER: Bill.Steinbrecker

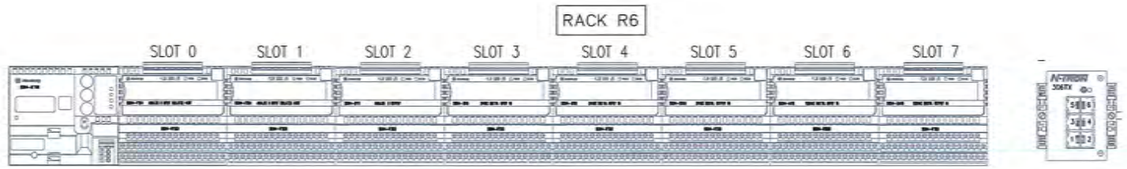

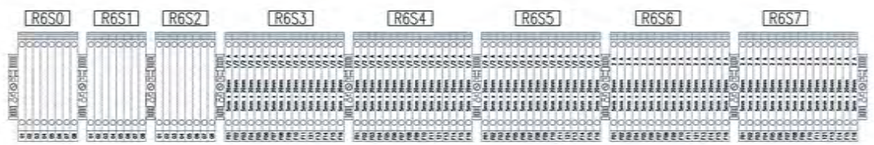

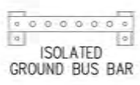

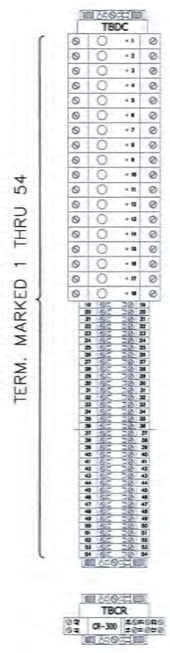

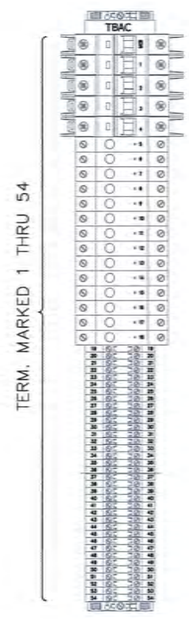

REFERENCE DRAWINGS:

EI640	IOP-4 LAYOUT PANEL & B.O.M
EI641	IOP-4 CONTROL SUB-PANEL LAYOUT & B.O.M
EI642	IOP-4 CONTROL PANEL TERMINAL DETAILS
EI643	IOP-4 CONTROL PANEL 120VAC POWER LADDER
EI644	IOP-4 CONTROL PANEL 24VDC POWER LADDER
EI645	IOP-4 CONTROL PANEL RACK 2 SLOTS 0 & 1 WIRING
EI646	IOP-4 CONTROL PANEL RACK 2 SLOTS 2 & 3 WIRING
EI647	IOP-4 CONTROL PANEL RACK 2 SLOTS 4 & 5 WIRING
EI648	IOP-4 CONTROL PANEL RACK 3 SLOTS 0 & 1 WIRING
EI649	IOP-4 CONTROL PANEL RACK 3 SLOTS 2 & 3 WIRING
TN601	CONTROL SYSTEM ARCHITECTURE

THIS DRAWING PRODUCED ON AUTOCAD
DO NOT REVISE MANUALLY

"THIS DOCUMENT IS THE PROPERTY OF NAVAL FACILITIES ENGINEERING COMMAND, PREPARED BY TETRA TECH ENGINEERING CORPORATION PC, AND IS PROVIDED UPON THE CONDITION THAT IT WILL NOT BE REPRODUCED, COPIED, OR ISSUED TO A THIRD PARTY, AND WILL BE USED SOLELY FOR THE ORIGINAL INTENDED PURPOSE AND SOLELY FOR THE EXECUTION OR REVIEW OF THE ENGINEERING CONSTRUCTION OF THE PROJECT".

IT IS A VIOLATION OF THE NEW YORK STATE EDUCATION LAW, ARTICLE 145, FOR ANY PERSON, UNLESS UNDER THE DIRECTION OF A NEW YORK STATE LICENSED PROFESSIONAL ENGINEER, TO ALTER AN ITEM ON THIS DOCUMENT IN ANY WAY.

ISSUED FOR BID - FEBRUARY 2026

NAVFAC

STATE OF NEW YORK
4/24/26
ALBANY, PROFESSIONAL ENGINEER

TETRA TECH
www.tetratech.com
4433 CORPORATION LANE, SUITE 300
VIRGINIA BEACH, VA 23462
PHONE: (757) 461-3788 FAX: (757) 461-4148
A/E INFO

APPROVED
TOP COMMAND NAVFAC

ACTIVITY
As per document from Nicole Cowans, NAVFAC MID/ANF
Plu/EV3

SATISFACTORY TO DATE 04/24/2026

DES. JJK	DRW JJK	CHK WS

PM/CM
BRANCH MANAGER
CHIEF ENG/ARCH
FIRE PROTECTION

NAVAL FACILITIES ENGINEERING SYSTEMS COMMAND - MID - ATLANTIC
NAVAL INDUSTRIAL RESERVE ORDNANCE PLANT
NAVAL WEAPONS INDUSTRIAL RESERVE PLANT BETHPAGE, NEW YORK
PHASE III - TREATMENT PLANT
IOP-4 CONTROL TERMINAL DETAILS

REV09

SCALE:	AS NOTED
EPROJECT NO.:	-
CONSTR. CONTR. NO.	
NAVFAC DRAWING NO.	##
SHEET	OF -

EI642

FILE NAME: I:\03-Projects\Federal\NAVFAC\112608005_WC24_PHASE III GWTP_2023\3. Working Files\Drawings\IAC\EI640 - EI642.dwg LAYOUT NAME: EI642 PLOTTED: Tuesday, April 21, 2026 - 8:05am USER: Bill.Stonebraker

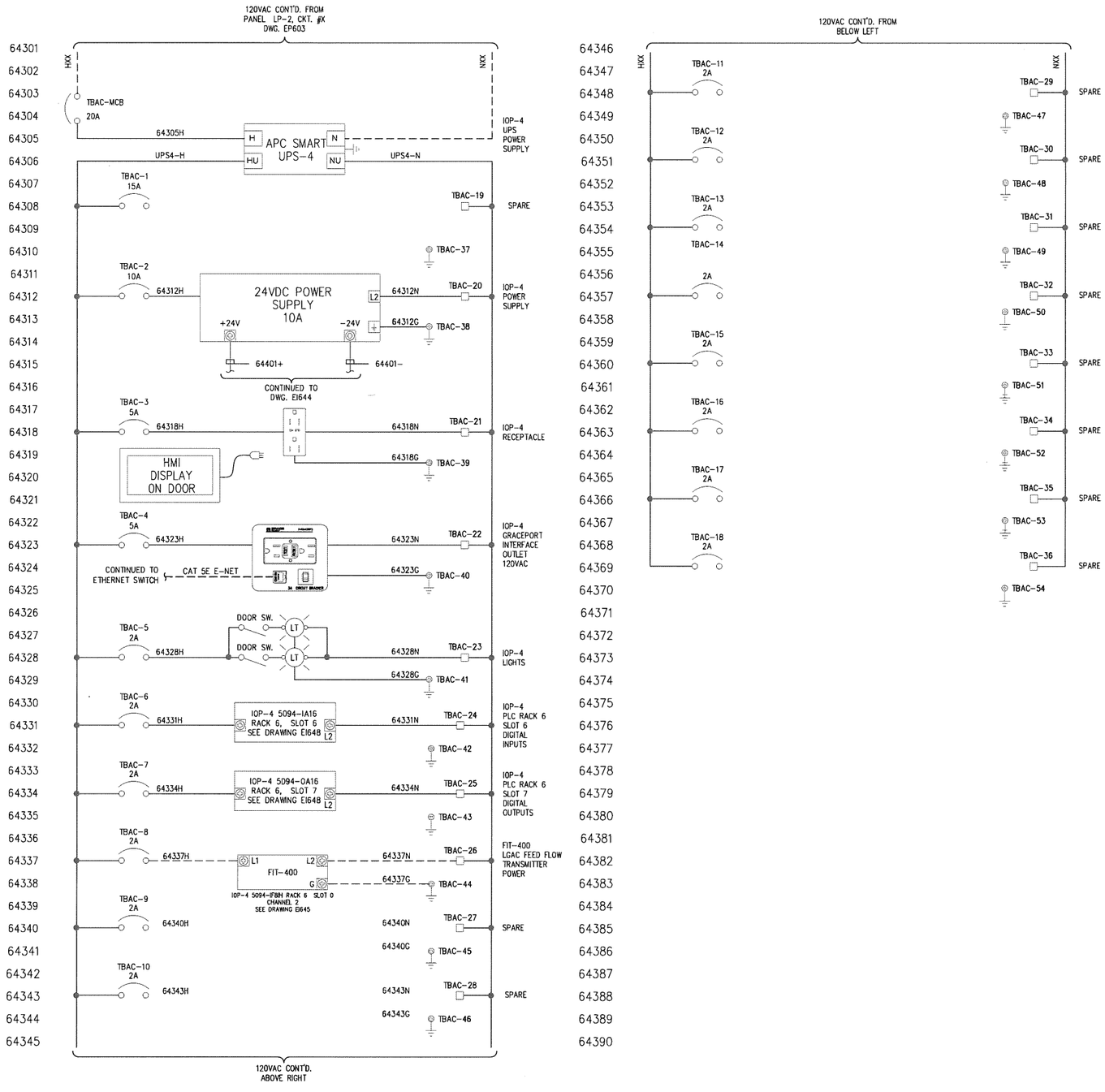

LEGEND:

———— INTERNAL PANEL WIRING (BY PANEL FABRICATOR)

– – – – – – EXTERNAL PANEL WIRING (BY ELECTRICAL CONTRACTOR)

REFERENCE DRAWINGS:

EI640	IOP-4 LAYOUT PANEL & B.O.M
EI641	IOP-4 CONTROL SUB-PANEL LAYOUT & B.O.M
EI642	IOP-4 CONTROL PANEL TERMINAL DETAILS
EI643	IOP-4 CONTROL PANEL 120VAC POWER LADDER
EI644	IOP-4 CONTROL PANEL 24VDC POWER LADDER
EI645	IOP-4 CONTROL PANEL RACK 6 SLOTS 0 & 1 WIRING
EI646	IOP-4 CONTROL PANEL RACK 6 SLOTS 2 & 3 WIRING
EI647	IOP-4 CONTROL PANEL RACK 6 SLOTS 4 & 5 WIRING
EI648	IOP-4 CONTROL PANEL RACK 6 SLOTS 6 & 7 WIRING
EI649	NOT USED
TN601	CONTROL SYSTEM ARCHITECTURE

THIS DRAWING PRODUCED ON AUTOCAD DO NOT REVISE MANUALLY

"THIS DOCUMENT IS THE PROPERTY OF NAVAL FACILITIES ENGINEERING COMMAND, PREPARED BY TETRA TECH ENGINEERING CORPORATION PC, AND IS PROVIDED UPON THE CONDITION THAT IT WILL NOT BE REPRODUCED, COPIED, OR ISSUED TO A THIRD PARTY, AND WILL BE USED SOLELY FOR THE ORIGINAL INTENDED PURPOSE AND SOLELY FOR THE EXECUTION OR REVIEW OF THE ENGINEERING CONSTRUCTION OF THE PROJECT".

IT IS A VIOLATION OF THE NEW YORK STATE EDUCATION LAW, ARTICLE 145, FOR ANY PERSON, UNLESS UNDER THE DIRECTION OF A NEW YORK STATE LICENSED PROFESSIONAL ENGINEER, TO ALTER AN ITEM ON THIS DOCUMENT IN ANY WAY.

ISSUED FOR BID - FEBRUARY 2026

NAVFAC

STATE OF NEW YORK — LICENSED PROFESSIONAL ENGINEER — 080336 — 4/24/26

TETRA TECH
www.tetratech.com
4433 CORPORATION LANE, SUITE 300
VIRGINIA BEACH, VA 23462
PHONE: (757) 461-3768 FAX: (757) 461-4148
A/E INFO

APPROVED
FOR COMMANDER NAVFAC
ACTIVITY: As per document from Nicole Cowand, NAVFAC MIDLANT PLL/EV3.
SATISFACTORY TO DATE 04/24/2026

DES	DRW	CHK
JJK	JJK	WS

PM/DM
BRANCH MANAGER
CHIEF ENG/ARCH
FIRE PROTECTION

NAVAL FACILITIES ENGINEERING SYSTEMS COMMAND - MID - ATLANTIC
RWDS NAVAL INDUSTRIAL RESERVE ORDNANCE PLANT
NAVAL WEAPONS INDUSTRIAL RESERVE PLANT BETHPAGE, NEW YORK
PHASE III - TREATMENT PLANT

IOP-4 CONTROL PANEL 120VAC POWER LADDER

SCALE: AS NOTED
EPROJECT NO.: -
CONSTR. CONTR. NO.
NAVFAC DRAWING NO. ##
SHEET OF -

EI643

FILE NAME: F:\03-Projects\Federal\NAVFAC\120080905_WE24_PHASE III GWTP_2023\3. Working Files\Drawings\UACS\EI643 - EI648.dwg LAYOUT NAME: EI643 PLOTTED: Tuesday, April 21, 2026 - 8:06am USER: Bill.Stanebreker

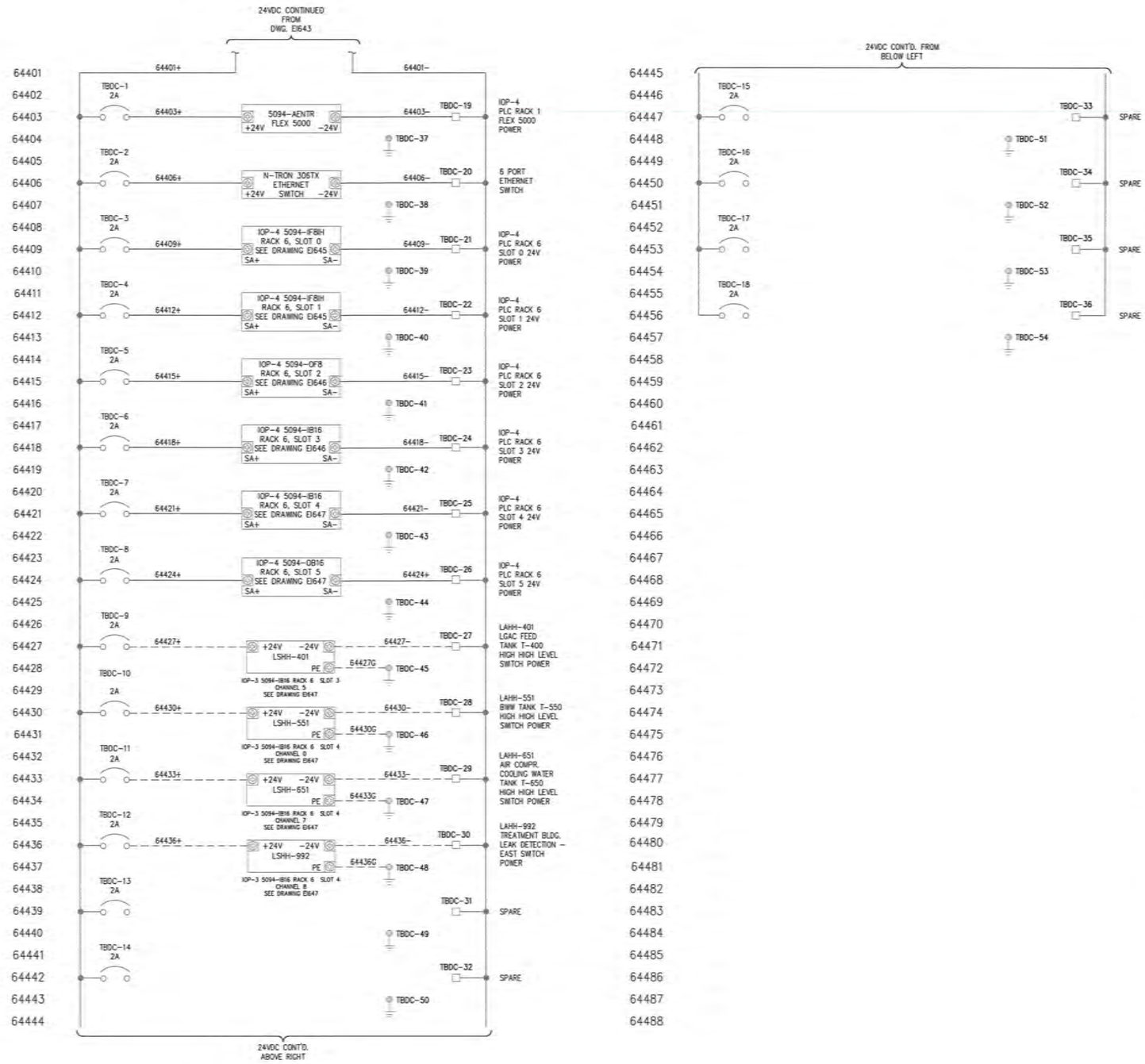

LEGEND:

——— INTERNAL PANEL WIRING (BY PANEL FABRICATOR)

- - - - - - EXTERNAL PANEL WIRING (BY ELECTRICAL CONTRACTOR)

REFERENCE DRAWINGS:

EI640	IOP-4 LAYOUT PANEL & B.O.M
EI641	IOP-4 CONTROL SUB-PANEL LAYOUT & B.O.M
EI642	IOP-4 CONTROL PANEL TERMINAL DETAILS
EI643	IOP-4 CONTROL PANEL 120VAC POWER LADDER
EI644	IOP-4 CONTROL PANEL 24VDC POWER LADDER
EI645	IOP-4 CONTROL PANEL RACK 6 SLOTS 0 & 1 WIRING
EI646	IOP-4 CONTROL PANEL RACK 6 SLOTS 2 & 3 WIRING
EI647	IOP-4 CONTROL PANEL RACK 6 SLOTS 4 & 5 WIRING
EI648	IOP-4 CONTROL PANEL RACK 6 SLOTS 6 & 7 WIRING
EI649	NOT USED
TN601	CONTROL SYSTEM ARCHITECTURE

THIS DRAWING PRODUCED ON AUTOCAD
DO NOT REVISE MANUALLY!

"THIS DOCUMENT IS THE PROPERTY OF NAVAL FACILITIES ENGINEERING COMMAND, PREPARED BY TETRA TECH ENGINEERING CORPORATION PC, AND IS PROVIDED UPON THE CONDITION THAT IT WILL NOT BE REPRODUCED, COPIED, OR ISSUED TO A THIRD PARTY, AND WILL BE USED SOLELY FOR THE ORIGINAL INTENDED PURPOSE AND SOLELY FOR THE EXECUTION OR REVIEW OF THE ENGINEERING CONSTRUCTION OF THE PROJECT".

IT IS A VIOLATION OF THE NEW YORK STATE EDUCATION LAW, ARTICLE 145, FOR ANY PERSON, UNLESS UNDER THE DIRECTION OF A NEW YORK STATE LICENSED PROFESSIONAL ENGINEER, TO ALTER AN ITEM ON THIS DOCUMENT IN ANY WAY.

ISSUED FOR BID - FEBRUARY 2026

NAVFAC

TETRA TECH
www.tetratech.com
4400 CORPORATION LANE, SUITE 200
VIRGINIA BEACH, VA 23462
PHONE: (757) 461-3700 FAX: (757) 461-4148
A/E INFO

APPROVED
FOR COMMANDER NAVFAC

ACTION
As per document from Nicole Cowene, NAVFAC MIDLANT PLL/EV3

SATISFACTORY TO DATE 04/24/2026

DES JJK DRW JJK CHK WS
PM/CM
BRANCH MANAGER
CHIEF ENG/ARCH
FIRE PROTECTION

NAVAL FACILITIES ENGINEERING SYSTEMS COMMAND - MID - ATLANTIC
NAVAL INDUSTRIAL RESERVE ORDNANCE PLANT
NAVAL WEAPONS INDUSTRIAL RESERVE PLANT BETHPAGE, NEW YORK
PHASE III - TREATMENT PLANT
IOP-4 CONTROL PANEL 24VDC POWER LADDER

SCALE: AS NOTED
EPROJECT NO.: -
CONSTR. CONTR. NO.
NAVFAC DRAWING NO. ##
SHEET OF -
EI644

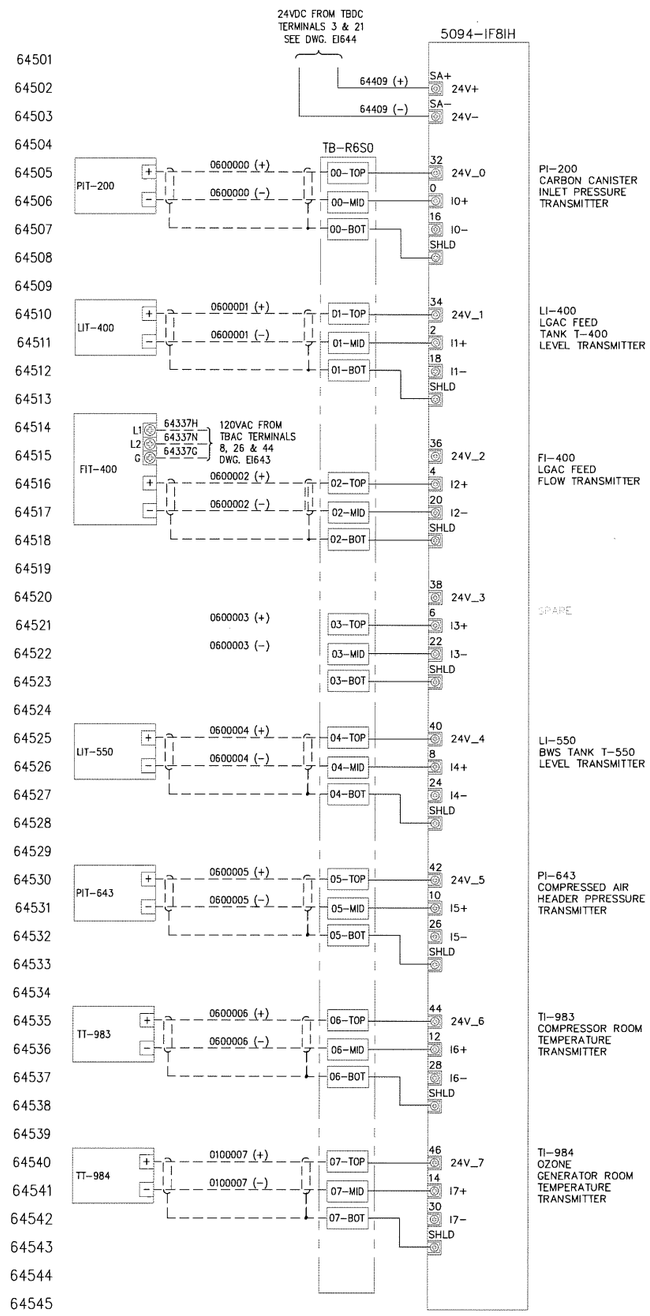

A-B PT# 5094-IF8IH
AI, 4-20mA, HART, 8CHN
RACK 6, SLOT 0

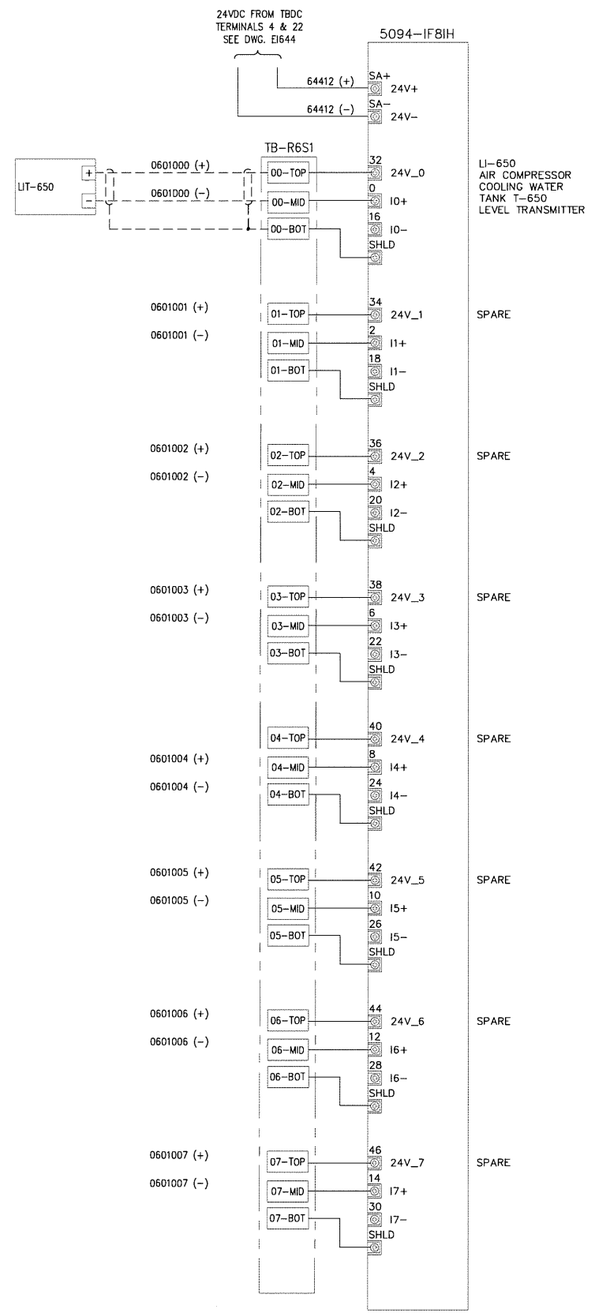

A-B PT# 5094-IF8IH
AI, 4-20mA, HART, 8CHN
RACK 6, SLOT 1

LEGEND:

——————— INTERNAL PANEL WIRING (BY PANEL FABRICATOR)

- - - - - - EXTERNAL PANEL WIRING (BY ELECTRICAL CONTRACTOR)

REFERENCE DRAWINGS:

EI640	IOP-4 LAYOUT PANEL & B.O.M
EI641	IOP-4 CONTROL SUB-PANEL LAYOUT & B.O.M
EI642	IOP-4 CONTROL PANEL TERMINAL DETAILS
EI643	IOP-4 CONTROL PANEL 120VAC POWER LADDER
EI644	IOP-4 CONTROL PANEL 24VDC POWER LADDER
EI645	IOP-4 CONTROL PANEL RACK 6 SLOTS 0 & 1 WIRING
EI646	IOP-4 CONTROL PANEL RACK 6 SLOTS 2 & 3 WIRING
EI647	IOP-4 CONTROL PANEL RACK 6 SLOTS 4 & 5 WIRING
EI648	IOP-4 CONTROL PANEL RACK 6 SLOTS 6 & 7 WIRING
EI649	NOT USED
TN601	CONTROL SYSTEM ARCHITECTURE

THIS DRAWING PRODUCED ON AUTOCAD
DO NOT REVISE MANUALLY

"THIS DOCUMENT IS THE PROPERTY OF NAVAL FACILITIES ENGINEERING COMMAND, PREPARED BY TETRA TECH ENGINEERING CORPORATION PC, AND IS PROVIDED UPON THE CONDITION THAT IT WILL NOT BE REPRODUCED, COPIED, OR ISSUED TO A THIRD PARTY, AND WILL BE USED SOLELY FOR THE ORIGINAL INTENDED PURPOSE AND SOLELY FOR THE EXECUTION OR REVIEW OF THE ENGINEERING CONSTRUCTION OF THE PROJECT".

IT IS A VIOLATION OF THE NEW YORK STATE EDUCATION LAW, ARTICLE 145, FOR ANY PERSON, UNLESS UNDER THE DIRECTION OF A NEW YORK STATE LICENSED PROFESSIONAL ENGINEER, TO ALTER AN ITEM ON THIS DOCUMENT IN ANY WAY.

ISSUED FOR BID - FEBRUARY 2026

NAVFAC

STATE OF NEW YORK
LICENSED PROFESSIONAL ENGINEER
060356
4/21/26

TETRA TECH
www.tetratech.com
4433 CORPORATION LANE, SUITE 300
VIRGINIA BEACH, VA 23462
PHONE: (757) 451-3798 FAX: (757) 451-4148
A/E INFO

APPROVED
FOR COMMANDER NAVFAC
ACTIVITY
As per document from Nicole Cowand, NAVFAC MIDLANT PLL/EV3.
SATISFACTORY TO DATE 04/24/2026
DES JJK DRW JJK CHK WS
PM/DM
BRANCH MANAGER
CHIEF ENG/ARCH
FIRE PROTECTION

NAVAL FACILITIES ENGINEERING SYSTEMS COMMAND - MID - ATLANTIC
NAVAL INDUSTRIAL RESERVE ORDNANCE PLANT
RW09
NAVAL WEAPONS INDUSTRIAL RESERVE PLANT BETHPAGE, NEW YORK
PHASE III - TREATMENT PLANT
IOP-4 CONTROL PANEL RACK 6 SLOTS 0 & 1

SCALE: AS NOTED
EPROJECT NO.: -
CONSTR. CONTR. NO.
NAVFAC DRAWING NO. ##
SHEET OF -
EI645

UNCLASSIFIED

FILE NAME: Y:\03-Projects\Federal\NAVFAC\112038005_W52A_PHASE III GWTP_2023\3. Working Files\Drawings\IAC\EI643 - EI648.dwg LAYOUT NAME: EI645 PLOTTED: Tuesday, April 21, 2026 - 8:07am USER: Bill.Stonebraker

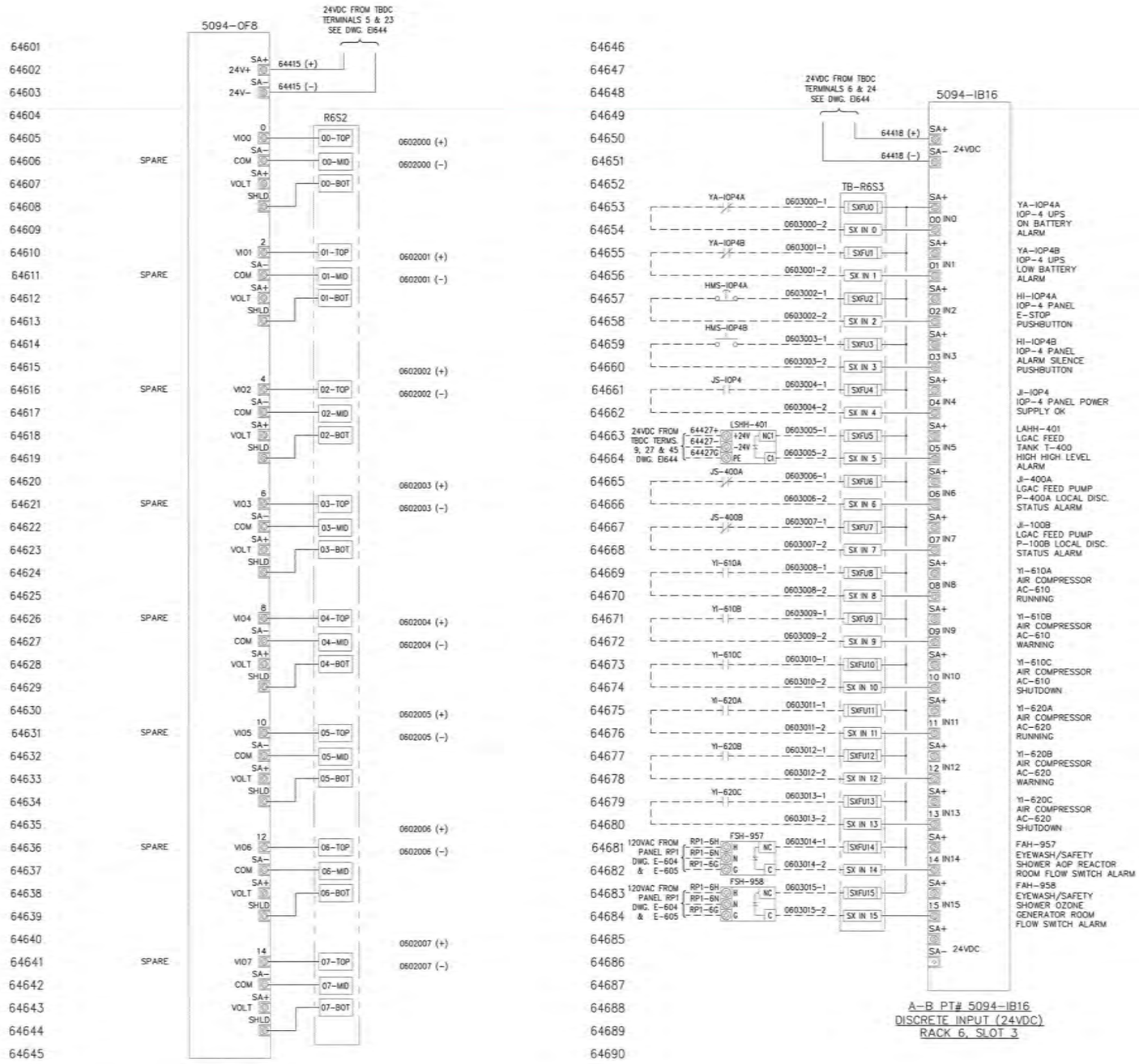

A-B PT# 5094-OF8
ANALOG OUTPUT, 8CHN
RACK 6, SLOT 2

A-B PT# 5094-IB16
DISCRETE INPUT (24VDC)
RACK 6, SLOT 3

LEGEND:

——— INTERNAL PANEL WIRING (BY PANEL FABRICATOR)

- - - - - - EXTERNAL PANEL WIRING (BY ELECTRICAL CONTRACTOR)

REFERENCE DRAWINGS:

EI640	IOP-4 LAYOUT PANEL & B.O.M
EI641	IOP-4 CONTROL SUB-PANEL LAYOUT & B.O.M
EI642	IOP-4 CONTROL PANEL TERMINAL DETAILS
EI643	IOP-4 CONTROL PANEL 120VAC POWER LADDER
EI644	IOP-4 CONTROL PANEL 24VDC POWER LADDER
EI645	IOP-4 CONTROL PANEL RACK 6 SLOTS 0 & 1 WIRING
EI646	IOP-4 CONTROL PANEL RACK 6 SLOTS 2 & 3 WIRING
EI647	IOP-4 CONTROL PANEL RACK 6 SLOTS 4 & 5 WIRING
EI648	IOP-4 CONTROL PANEL RACK 6 SLOTS 6 & 7 WIRING
EI649	NOT USED
TN601	CONTROL SYSTEM ARCHITECTURE

THIS DRAWING PRODUCED ON AUTOCAD DO NOT REVISE MANUALLY

"THIS DOCUMENT IS THE PROPERTY OF NAVAL FACILITIES ENGINEERING COMMAND, PREPARED BY TETRA TECH ENGINEERING CORPORATION PC, AND IS PROVIDED UPON THE CONDITION THAT IT WILL NOT BE REPRODUCED, COPIED, OR ISSUED TO A THIRD PARTY, AND WILL BE USED SOLELY FOR THE ORIGINAL INTENDED PURPOSE AND SOLELY FOR THE EXECUTION OR REVIEW OF THE ENGINEERING CONSTRUCTION OF THE PROJECT".

IT IS A VIOLATION OF THE NEW YORK STATE EDUCATION LAW, ARTICLE 145, FOR ANY PERSON, UNLESS UNDER THE DIRECTION OF A NEW YORK STATE LICENSED PROFESSIONAL ENGINEER, TO ALTER AN ITEM ON THIS DOCUMENT IN ANY WAY.

ISSUED FOR BID - FEBRUARY 2026

NAVFAC

TETRA TECH
www.tetratech.com
4430 CORPORATION LANE, SUITE 300
VIRGINIA BEACH, VA 23462
PHONE: (757) 461-3768 FAX: (757) 461-4148
A/E INFO

APPROVED
FOR COMMANDER NAVFAC

ACTIVITY
As per document from Nicole Coward, NAVFAC MIDLANT PLL/DV3.

SATISFACTORY TO DATE 04/24/2026
DES JJK DRW JJK CHK WS
PM/DM
BRANCH MANAGER
CHIEF ENG/ARCH
FIRE PROTECTION

NAVAL FACILITIES ENGINEERING SYSTEMS COMMAND - MID - ATLANTIC
NAVAL INDUSTRIAL RESERVE ORDNANCE PLANT
NAVAL WEAPONS INDUSTRIAL RESERVE PLANT BETHPAGE, NEW YORK
PHASE III - TREATMENT PLANT
IOP-4 CONTROL PANEL RACK 6 SLOTS 2 & 3

SCALE: AS NOTED
PROJECT NO.:
CONTR. CONTR. NO.
NAVFAC DRAWING NO. ##
SHEET OF
EI646

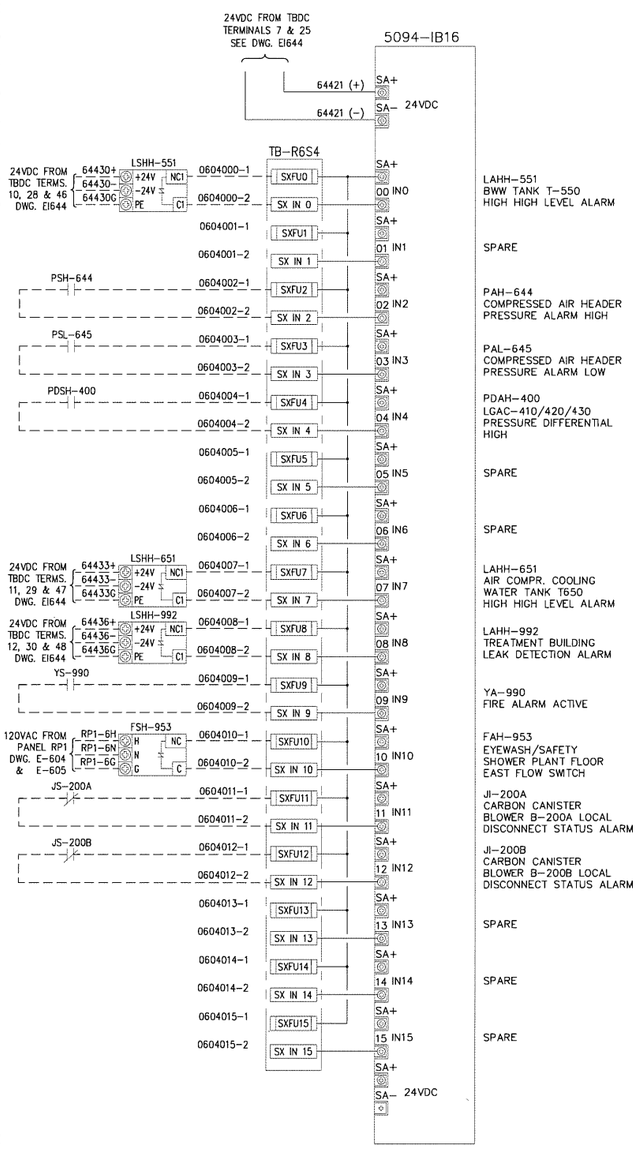

A-B PT# 5094-IB16
DISCRETE INPUT (24VDC)
RACK 6, SLOT 4

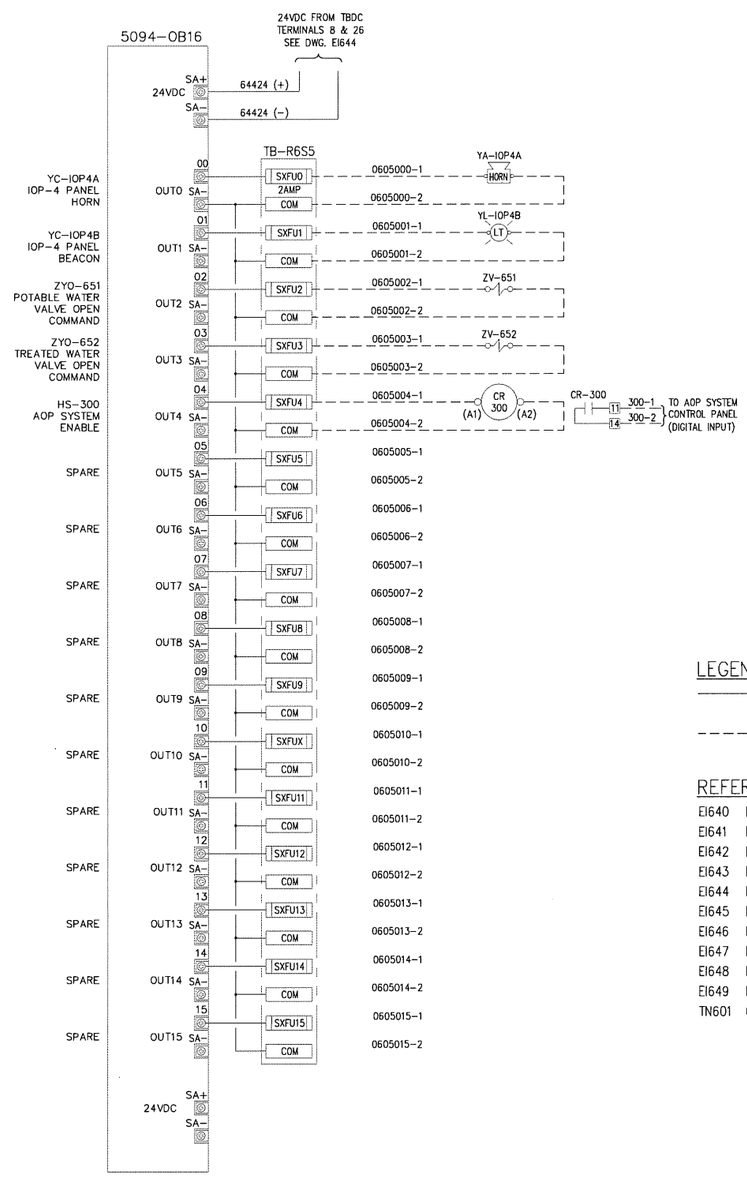

A-B PT# 5094-OB16
DISCRETE OUTPUT (24VDC)
RACK 6, SLOT 5

LEGEND:

——————— INTERNAL PANEL WIRING (BY PANEL FABRICATOR)

– – – – – – EXTERNAL PANEL WIRING (BY ELECTRICAL CONTRACTOR)

REFERENCE DRAWINGS:

EI640	IOP-4 LAYOUT PANEL & B.O.M
EI641	IOP-4 CONTROL SUB-PANEL LAYOUT & B.O.M
EI642	IOP-4 CONTROL PANEL TERMINAL DETAILS
EI643	IOP-4 CONTROL PANEL 120VAC POWER LADDER
EI644	IOP-4 CONTROL PANEL 24VDC POWER LADDER
EI645	IOP-4 CONTROL PANEL RACK 6 SLOTS 0 & 1 WIRING
EI646	IOP-4 CONTROL PANEL RACK 6 SLOTS 2 & 3 WIRING
EI647	IOP-4 CONTROL PANEL RACK 6 SLOTS 4 & 5 WIRING
EI648	IOP-4 CONTROL PANEL RACK 6 SLOTS 6 & 7 WIRING
EI649	NOT USED
TN601	CONTROL SYSTEM ARCHITECTURE

THIS DRAWING PRODUCED ON AUTOCAD
DO NOT REVISE MANUALLY

"THIS DOCUMENT IS THE PROPERTY OF NAVAL FACILITIES ENGINEERING COMMAND, PREPARED BY TETRA TECH ENGINEERING CORPORATION PC, AND IS PROVIDED UPON THE CONDITION THAT IT WILL NOT BE REPRODUCED, COPIED, OR ISSUED TO A THIRD PARTY, AND WILL BE USED SOLELY FOR THE ORIGINAL INTENDED PURPOSE AND SOLELY FOR THE EXECUTION OR REVIEW OF THE ENGINEERING CONSTRUCTION OF THE PROJECT".

IT IS A VIOLATION OF THE NEW YORK STATE EDUCATION LAW, ARTICLE 145, FOR ANY PERSON, UNLESS UNDER THE DIRECTION OF A NEW YORK STATE LICENSED PROFESSIONAL ENGINEER, TO ALTER AN ITEM ON THIS DOCUMENT IN ANY WAY.

ISSUED FOR BID - FEBRUARY 2026

NAVFAC

STATE OF NEW YORK
JOHN DAVID BRADY
080336
4/24/26
LICENSED PROFESSIONAL ENGINEER

TETRA TECH
www.tetratech.com
4633 CORPORATION LANE, SUITE 300
VIRGINIA BEACH, VA 23462
PHONE: (757) 461-3768 FAX: (757) 461-4148
A/E INFO

APPROVED
FOR COMMANDER NAVFAC
ACTIVITY
As per document from Nicole Cowand, NAVFAC MIDLANT PLL/EV3.
SATISFACTORY TO DATE 04/24/2026
DES JJK DRW JJK CHK WS
PM/CM
BRANCH MANAGER
CHIEF ENG/ARCH
FIRE PROTECTION

NAVAL FACILITIES ENGINEERING SYSTEMS COMMAND - MID - ATLANTIC
RWDS
NAVAL WEAPONS INDUSTRIAL RESERVE PLANT BETHPAGE, NEW YORK
NAVAL INDUSTRIAL RESERVE ORDNANCE PLANT
PHASE III - TREATMENT PLANT
IOP-4 CONTROL PANEL RACK 6 SLOTS 4 & 5

SCALE: AS NOTED
EPROJECT NO.: -
CONSTR. CONTR. NO.
NAVFAC DRAWING NO. ##
SHEET OF -
EI647

FILE NAME: Y:\03-Projects\Federal\NAVFAC\112008005_WC24_PHASE III GWTP_2023\3. Working Files\Drawings\A&C\EI643 - EI648.dwg LAYOUT NAME: EI647 PLOTTED: Tuesday, April 21, 2026 - 8:07am USER: Bill.Stanebroker

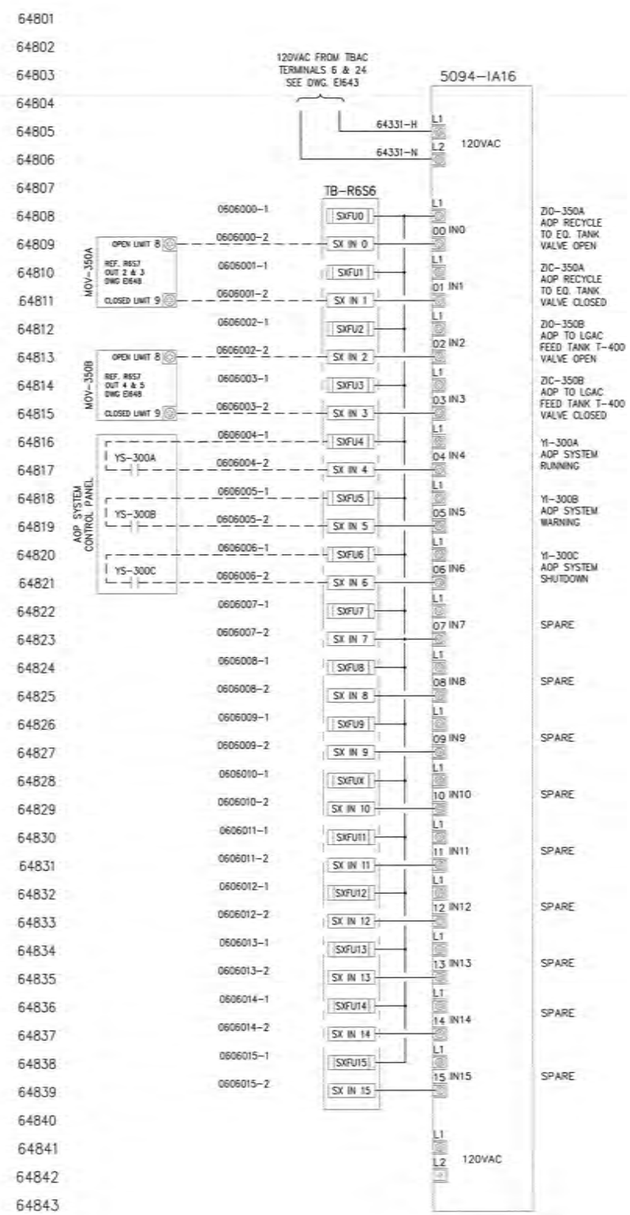

A-B PT# 5094-IA16
DISCRETE INPUT (120VAC)
RACK 6 SLOT 6

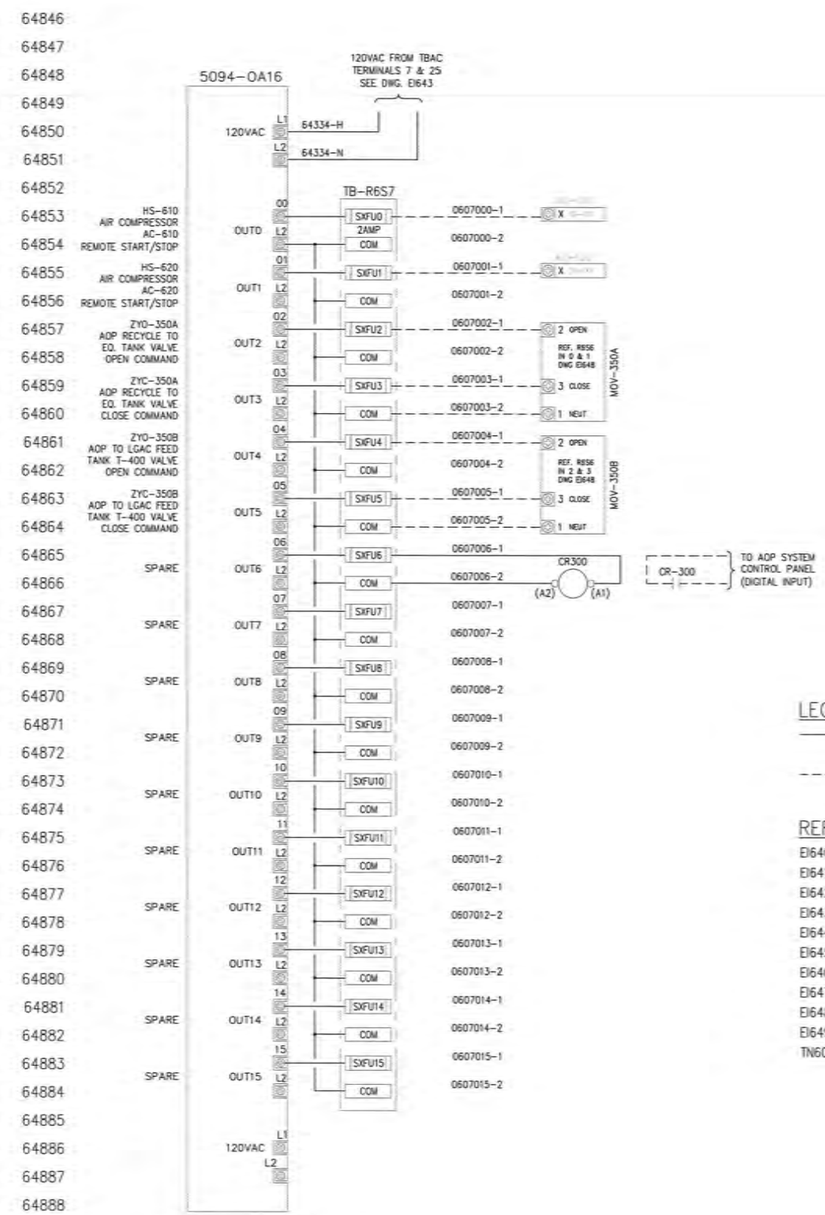

A-B PT# 5094-OA16
DISCRETE OUTPUT (120VAC)
RACK 6, SLOT 7

LEGEND:

——— INTERNAL PANEL WIRING (BY PANEL FABRICATOR)

– – – – – – EXTERNAL PANEL WIRING (BY ELECTRICAL CONTRACTOR)

REFERENCE DRAWINGS:

EI640	IOP-4 LAYOUT PANEL & B.O.M
EI641	IOP-4 CONTROL SUB-PANEL LAYOUT & B.O.M
EI642	IOP-4 CONTROL PANEL TERMINAL DETAILS
EI643	IOP-4 CONTROL PANEL 120VAC POWER LADDER
EI644	IOP-4 CONTROL PANEL 24VDC POWER LADDER
EI645	IOP-4 CONTROL PANEL RACK 6 SLOTS 0 & 1 WIRING
EI646	IOP-4 CONTROL PANEL RACK 6 SLOTS 2 & 3 WIRING
EI647	IOP-4 CONTROL PANEL RACK 6 SLOTS 4 & 5 WIRING
EI648	IOP-4 CONTROL PANEL RACK 6 SLOTS 6 & 7 WIRING
EI649	NOT USED
TN601	CONTROL SYSTEM ARCHITECTURE

THIS DRAWING PRODUCED ON AUTOCAD
DO NOT REVISE MANUALLY

"THIS DOCUMENT IS THE PROPERTY OF NAVAL FACILITIES ENGINEERING COMMAND, PREPARED BY TETRA TECH ENGINEERING CORPORATION PC, AND IS PROVIDED UPON THE CONDITION THAT IT WILL NOT BE REPRODUCED, COPIED, OR ISSUED TO A THIRD PARTY, AND WILL BE USED SOLELY FOR THE ORIGINAL INTENDED PURPOSE AND SOLELY FOR THE EXECUTION OR REVIEW OF THE ENGINEERING CONSTRUCTION OF THE PROJECT".

IT IS A VIOLATION OF THE NEW YORK STATE EDUCATION LAW, ARTICLE 145, FOR ANY PERSON, UNLESS UNDER THE DIRECTION OF A NEW YORK STATE LICENSED PROFESSIONAL ENGINEER, TO ALTER AN ITEM ON THIS DOCUMENT IN ANY WAY.

ISSUED FOR BID - FEBRUARY 2026

NAVFAC

TETRA TECH
www.tetratech.com
4400 CORPORATION LANE, SUITE 300
VIRGINIA BEACH, VA 23462
PHONE: (757) 481-3768 FAX: (757) 481-4148
A/E INFO

APPROVED
FOR COMMANDER NAVFAC
ACTION
As per document from Nicole Cowend, NAVFAC MIDLANT PLL/LV3.
SATISFACTORY TO: DATE: 04/24/2026
DES JJK DRW JJK CHK WS
PM/DM:
BRANCH MANAGER:
CHIEF ENG/ARCH:
FIRE PROTECTION:

NAVAL FACILITIES ENGINEERING SYSTEMS COMMAND - MID - ATLANTIC
NAVAL INDUSTRIAL RESERVE ORDNANCE PLANT
NAVAL WEAPONS INDUSTRIAL RESERVE PLANT BETHPAGE, NEW YORK
PHASE III - TREATMENT PLANT
IOP-4 CONTROL PANEL RACK 6 SLOTS 6 & 7
REV09

SCALE: AS NOTED
(PROJECT NO.:
CONTR. CONTR. NO.
NAVFAC DRAWING NO. ##
SHEET OF
EI648

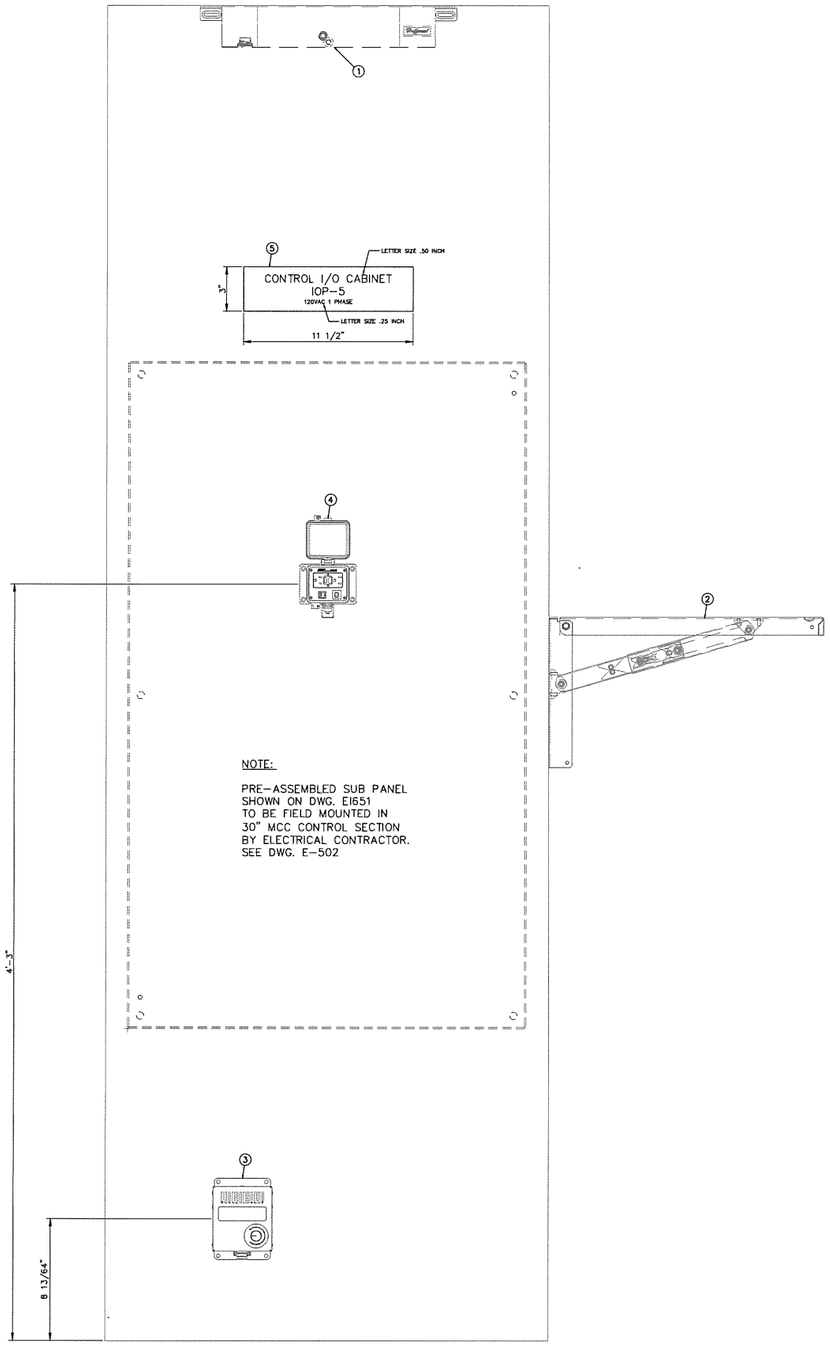

IOP-5
RW-9 MCC DOOR
SCALE: 3" = 1'-0"

PANEL BILL OF MATERIAL

ITEM	QUAN	DESCRIPTION	SUPPLIER
1	1	ENCLOSURE FLUORESCENT LIGHT 120VAC HOFFMAN CAT. NO. LF120V15 (OR EQUAL) POWER CORD WITH LEADS, HOFFMAN CAT. NO. LP72 (OR EQUAL) DOOR SWITCH (1) HOFFMAN CAT. NO. PLFSWD (OR EQUAL)	PANEL SHOP
2	1	12" x 18" FOLDING SHELF (WHITE) HOFFMAN CAT. No. AASHF1218 (OR EQUAL)	PANEL SHOP
3	1	100 WATT ENCLOSURE HEATER 120VAC HOFFMAN CAT. No. DAH1001A (OR EQUAL)	PANEL SHOP
4	1	PANEL INTERFACE CONNECTOR GRACE PORT CAT. NO. P-R2-K3RF3 (OR EQUAL)	PANEL SHOP
5	AS REQ'D.	PHENOLIC NAMEPLATE 3"H x 11 1/2"W WHITE W/BLACK 1/2" HIGH LETTERS, & 1/4" HIGH LETTERS SEE NAMEPLATE SCHEDULE	PANEL SHOP

NOTE: ITEMS LISTED IN THIS BILL OF MATERIAL TO BE FIELD INSTALLED BY ELECTRICAL CONTRACTOR.

REFERENCE DRAWINGS:

EI650 IOP-5 LAYOUT PANEL & B.O.M
EI651 IOP-5 CONTROL SUB-PANEL LAYOUT & B.O.M
EI652 IOP-5 CONTROL PANEL TERMINAL DETAILS
EI653 IOP-5 CONTROL PANEL 120VAC POWER LADDER
EI654 IOP-5 CONTROL PANEL 24VDC POWER LADDER
EI655 IOP-5 CONTROL PANEL RACK 7 SLOTS 0 & 1 WRING
EI656 NOT USED
EI657 NOT USED
EI658 NOT USED
EI659 NOT USED
TN601 CONTROL SYSTEM ARCHITECTURE

THIS DRAWING PRODUCED ON AUTOCAD
DO NOT REVISE MANUALLY

"THIS DOCUMENT IS THE PROPERTY OF NAVAL FACILITIES ENGINEERING COMMAND, PREPARED BY TETRA TECH ENGINEERING CORPORATION PC, AND IS PROVIDED UPON THE CONDITION THAT IT WILL NOT BE REPRODUCED, COPIED, OR ISSUED TO A THIRD PARTY, AND WILL BE USED SOLELY FOR THE ORIGINAL INTENDED PURPOSE AND SOLELY FOR THE EXECUTION OR REVIEW OF THE ENGINEERING CONSTRUCTION OF THE PROJECT".

IT IS A VIOLATION OF THE NEW YORK STATE EDUCATION LAW, ARTICLE 145, FOR ANY PERSON, UNLESS UNDER THE DIRECTION OF A NEW YORK STATE LICENSED PROFESSIONAL ENGINEER, TO ALTER AN ITEM ON THIS DOCUMENT IN ANY WAY.

ISSUED FOR BID - FEBRUARY 2026

NAVFAC

STATE OF NEW YORK
LICENSED PROFESSIONAL ENGINEER
080356
4/24/26

TETRA TECH
www.tetratech.com
4433 CORPORATION LANE, SUITE 300
VIRGINIA BEACH, VA 23462
PHONE: (757) 461-3768 FAX: (757) 461-4146

A/E W/O

APPROVED
FOR COMMANDER NAVFAC

ACTIVITY
As per document from Nicole Cowand, NAVFAC MIDLANT PLL/EV3.

SATISFACTORY TO DATE 04/24/2026

DES	DRW	CHK
JJK	JJK	WS

PM/DM
BRANCH MANAGER
CHIEF ENG/ARCH
FIRE PROTECTION

NAVAL FACILITIES ENGINEERING SYSTEMS COMMAND - MID - ATLANTIC
RW09
NAVAL INDUSTRIAL RESERVE ORDNANCE PLANT
NAVAL WEAPONS INDUSTRIAL RESERVE PLANT BETHPAGE, NEW YORK
PHASE III - TREATMENT PLANT
IOP-5 CONTROL PANEL LAYOUT & BILL OF MATERIAL

SCALE: AS NOTED
EPROJECT NO.:
CONSTR. CONTR. NO.
NAVFAC DRAWING NO. ##
SHEET OF
EI650

FILE NAME: Y:\03-Projects\Federal\NAVFAC\112GB605_WE24_PHASE III GWTP_2023\3. Working Files\Drawings\MCX\EI650 - EI652.dwg LAYOUT NAME: EI650 PLOTTED: Tuesday, April 21, 2026 - 8:10am USER: Bill.Stenebroker

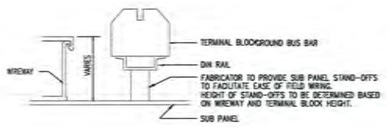

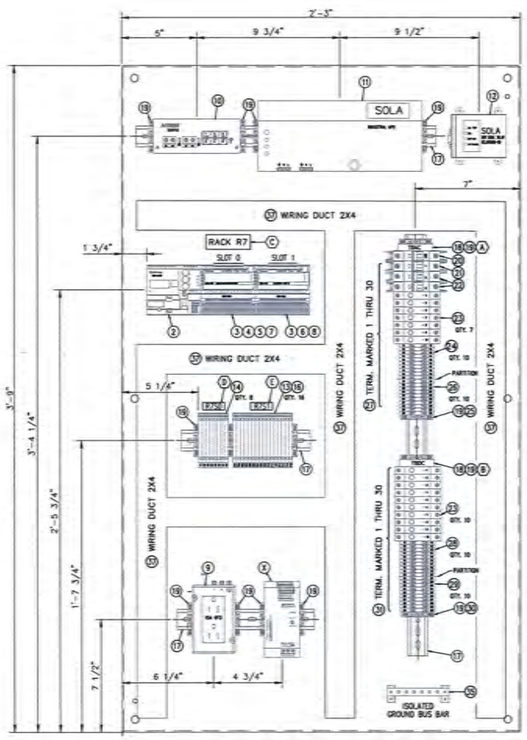

IOP-5
SUBPANEL ARRANGEMENT
SCALE: 3" = 1'-0"

NOTES:

1. ALL TERMINAL BLOCKS TO BE NUMBERED WITH PREPRINTED LABELS.
2. ALL WIRING TO HAVE IMPRINTED SHRINK TUBING ID LABELS.
3. PANEL SHOP TO INSTALL STAND-OFFS UNDER DIN RAIL TO BRING TERMINALS FLUSH WITH TOP OF WIRING DUCT.

REFERENCE DRAWINGS:

EI650	IOP-5 LAYOUT PANEL & B.O.M
EI651	IOP-5 CONTROL SUB-PANEL LAYOUT & B.O.M
EI652	IOP-5 CONTROL PANEL TERMINAL DETAILS
EI653	IOP-5 CONTROL PANEL 120VAC POWER LADDER
EI654	IOP-5 CONTROL PANEL 24VDC POWER LADDER
EI655	IOP-5 CONTROL PANEL RACK 7 SLOTS 0 & 1 WIRING
EI656	NOT USED
EI657	NOT USED
EI658	NOT USED
EI659	NOT USED
TN601	CONTROL SYSTEM ARCHITECTURE

NAMEPLATE SCHEDULE

ITEM	MK NO.	LINE 1	LINE 2
A	33	TBAC	
B	33	TBDC	
C	34	RACK R7	
D	32	R7S0	
E	32	R7S1	

SUB-PANEL BILL OF MATERIAL

ITEM	QUAN	DESCRIPTION	SUPPLIER
1	1	SUB-PANEL 45"H x 27"W, HOFFMAN CAT. NO. A48P30 (OR EQUAL)	PANEL SHOP
2	1	FLEX 5000 I/O, ETHERNET ADAPTER ALLEN BRADLEY CAT. NO. 5094-AENTR	PANEL SHOP
3	2	FLEX 5000 I/O, MOUNTING BASE ALLEN BRADLEY CAT. NO. 5094-MB	PANEL SHOP
4	1	FLEX 5000 I/O, SHIELD BAR ALLEN BRADLEY CAT. NO. 5094-STB	PANEL SHOP
5	1	FLEX 5000 I/O, TERMINAL BASE FOR 5094-IFBIH ALLEN BRADLEY CAT. NO. 5094-RTB3I	PANEL SHOP
6	1	FLEX 5000 I/O, REMOVABLE TERMINAL BASE FOR 5094-IB16, 5094-OB16, 5094-IA16, 5094-OA16 ALLEN BRADLEY CAT. NO. 5094-RTB3	PANEL SHOP
7	1	FLEX 5000 I/O, ANALOG 8 INPUT ISOLATED HART MODULE ALLEN BRADLEY CAT. NO. 5094-IFBIH	PANEL SHOP
8	1	FLEX 5000 I/O, 24VDC 16 DIGITAL INPUT ALLEN BRADLEY CAT. NO. 5094-OB16	PANEL SHOP
9	1	POWER SUPPLY QUINT PS/1AC/24DC/10A, DC OK ACTIVE PHEONIX CONTACT CAT. NO. 286673	PANEL SHOP
10	1	FIBER TO ETHERNET SWITCH 10 RJ-45 COPPER PORTS NTRON CAT. NO. 7014FX2	PANEL SHOP
11	1	SOLA INDUSTRIAL UPS 120VAC, 60HZ, 500VA, 300W, 4 MINUTE BACK UP TIME SOLA CAT. NO. SDU-500	PANEL SHOP
12	1	SOLA FORM C DRY CONTACT SOLA CAT. NO. RELAYCARD-SDU	PANEL SHOP
13	1	UT 4-L/HESID 24 W/ BLOWN FUSE INDICATOR, 5 X 20 mm FUSE HOLDER FOR 5094-IB16 & 5094-OB16 PHOENIX CONTACT CAT. NO. 3214366	PANEL SHOP
14	1	TRI LEVEL DISCONNECT TERMINAL BLOCK FOR 5094-IFBIH & 5094-OFB PHOENIX CONTACT CAT. NO. 3214325	PANEL SHOP
15	3	END BRACKET FOR NS 35 MOUNTING RAIL TYPE E/UK 1 (DOUBLE/TRIPPLE/LEVEL TERM) PHOENIX CONTACT CAT. NO. 201413	PANEL SHOP
16	16	FUSE 5x20mm RATING 1/2 AMP 5mm x 20mm BUSSMAN GMA	PANEL SHOP
17	AS REQ'D.	TS 35 x 7.5 mm SLOTTED STEEL DIN RAIL (ALUMINUM NOT ACCEPTED) ALLEN BRADLEY CAT. NO. 1492-EAHJ35	PANEL SHOP
18	2	GROUP MARKER ALLEN BRADLEY CAT. NO. 1492-GM35	PANEL SHOP
19	12	END ANCHOR ALLEN BRADLEY CAT. NO. 1492-ERL35	PANEL SHOP
20	1	20 AMP CIRCUIT BREAKER 1 POLE ALLEN BRADLEY CAT. NO. 1489-A1C200	PANEL SHOP
21	1	10 AMP CIRCUIT BREAKER 1 POLE ALLEN BRADLEY CAT. NO. 1489-A1C100 (OR EQUAL)	PANEL SHOP
22	2	5 AMP CIRCUIT BREAKER 1 POLE ALLEN BRADLEY CAT. NO. 1489-A1C050	PANEL SHOP
23	17	2 AMP CIRCUIT BREAKER 1 POLE ALLEN BRADLEY CAT. NO. 1492-GH020	PANEL SHOP
24	10	FEED THROUGH TERMINAL 600V ALLEN BRADLEY CAT. NO. 1492-J4BL	PANEL SHOP
25	1	PARTITION PLATE ALLEN BRADLEY CAT. NO. 1492-EBJ16	PANEL SHOP
26	10	GROUND BLOCK TERMINAL 600V ALLEN BRADLEY CAT. NO. 1492-JG6	PANEL SHOP
27	AS REQ'D.	MARKING SYSTEM (FOR 600V TERMINALS ALLEN BRADLEY CAT. NO. 1492-MR6X12	PANEL SHOP
28	10	FEED THROUGH TERMINAL 300V ALLEN BRADLEY CAT. NO. 1492-WM4	PANEL SHOP
29	10	GROUNDING TERMINAL 300V ALLEN BRADLEY CAT. NO. 1492-JG3	PANEL SHOP
30	1	PARTITION PLATE ALLEN BRADLEY CAT. NO. 1492-PPM3	PANEL SHOP
31	AS REQ'D.	MARKING SYSTEM (FOR 300V TERMINALS) ALLEN BRADLEY CAT. NO. 1492-MR6X9	PANEL SHOP
32	AS REQ'D.	PHENOLIC NAMEPLATE 1/2"H x 1 1/2"W WHITE W/BLACK 1/4" HIGH LETTERS, SEE NAMEPLATE SCHEDULE	PANEL SHOP
33	AS REQ'D.	PHENOLIC NAMEPLATE 3/4"H x 2"W WHITE W/BLACK 3/8" HIGH LETTERS, SEE NAMEPLATE SCHEDULE	PANEL SHOP
34	AS REQ'D.	PHENOLIC NAMEPLATE 1"H x 3"W WHITE W/BLACK 3/8" HIGH LETTERS, SEE NAMEPLATE SCHEDULE	PANEL SHOP
35	1	ISOLATED GROUND BAR SYSTEM, 200mm, HOFFMAN CAT NO. X-GS2K (OR EQUAL)	PANEL SHOP
36	1	RECEPTACLE 15A GFCI DIN RAIL MOUNTED WEIDMULLER CAT. NO. 6720005422	PANEL SHOP
37	AS REQ'D.	SLOTTED WIRE DUCT 2"W x 4"H / WITH COVER PANDUIT	PANEL SHOP

THIS DRAWING PRODUCED ON AUTOCAD
DO NOT REVISE MANUALLY

"THIS DOCUMENT IS THE PROPERTY OF NAVAL FACILITIES ENGINEERING COMMAND, PREPARED BY TETRA TECH ENGINEERING CORPORATION PC, AND IS PROVIDED UPON THE CONDITION THAT IT WILL NOT BE REPRODUCED, COPIED, OR ISSUED TO A THIRD PARTY, AND WILL BE USED SOLELY FOR THE ORIGINAL INTENDED PURPOSE AND SOLELY FOR THE EXECUTION OR REVIEW OF THE ENGINEERING CONSTRUCTION OF THE PROJECT".

IT IS A VIOLATION OF THE NEW YORK STATE EDUCATION LAW, ARTICLE 145, FOR ANY PERSON, UNLESS UNDER THE DIRECTION OF A NEW YORK STATE LICENSED PROFESSIONAL ENGINEER, TO ALTER AN ITEM ON THIS DOCUMENT IN ANY WAY.

ISSUED FOR BID - FEBRUARY 2026

NAVFAC

TETRA TECH
www.tetratech.com
4433 CORPORATION LANE, SUITE 300
VIRGINIA BEACH, VA 23462
PHONE: (757) 455-3258 FAX: (757) 455-4148
A/E INFO

APPROVED
FOR COMMANDER NAVFAC
ACTIVITY
As per document from Nicole Cowand, NAVFAC MIDLANT PILL/EV3.
SATISFACTORY TO DATE 04/24/2026

DES JJK | DRW JJK | CHK WS
PM/CM
BRANCH MANAGER
CHIEF ENG/ARCH
FIRE PROTECTION

NAVAL FACILITIES ENGINEERING SYSTEMS COMMAND - MID - ATLANTIC
NAVAL INDUSTRIAL RESERVE ORDNANCE PLANT
NAVAL WEAPONS INDUSTRIAL RESERVE PLANT BETHPAGE, NEW YORK
PHASE III - TREATMENT PLANT
IOP-5 SUB-PANEL LAYOUT & BILL OF MATERIAL

SCALE: AS NOTED
EPROJECT NO.:
CONSTR. CONTR. NO.:
NAVFAC DRAWING NO.
##
SHEET OF
EI651

FILE NAME: Y:\03-Projects\Federal\NAVFAC\112G8005_W024_PHASE III OMIP_2023\3. Working Files\Drawings\ARCU\EI650 - EI652.dwg LAYOUT NAME: EI651 PLOTTED: Tuesday, April 21, 2026 - 8:11am USER: Bill.Stonebraker

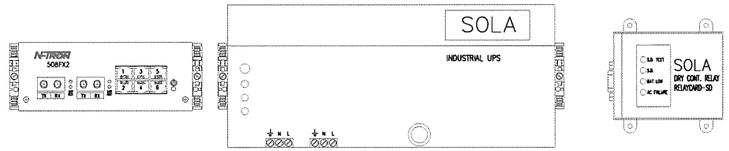

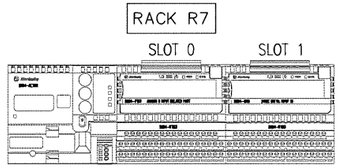

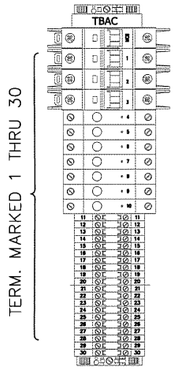

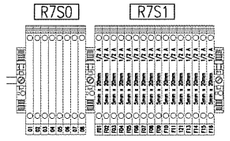

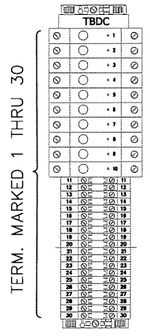

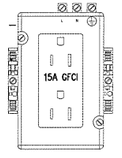

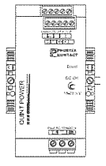

ISOLATED
GROUND BUS BAR

REFERENCE DRAWINGS:

EI650	IOP-5 LAYOUT PANEL & B.O.M
EI651	IOP-5 CONTROL SUB-PANEL LAYOUT & B.O.M
EI652	IOP-5 CONTROL PANEL TERMINAL DETAILS
EI653	IOP-5 CONTROL PANEL 120VAC POWER LADDER
EI654	IOP-5 CONTROL PANEL 24VDC POWER LADDER
EI655	IOP-5 CONTROL PANEL RACK 7 SLOTS 0 & 1 WIRING
EI656	NOT USED
EI657	NOT USED
EI658	NOT USED
EI659	NOT USED
TN601	CONTROL SYSTEM ARCHITECTURE

THIS DRAWING PRODUCED ON AUTOCAD
DO NOT REVISE MANUALLY

"THIS DOCUMENT IS THE PROPERTY OF NAVAL FACILITIES ENGINEERING COMMAND, PREPARED BY TETRA TECH ENGINEERING CORPORATION PC, AND IS PROVIDED UPON THE CONDITION THAT IT WILL NOT BE REPRODUCED, COPIED, OR ISSUED TO A THIRD PARTY, AND WILL BE USED SOLELY FOR THE ORIGINAL INTENDED PURPOSE AND SOLELY FOR THE EXECUTION OR REVIEW OF THE ENGINEERING CONSTRUCTION OF THE PROJECT".

IT IS A VIOLATION OF THE NEW YORK STATE EDUCATION LAW, ARTICLE 145, FOR ANY PERSON, UNLESS UNDER THE DIRECTION OF A NEW YORK STATE LICENSED PROFESSIONAL ENGINEER, TO ALTER AN ITEM ON THIS DOCUMENT IN ANY WAY.

ISSUED FOR BID - FEBRUARY 2026

NAVFAC

STATE OF NEW YORK
080336
LICENSED PROFESSIONAL ENGINEER

TETRA TECH
www.tetratech.com
4433 CORPORATION LANE, SUITE 300
VIRGINIA BEACH, VA 23462
PHONE: (757) 461-3766 FAX: (757) 461-4148

A/E INFO

APPROVED
FOR COMMANDER NAVFAC

ACTIVITY
As per document from Nicole Cowand, NAVFAC MIDLANT PLL/EV3.

SATISFACTORY TO DATE 04/24/2026

DES JJK	DRW JJK	CHK WS

PM/DM
BRANCH MANAGER
CHIEF ENG/ARCH
FIRE PROTECTION

NAVAL FACILITIES ENGINEERING SYSTEMS COMMAND - MID - ATLANTIC
NAVAL INDUSTRIAL RESERVE ORDNANCE PLANT
RW09
NAVAL WEAPONS INDUSTRIAL RESERVE PLANT BETHPAGE, NEW YORK
PHASE III - TREATMENT PLANT
IOP-5 CONTROL TERMINAL DETAILS

SCALE: AS NOTED
EPROJECT NO.:
CONSTR. CONTR. NO.
NAVFAC DRAWING NO. ##
SHEET OF

EI652

FILE NAME: Y:\03-Projects\Federal\NAVFAC\112068005_WE24_PHASE III GWTP_2023\3. Working Files\Drawings\A&C\EI650 - EI652.dwg LAYOUT NAME: EI652 PLOTTED: Tuesday, April 21, 2026 - 8:11am USER: Bill.Stonebroker

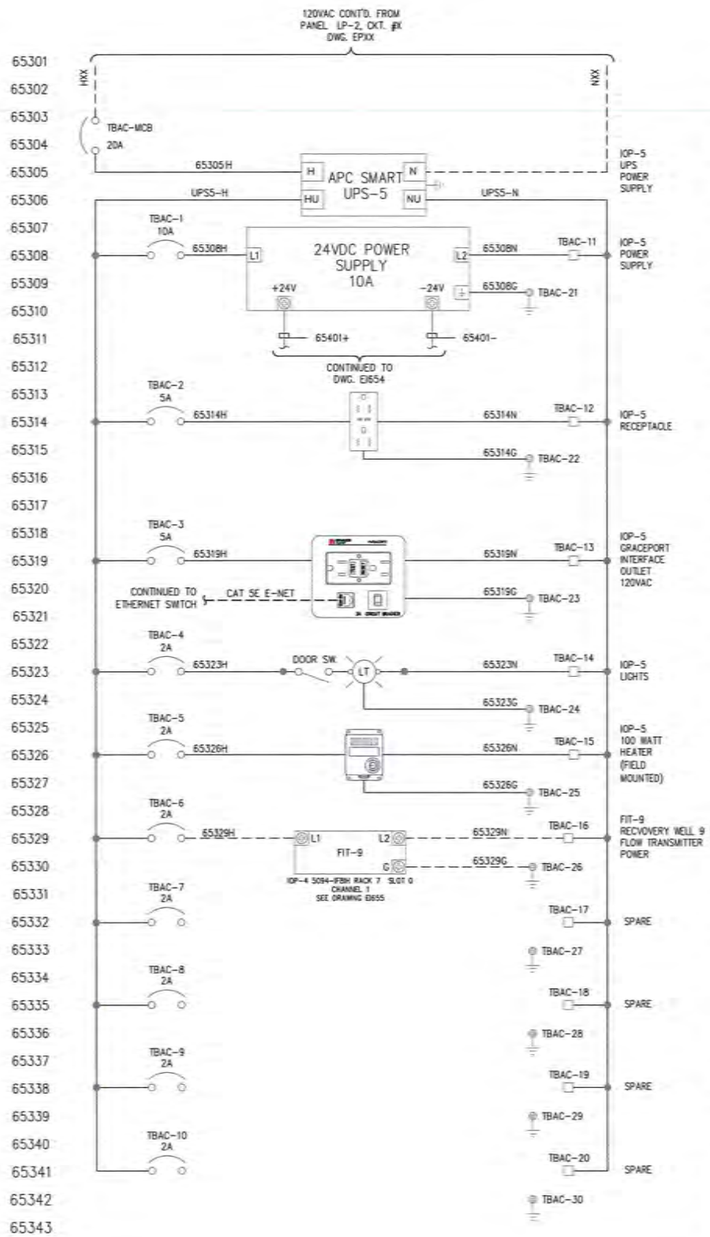

LEGEND:

——— INTERNAL PANEL WIRING (BY PANEL FABRICATOR)

– – – – – – EXTERNAL PANEL WIRING (BY ELECTRICAL CONTRACTOR)

REFERENCE DRAWINGS:

EI650	IOP-5 LAYOUT PANEL & B.O.M
EI651	IOP-5 CONTROL SUB-PANEL LAYOUT & B.O.M
EI652	IOP-5 CONTROL PANEL TERMINAL DETAILS
EI653	IOP-5 CONTROL PANEL 120VAC POWER LADDER
EI654	IOP-5 CONTROL PANEL 24VDC POWER LADDER
EI655	IOP-5 CONTROL PANEL RACK 7 SLOTS 0 & 1 WIRING
EI656	NOT USED
EI657	NOT USED
EI658	NOT USED
EI659	NOT USED
TN601	CONTROL SYSTEM ARCHITECTURE

THIS DRAWING PRODUCED ON AUTOCAD DO NOT REVISE MANUALLY

"THIS DOCUMENT IS THE PROPERTY OF NAVAL FACILITIES ENGINEERING COMMAND, PREPARED BY TETRA TECH ENGINEERING CORPORATION PC, AND IS PROVIDED UPON THE CONDITION THAT IT WILL NOT BE REPRODUCED, COPIED, OR ISSUED TO A THIRD PARTY, AND WILL BE USED SOLELY FOR THE ORIGINAL INTENDED PURPOSE AND SOLELY FOR THE EXECUTION OR REVIEW OF THE ENGINEERING CONSTRUCTION OF THE PROJECT".

IT IS A VIOLATION OF THE NEW YORK STATE EDUCATION LAW, ARTICLE 145, FOR ANY PERSON, UNLESS UNDER THE DIRECTION OF A NEW YORK STATE, LICENSED PROFESSIONAL ENGINEER, TO ALTER AN ITEM ON THIS DOCUMENT IN ANY WAY.

ISSUED FOR BID - FEBRUARY 2026

NAVFAC

STATE OF NEW YORK
LICENSED PROFESSIONAL ENGINEER
100035A
4/24/26

TETRA TECH
www.tetratech.com
4433 CORPORATION LANE, SUITE 200
VIRGINIA BEACH, VA 23462
PHONE: (757) 461-3700 FAX: (757) 461-4148
A/E INFO

APPROVED
FOR COMMANDER NAVFAC

ACTIVITY
As per document from Nicole Cowcez, NAVFAC MIDLANT PLL/EV3

SATISFACTORY TO DATE 04/24/2026

DES JJK | DRW JJK | CHK WS

PM/CM
BRANCH MANAGER
CHIEF ENG/ARCH
FIRE PROTECTION

NAVAL FACILITIES ENGINEERING SYSTEMS COMMAND - MID - ATLANTIC
NAVAL INDUSTRIAL RESERVE ORDNANCE PLANT
NAVAL WEAPONS INDUSTRIAL RESERVE PLANT BETHPAGE, NEW YORK
PHASE III - TREATMENT PLANT
IOP-5 CONTROL PANEL 120VAC POWER LADDER

RW09

SCALE: AS NOTED
CPROJECT NO.:
CONSTR. CONTR. NO.
NAVFAC DRAWING NO. ##
SHEET OF

EI653

FILE NAME: Y:\03-Projects\Federal\NAVFAC\120080005_WC24_PHASE III GWTP_2023\3. Working Files\Drawings\MCS\EI653 - EI655.dwg LAYOUT NAME: EI653 PLOTTED: Tuesday, April 21, 2026 - 8:12am USER: Bill.Stonebraker

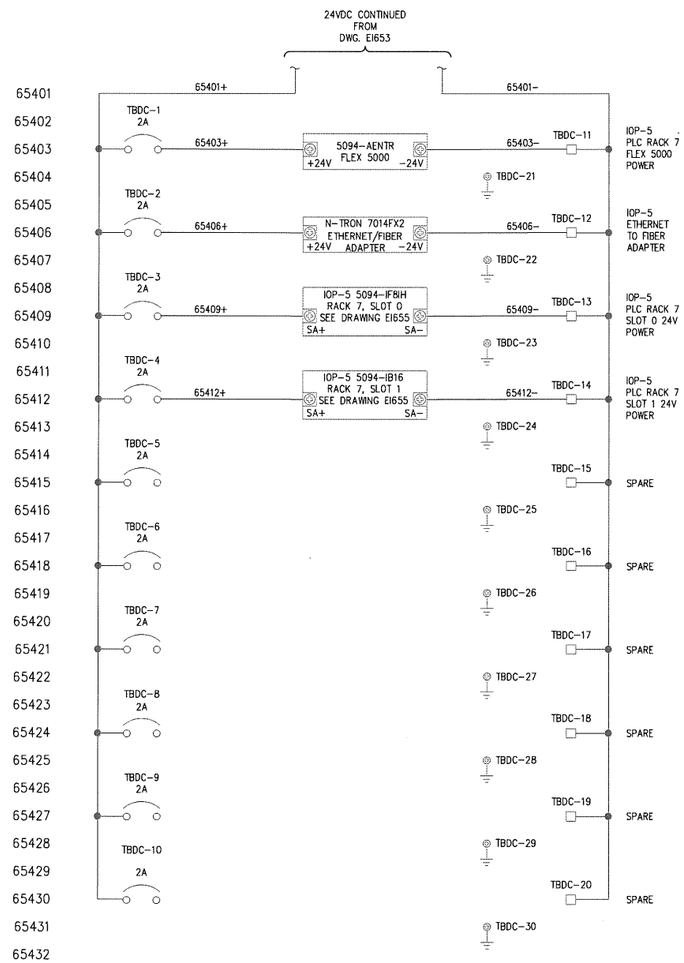

LEGEND:

——— INTERNAL PANEL WIRING (BY PANEL FABRICATOR)

- - - - - - EXTERNAL PANEL WIRING (BY ELECTRICAL CONTRACTOR)

REFERENCE DRAWINGS:

EI650	IOP-5 LAYOUT PANEL & B.O.M
EI651	IOP-5 CONTROL SUB-PANEL LAYOUT & B.O.M
EI652	IOP-5 CONTROL PANEL TERMINAL DETAILS
EI653	IOP-5 CONTROL PANEL 120VAC POWER LADDER
EI654	IOP-5 CONTROL PANEL 24VDC POWER LADDER
EI655	IOP-5 CONTROL PANEL RACK 7 SLOTS 0 & 1 WIRING
EI656	NOT USED
EI657	NOT USED
EI658	NOT USED
EI659	NOT USED
TN601	CONTROL SYSTEM ARCHITECTURE

THIS DRAWING PRODUCED ON AUTOCAD
DO NOT REVISE MANUALLY

"THIS DOCUMENT IS THE PROPERTY OF NAVAL FACILITIES ENGINEERING COMMAND, PREPARED BY TETRA TECH ENGINEERING CORPORATION PC, AND IS PROVIDED UPON THE CONDITION THAT IT WILL NOT BE REPRODUCED, COPIED, OR ISSUED TO A THIRD PARTY, AND WILL BE USED SOLELY FOR THE ORIGINAL INTENDED PURPOSE AND SOLELY FOR THE EXECUTION OR REVIEW OF THE ENGINEERING CONSTRUCTION OF THE PROJECT".

IT IS A VIOLATION OF THE NEW YORK STATE EDUCATION LAW, ARTICLE 145, FOR ANY PERSON, UNLESS UNDER THE DIRECTION OF A NEW YORK STATE LICENSED PROFESSIONAL ENGINEER, TO ALTER AN ITEM ON THIS DOCUMENT IN ANY WAY.

ISSUED FOR BID - FEBRUARY 2026

NAVFAC

STATE OF NEW YORK
LICENSED PROFESSIONAL ENGINEER
080236
4/24/26

TETRA TECH
www.tetratech.com
4433 CORPORATION LANE, SUITE 300
VIRGINIA BEACH, VA 23462
PHONE: (757) 461-3708 FAX: (757) 461-4148
A/E W/O

APPROVED
FOR COMMANDER NAVFAC

ACTIVITY
As per document from Nicole Cowand, NAVFAC MIDLANT PLI/EV3.

SATISFACTORY TO DATE 04/24/2026

DES	DRW	CHK
JJK	JJK	WS

PM/DM
BRANCH MANAGER
CHIEF ENG/ARCH
FIRE PROTECTION

NAVAL FACILITIES ENGINEERING SYSTEMS COMMAND - MID - ATLANTIC
NAVAL INDUSTRIAL RESERVE ORDNANCE PLANT
NAVAL WEAPONS INDUSTRIAL RESERVE PLANT BETHPAGE, NEW YORK
PHASE III - TREATMENT PLANT
IOP-5 CONTROL PANEL 24VDC POWER LADDER

RWO9

SCALE: AS NOTED
EPROJECT NO.: -
CONSTR. CONTR. NO.
NAVFAC DRAWING NO. ##
SHEET OF -
EI654

FILE NAME: Y:\03-Projects\Federal\NAVFAC\112028005_WE24_PHASE III OWTP_2023\3. Working Files\Drawings\MCO\EI653 - EI655.dwg LAYOUT NAME: EI654 PLOTTED: Tuesday, April 21, 2026 - 8:13am USER: Bill.Stanebraker

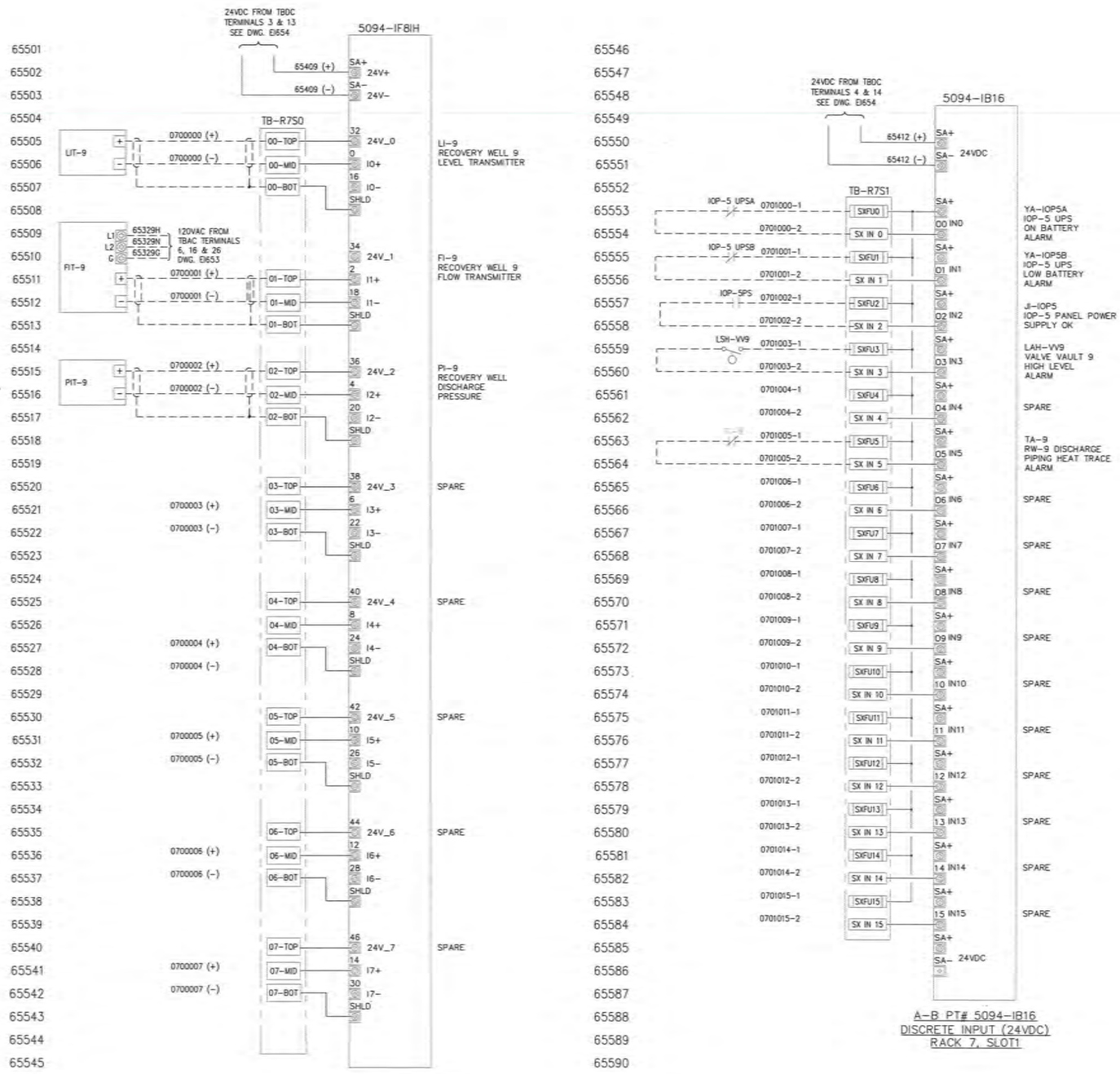

A-B PT# 5094-IF8IH
AI, 4-20mA, HART, 8CHN
RACK 7, SLOT 0

A-B PT# 5094-IB16
DISCRETE INPUT (24VDC)
RACK 7, SLOT1

LEGEND:

——— INTERNAL PANEL WIRING (BY PANEL FABRICATOR)

- - - - - - EXTERNAL PANEL WIRING (BY ELECTRICAL CONTRACTOR)

REFERENCE DRAWINGS:

EI650	IOP-5 LAYOUT PANEL & B.O.M
EI651	IOP-5 CONTROL SUB-PANEL LAYOUT & B.O.M
EI652	IOP-5 CONTROL PANEL TERMINAL DETAILS
EI653	IOP-5 CONTROL PANEL 120VAC POWER LADDER
EI654	IOP-5 CONTROL PANEL 24VDC POWER LADDER
EI656	NOT USED
EI657	NOT USED
EI658	NOT USED
EI659	NOT USED
TN601	CONTROL SYSTEM ARCHITECTURE

THIS DRAWING PRODUCED ON AUTOCAD
DO NOT REVISE MANUALLY

"THIS DOCUMENT IS THE PROPERTY OF NAVAL FACILITIES ENGINEERING COMMAND, PREPARED BY TETRA TECH ENGINEERING CORPORATION PC, AND IS PROVIDED UPON THE CONDITION THAT IT WILL NOT BE REPRODUCED, COPIED, OR ISSUED TO A THIRD PARTY, AND WILL BE USED SOLELY FOR THE ORIGINAL INTENDED PURPOSE AND SOLELY FOR THE EXECUTION OR REVIEW OF THE ENGINEERING CONSTRUCTION OF THE PROJECT".

IT IS A VIOLATION OF THE NEW YORK STATE EDUCATION LAW, ARTICLE 145, FOR ANY PERSON, UNLESS UNDER THE DIRECTION OF A NEW YORK STATE LICENSED PROFESSIONAL ENGINEER, TO ALTER AN ITEM ON THIS DOCUMENT IN ANY WAY.

ISSUED FOR BID - FEBRUARY 2026

NAVFAC

TETRA TECH
www.tetratech.com
4400 CORPORATION LANE, SUITE 300
VIRGINIA BEACH, VA 23462
PHONE: (757)-461-3768 FAX: (757)-461-4148
A/E INFO

APPROVED
FOR COMMANDER NAVFAC

ACTION
As per document from Nicole Cowand, NAVFAC MIDLANT PCL/EW3.

SATISFACTORY TO DATE 04/24/2026

DES	DRW	CHK
JJK	JJK	WS

PM/DM
BRANCH MANAGER
CHIEF ENG/ARCH
FIRE PROTECTION

NAVAL FACILITIES ENGINEERING SYSTEMS COMMAND - MID - ATLANTIC
NAVAL INDUSTRIAL RESERVE ORDNANCE PLANT
NAVAL WEAPONS INDUSTRIAL RESERVE PLANT BETHPAGE, NEW YORK
PHASE III - TREATMENT PLANT
IOP-5 CONTROL PANEL RACK 7 SLOTS 0 & 1

SCALE: AS NOTED
EPROJECT NO.: -
CONSTR. CONTR. NO.:
NAVFAC DRAWING NO. ##
SHEET OF -
EI655

FILE NAME: Y:\03-Projects\Federal\NAVFAC\112020005_WG24_PHASE III GWTP_2023\3. Working Files\Drawings\MDC\EI653 - EI655.dwg LAYOUT NAME: EI655 PLOTTED: Tuesday, April 21, 2026 - 8:13am USER: Bill.Stonebraker

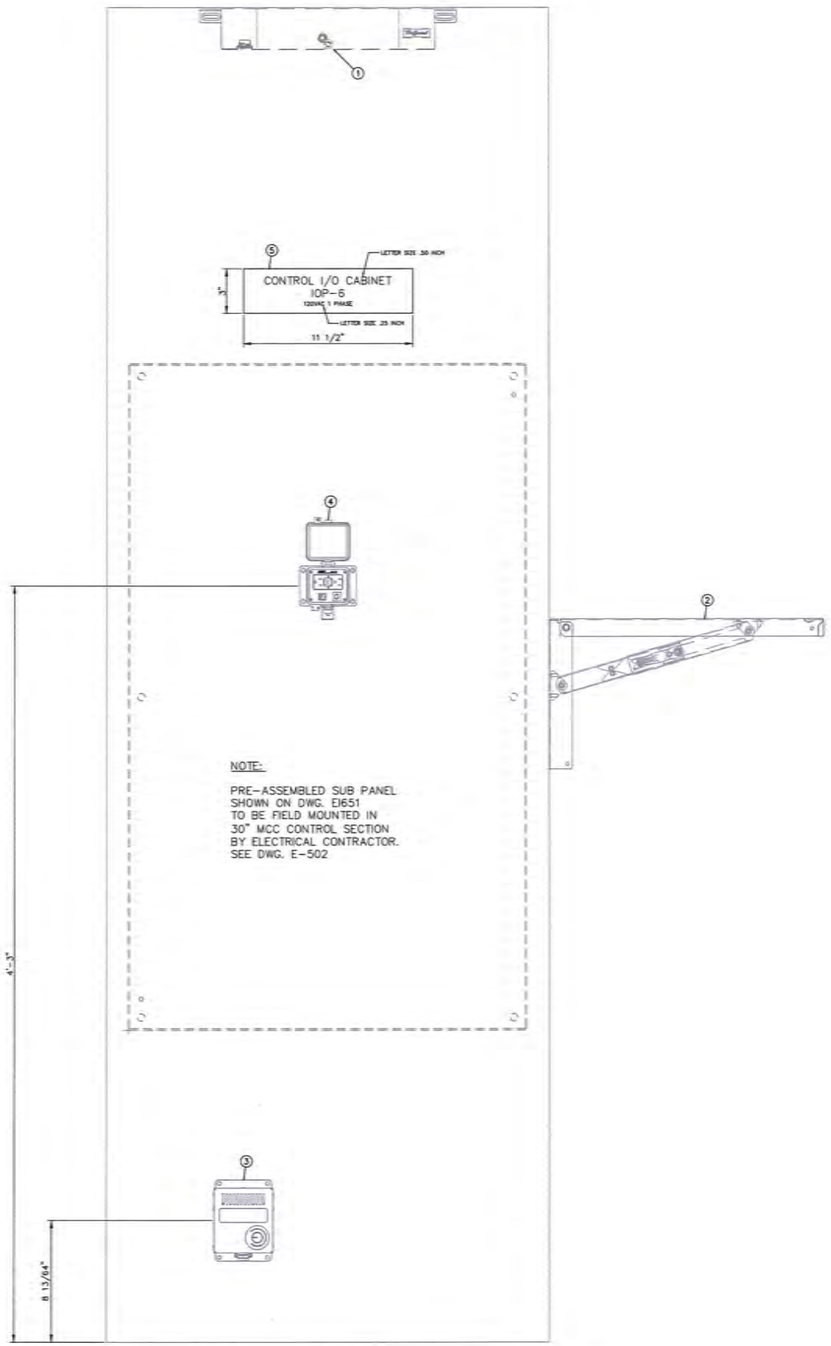

IOP-6
RW-10A MCC DOOR
SCALE: 3" = 1'-0"

PANEL BILL OF MATERIAL

ITEM	QUAN	DESCRIPTION	SUPPLIER
1	1	ENCLOSURE FLUORESCENT LIGHT 120VAC HOFFMAN CAT. NO. LF120V15 (OR EQUAL) POWER CORD WITH LEADS, HOFFMAN CAT. NO. LP72 (OR EQUAL) DOOR SWITCH (1) HOFFMAN CAT. NO. PLFSWD (OR EQUAL)	PANEL SHOP
2	1	12" x 18" FOLDING SHELF (WHITE) HOFFMAN CAT. No. AASHF1218 (OR EQUAL)	PANEL SHOP
3	1	100 WATT ENCLOSURE HEATER 120VAC HOFFMAN CAT. No. DAH1001A (OR EQUAL)	PANEL SHOP
4	1	PANEL INTERFACE CONNECTOR GRACE PORT CAT. NO. P-R2-K3RF3 (OR EQUAL)	PANEL SHOP
5	AS REQ'D.	PHENOLIC NAMEPLATE 3"H x 11 1/2"W WHITE W/BLACK 1/2" HIGH LETTERS, & 1/4" HIGH LETTERS SEE NAMEPLATE SCHEDULE	PANEL SHOP

NOTE: ITEMS LISTED IN THIS BILL OF MATERIAL TO BE FIELD INSTALLED BY ELECTRICAL CONTRACTOR.

REFERENCE DRAWINGS:

EI660 IOP-6 LAYOUT PANEL & B.O.M
EI661 IOP-6 CONTROL SUB-PANEL LAYOUT & B.O.M
EI662 IOP-6 CONTROL PANEL TERMINAL DETAILS
EI663 IOP-6 CONTROL PANEL 120VAC POWER LADDER
EI664 IOP-6 CONTROL PANEL 24VDC POWER LADDER
EI665 IOP-6 CONTROL PANEL RACK 8 SLOTS 0 & 1 WIRING
EI666 NOT USED
EI667 NOT USED
EI668 NOT USED
EI669 NOT USED
TN601 CONTROL SYSTEM ARCHITECTURE

THIS DRAWING PRODUCED ON AUTOCAD
DO NOT REVISE MANUALLY

"THIS DOCUMENT IS THE PROPERTY OF NAVAL FACILITIES ENGINEERING COMMAND, PREPARED BY TETRA TECH ENGINEERING CORPORATION PC, AND IS PROVIDED UPON THE CONDITION THAT IT WILL NOT BE REPRODUCED, COPIED, OR ISSUED TO A THIRD PARTY, AND WILL BE USED SOLELY FOR THE ORIGINAL INTENDED PURPOSE AND SOLELY FOR THE EXECUTION OR REVIEW OF THE ENGINEERING CONSTRUCTION OF THE PROJECT".

IT IS A VIOLATION OF THE NEW YORK STATE EDUCATION LAW, ARTICLE 145, FOR ANY PERSON, UNLESS UNDER THE DIRECTION OF A NEW YORK STATE LICENSED PROFESSIONAL ENGINEER, TO ALTER AN ITEM ON THIS DOCUMENT IN ANY WAY.

ISSUED FOR BID - FEBRUARY 2026

NAVFAC

STATE OF NEW YORK
COMPANY
4/24/26
090336
LICENSED PROFESSIONAL ENGINEER

TETRA TECH
www.tetratech.com
4430 CORPORATION LANE, SUITE 350
VIRGINIA BEACH, VA 23462
PHONE: (757)-451-3750 FAX: (757) 451-6148
A/E INFO

APPROVED
FOR COMMANDER NAVFAC
ACTIVITY
As per document from Nicole Cowand, NAVFAC MIDLANT PLL/EV3.
SATISFACTORY TO DATE 04/24/2026
DES JJK DRW JJK CHK WS
PM/DM
BRANCH MANAGER
CHIEF ENG/ARCH
FIRE PROTECTION

NAVAL FACILITIES ENGINEERING SYSTEMS COMMAND - MID - ATLANTIC
DWG NAVAL INDUSTRIAL RESERVE PLANT BETHPAGE, NEW YORK
NAVAL WEAPONS INDUSTRIAL RESERVE ORDNANCE PLANT
PHASE III - TREATMENT PLANT
IOP-6 CONTROL PANEL LAYOUT & BILL OF MATERIAL

SCALE: AS NOTED
EPROJECT NO.: -
CONSTR. CONTR. NO.
NAVFAC DRAWING NO. ##
SHEET OF -
EI660

FILE NAME: T:\03-Projects\Federal\NAVFAC\120080005_WE24_PHASE III GWTP_2023\3. Working Files\Drawings\AACS\EI660 - EI663.dwg LAYOUT NAME: EI660 PLOTTED: Tuesday, April 21, 2026 - 8:15am USER: Bill.Stanebroker

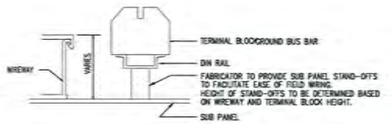

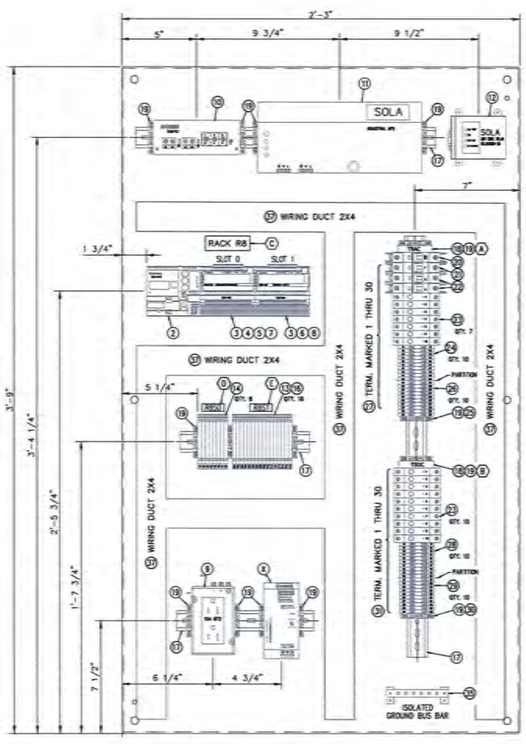

IOP-6
SUBPANEL ARRANGEMENT
SCALE: 3" = 1'-0"

NOTES:

1. ALL TERMINAL BLOCKS TO BE NUMBERED WITH PREPRINTED LABELS.
2. ALL WIRING TO HAVE IMPRINTED SHRINK TUBING ID LABELS.
3. PANEL SHOP TO INSTALL STAND-OFFS UNDER DIN RAIL TO BRING TERMINALS FLUSH WITH TOP OF WIRING DUCT.

REFERENCE DRAWINGS:

EI660 IOP-6 LAYOUT PANEL & B.O.M
EI661 IOP-6 CONTROL SUB-PANEL LAYOUT & B.O.M
EI662 IOP-6 CONTROL PANEL TERMINAL DETAILS
EI663 IOP-6 CONTROL PANEL 120VAC POWER LADDER
EI664 IOP-6 CONTROL PANEL 24VDC POWER LADDER
EI665 IOP-6 CONTROL PANEL RACK 8 SLOTS 0 & 1 WIRING
EI666 NOT USED
EI667 NOT USED
EI668 NOT USED
EI669 NOT USED
TN501 CONTROL SYSTEM ARCHITECTURE

NAMEPLATE SCHEDULE

ITEM	MK NO.	LINE 1	LINE 2
A	33	TBAC	
B	33	TBDC	
C	34	RACK R8	
D	32	R8S0	
E	32	R8S1	

SUB-PANEL BILL OF MATERIAL

ITEM	QUAN	DESCRIPTION	SUPPLIER
1	1	SUB-PANEL 45"H x 27"W, HOFFMAN CAT. NO. A48P30 (OR EQUAL)	PANEL SHOP
2	1	FLEX 5000 I/O, ETHERNET ADAPTER ALLEN BRADLEY CAT. NO. 5094-AENTR	PANEL SHOP
3	2	FLEX 5000 I/O, MOUNTING BASE ALLEN BRADLEY CAT. NO. 5094-MB	PANEL SHOP
4	1	FLEX 5000 I/O, SHIELD BAR ALLEN BRADLEY CAT. NO. 5094-STB	PANEL SHOP
5	1	FLEX 5000 I/O, TERMINAL BASE FOR 5094-IF8IH ALLEN BRADLEY CAT. NO. 5094-RTB3I	PANEL SHOP
6	1	FLEX 5000 I/O, REMOVABLE TERMINAL BASE FOR 5094-IB16, 5094-OB16, 5094-IA16, 5094-OA16 ALLEN BRADLEY CAT. NO. 5094-RTB3	PANEL SHOP
7	1	FLEX 5000 I/O, ANALOG 8 INPUT ISOLATED HART MODULE ALLEN BRADLEY CAT. NO. 5094-IF8IH	PANEL SHOP
8	1	FLEX 5000 I/O, 24VDC 16 DIGITAL INPUT ALLEN BRADLEY CAT. NO. 5094-OB16	PANEL SHOP
9	1	POWER SUPPLY QUINT PS/1AC/24DC/10A, DC OK ACTIVE PHEONIX CONTACT CAT. NO. 286673	PANEL SHOP
10	1	FIBER TO ETHERNET SWITCH 10 RJ-45 COPPER PORTS NTRON CAT. NO. 7014FX2	PANEL SHOP
11	1	SOLA INDUSTRIAL UPS 120VAC, 60HZ, 500VA, 300W, 4 MINUTE BACK UP TIME SOLA CAT. NO. SDU-500	PANEL SHOP
12	1	SOLA FORM C DRY CONTACT SOLA CAT. NO. RELAYCARD-SDU	PANEL SHOP
13	1	UT 4-L/HESID 24 W/ BLOWN FUSE INDICATOR, 5 X 20 mm FUSE HOLDER FOR 5094-IB16 & 5094-OB16 PHOENIX CONTACT CAT. NO. 3214366	PANEL SHOP
14	1	TRI LEVEL DISCONNECT TERMINAL BLOCK FOR 5094-IF8IH & 5094-OF8 PHOENIX CONTACT CAT. NO. 3214325	PANEL SHOP
15	3	END BRACKET FOR NS 35 MOUNTING RAIL TYPE E/UK 1 (DOUBLE/TRIPPLE/LEVEL TERM) PHOENIX CONTACT CAT. NO. 201413	PANEL SHOP
16	16	FUSE 5x20mm RATING 1/2 AMP 5mm x 20mm BUSSMAN GMA	PANEL SHOP
17	AS REQ'D.	TS 35 x 7.5 mm SLOTTED STEEL DIN RAIL (ALUMINUM NOT ACCEPTED) ALLEN BRADLEY CAT. NO. 1492-EAHJ35	PANEL SHOP
18	2	GROUP MARKER ALLEN BRADLEY CAT. NO. 1492-GM35	PANEL SHOP
19	12	END ANCHOR ALLEN BRADLEY CAT. NO. 1492-ERL35	PANEL SHOP
20	1	20 AMP CIRCUIT BREAKER 1 POLE ALLEN BRADLEY CAT. NO. 1489-A1C200	PANEL SHOP
21	1	10 AMP CIRCUIT BREAKER 1 POLE ALLEN BRADLEY CAT. NO. 1489-A1C100 (OR EQUAL)	PANEL SHOP
22	2	5 AMP CIRCUIT BREAKER 1 POLE ALLEN BRADLEY CAT. NO. 1489-A1C050	PANEL SHOP
23	17	2 AMP CIRCUIT BREAKER 1 POLE ALLEN BRADLEY CAT. NO. 1492-GH020	PANEL SHOP
24	10	FEED THROUGH TERMINAL 600V ALLEN BRADLEY CAT. NO. 1492-J4BL	PANEL SHOP
25	1	PARTITION PLATE ALLEN BRADLEY CAT. NO. 1492-EBJ16	PANEL SHOP
26	10	GROUND BLOCK TERMINAL 600V ALLEN BRADLEY CAT. NO. 1492-JG6	PANEL SHOP
27	AS REQ'D.	MARKING SYSTEM (FOR 600V TERMINALS ALLEN BRADLEY CAT. NO. 1492-MR6X12	PANEL SHOP
28	10	FEED THROUGH TERMINAL 300V ALLEN BRADLEY CAT. NO. 1492-WM4	PANEL SHOP
29	10	GROUNDING TERMINAL 300V ALLEN BRADLEY CAT. NO. 1492-JG3	PANEL SHOP
30	1	PARTITION PLATE ALLEN BRADLEY CAT. NO. 1492-PPM3	PANEL SHOP
31	AS REQ'D.	MARKING SYSTEM (FOR 300V TERMINALS) ALLEN BRADLEY CAT. NO. 1492-MR6X9	PANEL SHOP
32	AS REQ'D.	PHENOLIC NAMEPLATE 1/2"H x 1 1/2"W WHITE W/BLACK 1/4" HIGH LETTERS, SEE NAMEPLATE SCHEDULE	PANEL SHOP
33	AS REQ'D.	PHENOLIC NAMEPLATE 3/4"H x 2"W WHITE W/BLACK 3/8" HIGH LETTERS, SEE NAMEPLATE SCHEDULE	PANEL SHOP
34	AS REQ'D.	PHENOLIC NAMEPLATE 1"H x 3"W WHITE W/BLACK 3/8" HIGH LETTERS, SEE NAMEPLATE SCHEDULE	PANEL SHOP
35	1	ISOLATED GROUND BAR SYSTEM, 200mm, HOFFMAN CAT NO. X-GS2K (OR EQUAL)	PANEL SHOP
36	1	RECEPTACLE 15A GFCI DIN RAIL MOUNTED WEIDMULLER CAT. NO. 6720005422	PANEL SHOP
37	AS REQ'D.	SLOTTED WIRE DUCT 2"W x 4"H / WITH COVER PANDUIT	PANEL SHOP

THIS DRAWING PRODUCED ON AUTOCAD
DO NOT REVISE MANUALLY

"THIS DOCUMENT IS THE PROPERTY OF NAVAL FACILITIES ENGINEERING COMMAND, PREPARED BY TETRA TECH ENGINEERING CORPORATION PC, AND IS PROVIDED UPON THE CONDITION THAT IT WILL NOT BE REPRODUCED, COPIED, OR ISSUED TO A THIRD PARTY, AND WILL BE USED SOLELY FOR THE ORIGINAL INTENDED PURPOSE AND SOLELY FOR THE EXECUTION OR REVIEW OF THE ENGINEERING CONSTRUCTION OF THE PROJECT".

IT IS A VIOLATION OF THE NEW YORK STATE EDUCATION LAW, ARTICLE 145, FOR ANY PERSON, UNLESS UNDER THE DIRECTION OF A NEW YORK STATE LICENSED PROFESSIONAL ENGINEER, TO ALTER AN ITEM ON THIS DOCUMENT IN ANY WAY.

ISSUED FOR BID - FEBRUARY 2026

NAVFAC

STATE OF NEW YORK
4/24/26

TETRA TECH
www.tetratech.com
4400 CORPORATION LANE, SUITE 350
VIRGINIA BEACH, VA 23462
PHONE: (757) 461-3388 FAX: (757) 461-4148
A/E INFO

APPROVED
FOR COMMANDER NAVFAC
ACTION
As per document from Nicole Cowand, NAVFAC MIDLANT PLL/ZV3.
SATISFACTORY TO SKE 04/24/2026
DES JJK DRW JJK CHK WS
PM/DM
BRANCH MANAGER
CHIEF ENG/ARCH
FIRE PROTECTION

NAVAL FACILITIES ENGINEERING SYSTEMS COMMAND - MID - ATLANTIC
NAVAL INDUSTRIAL RESERVE PLANT BETHPAGE, NEW YORK
NAVAL WEAPONS INDUSTRIAL RESERVE PLANT
PHASE III - TREATMENT PLANT
IOP-6 SUB-PANEL LAYOUT & BILL OF MATERIAL
RN09

SCALE: AS NOTED
PROJECT NO.:
CONSTR. CONTR. NO.
NAVFAC DRAWING NO.
##
SHEET OF
EI661

FILE NAME: Y:\03-Projects\Federal\NAVFAC\13020805_WC24_PHASE III GWTP_2023\3. Working Files\Drawings\MC\EI660 - EI662.dwg LAYOUT NAME: EI661 PLOTTED: Tuesday, April 21, 2026 - 8:16am USER: Bill.Stonebraker

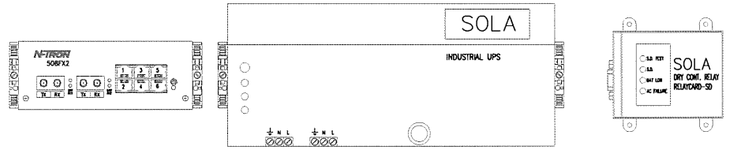

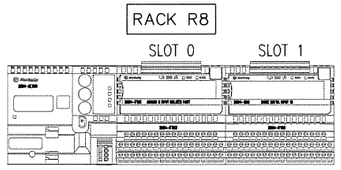

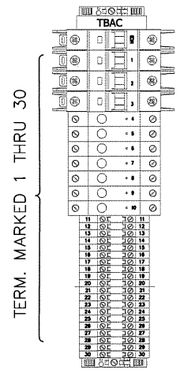

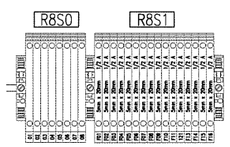

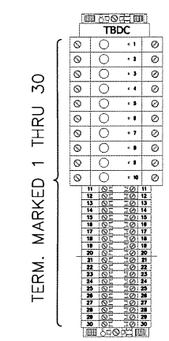

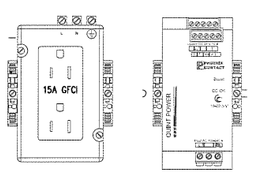

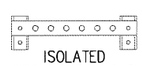

REFERENCE DRAWINGS:

EI660	IOP-6 LAYOUT PANEL & B.O.M
EI661	IOP-6 CONTROL SUB-PANEL LAYOUT & B.O.M
EI662	IOP-6 CONTROL PANEL TERMINAL DETAILS
EI663	IOP-6 CONTROL PANEL 120VAC POWER LADDER
EI664	IOP-6 CONTROL PANEL 24VDC POWER LADDER
EI665	IOP-6 CONTROL PANEL RACK 8 SLOTS 0 & 1 WIRING
EI666	NOT USED
EI667	NOT USED
EI668	NOT USED
EI669	NOT USED
TN601	CONTROL SYSTEM ARCHITECTURE

THIS DRAWING PRODUCED ON AUTOCAD
DO NOT REVISE MANUALLY

"THIS DOCUMENT IS THE PROPERTY OF NAVAL FACILITIES ENGINEERING COMMAND, PREPARED BY TETRA TECH ENGINEERING CORPORATION PC, AND IS PROVIDED UPON THE CONDITION THAT IT WILL NOT BE REPRODUCED, COPIED, OR ISSUED TO A THIRD PARTY, AND WILL BE USED SOLELY FOR THE ORIGINAL INTENDED PURPOSE AND SOLELY FOR THE EXECUTION OR REVIEW OF THE ENGINEERING CONSTRUCTION OF THE PROJECT".

IT IS A VIOLATION OF THE NEW YORK STATE EDUCATION LAW, ARTICLE 145, FOR ANY PERSON, UNLESS UNDER THE DIRECTION OF A NEW YORK STATE LICENSED PROFESSIONAL ENGINEER, TO ALTER AN ITEM ON THIS DOCUMENT IN ANY WAY.

ISSUED FOR BID - FEBRUARY 2026

NAVFAC

STATE OF NEW YORK · DANIEL E. BRADLEY · 080336 · LICENSED PROFESSIONAL ENGINEER · 4/24/26

TETRA TECH
www.tetratech.com
4433 CORPORATION LANE, SUITE 300
VIRGINIA BEACH, VA 23462
PHONE: (757) 461-3768 FAX: (757) 461-4148
A/E INFO

APPROVED
FOR COMMANDER NAVFAC

ACTIVITY
As per document from Nicole Cowand, NAVFAC MIDLANT PLL/EV3.

SATISFACTORY TO DATE 04/24/2026

DES	DRW	CHK
JJK	JJK	WS

PM/DM
BRANCH MANAGER
CHIEF ENG/ARCH
FIRE PROTECTION

NAVAL FACILITIES ENGINEERING SYSTEMS COMMAND - MID - ATLANTIC
RWDS
NAVAL INDUSTRIAL RESERVE ORDNANCE PLANT
NAVAL WEAPONS INDUSTRIAL RESERVE PLANT BETHPAGE, NEW YORK
PHASE III - TREATMENT PLANT
IOP-6 CONTROL TERMINAL DETAILS

SCALE: AS NOTED
EPROJECT NO.: -
CONSTR. CONTR. NO.
NAVFAC DRAWING NO. ##
SHEET OF -
EI662

FILE NAME: Y:\03-Projects\Federal\NAVFAC\112008005_WE24_PHASE III GWTP_2023\3. Working Files\Drawings\Mech\EI660 - EI662.dwg LAYOUT NAME: EI662 PLOTTED: Tuesday, April 21, 2026 - 8:16am USER: Bill.Stonebraker

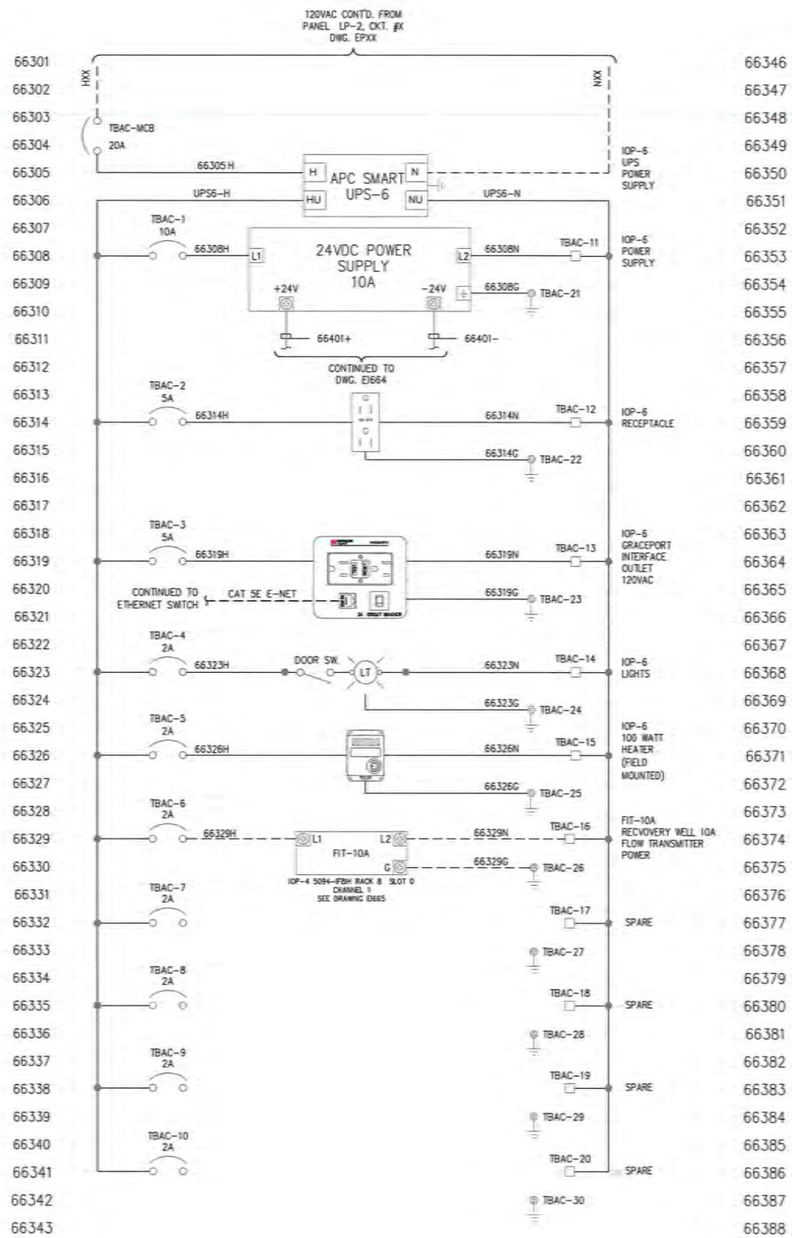

LEGEND:

——— INTERNAL PANEL WIRING (BY PANEL FABRICATOR)

- - - - - - EXTERNAL PANEL WIRING (BY ELECTRICAL CONTRACTOR)

REFERENCE DRAWINGS:

EI660	IOP-6 LAYOUT PANEL & B.O.M
EI661	IOP-6 CONTROL SUB-PANEL LAYOUT & B.O.M
EI662	IOP-6 CONTROL PANEL TERMINAL DETAILS
EI663	IOP-6 CONTROL PANEL 120VAC POWER LADDER
EI664	IOP-6 CONTROL PANEL 24VDC POWER LADDER
EI665	IOP-6 CONTROL PANEL RACK 8 SLOTS 0 & 1 WIRING
EI666	NOT USED
EI667	NOT USED
EI668	NOT USED
EI669	NOT USED
TN601	CONTROL SYSTEM ARCHITECTURE

THIS DRAWING PRODUCED ON AUTOCAD DO NOT REVISE MANUALLY

"THIS DOCUMENT IS THE PROPERTY OF NAVAL FACILITIES ENGINEERING COMMAND, PREPARED BY TETRA TECH ENGINEERING CORPORATION PC, AND IS PROVIDED UPON THE CONDITION THAT IT WILL NOT BE REPRODUCED, COPIED, OR ISSUED TO A THIRD PARTY, AND WILL BE USED SOLELY FOR THE ORIGINAL INTENDED PURPOSE AND SOLELY FOR THE EXECUTION OR REVIEW OF THE ENGINEERING CONSTRUCTION OF THE PROJECT".

IT IS A VIOLATION OF THE NEW YORK STATE EDUCATION LAW, ARTICLE 145, FOR ANY PERSON, UNLESS UNDER THE DIRECTION OF A NEW YORK STATE LICENSED PROFESSIONAL ENGINEER, TO ALTER AN ITEM ON THIS DOCUMENT IN ANY WAY.

ISSUED FOR BID - FEBRUARY 2026

NAVFAC

TETRA TECH
www.tetratech.com
4430 CORPORATION LANE, SUITE 300
VIRGINIA BEACH, VA 23462
PHONE: (757)-461-3708 FAX: (757) 461-4148
A/E INFO

APPROVED
FOR COMMANDER NAVFAC

ACTIVITY
As per document from Nicole Cowanc, NAVFAC MIDLANT PLL/SV3.

SATISFACTORY TO DATE 04/24/2026
DES JJK DRW JJK CHK WS
PM/DM
BRANCH MANAGER
CHIEF ENG/ARCH
FIRE PROTECTION

NAVAL FACILITIES ENGINEERING SYSTEMS COMMAND - MID - ATLANTIC
NAVAL INDUSTRIAL RESERVE ORDNANCE PLANT
NAVAL WEAPONS INDUSTRIAL RESERVE PLANT BETHPAGE, NEW YORK
PHASE III - TREATMENT PLANT
IOP-6 CONTROL PANEL 120VAC POWER LADDER

SCALE: AS NOTED
EPROJECT NO.:
CONSTR. CONTR. NO.
NAVFAC DRAWING NO. ##
SHEET OF
EI663

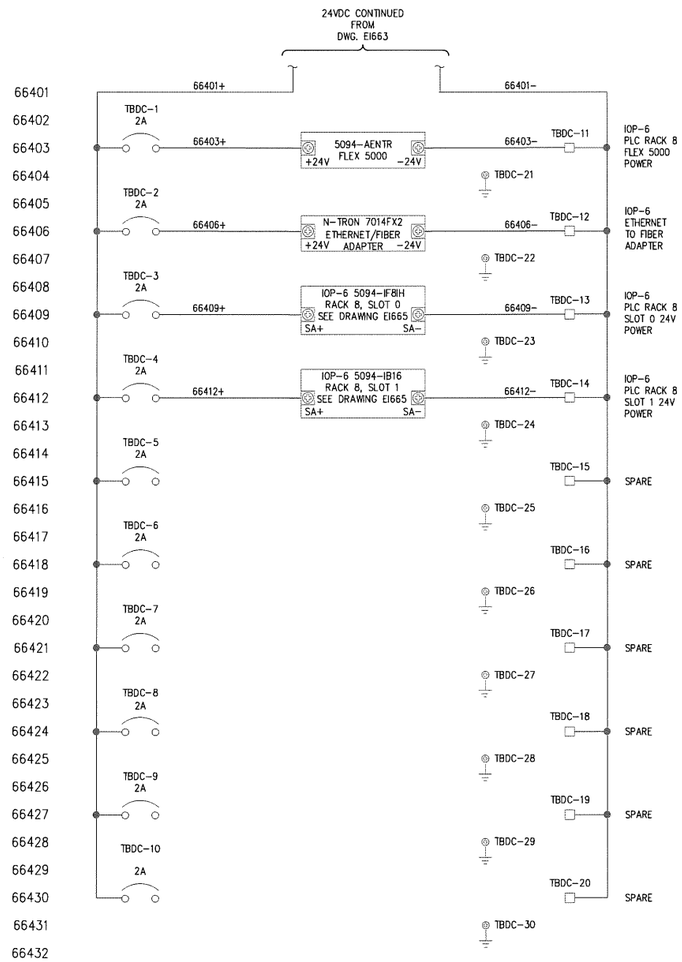

LEGEND:

———— INTERNAL PANEL WIRING (BY PANEL FABRICATOR)

- - - - - - EXTERNAL PANEL WIRING (BY ELECTRICAL CONTRACTOR)

REFERENCE DRAWINGS:

EI660	IOP-6 LAYOUT PANEL & B.O.M
EI661	IOP-6 CONTROL SUB-PANEL LAYOUT & B.O.M
EI662	IOP-6 CONTROL PANEL TERMINAL DETAILS
EI663	IOP-6 CONTROL PANEL 120VAC POWER LADDER
EI664	IOP-6 CONTROL PANEL 24VDC POWER LADDER
EI665	IOP-6 CONTROL PANEL RACK 8 SLOTS 0 & 1 WIRING
EI666	NOT USED
EI667	NOT USED
EI668	NOT USED
EI669	NOT USED
TN601	CONTROL SYSTEM ARCHITECTURE

THIS DRAWING PRODUCED ON AUTOCAD
DO NOT REVISE MANUALLY

"THIS DOCUMENT IS THE PROPERTY OF NAVAL FACILITIES ENGINEERING COMMAND, PREPARED BY TETRA TECH ENGINEERING CORPORATION PC, AND IS PROVIDED UPON THE CONDITION THAT IT WILL NOT BE REPRODUCED, COPIED, OR ISSUED TO A THIRD PARTY, AND WILL BE USED SOLELY FOR THE ORIGINAL INTENDED PURPOSE AND SOLELY FOR THE EXECUTION OR REVIEW OF THE ENGINEERING CONSTRUCTION OF THE PROJECT".

IT IS A VIOLATION OF THE NEW YORK STATE EDUCATION LAW, ARTICLE 145, FOR ANY PERSON, UNLESS UNDER THE DIRECTION OF A NEW YORK STATE LICENSED PROFESSIONAL ENGINEER, TO ALTER AN ITEM ON THIS DOCUMENT IN ANY WAY.

ISSUED FOR BID - FEBRUARY 2026

NAVFAC

STATE OF NEW YORK
LICENSED PROFESSIONAL ENGINEER
080356
4/24/26

TETRA TECH
www.tetratech.com
4433 CORPORATION LANE, SUITE 300
VIRGINIA BEACH, VA 23462
PHONE: (757) 461-3766 FAX: (757) 461-4148
A/E INFO

APPROVED
FOR COMMANDER NAVFAC

ACTIVITY
As per document from Nicole Cowana, NAVFAC MIDLANT PLL/EV3.

SATISFACTORY TO DATE 04/24/2026

DES	DRW	CHK
JJK	JJK	WS

PM/DM
BRANCH MANAGER
CHIEF ENG/ARCH
FIRE PROTECTION

NAVAL FACILITIES ENGINEERING SYSTEMS COMMAND - MID-ATLANTIC
NAVAL INDUSTRIAL RESERVE ORDNANCE PLANT
RW09
NAVAL WEAPONS INDUSTRIAL RESERVE PLANT BETHPAGE, NEW YORK
PHASE III - TREATMENT PLANT
IOP-6 CONTROL PANEL 24VDC POWER LADDER

SCALE: AS NOTED
EPROJECT NO.:
CONSTR. CONTR. NO.
NAVFAC DRAWING NO. ##
SHEET OF

EI664

UNCLASSIFIED

FILE NAME: Y:\03-Projects\Federal\NAVFAC\112008005_WE24_PHASE III GWTP_2023\3. Working Files\Drawings\Act\EI663 - EI665.dwg LAYOUT NAME: EI664 PLOTTED: Tuesday, April 21, 2026 - 8:18am USER: Bill.Stanebraker

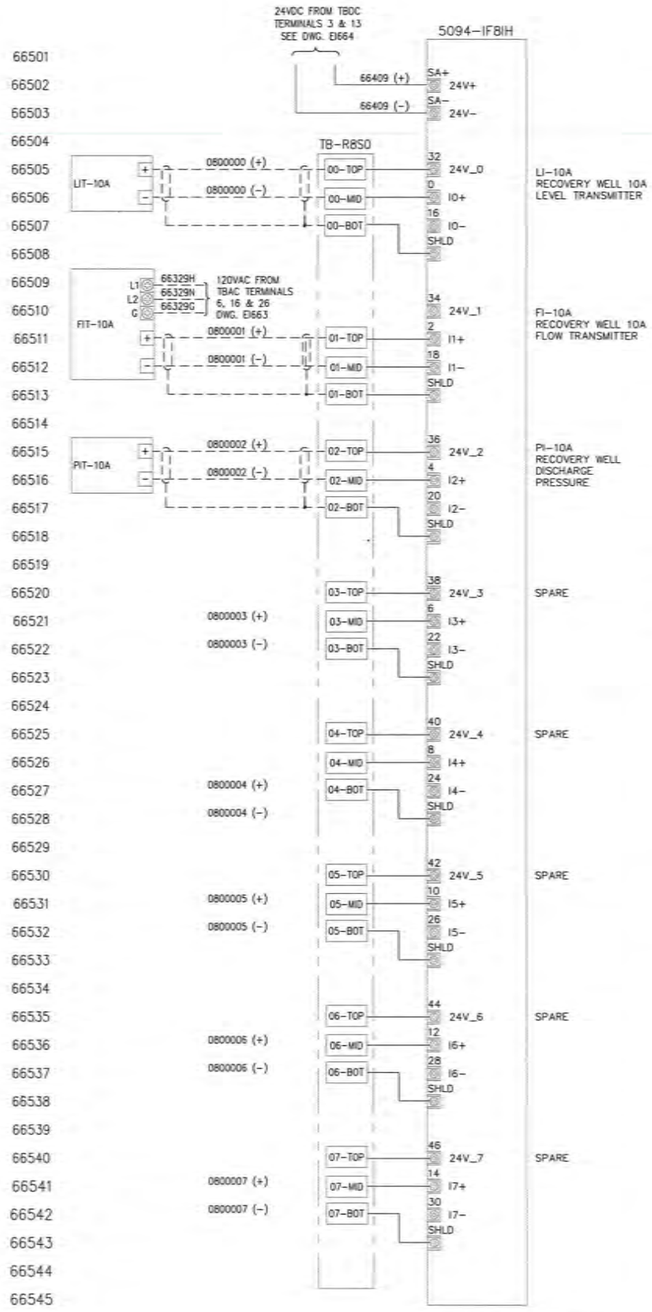

A-B PT# 5094-IF8IH
AI, 4-20mA, HART, 8CHN
RACK 8, SLOT 0

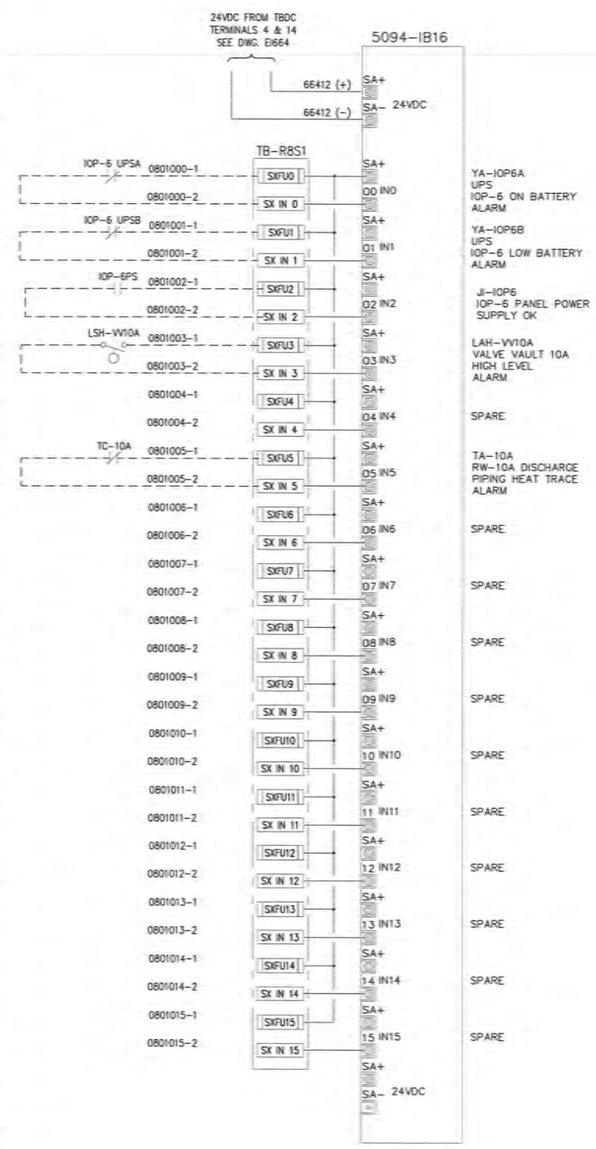

A-B PT# 5094-IB16
DISCRETE INPUT (24VDC)
RACK 8, SLOT 1

LEGEND:

——————— INTERNAL PANEL WIRING (BY PANEL FABRICATOR)

- - - - - - EXTERNAL PANEL WIRING (BY ELECTRICAL CONTRACTOR)

REFERENCE DRAWINGS:

EI660	IOP-6 LAYOUT PANEL & B.O.M
EI661	IOP-6 CONTROL SUB-PANEL LAYOUT & B.O.M
EI662	IOP-6 CONTROL PANEL TERMINAL DETAILS
EI663	IOP-6 CONTROL PANEL 120VAC POWER LADDER
EI664	IOP-6 CONTROL PANEL 24VDC POWER LADDER
EI665	IOP-6 CONTROL PANEL RACK 8 SLOTS 0 & 1 WIRING
EI666	NOT USED
EI667	NOT USED
EI668	NOT USED
EI669	NOT USED
TN601	CONTROL SYSTEM ARCHITECTURE

THIS DRAWING PRODUCED ON AUTOCAD
DO NOT REVISE MANUALLY

"THIS DOCUMENT IS THE PROPERTY OF NAVAL FACILITIES ENGINEERING COMMAND, PREPARED BY TETRA TECH ENGINEERING CORPORATION PC, AND IS PROVIDED UPON THE CONDITION THAT IT WILL NOT BE REPRODUCED, COPIED, OR ISSUED TO A THIRD PARTY, AND WILL BE USED SOLELY FOR THE ORIGINAL INTENDED PURPOSE AND SOLELY FOR THE EXECUTION OR REVIEW OF THE ENGINEERING CONSTRUCTION OF THE PROJECT".

IT IS A VIOLATION OF THE NEW YORK STATE EDUCATION LAW, ARTICLE 145, FOR ANY PERSON, UNLESS UNDER THE DIRECTION OF A NEW YORK STATE LICENSED PROFESSIONAL ENGINEER, TO ALTER AN ITEM ON THIS DOCUMENT IN ANY WAY.

ISSUED FOR BID - FEBRUARY 2026

NAVFAC

TETRA TECH
www.tetratech.com
4403 CORPORATION LANE, SUITE 300
VIRGINIA BEACH, VA 23462
PHONE: (757) 461-3703 FAX: (757) 461-4148
A/E INFO

APPROVED
FOR COMMANDER NAVFAC

ACNYF
As per document from Nicole Cowens, NAVFAC MIDLANT PL1/EV3.

SATISFACTORY TO	DATE 04/24/2026
DES JJK	DRW JJK CHK WS
PM/DM	
BRANCH MANAGER	
CHIEF ENG/ARCH	
FIRE PROTECTION	

NAVAL FACILITIES ENGINEERING SYSTEMS COMMAND - MID - ATLANTIC
NAVAL INDUSTRIAL RESERVE ORDNANCE PLANT
NAVAL WEAPONS INDUSTRIAL RESERVE PLANT BETHPAGE, NEW YORK
PHASE III - TREATMENT PLANT
IOP-6 CONTROL PANEL RACK 8 SLOTS 0 & 1

SCALE:	AS NOTED
(PROJECT NO.):	
CONTR. CONTR. NO.	
NAVFAC DRAWING NO.	##
SHEET	OF
	EI665

FILE NAME: Y:\03-Projects\Federal\NAVFAC\112008005_WE24_PHASE III GWTP_2023\3- Working Files\Drawings\IAC\EI663 - EI665.dwg LAYOUT NAME: EI665 PLOTTED: Tuesday, April 21, 2026 - 8:18am USER: BILSlonebriver

NAMEPLATE SCHEDULE

ITEM	MK NO.	LINE 1	LINE 2
A	11	AP-1 PANEL	
B	11	TB1	
C	12	T-910	
D	12	T-920	
E	12	T-930	

PANEL BILL OF MATERIAL

ITEM	QUAN	DESCRIPTION	SUPPLIER
1	1	WALL MOUNTED ENCLOSURE WITH 1/4 TURN LATCH 16"H x 12"W x 6"D, NEMA 4X HOFFMAN CAT. NO. CSD16126SS (OR EQUAL)	PANEL SHOP
2	1	SUB PANEL 14.2"H x 10.2"W 16"H x 12"W x 6"D, NEMA 4X HOFFMAN CAT. NO. CCP1612 (OR EQUAL)	PANEL SHOP
3	1	HORN NEMA 450E VIBRATONE, NEMA 4X, 24VDC FEDERAL SIGNAL CAT. NO. 450E-024 (OR EQUAL)	PANEL SHOP
4	1	PUSHBUTON, MOMENTARY CONTACT, W / BLACK CAP, 1 N.O. CONTACT ALLEN-BRADLEY CAT. No. 800T-A2D1 (OR EQUAL) CUSTOM LEGEND PLATE MARKED "ALARM SILENCE" ALLEN BRADLEY CAT. No. 800T-X559 (OR EQUAL)	PANEL SHOP
5	3	PILOT LIGHT, 24VDC W/RED LENS ALLEN-BRADLEY CAT. No. 800T-800T-QH24R (OR EQUAL) CUSTOM LEGEND PLATE MARKED "HIGH LEVEL" ALLEN BRADLEY CAT. No. 800T-X559 (OR EQUAL)	PANEL SHOP
6	AS REQ'D.	TS 35 x 7.5 mm SLOTTED STEEL DIN RAIL (ALUMINUM NOT ACCEPTED) ALLEN BRADLEY CAT. NO. 1492-EAHJ35	PANEL SHOP
7	1	GROUP MARKER ALLEN BRADLEY CAT. NO. 1492-GM35	PANEL SHOP
8	2	END ANCHOR ALLEN BRADLEY CAT. NO. 1492-ERL35	PANEL SHOP
9	12	FEED THROUGH TERMINAL 300V ALLEN BRADLEY CAT. NO. 1492-WM4	PANEL SHOP
10	1	PARTITION PLATE ALLEN BRADLEY CAT. NO. 1492-PPM3	PANEL SHOP
11	AS REQ'D.	PHENOLIC NAMEPLATE 1/2"H x 2 3/4"W WHITE W/BLACK 1/4" HIGH LETTERS, SEE NAMEPLATE SCHEDULE	PANEL SHOP
12	AS REQ'D.	PHENOLIC NAMEPLATE 1/2"H x 1 3/4"W WHITE W/BLACK 1/4" HIGH LETTERS, SEE NAMEPLATE SCHEDULE	PANEL SHOP
13	AS REQ'D.	SLOTTED WIRE DUCT 1 1/2"W x 3"H / WITH COVER PANDUIT	PANEL SHOP

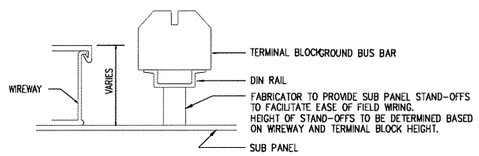

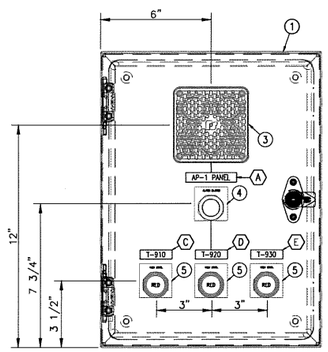

AP-1
DOOR ARRANGEMENT
SCALE: 3" = 1'-0"

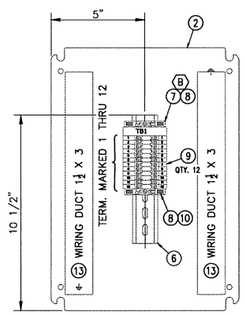

AP-1
SUB-PANEL ARRANGEMENT
SCALE: 3" = 1'-0"

REFERENCE DRAWINGS:

E1101 GWTP INSTRUMENT LOCATION PLAN
E1636 IOP-3 CONTROL PANEL RACK 4 SLOTS 2 & 3 WIRING
E1638 IOP-3 CONTROL PANEL RACK 5 SLOTS 0 & 1 WIRING

THIS DRAWING PRODUCED ON AUTOCAD
DO NOT REVISE MANUALLY

"THIS DOCUMENT IS THE PROPERTY OF NAVAL FACILITIES ENGINEERING COMMAND, PREPARED BY TETRA TECH ENGINEERING CORPORATION PC, AND IS PROVIDED UPON THE CONDITION THAT IT WILL NOT BE REPRODUCED, COPIED, OR ISSUED TO A THIRD PARTY, AND WILL BE USED SOLELY FOR THE ORIGINAL INTENDED PURPOSE AND SOLELY FOR THE EXECUTION OR REVIEW OF THE ENGINEERING CONSTRUCTION OF THE PROJECT".

IT IS A VIOLATION OF THE NEW YORK STATE EDUCATION LAW, ARTICLE 145, FOR ANY PERSON, UNLESS UNDER THE DIRECTION OF A NEW YORK STATE LICENSED PROFESSIONAL ENGINEER, TO ALTER AN ITEM ON THIS DOCUMENT IN ANY WAY.

ISSUED FOR BID - FEBRUARY 2026

NAVFAC

STATE OF NEW YORK
NICOLE FRANCO
080336
4/24/26
LICENSED PROFESSIONAL ENGINEER

TETRA TECH
www.tetratech.com
4433 CORPORATION LANE, SUITE 300
VIRGINIA BEACH, VA 23462
PHONE: (757) 461-3708 FAX: (757) 461-4148

A/E INFO

APPROVED
FOR COMMANDER NAVFAC

ACTIVITY
As per document from Nicole Cowana, NAVFAC MIDLANT PLL/EV3.

SATISFACTORY TO DATE 04/24/2026

DES JJK	DRW JJK	CHK WS

PM/DM
BRANCH MANAGER
CHIEF ENG/ARCH
FIRE PROTECTION

NAVAL FACILITIES ENGINEERING SYSTEMS COMMAND - MID - ATLANTIC
RWDS
NAVAL WEAPONS INDUSTRIAL RESERVE PLANT BETHPAGE, NEW YORK
NAVAL INDUSTRIAL RESERVE ORDNANCE PLANT
PHASE III - TREATMENT PLANT

AP-1 CHEMICAL UNLOADING ALARM PANEL LAYOUT

SCALE: AS NOTED
EPROJECT NO.:
CONSTR. CONTR. NO.
NAVFAC DRAWING NO. ##
SHEET OF

E1690

FILE NAME: Y:\03-Projects\Federal\NAVFAC\112008005_WE24_PHASE III GWTP_2023\3. Working Files\Drawings\Mc\E1690.dwg LAYOUT NAME: E1690 PLOTTED: Tuesday, April 21, 2026 - 8:20am USER: BILSlonebroker

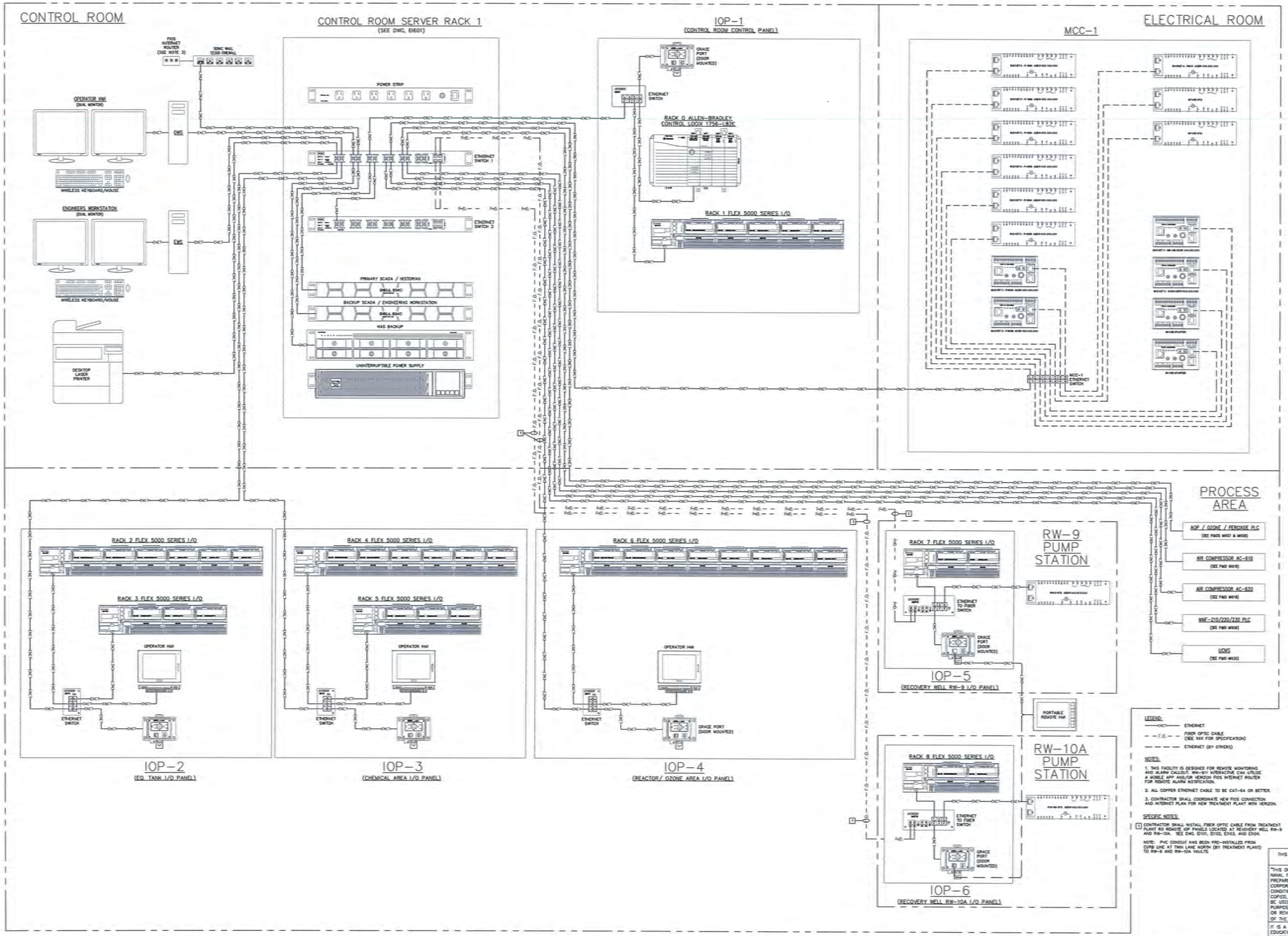

ISSUED FOR BID - FEBRUARY 2026

THIS DRAWING PRODUCED ON AUTOCAD DO NOT REVISE MANUALLY

"THIS DOCUMENT IS THE PROPERTY OF NAVAL FACILITIES ENGINEERING COMMAND, PREPARED BY TETRA TECH ENGINEERING CORPORATION PC, AND IS PROVIDED UPON THE CONDITION THAT IT WILL NOT BE REPRODUCED, COPIED, OR ISSUED TO A THIRD PARTY, AND WILL BE USED SOLELY FOR THE ORIGINAL INTENDED PURPOSE AND SOLELY FOR THE EXECUTION OR REVIEW OF THE ENGINEERING CONSTRUCTION OF THE PROJECT".

IT IS A VIOLATION OF THE NEW YORK STATE EDUCATION LAW, ARTICLE 145, FOR ANY PERSON, UNLESS UNDER THE DIRECTION OF A NEW YORK STATE LICENSED PROFESSIONAL ENGINEER, TO ALTER AN ITEM ON THIS DOCUMENT IN ANY WAY.

NAVFAC

STATE OF NEW YORK — MICHAEL PETER JOSEPH CARLSON — 041414 — DECEMBER

TETRA TECH
www.tetratech.com
4403 CORPORATION LANE, SUITE 300
VIRGINIA BEACH, VA 23462
PHONE: (757) 461-3755 FAX: (757) 461-4148
A/E INFO

APPROVED
FOR COMMANDER NAVFAC

ACTIVITY
As per document from Nicole Cowand, NAVFAC MIDLANT PLL/EV3

SUBMITTED TO DATE 04/24/2026

DES	DRW	CHK
JJK	JJK	WS

PM/DM
BRANCH MANAGER
CHIEF ENG/ARCH
FIRE PROTECTION

NAVAL FACILITIES ENGINEERING SYSTEMS COMMAND - MID - ATLANTIC
NAVAL INDUSTRIAL RESERVE ORDNANCE PLANT
PHIO9 NAVAL WEAPONS INDUSTRIAL RESERVE PLANT BETHPAGE, NEW YORK
PHASE III - TREATMENT PLANT
SYSTEM ARCHITECTURE

SCALE: AS NOTED
GPROJECT NO.: -
CONSTR. CONTR. NO.
NAVFAC DRAWING NO. ##
SHEET OF -
TN601

FILE NAME: Y:\03-Projects\Federal\NAVFAC\120208005_WK24_PHASE III GWTP_2023\3. Working Files\Drawings\MCS\TN601.dwg LAYOUT NAME: TN601 PLOTTED: Tuesday, April 21, 2026 - 8:21am USER: BILSlonebreker