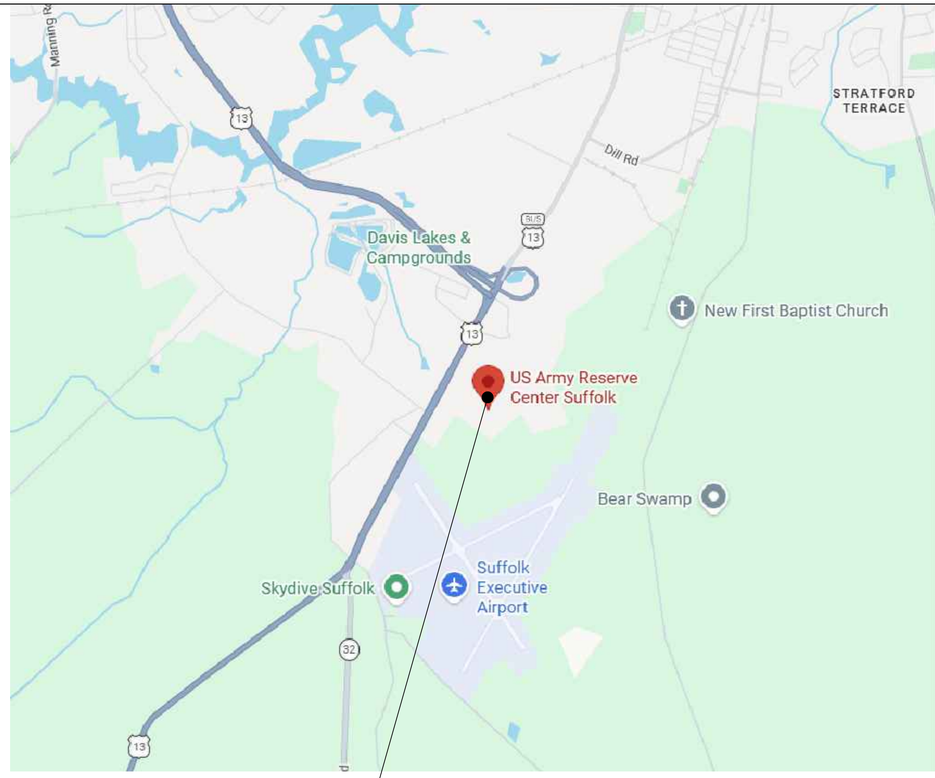

SUFFOLK USARC

PROJECT LOCATION

CONSTRUCTION OF LOAD RAMP AT VA701

UNCLASSIFIED

CAD·GIS·SI
SUPPORT BRANCH
99th READINESS DIVISION
Directorate of Public Works

99th READINESS DIVISION
DPW - CAD DESIGN TEAM

DRAWN: JC	CHECKED: SS	SHEET: 1 OF 4
FIELD VERIFIED: TH		DATE: 15MAY2026

SUFFOLK USARC
VA701 (51074)/LOADING RAMP PROPOSAL
NOTES
886 CAROLINA RD.
SUFFOLK, VA 23434

GENERAL NOTES

1. SITE PLANS AND CONTOURS ARE DEVELOPED FROM GEOGRAPHIC INFORMATION SYSTEM FILES. CONTRACTOR SHALL PERFORM A TOPOGRAPHIC SURVEY TO DETERMINE A MINIMUM OF 4 EXISTING GROUND SURFACE ELEVATIONS IN THE AREA AROUND THE NEW CONCRETE RAMP. TOP OF THE HIGH RAMP SHALL BE 4'-0" ABOVE EXISTING GRADE AS SHOWN ON THE RAMP PLAN. INFORMATION FOR A SURVEY MONUMENT IS SHOWN BELOW.

2. REFERENCE ELEVATION OF 100'-0" SHOWN ON THE STRUCTURAL PLANS AND DETAILS IS NOT AN ACTUAL ELEVATION BUT A REFERENCE ELEVATION TO ESTABLISH TOPS OF SLAB AND FOOTINGS, ETC.

3. REPORT DISCREPANCIES IN DIMENSIONS BETWEEN DIFFERENT DRAWINGS TO THE CONTRACTING OFFICER PRIOR TO BEGINNING WORK IN AREAS THAT WILL BE AFFECTED.

4. CONSTRUCTION MEANS, METHODS, TECHNIQUES, AND SEQUENCES AND SUPERVISION OF THE WORK ARE THE SOLE RESPONSIBILITY OF THE CONTRACTOR.

~~5. REPRODUCTION OF CONTRACT DRAWINGS SHALL NOT BE USED AS SHOP DRAWINGS UNDER ANY CIRCUMSTANCES.~~

6. PRIOR TO EXCAVATION, CONTRACTOR SHALL MARK ALL UNDERGROUND UTILITIES. WHERE A CONFLICT IS SUSPECTED, CONTRACTOR SHALL CONTACT THE CONTRACTING OFFICER PRIOR TO BEGINNING EXCAVATION.

FOUNDATION NOTES

1. FOUNDATIONS HAVE BEEN DESIGNED TO BEAR ON UNDISTURBED, FIRM NATURAL SOIL OR ENGINEERED FILL CAPABLE OF SUPPORTING A NET ALLOWABLE DESIGN BEARING PRESSURE OF 2,000 PSF.

~~2. PRIOR TO PLACING FOUNDATION CONCRETE, CONTRACTOR SHALL HIRE A GEOTECHNICAL PROFESSIONAL ENGINEER TO VERIFY THE SOIL BEARING CAPACITY AND CONSISTENCY OF THE FOUNDATION SOIL. THE GEOTECHNICAL ENGINEER SHALL USE A CALIBRATED HAND PROVING RING PENETROMETER OR SIMILAR EQUIPMENT TO VERIFY SOIL BEARING CAPACITY. IF THE SOIL IS FOUND NOT TO MEET THE BEARING CAPACITY, THE GEOTECHNICAL ENGINEER SHALL PROVIDE A CORRECTIVE ACTION. CONTRACTOR SHALL SUBMIT THE ACTION TO THE CONTRACTING OFFICER FOR APPROVAL.~~

2. ADEQUATELY PROTECT FOUNDATION EXCAVATIONS TO PREVENT WATER FROM ACCUMULATING AND STANDING IN THE EXCAVATION BOTTOMS.

3. DO NOT PLACE FOUNDATION CONCRETE ON FROZEN OR SATURATED SUBGRADES.

4. ENSURE THAT EARTH-FORMED FOOTINGS CONFORM TO THE SHAPE, LINES AND THICKNESSES INDICATED ON THE FOUNDATION PLAN. EXCAVATION WIDTHS SHALL BE A MINIMUM OF 4 INCHES GREATER THAN DIMENSIONS INDICATED.

5. PLACE FOUNDATION CONCRETE THE SAME DAY EXCAVATIONS ARE MADE OR AS SOON AS PRACTICAL THEREAFTER.

6. DO NOT INSTALL FOUNDATIONS UNTIL FOUNDATION WORK HAS BEEN COORDINATED WITH ADJACENT UNDERGROUND UTILITIES AND STRUCTURES.

7. EXISTING SURFACE IN PROJECT AREA IS GRAVEL FOR PARKING AND STAGING. CONTRACTOR SHALL FINISH THE GRAVEL SURFACE TO PRE PROJECT CONDITIONS AFTER RAMP AND BOLLARDS ARE INSTALLED. CONTRACTOR SHALL MATCH EXISTING GRADES.

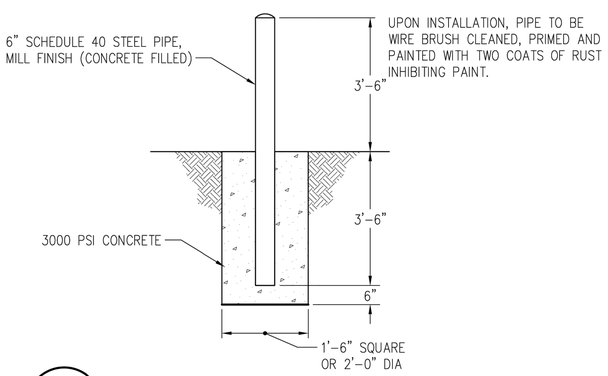

A4
S-001
FIXED BOLLARD DETAIL
N.T.S.

CONCRETE CONSTRUCTION NOTES

1. ALL STRUCTURAL CONCRETE CONSTRUCTION SHALL BE IN ACCORDANCE WITH THE PROVISIONS OF THE AMERICAN CONCRETE INSTITUTE (ACI) SPECIFICATIONS FOR STRUCTURAL CONCRETE (ACI 301-05). ALL CONCRETE CONSTRUCTION PERFORMED BY THE CONTRACTOR SHALL BE IN ACCORDANCE WITH ACI 318-05.

2. CAST-IN-PLACE CONCRETE SHALL ATTAIN THE FOLLOWING MINIMUM 28-DAY COMPRESSIVE STRENGTHS (f'c):

A. ALL CONCRETE 4000 PSI

3. CONCRETE DENSITY SHALL BE NORMAL WEIGHT UNLESS SPECIFICALLY OTHERWISE NOTED.

4. CONCRETE REINFORCING STEEL SHALL BE DEFORMED BARS CONFORMING TO ASTM A615/A615M, GRADE 60.

5. WELDED WIRE FABRIC SHALL CONFORM TO ASTM A185. PROVIDE SHEET-TYPE WELDED WIRE FABRIC. SHEET LAPS SHALL BE TIED AND LAPPED ONE FULL MESH SPACING.

6. CONCRETE REINFORCING STEEL SHALL BE CONTINUOUS UNLESS OTHERWISE INDICATED. CONTINUOUS REINFORCING STEEL SHALL BE LAPPED IN ACCORDANCE WITH THE REQUIREMENTS OF ACI 318.

7. MINIMUM CONCRETE COVER FOR REINFORCING STEEL SHALL BE AS INDICATED. IN NO CASE SHALL REINFORCEMENT COVER BE LESS THAN THE REQUIREMENTS OF ACI 301.

A. CONCRETE DEPOSITED AGAINST THE GROUND 3"
B. CONCRETE EXPOSED TO EARTH OR WEATHER 1 1/2"

8. CONCRETE REINFORCING STEEL MARKED STANDARD HOOK SHALL HAVE A 90-DEGREE HOOK UNLESS OTHERWISE NOTED. STIRRUP, TIE AND 180-DEGREE HOOKS AND 90-DEGREE HOOKS SHALL CONFORM TO THE REQUIREMENTS OF ACI 318.

10. ALL EMBEDDED ITEMS SHALL BE PROPERLY PLACED, ACCURATELY POSITIONED, AND MAINTAINED SECURELY IN PLACE PRIOR TO AND DURING CONCRETE PLACEMENT.

11. REINFORCING STEEL SHALL BE SPREAD AT SLEEVES, TIEBACKS, RECESSES AND OTHER EMBEDDED ITEMS UNLESS OTHERWISE INDICATED. REINFORCEMENT SHALL NOT BE CUT TO FACILITATE PLACEMENT OF EMBEDDED ITEMS.

12. NO CONCRETE SHALL BE PLACED UNTIL THE CONTRACTING OFFICER OR THE CONTRACTING OFFICER'S DESIGNATED REPRESENTATIVE HAS INSPECTED ALL EMBEDDED WORK, INCLUDING REINFORCEMENT.

13. ALL EXPOSED CONCRETE EDGES SHALL BE CHAMFERED 3/4" UON.

14. ALUMINUM SHALL NOT BE PLACED IN DIRECT CONTACT WITH CONCRETE UNLESS EFFECTIVELY COATED OR COVERED TO PREVENT ALUMINUM-CONCRETE REACTION AND ELECTROLYTIC ACTION BETWEEN ALUMINUM AND STEEL.

15. CONSTRUCT RUBBER DOCK BUMPERS OF RESILIENT, LAMINATED, RUBBERIZED-FABRIC PADS, ASSEMBLED ON STEEL FRAMES. RUBBERIZED FABRIC SHALL CONFORM TO ASTM D 2000. PUNCH MATERIAL TO RECEIVE 3/4 INCH SUPPORTING RODS . BUMPERS SHALL STAND OUT A MINIMUM OF 6 INCHES FROM THE DOCK FACE AND BE CLOSED WITH TWO STRUCTURAL STEEL ANGLES MANUFACTURED UNDER 1,500 POUNDS. SUBMIT MANUFACTURERS CUT SHEETS TO THE CONTRACTING OFFICER FOR REVIEW AND APPROVAL PRIOR TO ORDERING.

STEEL NOTES

1. STEEL HANDRAILS SHALL BE ASTM A53 GRADE B, FY=35 KSI. SHAPE AND DIMENSIONS AS INDICATED. GLAVANIZE ALL RAILINGS IN ACCORDANCE WITH ASTM A123. SUBMIT HANDRAIL AND CONNECTION SHOPE DRAWINGS TO CONTRACTING OFFICER FOR APPROVAL PRIOR TO ORDERING AND FABRICATION.

2. UNLESS OTHERWISE NOTED, STRUCTURAL STEEL SHALL BE IN ACCORDANCE WITH THE FOLLOWING:

A. CHANNELS AND S-SHAPES ASTM A36/ A36M
B. PLATES AND ANGLES ASTM A36/ A36M
C. ANCHOR BOLTS ASTM A3O7 (NUTS AND WASHERS TO MATCH)

3. ALL SHOP AND FIELD WELDING SHALL BE BY CERTIFIED WELDERS AND SHALL CONFORM TO AWS STANDARDS. USE E70XX ELECTRODES UNLESS NOTED OTHERWISE. CURRENT AWS CERTIFICATIONS SHALL BE AVAILABLE AT THE JOB SITE FOR REVIEW BY THE CONTRACTING OFFICER'S REPRESENTATIVE.

4. FIELD CUTTING OF STRUCTURAL STEEL MEMBERS BY ANY TRADE SHALL NOT BE PERMITTED. BOLT HOLES SHALL NOT BE CUT OR ENLARGED BY FLAME CUTTING IN THE FIELD.

5. THE MINIMUM BOLT DIAMETER SHALL BE 3/4".

UNCLASSIFIED

CAD·GIS·SI
SUPPORT BRANCH
99th READINESS DIVISION
Directorate of Public Works

99th READINESS DIVISION
DPW - CAD DESIGN TEAM

DRAWN: JC | CHECKED: SS | SHEET: 2 OF 4
FIELD VERIFIED: TH | DATE: 15MAY2026

SUFFOLK USARC
VA701 (51074)/LOADING RAMP PROPOSAL
NOTES
886 CAROLINA RD.
SUFFOLK, VA 23434

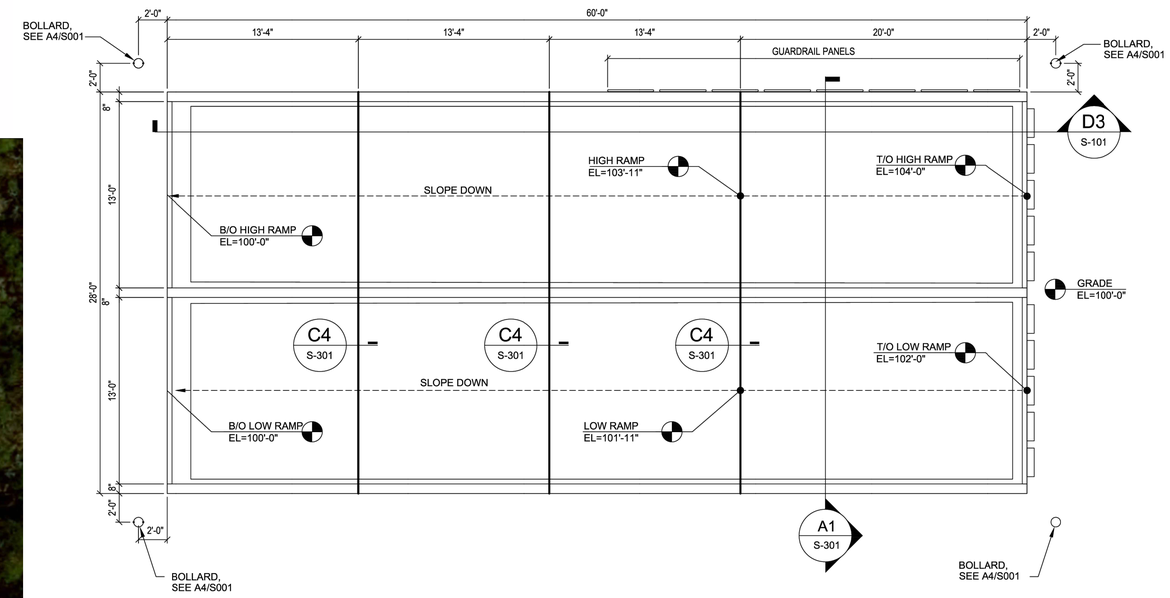

B3 S-101 BI-LEVEL LOADING RAMP PLAN
3/16" = 1'-0"

N

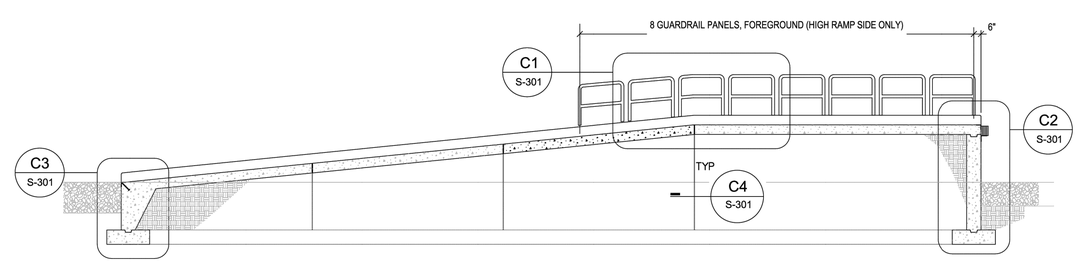

D3 S-101 BI-LEVEL LOADING RAMP LONGITUDINAL SECTION
3/16" = 1'-0"

1"=50' 0' 25' 50' 100' 100'

3/16"=1'-0" 0' 1' 2' 3' 4' 5' 10' 15'

GENERAL NOTES:

1. ALL EXPOSED METAL TO BE GALVANIZED IAW ASTM A-123.
2. SPOT ELEVATIONS ARE FOR REFERENCE ONLY. SEE SHEET S-001 FOR NOTES ON ELEVATIONS.
3. SEE S-001 AND SPECS FOR CONCRETE INFORMATION.

UNCLASSIFIED

CAD·GIS·SI SUPPORT BRANCH
99th READINESS DIVISION
Directorate of Public Works

99th READINESS DIVISION
DPW - CAD DESIGN TEAM

DRAWN: JC | CHECKED: SS | SHEET: 3 OF 4
FIELD VERIFIED: TH | DATE: 15MAY2026

SUFFOLK USARC
VA701 (51074)/LOADING RAMP PROPOSAL
NOTES
886 CAROLINA RD.
SUFFOLK, VA 23434

GENERAL NOTES:

1. ALL EXPOSED METAL TO BE GALVANIZED IAW ASTM A-123.
2. SPOT ELEVATIONS ARE FOR REFERENCE ONLY. SEE SHEET S-001 FOR NOTES ON ELEVATIONS.
3. SEE S-001 AND SPECS FOR CONCRETE INFORMATION.

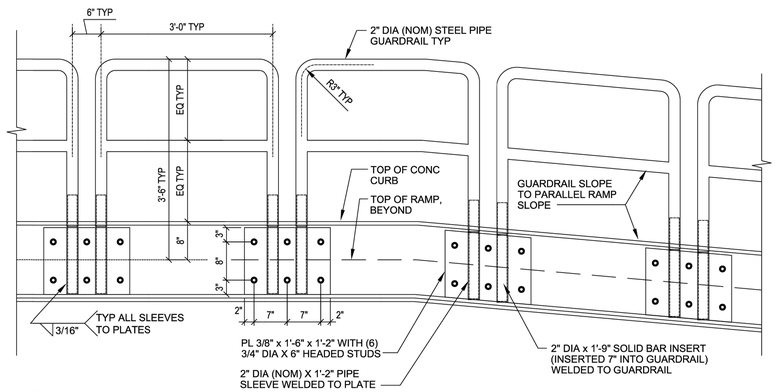

C1 S-301 PARTIAL ELEVATION
3/4" = 1'-0"

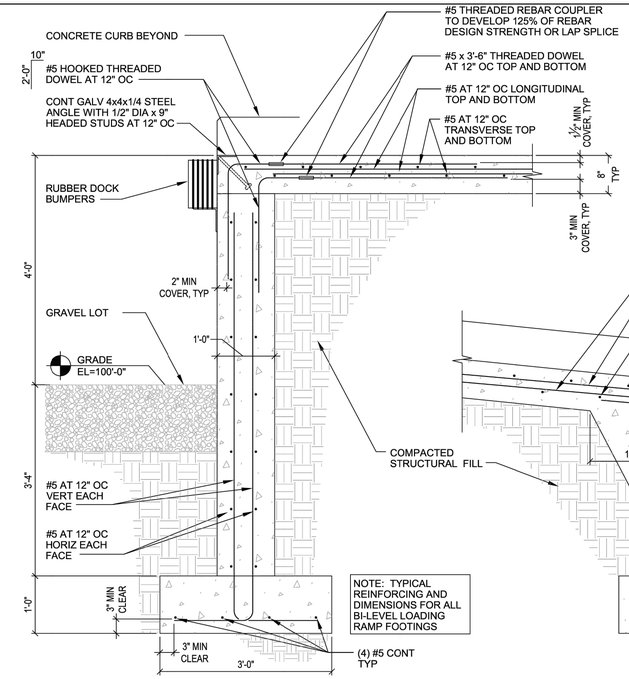

C2 S-301 SECTION
3/4" = 1'-0"

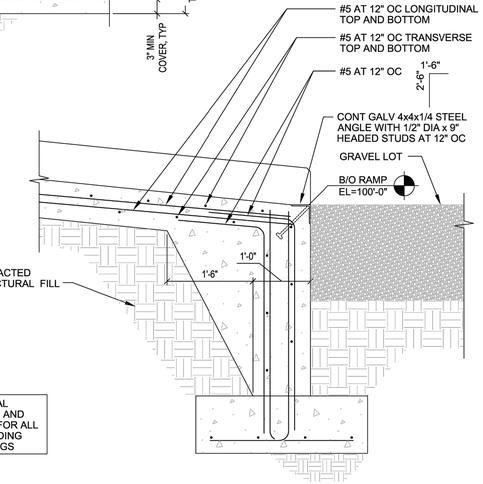

C3 S-301 SECTION
3/4" = 1'-0"

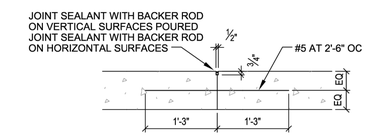

C4 S-301 DETAIL
3/4" = 1'-0"

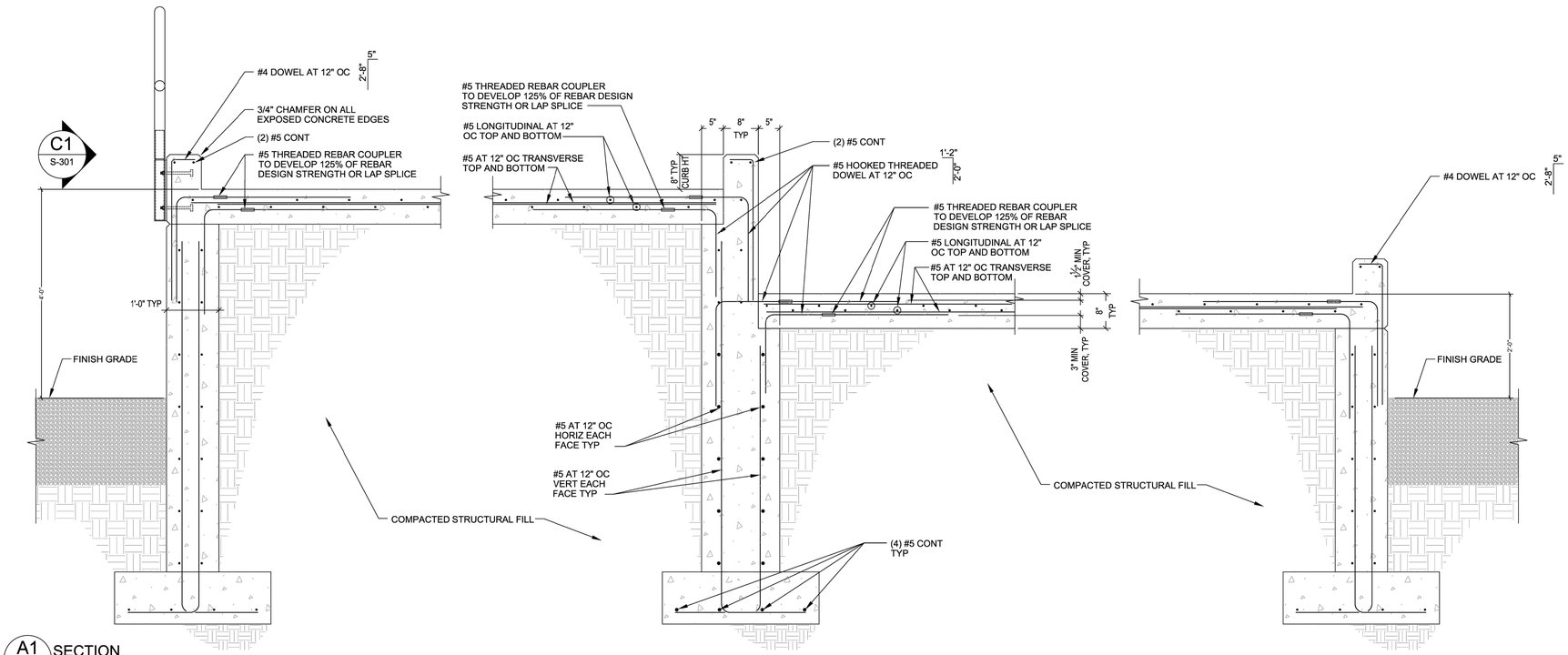

A1 S-301 SECTION
3/4" = 1'-0"

GRAPHIC SCALE
3/4"=1'-0" 0 1' 2' 3'

UNCLASSIFIED

CAD·GIS·SI SUPPORT BRANCH
99th READINESS DIVISION
Directorate of Public Works

99th READINESS DIVISION
DPW - CAD DESIGN TEAM

DRAWN: JC	CHECKED: SS	SHEET: 4 OF 4
FIELD VERIFIED: TH		DATE: 15MAY2026

SUFFOLK USARC
VA701 (51074)/LOADING RAMP PROPOSAL
NOTES
886 CAROLINA RD.
SUFFOLK, VA 23434