SPECIFICATIONS

1.0 Specifications Description:

50 horsepower electric motor

1. 50 Hp
2. 230/460 volts
3. 3 Phase
4. 60 Hz
5. 1775 RPM
6. Frame Type: 324/6T
7. Motor Type: AC
8. Foot-mounted
9. Full Load Amps: 59
10. Catalog Number: **05018ET3E326T-W22**
11. Product: 11438076

(*Name of Item*)

Quantity:2

Unit Type: *Each*

Minimum Requirements:

1. 50 Hp
2. 230/460 volts
3. 3 Phase
4. 60 Hz
5. 1775 RPM
6. Frame Type: 324/6T
7. Motor Type: AC
8. Foot-Mounted
9. Full Load Amps: 59
10. Catalog Number: **05018ET3E326T-W22**
11. Product: 11438076

2.0 Place of Delivery

PA NBAF WAREHOUSE 966 FACILITIES

1200 KRETSCHMER DRIVE SUITE 100

MANHATTAN KS 66502

3.0 Delivery Schedule

Item	QTY	Unit	Place of Delivery	Delivery Date
50 horsepower electric motor	2	each	Location above	45 days

4.0 Delivery Point of Contact

Travis Self

Utility Systems Operations Lead

National Bio and Agro-Defense Facility

USDA Agricultural Research Service (ARS)

P.O. Box 1807
Manhattan, KS 66505

Cell: 785-477-9033

Office: 785-712-3185

Email: travis.self@usda.gov

5.0 Additional Requirements

N/A

SPECIFICATIONS

1.0 Specifications Description:

100 horsepower electric motor

1. 100 Hp
2. 230/460 volts
3. 3 Phase
4. 60 Hz
5. 1775 RPM
6. Frame Type: 404T
7. Motor Type: AC
8. Enclosure Type: OPSB
9. Full Load Amps: 115
10. SPEC#M44E192W048C1

(*Name of Item*)

Quantity:1

Unit Type: *Each*

Minimum Requirements:

1. 100 Hp
2. 230/460 volts
3. 3 Phase
4. 60 Hz
5. 1775 RPM
6. Frame Type: 404T
7. Motor Type: AC
8. Enclosure Type: OPSB
9. Full Load Amps: 115
10. SPEC#M44E192W048C1

2.0 Place of Delivery

PA NBAF WAREHOUSE 966 FACILITIES

1200 KRETSCHMER DRIVE SUITE 100

MANHATTAN KS 66502

3.0 Delivery Schedule

Item	QTY	Unit	Place of Delivery	Delivery Date
100 horse power electric motor	1	each	Location above	45 days

4.0 Delivery Point of Contact

Travis Self

Utility Systems Operations Lead

National Bio and Agro-Defense Facility

USDA Agricultural Research Service (ARS)

P.O. Box 1807
Manhattan, KS 66505

Cell: 785-477-9033

Office: 785-712-3185

Email: travis.self@usda.gov

5.0 Additional Requirements

N/A

SPECIFICATIONS

1.0 Specifications Description:

MKL3 Series 93 Pneumatic Actuator

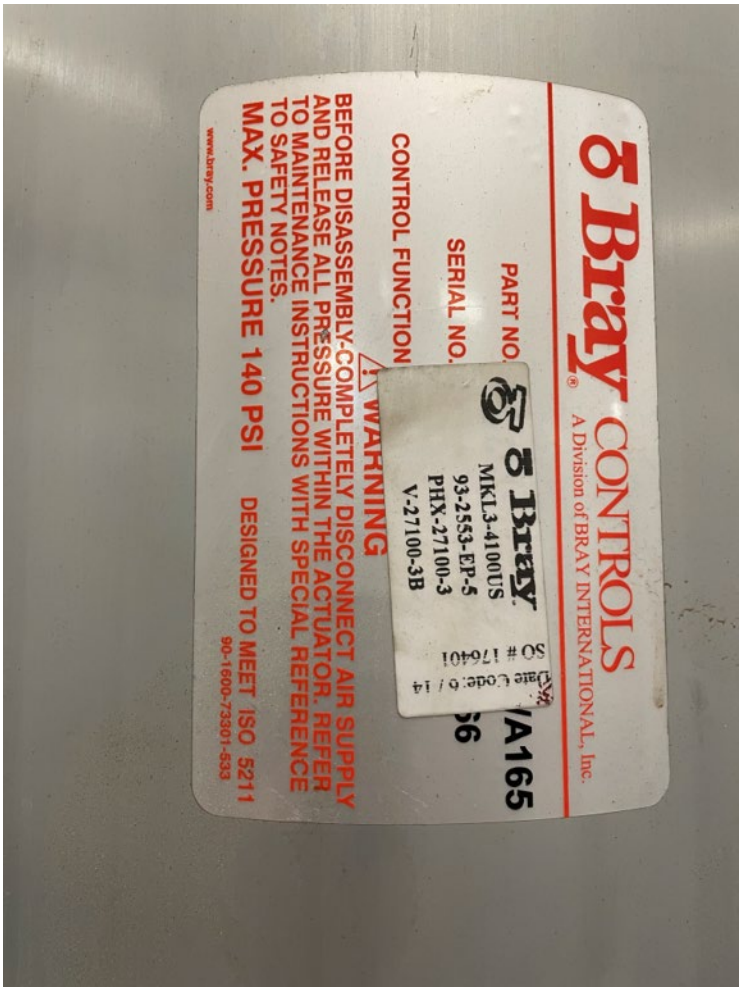

(*Name of Item*)

Quantity:3

Unit Type: *Each*

Minimum Requirements:

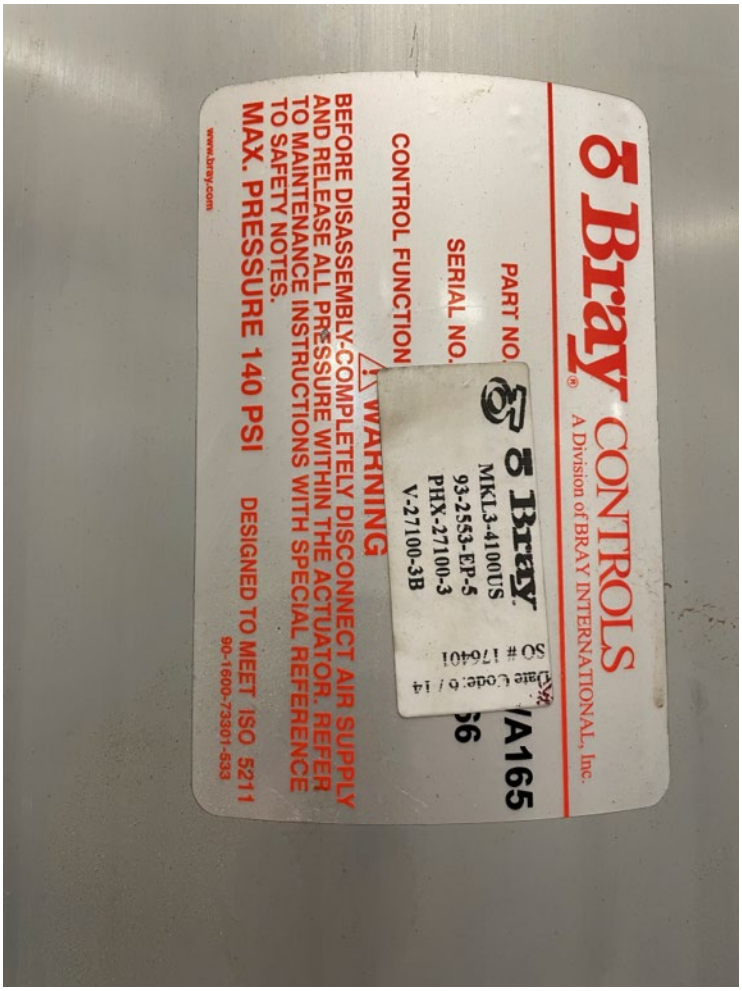

2.0 Place of Delivery

PA NBAF WAREHOUSE 966 FACILITIES

1200 KRETSCHMER DRIVE SUITE 100

MANHATTAN KS 66502

3.0 Delivery Schedule

Item	QTY	Unit	Place of Delivery	Delivery Date
Series 93 Pneumatic	3	each	Location above	45 days

4.0 Delivery Point of Contact

Travis Self

Utility Systems Operations Lead

National Bio and Agro-Defense Facility

USDA Agricultural Research Service (ARS)

P.O. Box 1807
Manhattan, KS 66505

Cell: 785-477-9033

Office: 785-712-3185

Email: travis.self@usda.gov

5.0 Additional Requirements

N/A

SPECIFICATIONS

1.0 Specifications Description:

NYL2-C160B Series 93 Pneumatic Actuator

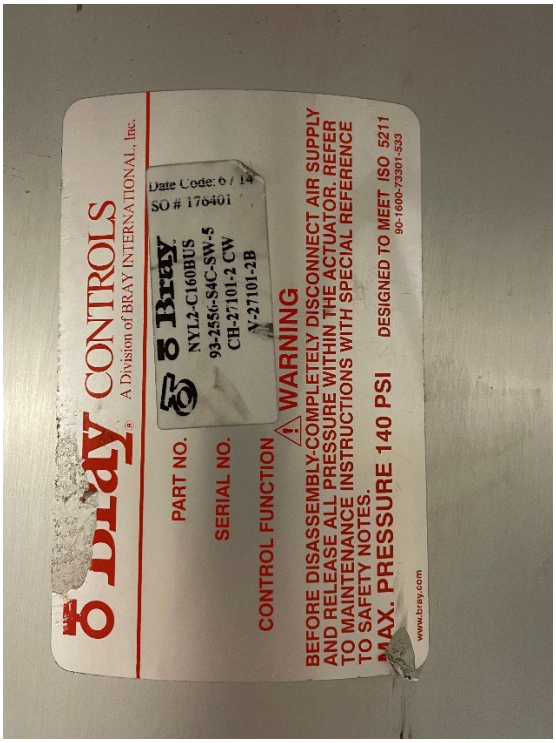

<u>NYL2-C160B Series 93 Actuator</u>

Quantity:3

Unit Type: *Each*

Minimum Requirements:

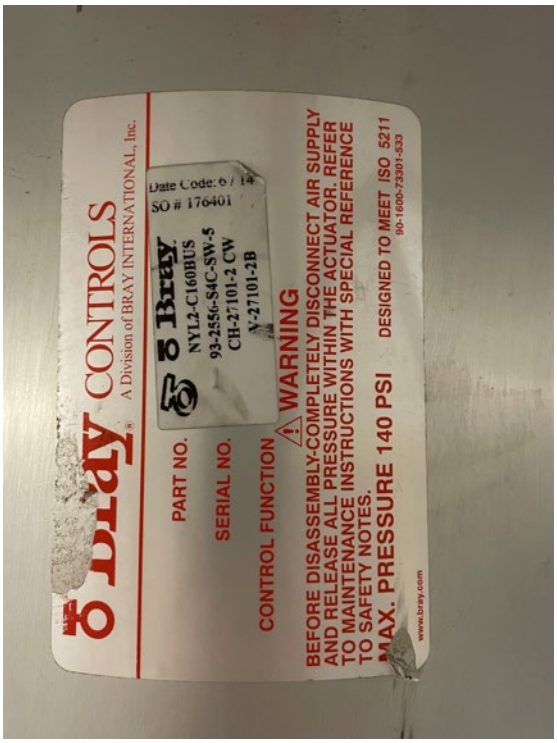

2.0 Place of Delivery

PA NBAF WAREHOUSE 966 FACILITIES

1200 KRETSCHMER DRIVE SUITE 100

MANHATTAN KS 66502

3.0 Delivery Schedule

Item	QTY	Unit	Place of Delivery	Delivery Date
NYL2-C160B Series 93 Pneumatic	3	each	Location above	45 days

4.0 Delivery Point of Contact

Travis Self

Utility Systems Operations Lead

National Bio and Agro-Defense Facility

USDA Agricultural Research Service (ARS)

P.O. Box 1807
Manhattan, KS 66505

Cell: 785-477-9033

Office: 785-712-3185

Email: travis.self@usda.gov

5.0 Additional Requirements

N/A

SPECIFICATIONS

1.0 Specifications Description:

NYL2-C100B Series 93 Pneumatic Actuator

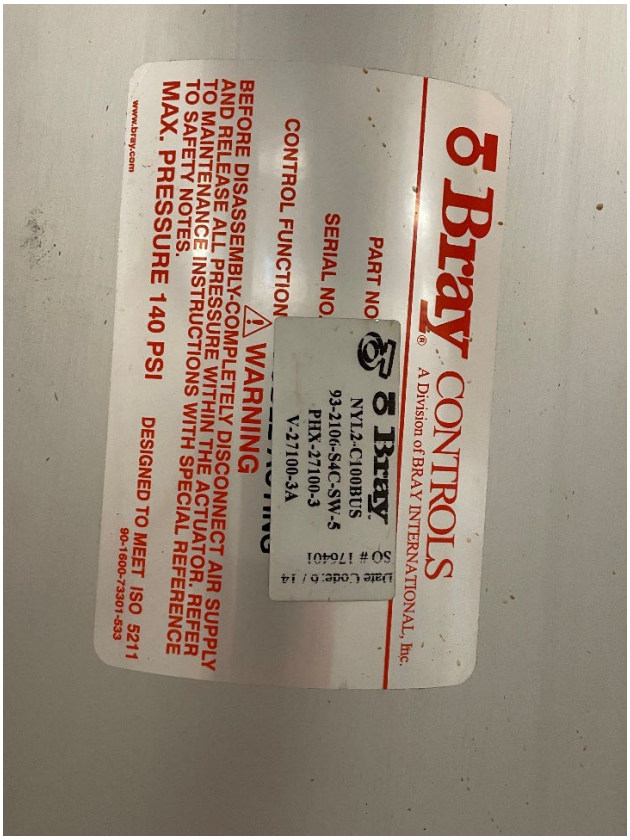

<u>NYL2-C100B Series 93 Actuator</u>

Quantity:3

Unit Type: *Each*

Minimum Requirements:

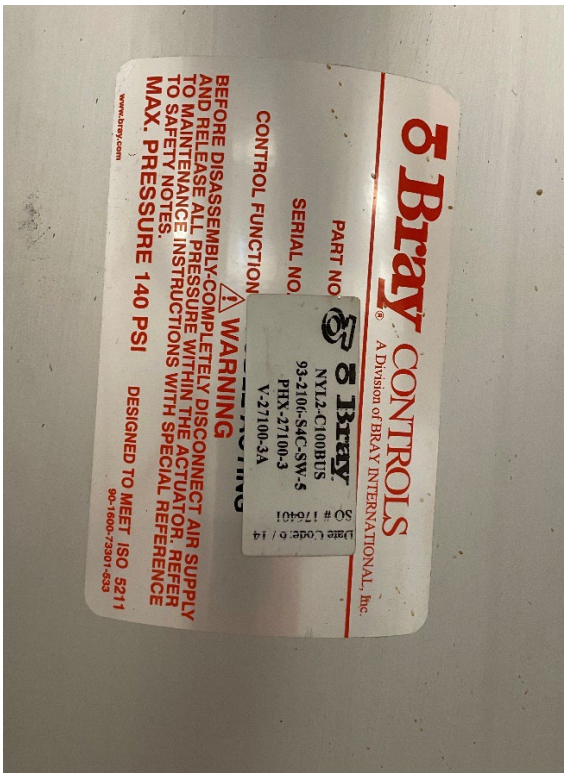

2.0 Place of Delivery

PA NBAF WAREHOUSE 966 FACILITIES

1200 KRETSCHMER DRIVE SUITE 100

MANHATTAN KS 66502

3.0 Delivery Schedule

Item	QTY	Unit	Place of Delivery	Delivery Date
NYL2-C100B Series 93 Actuator	3	each	Location above	45 days

4.0 Delivery Point of Contact

Travis Self

Utility Systems Operations Lead

National Bio and Agro-Defense Facility

USDA Agricultural Research Service (ARS)

P.O. Box 1807
Manhattan, KS 66505

Cell: 785-477-9033

Office: 785-712-3185

Email: travis.self@usda.gov

5.0 Additional Requirements

N/A

SPECIFICATIONS

1.0 Specifications Description:

1. Model #2250S Geareducer with inpro seal for Marley Cooling tower.

(*Name of Item*)

Quantity:1

Unit Type: *Each*

Minimum Requirements:

1. Model #2250S
2. Gear reducer assemblies shall be single-reduction right angle units
3. Gear reducers shall meet or exceed the requirements of CTI STD-111 and AGMA Std.6013-A06
4. service factor at applied horsepower shall not be less than 2.0
5. Gear reducers shall be designed to meet thermal heat rejection requirements
6. Heavy-duty housing shall be epoxy-coated, ASTM Class 20, grey cast iron
7. Bearings shall be tapered roller type. L10A.
8. Gears and bearings shall be splash-lubricated in a bath of oil which complies with the OEM's recommendations
9. Gear tooth finish shall be AGMA class 9 or better.

2.0 Place of Delivery

PA NBAF WAREHOUSE 966 FACILITIES

1200 KRETSCHMER DRIVE SUITE 100

MANHATTAN KS 66502

3.0 Delivery Schedule

Item	QTY	Unit	Place of Delivery	Delivery Date
Geareducer with inpro seal	1	each	Location above	45 days

4.0 Delivery Point of Contact

Travis Self

Utility Systems Operations Lead

National Bio and Agro-Defense Facility

USDA Agricultural Research Service (ARS)

P.O. Box 1807
Manhattan, KS 66505

Cell: 785-477-9033

Office: 785-712-3185

Email: travis.self@usda.gov

5.0 Additional Requirements

SPECIFICATIONS

1.0 Specifications Description:

Shell and Tube Heat Exchanger

1. Front Head: C. Iron
2. Tube sheet: Steel
3. Tubes: 304 Stainless Steel
4. Shell: Steel
5. Tube Sup: Steel
6. Head Inlet: 4 inch Threaded
7. Head Outlet: 4 inch Threaded
8. Top Inlet: 2 inch Threaded
9. Bottom outlet: 2 inch Threaded
10. Part #5-266-10-048-159

(*Name of Item*)

Quantity:1

Unit Type: *Each*

Minimum Requirements:

1. Front Head: C. Iron
2. Tube Sheet: Steel
3. Tubes: 304 Stainless Steel
4. Shell: Steel
5. Tube Sup: Steel
6. Head Inlet: 4 Inch Threaded
7. Head Out: 4 inch Threaded
8. Top Inlet: 2 inch Threaded
9. Bottom outlet: 2 inch Threaded
10. Part #5-266-10-048-159

2.0 Place of Delivery

PA NBAF WAREHOUSE 966 FACILITIES

1200 KRETSCHMER DRIVE SUITE 100

MANHATTAN KS 66502

3.0 Delivery Schedule

Item	QTY	Unit	Place of Delivery	Delivery Date
Shell and tube heat exchanger	1	each	Location above	45 days

4.0 Delivery Point of Contact

Travis Self

Utility Systems Operations Lead

National Bio and Agro-Defense Facility

USDA Agricultural Research Service (ARS)

P.O. Box 1807
Manhattan, KS 66505

Cell: 785-477-9033

Office: 785-712-3185

Email: travis.self@usda.gov

5.0 Additional Requirements

N/A

SPECIFICATIONS

1.0 Specifications Description:

Shell and Tube Heat Exchanger

1. Passes: 2
2. Type: Steam to Water
3. Water Inlet: 3 inch Threaded
4. Water Outlet: 3 inch Threaded
5. Steam Inlet: 6-inch Flange
6. Condensate outlet: 1 ½ inch Threaded
7. Air/Vent: 1 ½ inch Threaded
8. Model #E10212S

(*Name of Item*)

Quantity:1

Unit Type: *Each*

Minimum Requirements:

1. Passes: 2
2. Type: Steam to Water
3. Water Inlet: 3 inch Threaded
4. Water Outlet: 3 inch Threaded
5. Steam Inlet: 6-inch Flange
6. Condensate outlet: 1 ½ inch Threaded
7. Air/Vent: 1 ½ inch Threaded
8. Model #E10212S

2.0 Place of Delivery

PA NBAF WAREHOUSE 966 FACILITIES

1200 KRETSCHMER DRIVE SUITE 100

MANHATTAN KS 66502

3.0 Delivery Schedule

Item	QTY	Unit	Place of Delivery	Delivery Date
Shell and Tube Heat Exchanger	1	each	Location above	45 days

4.0 Delivery Point of Contact

Travis Self

Utility Systems Operations Lead

National Bio and Agro-Defense Facility

USDA Agricultural Research Service (ARS)

P.O. Box 1807
Manhattan, KS 66505

Cell: 785-477-9033

Office: 785-712-3185

Email: travis.self@usda.gov

5.0 Additional Requirements

N/A

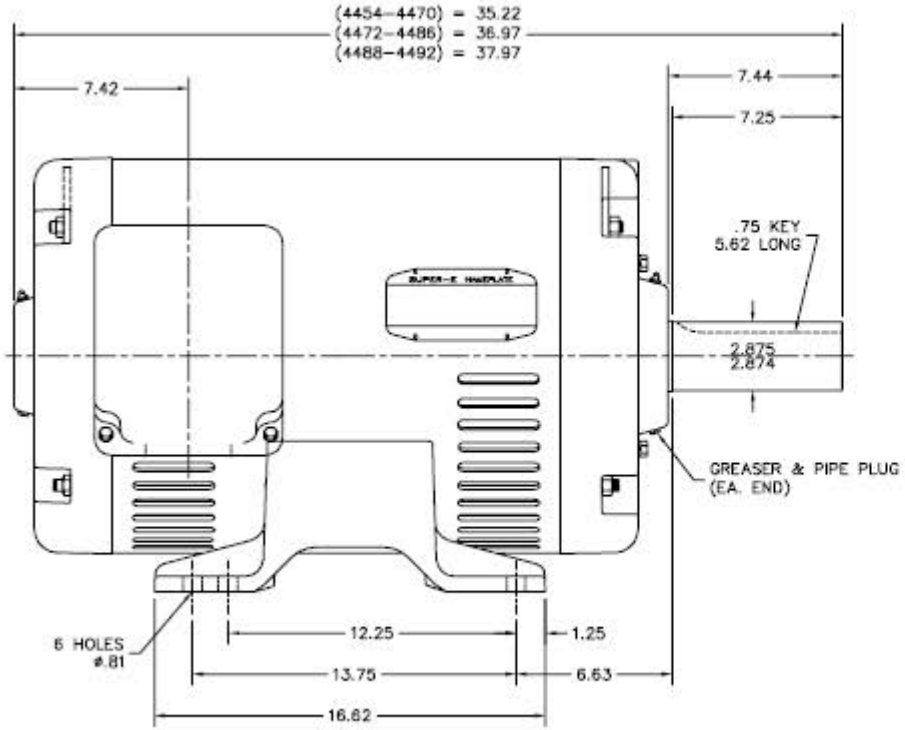
(4454–4470) = 35.22
(4472–4486) = 36.97
(4488–4492) = 37.97
7.42
7.44
7.25
.75 KEY
5.62 LONG
2.875
2.874
GREASER & PIPE PLUG
(EA. END)
6 HOLES
ø.81
12.25
1.25
13.75
6.63
16.62

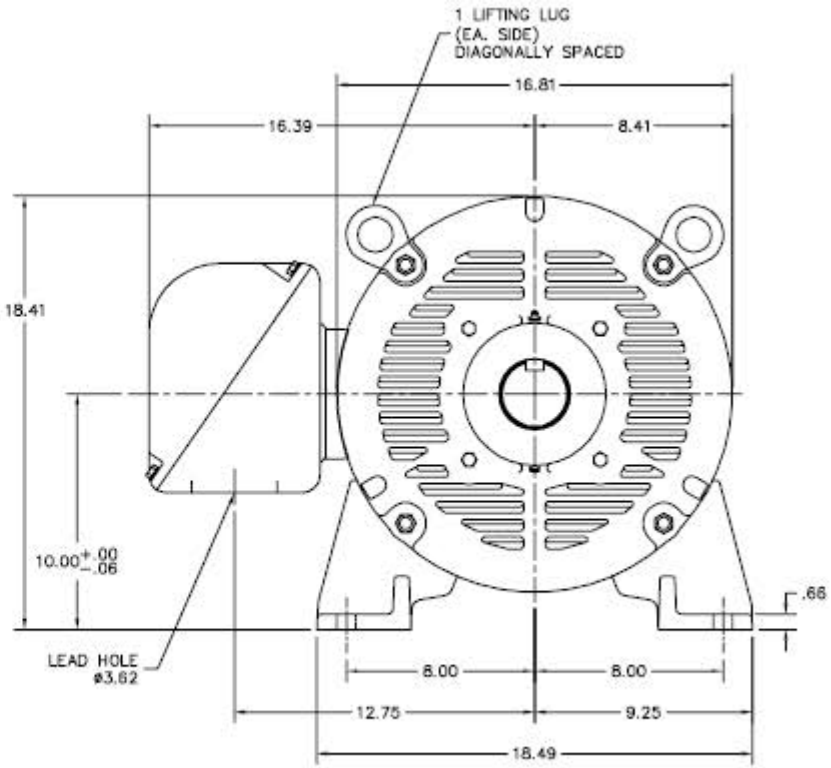
1 LIFTING LUG
(EA. SIDE)
DIAGONALLY SPACED
16.81
16.39
8.41
18.41
10.00 +.00 −.06
.66
LEAD HOLE
ø3.62
8.00
8.00
12.75
9.25
18.49

Pump Data Sheet

General

Project: NBAF – Department of Homeland Security
Identification: PCH-27102-5 thru PCH-27102-6
Service: Secondary Process Chilled Water
Location: 1st Floor
Type: Base Mount End Suction
Manufacturer: Grundfos/Paco
Model Number: 60157 LF

Performance

Capacity (Flow): 1,800 GPM
Head (Ft): 145ft
Max. Net Positive Suction Head Req. (Ft) 8.96ft
Efficiency (%) 83.73%
Horsepower required for non-overloading operation over entire pump curve: 93.67

Physical Characteristics

Suction Size: 8"
Discharge Size: 6"
Casing Material: Cast Iron ASTM A48-Class 35
Impeller Material: Silicon Bronze
Shaft Sleeve Material: Bronze
Shaft Material: Stressproof Steel
Seal Type: Viton Carbon Tung-Cbd
Seal Face Material: Stainless Steel
Seal Seat Material: Stainless Steel
Bearing Assembly Material
Working Pressure & Continuous Operating Temp: 68.69psi
Maximum Intermittent Temperature: 225 deg F

Motor

Manufacturer: Baldor
Horsepower: 100HP
Voltage: 230/460
Phase: 3
Hertz: 60
RPM: 1,775
Motor Type: AC
Enclosure Type: OPSB
Frame Type: 404T
Insulation Class: F
NEMA Design Designation: NA
Service Factor: NA
Nominal Efficiency: 95.4%
Nominal Power Factor: 85
Full Load Amps: 115
Variable Frequency Drive Driven: No, but suitable for VFD

Horsepower: 100HP
Voltage: 230/460
Phase: 3
Hertz: 60
RPM: 1,775
Motor Type: AC
Enclosure Type: OPSB
Frame Type: 404T
Insulation Class: F
NEMA Design Designation: NA
Service Factor: NA
Nominal Efficiency: 95.4%
Nominal Power Factor: 85
Full Load Amps: 115
Variable Frequency Drive Driven: No, but suitable for VFD

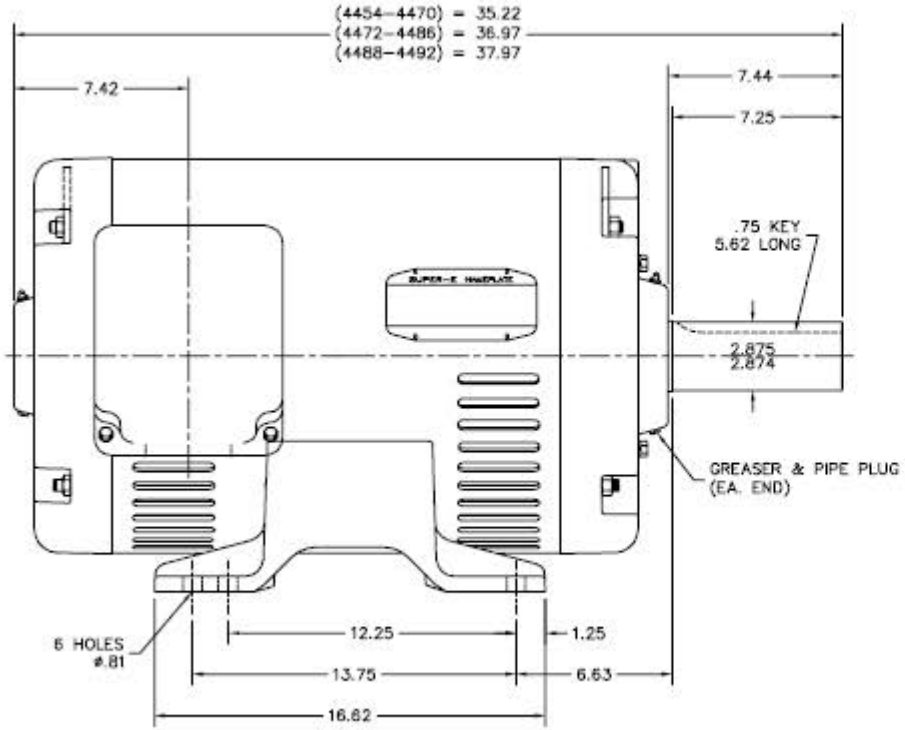
(4454–4470) = 35.22
(4472–4486) = 36.97
(4488–4492) = 37.97
7.42
7.44
7.25
.75 KEY
5.62 LONG
2.875
2.874
GREASER & PIPE PLUG
(EA. END)
6 HOLES
ø.81
12.25
1.25
13.75
6.63
16.62

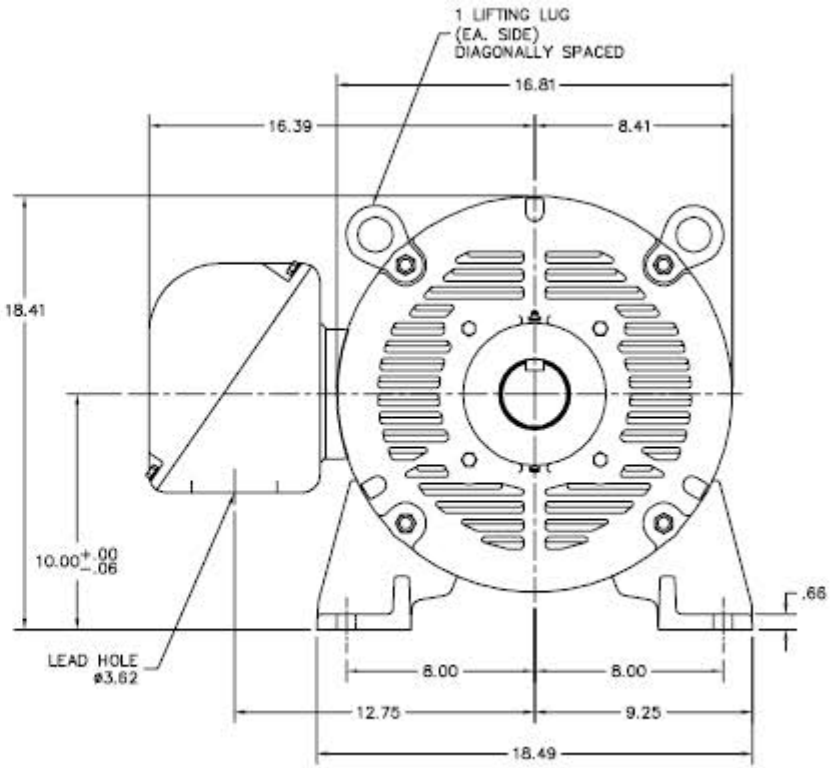
1 LIFTING LUG
(EA. SIDE)
DIAGONALLY SPACED
16.81
16.39
8.41
18.41
10.00 +.00 −.06
.66
LEAD HOLE
ø3.62
8.00
8.00
12.75
9.25
18.49

Horsepower: 100HP
Voltage: 230/460
Phase: 3
Hertz: 60
RPM: 1,775
Motor Type: AC
Enclosure Type: OPSB
Frame Type: 404T
Insulation Class: F
NEMA Design Designation: NA
Service Factor: NA
Nominal Efficiency: 95.4%
Nominal Power Factor: 85
Full Load Amps: 115
Variable Frequency Drive Driven: No, but suitable for VFD

WEG W22 COOLING TOWER

CC029A

Inverter Duty Motor

Severe Duty

NEMA Premium®

c UL us LISTED 3PT9

FOR SAFE AREA
MOD.TE1BFOXON

07/16/2025

For 60Hz: Class I, Div 2, Gr. A, B, C, D, 1.15SF-T3
Class I, Zone 2, IIC-T3
VT 1000:1, CT 20:1, 1.0SF

C US Energy Verified

AEGIS SGR BEARING PROTECTION RING INSTALLED

T05018ET3ECT326T-W22
MADE IN BRAZIL
T11972911

PH 3	FR 324/6T	HP(kW) 50.0(37.0)	Hz 60
V 230/460	A 118/59.2		IP55
NEMA NOM EFF 94.5 %		RPM 1775	
ENCL TEFC	DUTY CONT.	INS. CL. F ΔT 80 K	
PF 0.83	DES B	CODE G	AMB. 40°C
SF 1.25	SFA 148/74.0	ALT 1000 m.a.s.l.	

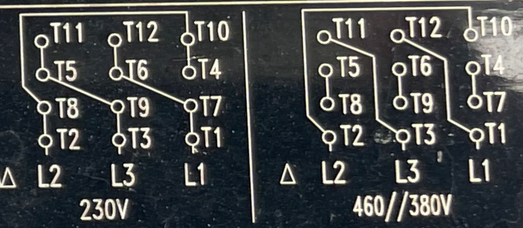

→ 6312-2RS-C3
→ 6212-2RS-C3

MOBIL POLYREX EM

600 Lbs

50HP 37kW 50Hz 380V 71.6A 1460RPM SF1.00 EFF 92.4% (IE1)

Z1103928006

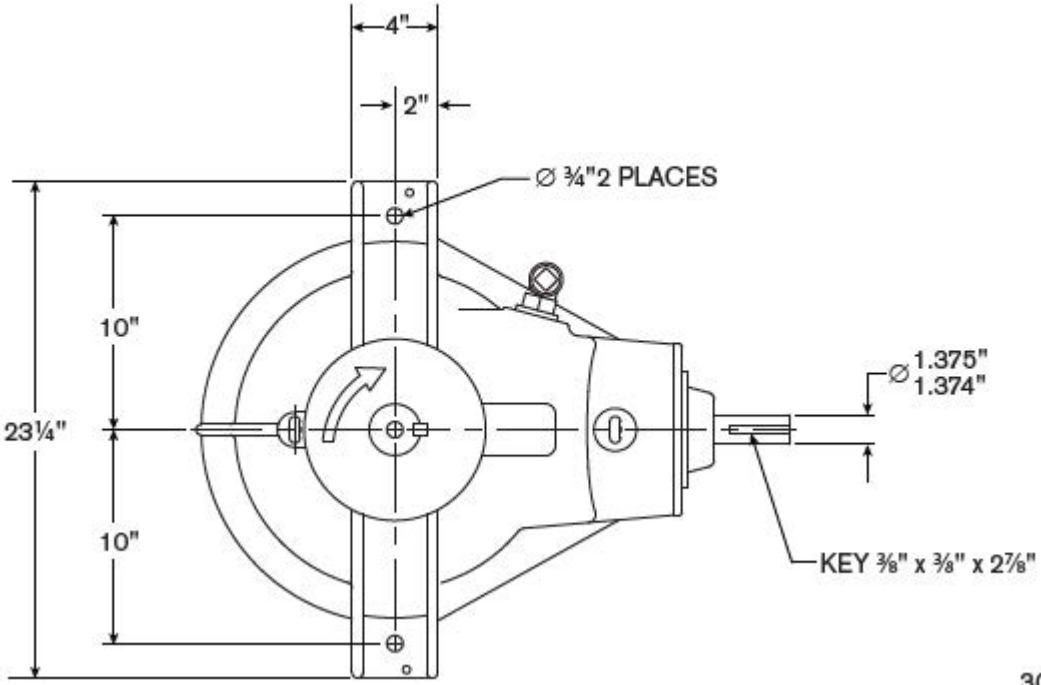
4"
2"
∅ ¾"2 PLACES
10"
23¼"
10"
∅ 1.375"
1.374"
KEY ⅜" x ⅜" x 2⅞"

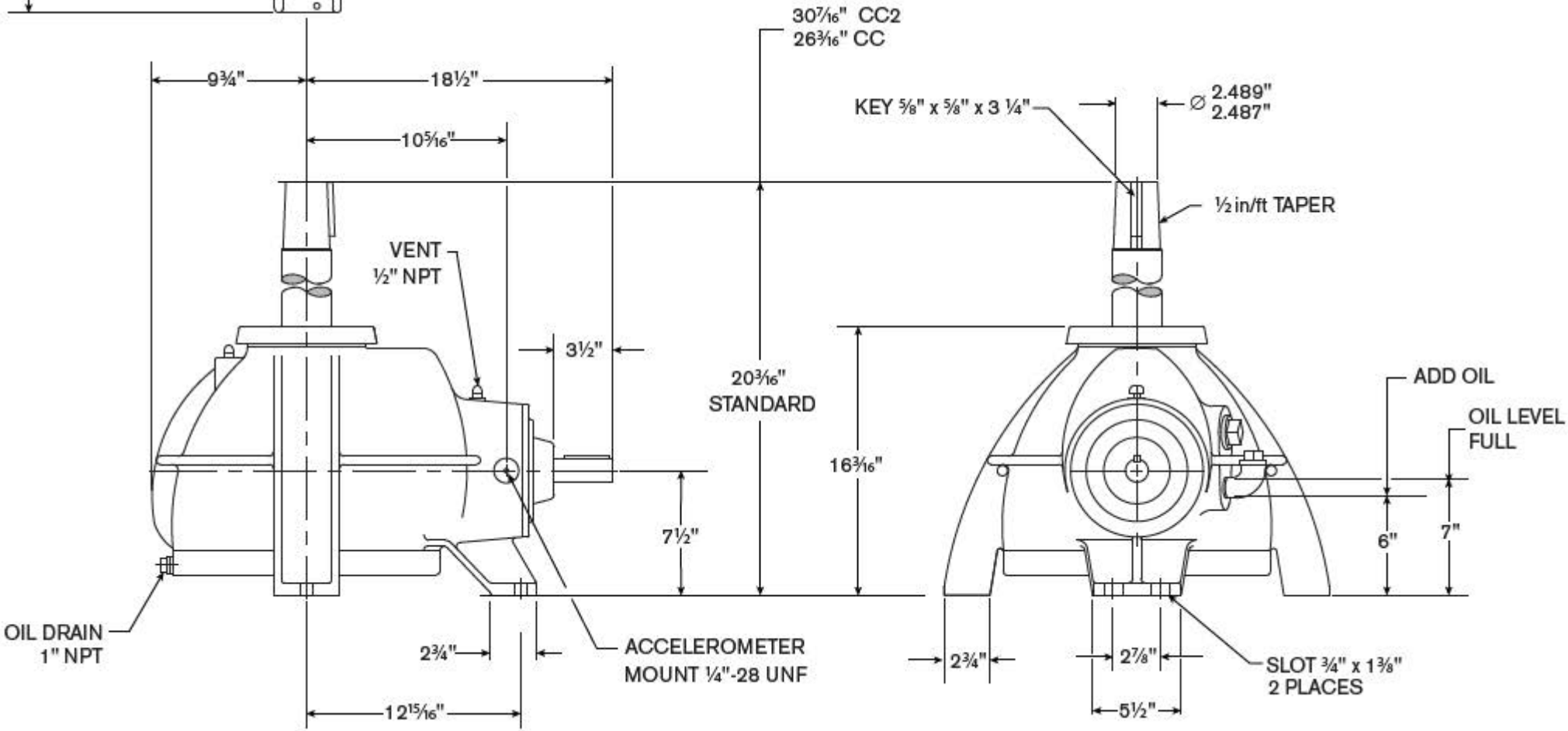
30 7/16" CC2
26 3/16" CC
9 3/4"
18 1/2"
10 5/16"
KEY 5/8" x 5/8" x 3 1/4"
∅ 2.489"
2.487"
1/2 in/ft TAPER
VENT
1/2" NPT
3 1/2"
20 3/16"
STANDARD
16 3/16"
ADD OIL
OIL LEVEL
FULL
7 1/2"
6"
7"
OIL DRAIN
1" NPT
2 3/4"
ACCELEROMETER
MOUNT 1/4"-28 UNF
2 3/4"
2 7/8"
SLOT 3/4" x 1 3/8"
2 PLACES
5 1/2"
12 15/16"