KEY MAP
NOT TO SCALE

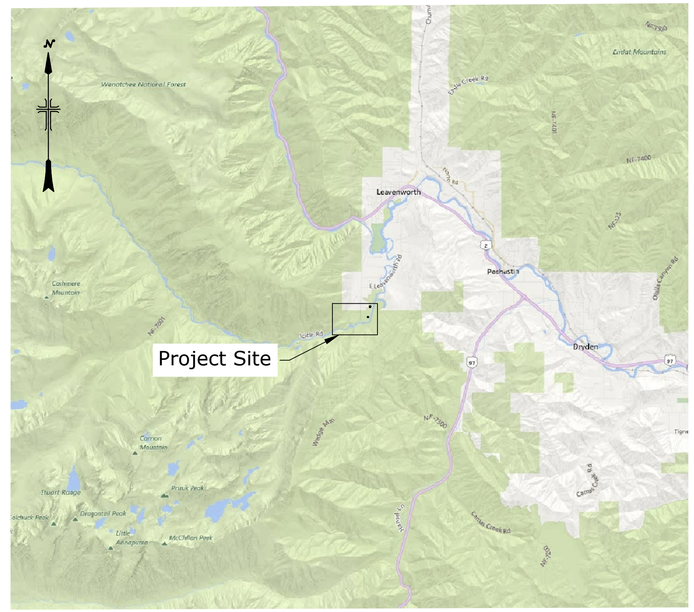

LOCATION MAP
0 10,000' 20,000'

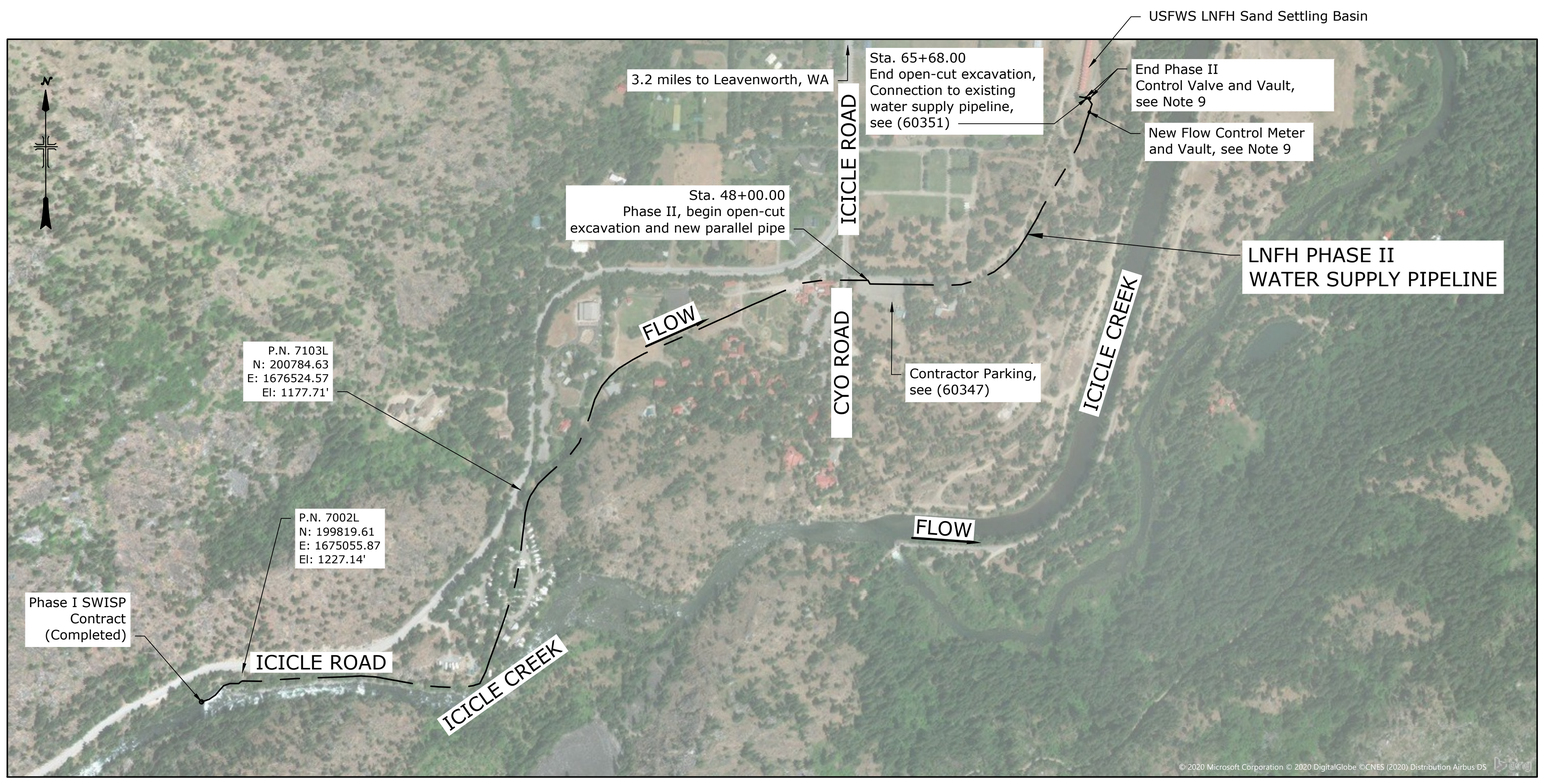

SITE MAP
0 400' 800'

NOTES

1. Contractor shall determine the voltage and clearance at all overhead power lines and share this information with the COR.
2. Stations are approximate and may be varied as directed by COR.
3. Minimum earth cover over the top of the pipe shall be 3.5 feet unless the line pipe is under a roadway or parking surface, and then the minimum cover is 5.0 feet, unless otherwise noted.
4. Where the line pipe crosses an existing pipe, a minimum clear distance of 2.0 feet outside-to-outside between line pipe and existing pipe shall be provided unless otherwise directed by COR.
5. Contractor to field verify alignment and depth of existing water supply pipeline prior to construction.
6. Contractor to field verify all features and existing utilities prior to construction.
7. Unknown elevations and sizes of existing utilities shall be determined by the contractor prior to work.
8. For contractor parking and temporary bypass pumping pipeline route partial site plans, see (60347).
9. For Vaults, see (60360) & (60361).

SURVEY CONTROL POINTS	
Name	Description
P.N. 7103L	Iron Pin In Monument Case
P.N. 7002L	EA Control Rebar And Cap

COORDINATES

1. Horizontal grid coordinates are shown in Washington State Plane, North Zone, U.S. Survey Feet units, based on the NAD83 horizontal datum and use a 1.0000620 ground-to-grid correction factor.
2. Vertical elevations are based on the NAVD88 vertical datum and are in U.S. Survey Feet units.

GEOLOGIC NOTES

For general Geologic information, see Specifications.

ABBREVIATIONS

CCP - Concrete Cylinder Pipe
CL - Centerline
CLSM - Controlled Low Strength Material
COIC - Cascades Orchard Irrigation Company
COR - Contracting Officer's Representative
CUA - Contractor Use Area
Dia. - Diameter
HDPE - High Density Polyethylene
I.D. - Inside Diameter
LNFH - Leavenworth National Fish Hatchery
O.D. - Outside Diameter
ROW - Right-of-Way
RSHS - Reclamation Safety and Health Standards
Sta. - Station
SWISP - Surface Water Intake Fish Screens and Fish Passage
USFWS - US Fish and Wildlife Service

SYMBOLS

Buried Telecommunication Line
℄ Pipe
Construction ROW
Culvert
Electrical Powerline
Fence
Manhole
Paved Road
℄ Centerline

RECLAMATION
Managing Water in the West

ALWAYS THINK SAFETY

U.S. DEPARTMENT OF THE INTERIOR
BUREAU OF RECLAMATION
COLUMBIA BASIN PROJECT
GRAVITY DIVISION

LEAVENWORTH STATION – FISH HATCHERY
EXISTING WATER SUPPLY PIPELINE REHABILITATION

REV NO		
1	2025-12-11	D ALL CIPP REMOVED FROM THE CONTRACT

K. PELZER
DESIGNED
K. PELZER
DRAWN
J. LORBERAU
CHECKED
K. PELZER, P.E.
TECH. APPR.
A. MARNER
APPROVED
PEER REVIEWER -CIVIL ENGINEER

DENVER, CO 2020-12-16

KEY MAP, LOCATION MAP, SITE MAP

222-D-60346

SHEET 1

LAST SAVED DATE 2025-12-11 LAST SAVED BY MHEKMATI

CAD SYSTEM AutoCAD 25.0s AGOFF FILENAME 222-D-60346-RD-1.DWG

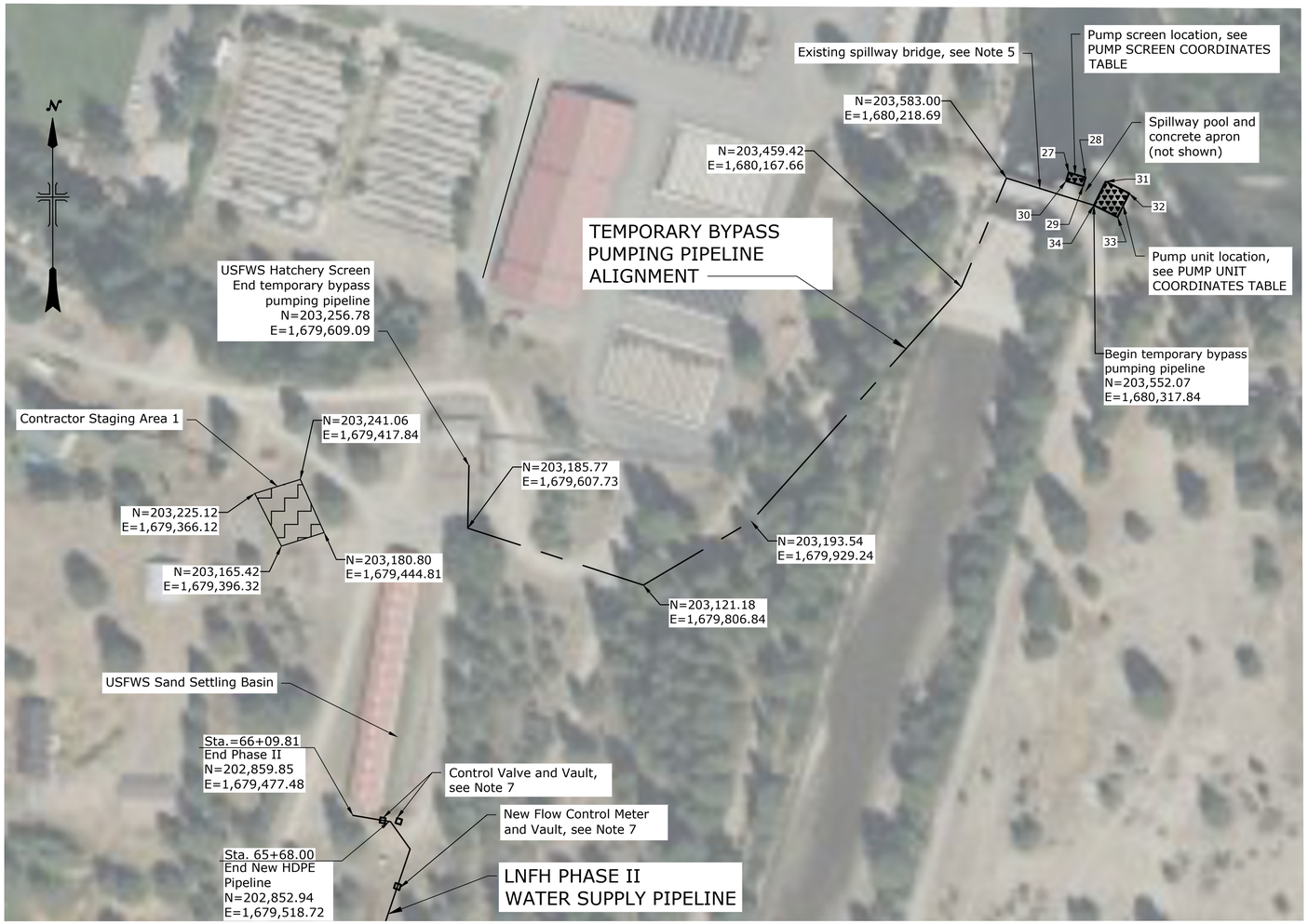

PARTIAL SITE MAP - TEMPORARY BYPASS PUMPING PIPELINE

0 80' 160'

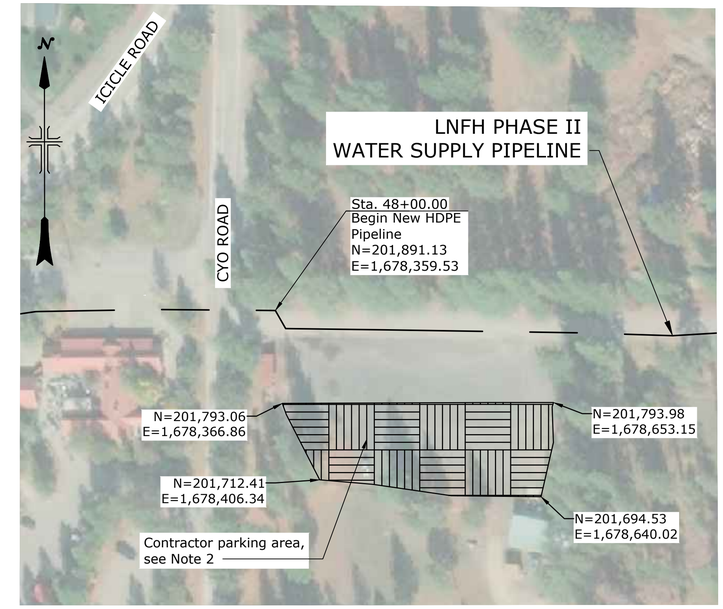

PARTIAL SITE MAP - CONTRACTOR PARKING AREA

0 80' 160'

PARTIAL SITE MAP - CONTRACTOR STAGING AREA

0 150' 300'

LEGEND

- Contractor staging area
- Contractor parking area
- Temporary pumping system

PUMP SCREEN COORDINATES TABLE		
Point Number	Northing	Easting
27	203,589.31	1,680,289.28
28	203,583.69	1,680,331.17
29	203,574.09	1,680,305.67
30	203,579.71	1,680,286.47

PUMP UNIT COORDINATES TABLE		
Point Number	Northing	Easting
31	203,578.94	1,680,331.17
32	203,565.61	1,680,358.04
33	203,538.73	1,680,344.71
34	203,552.07	1,680,317.84

NOTES

1. Temporary bypass pumping system shall be in accordance with Specifications and locations shown, unless otherwise approved by COR.
2. Existing parking lot to be shared with the general public and remain open at all times. All necessary safety devices, signage, traffic controls, or other features to protect the general public shall be installed and maintained in and around the Contractor Parking Area to the satisfaction of the COR.
3. For LNFH Phase II Water Supply Pipeline plan and profile, see (60354).
4. Unimpeded vehicle access across the spillway bridge shall be maintained in accordance with Specifications.
5. A 5.0 foot wide temporary pipe corridor shall be used, centered on the Temporary Bypass Pumping Pipeline alignment shown. The temporary system across the spillway bridge shall be as close to the northern bridge rail as practical.
6. Place pump screens in location shown, but no closer than 1.0 foot from downstream edge of concrete apron.
7. For Control Valve Vault and Flow Control Vault, see (60360) & (60361)

RECLAMATION
Managing Water in the West

ALWAYS THINK SAFETY

U.S. DEPARTMENT OF THE INTERIOR
BUREAU OF RECLAMATION
COLUMBIA BASIN PROJECT
GRAVITY DIVISION

LEAVENWORTH STATION – FISH HATCHERY
EXISTING WATER SUPPLY PIPELINE REHABILITATION

REV NO		
1	2025-12-10	D REISSUED UNDER NEW CONTRACT.

K. PELZER
DESIGNED
K. PELZER
DRAWN
J. LORBERAU
CHECKED
K. PELZER, P.E.
TECH. APPR.
A. MARNER
APPROVED
PEER REVIEWER -CIVIL ENGINEER

DENVER, CO 2020-12-16

PARTIAL SITE MAPS

222-D-60347

SHEET 1

LAST SAVED DATE 2025-12-11 LAST SAVED BY KPELZER

CAD SYSTEM AutoCAD 23.0s CAD FILENAME 222-D-60347-RD-1.DWG

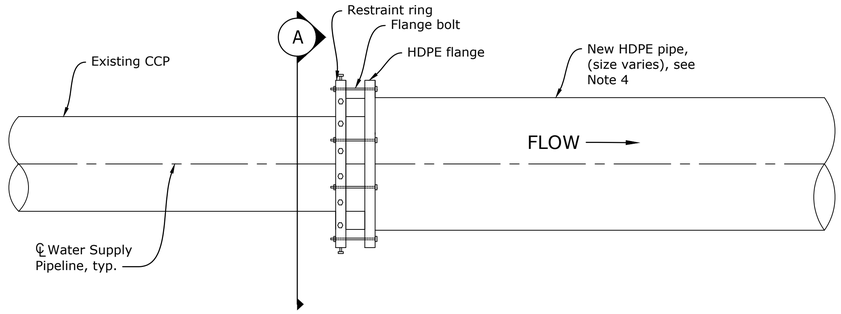

PARTIAL PLAN VIEW - EXISTING CCP TO NEW HDPE PIPE CONNECTION

NOT TO SCALE

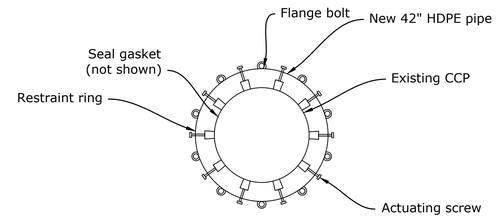

A SECTION - EXISTING CCP TO NEW HDPE CONNECTION

NOT TO SCALE

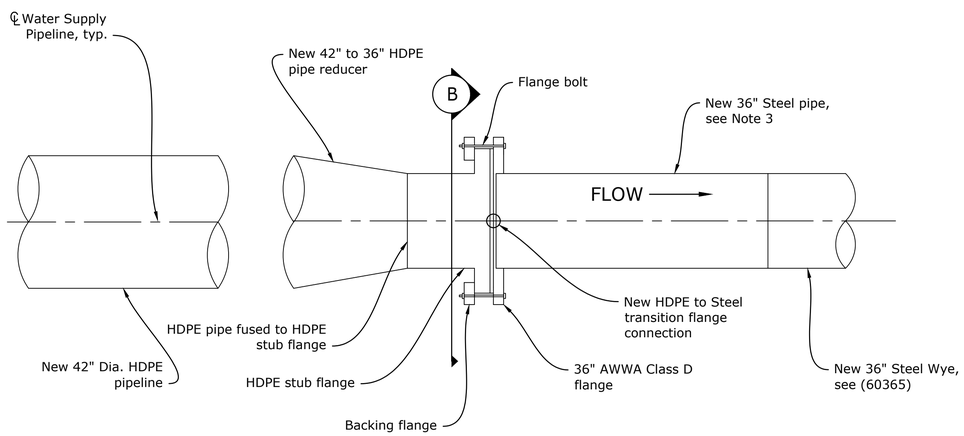

PARTIAL PLAN VIEW - HDPE FLANGE TO STEEL FLANGE CONNECTION

NOT TO SCALE

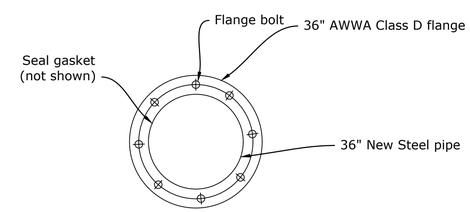

B SECTION - NEW HDPE FLANGE TO STEEL FLANGE CONNECTION

NOT TO SCALE

NOTES

1. Contractor shall field verify all dimensions prior to fabrication and installation of components.
2. Pipe connections shall be designed by Contractor and submitted for approval in accordance with the Specifications.
3. Connection near Station 48+00.00 is existing CCP to new 42DR41 HDPE pipe. Connection near Station 65+48.00 is new 42DR41 HDPE pipe reducer to new Steel pipe, see (60347) & (60348).
4. Pipe walls not shown for clarity.

RECLAMATION
Managing Water in the West

ALWAYS THINK SAFETY

U.S. DEPARTMENT OF THE INTERIOR
BUREAU OF RECLAMATION
COLUMBIA BASIN PROJECT
GRAVITY DIVISION

LEAVENWORTH STATION – FISH HATCHERY
EXISTING WATER SUPPLY PIPELINE REHABILITATION

REV NO	DATE	
1	2025-12-10	D REISSUED UNDER NEW CONTRACT.

J. LORBERAU
DESIGNED
P. APPIAH
DRAWN
K. PELZER
CHECKED
J. LORBERAU P.E.
TECH. APPR.
WYLIE DUKE
APPROVED
PEER REVIEWER - MANAGER, WATER CONVEYANCE GROUP

DENVER, CO 2020-12-11

PIPE CONNECTIONS

PARTIAL PLANS AND SECTIONS

222-D-60351

SHEET 1

LAST SAVED DATE 2025-12-11
LAST SAVED BY MHEKMATI

CAD SYSTEM AutoCAD 25.0b
CAD FILENAME 222-D-60351-RD-1.DWG

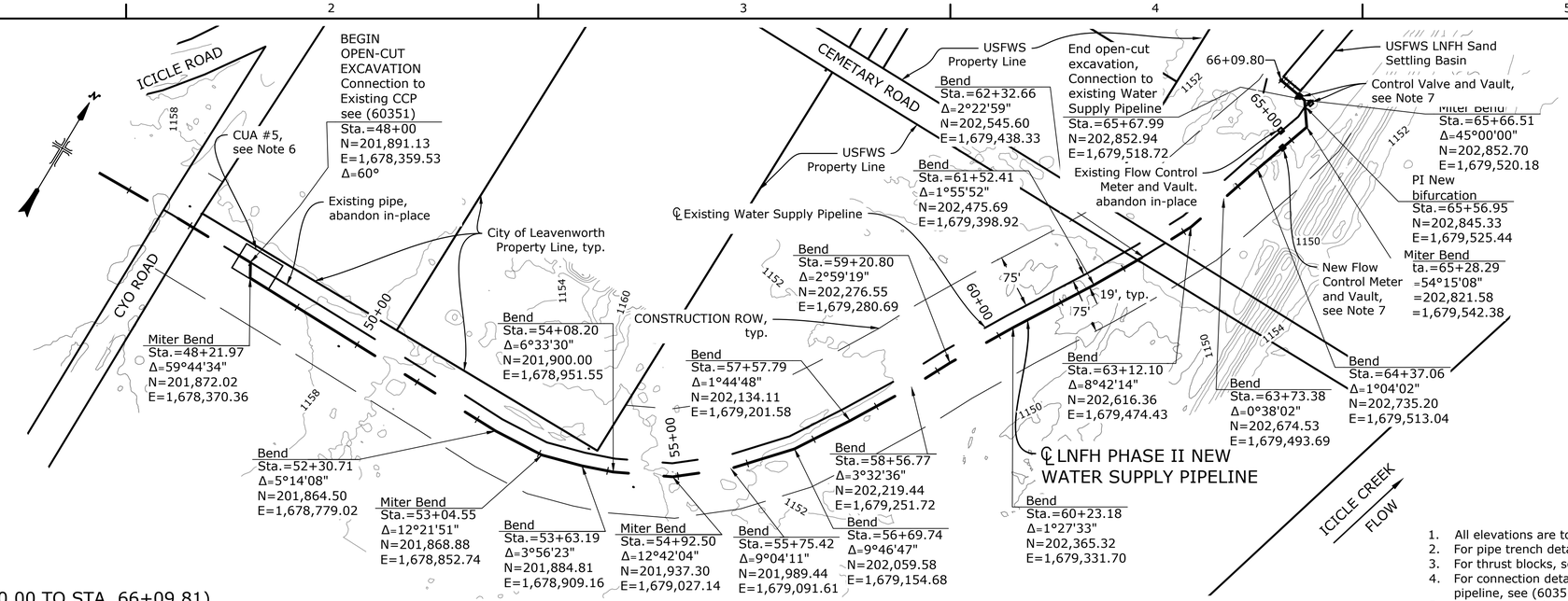

PARTIAL PLAN (STA. 48+00.00 TO STA. 66+09.81)

0 100' 200'

NOTES

1. All elevations are to centerline of pipeline.
2. For pipe trench details, see (60355) & (60356).
3. For thrust blocks, see (60357) and Specifications.
4. For connection details to existing water supply pipeline, see (60351).
5. Open-cut trench excavation and pipe replacement from Sta. 48+00.00 to Sta. 65+68.00 parallel to existing pipe alignment.
6. Public access to the existing asphalt surfaced parking lot from Cyo Road shall be maintained around Contractor Use Area #5 at all times. All necessary safety devices, signage, traffic controls, or other features to protect the general public shall be installed and maintained to the satisfaction of the COR.
7. For Vaults, see (60360) & (60361).

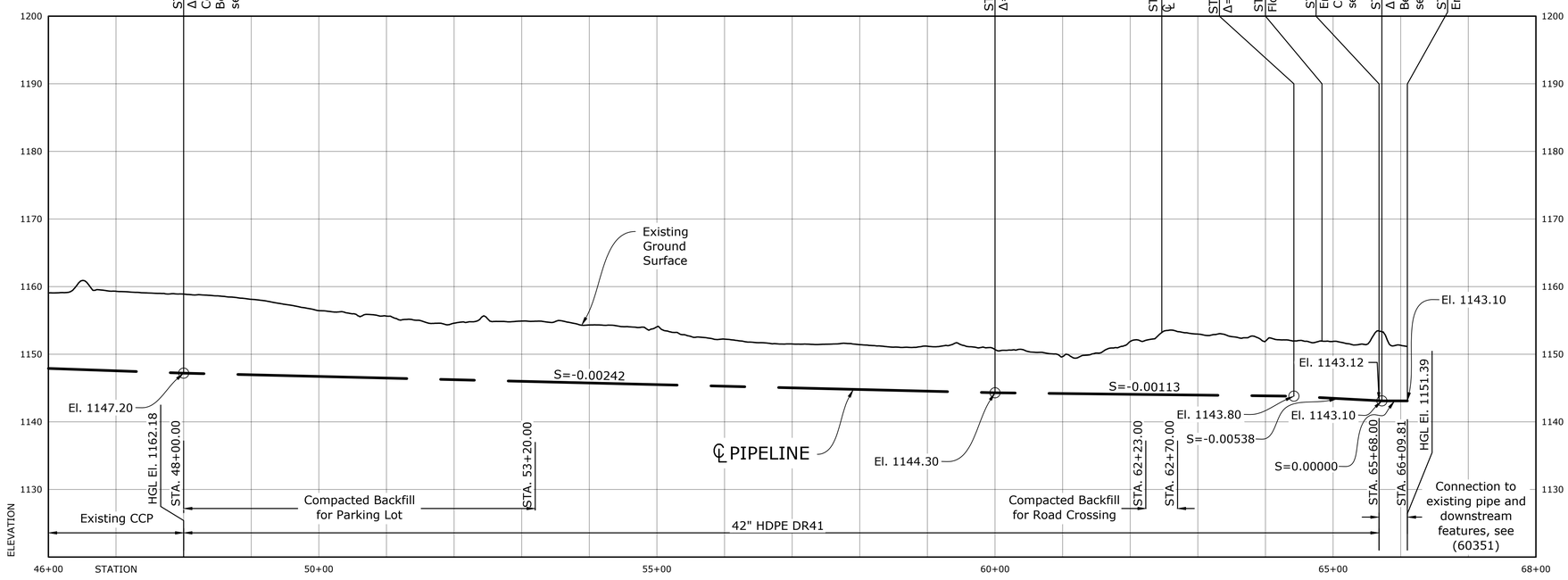

PROFILE

Note: Vertical scale exaggerated 10x for clarity

RECLAMATION
Managing Water in the West

ALWAYS THINK SAFETY

U.S. DEPARTMENT OF THE INTERIOR
BUREAU OF RECLAMATION
COLUMBIA BASIN PROJECT
GRAVITY DIVISION

LEAVENWORTH STATION – FISH HATCHERY
EXISTING WATER SUPPLY PIPELINE REHABILITATION

REV NO	DATE	
1	2025-12-10	D REISSUED UNDER NEW CONTRACT.

K. PELZER
DESIGNED
P. APPIAH
DRAWN
J. LORBERAU
CHECKED
K. PELZER P.E.
TECH. APPR.
WYLIE DUKE
APPROVED
PEER REVIEWER -MANAGER, WATER CONVEYANCE GROUP

DENVER, CO 2020-12-11

PLAN AND PROFILE

STA. 48+00.00
TO
STA. 66+09.81

222-D-60354

SHEET 1

LAST SAVED DATE 2025-12-11
LAST SAVED BY MHEKMATI

CAD SYSTEM AutoCAD 25.0b
CAD FILENAME 222-D-60354-RD-1.DWG

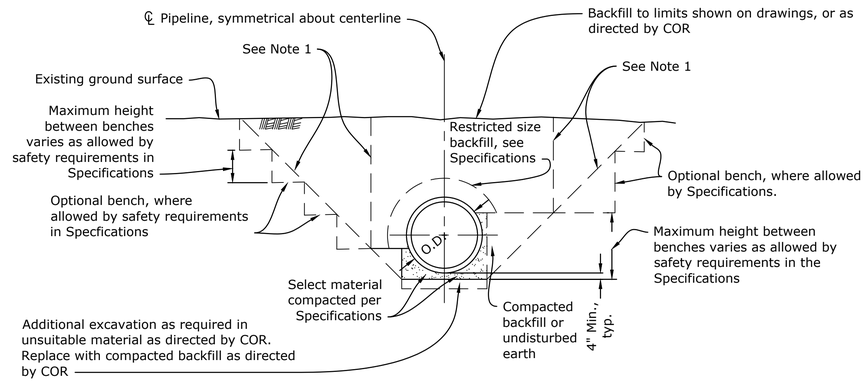

C TYPICAL SECTION - PIPELINE TRENCH

NOT TO SCALE

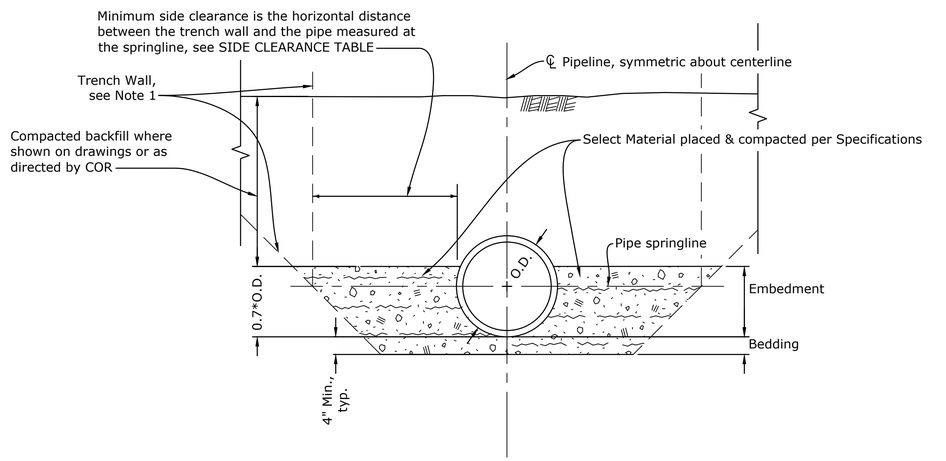

D TYPICAL SECTION - PIPELINE INSTALLATION TRENCH

NOT TO SCALE

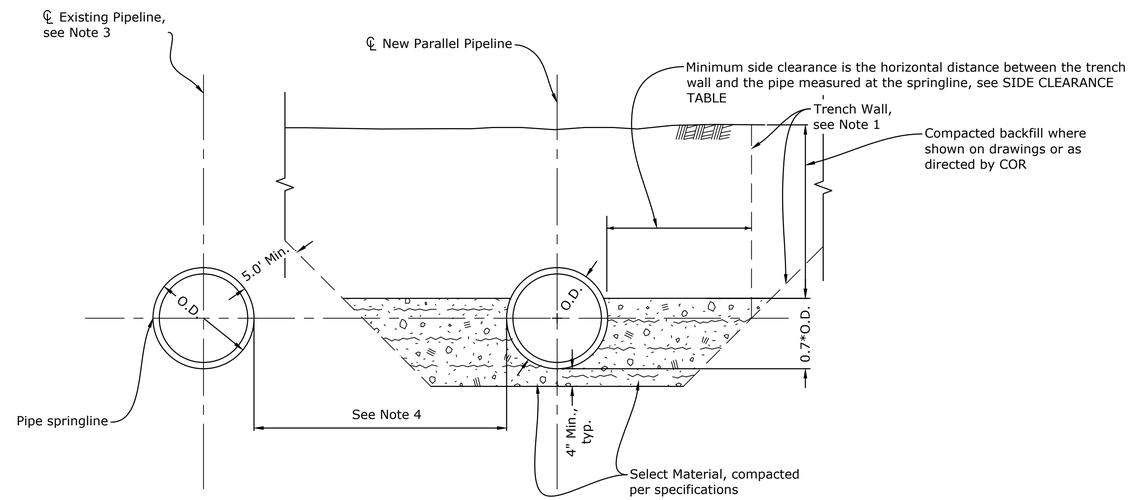

E TYPICAL SECTION - PARALLEL PIPELINE INSTALLATION TRENCH

NOT TO SCALE

SIDE CLEARANCE TABLE
Minimum Side Clearance
ONE O.D.

NOTES

1. Slope or shore as required for safety in accordance with Specifications.
2. Warning tape and tracer wire not shown for HDPE pipe types, but are required. See Specifications for details.
3. Existing pipeline shall have continuous flow, except during Low-Flow Work Period. See Specifications.
4. Minimum distance between pipes as shown on (60354).
5. Parallel pipes may not be on the same springline elevation even though it is drawn as such.
6. Side clearance measurement is at pipe springline.

RECLAMATION
Managing Water in the West

ALWAYS THINK SAFETY

U.S. DEPARTMENT OF THE INTERIOR
BUREAU OF RECLAMATION
COLUMBIA BASIN PROJECT
GRAVITY DIVISION

LEAVENWORTH STATION – FISH HATCHERY
EXISTING WATER SUPPLY PIPELINE REHABILITATION

REV-NO	DATE		
1	2025-12-10	D	REISSUED UNDER NEW CONTRACT.

K. PELZER
DESIGNED
P. APPIAH
DRAWN
J. LORBERAU
CHECKED
K. PELZER, P.E.
TECH. APPR.
W. DUKE
APPROVED
PEER REVIEWER - MANAGER, WATER CONVEYANCE GROUP
DENVER, CO 2020-12-11

SELECT MATERIAL PIPE TRENCHES

TYPICAL SECTIONS

222-D-60355

SHEET 1

LAST SAVED DATE 2025-12-11
LAST SAVED BY MHIEKMATI

CAD SYSTEM Auto-CAD 25.0b
CAD FILENAME 222-D-60355-RD-1.DWG

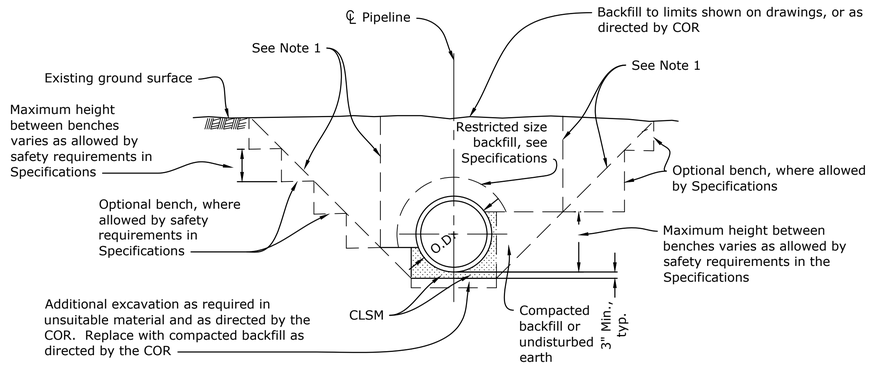

F TYPICAL SECTION - PIPELINE TRENCH

NOT TO SCALE

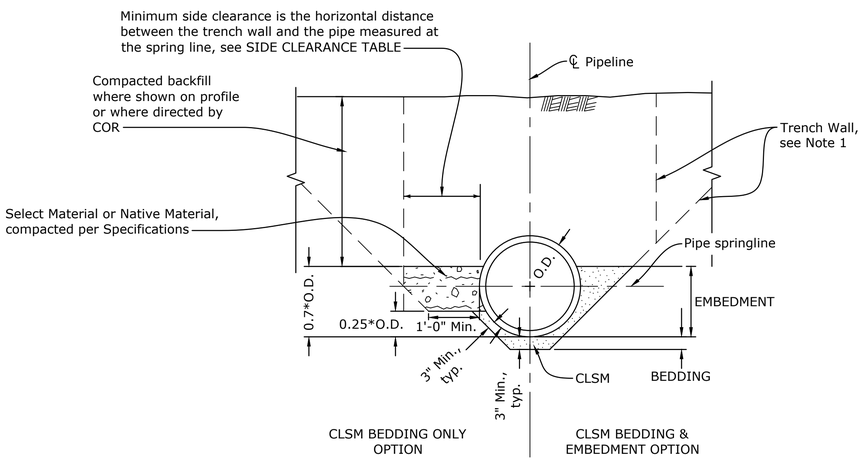

G TYPICAL SECTION - PIPE INSTALLATION CLSM TRENCH

NOT TO SCALE

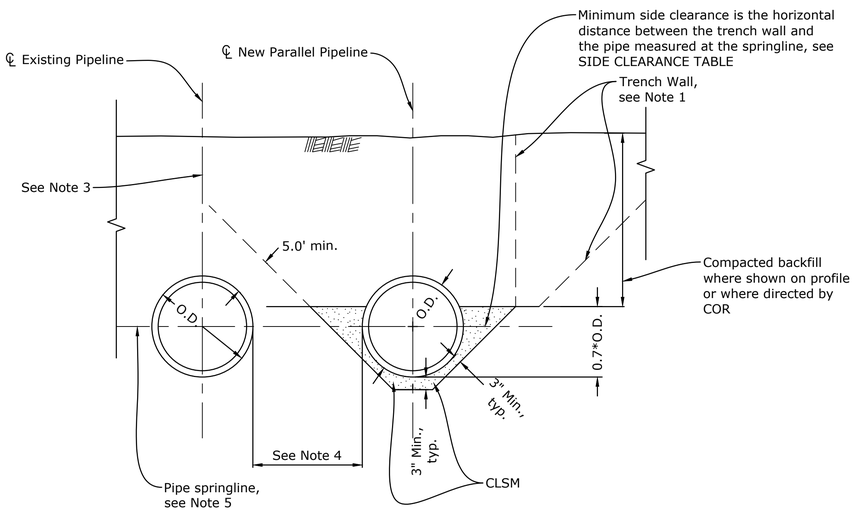

H TYPICAL SECTION - PARALLEL PIPE INSTALLATION TRENCH CLSM OPTION

NOT TO SCALE

SIDE CLEARANCE TABLE
Minimum Side Clearance (Inches)
12"

NOTES

1. Slope or shore as required for safety, in accordance with specifications.
2. Warning tape and tracer wire not shown for HDPE pipe, but are required. See specifications for details.
3. Existing pipeline shall have continuous flow, except during Low-Flow Work Period. See Specifications.
4. Minimum distance between pipes as shown on (60354).
5. Parallel pipes may not be on the same springline even though it is drawn as such.
6. For Pipe Supports, see (40-D-6552).
7. Side clearance measurement is at pipe springline.

RECLAMATION
Managing Water in the West

ALWAYS THINK SAFETY

U.S. DEPARTMENT OF THE INTERIOR
BUREAU OF RECLAMATION
COLUMBIA BASIN PROJECT
GRAVITY DIVISION

LEAVENWORTH STATION – FISH HATCHERY
EXISTING WATER SUPPLY PIPELINE REHABILITATION

REV NO		
1	2025-12-10	D REISSUED UNDER NEW CONTRACT.

K. PELZER
DESIGNED
P. APPIAH
DRAWN
J. LORBERAU
CHECKED
K. PELZER P.E.
TECH. APPR.
WYLTE DUKE
APPROVED
PEER REVIEWER • MANAGER, WATER CONVEYANCE GROUP

DENVER, CO 2020-12-11

CLSM PIPE TRENCHES

TYPICAL SECTIONS

222-D-60356

SHEET 1

LAST SAVED DATE 2025-12-11 LAST SAVED BY MHEKMATI

CAD SYSTEM AutoCAD 25.0s CAD FILENAME 222-D-60356-RD-1.DWG

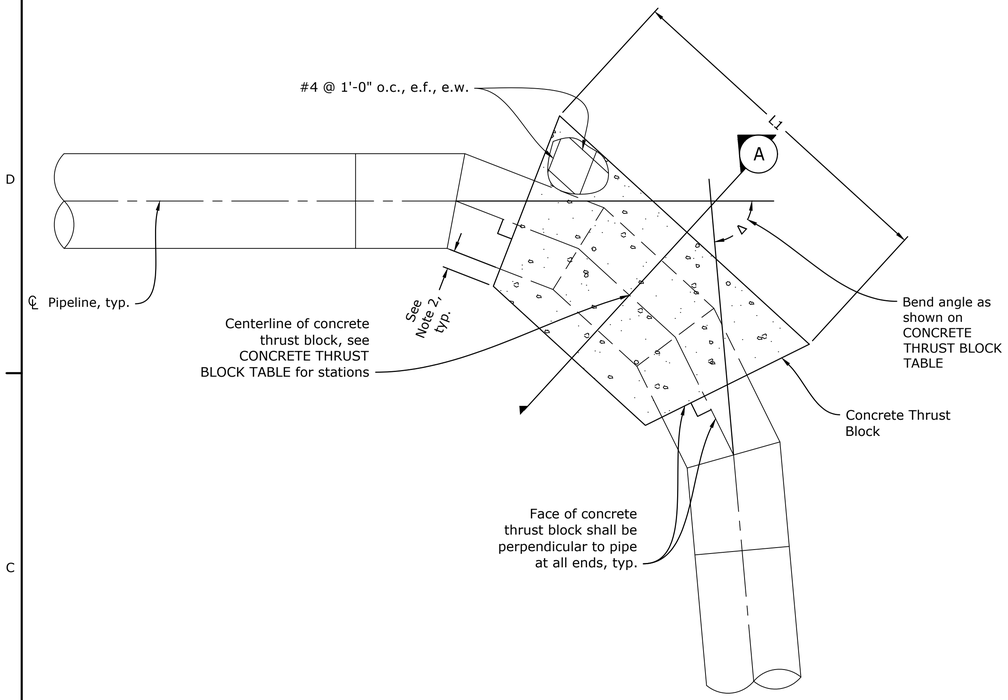

PARTIAL PLAN VIEW - CONCRETE THRUST BLOCK

NOT TO SCALE

CONCRETE THRUST BLOCK TABLE					
STATION	Δ (Deg.)	Dia. (FT)	L1 (FT)	W (FT)	H (FT)
48+00.00	60	3'-6"	4'-6"	5'-0"	4'-6"
48+21.97	60	3'-6"	4'-6"	5'-0"	5'-6"
53+04.55	12d21'51"	3'-6"	2'-6"	5'-0"	4'-6"
54+92.50	13d42'4"	3'-6"	2'-6"	5'-0"	4'-6"
65+28.30	60	3'-6"	4'-6"	5'-0"	5'-6"
65+56.95 (WYE)	60	3'-6"	8'-0"	5'-0"	4'-6"

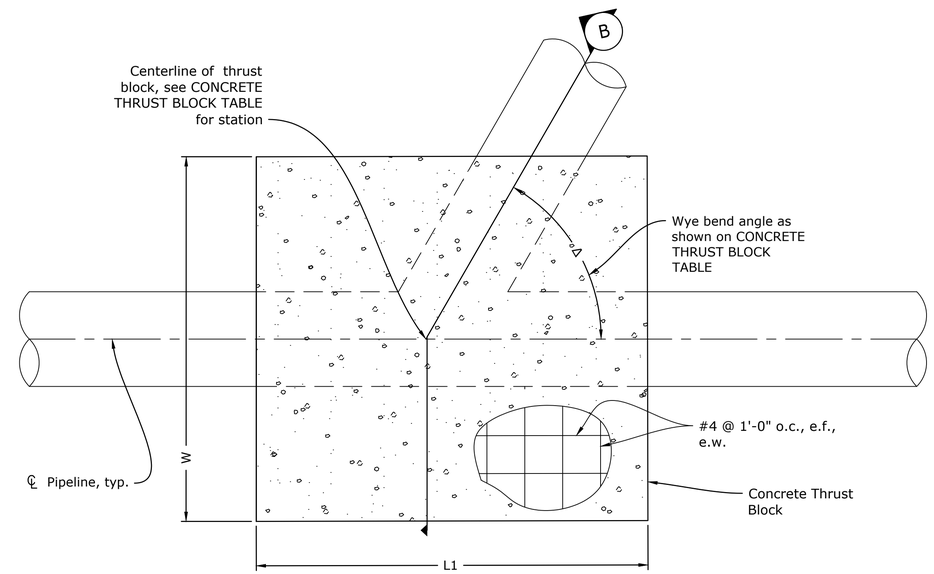

PARTIAL PLAN VIEW - CONCRETE THRUST BLOCK WYE

NOT TO SCALE

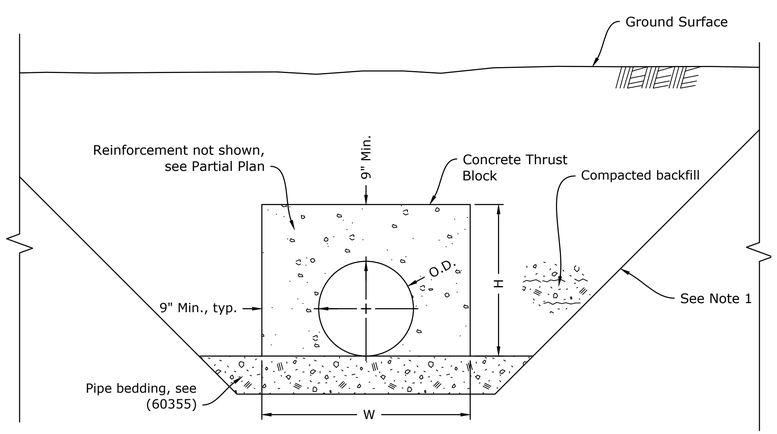

J TYPICAL SECTION - CONCRETE THRUST BLOCK, BEND

NOT TO SCALE

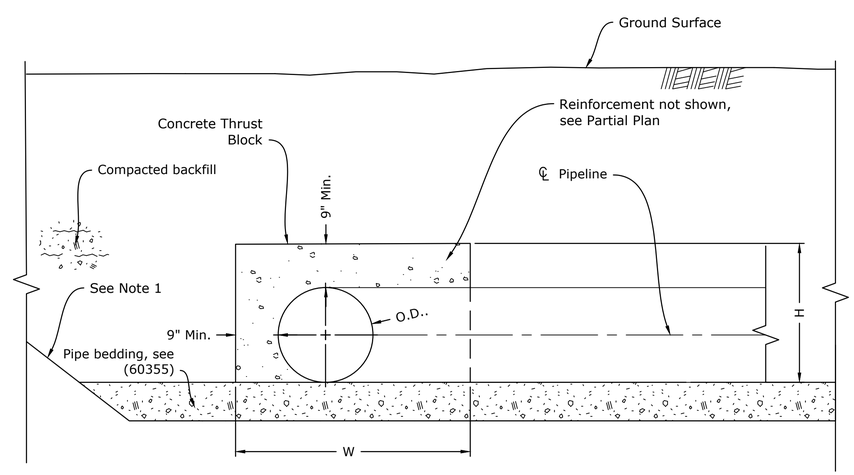

K TYPICAL SECTION - CONCRETE THRUST BLOCK, WYE

NOT TO SCALE

NOTES

1. Concrete thrust blocks may be flush with the bottom of pipe or invert of trench, and shall fully encapsulate the pipe on all sides and top by 9 inches minimum.
2. Thrust blocks only required in select material pipe trench installations. Thrust blocks are not required in CLSM pipe trench installations.
3. See CONCRETE THRUST BLOCK TABLE for dimensions.

RECLAMATION
Managing Water in the West

ALWAYS THINK SAFETY

U.S. DEPARTMENT OF THE INTERIOR
BUREAU OF RECLAMATION
COLUMBIA BASIN PROJECT
GRAVITY DIVISION

LEAVENWORTH STATION – FISH HATCHERY
EXISTING WATER SUPPLY PIPELINE REHABILITATION

REV NO	DATE		
1	2025-12-11	D	REISSUED UNDER NEW CONTRACT.

J. LORBERAU
DESIGNED
P. APPIAH
DRAWN
K. PELZER
CHECKED
J. LORBERAU
TECH. APPR.
WYLIE DUKE
APPROVED
PEER REVIEWER - MANAGER, WATER CONVEYANCE GROUP

DENVER, CO 2020-12-11

CONCRETE THRUST BLOCK

PARTIAL PLAN AND TYPICAL SECTIONS

222-D-60357

SHEET 1

LAST SAVED DATE 2025-12-10 LAST SAVED BY MHEKMATI

CAD SYSTEM AutoCAD 25.0s CAD FILENAME 222-D-60357-RD-1.DWG

DESIGN CRITERIA

BASIC LOAD COMBINATIONS

LOAD COMBINATIONS USING STRENGTH DESIGN OR LOAD RESISTANCE FACTOR DESIGN (LRFD)

U = 1.4(D + F)
U = 1.2(D + F) + 1.6(L) + 1.6(H) + 0.5(L_r or S or R)
U = 1.2(D + F) + 1.6(L_r or S or R) + 1.6(H) + (L or 0.5W)
U = 1.2(D + F) + 1.6(H) + 1.0W + L + + 0.5(Lr or S or R)
U = 1.2D + 1.6(H) + 1.0E + L + 0.2S
U = 0.9D + 1.6(H) + 1.0W
U = 0.9D + 1.6(H) + 1.0E

NOTES:
1. For symbols and notation refer to ASCE 7-16, Section 2.2.
2. Refer to ACI 318-19 Section 5.3, IBC 2018, Section 1605, and ASCE 7-16, Section 2.3 for load combinations.
3. Omit roof live loads (L_r), snow loads (S), or wind loads (W) where or when they do not occur.
4. Include fluid weight or pressure loads (F) or lateral earth pressure loads (H) when they occur.
5. Earthquake load (E) for the substructure consists of the pseudo static lateral force produced by applying the peak horizontal ground acceleration to the mass of the structure.
6. The value of H to be used in combination with E for the substructure consists of the earthquake loads from backfill and water that are applied to the substructure. Refer to Bureau of Reclamation publication, "Design Criteria for Concrete Retaining Walls - 1977".
7. Earthquake load (E) shown in these equations developed using IBC 2018, Section 1613.

GENERAL DESIGN STANDARDS

DESIGN STANDARDS

- International Building Code (IBC) 2018.
- American Society of Civil Engineers (ASCE) 7-16, "Minimum Design Loads for Buildings and Other Structures".

REINFORCED CONCRETE DESIGN

DESIGN STANDARDS

- American Concrete Institute (ACI) 318-19, "Building Code Requirements or Structural Concrete".
- Bureau of Reclamation Design Standards No. 9, "Buildings and Other Structures".
- Bureau of Reclamation "Design Criteria for Concrete Retaining Walls", 1977.

DESIGN METHOD

Strength Design

MATERIALS

CONCRETE - 28 day compressive strength (f'_c) = 4,500 lb/in^2
REINFORCEMENT - Minimum yield strength (f_y) = 60,000 lb/in^2

MINIMUM SHRINKAGE AND TEMPERATURE REINFORCEMENT

Building foundation and other structures---------- 0.003

Shrinkage and temperature reinforcement shall be spaced not farther apart than five times the slab thickness, nor farther apart than 18 in.

STRUCTURAL STEEL DESIGN

DESIGN STANDARDS

- American Institute of Steel Construction (AISC) 325-18, "Steel Construction Manual, Fifteenth Edition".

DESIGN METHOD

Load Resistance Factor Design (LRFD)

MATERIALS

STRUCTURAL STEEL
ASTM A36 - Minimum yield strength (f_y) = 36,000 lb/in^2
ASTM A992 - Minimum yield strength (f_y) = 50,000 lb/in^2

GEOTECHNICAL DESIGN

All geotech data is estimated.

Allowable Bearing Capacity: 4,000 lb/ft^2
Modulus of subgrade reaction: 173 lb/in^3
At rest earth pressure coefficient (K_o): 0.500
Active earth pressure coefficient (K_a): 0.301
Passive earth pressure coefficient (K_p): 3

LOAD DESIGNATIONS AND EXPLANATIONS

(D) DEAD LOADS

Concrete ---------- 150 lb/ft^3
Vertical earth loads
Dry ---------- 135 lb/ft^3
Saturated ---------- 145 lb/ft^3
Vertical water loads ---------- 62.4 lb/ft^3
Structural Steel ---------- 490 lb/ft^3

(L) FLOOR LIVE LOADS

Walkways ---------- 300 lb/ft^2
Building Load (around perimter of vault) ---------- 150 lb/ft

(L_r) ROOF LIVE LOADS

Apply in accordance with IBC 2012, Section 1607 and ASCE 7-16, Chapter 4.

There is no roof loading for vault. USFW will place building on top of vault after vault is constructed. A snow load was assumed for the building roof using the ground snow load for the area.

(F) FLUID LOADS

Includes all situations where horizontal water loads may exist and corresponding uplift pressures where applicable.

Water Pressure ---------- 62.4 lb/ft^2/ft

Maximum water surface: El. 1151 ft (Field verify)

(S) SNOW LOADS

Apply in accordance with IBC 2018, Section 1608 and ASCE 7-16, Chapter 7.

Snow Importance Factor (I_s) = 1.00
Exposure Factor (C_e) = 0.9
Thermal Factor (C_t) = 1.2
Ground Snow Load (p_g) = 20 psf
Flat Roof Snow Load (p_f) = 0 psf

(W) WIND LOADS

Apply in accordance with IBC 2018, Section 1609 and ASCE 7-16, Chapter 26.

Risk category: II
Wind importance factor (I_w): 1.00
Basic wind speed (3-second gust): 115 mph
Wind Exposure Category: C
Internal Pressure Coefficient: GC_{pi} = 0.00

(T) TEMPERATURE VARIATIONS

All members above grade: ---------- ±50° F
All members below grade: ---------- ±20° F

(H) LATERAL EARTH PRESSURES

Active Pressures
Dry ---------- 40.6 lb/ft^2/ft
Saturated ---------- 43.6 lb/ft^2/ft
At Rest Pressures
Dry ---------- 67.5 lb/ft^2/ft
Saturated ---------- 72.5 lb/ft^2/ft

Note:
A surcharge equal to an additional 2 feet of dry earth is added where localized equipment loads can cause an increase in lateral earth pressures.

HYDRAULIC EQUIPMENT

Gate Valve Equipment ---------- 5,000 lbs/ea.
Steel Pipe Pressure Head ---------- 58 ft

(E) SEISMIC LOADS

The seismic lateral earth pressures for below grade structures are based on ASCE 7-18, Chapter 11. Having a 2% chance of exceedance in 50 years (return period of 2,475 years). Seismic loads from backfill and water are applied in accordance with the Bureau of Reclamation publication, "Design Criteria for Concrete Retaining Walls - 1977"

Design Parameters (ASCE 7-16, Chapter 11)
Mapped peak ground acceleration:
PGA = 0.240g
Peak ground acceleration adjusted for Site Class effect:
PGA_M = 0.326g
Design peak ground acceleration:
PGA = 0.240g

The seismic analysis and design of structures above grade are based on IBC 2018, Section 1613 and ASCE 7-16, Chapter 11, and the Design Response Spectrum shown below. Having a 1% chance of collapse in 50 years (return period of 4,975 years).

Design Parameters (IBC 2018, Section 1613 and ASCE 7-16, Chapter 11)
Risk category: I
Seismic importance factor (I_e): 1.00
Site class: D
Mapped spectral response coefficients:
S_s = 0.548, S_1 = 0.217g
Spectral response coefficient adjust for Site Class effects:
S_{MS} = 0.747g, S_{M1} = 0.326g
Design spectral response coefficients:
S_{DS} = 0.498g , S_{D1} = 0.217g
Seismic design category: D

DESIGN RESPONSE SPECTRUM

Risk-Targeted Maximum Considered Earthquake (5% Damped)

Latitude: 47.555891°N, Longitude: 120.675020°W

STABILITY ANALYSIS CRITERIA

- Stability analysis include construction and completed conditions
- Vertical loads consist of structure dead loads, stationary equipment loads, hydrostatic and backfill loads, and uplift pressure.
- Horizontal loads consist of hydrostatic loads, lateral backfill pressures, surcharge loads, hydraulic thrusts, wind, and earthquake forces.
- Water does not penetrate construction joints in concrete

MINIMUM FACTOR OF SAFETY	USUAL	UNUSUAL	EXTREME
Overturning	1.5	1.33	1.1
Shear - Friction	1.5	1.33	1.1
Flotation	1.5	1.25	1.1

Note:
Usual
Includes live loads and lateral earth pressures
Unusual
Includes usual loading as well as surcharge and construction loading
Extreme
Includes usual loading and seismic loading for overturning and shear - friction
Includes maximum water surface elevation for flotation

BUREAU OF RECLAMATION

ALWAYS THINK SAFETY

U.S. DEPARTMENT OF THE INTERIOR
BUREAU OF RECLAMATION
COLUMBIA BASIN PROJECT
GRAVITY DIVISION

LEAVENWORTH STATION - FISH HATCHERY
EXISTING WATER SUPPLY PIPELINE REHABILITATION

REV NO	STA.	2025-11-21	Revised titleblocks, references, callouts, and plan view to include multiple vaults
1	D	Clark Larsen, P.E.	

CLARK E LARSEN
DESIGNED
CLARK E LARSEN
DRAWN
JON MULLIGAN
CHECKED
CLARK LARSEN, P.E.
TECH. APPR. CLARK LARSEN, P.E.
JASON WAGNER, P.E.
APPROVED JASON WAGNER, P.E.
Peer Reviewer - Civil Structures Group

DENVER, CO 12/11/2020

VAULTS

STRUCTURAL DESIGN DATA - GENERAL

222-D-60359

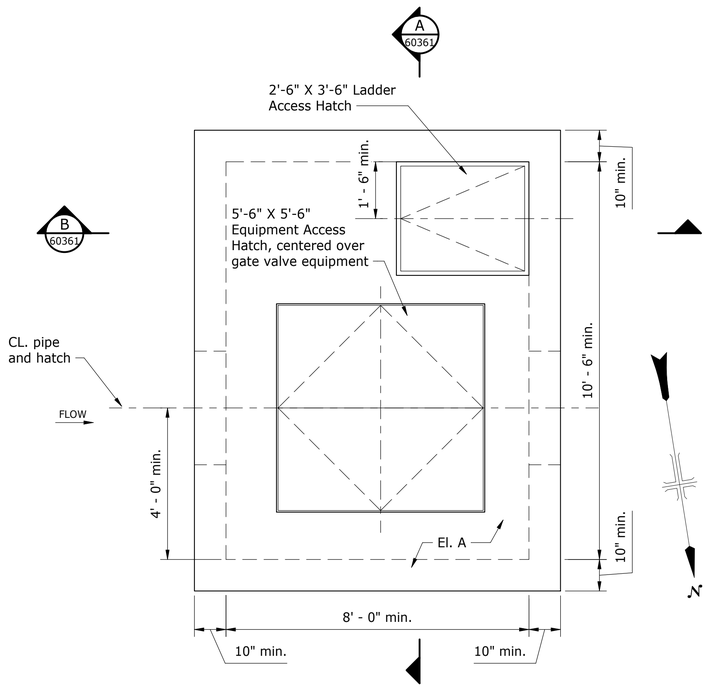

PLAN AT EL. A

Scale: 1/2" = 1'-0"

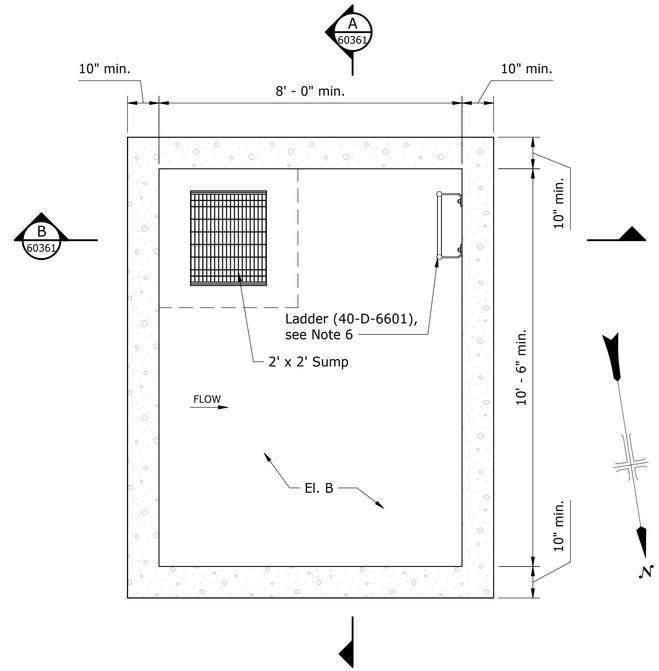

PLAN AT EL. B

Scale: 1/2" = 1'-0"

SITE PLAN

Scale: Not to Scale

CONCRETE OUTLINE AND REINFORCEMENT GENERAL NOTES

Not all embedded items are shown on the outline drawings.

Before placing concrete on grade, ensure all buried items below the concrete are in place, and foundation treatment has been completed.

Chamfer all permanently exposed concrete edges 3/4" with a 45-deg bevel unless otherwise noted on the drawings.

For details on the method of building forms for successive lifts, see 40-D-5246.

For construction joint, contraction joint and expansion joint details, see 40-D-5247.

For general notes and minimum requirements for detailing reinforcement, see 40-D-60003 and 60004.

Dimensions to reinforcement are to the center of bars.

Dimensions and elevations not shown are the same for identical details shown elsewhere on the drawings.

REFERENCE DRAWINGS

Key, Location, & Vicinity Map..... 222-D-60346
Vault Concrete Outline Sections..... 222-D-60361
Vault Sump Pit Cover.....222-D-60363
Pipe Alignment Plan and Profile..... 222-D-60354
Typical Pipe and Trench Sections..... 222-D-60355 and 60356
Mechanical Equipment in Vault..... 222-D-60365 through 60367
Electrical Equipment in Vault..... 222-D-60369 and 60370

ABBREVIATIONS

CL.	Centerline
Dim.	Dimension
El.	Elevation
I.D.	Inner Diameter
Max.	Maximum
Min.	Minimum
O.D.	Outer Diameter
S	Slope
Sta.	Station
Typ.	Typical
60XXX	Referenced Project Drawing Number

	Elevation (ft)*	
Location	**Control Valve Vault**	**Flowmeter Vault**
El. A	1155.83	1154.75
El. B	1141.00	1140.00

*See Note 4

NOTES

1. Pipe excavation not shown.
2. Not all miscellaneous metalwork, mechanical equipment, and/or electrical equipment are shown on this drawing. See reference drawings above for locations.
3. To seal pipe annulus, see specification sections.
4. Elevations are approximate. Field verify elevations
5. Verify vault locations with COR prior to placement.
6. Locate ladder in center of clear opening of ladder access hatch.
7. Contractor required to determine actual size and spacing of rebar needed for structure. But use a minimum of #5@1'-0" each way, each face for reinforcement.
8. Building on top of each vault not shown. See Specifications for details.

0 1' 2' 4'
Scale: 1/2" = 1'-0"

BUREAU OF RECLAMATION

ALWAYS THINK **SAFETY**

U.S. DEPARTMENT OF THE INTERIOR
BUREAU OF RECLAMATION
COLUMBIA BASIN PROJECT
GRAVITY DIVISION

LEAVENWORTH STATION - FISH HATCHERY
EXISTING WATER SUPPLY PIPELINE REHABILITATION

REV NO	STA.	DATE	DESCRIPTION
1	D	2025-11-21 Clark Larsen, P.E.	Revised titleblocks, references, callouts, and plan view to include multiple vaults

CLARK LARSEN
DESIGNED
CLARK LARSEN
DRAWN
JON MULLIGAN
CHECKED
CLARK LARSEN, P.E.
TECH. APPR. CLARK LARSEN, P.E.
JASON WAGNER, P.E.
APPROVED JASON WAGNER, P.E.
Peer Reviewer - Civil Structures Group

DENVER, CO 12/11/2020

VAULTS

PLANS AND GENERAL NOTES

222-D-60360

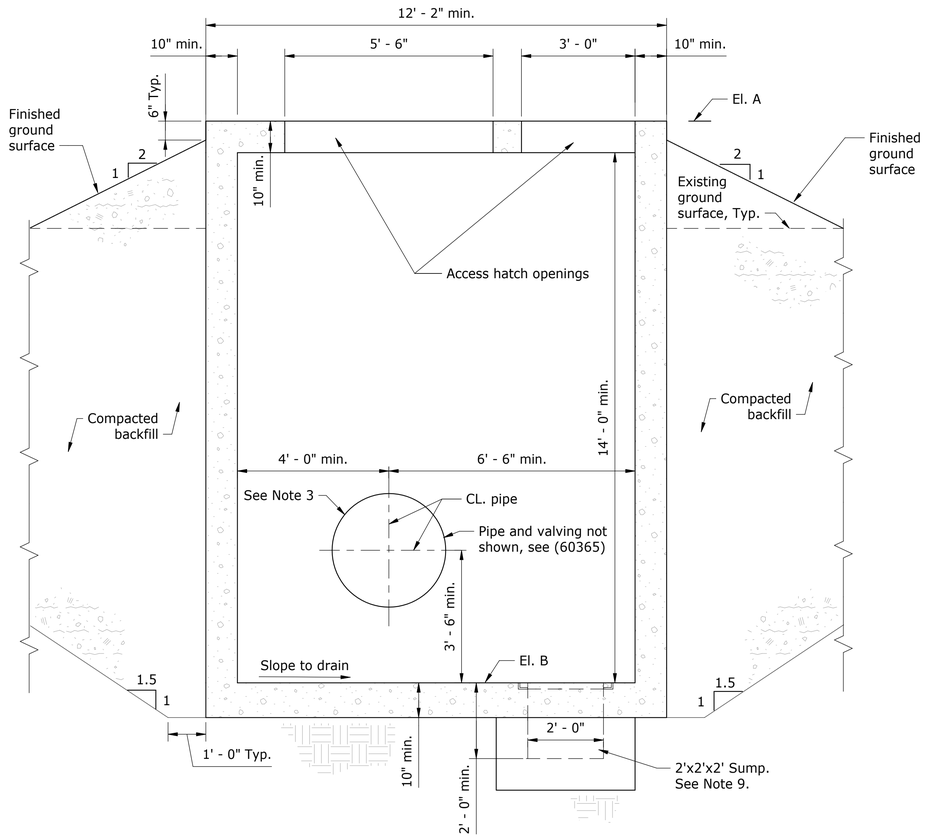

A 60360 SECTION
Scale: 1/2" = 1'-0"

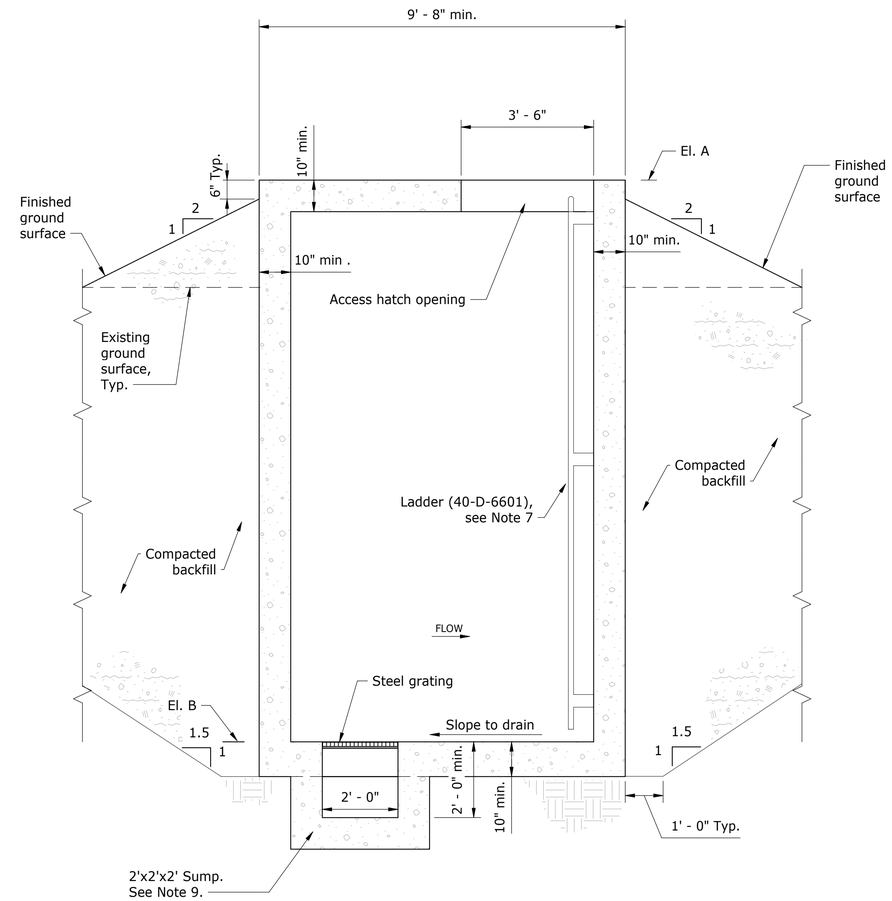

B 60360 SECTION
Scale: 1/2" = 1'-0"

NOTES

1. Pipe excavation not shown.
2. Not all miscellaneous metalwork, mechanical equipment, and/or electrical equipment are shown on this drawing.
3. To seal pipe annulus, see respective specification sections.
4. See (60360) for elevation table. Elevations are approximate. Field verify elevations.
5. Add extra fill or change slope of backfill based on actual elevations, as directed by COR.
6. When compacting within 3 horizontal feet of structures, use special compaction as listed in specifications.
7. Locate ladder in center of clear opening of ladder access hatch.
8. Contractor required to determine actual size and spacing of rebar needed for structure. But use a minimum of #5@1'-0" each way, each face for reinforcement.
9. For vault sump pit, see (60363).
10. Building on top of each vault not shown. See Specifications for details.

0 1' 2' 4'
Scale: 1/2" = 1'-0"

BUREAU OF RECLAMATION

ALWAYS THINK **SAFETY**

U.S. DEPARTMENT OF THE INTERIOR
BUREAU OF RECLAMATION
COLUMBIA BASIN PROJECT
GRAVITY DIVISION

LEAVENWORTH STATION - FISH HATCHERY
EXISTING WATER SUPPLY PIPELINE REHABILITATION

REV NO	STA.	2025-11-21	Revised titleblocks, references, callouts, and plan view to include multiple vaults
1	D	Clark Larsen, P.E.	

CLARK LARSEN
DESIGNED
CLARK LARSEN
DRAWN
JON MULLIGAN
CHECKED
CLARK LARSEN, P.E.
TECH. APPR. CLARK LARSEN, P.E.
JASON WAGNER, P.E.
APPROVED JASON WAGNER, P.E.
Peer Reviewer - Civil Structures Group

DENVER, CO 12/11/2020

VAULTS

SECTIONS

222-D-60361

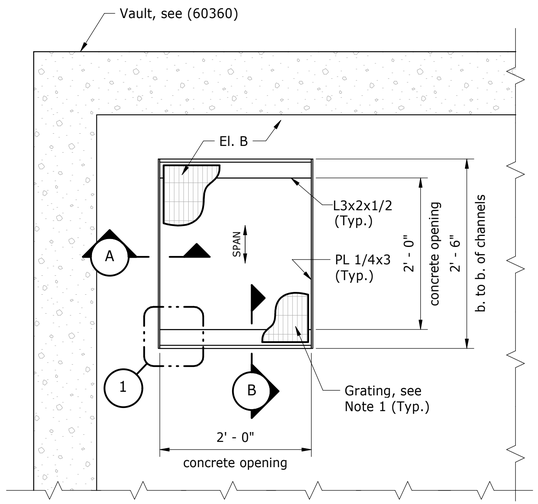

TYPICAL VAULT SUMP COVER - PLAN

Scale: 1" = 1'-0"

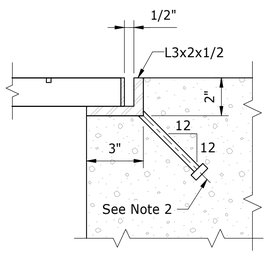

B SECTION

Scale: 3" = 1'-0"

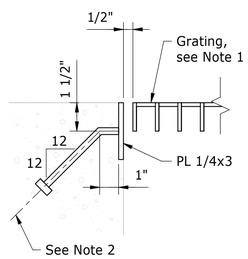

A SECTION

Scale: 3" = 1'-0"

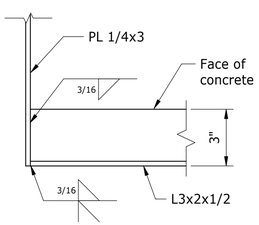

1 DETAIL

Scale: 3" = 1'-0"

MISCELLANEOUS METALWORK GENERAL NOTES

All material is steel unless noted otherwise.

Galvanize all ferrous metalwork after fabrication unless noted otherwise. Provide vent holes in pipe as required for galvanizing.

Details, welds, and other connections shown are typical for all similar conditions.

Dimensions shown are typical for similar details.

Contractor field verifies locations and dimensions of new or existing structures prior to the fabrication of miscellaneous metalwork. Grout underneath or behind the plates as required to ensure that landings and supports are level and installed at elevations shown on drawings.

Structural Steel ASTM Specifications shall be as noted:
Angles and Channels---------- A36
All other shapes, plates, or bars----------A36

Fastener ASTM Specifications shall be as noted:
Bolts----------Group A (A325-N)

All structural bolts to include heavy hex nut and hardened washer.

All bolted connection bolt holes are standard 1/16" oversize unless noted otherwise.

Arc-Welding Electrodes: Filler metal and required shielding gases or fluxes shall be per AWS D1.1 and AWS D1.6, with filler metal for steel having a minimum tensile strength of 70,000 psi.

Ensure grating panels are banded and bear fully on supports.

Design live load for grating and supports is 100 pounds per square foot unless noted otherwise.

ASTM - denotes American Society for Testing and Materials.

AWS - denotes American Welding Society.

PL/Pl. - denotes plate.

TYP. - denotes typical.

CL. - denotes centerline.

b. to b. - denoted back to back.

NOTES

1. Provide serrated steel grating with bearing bars 1 1/2" x 3/16" @ 1-3/16" on centers. Cross bars @ 4" on centers. Banding bars same size as bearing bars. Provide grating in panel widths not to exeed 3'-0". Allow 1/2" max. gaps between panels and 1" max. gaps between panels and mechanical equipment. Fasten each grating panel with 4 std. saddle clips and 1/4" dia. threaded stud bolts with hex. nuts and std. washers.
2. CL. 3/8" ø x 4" Headed concrete anchor @ 1'-0" on centers.

0 1' 2'
Scale: 1" = 1'-0"

0 3" 6" 9"
Scale: 3" = 1'-0"

BUREAU OF RECLAMATION

ALWAYS THINK **SAFETY**

U.S. DEPARTMENT OF THE INTERIOR
BUREAU OF RECLAMATION
COLUMBIA BASIN PROJECT
GRAVITY DIVISION

LEAVENWORTH STATION - FISH HATCHERY
EXISTING WATER SUPPLY PIPELINE

SARA PUTNAM
DESIGNED
STERLING WESTFALL
DRAWN
STERLING WESTFALL
CHECKED
TECH. APPR. Sterling Westfall, *P.E.*
APPROVED Kevin O'Shea, *P.E.*
Peer Reviewer - Plant Structures Group

DENVER, CO 2025-11-07

MISCELLANEOUS METALWORK

TYPICAL VAULT SUMP PIT COVER - PLAN, SECTIONS, AND DETAIL

222-D-60363

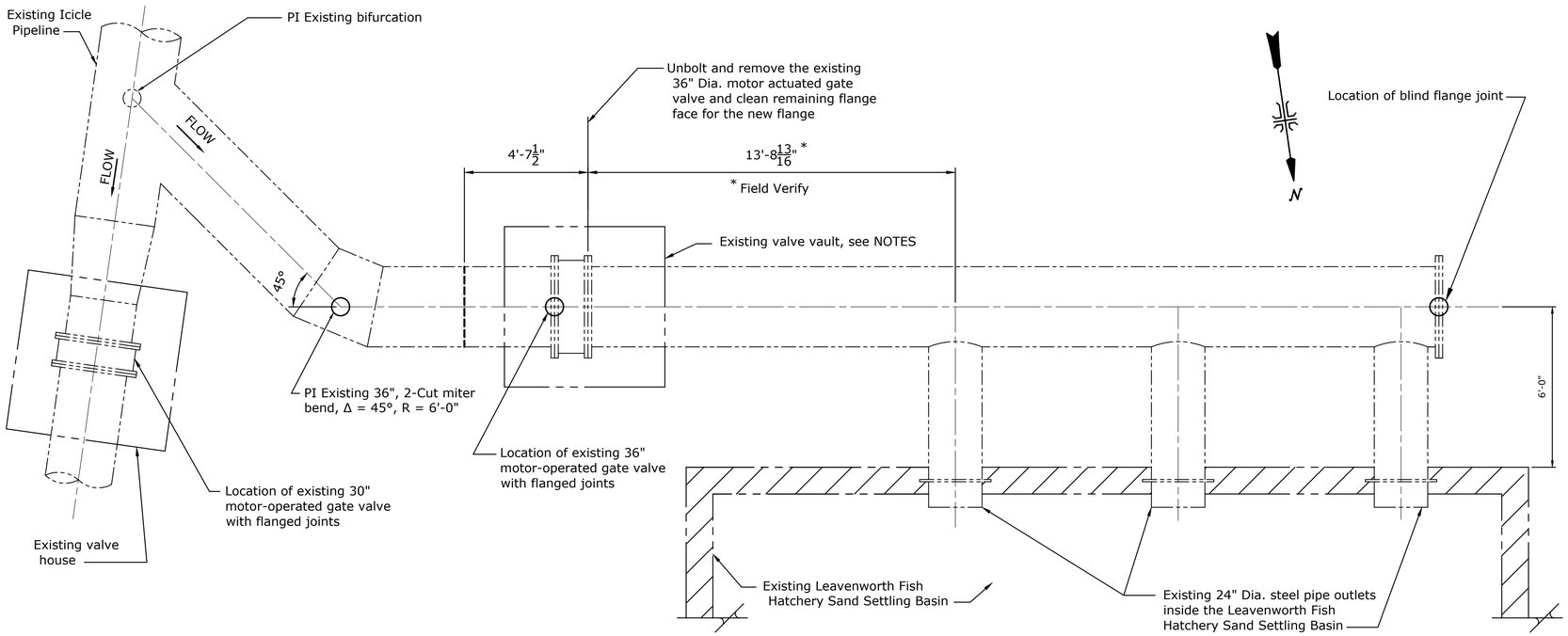

PLAN
(EXISTING LAYOUT)

GENERAL NOTES

1. Provide nuts, bolts, and gaskets suitable for cold water service.
2. All flanges shall be AWWA Class D flanges.
3. Threaded fittings shall be 150 lb. MI.
4. Additional fittings, flanges, or welded joints added by the contractor to facillitate installation of the steel piping are subject to Government approval.
5. Rotate piping inside of grooved-end type couplings as needed for alignment.
6. Welding symbols apply to the joints of all members of similar identification.
7. All metal piping shall have a minimum wall thickness = $\frac{1}{4}$" unless otherwise shown.
8. Hydrostatic test pressure for the new steel piping shall be 50 psig.
9. Contractor to field verify the location of the existing valve vault, pipes, and equipment as needed for the installation of the new steel pipe, valve, and associated equipment.
10. Field verify the centerline of the existing pipe.

REFERENCE DRAWINGS

ALIGNMENT - PLAN AND PROFILE_____222-D-60354
STRUCTURAL - CONCRETE VAULT_____222-D-60360
MECHANICAL - PIPE CONNECTIONS _____222-D-60351

STANDARD REFERENCE DRAWINGS

FLANGE SUPPORT_____40-D-7018

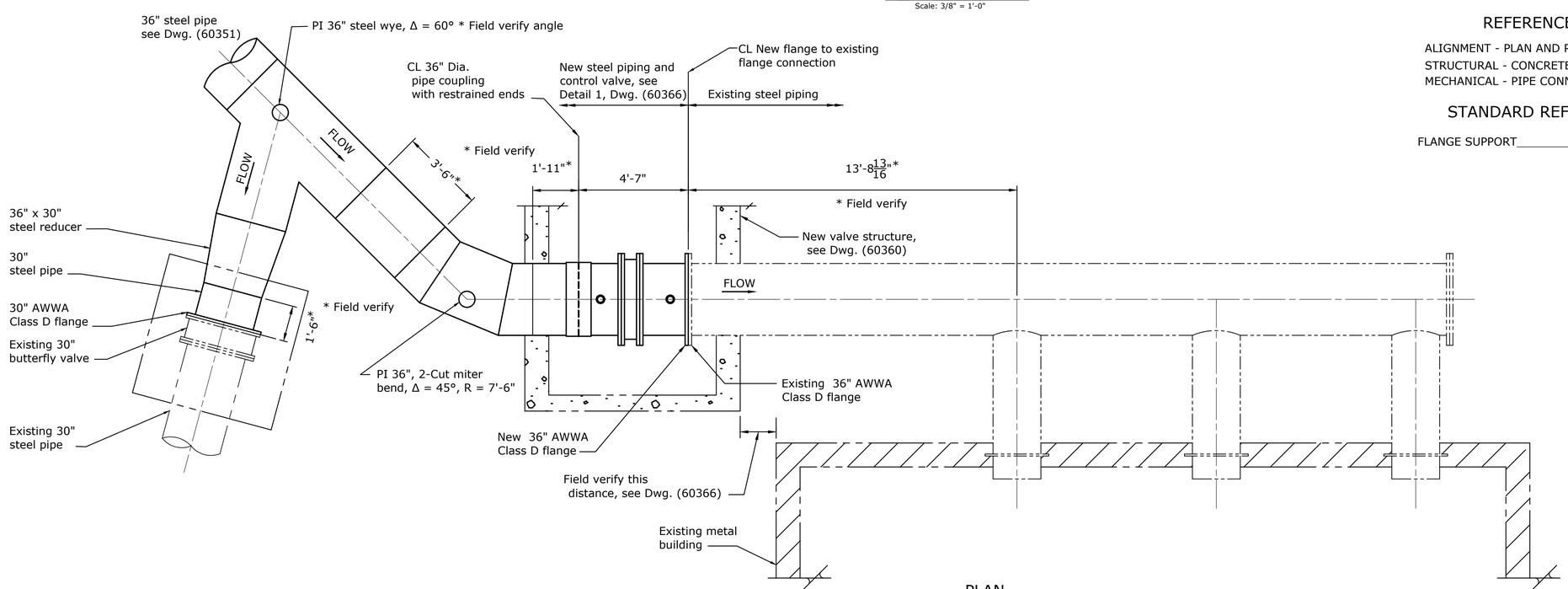

PLAN
(NEW ARRANGEMENT)

BUREAU OF RECLAMATION

ALWAYS THINK SAFETY

U.S. DEPARTMENT OF THE INTERIOR
BUREAU OF RECLAMATION
COLUMBIA BASIN PROJECT
GRAVITY DIVISION

LEAVENWORTH STATION – FISH HATCHERY
EXISTING WATER SUPPLY PIPELINE REHABILITATION

T. Sharp DESIGNED
T. Sharp DRAWN
T. Diigal CHECKED
J. Hammond P.E. TECH. APPR.
C. Young P.E. APPROVED
ADMIN APPROVAL -

DENVER, CO 2025-12-4

STEEL PIPING AND VALVES

PLANS

222-D-60365

SHEET 1

LAST SAVED DATE 2025-12-04
LAST SAVED BY TSHARP

CAD SYSTEM AutoCAD 2025 (LMS TECH)
CAD FILENAME 222-D-60365-RD-1.DWG

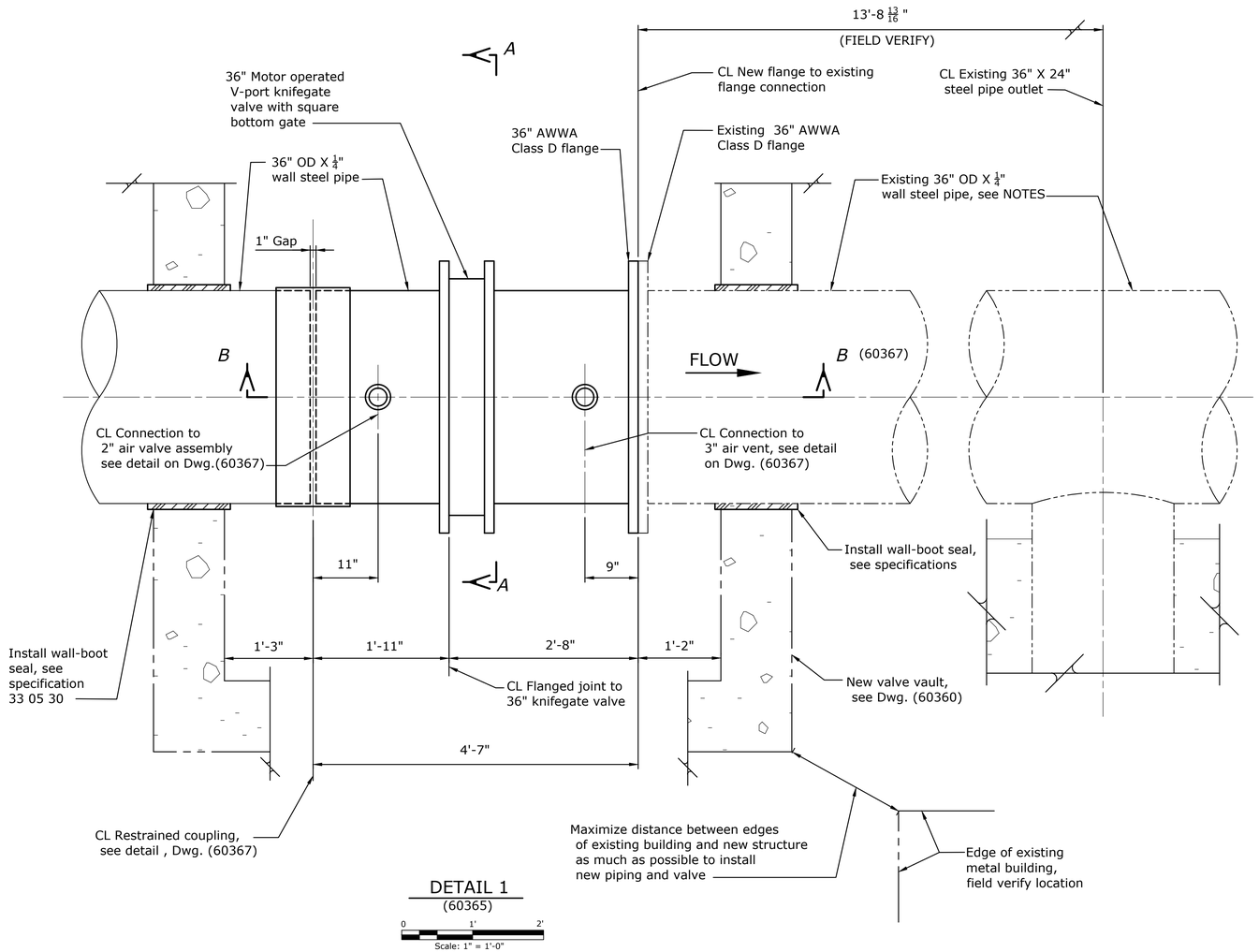

DETAIL 1
(60365)

0 1' 2'
Scale: 1" = 1'-0"

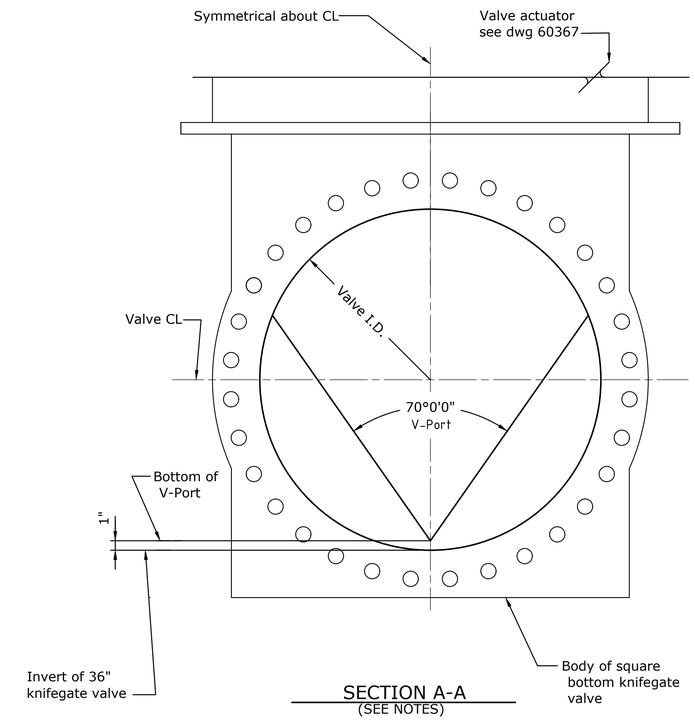

SECTION A-A
(SEE NOTES)

0 1/2' 1' 1 1/2'
Scale: 1 1/2" = 1'-0"

NOTES

1. For General Notes see Dwg. (60365).
2. Field verify the outside diameter of existing pipe.

BUREAU OF RECLAMATION

ALWAYS THINK SAFETY

U.S. DEPARTMENT OF THE INTERIOR
BUREAU OF RECLAMATION
COLUMBIA BASIN PROJECT
GRAVITY DIVISION

LEAVENWORTH STATION – FISH HATCHERY
EXISTING WATER SUPPLY PIPELINE REHABILITATION

T. Sharp
DESIGNED
T. Sharp
DRAWN
T. Djiqal
CHECKED
J. Hammond P.E.
TECH. APPR.
C. Young P.E.
APPROVED
ADMIN APPROVAL -

DENVER, CO 2025-12-4

STEEL PIPING AND VALVES

SECTION AND DETAIL

222-D-60366

SHEET 2

LAST SAVED DATE 2025-12-04
LAST SAVED BY TSHARP

CAD SYSTEM AutoCAD LT 2025 (LMS TECH)
CAD FILENAME 222-D-60366-RD-1.DWG

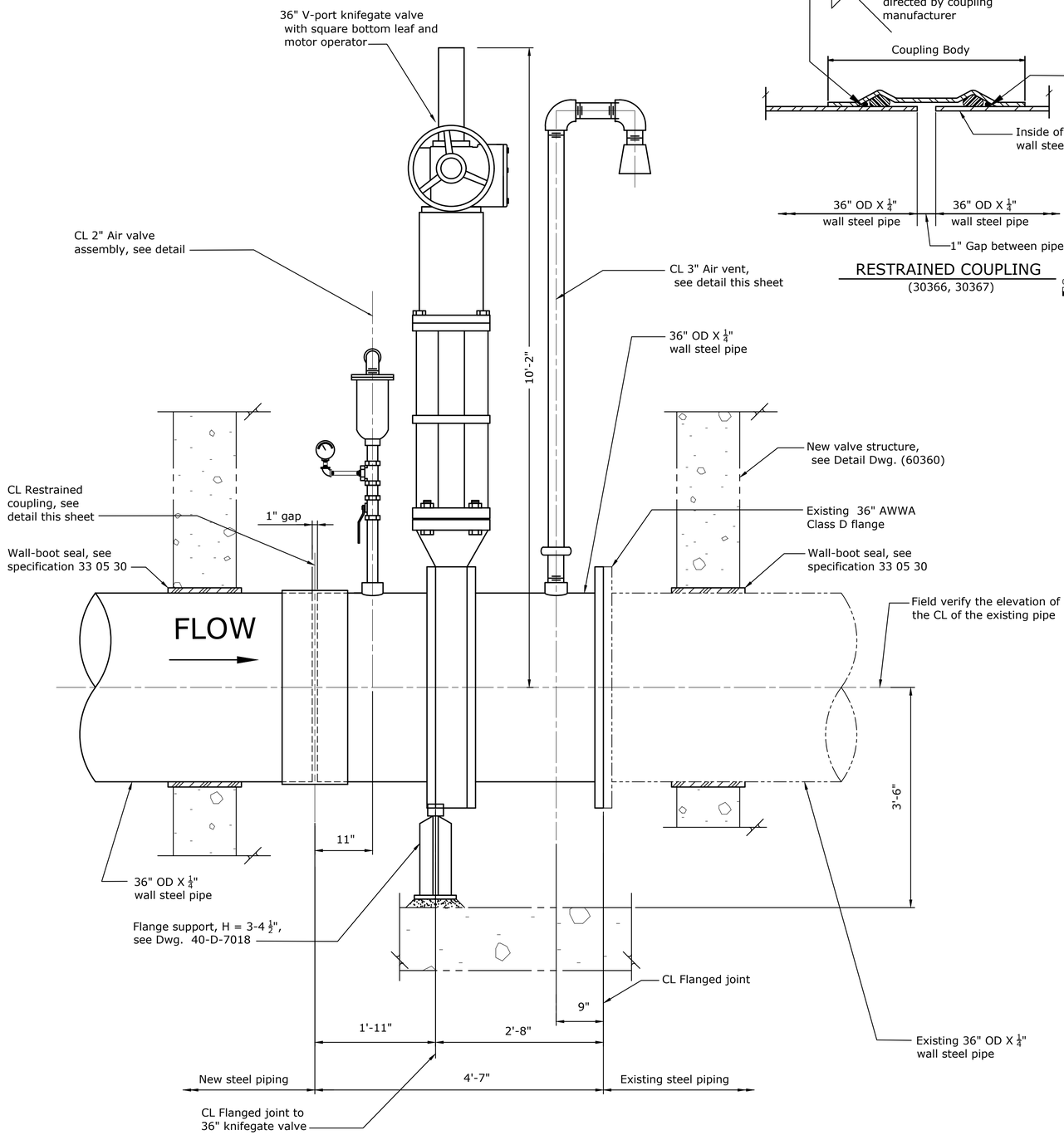

SECTION A-A
(60366)

Scale: 1" = 1'-0"

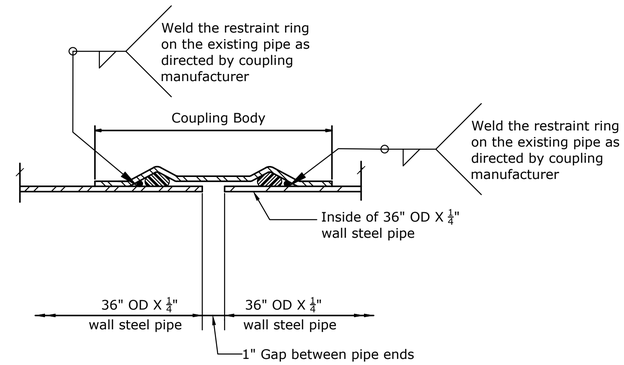

RESTRAINED COUPLING
(30366, 30367)

Scale: 1/4" = 1'-0"

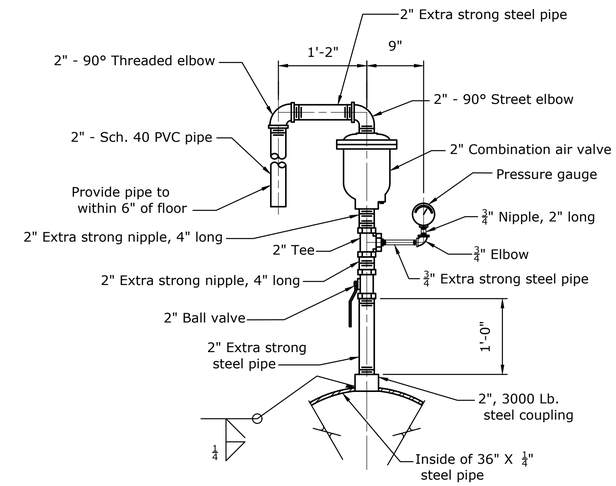

2-INCH AIR VALVE ASSEMBLY

Scale: 1" = 1'-0"

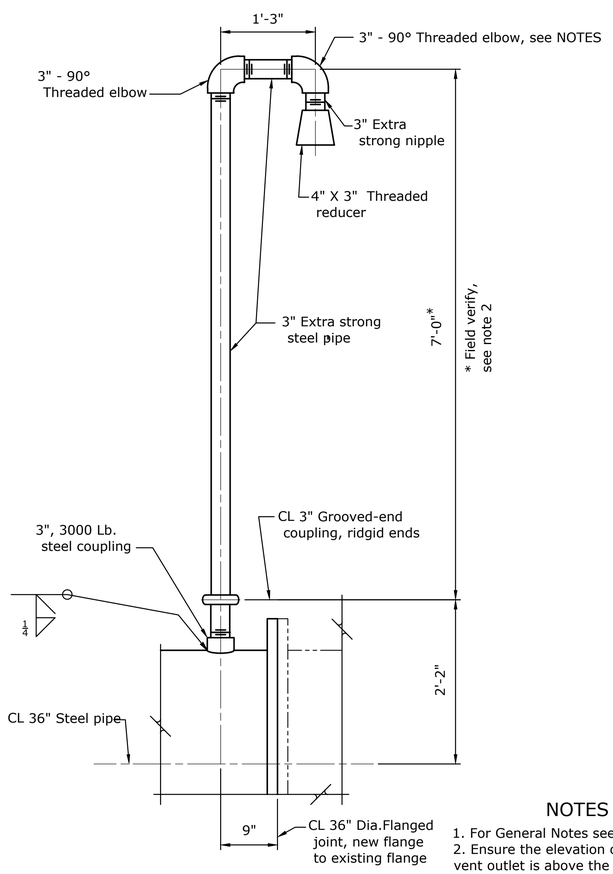

3-INCH AIR VENT

Scale: 1" = 1'-0"

NOTES

1. For General Notes see Dwg. (60365).
2. Ensure the elevation of the 3" Dia. vent outlet is above the maximum water surface in the Sand Settling Basin.
3. Provide threaded unions and bushings to install piping.

BUREAU OF RECLAMATION

ALWAYS THINK SAFETY

U.S. DEPARTMENT OF THE INTERIOR
BUREAU OF RECLAMATION
COLUMBIA BASIN PROJECT
GRAVITY DIVISION

LEAVENWORTH STATION – FISH HATCHERY
EXISTING WATER SUPPLY PIPELINE REHABILITATION

T. Sharp
DESIGNED
T. Sharp
DRAWN
T. Digal
CHECKED
J. Hammond P.E.
TECH. APPR.
C. Young P.E.
APPROVED
ADMIN APPROVAL -

DENVER, CO 2025-12-4

STEEL PIPING AND VALVES

SECTION AND DETAILS

222-D-60367

SHEET 3

LAST SAVED DATE 2025-12-4
LAST SAVED BY TSHARP

CAD SYSTEM AutoCAD 2025
CAD FILENAME 222-D-60367-RD-1.DWG

Released

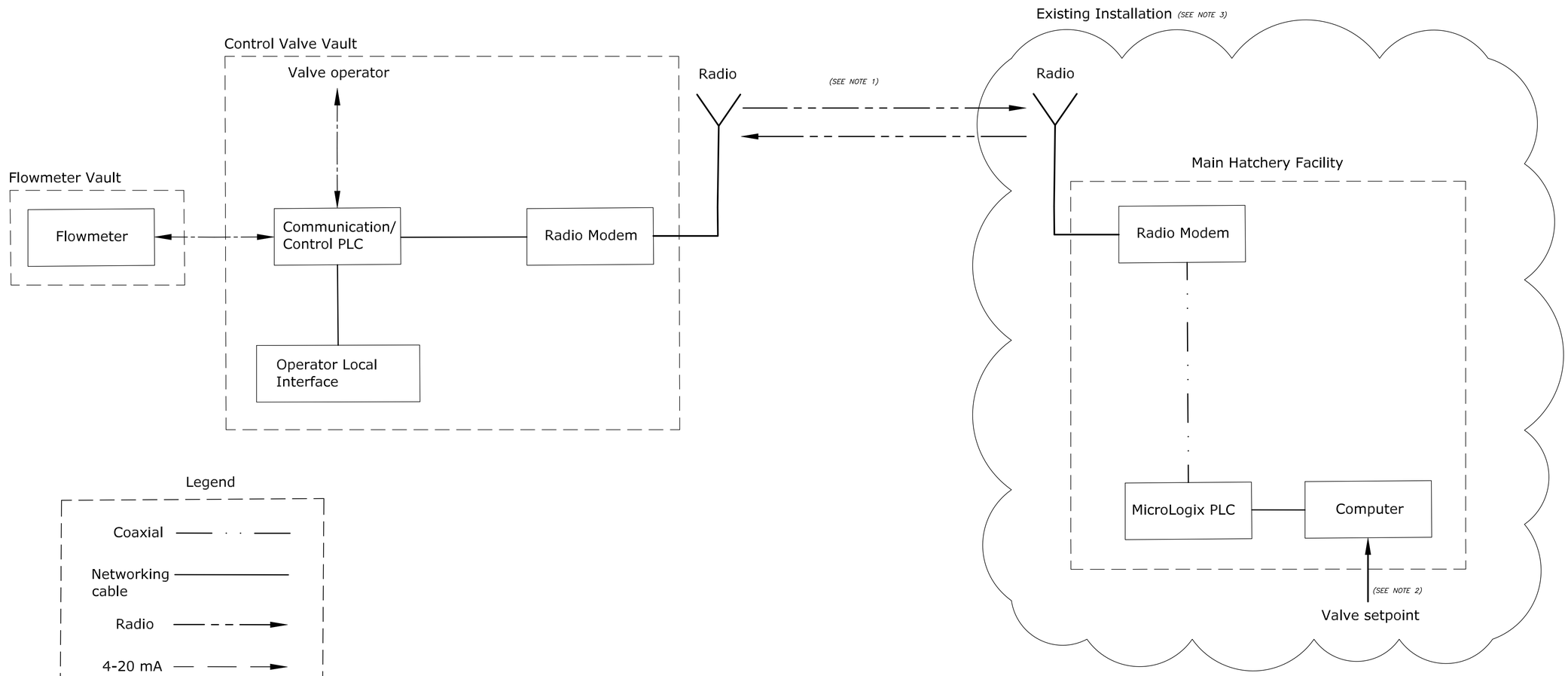

Legend

- Coaxial
- Networking cable
- Radio
- 4-20 mA
- Modbus Serial

NOTES

1. Radio signals must be encrypted if existing radio system is encrypted.
2. Contractor shall provide control interface to valve control PLC
3. Contractor shall interface all provided equipment with existing installation. Provide a fully-operating, turnkey solution for Contractor's scope of work, including reprogramming of existing equipment.

RECLAMATION
Managing Water in the West

ALWAYS THINK SAFETY

U.S. DEPARTMENT OF THE INTERIOR
BUREAU OF RECLAMATION
COLUMBIA BASIN PROJECT
GRAVITY DIVISION
LEAVENWORTH STATION – FISH HATCHERY
EXISTING WATER SUPPLY PIPELINE REHABILITATION

REV NO		
1	2025-11-21	D REWORK FOR LEAVENWORTH PHASE II PIPELINE REHAB REDUX.; REVISED VAULT, ADDED CLOUD FOR EXISTING EQUIPMENT
	Cheng, Roland P.E.	

Roland Cheng
DESIGNED
Roland Cheng
DRAWN
Lisa Gentry, P.E.
CHECKED
Lisa Gentry, P.E.
TECH. APPR.
Jay Boggess, P.E.
APPROVED
PEER REVIEWER - Manager, Electrical Controls Group

DENVER, CO 2020-12-11

CONTROL VALVE VAULT

ELECTRICAL NETWORKING DIAGRAM

222-D-60369

SHEET 1

DATE AND TIME PLOTTED
PLOTTED BY
CAD SYSTEM
CAD FILENAME

Released

VALVE VAULT ENCLOSURE

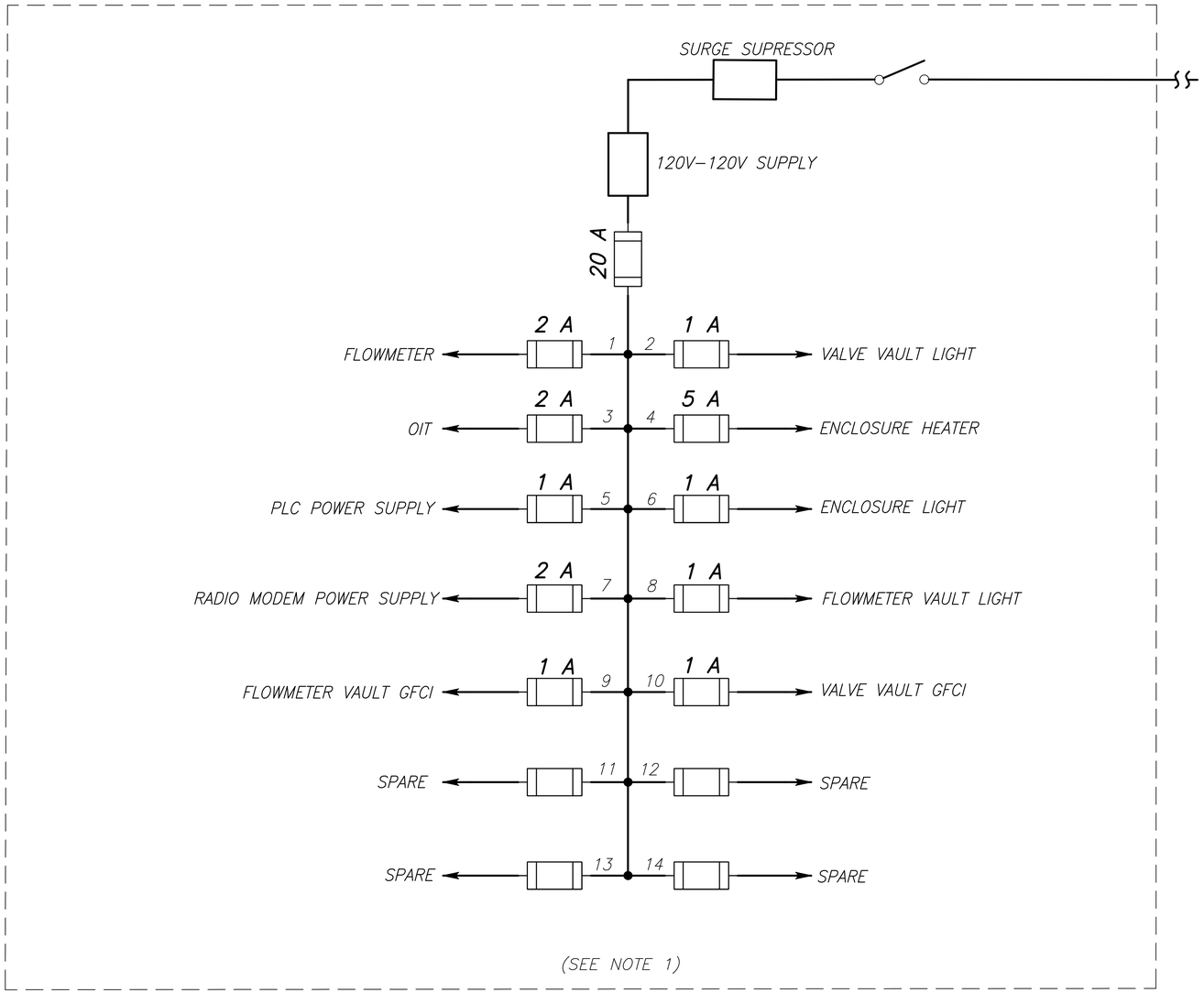

120 V AC circuit fed from subpanel of EP 6 located on north end of Sand Settling Basin

NOTES

1. Contractor to determine fuse sizing of each circuit.

RECLAMATION
Managing Water in the West

ALWAYS THINK SAFETY

U.S. DEPARTMENT OF THE INTERIOR
BUREAU OF RECLAMATION
COLUMBIA BASIN PROJECT
GRAVITY DIVISION

LEAVENWORTH STATION – FISH HATCHERY
EXISTING WATER SUPPLY PIPELINE REHABILITATION

REV NO	DATE	DESCRIPTION
1	2025-12-01	D REWORK FOR LEAVENWORTH PHASE II PIPELINE REHAB REDUX; REALLOCATED EQUIPMENT AND CHANGED FUSE SIZING
		Cheng, Roland P.E.

Roland Cheng
DESIGNED
Roland Cheng
DRAWN
Lisa Gentry, P.E.
CHECKED
Lisa Gentry, P.E.
TECH. APPR.
Jay Boggess, P.E.
APPROVED
PEER REVIEWER - Manager, Electrical Controls Group

DENVER, CO 2020-12-11

CONTROL VALVE VAULT

ELECTRICAL SINGLE LINE DIAGRAM

222-D-60370

SHEET 1

DATE AND TIME PLOTTED
PLOTTED BY
CAD SYSTEM
CAD FILENAME

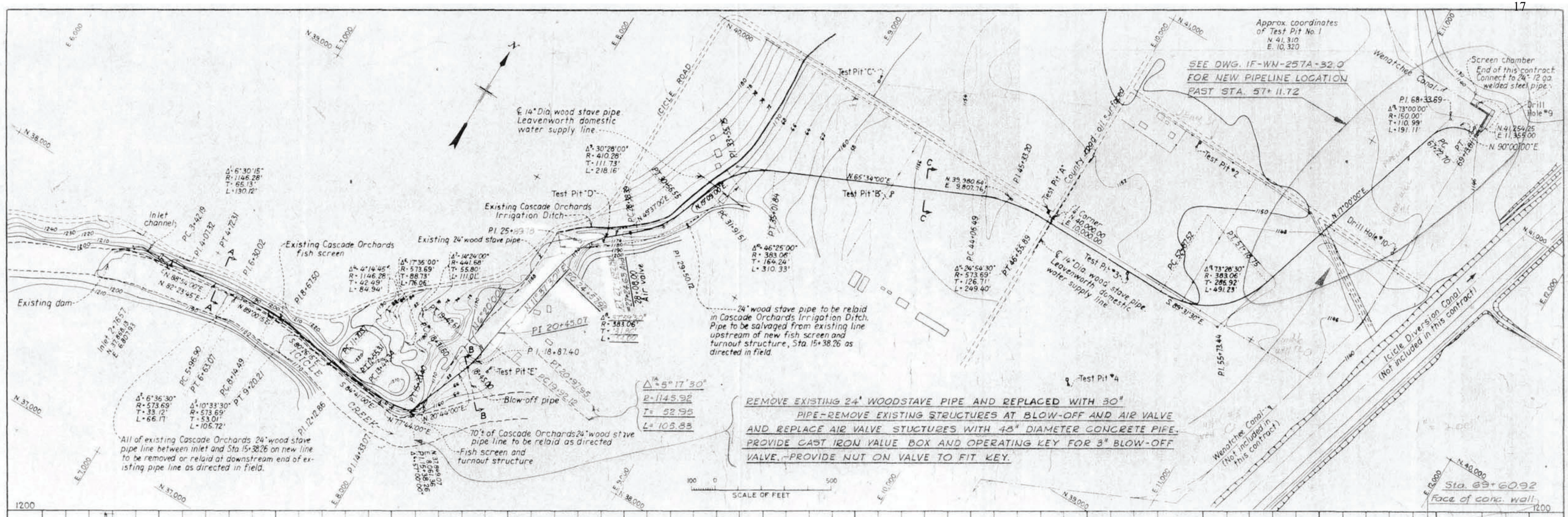
Approx. coordinates of Test Pit No. 1
N. 41,310
E. 10,320
SEE DWG. 1F-WN-257A-32.0 FOR NEW PIPELINE LOCATION PAST STA. 57+11.72
Screen chamber End of this contract Connect to 24"-12 ga. welded steel pipe
Wenatchee Canal
Drill Hole #9
Drill Hole #10
Icicle Diversion Canal (Not included in this contract)
Wenatchee Canal (Not included in this contract)
Existing dam
Inlet channel
Existing Cascade Orchards fish screen
Existing Cascade Orchards Irrigation Ditch
Existing 24" wood stave pipe
℄ 14" Dia. wood stave pipe Leavenworth domestic water supply line
Test Pit "C"
Test Pit "D"
Test Pit "B"
Test Pit "A"
Test Pit #2
Test Pit #3
Test Pit #4
Test Pit "E"
County road, oil surfaced
Blow-off pipe
Air valve
24" wood stave pipe to be relaid in Cascade Orchards Irrigation Ditch. Pipe to be salvaged from existing line upstream of new fish screen and turnout structure, Sta. 15+38.26 as directed in field.
70'± of Cascade Orchards 24" wood stave pipe line to be relaid as directed
Fish screen and turnout structure
All of existing Cascade Orchards 24" wood stave pipe line between inlet and Sta. 15+38.26 on new line to be removed or relaid at downstream end of existing pipe line as directed in field.
REMOVE EXISTING 24" WOODSTAVE PIPE AND REPLACED WITH 30" PIPE-REMOVE EXISTING STRUCTURES AT BLOW-OFF AND AIR VALVE AND REPLACE AIR VALVE STUCTURES WITH 48" DIAMETER CONCRETE PIPE. PROVIDE CAST IRON VALUE BOX AND OPERATING KEY FOR 3" BLOW-OFF VALVE.-PROVIDE NUT ON VALVE TO FIT KEY.
SCALE OF FEET
Sta. 69+60.92 Face of conc. wall
Air vent
Min. W.S. El. 1186.9
Sta. 2+76.57
Sta. 4+50
Sta. 7+00
Sta. 10+00
Sta. 15+38.26
Sta. 16+20
Sta. 17+15
Sta. 25+00
Sta. 34+00
Sta. 35+20
Sta. 36+50
Sta. 37+50
Sta. 46+50
Sta. 47+21, County road, oil surfaced
Sta. 55+00
Cascade Orchards pipe line
Blow-off valve and box
Air valve and box
Fish screen and turnout structure
28" Continuous wood stave pipe 1½" Staves, one-piece ½"ϕ bands
24" Continuous wood stave pipe; 1½" Staves, one-piece 7/16"ϕ bands
Ground surface
Note — Sta. 32+13.5 - 14" Dia. wood stave pipe. Leavenworth domestic water supply line.
Note — Sta. 47+31, 14" Dia. wood stave pipe. Leavenworth domestic water supply line.
30" pipe profile
Profile 30" pipe
24" Continuous wood stave pipe
End of this contract Sta. 69+13.81 Connect to 24"-12 ga. welded steel pipe
Invert El. 1137.86
Existing woodstave
Icicle Road
Ground surface
28" Continuous wood stave pipe between inlet structure and turnout structure
SECTION A-A
Valve box
Backfilled trench
Screened outlet
River bed
3" Std. galv pipe
4" Sewer pipe drain, cemented joints
SECTION B-B
24" Continuous wood stave pipe between turnout structure and screen chamber
SECTION C-C
Original ground surface
Excavation line
Steepest practicable slope
Backfill below horiz. ℄ of pipe to be compacted
SEE SPECS
IN OTHER THAN ROCK
IN ROCK
TYPICAL PIPE TRENCH SECTIONS
257A
33.0
ONLY NOTES UNDERLINED REFER TO THIS CONTRACT.-THIS DWG. REPRODUCED FROM USBR DWG. Nº 222-D-4067. (CONTRACT DRAWING FOR INSTALLATION OF EXISTING WOOD STAVE PIPELINE.)
FOR INFORMATION ONLY
REVISIONS
DATE
DESCRIPTION
LEAVENWORTH NATIONAL FISH HATCHERY
ICICLE CREEK PIPELINE — PLAN & PROFILE
DESIGNED
DRAWN
DATE 9-64
DWG. NO. 1F-WN-257A-33.0
BASE: U.S.B.R. MAY 1939 No. 222-D-4067

DETAILING CONVENTIONS

DETAILS:

DETAIL NUMBER

5 / 21 22

SHEET WHERE DETAIL IS SHOWN

SHEET WHERE DETAIL IS TAKEN

SECTIONS, VIEWS AND ELEVATIONS:

SECTION LETTER

C / 13 13

SHEET WHERE SECTION IS SHOWN

SHEET WHERE SECTION IS TAKEN

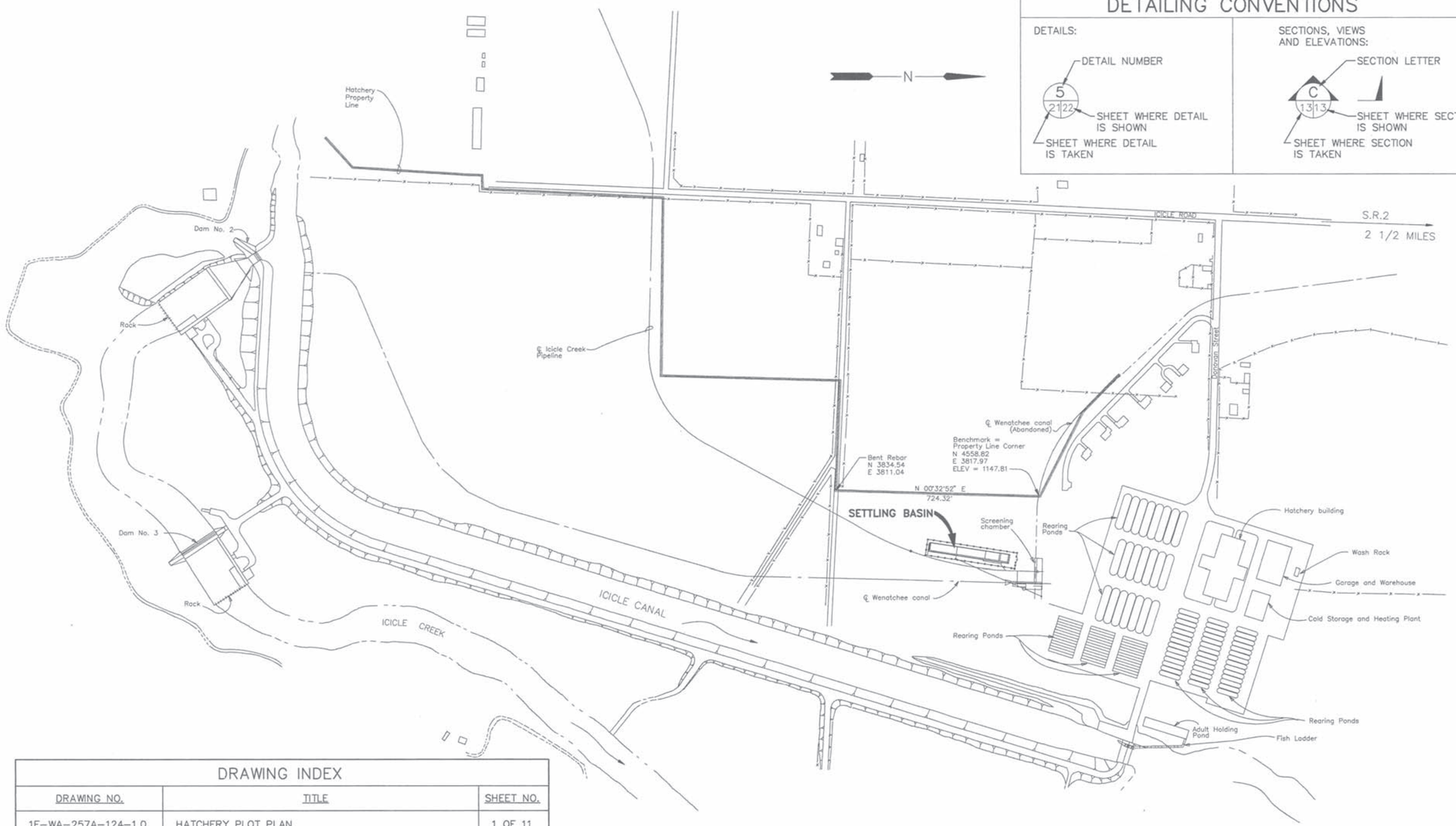

HATCHERY PLOT PLAN

200' 100' 0 200' 400'

Scale in Feet

LOCATION MAP

NO SCALE

GENERAL NOTES

1. CONTRACTOR SHALL VERIFY AND CONFIRM ALL DIMENSIONS AND CONDITIONS SHOWN OR IMPLIED ON THE DRAWINGS AND SPECIFICATIONS AS WELL AS THE EXISTING WORK AND PHYSICAL CONDITIONS OF THE SITE AND STRUCTURE. CONFLICTS IN SIZE OR LOCATION SHALL BE REFERRED TO THE USF & WS ENGINEER OR DESIGNATED REPRESENTATIVE.
2. MATERIALS, CONSTRUCTION AND WORKMANSHIP SHALL CONFORM TO THE SPECIFICATIONS AND DRAWINGS.

ABBREVIATIONS:

@	AT	O.C.	ON CENTER
BLDG	BUILDING	OD	OUTSIDE DIAMETER
C	CHANNEL SHAPE	OVHD	OVERHEAD
CCP	CONCRETE CYLINDER PIPE	PL, ℙ	PLATE
		PVC	POLYVINYL CHLORIDE
℄	CENTERLINE	REQ'D	REQUIRED
CONC.	CONCRETE	REINF.	REINFORCING
DR	DOOR	SCH	SCHEDULE
ø	DIAMETER	SQ.	SQUARE
EA.	EACH	STD	STANDARD
EL, ELEV.	ELEVATION	STL	STEEL
EXP	EXPANSION	TO	TOP OF
EW	EACH WAY	TS	TUBE STEEL
HD	HEAVY DUTY	TYP	TYPICAL
HM	HOLLOW METAL	UNO	UNLESS NOTED OTHERWISE
I.E.	INVERT ELEVATION		
L	ANGLE SHAPE	W	WIDE FLANGE SHAPE
LLV	LONG LEG VERTICAL	W/	WITH
		WS	WELDED STEEL
MAX	MAXIMUM	WT	WEIGHT, WIDE FLANGE TEE SHAPE
MIN	MINIMUM		
MFG	MANUFACTURER	WWF	WELDED WIRE FABRIC
NO., #	NUMBER		

DRAWING INDEX

DRAWING NO.	TITLE	SHEET NO.
1F-WA-257A-124-1.0	HATCHERY PLOT PLAN	1 OF 11
1F-WA-257A-124-2.0	SITE PLAN AND DETAILS	2 OF 11
1F-WA-257A-124-3.0	SITE DETAILS	3 OF 11
1F-WA-257A-124-4.0	PLAN AND SECTION	4 OF 11
1F-WA-257A-124-5.0	REINFORCED CONCRETE ELEVATION, DETAILS AND SECTIONS	5 OF 11
1F-WA-257A-124-6.0	REINFORCED CONCRETE DETAILS AND SECTIONS	6 OF 11
1F-WA-257A-124-7.0	STRUCTURAL STEEL ELEVATION, DETAILS AND SECTIONS	7 OF 11
1F-WA-257A-124-8.0	ARCHITECTUAL FLOOR PLAN	8 OF 11
1F-WA-257A-124-9.0	ARCHITECTUAL ELEVATIONS SHEET 1	9 OF 11
1F-WA-257A-124-10.0	ARCHITECTUAL ELEVATIONS SHEET 2	10 OF 11
1F-WA-257A-124-11.0	ARCHITECTUAL SECTIONS AND DETAILS	11 OF 11

FOR INFORMATION ONLY

REVISIONS	DATE	BY

UNITED STATES DEPARTMENT OF THE INTERIOR
FISH AND WILDLIFE SERVICE
REGION 1, DIVISION OF ENGINEERING
PORTLAND, OREGON

SUBMITTED: REGIONAL ENGR.
REVIEWED:
RECOMMENDED: REGIONAL DIRECTOR
W.O. APPROVAL

CHARLES W. CUTTING — STATE OF WASHINGTON — 19446 — REGISTERED PROFESSIONAL ENGINEER — EXPIRES: 6/11/94

Sverdrup CORPORATION

LEAVENWORTH
NATIONAL FISH HATCHERY
SETTLING BASIN
HATCHERY PLOT PLAN

CHELAN COUNTY WASHINGTON

DRAWN: JEE SURVEYED: SVCV DESIGNED: SPB CHECKED: CWC

DATE: JULY 1993
PORTLAND, OREGON

DRAWING NO. 1F-WA-257A-124-1.0

SHEET 1 OF 11

C5100001.DWG 040532P 011428JE 07.13.93

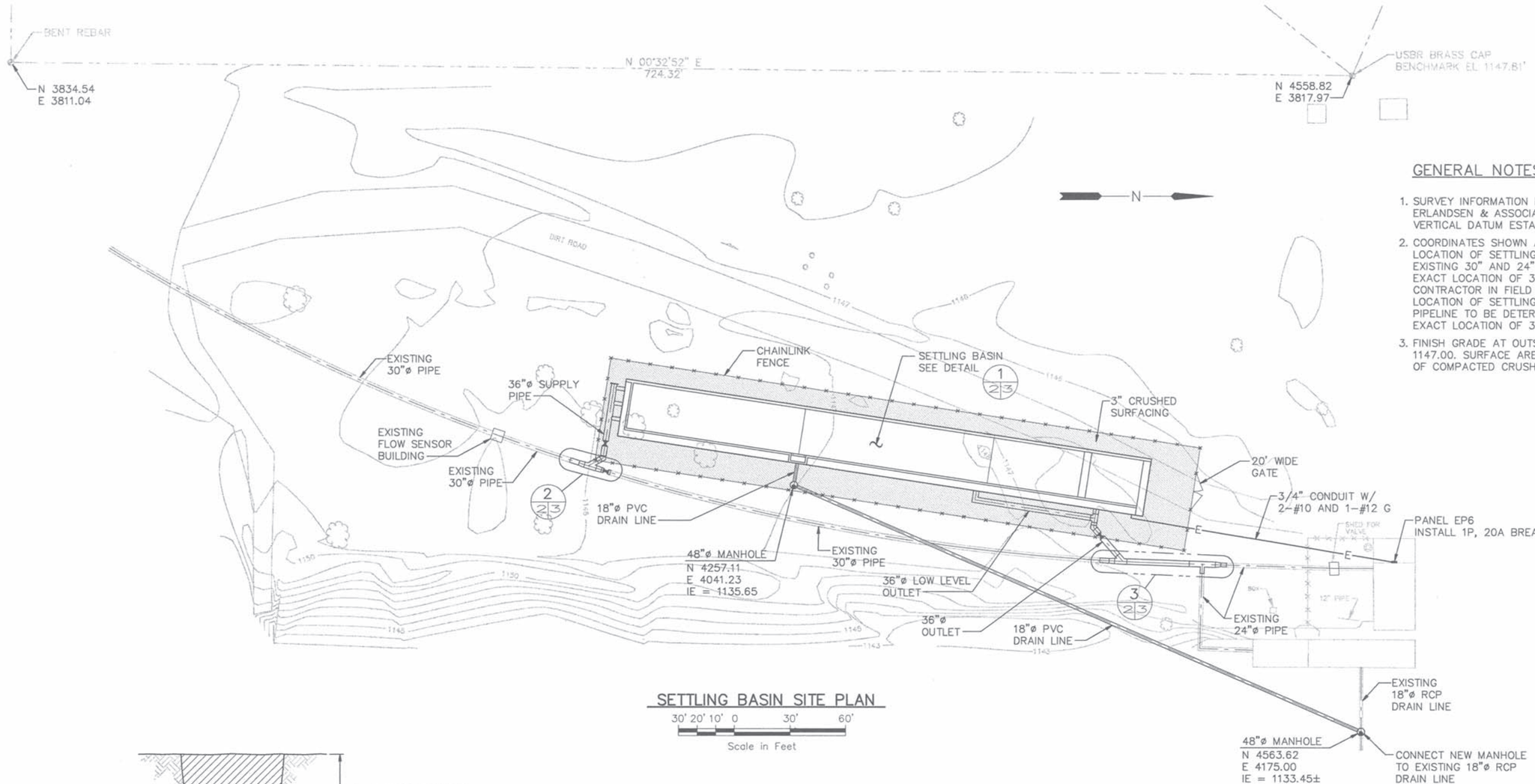

SETTLING BASIN SITE PLAN

30' 20' 10' 0 30' 60'

Scale in Feet

GENERAL NOTES:

1. SURVEY INFORMATION IS BASED ON SURVEY PERFORMED BY ERLANDSEN & ASSOCIATES, BREWSTER, WA, IN MARCH, 1993. VERTICAL DATUM ESTABLISHED FROM U.S.B.R. BENCHMARK.
2. COORDINATES SHOWN ARE FOR BIDDING PURPOSES ONLY. EXACT LOCATION OF SETTLING BASIN AND CONNECTION POINTS TO EXISTING 30" AND 24" PIPELINES MAY REQUIRE FIELD ADJUSTMENTS. EXACT LOCATION OF 30" PIPELINE TO BE DETERMINED BY CONTRACTOR IN FIELD AS THE FIRST ORDER OF WORK. EXACT LOCATION OF SETTLING BASIN AND CONNECTION POINTS TO 30" PIPELINE TO BE DETERMINED IN FIELD WITH THE ENGINEER AFTER EXACT LOCATION OF 30" PIPELINE IS DETERMINED.
3. FINISH GRADE AT OUTSIDE OF SETTLING BASIN WALLS SHALL BE 1147.00. SURFACE AREA INSIDE CHAIN LINK FENCE WITH 3" OF COMPACTED CRUSHED SURFACING.

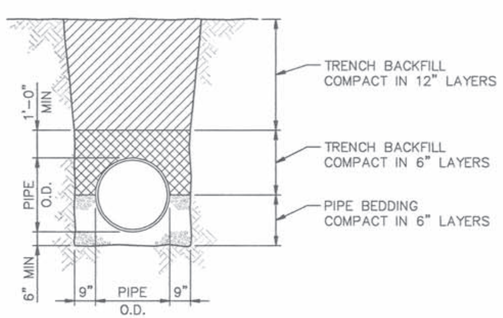

TYPICAL PIPE BEDDING DETAIL

NO SCALE

FOR INFORMATION ONLY

REV.	DATE	DESCRIPTION	BY

CHARLES W. CUTTING — STATE OF WASHINGTON — 18446 — REGISTERED PROFESSIONAL ENGINEER — EXPIRES: 6/11/94

Sverdrup CORPORATION

LEAVENWORTH NFH

SETTLING BASIN

SITE PLAN AND DETAILS

DESIGNED	DRAWN	CHECKED	DATE	DRAWING NO.
SPB	JEE	CWC	7/93	1F-WA-257A-124-2.0

SHEET 2 OF 11

C5100002.DWG 040532P 011428JE 07.09.93

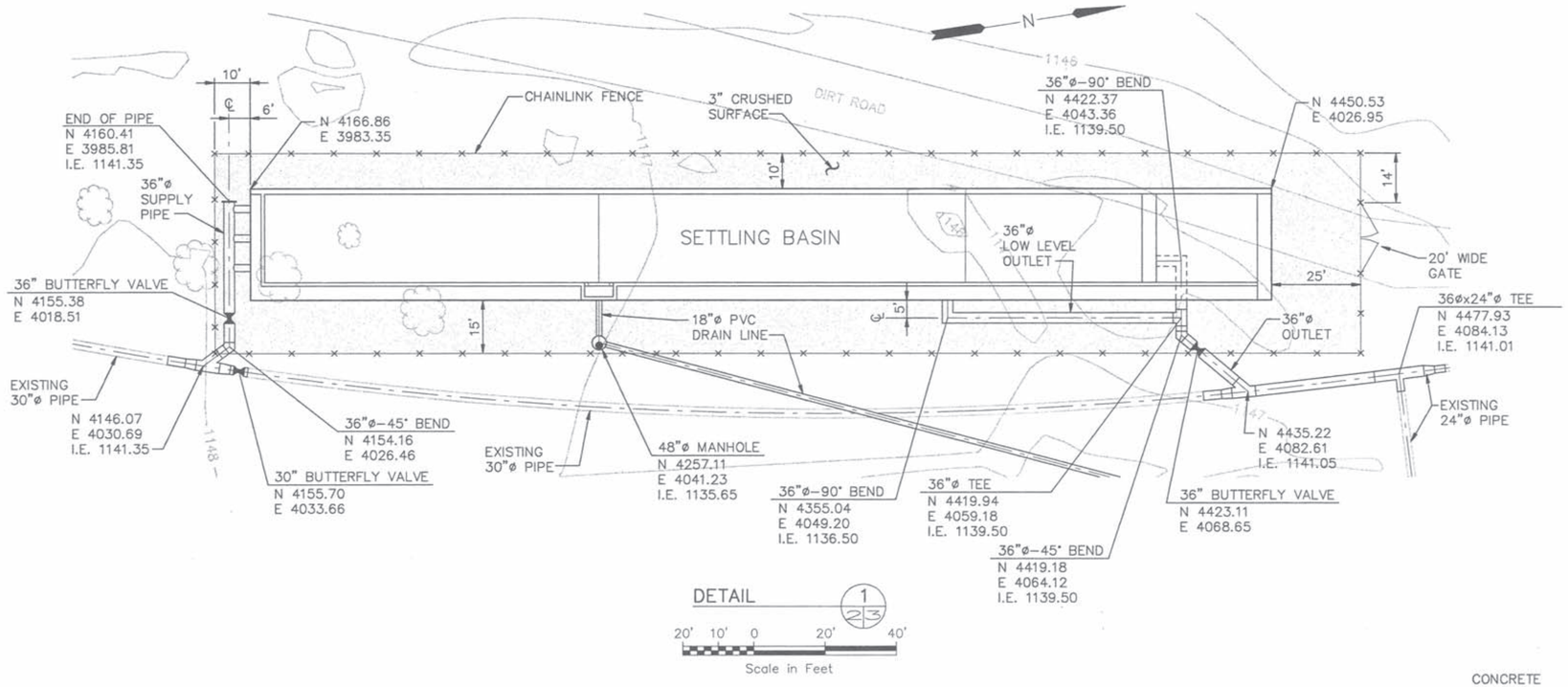

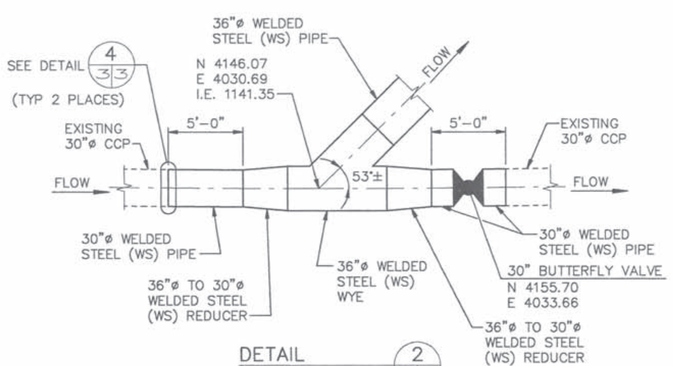

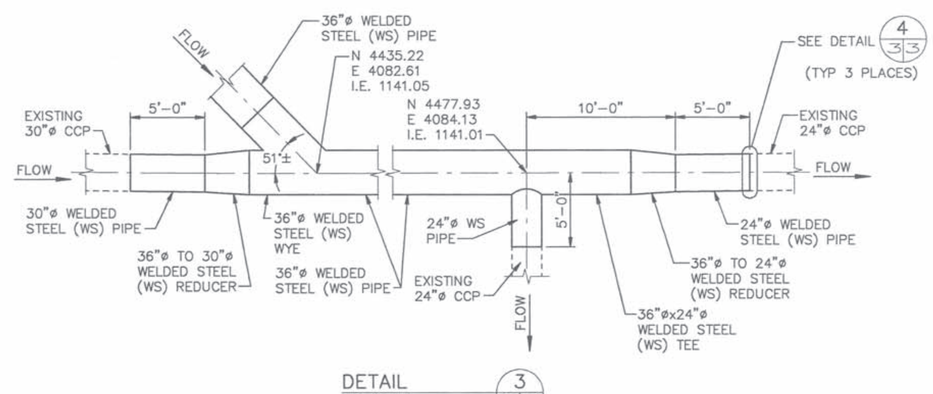

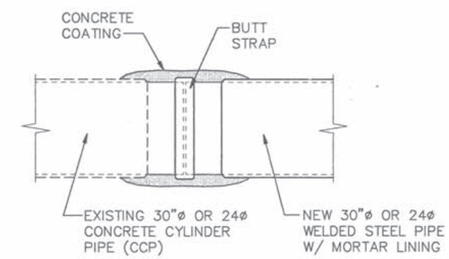

CONNECTION SEQUENCE:

1. CHIP AWAY CONCRETE COATING ON CCP PIPE AT LOCATION OF CONNECTION.
2. TACK WELD ROD WRAP TO STEEL CAN 6" BACK FROM POINT OF CONNECTION.
3. REMOVE ROD WRAP AT POINT OF CONNECTION.
4. GRIND WELD ON CAN SMOOTH TO ALLOW BUTT STRAP INSTALLATION.
5. WELD BUTT STRAP INTO POSITION.
6. INSTALL EXTERIOR CONCRETE COATING, 1 1/2" MINIMUM THICKNESS.
7. REPAIR INTERIOR MORTAR COATING, MATCH EXISTING THICKNESS.

TYP PIPE CONNECTION DETAIL 4 3 3
NO SCALE

FOR INFORMATION ONLY

REV.	DATE	DESCRIPTION	BY

CHARLES W. CUTTING — STATE OF WASHINGTON — 19446 — REGISTERED PROFESSIONAL ENGINEER — EXPIRES: 6/11/94

Sverdrup CORPORATION

LEAVENWORTH NFH

SETTLING BASIN

SITE DETAILS

DESIGNED	DRAWN	CHECKED	DATE	DRAWING NO.
SPB	JEE	CWC	7/93	1F-WA-257A-124-30

C5100006.DWG 040532P 011428JE 07.13.93

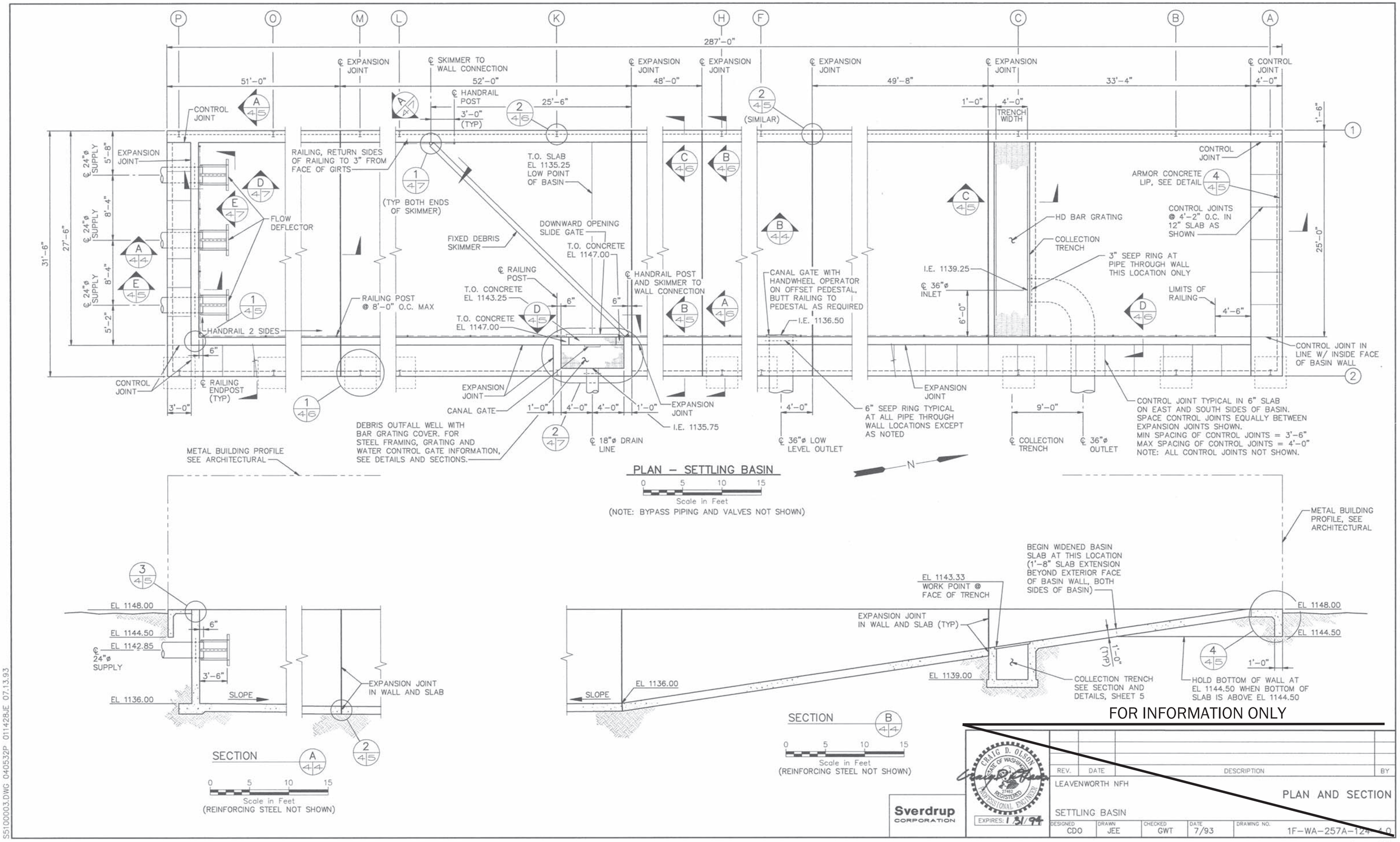
PLAN – SETTLING BASIN
Scale in Feet
(NOTE: BYPASS PIPING AND VALVES NOT SHOWN)
287'-0"
51'-0"
52'-0"
48'-0"
49'-8"
33'-4"
4'-0"
25'-6"
3'-0" (TYP)
1'-0"
4'-0" TRENCH WIDTH
℄ EXPANSION JOINT
℄ SKIMMER TO WALL CONNECTION
℄ HANDRAIL POST
℄ CONTROL JOINT
CONTROL JOINT
EXPANSION JOINT
℄ 24"ø SUPPLY
5'-8"
8'-4"
5'-2"
31'-6"
27'-6"
25'-0"
1'-6"
FLOW DEFLECTOR
RAILING, RETURN SIDES OF RAILING TO 3" FROM FACE OF GIRTS
(TYP BOTH ENDS OF SKIMMER)
T.O. SLAB EL 1135.25 LOW POINT OF BASIN
DOWNWARD OPENING SLIDE GATE
T.O. CONCRETE EL 1147.00
FIXED DEBRIS SKIMMER
℄ RAILING POST
T.O. CONCRETE EL 1143.25
T.O. CONCRETE EL 1147.00
℄ HANDRAIL POST AND SKIMMER TO WALL CONNECTION
RAILING POST @ 8'-0" O.C. MAX
HANDRAIL 2 SIDES
6"
CONTROL JOINT
℄ RAILING ENDPOST (TYP)
3'-0"
EXPANSION JOINT
CANAL GATE
1'-0"
4'-0"
4'-0"
1'-0"
I.E. 1135.75
DEBRIS OUTFALL WELL WITH BAR GRATING COVER. FOR STEEL FRAMING, GRATING AND WATER CONTROL GATE INFORMATION, SEE DETAILS AND SECTIONS.
℄ 18"ø DRAIN LINE
CANAL GATE WITH HANDWHEEL OPERATOR ON OFFSET PEDESTAL, BUTT RAILING TO PEDESTAL AS REQUIRED
I.E. 1136.50
4'-0"
℄ 36"ø LOW LEVEL OUTLET
6" SEEP RING TYPICAL AT ALL PIPE THROUGH WALL LOCATIONS EXCEPT AS NOTED
EXPANSION JOINT
9'-0"
℄ COLLECTION TRENCH
℄ 36"ø OUTLET
HD BAR GRATING
COLLECTION TRENCH
I.E. 1139.25
℄ 36"ø INLET
6'-0"
3" SEEP RING AT PIPE THROUGH WALL THIS LOCATION ONLY
ARMOR CONCRETE LIP, SEE DETAIL
CONTROL JOINTS @ 4'-2" O.C. IN 12" SLAB AS SHOWN
LIMITS OF RAILING
4'-6"
CONTROL JOINT IN LINE W/ INSIDE FACE OF BASIN WALL
CONTROL JOINT TYPICAL IN 6" SLAB ON EAST AND SOUTH SIDES OF BASIN. SPACE CONTROL JOINTS EQUALLY BETWEEN EXPANSION JOINTS SHOWN. MIN SPACING OF CONTROL JOINTS = 3'-6" MAX SPACING OF CONTROL JOINTS = 4'-0" NOTE: ALL CONTROL JOINTS NOT SHOWN.
N
METAL BUILDING PROFILE SEE ARCHITECTURAL
METAL BUILDING PROFILE, SEE ARCHITECTURAL
EL 1148.00
EL 1144.50
EL 1142.85
℄ 24"ø SUPPLY
6"
3'-6"
SLOPE
EL 1136.00
EXPANSION JOINT IN WALL AND SLAB
SECTION A
Scale in Feet
(REINFORCING STEEL NOT SHOWN)
EL 1143.33 WORK POINT @ FACE OF TRENCH
BEGIN WIDENED BASIN SLAB AT THIS LOCATION (1'-8" SLAB EXTENSION BEYOND EXTERIOR FACE OF BASIN WALL, BOTH SIDES OF BASIN)
EXPANSION JOINT IN WALL AND SLAB (TYP)
1'-0" (TYP)
EL 1139.00
EL 1136.00
SLOPE
COLLECTION TRENCH SEE SECTION AND DETAILS, SHEET 5
HOLD BOTTOM OF WALL AT EL 1144.50 WHEN BOTTOM OF SLAB IS ABOVE EL 1144.50
1'-0"
SECTION B
Scale in Feet
(REINFORCING STEEL NOT SHOWN)
FOR INFORMATION ONLY
REV. DATE DESCRIPTION BY
LEAVENWORTH NFH
PLAN AND SECTION
SETTLING BASIN
Sverdrup CORPORATION
CRAIG D. OLSON STATE OF WASHINGTON 21140 REGISTERED PROFESSIONAL ENGINEER
EXPIRES: 1/31/94
DESIGNED CDO
DRAWN JEE
CHECKED GWT
DATE 7/93
DRAWING NO. 1F-WA-257A-124-4.0
SHEET 4 OF 11
S5100003.DWG 040532P 011428JE 07.13.93

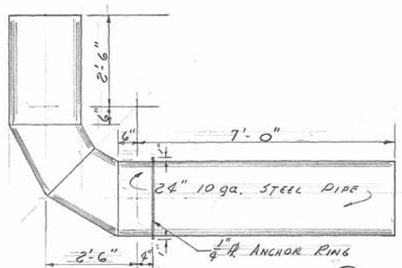

DETAIL (B)
SCALE 1/2" = 1'-0"

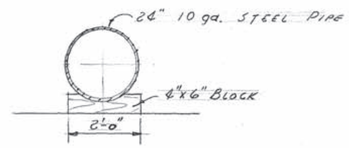

BLOCK DETAIL
SCALE 1/2" = 1'-0"

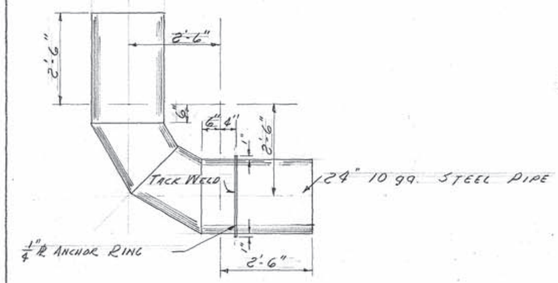

DETAIL (A)
SCALE 1/2" = 1'-0"
(2 REQUIRED)

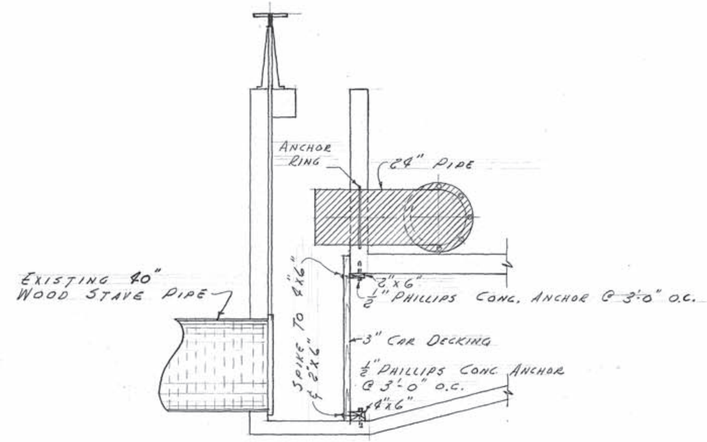

SECTION B-B
SCALE 3/8" = 1'-0"

MATERIAL ESTIMATE		
NO.	ITEM	REMARKS
3	24" DIA. 10 ga. STEEL PIPE	20' LENGTH
1	" " " " " "	12' "
2	ELBOW (DETAIL (A))	
1	" (DETAIL (B))	
6	DRESSER COUPLING (STYLE 38)	
8	4"x6"x2'-0" WOOD BLOCKS	

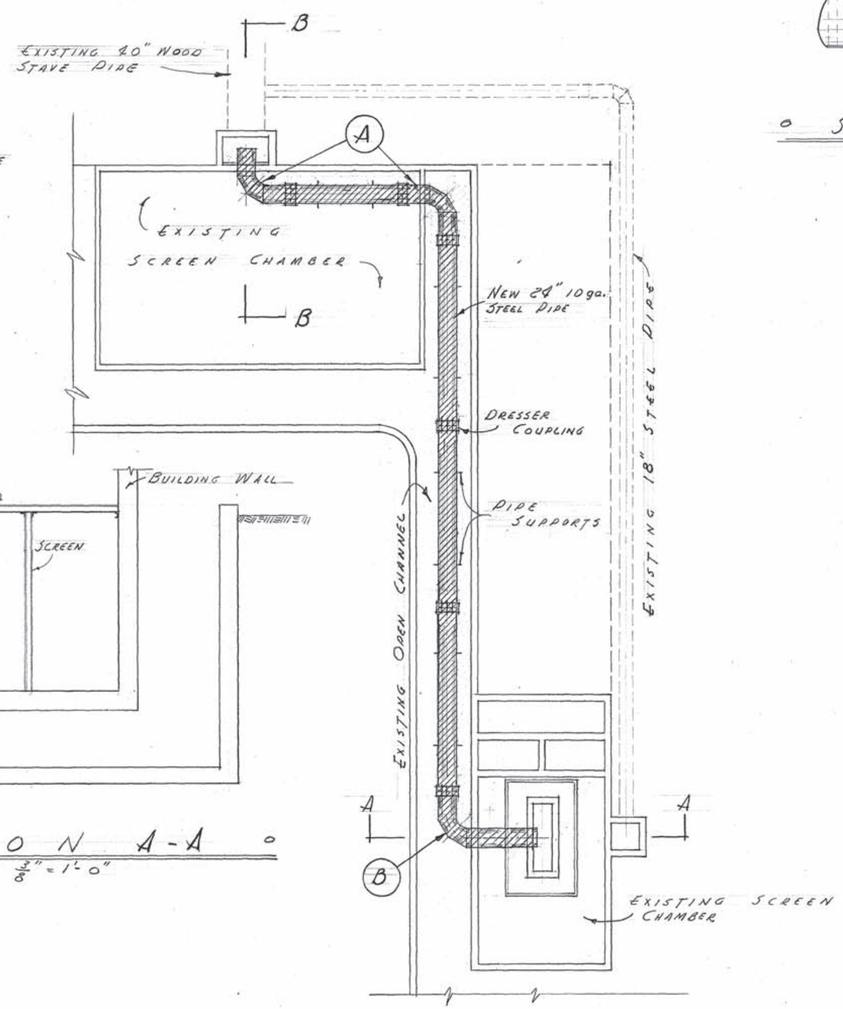

PLAN
SCALE 3/8" = 1'-0"

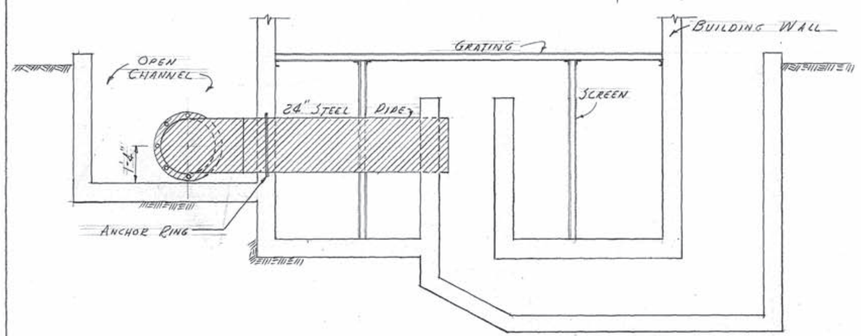

SECTION A-A
SCALE 3/8" = 1'-0"

NOTES
REMOVE EXISTING CONCRETE WHERE NECESSARY
GROUT PIPES SOLID AFTER INSALLATION

FOR INFORMATION ONLY

REVISIONS | DATE | BY

UNITED STATES DEPARTMENT OF THE INTERIOR
FISH AND WILDLIFE SERVICE
BUREAU OF SPORT FISHERIES AND WILDLIFE
BRANCH OF ENGINEERING

SUPERVISING ENGINEER: Arthur Sibley
REGIONAL ENGR.
REVIEWED: E.M.J.
RECOMMENDED: Henry Bartholy
REGIONAL DIRECTOR
W.O. APPROVAL DATE

LEAVENWORTH
FISH CULTURAL STATION
SCREEN CHAMBER
PIPING MODIFICATION
CHELAN CO. WASHINGTON

SURVEYED | DESIGNED TR | DRAWN D.B.B. | CHECKED TR.
DATE: SEPT. 24, 1959.
PORTLAND, OREGON
DWG. NO. 1F-WN.-38 - 25.0

SHEET 1 OF 1

Cross–Sectional View of Concrete Cylinder Pipe (CCP)

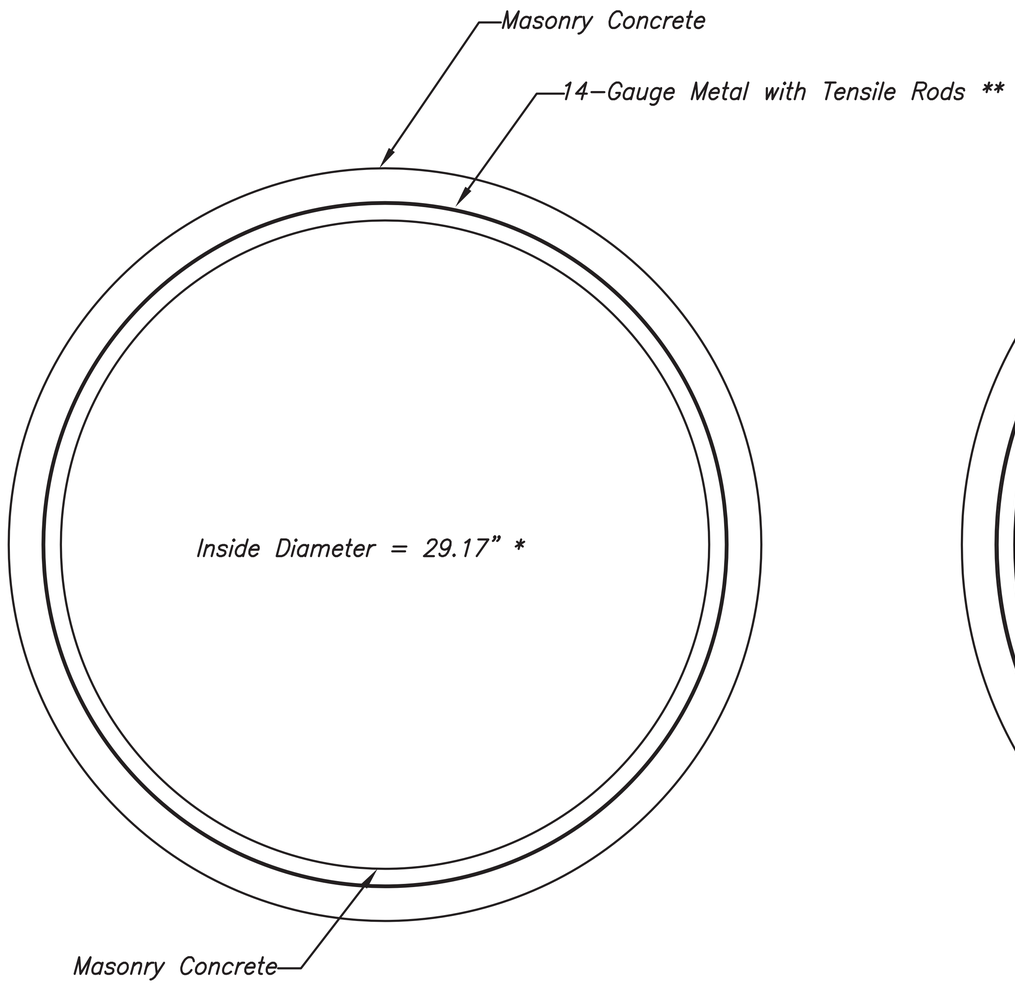

Outside diameter of CCP is 860 millimeters – converted to inches (33.86")

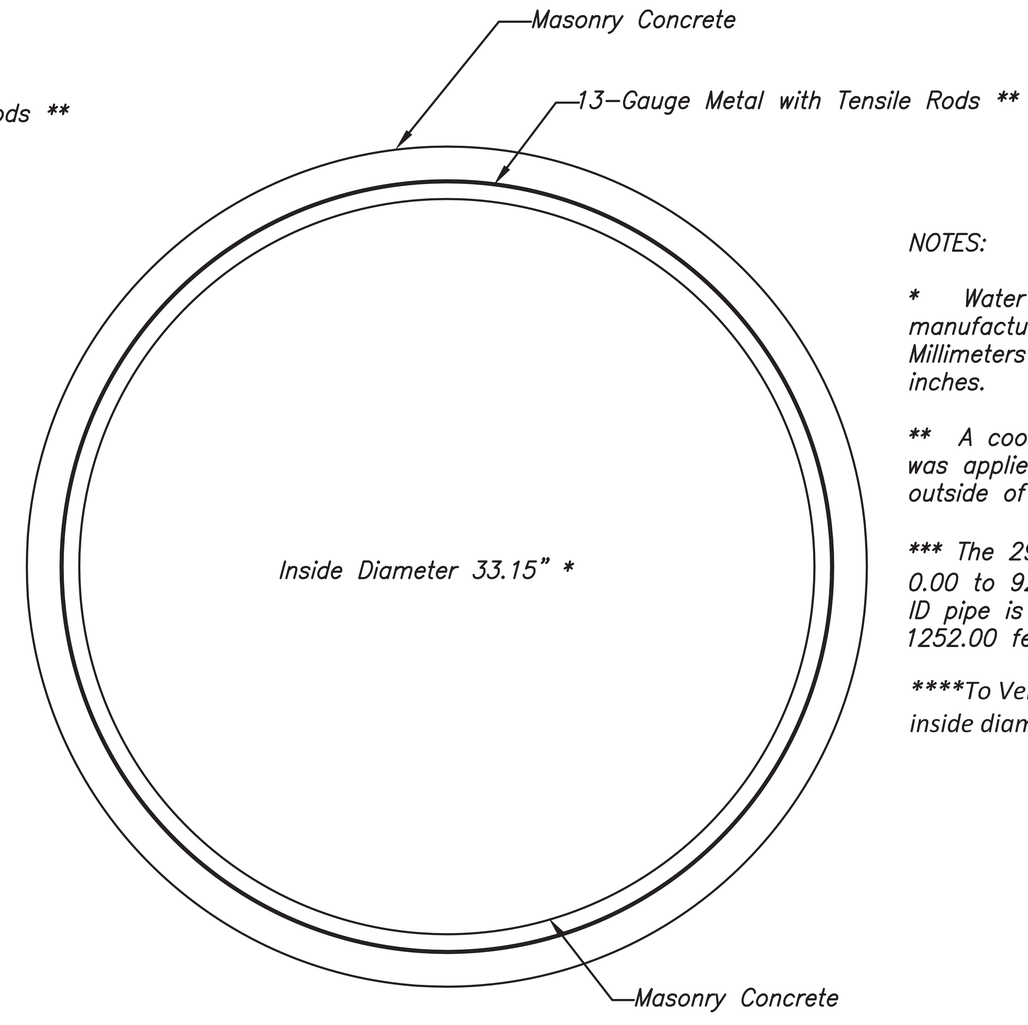

Outside diameter of CCP is 960 millimeters – converted to inches (37.80")

NOTES:

* Water supply line pipe was manufactured in millimeters. Millimeters were converted to inches.

** A cool–tar epoxy coating was applied to both inside and outside of metal pipe.

*** The 29.17" ID pipe is from 0.00 to 929.00 feet. The 33.15" ID pipe is from 929.00 to 1252.00 feet.

****To Verify in Field (VIF) inside diameters shown.

FOR INFORMATION ONLY

ALWAYS THINK SAFETY

CROSS–SECTIONAL VIEW OF 34– AND 38–INCH WATER SUPPLY LINE PIPE
LEAVENWORTH FISH HATCHERY,
LEAVENWORTH, WASHINGTON

VIDEO INSPECTION – APRIL 30 AND MAY 1, 2008

222-D-60313

SHEET 1 OF 1 2008, MAY 9

FIGURE 1

RECLAMATION
Managing Water in the West

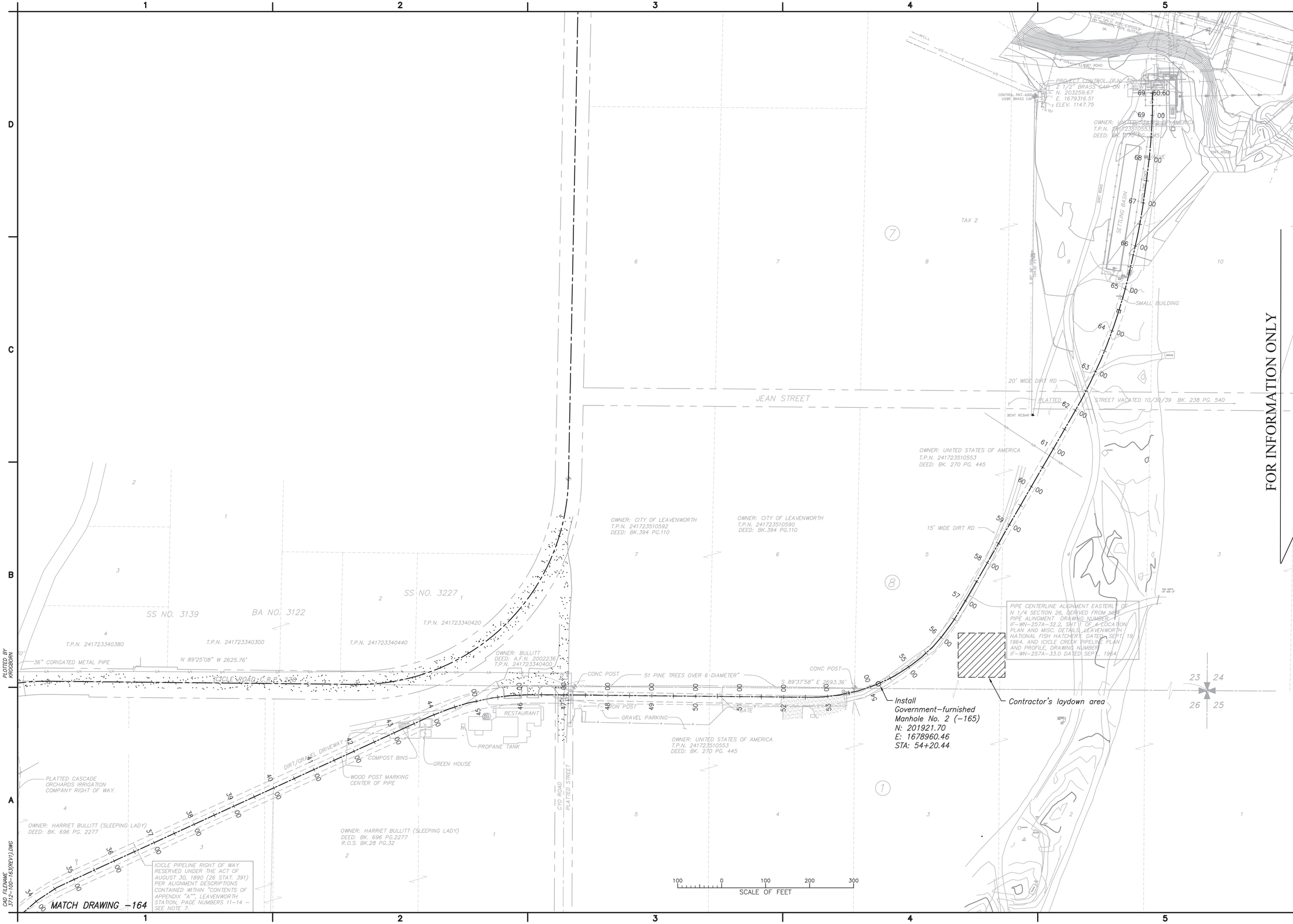

FOR INFORMATION ONLY

ALWAYS THINK SAFETY

U.S. DEPARTMENT OF THE INTERIOR
BUREAU OF RECLAMATION

LEAVENWORTH FISHERIES COMPLEX
U.S. FISH AND WILDLIFE SERVICE - WASHINGTON

LEAVENWORTH NATIONAL FISH HATCHERY

WATER PIPE INSPECTION
PIPELINE PLAN

REV. NO.		
1	2011-10-30 DENNIS HAWKINS P.E.	Modified text to specify Government-furnished materials.

DESIGNED	K. Ogborn
DRAWN	A. Rosenberg
CHECKED	G.M. Torrez
TECH. APPR. (NAME, PROF. ABBR.)	Dennis Hawkins, P.E.
ADMIN. APPROVAL NAME: TITLE	Dave Jennings
BOISE, ID	2010-10-27

PIPELINE PLAN

3712-100-163

SHEET 1 OF 1

DATE AND TIME PLOTTED NOVEMBER 4, 2011 13:59
PLOTTED BY KROGBORN

CAD SYSTEM AutoCAD Rel. 18.1s
CAD FILENAME 3712-100-163(REV1).DWG

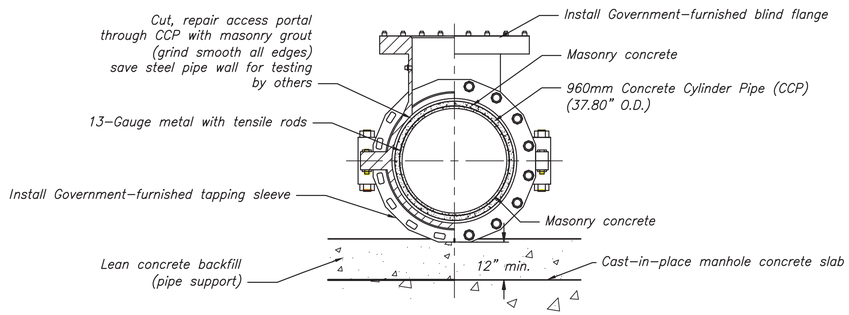

DETAIL 1

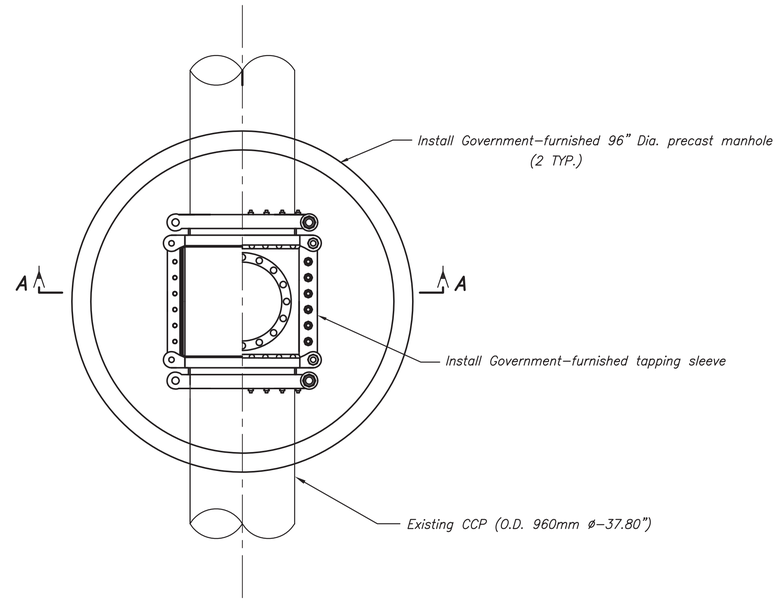

PLAN

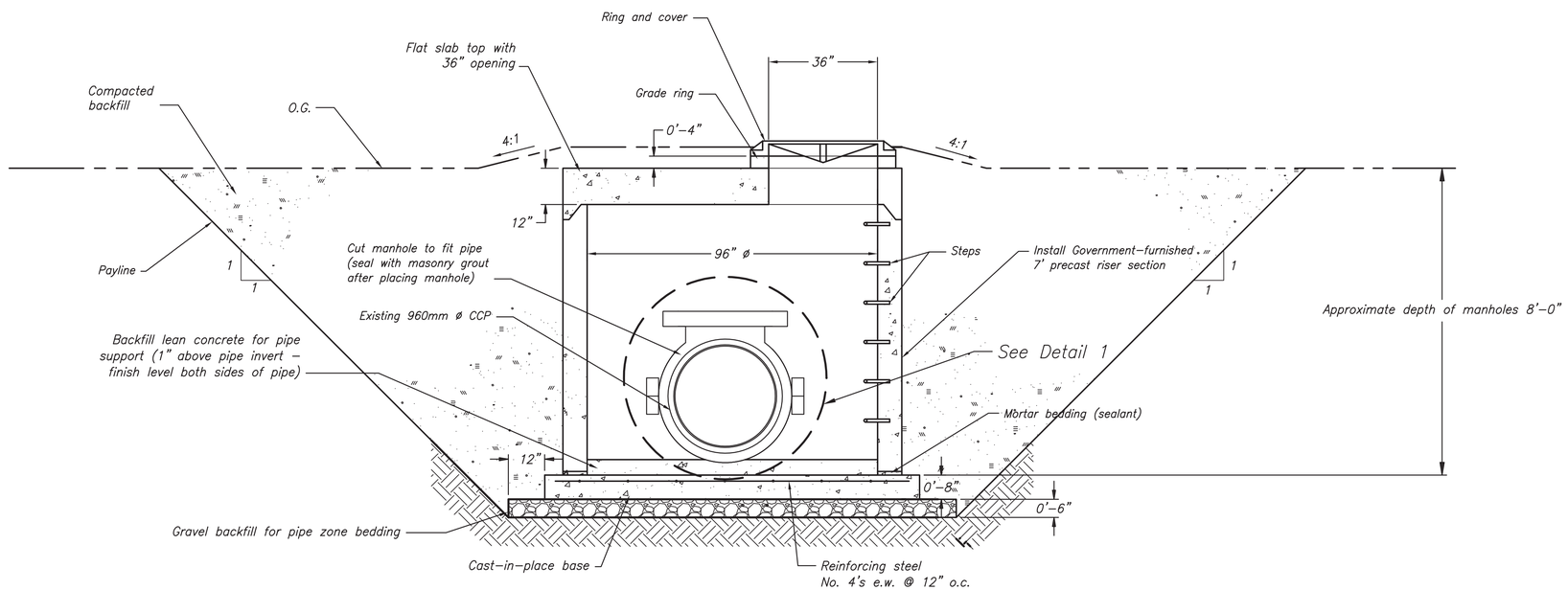

SECTION A–A
(2 TYPICAL)

NOTE:
Reference Drawings 3712–100–163 & 164 for manhole locations.

2 0 2 4 6
SCALE OF FEET

FOR INFORMATION ONLY

RECLAMATION
Managing Water in the West

ALWAYS THINK SAFETY

U.S. DEPARTMENT OF THE INTERIOR
BUREAU OF RECLAMATION
LEAVENWORTH FISHERIES COMPLEX
U.S. FISH AND WILDLIFE SERVICE – WASHINGTON

LEAVENWORTH NATIONAL FISH HATCHERY
WATER PIPE INSPECTION
MANHOLE AND PIPE SADDLE DETAILS

REV NO		
3	2011–10–19 DENNIS HAWKINS P.E. DENNIS HAWKINS P.E.	100 Modified text to specify Government–furnished materials. Added text for testing of concrete and removed text specifying reinforcement.
2	2011–08–04 DAVE JENNINGS P.E. DAVE JENNINGS P.E.	100 Modified depth of manholes.
1	2011–12–20 DAVE JENNINGS P.E. DAVE JENNINGS P.E.	100 Removed eccentric section and changed base to a 7" section. Added a 4" grade ring and flat slab top with 36" opening.

DESIGNED K. Ogborn
K. Ogborn/J.E.T.
DRAWN G.M. Torrez
CHECKED Dennis Hawkins, P.E.
TECH. APPR. NAME, PROF. ABBR.
ADMIN. APPROVAL Dave Jennings
NAME
TITLE
BOISE, ID 2010–11–15

DETAILS

3712–100–165

SHEET 1 OF 1

DATE AND TIME PLOTTED NOVEMBER 4, 2011 14:03
PLOTTED BY KROGBORN

CAD SYSTEM AutoCAD Rel. 18.1s
CAD FILENAME 3712–100–165_3.DWG

FIGURE 1

GROUNDING METAL CONDUITS

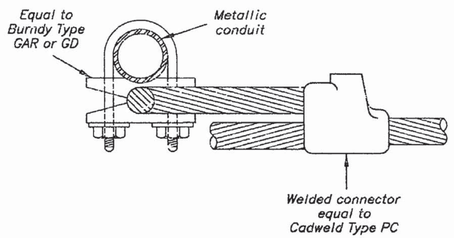

METAL CONDUIT GROUNDING TABLE			
CONDUIT SIZE	MINIMUM SIZE OF GROUND CABLE	NUMBER OF TAPS	CLAMP SIMILAR TO BURNDY TYPE
¾" to 1½"	No.4 A.W.G.	1	GAR
2" to 3"	No.1 A.W.G.	1	GAR
Above 3"	No.1 A.W.G.	2	GD

FIGURE 2

BONDING CONDUITS AT EXPANSION JOINTS

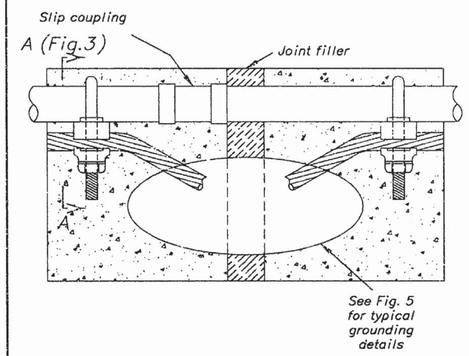

NOTE

CLAMPS SHALL BE EQUAL TO BURNDY TYPE GAR OR GD AND BARE COPPER CABLE IN ACCORDANCE WITH THE TABLE IN FIGURE 1 OR A BONDING JUMPER EQUAL TO O.Z. TYPE BJ (WITH BRONZE FITTINGS) MAY BE USED.

FIGURE 3

BONDING CONDUITS AROUND JUNCTION BOXES

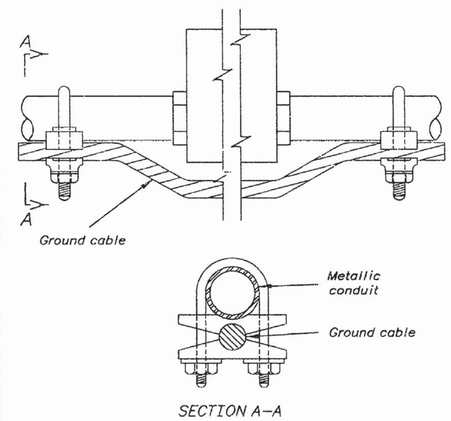

NOTE

CLAMPS SHALL BE EQUAL TO BURNDY TYPE GAR OR GD AND BARE COPPER CABLE IN ACCORDANCE WITH THE TABLE IN FIGURE 1 OR A BONDING JUMPER EQUAL TO O.Z. TYPE BJ (WITH BRONZE FITTINGS) MAY BE USED.

NOTES

1. Ground cables for connection to equipment shall be of sufficient length to bolt to equipment when ultimately installed. Terminations as shown in Figure 4 Dwg 40–D–4334 shall be used in lieu of stubouts. Approximate locations only are shown on drawings. Exact locations to be determined in field.
2. Refer to conduit drawings or general arrangement drawings whenever available, for more exact location of equipment.
3. Metal conduits shall be grounded at both ends. If a break occurs in a run of metal conduit, the conduit shall be bonded across the break. In case the above is not feasible, the each section shall be grounded separately. Each contractor shall ground each metal conduit run, or portion therof, that he installs. Junction or pull boxes not containing protective equipment in which the conduits are installed with a locknut and bondnut shall not be considered a break when the voltage is below 240 volts to ground, but shall be so considered for higher voltages. All junction or pull boxes in runs of non–metallic conduit shall be individually grounded. All boxes containing overload protective devices shall be individually grounded.
4. Ground cable shall be No.4 A.W.G. or larger.
5. All paint, enamel, and scale shall be removed from point of contact on metal surfaces before applying ground connections.
6. All bolts, machine screws, nuts and washers used in making grounding connections shall be silicon bronze.
7. Cable shields and one conductor of multiconductor cable shall be grounded at both ends.
8. Thermoweld, Cadweld, or an approved equivalent process shall be used in making connections between cables where embedded in concrete, direct buried, or under plant superstructure.
9. Where Thermoweld, Cadweld, or an approved equivalent process is used it shall be performed with heavy duty welding equipment in accordance with manufacturer's instructions and the material shall be new fresh stock.
10. All ground connectors shall be UL listed. All below grade connectors to be in accordance with IEEE 837.

FIGURE 4

EMBEDDED GROUND CONNECTOR WITH EQUIPMENT GROUND CABLE

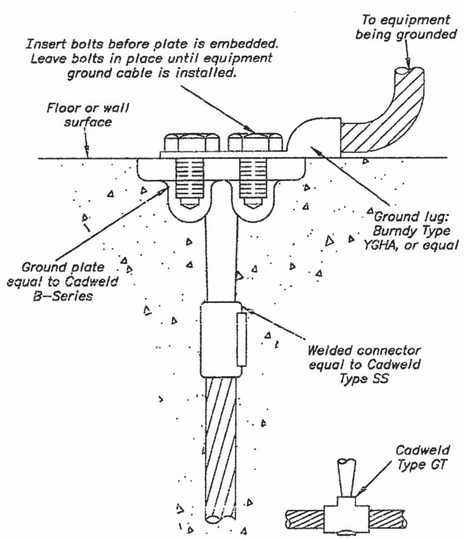

SIDE VIEWS

FIGURE 5

CROSSING EXPANSION AND CONTRACTION JOINTS WITH GROUNDING CABLE

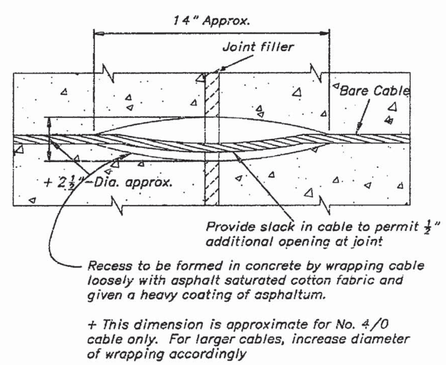

NOTE

THE CROSSING OF EXPANSION JOINTS WITH EMBEDDED GROUND CABLE SHOULD BE AVOIDED WHENEVER POSSIBLE. THE EMBEDDED GROUNDING SYSTEM FOR EACH UNIT OR BLOCK SHOULD BE SELF CONTAINED.

FIGURE 6

GROUNDING OF THREE PHASE BUS STRUCTURE

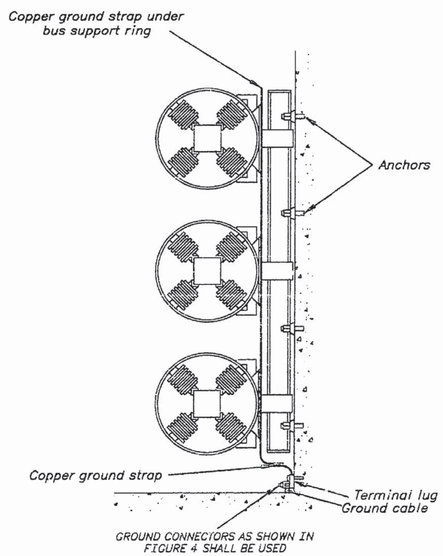

REFERENCE DRAWINGS

TYPICAL GROUNDING DETAILS (SHT 2 OF 2)	40–D–4335
SWITCHYARDS & SUBSTATIONS – GROUNDING DETAILS	40–D–4753
PLATFORM GROUNDING DETAILS	40–D–4874
CABLE TRENCH GROUNDING	40–D–6182
GROUNDING SUPPORTS ON TUBULAR STEEL STRUCTURES	40–D–6309
FENCE GROUNDING DETAILS	40–D–6376

REV. NO.		
3	2004–07–06 D – RBS	CHANGED NOTE 10, ADDED FIG.4 CONNECTOR REF., ADDED REF. DRAWINGS, OTHER MINOR REVISIONS.
1	1 – 10 – 00 D – L.G.	REDRAWN IN AUTOCAD R.14 FORMAT
	12 – 2 –85 D – G.D.O.	REVISED TO SHOW CURRENT PRODUCTS OR PRACTICES.

THIS DRAWING SUPERSEDES IN PART DRAWING 40–D–4336, 01–14–2003

ALWAYS THINK SAFETY

UNITED STATES
DEPARTMENT OF THE INTERIOR
BUREAU OF RECLAMATION

STANDARD DESIGNS

ELECTRICAL INSTALLATION

TYPICAL GROUNDING DETAILS

DRAWN R.Y.N. – S.J.S. SUBMITTED D. CLARK
TRACED J. M. H. RECOMMENDED H. H. PLUMB
CHECKED V.N.P. – R.F.H. – T.J.L. APPROVED L. N. McCLELLAN
ACTING CHIEF ENGINEER

DENVER, COLORADO MAY 1, 1947 SHEET 1 OF 2 40–D–4334

CAD SYSTEM AutoCAD R14.0b
CAD FILENAME 40–D–4334.DWG
DATE AND TIME PLOTTED JUNE 30, 2004 15:18
PLOTTED BY DCMWTOR

FIGURE 1

GROUND MATS

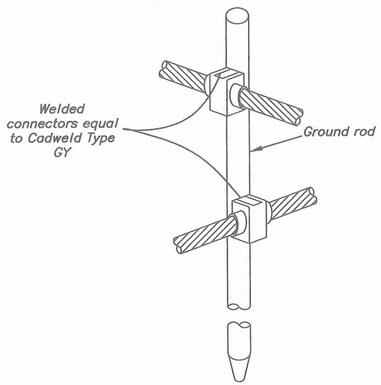

GROUND ROD DETAILS

FIGURE 2

GROUND MATS

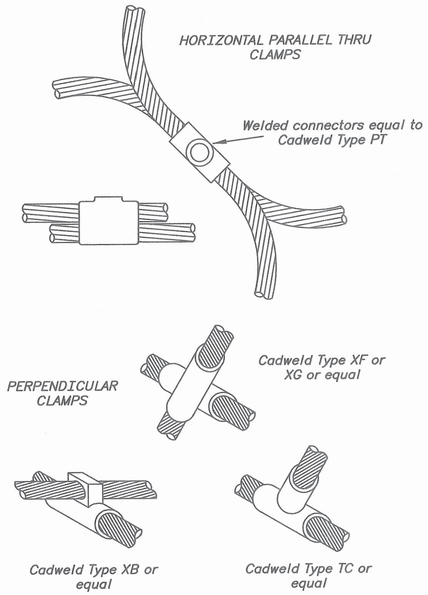

FIGURE 3

LIGHTING OR MISC POWER CABINETS

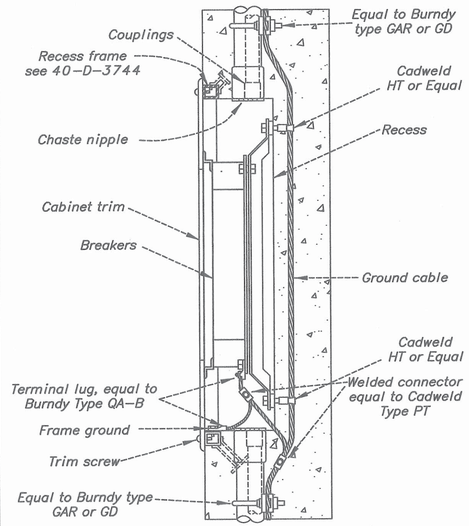

SECTIONAL ELEVATION

FIGURE 4

RAILS

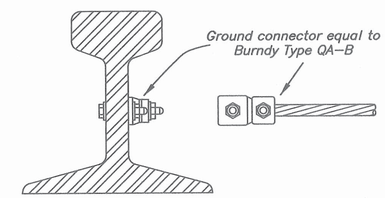

EXPOSED INSTALLATION

CONNECTION TO RAIL

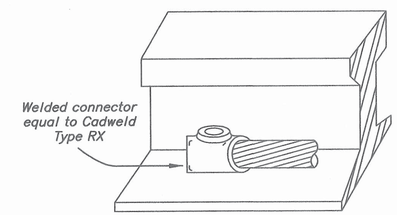

EMBEDDED INSTALLATION

CONNECTION TO RAIL

NOTES

1. See drawing 40-D-4334 for notes and list of reference drawings.

GROUND SYMBOLS

(Used on Plan Drawings)

- Indicates ground cable embedded in concrete
- Indicates ground cable concealed but not embedded in concrete
- Indicates ground cable exposed
- Indicates ground rod
- Indicates ground connection
- Indicates ground cable riser
- Indicates embedded ground plate

FIGURE 5

FLOOR FRAMES

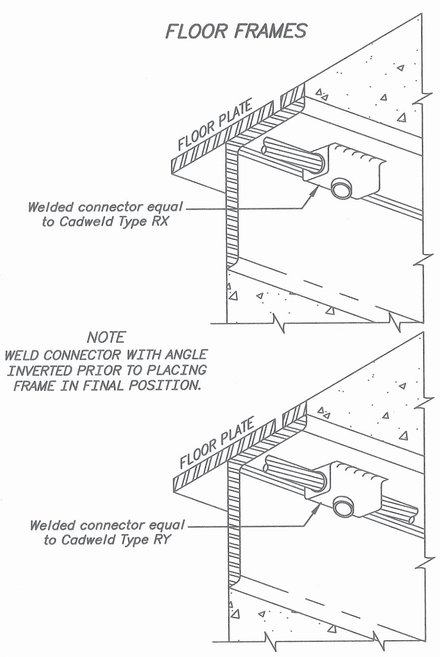

NOTE
WELD CONNECTOR WITH ANGLE INVERTED PRIOR TO PLACING FRAME IN FINAL POSITION.

FIGURE 6

RAILING POST BASES AND HANDRAIL SUPPORTS

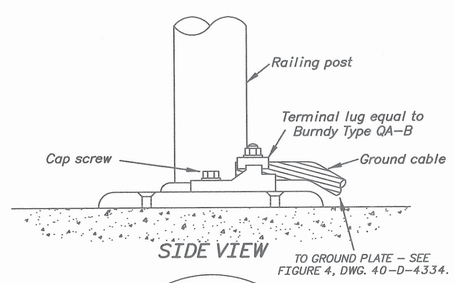

SIDE VIEW

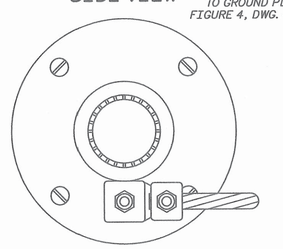

PLAN VIEW

CONNECTION TO RAILING POST BASE

(DETAILS FOR GROUNDING HANDRAIL SUPPORTS ARE SIMILAR)

FIGURE 7

OIL TANK GROUNDING DETAILS

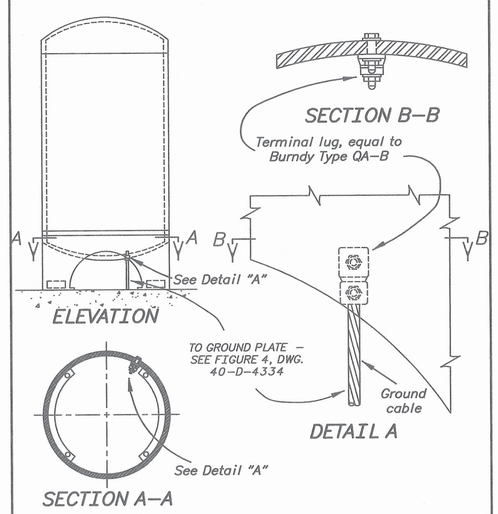

ELEVATION

SECTION A-A

DETAIL A

FIGURE 8

CONTROL CABLE SHIELD

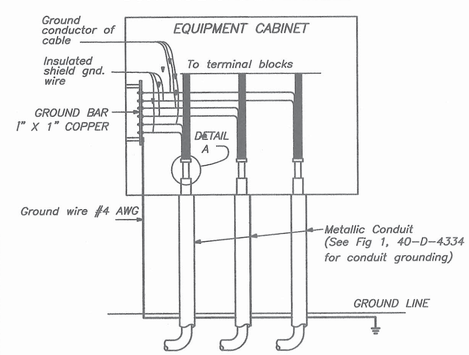

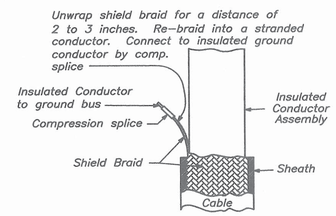

DETAIL A

LONGITUDINAL CABLE SECTION

REFERENCE DRAWINGS

ELECTRICAL INSTALLATION – TYPICAL GROUNDING DETAILS (SHT 1 OF 2) 40-D-4334

REV NO		
3	2004-07-06 D - RWB	MINOR REVISIONS; ADDED FIG.'S 2 AND 8.
3 - 10 - 00 D - L.G.		REDRAWN IN AUTOCAD R.14 FORMAT
12 - 2 -85 D - G.D.O.		REVISED TO SHOW CURRENT PRODUCTS OR PRACTICES.

THIS DRAWING SUPERSEDES DRAWING 40-D-4336 IN PART (2003-01-14); AND DRAWING 104-D-944 (2004-07-06)

ALWAYS THINK SAFETY

UNITED STATES
DEPARTMENT OF THE INTERIOR
BUREAU OF RECLAMATION

STANDARD DESIGNS

ELECTRICAL INSTALLATION

TYPICAL GROUNDING DETAILS

DRAWN R.Y.N. – S.J.S. SUBMITTED D. CLARK

TRACED J. M. H. RECOMMENDED H. H. PLUMB

CHECKED V.N.P. – R.F.H. – T.J.L. APPROVED L. N. McCLELLAN
ACTING CHIEF ENGINEER

DENVER, COLORADO APRIL 24, 1947 SHEET 2 OF 2

40-D-4335

CAD SYSTEM AutoCAD Rel. 16.0a
CAD FILENAME 40-D-4335.DWG
DATE AND TIME PLOTTED JUNE 30, 2004 16:31
PLOTTED BY DCRAWFOR

DEC 01 2004

FIGURE 1

GROUNDING TO FLAT SURFACE

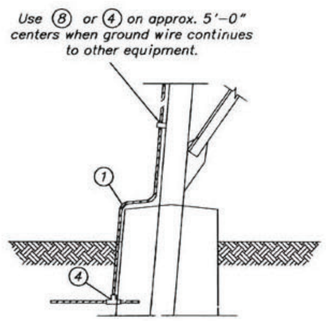

FIGURE 2

GROUNDING TO FENCE POST OR PIPE-TYPE SWITCHYARD LIGHTING POLE

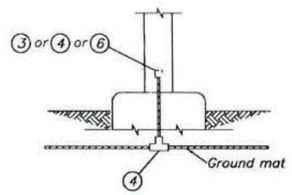

OPTION A

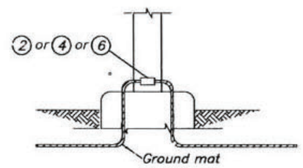

OPTION B

FIGURE 3

GROUNDING TO CABLE TRENCH OR RACK

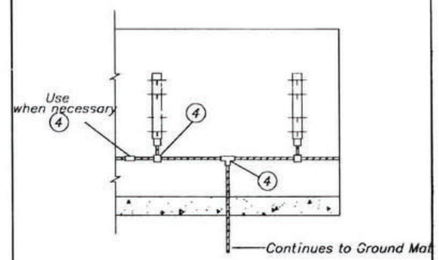

FIGURE 4

GROUNDING TO TUBULAR STEEL STRUCTURE

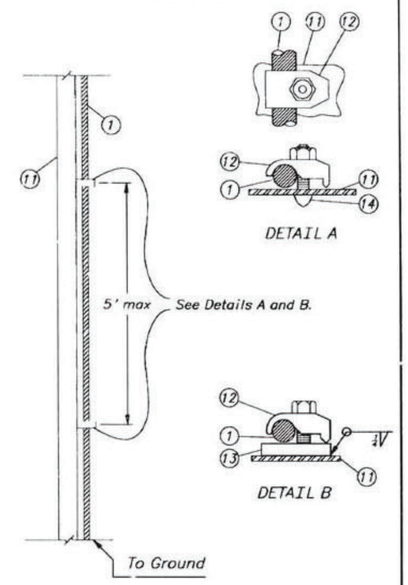

LIST OF MATERIALS

ITEM NO.	DESCRIPTION
1	Copper cable, bare, 4/0 AWG minimum
2	Bolted ground connector similar to Burndy type GB
3	Bolted ground clamp similar to Penn-Union type GWL
4	Exothermic welded ground connector similar to Cadweld or ThermOweld
5	Bolt: 1/2" silicon-bronze with nut and lock washer. Length as required for Item 8.
6	Bolted ground connector similar to Burndy type GAR
7	Compression-type ground connector
8	Cable to flat bar connector similar to Burndy QA or CB
9	Ground rod, 10'x3/4", copper-clad steel
10	Copper-clad steel stranded cable, bare, 7 No. 5
11	Tubular steel structure
12	Bolted ground connector similar to Burndy type GBM
13	Steel plate, 1-inch thick (Notes 5, 7)
14	3/8" stud, power driven (Note 6)
15	Copper-clad steel stranded cable, bare, 7 No. 9

NOTES

1. See drawing 40-D-4334 for general notes and list of reference drawings.
2. See drawing 40-D-4335 for typical ground system symbols.
3. All ground cables to be stubbed out approx. where indicated on plan drawings and be of sufficient length to bolt to equipment.
4. Ground all metal gates or each half of all double gates to the gate post with flexible metal braid installed across gate hinges.
5. Steel plate size to be larger than projected area of clamp.
6. Power driven stud equal to Ramset Fastening System as manufactured by Illinois Tool Works, Wood Dale, IL.
7. Plate to be welded to structure and be drilled and tapped for a 1/8" US standard bolt.
8. All grounding connections shall be as close as possible to the fence post.
9. Weave ground cable thru fencing and attach to fence with at least three (3) connectors

FIGURE 5

GROUND ROD CONNECTIONS

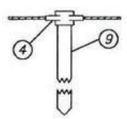

OPTION A

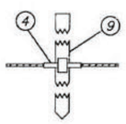

OPTION B

FIGURE 6

GROUNDING TO CABLE TUNNEL CABLE TRAYS

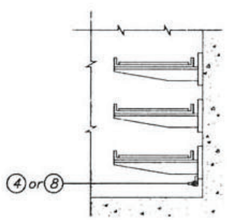

FIGURE 7

GROUNDING TO STRUCTURE BASES

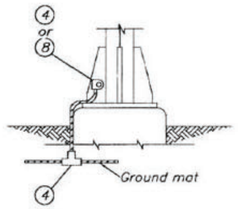

TYPICAL PIPE BUS SUPPORT OR PIPE TIE DOWN CONNECTION

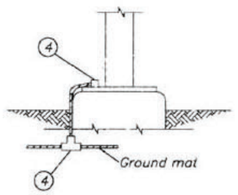

TYPICAL GROUNDING TO TUBULAR STRUCTURE

FIGURE 8

FENCE GROUNDING

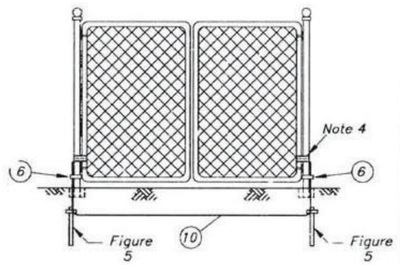

GATE AND FENCE POSTS

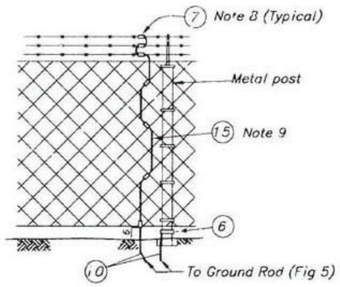

CHAIN LINK FENCING AND POST

REFERENCE DRAWINGS

TYPICAL GROUNDING DETAILS (SHT 1 OF 2)	40-D-4334
TYPICAL GROUNDING DETAILS (SHT 2 OF 2)	40-D-4335

THIS DRAWING SUPERSEDES DRAWING 40-D-6309, 2004-09-30 IN PART

REV. NO.		
4	2004-09-30 D-J.R.Z.	ADDED FIGURES 4 AND 8; RENUMBERED FIGURES ACCORDINGLY; ADDED NOTES 8 & 9; ADDED ITEMS 7 & 15.
3	2004-07-06 D-J.R.Z.	ADDED ITEMS 2 & 3 TO FIG. 2 AND GROUND CABLE SIZE (ITEM 1); REPLACED 'DETAIL' VIEWS w/ 'FIGURES'; OTHER MINOR REVISIONS.
	3-8-00 D-L.G.	REDRAWN IN AUTOCAD R.14 FORMAT
	04-20-70 D-G.W.C.	ADDED DETAIL H

ALWAYS THINK SAFETY

UNITED STATES
DEPARTMENT OF THE INTERIOR
BUREAU OF RECLAMATION

STANDARD DESIGNS

ELECTRICAL INSTALLATION

TYPICAL GROUNDING DETAILS
FOR SWITCHYARDS AND SUBSTATIONS

DRAWN J.L.L. - R.J.S. CHECKED B.H. PLUMB
TRACED L.W.G. RECOMMENDED O.L. RICE
CHECKED J.A.M. - D.C.M. - M.H.K. APPROVED L.N. McCLELLAN
CHIEF ENGINEER

DENVER, COLORADO SHEET 1 OF 1 APRIL 5, 1949 40-D-4753

CAD SYSTEM AutoCAD Rel. 16.0a
DWG. FORMAT 40-D-4753.DWG
DATE AND TIME PLOTTED DEC. 6BER 10, 2004 08:38
PLOTTED BY JSPATTER

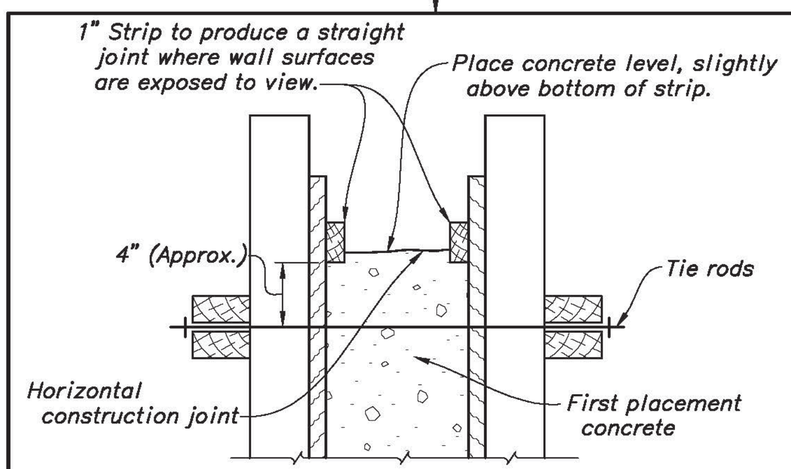

FORMS IN PLACE

FIRST PLACEMENT

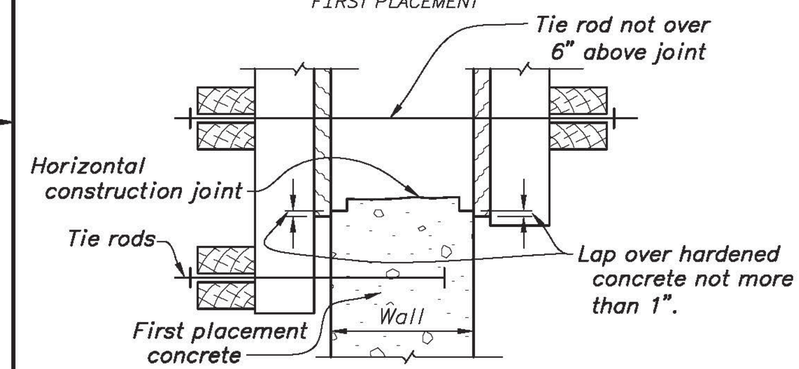

FORMS IN PLACE

SECOND PLACEMENT

NOTES

A 1" overlap produces a far tighter contact than a much larger overlap, and results in prevention of form spread with consequent offset at the joint.

DRAWING NOT TO SCALE

REV NO		
2	2006-08-15 D- J.W.	REDRAWN IN AUTOCAD.
	5-29-85 D - K.S.K.	REDRAWN AND DELETED V-GROOVE.

ALWAYS THINK SAFETY

UNITED STATES
DEPARTMENT OF THE INTERIOR
BUREAU OF RECLAMATION

STANDARD DESIGNS

BUILDINGS

METHOD OF BUILDING FORMS FOR SUCCESSIVE LIFTS

DESIGNED _____ TECHNICAL APPROVAL I.G. TAYLOR
DRAWN C.J. MELSON SUBMITTED J.R. DEXTER
CHECKED K.S. KUGE APPROVED G.A. ERICKSON
CHIEF STRUCT. & ARCH. BRANCH

AutoCAD Rel. 19.1s | 40-D-5246-RD-1.DWG

DENVER, COLORADO MAY 28, 1985

40-D-5246

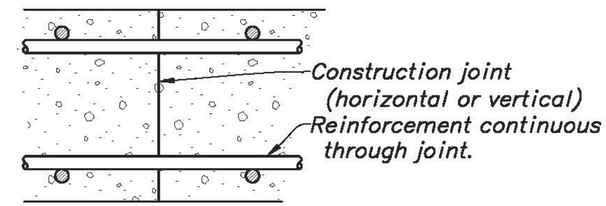

CONSTRUCTION JOINTS

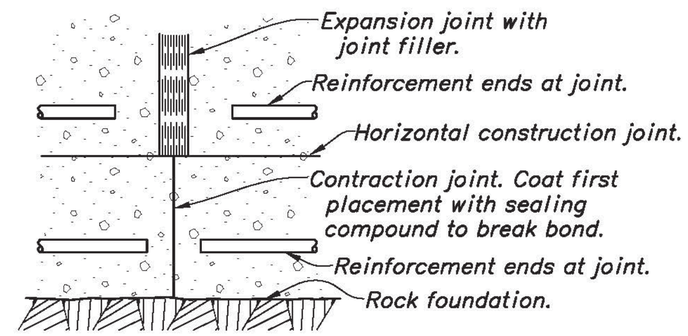

EXPANSION AND CONTRACTION JOINTS

NOTE

Construction joint keys and waterstops required if shown on construction drawings.

FORMERLY 103-D-219

REV NO		
2	2006-08-28 D - J.W.	REDRAWN IN AUTOCAD.
2-11-71 D - H.G.B.	DELETED "COPY" AND REFERENCE TO SEALS.	

ALWAYS THINK SAFETY

UNITED STATES
DEPARTMENT OF THE INTERIOR
BUREAU OF RECLAMATION

STANDARD DESIGNS

BUILDINGS

JOINTS IN CONCRETE STRUCTURES

DESIGNED H.H.B. SUBMITTED SAMUEL JUDD
TRACED C.A.R. RECOMMENDED K. B. KEENER
CHECKED N.A.A.-H.B. APPROVED W. E. BLOMGREN
ACT. CHIEF ENGINEER

CADD SYSTEM	CADD FILENAME	DATE AND TIME PLOTTED
AutoCAD Rel. 19.1s	40-D-5247-RD-1.DWG	FEBRUARY 4, 2015 09:57
DENVER, COLORADO	DECEMBER 4, 1962	40-D-5247

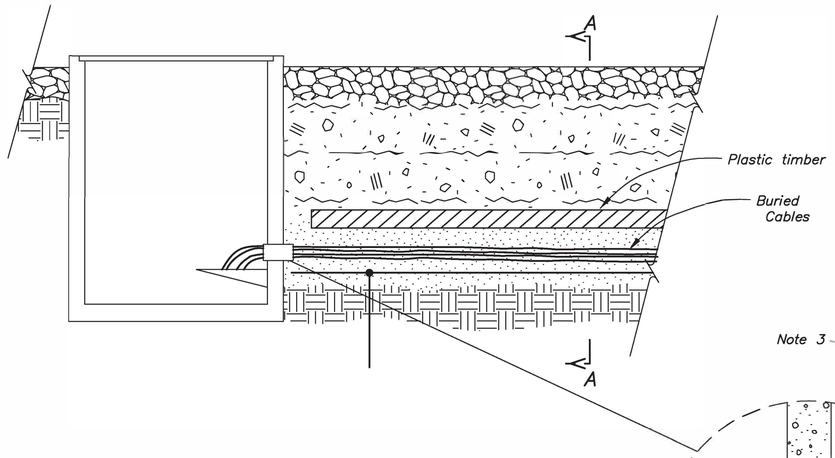

DETAIL A
Termination at Type 'A' & 'B' Cable Trenches

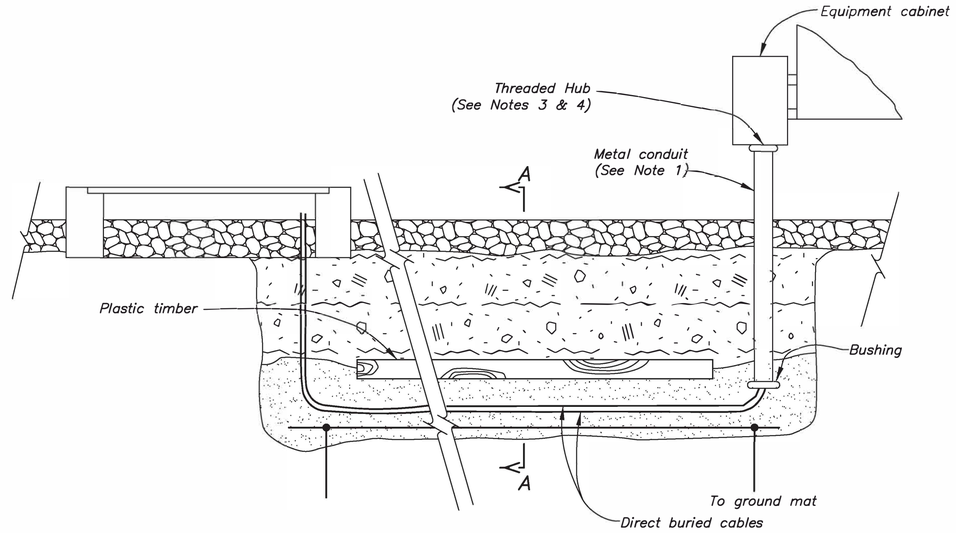

DETAIL B
Termination at Type 'C' Cable Trench

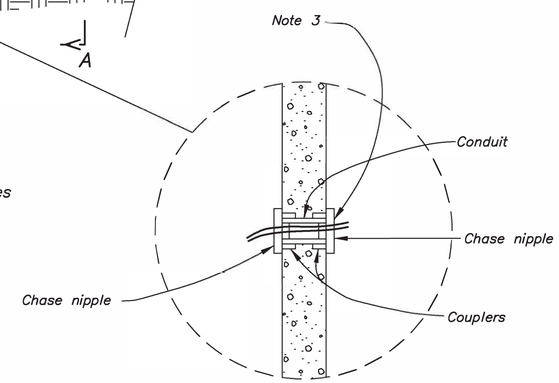

NOTES

1. Portion of conduit 6 inches above and all conduit below finished grade to be PVC–Coated type.
2. A bare copper cable shall be buried parallel with all cable runs at stations where shieled power cables are used. The copper cable size shall be the same as that of the main ground mat.
3. After cables are installed seal entrance with a sealing compound.
4. Crouse–Hinds Type HUB or equal.
5. Metal conduit shall be grounded in accordance with drawing 40–D–4334.
6. Clamping in accordance with drawing 40–D–7094.

REFERENCE DRAWINGS

TYPICAL GROUNDING DETAILS _ _ _ _ _ _ _ _ _ _ _ 40–D–4334
CABLE TRENCH – TYPES "A" & "B" – OUTLINE AND REINFORCEMENT _ _ _ _ _ _ _ _ _ _ _ _ _ 40–D–4632
CABLE TRENCH – TYPE "C" – OUTLINE AND REINFORCEMENT _ _ _ _ _ _ _ _ _ _ _ _ _ 40–D–5350
CONDUIT CLAMP AND SUPPORTS – TYPICAL DETAILS _ _ 40–D–7094

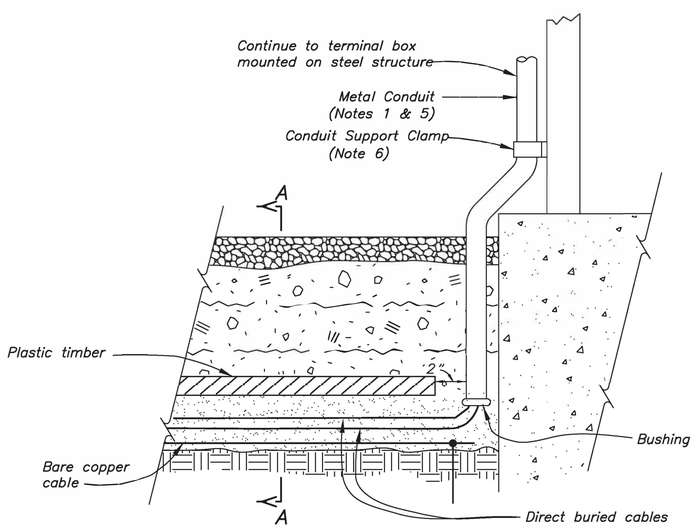

DETAIL C
Termination at Conduit Risers to Equipment.

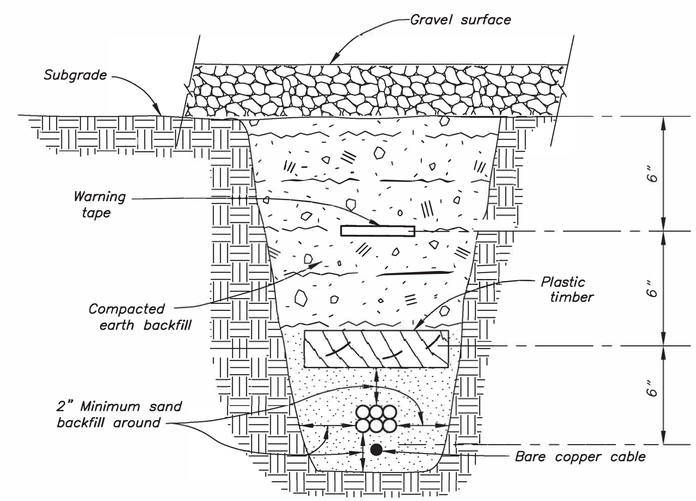

SECTION A–A

NOT TO SCALE

REV NO		
4	2008–03–10 D – T. L. W.	ADDED WARNING TAPE, EXTENDED CONDUIT RISER DEPTHS, OTHER MINOR REVISIONS. (–68430: D.R.C.)
3	2006–01–13 D – L. G., P.E.	REVISED TITLE BLOCK AND NOTE 1, ADDED NOTES 4 – 6, OTHER MINOR REVISIONS. (D–8440: D.R.C.)
	3 – 27 – 00 D – L.G.	REDRAWN IN AUTOCAD 14.
	10 – 28 – 92 D – L. G.	REVISED TIMBER PROTECTION.

ALWAYS THINK SAFETY

UNITED STATES
DEPARTMENT OF THE INTERIOR
BUREAU OF RECLAMATION

STANDARD DESIGNS

SWITCHYARDS AND SUBSTATIONS

ELECTRICAL INSTALLATION

BURIED INSULATED CABLES
TYPICAL DETAILS

DESIGNED _ _ W. J. C. _ _ _ _ _ _ _ SUBMITTED _ _ _ M. H. KIGHT _ _ _
DRAWN _ _ _ J. M. FIELDS _ _ _ _ RECOMMENDED _ _ K. B. KEENER _ _ _
CHECKED _ _ K. I. D. – D. O. M. _ _ APPROVED _ _ GRANT BLOODGOOD _ _ _
ASSOC. CHIEF ENGINEER

DENVER, COLORADO MAY 6, 1955
SHEET 1 OF 1

40–D–5370

CAD SYSTEM AutoCAD Rel. 16.2s
OLD FILENAME 40–D–5370 REV4.DWG
DATE AND TIME PLOTTED MARCH 11, 2008 15:54
PLOTTED BY DCRAWFORD

Released

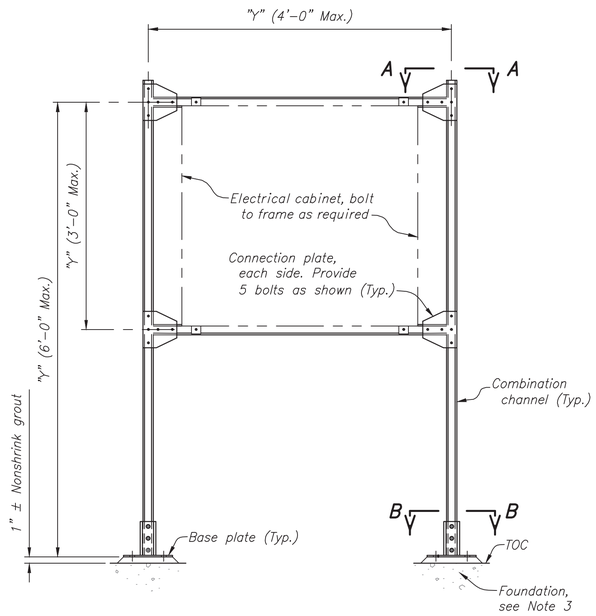

ELECTRICAL EQUIPMENT SUPPORT, TYPE I

(Est. Wt. 135 lbs.)

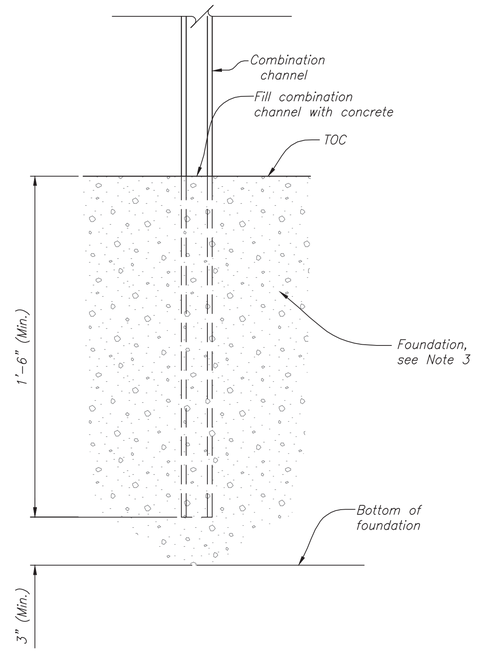

ALTERNATE ANCHORAGE DETAIL

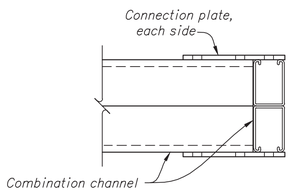

VIEW A–A

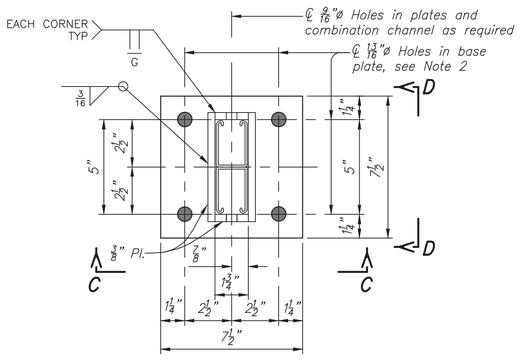

SECTION B–B

BASE PLATE DETAIL

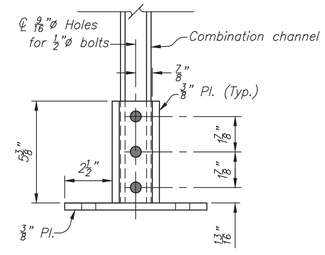

VIEW C–C

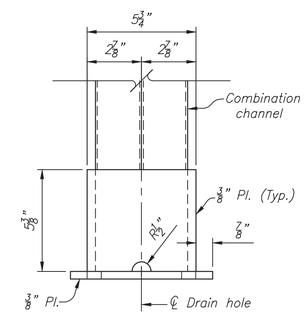

VIEW D–D

DESIGN CRITERIA

Electrical equipment support is designed to withstand a three–second gust basic wind speed of 90 mph in accordance with ASCE 7–05. It is assumed that no electrical cabinets will be installed in lower portion of frame.

GENERAL NOTES

ASCE denotes American Society of Civil Engineers.

ASTM denotes American Society for Testing and Materials.

AWS denotes American Welding Society.

COR denotes Contracting Officer's Representative.

Max. denotes maximum.

Min. denotes minimum.

Pl. denotes plate.

TOC denotes top of concrete.

Typ. denotes typical.

All welds, sections and details are typical for all similar conditions.

Electro–galvanized finish combination channels.

Unless noted otherwise, galvanize base plate and plates after fabrication per ASTM A385.

Unless noted otherwise, galvanize hardware per ASTM A123.

Metal framing combination channels shall be as manufactured by Globe Strut, United Gypsum Corporation, 101 South Wacker Drive, Chicago, IL 60606; Unistrut Corporation, 3566O Clinton Street, Wayne, MI 48184; or Cooper B–Line, 509 West Monroe Street, Highland, IL 62249.

Combination Channels: Globe Strut No. G7612A, B–Line B12A, or Unistrut P5501; or equal, having the following essential characteristics: No. 12 gauge steel and channel 1 5/8–inch wide by 4 7/8–inch deep with 7/8–inch openings.

Connection Plates:
With five holes per Globe Strut G2057, B–Line B532, Unistrut P1726; or equal.
With seven holes per Globe Strut G2068, B–Line B334, Unistrut P1950; or equal.

Connection hardware shall be suitable for combination channel strut attachments.

Fabricated Metalwork:
Plates and bars_____ ASTM A36

Length of bolt threads per ASME B18.2.1 and thread class 2 free–fit, American National coarse–thread series.

Unless noted otherwise, make all welds continuous and in the shop.

Start and stop all welds at center of member or tubing.

Unless noted otherwise, fabricator shall determine edge preparation and root opening for groove welds. Shop detail drawing shall show edge preparation.

Arc–Welding Electrodes: Filler metal and required shielding gases or fluxes shall be per AWS D1.1 with filler metal for steel having a minimum tensile strength of 70,000 psi.

Unless noted otherwise, all bolted connection bolt holes are standard 1/16" oversize.

"Y" dimensions are the responsibility of the Contractor and are based on the electrical cabinet furnished.

NOTES

1. Contractor determines final size of electrical equipment support based on electrical cabinet furnished.
2. Unless noted otherwise, or as directed by the foundation design engineer, install 5/8"ø post–installed anchors with a minimum embedment of 6" or 5/8"ø cast–in–place threaded anchors with a minimum embedment of 1'–6" having a minimum projection of 2".
3. Foundation design engineer shall verify foundation stability, concrete and reinforcement strength requirements, and anchorage requirements.
4. Install electrical equipment supports at locations shown on specifications drawings and/or as directed by COR.
5. Estimated electrical equipment support weight shown is based on maximum dimensions and five hole connection plates.

RECLAMATION
Managing Water in the West

ALWAYS THINK SAFETY

U.S. DEPARTMENT OF THE INTERIOR
BUREAU OF RECLAMATION
STANDARD DRAWINGS

STANDARD AND TYPICAL DESIGNS

MISCELLANEOUS METALWORK

REV. NO.		
1	2015–04–14 Barthel, Rodney J P.E.	D MINOR MODIFICATIONS.

Bernard Lajimodiere
DESIGNED
RBarthel
DRAWN
Olaff G. Huerta
CHECKED
Barthel, Rodney J P.E.
TECH. APPR.
Bernstein, Alfred I P.E.
APPROVED
PEER REVIEWER – Plant Structures Group

DENVER, CO 2015–03–23

ELECTRICAL EQUIPMENT SUPPORT, TYPE I

SECTIONS AND DETAIL

40–D–60001

SHEET 1 1

DATE AND TIME PLOTTED APRIL 14, 2015 09:19
PLOTTED BY RBARTHEL

CAD SYSTEM AutoCAD Rel. 19.0s
CAD FILENAME 40–D–60001–R0–1.DWG

Released

ABBREVIATIONS

add'l = additional
bf = bottom face
bl = bottom layer
br = bottom row
CJ = Construction joint
℄ = Centerline
CL. = Centerline
clr. = clear
Cr.J = Contraction joint
Ct.J = Control joint
ctr. = center or centers
d_b = nominal diameter of reinforcing bar
Dwg. = Drawing
ec = each corner
ef = each face
EJ = Expansion joint
El. = Elevation
eq. = equal or equally
eq. spc. = equally spaced, equal spaces
er = each row
es = each side
ew = each way
ff = far face
fr = far row
fs = far side
HP = High point
if = inside face
ir = inside row
ℓ_d = development length
ℓ_{dh} = development length of standard hook
LP = Low point
ml = middle layer
mr = middle row
nf = near face
nr = near row
ns = near side
OCJ = Optional construction joint
of = outside face
or = outside row
spc. = spaced or spaces
Std. = Standard
tf = top face
tl = top layer
TOC = Top of concrete
tr = top row
TW = Tailwater
Typ. = Typical
uv = uniformly varying lengths of bars between lengths shown
VCJ = Vertical construction joint
WP = Working point
WS = Water surface, Waterstop

CONCRETE SYMBOLS

The different concrete placements are indicated by the following symbols:

Concrete - First stage
Concrete - Second stage
Concrete - Blockout
Concrete - Existing or in adjacent structures
Grout

NOTES TO DESIGNERS AND DETAILERS

1. Splice lengths shown in TABLES 3.0-60 thru 5.0-60 on 40-D-60004 are for Class B tension lap splices in accordance with ACI 318 and ACI 350. Assumed conditions for these tables in addition to the requirements shown on this drawing are uncoated reinforcement, normal weight concrete, and the transverse reinforcement index (K_{tr}) equal to zero. Splices or development lengths other than those shown in the tables must be detailed on the reinforcement specifications drawings.
2. Some factors which require additional consideration are: Beams or columns with ties, lightweight aggregate concrete, epoxy-coated reinforcement, excess reinforcement, bars in compression, bundled bars, and special seismic provisions.
3. The minimum centerline to centerline bar spacing requirements shown in TABLES 3.0-60 thru 5.0-60 on 40-D-60004 may not be applicable when using the provisions of ACI 350 Section 10.6 for distribution of flexural reinforcement to control flexural cracking.
4. Recalculation of lap splice lengths and development lengths by the designer may be required for changes in combinations of controlling variables per ACI 318 Section 25.4, or ACI 350 Section 12.2.
5. Lap splices and development lengths for horizontal bars in walls are designated as top bar splices and development lengths unless otherwise noted or detailed on the reinforcement specifications drawings.
6. Development lengths for deformed bars in tension terminating in a standard hook shall be calculated by the designer in accordance with ACI 318 Section 25.4.3.1 or ACI 350 Section 12.5. In cases where a restricted member thickness does not allow for the full development length of a standard hook, the designer shall use a reduced tensile capacity.

CONCRETE OUTLINE GENERAL NOTES

CHAMFER :
Chamfer edges of permanently exposed concrete surfaces, except slabs and top edges of curbs, with a 45° bevel, $\frac{3}{4}$" x $\frac{3}{4}$", unless otherwise shown on the specifications drawings.

CONCRETE PLACEMENT :
Before placing concrete, see specifications and manufacturer's drawings, for all embedded material which is required in the placement.

DIMENSIONS :
All dimensions to a joint are to the centerline of the joint unless otherwise shown.
Dimensions to beams, columns, and walls are from reference lines or other control points.
Beam and slab depths shall be measured from the top of the structural slab.
Dimensions given for the depth of recesses are from the surface of the structural concrete.
Thicknesses shown for walls and slabs placed against soil or rock are minimum dimensions.

EMBEDDED MATERIALS :
Before placing concrete, care shall be taken that all embedded items are in position and securely fastened in place. Anchor bolt locations and settings are shown on the structural steel, miscellaneous metal, concrete, and equipment drawings. Conduits and grounding cables are shown on the manufacturer's drawings and the electrical drawings. All projecting items, including waterstops, shall be supported and protected from damage and exposure.

FINISHES :
For location and classes of finishes for formed and unformed concrete surfaces, see the specifications drawings and/or paragraphs.

JOINTS :
All construction joints, identified as CJ, shall be provided where shown on the drawings. All optional construction joints, identified as OCJ, are to reduce the volume of placements or to facilitate construction. If optional joints are provided they shall be only at the locations shown. Relocation, addition, or elimination of construction joints will be subject to approval.

TOOLED EDGES :
Tool exposed edges of slabs and top edges of curbs to a radius of $\frac{1}{4}$", unless otherwise shown on the specifications drawings.

REINFORCEMENT GENERAL NOTES *(See Note 4)*

ACCESSORIES :
Bar supports, spacers, and other accessories are not shown on the design drawings. The recommendations of the ACI Detailing Manual-2004 (SP-66), or other approved supporting systems shall be used.

CODE AND DETAILING REFERENCES :
ACI Building Code Requirements for Structural Concrete (ACI 318-14).
ACI Detailing Manual-2004 (SP-66).
ACI Code Requirements for Environmental Engineering Concrete Structures (ACI 350-06).

COVER :
Place the reinforcement so that the clear distance between face of concrete and nearest reinforcement is 2" for #8 bars and smaller, and 3" for #9 bars thru #11 bars, unless otherwise shown on specifications drawings. Provide 3" clear distance from face of concrete for all bars when concrete exposure is cast against and permanently in contact with the ground. For corner bars cover, see ADDITIONAL REINFORCEMENT OPENINGS AND RECESSES, SECTION A-A on 40-D-60004. Clear distance is to the design dimension line.
Reinforcement parallel to construction joints shall have a minimum of 2" clear cover.

DIMENSIONS :
Dimensions are to the centerline of the bars except for embedment of hooks, which are dimensioned to the outside of the bar.
Clear cover dimensions are marked "clr." and are dimensioned to the outside of the bar.

PLACING :
Reinforcement at small openings (Max. 1'-6") in walls and slabs may be spread apart not more than 1.50 times the bar spacing.
Reinforcement shall be adjusted laterally to maintain a clear distance of at least 1" between the reinforcement and keys, waterstops, anchor bolts, form ties, conduits, and other embedded materials.
In heavily reinforced areas, relocation of the embedded material or cutting of reinforcement must be approved.
When bars are bent due to offsets less than 3" and recesses less than 3" deep, the slope of the inclined portion must not exceed 6 to 1.
Reinforcement parallel to anchor bolts or other embedded material shall be placed to maintain a clear distance of at least 1.33 times the maximum size aggregate.

PLAIN DOWELS :
Plain dowels across contraction joints shall be smooth bars uniformly coated with a film of oil before concrete placement.

REINFORCEMENT DOWELS :
Unless otherwise shown, dowels indicated on the drawing, such as #8(d), shall be embedded a length equal to ℓ_d and shall have a projection equal to that required for lap splicing to a bar of the same diameter.

SPACING :
The first and last bars in walls and slabs, stirrups in beams, and ties in columns are to start and end at a maximum of one half of the adjacent bar spacing. The minimum edge spacing shall be $2.5d_b$. For #9 thru #11 bars where minimum centerline bar spacing is 6" and the lap splice lengths requiring staggered placement shown in TABLES 3.0-60 thru 5.0-60 on 40-D-60004 are used, the minimum edge spacing shall be 3".

SPLICES :
The minimum length of lap for splicing parallel bars in tension shall be as given in TABLES 3.0-60 thru 5.0-60 on 40-D-60004.
Staggered lap splices shall be separated to give 12 inches clear between ends of adjacent splices.
Bars spliced by noncontact lap splices shall not be spaced transversely farther apart than one-fifth the required lap splice length, nor 6" on centers.
When reinforcing bars of different size are to be spliced, splice length shall be the larger of ℓ_d of larger bar and tension lap splice length of smaller bar.
Splices are to be made so that the required clear distances to face of concrete will be maintained.

STANDARD HOOKS FOR DEVELOPMENT OF DEFORMED BARS IN TENSION :
90-degree bend plus $12d_b$ extension at free end of the bar.
180-degree bend plus $4d_b$ extension, but not less than $2\frac{1}{2}$", at the free end of the bar.

STANDARD HOOKS FOR STIRRUPS, TIES, AND HOOPS :
#5 bar and smaller, 90-degree bend plus $6d_b$ extension, but not less than 3", at the free end of the bar.
#6, #7, and #8 bars, 90-degree bend plus $12d_b$ extension at the free end of the bar.
#8 bars and smaller, 135-degree bend plus $6d_b$ extension, but not less than 3", at the free end of the bar.
#8 bars and smaller, 180-degree bend plus $4d_b$ extension, but not less than 2.5", at the free end of the bar.

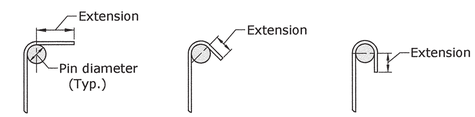

90-degree *135-degree* *180-degree*

TABLE OF PIN DIAMETERS (INCHES)

BAR NO.	3	4	5	6	7	8	9	10	11
Standard bends	$2\frac{1}{4}$	3	$3\frac{3}{4}$	$4\frac{1}{2}$	$5\frac{1}{4}$	6	$9\frac{1}{2}$	$10\frac{3}{4}$	12
Stirrups, tie bends and hoops	$1\frac{1}{2}$	2	$2\frac{1}{2}$	$4\frac{1}{2}$	$5\frac{1}{4}$	6			

SYMBOLS :
Bars shown thus:

#8@1-0 or #6@8

Indicate a group of the same size bars equally spaced.

An open circle at the end of a bar indicates a bend with the bar turned away from the observer.
A closed circle at the end of a bar indicates a bend with the bar turned towards the observer.

Splices shown thus indicate a lap splice, not a bend in the bar.

Mechanical splice
Headed deformed bar

NOTES

1. This drawing shall be used in conjunction with 40-D-60004.
2. For Minimum Requirements For Detailing Reinforcement, see 40-D-60004.
3. Unless otherwise shown on the concrete outline and/or reinforcement specifications drawings, the notes shown are minimum requirements and typical for all drawings that refer to this drawing.
4. Unless otherwise shown on the reinforcement specifications drawings or 40-D-60004, follow the recommendations established by the ACI Detailing Manual - 2004 (SP-66).
5. # Denotes reinforcement bar number.
6. Numerals in parentheses ( ) following notes, details, and section letters or numbers indicate the number of the drawing upon which the section or detail is indicated or shown. For example (60524) denotes drawing XXX-D-60524. The letters XXX shown here will be numbers denoting the project.

RECLAMATION
Managing Water in the West

ALWAYS THINK SAFETY

U.S. DEPARTMENT OF THE INTERIOR
BUREAU OF RECLAMATION
STANDARD DRAWINGS

STANDARD AND TYPICAL DESIGNS

CONCRETE OUTLINE AND REINFORCEMENT

R. BARTHEL
DESIGNED
R. RODRIGUEZ
DRAWN
J. WAGNER
CHECKED
McGovern, Robert K P.E.
TECH. APPR.
Bernstein, Alfred I
APPROVED
PEER REVIEWER - Plant Structures Group

DENVER, CO 2016-09-23

GENERAL NOTES FOR CONCRETE OUTLINE AND REINFORCEMENT

40-D-60003

SHEET 1 OF 2

DATE AND TIME PLOTTED
SEPTEMBER 23, 2016 07:26
PLOTTED BY
RRODRIGUEZ

CAD SYSTEM
AutoCAD Rel. 20.0s
LAST REVISED
40-D-60003-D-1.DWG

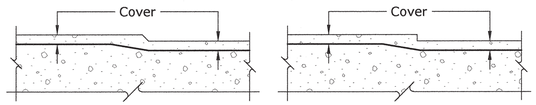

OFFSET LESS THAN 3"

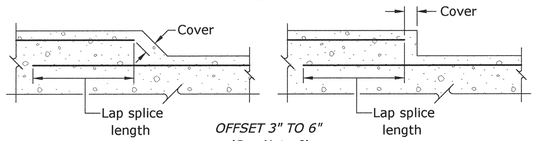

OFFSET 3" TO 6"
(See Note 6)

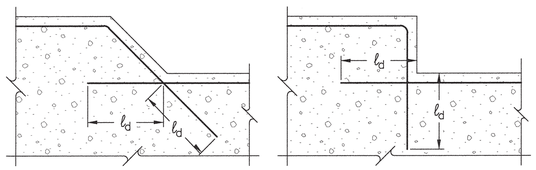

OFFSET GREATER THAN 6"
Nonrestricted Member Thickness

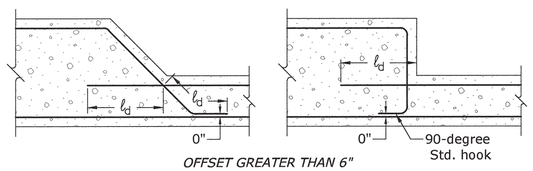

OFFSET GREATER THAN 6"
Restricted Member Thickness

TYPICAL OFFSET DETAILS

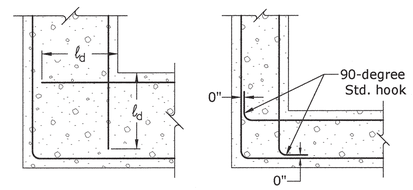

NONRESTRICTED MEMBER THICKNESS

RESTRICTED MEMBER THICKNESS

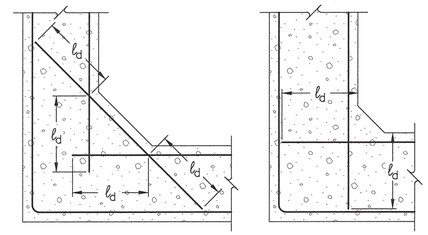

FILLET 1'-0" OR GREATER

FILLET LESS THAN 1'-0"

TYPICAL CORNER DETAILS

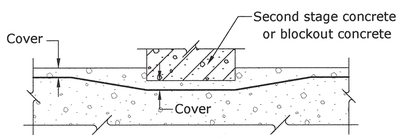

RECESS LESS THAN 3" DEEP

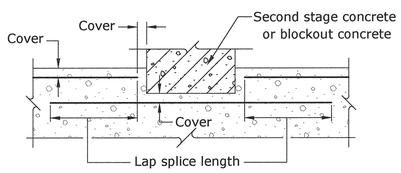

RECESS 3" TO 6" DEEP
(See Note 6)

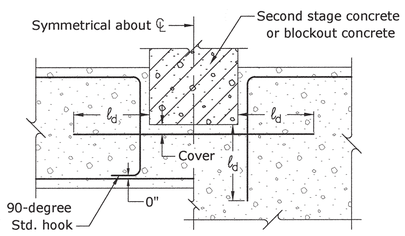

RECESS GREATER THAN 6"

TYPICAL BLOCKOUT RECESS DETAILS
(Second stage concrete shown)

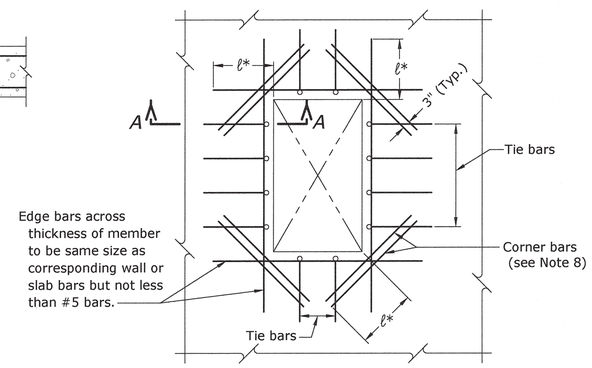

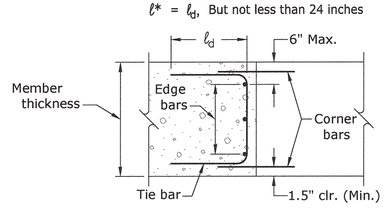

SECTION A-A

OPENINGS :
TABLE FOR ADDITIONAL REINFORCEMENT

MEMBER THICKNESS	TIE BARS	EDGE BARS	CORNER BARS
Less than 9"	None	1 - ctr.	2 - #4 ctr.
9" thru 1'-5"	None	2 - (1 ef)	4 - #4 (2 ef)
1'-6" thru 3'-0"	#4@1'-0"	3 - eq. spc.	4 - #4 (2 ef)
Over 3'-0"	#6@1'-0"	Spc. @ 1'-0"	4 - #4 (2 ef)

Omit edge and tie bars along sides of openings where opening dimension is less than 1'-6".
Omit corner bars at sides of openings adjacent to floors, walls, or beams.
Omit corner bars if both dimensions of opening are less than 1'-6".

RECESSES :
Use corner bars in face of recesses deeper than 4" if either dimension of recess is equal to or greater than 1'-6".

ADDITIONAL REINFORCEMENT AROUND OPENINGS AND RECESSES

f'c = 3,000 psi TABLE 3.0-60 fy = 60,000 psi

Bar size No. *** IP (SM)	MINIMUM ℄ to ℄ BAR SPACING (INCHES)	LAP SPLICE LENGTH (INCHES)		DEVELOPMENT LENGTH ℓ_d (INCHES)	
		TOP BARS *	OTHER BARS	TOP BARS *	OTHER BARS
3 (10)	3	17	13	13	12
4 (13)	3	23	18	18	14
5 (16)	3.5	28	22	22	17
6 (19)	4	34	26	26	20
7 (22)	4.5	49	38	38	29
8 (25)	5	56	43	43	33
9 (29)	6	63	49	49	38
10 (32)	6.5	71	55	55	42
11 (36)	7.5	79	61	61	47
10 (32)	6	75**	58**	58	45
11 (36)	6	93**	71**	71	55

f'c = 4,000 psi TABLE 4.0-60 fy = 60,000 psi

Bar size No. *** IP (SM)	MINIMUM ℄ to ℄ BAR SPACING (INCHES)	LAP SPLICE LENGTH (INCHES)		DEVELOPMENT LENGTH ℓ_d (INCHES)	
		TOP BARS *	OTHER BARS	TOP BARS *	OTHER BARS
3 (10)	3	15	12	12	12
4 (13)	3	20	15	15	12
5 (16)	3.5	25	19	19	15
6 (19)	4	29	23	23	18
7 (22)	4.5	43	33	33	25
8 (25)	5	49	37	37	29
9 (29)	6	55	42	42	33
10 (32)	6.5	62	47	47	37
11 (36)	7.5	68	53	53	41
10 (32)	6	65**	50**	50	39
11 (36)	6	80**	62**	62	48

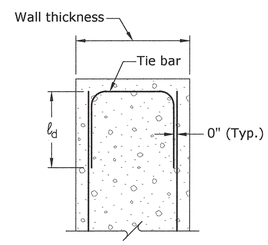

TYPICAL TOP OF WALL DETAIL

For wall thickness less than 1'-6", tie bars not required.
For wall thickness 1'-6" and larger, tie bars to be #6@1'-0" unless otherwise shown on reinforcement specifications drawings.

f'c = 3,500 psi TABLE 3.5-60 fy = 60,000 psi

Bar size No. *** IP (SM)	MINIMUM ℄ to ℄ BAR SPACING (INCHES)	LAP SPLICE LENGTH (INCHES)		DEVELOPMENT LENGTH ℓ_d (INCHES)	
		TOP BARS *	OTHER BARS	TOP BARS *	OTHER BARS
3 (10)	3	16	12	12	12
4 (13)	3	21	16	16	13
5 (16)	3.5	26	20	20	16
6 (19)	4	31	24	24	19
7 (22)	4.5	45	35	35	27
8 (25)	5	52	40	40	31
9 (29)	6	59	45	45	35
10 (32)	6.5	66	51	51	39
11 (36)	7.5	73	56	56	43
10 (32)	6	70**	54**	54	41
11 (36)	6	86**	66**	66	51

f'c = 4,500 psi TABLE 4.5-60 fy = 60,000 psi

Bar size No. *** IP (SM)	MINIMUM ℄ to ℄ BAR SPACING (INCHES)	LAP SPLICE LENGTH (INCHES)		DEVELOPMENT LENGTH ℓ_d (INCHES)	
		TOP BARS *	OTHER BARS	TOP BARS *	OTHER BARS
3 (10)	3	14	12	12	12
4 (13)	3	19	14	14	12
5 (16)	3.5	23	18	18	14
6 (19)	4	28	21	21	17
7 (22)	4.5	40	31	31	24
8 (25)	5	46	35	35	27
9 (29)	6	52	40	40	31
10 (32)	6.5	58	45	45	35
11 (36)	7.5	64	50	50	38
10 (32)	6	61**	47**	47	37
11 (36)	6	76**	58**	58	45

f'c = 5,000 psi TABLE 5.0-60 fy = 60,000 psi

Bar size No. *** IP (SM)	MINIMUM ℄ to ℄ BAR SPACING (INCHES)	LAP SPLICE LENGTH (INCHES)		DEVELOPMENT LENGTH ℓ_d (INCHES)	
		TOP BARS *	OTHER BARS	TOP BARS *	OTHER BARS
3 (10)	3	13	12	12	12
4 (13)	3	18	14	14	12
5 (16)	3.5	22	17	17	13
6 (19)	4	26	20	20	16
7 (22)	4.5	38	29	29	23
8 (25)	5	44	34	34	26
9 (29)	6	49	38	38	29
10 (32)	6.5	55	43	43	33
11 (36)	7.5	61	47	47	36
10 (32)	6	58**	45**	45	35
11 (36)	6	72**	55**	55	43

* Top bars are defined as horizontal reinforcement with a casting position of more than 12 inches of fresh concrete placed below the bar (see NOTES TO DESIGNERS AND DETAILERS, Note 5 on 40-D-60003).
** Splices must be staggered.
*** IP = Inch-pound bar size designation.
SM = Soft metric bar size designation.

NOTES

1. This drawing shall be used in conjunction with 40-D-60003.
2. For Concrete Outline General Notes and Reinforcement General Notes, see 40-D-60003.
3. For ABBREVIATIONS and CONCRETE SYMBOLS, see 40-D-60003.
4. For NOTES TO DESIGNERS AND DETAILERS, see 40-D-60003.
5. Unless otherwise shown on the reinforcement specifications drawings, the details shown are minimum requirements and typical for all reinforcement drawings that refer to this drawing.
6. This detail may not be appropriate for tension areas of shallow structural members. If in doubt, use detail for recess greater than 6".
7. TABLES 3.0-60 thru 5.0-60 generated using ACI 318 Eq. 25.4.2.3a and ACI 350 Eq. 12-1.
8. Development of diagonal corner bars in close proximity to another opening, wall or slab, will require bends or hooks.

RECLAMATION
Managing Water in the West

ALWAYS THINK SAFETY

U.S. DEPARTMENT OF THE INTERIOR
BUREAU OF RECLAMATION
STANDARD DRAWINGS

STANDARD AND TYPICAL DESIGNS

CONCRETE OUTLINE AND REINFORCEMENT

REV NO.	DATE	DESCRIPTION	BY
1	2016-12-08	MINOR REVISION	McGovern, Robert K P.E.

R. BARTHEL
DESIGNED
R. RODRIGUEZ
DRAWN
L. NGUYEN
CHECKED
McGovern, Robert K P.E.
TECH. APPR.
Bernstein, Alfred I
APPROVED
PEER REVIEWER - Plant Structures Group

DENVER, CO 2016-09-23

MINIMUM REQUIREMENTS FOR DETAILING REINFORCEMENT

40-D-60004

SHEET 2 OF 2

Released

DATE AND TIME PLOTTED
SEPTEMBER 23, 2016 07:27
PLOTTED BY
RRODRIGUEZ

CAD SYSTEM
AutoCAD Rel. 20.0s
CAD FILENAME
40-D-60004-RD-2.DWG

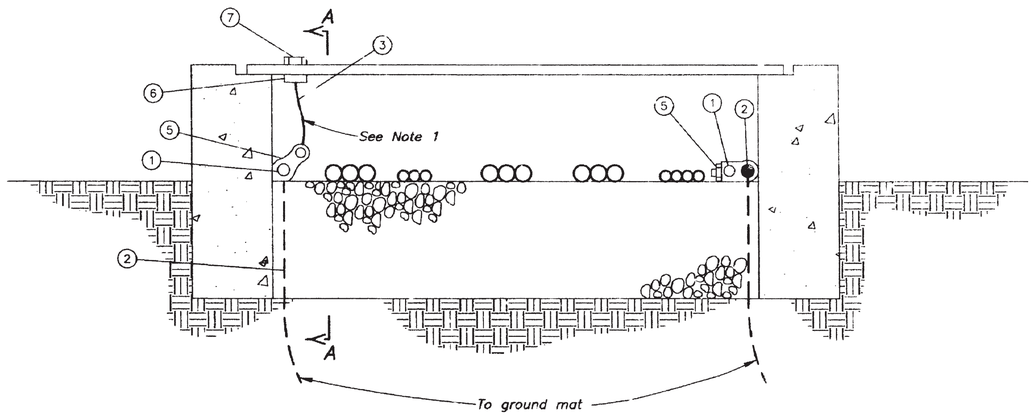

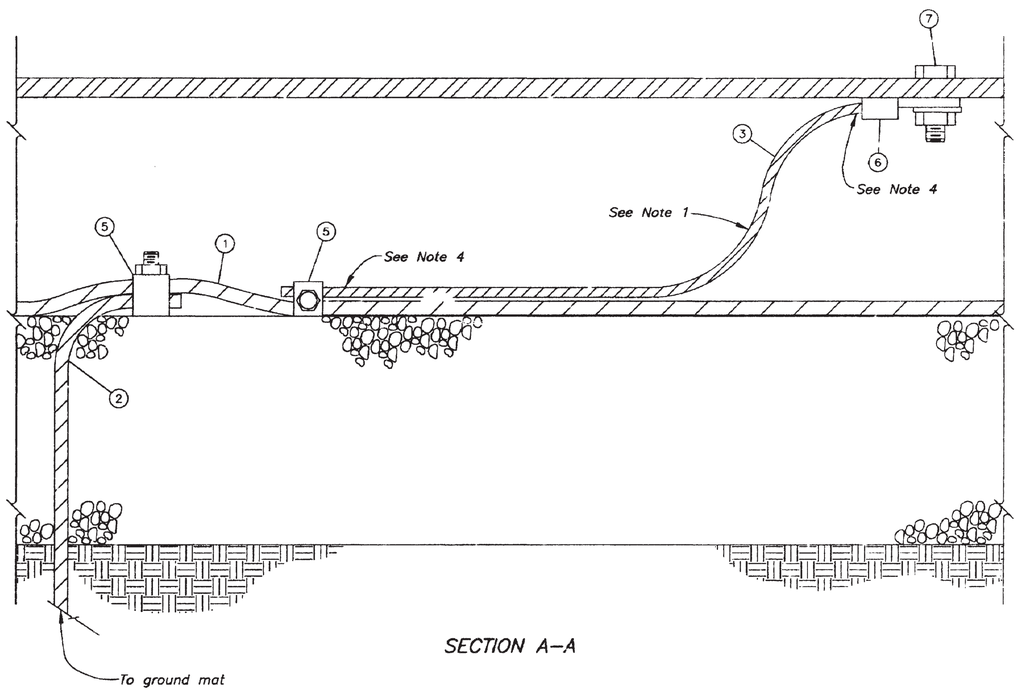

SECTION A–A

LIST OF MATERIALS

ITEM	DESCRIPTION
1	No. 2/0 AWG copper cable
2	No. 4/0 AWG copper cable
3	No. 6 AWG copper cable
4	
5	Connector (Burndy Cat. No. KVSW28)
6	Terminal (Anderson Type VL4S Tinned)
7	1/4" X 1" Aluminum bolt, nut and lockwasher

NOTES

1. The No. 6 AWG copper ground cables shall be installed with enough slack to allow the trench covers to be removed and lie flat without interfering with the steel or concrete foundations where possible.
2. When two or more cable trenches are located ajacent to each other, each trench shall be grounded in accordance with this drawing.
3. All materials shall be equivalent to those referenced.
4. If No. 6 AWG insulated copper cable is installed, the insulation shall be stripped back at least 12–inches from each end.

REFERENCE DRAWINGS

ELECTRICAL INSTALLATION – TYPICAL GROUNDING DETAILS (SHT 1 OF 2) 40–D–4334

TYPE C CABLE TRENCH OUTLINE 40–D–5350

REV. NO.			
3	2004–07–06 D – RAS	MINOR REVISIONS.	
3 – 24 – 00 D – L. G.	REDRAWN IN AUTOCAD R.14 FORMAT		
5 –1– 78 D – R. A. E.	CHANGED ITEMS 1, 3 – 6, NOTE 1; ADDED NOTE 4.		

THIS DRAWING SUPERSEDES IN PART DRAWING 40–D–4336, 01–14–2003

ALWAYS THINK SAFETY

UNITED STATES
DEPARTMENT OF THE INTERIOR
BUREAU OF RECLAMATION
STANDARD DESIGNS

ELECTRICAL INSTALLATION

TYPICAL CABLE TRENCH GROUNDING

DESIGNED S. G. P. SUBMITTED E. M. WILSON
DRAWN J. M. FIELDS RECOMMENDED J. V. BAPTIST
CHECKED G. C. APPROVED T. M. HOLLEARN
ACTING CHIEF DESIGN ENGINEER

DENVER, COLORADO JUNE 3, 1968 SHEET 1 OF 1

40–D–6182

CAD SYSTEM AutoCAD Rel. 15.0s
CAD FILENAME 40-D-6182.DWG
DATE AND TIME PLOTTED JUNE 30, 2004 15:29
PLOTTED BY DCSWIFCAR

SAMPLE NAMEPLATES

STRAINER DRAIN

EXTENDED TYPE

STRAINER
DRAIN

COMPACT TYPE

FIRE PROTECTION
WATER SUPPLY
CAUTION
2 1/2" OUTLET FOR FIRE
DEPARTMENT USE ONLY

INSCRIPTION AND CLOSE RANGE
INFORMATIONAL LETTERING

GOTHIC LETTERING CHART

1/4"
NORMAL (Avg. width .271")
ABCDEFGHIJKLMN
ABCDEFGHIJKLMNOP
CONDENSED (Avg. width .234")

3/16"
NORMAL (Avg. width .203")
ABCDEFGHIJKLMNOPQR
ABCDEFGHIJKLMNOPQRSTU
CONDENSED (Avg. width .175")

5/32"
NORMAL (Avg. width .163")
ABCDEFGHIJKLMNOPQRSTUV
ABCDEFGHIJKLMNOPQRSTUVWXYZ
CONDENSED (Avg. width .140")

1/8"
NORMAL (Avg. width .135")
ABCDEFGHIJKLMNOPQRSTUVWXYZ
ABCDEFGHIJKLMNOPQRSTUVWXYZ
CONDENSED (Avg. width .116")

3/32"
NORMAL (Avg. width .103")
ABCDEFGHIJKLMNOPQRSTUVWXYZ
ABCDEFGHIJKLMNOPQRSTUVWXYZ
CONDENSED (Avg. width .086")

*Average widths listed include spacing between letters.

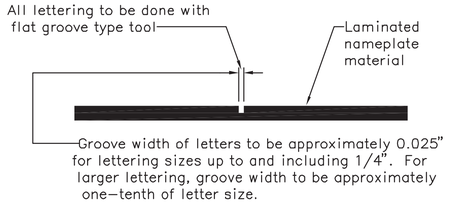

LETTERING DETAIL

SIZES AND LETTER SPACING OF NAMEPLATES

FOR DIMENSIONS SEE TABLES 1 & 2

TABLE 1
WIDTH
TABLE FOR ALL LETTERING THE SAME SIZE

GOTHIC LETTER SIZE	NO. OF LINES 1 W	1 B	2 W	2 S	2 B	3 W	3 S	3 B
1/4	1.00	.375	1.25	.15	.30	1.75	.15	.35
3/16	.75	.28	1.00	.11	.26	1.25	.11	.23
5/32	.50	.17	.75	.08	.18	1.00	.09	.18
1/8	.50	.19	.75	.08	.21	1.00	.08	.23
3/32	.50	.20	.50	.07	.12	.75	.08	.15

Dim. in inches

For other lettering sizes, more than three lines, or various size lettering on same nameplate, arrange width as follows:

Space(S)=Average of letter sizes on each side of space x 0.6.

Border(B)=Largest lettering size on name-plate x 1.2 + half of odd amounts to give total width(W) to even 1/4".

TABLE 3
STANDARD NAMEPLATES
FOR ELECTRICAL EQUIPMENT ONLY

NAMEPLATE SIZE NO.	NAMEPLATE DIMENSIONS L	W	B	LETTERING SIZE
1	1 1/8	7/16	1/16	3/32
2	1 1/2	9/16	1/8	3/32
3	1 3/4	5/8	1/8	1/8
4	2 1/4	3/4	1/8	3/16
5	3	1	7/32	3/16
6	4	1 1/4	1/4	1/4
7	6	1 3/4	1/4	1/2

Above nameplates shall be used for electrical equipment unless otherwise specified.

Dim. in inches

TABLE 2
LENGTH

NO. OF LETTERS AND SPACES	LETTERING SIZE ON LONGEST LINE (NORM=NORMAL; COND=CONDENSED) 1/4 NORM	1/4 COND	3/16 NORM	3/16 COND	5/32 NORM	5/32 COND	1/8 NORM	1/8 COND	3/32 NORM	3/32 COND
1										
2										
3	3	3	3	3	3	3	3	3	3	3
4										
5										
6										
7	3 1/2									
8		3 1/2								
9	4		3 1/2							
10		4								
11	4 1/2			3 1/2						
12	5	4 1/2	4		3 1/2					
13										
14	5 1/2	5	4 1/2	4		3 1/2	3 1/2			
15					4					
16	6									
17		5 1/2	5	4 1/2		4				
18	6 1/2				4 1/2		4	3 1/2		
19		6	5 1/2	5						
20	7						4		3 1/2	
21		6 1/2			5	4 1/2				
22	7 1/2		6	5 1/2			4 1/2	4		
23		7								
24	8		6 1/2	6	5 1/2	5	5	4 1/2	4	3 1/2
25	8 1/2	7 1/2								
26										

Dim. in inches

For other lettering sizes or longer nameplates, use the following formula:

L = A(N+n) + 2M (Nameplate length cut to nearest 1/2").

L – Length of nameplate.
A – Average letter width on longest line.
N – Number of letters on longest line.
n – Number of spaces on longest line
M – Margin=Average letter width plus 5/8".

MOUNTING OF NAMEPLATES

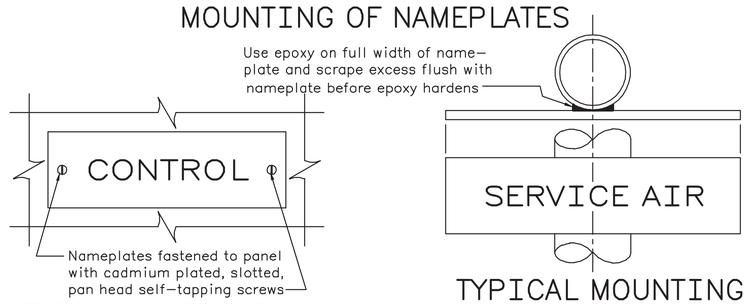

TYPICAL MOUNTING ON PANEL

TYPICAL MOUNTING ON VERTICAL PIPE

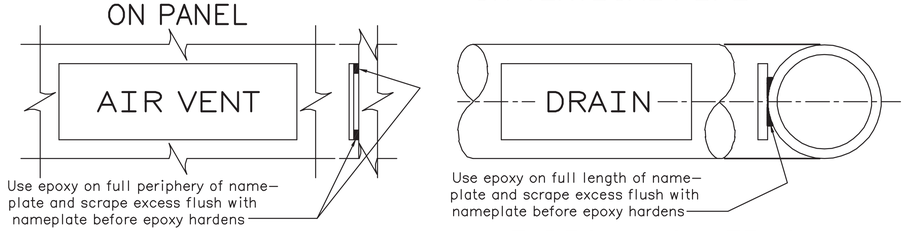

TYPICAL MOUNTING ON CONCRETE WALL

TYPICAL MOUNTING ON HORIZONTAL PIPE

DRILLING OF NAMEPLATES
(For panel mounting only)

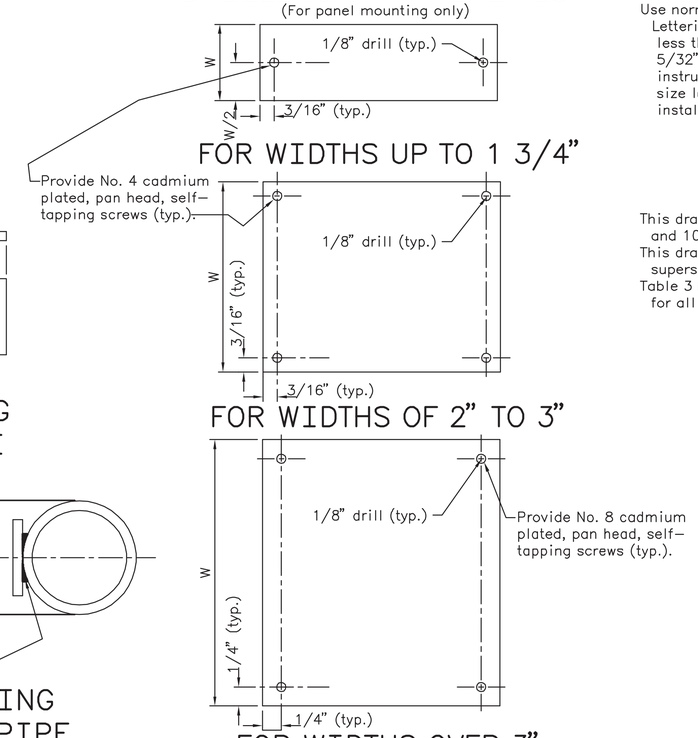

FOR WIDTHS UP TO 1 3/4"

FOR WIDTHS OF 2" TO 3"

FOR WIDTHS OVER 3"

NAMEPLATE MATERIAL

NOTE – All nameplate material shall be suitable for exposure to direct sunlight without detrimental fading.

TYPE A – Material shall be laminated phenolic resin sheets 1/16" or 3/32" thick (as specified) opaque black surface, white layer adjacent to surface layer, buffed or satin finish. Sheets to be cut to size with square edges. Engraving to cut through black surface to white layer. Shall conform to Military Specification MIL – P – 78A and Federal Specification L–P–509a.

TYPE B – Same as Type A except Chinese red surface or equivalent.

TYPE C – Same as Type A except 1/8", 3/16", or 1/4" thick (as specified).

TYPE D – Same as Type A except Chinese red surface or equivalent and 1/8", 3/16", or 1/4" thick (as specified).

NAMEPLATE USES

TYPE A – For panel mounting with self-tapping screws. For concrete wall or other flat mounting to identify valves, equipment, etc. Mount with epoxy cement–indoors or outdoors.

TYPE B – Red nameplates are restricted to uses such as fire protection equipment, warning inscriptions, and emergency devices. Methods of mounting shall be the same as for Type A.

TYPE C – For mounting on non–flat surface with epoxy cement.

TYPE D – Restricted to uses such as fire protection, equipment warning inscriptions, and emergency devices. For mounting on non–flat surfaces with epoxy cement.

LETTERING

Use normal or condensed letter types shown on the Gothic Lettering Chart. The normal size of lettering shall be not less than 3/16" high (1/4" preferred), except that 5/32" and smaller may be used for information and instructions that may be read at close range. Larger size lettering may be specified for out–of–doors installations or where necessary.

NOTES

This drawing supersedes Drawings No. 40–D–5173, 106–D–341, and 106–D–342.

This drawing and Drawings No. 40–D–6124, –6130, and –6187 supersede Drawing No. 40–D–2567.

Table 3 for ELECTRICAL EQUIPMENT ONLY, Tables 1 and 2 for all other equipment.

10 – 13 – 00 D – L.G.	Redrawn in AutoCAD
12 – 11 – 79 D – L.H.	Redrawn
11 – 6 – 70 D – D.A.W.	Add Table 3 and Note

ALWAYS THINK SAFETY

UNITED STATES
DEPARTMENT OF THE INTERIOR
BUREAU OF RECLAMATION

STANDARD DESIGNS

STANDARD NAMEPLATES

DESIGNED D.A.W. TECHNICAL APPROVAL C.G.Bates
DRAWN J.M.F. SUBMITTED Jack W. Hilf
CHECKED D.M.B.–S.X.K.–E.M.J. APPROVED B.P.Bellport CHIEF ENGINEER

CADD SYSTEM	CADD FILENAME	DATE AND TIME PLOTTED
AutoCAD Release 12_c2–a	40D6324.DWG	NOVEMBER 29, 1994 12:28
DENVER, COLORADO	MAY 1970	40–D–6234

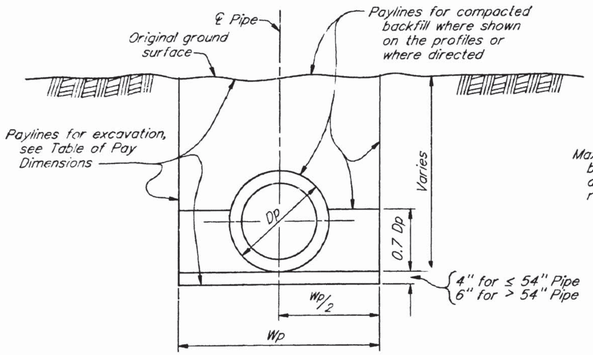

TRENCH FOR PAYLINES ONLY
ALL TYPES OF PIPE

TABLE OF PAY DIMENSIONS

Pipe I.D. (Inches)	Dp (inches)	Wp (Feet)
12 thru 18	I.D. + 4	$\frac{1}{12}$(I.D. + 24)
Over 18 thru 24	I.D. + 4	$\frac{1}{12}$(I.D. + 40)
Over 24	1.167 I.D.	$\frac{1}{12}$(1.167 I.D. + 36)

GRADATION LIMITS FOR SELECT MATERIAL

SIZE *	PERCENT BY WEIGHT
Passing No. 200 sieve	12 or less **
Passing No. 50 sieve	25 or less

* Maximum particle size depends on pipe type and coating supplied, see Specifications paragraphs.

** When saturation and internal vibration method is used for compaction, percent by weight shall be 5 or less.

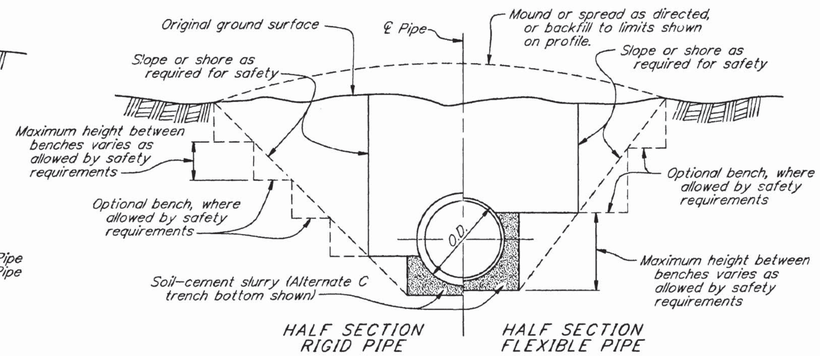

TYPICAL TRENCH DETAILS

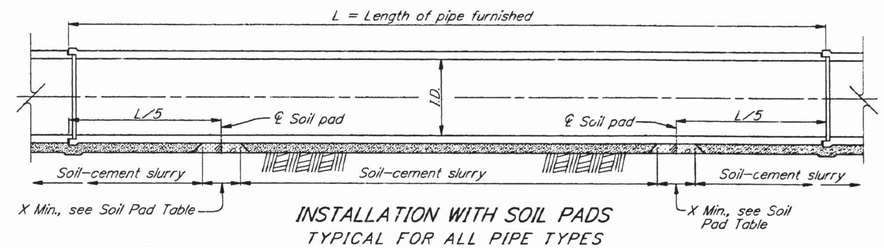

INSTALLATION WITH SOIL PADS
TYPICAL FOR ALL PIPE TYPES

SOIL PAD TABLE

PIPE I.D.	X
12" – 27"	.05L
30" – 66"	.10L
69" – 114"	.15L

NOTE: Soil pads allow observation of the soil-cement slurry flowing from one side of the pipe to the other.

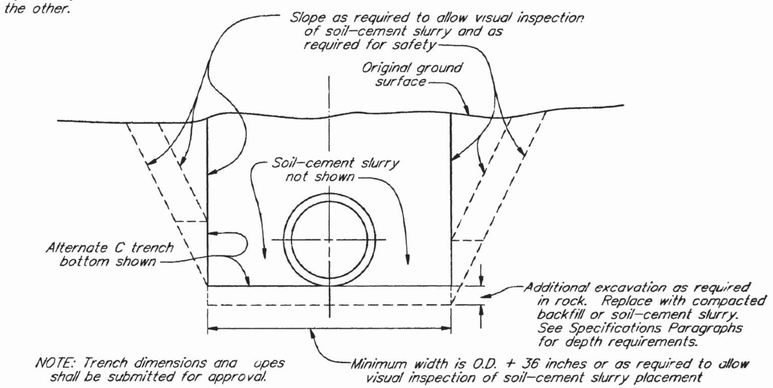

OPTIONAL INSTALLATION ON TRENCH BOTTOM
REQUIRED FOR PIPE > 114"

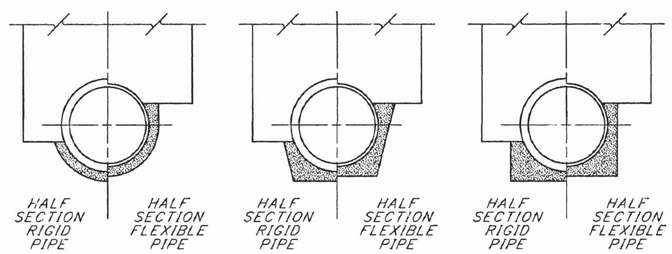

ACCEPTABLE TRENCH BOTTOMS FOR SOIL-CEMENT SLURRY

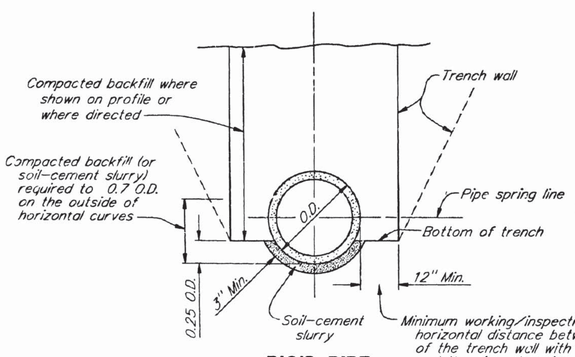

RIGID PIPE

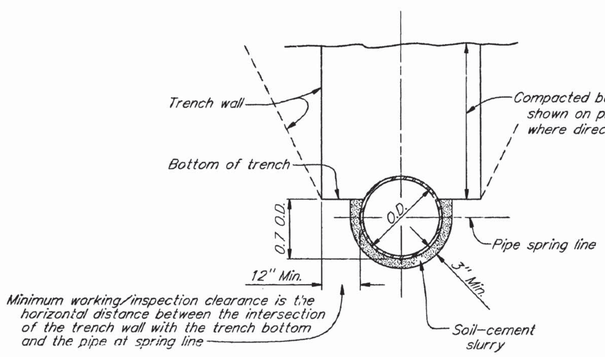

TRENCH TYPE 1

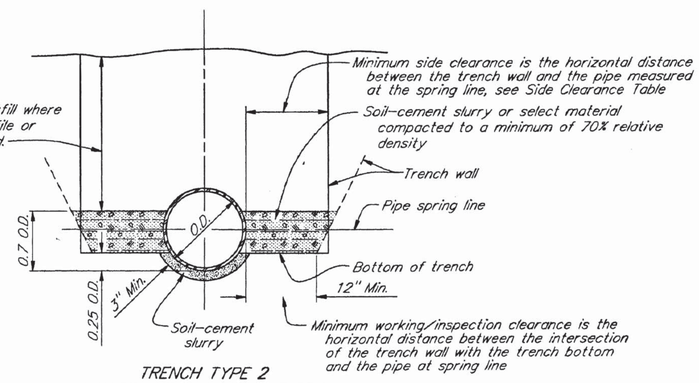

TRENCH TYPE 2
MAY BE USED FOR TRENCH TYPE 1

FLEXIBLE PIPE

PVC	12" – 36"
PRETENSIONED CONCRETE CYLINDER	12" – 66"
STEEL	12" AND LARGER
DUCTILE IRON	24" AND LARGER
FIBERGLASS	12" AND LARGER

SIDE CLEARANCE TABLE

TRENCH TYPE	MINIMUM SIDE CLEARANCE (INCHES)
1	12
2	ONE O.D.

For location of Trench Types, see Specifications.

NOTES

Dp and Wp are used for calculating pay quantities for all pipe and trench types. Calculations are based on vertical walls.

Paylines for backfill will be the paylines for excavation, except the volume of the pipe, based on the diameter Dp will be deducted, and except where the depth of backfill is limited as shown on profiles.

Pipe diameters shown are the nominal inside diameter (I.D.) of the pipe in inches unless otherwise indicated.

O.D. is the outside diameter, in inches, of the pipe actually installed.

Sloping, shoring, and benching shall be in accordance with Reclamation Construction Safety Standards.

Other installation methods with comparable pipe designs may be submitted for approval.

4-13-9. D-RPF	CHANGED BOTTOM WIDTH NOTE IN "OPTIONAL INSTALLATION ON TRENCH BOTTOM".

ALWAYS THINK SAFETY

UNITED STATES
DEPARTMENT OF THE INTERIOR
BUREAU OF RECLAMATION
STANDARD DESIGNS

PRESSURE PIPE
TRENCH INSTALLATION
SOIL-CEMENT SLURRY
12-INCH AND LARGER PIPE

DESIGNED RICHARD P. FUERST TECHNICAL APPROVAL LEO A. KINNEY JR.
DRAWN Bob Scully SUBMITTED DOUGLAS H. WEGENER
CHECKED LEO A. KINNEY JR. APPROVED W. L. LONG
CHIEF, WATER CONVEYANCE BRANCH

Calma Dimension III Release 7.0 | TYP_40_D_6552.MS:102 Drawing: D6552 | PLOT DATE 4/13/92
DENVER, COLORADO APRIL 1, 1991 | 40-D-6552

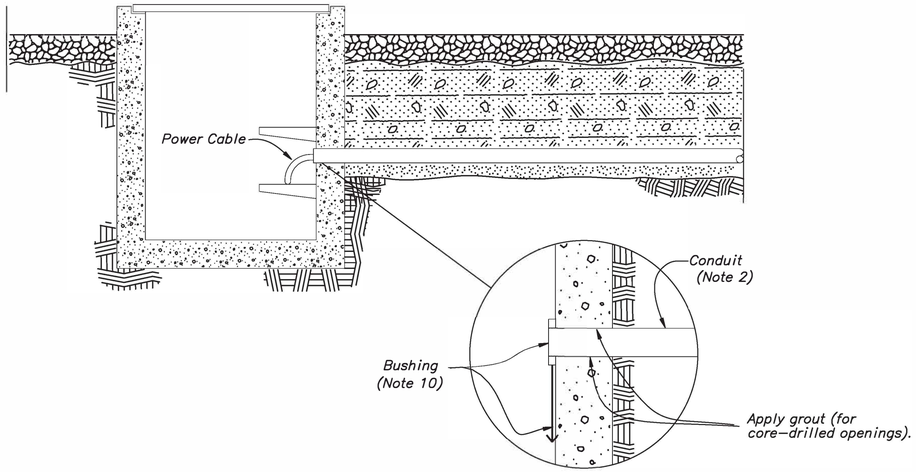

DETAIL A

(TERMINATION AT TYPE "A" & "B" CABLE TRENCHES)

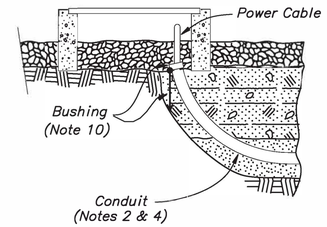

DETAIL B

(TERMINATION AT TYPE "C" CABLE TRENCH)

NOTES

1. This drawing applies to buried conduit runs in new installations.
2. Plastic-coated, rigid-steel (PCRS) or HDPE conduit, or if installing one single-conductor cable per conduit, use Schedule 80 PVC or HDPE conduit. Note, 1-phase circuit may be installed in PCRS conduit provided that the phase conductor and its neutral are run together in the conduit.
3. After cables are installed, fill entrance with a sealing material.
4. Minimum bending radius shall be 12 x the diameter of the conduit except if fiber cable is installed in conduit, min. bending radius shall be 15 x the conduit diameter.
5. Metal conduit riser. Ground in accordance with standard drawing 40-D-4334.
6. Conduit clamping in accordance with dwg. 40-D-7094.
7. Crouse-Hinds Type HUB, or equal.
8. Conduits to be buried at depth indicated wherever possible, thus keeping conduits above the ground mat cables. For conduits greater than 1.5" IPS, conduit burial depth can be greater to account for bends. However, do not place warning tape greater than 18" above conduit.
9. Where using HDPE conduit, provide coupling to transition to steel equipment/cabinet conduit risers; Or, transition from PCRS to GRS risers, if specified or desired.
10. For metal conduit, use grounding-type bushing. Use No. 4 AWG stranded copper cable to trench ground or ground mat.

REFERENCE DRAWINGS

TYPICAL GROUNDING DETAILS	40-D-4334
CABLE TRENCH - TYPES "A" & "B" - OUTLINE AND REINFORCEMENT	40-D-4632
CABLE TRENCH - TYPE "C" - OUTLINE AND REINFORCEMENT	40-D-5350
CONDUIT CLAMP AND SUPPORTS - TYPICAL DETAILS	40-D-7094

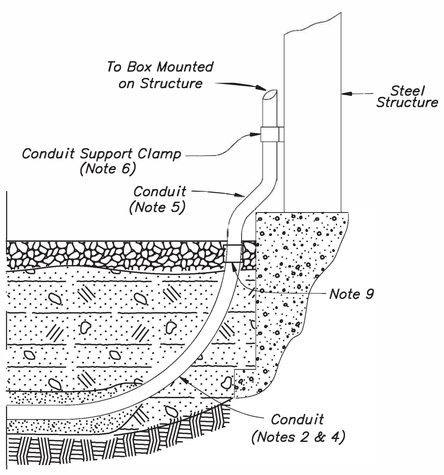

DETAIL C

(TERMINATION AT STRUCTURE)

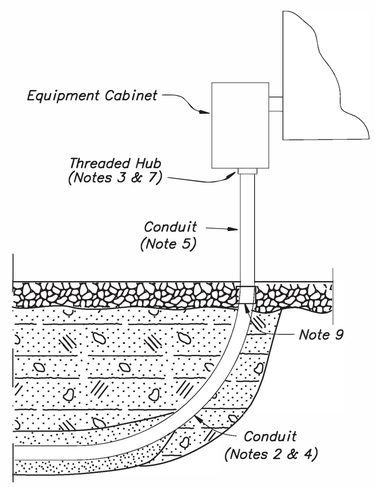

DETAIL D

(TERMINATION AT ELECTRICAL EQUIPMENT CABINET)

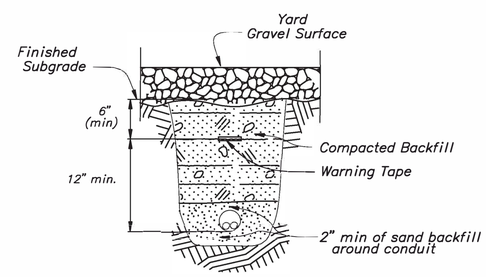

DETAIL E

(CONDUIT TRENCH)

(Note 8)

REV NO		
2	2008-03-11 D - T. L. W.	ADDED HPDE CONDUIT (REVISED NOTES 2, 5 AND ADDED NOTES 9, 10); ADDED NOTE 8; OTHER MINOR CHANGES. (-68430: D.R.C.)
1	2005-10-28 D - L. G., P.E.	REVISED TITLE BLOCK AND NOTES 4 & 5, ADDED NOTES 6 & 7, OTHER MINOR REVISIONS. (D.R.C.: D-8440)

ALWAYS THINK SAFETY

UNITED STATES
DEPARTMENT OF THE INTERIOR
BUREAU OF RECLAMATION

STANDARD DESIGNS

SWITCHYARDS AND SUBSTATIONS

ELECTRICAL INSTALLATION

BUIRED CONDUIT FOR LOW VOLTAGE CABLES

DESIGNED D. R. C. TECH. APPROVAL L. GAMUCIELLO
DRAWN D. R. C. SUBMITTED L. GAMUCIELLO
CHECKED E. R. LANGLEY APPROVED V. B. NOKES, JR. CHIEF, ELECTRICAL BRANCH

DENVER, COLORADO OCTOBER 23, 1991
SHEET 1 OF 1

40-D-6576

CAD SYSTEM AutoCAD Rel. 16.2s
CAD FILENAME 40-D-6576 REV.DWG
LAST REVISED MARCH 19, 2008 14:26
PLOTTED BY DCRAWFORD

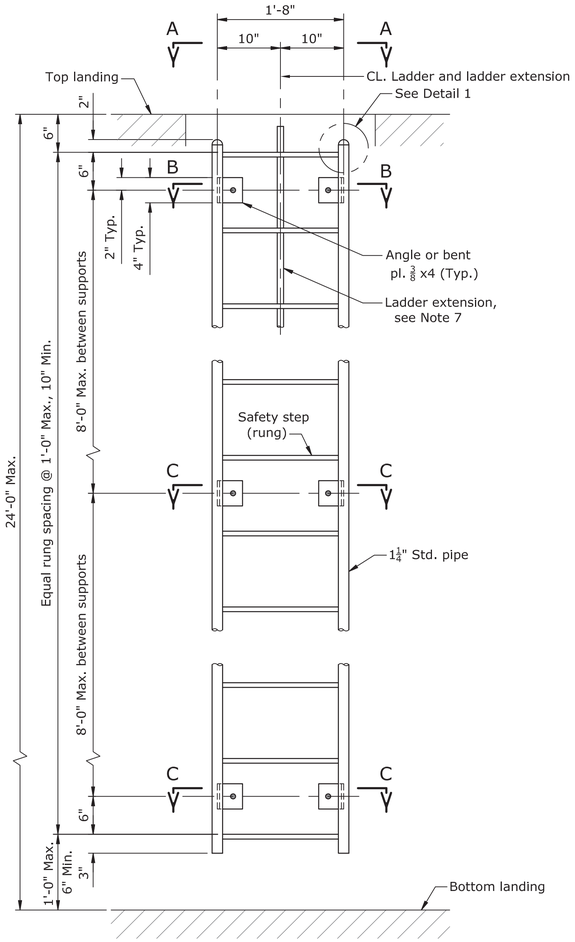

LADDER - TYPE 2

(For distances not exceeding 24'-0" between landings)

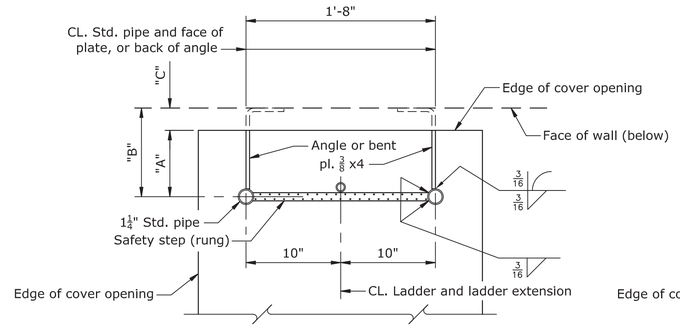

SECTION A-A

Rectangular opening at top landing

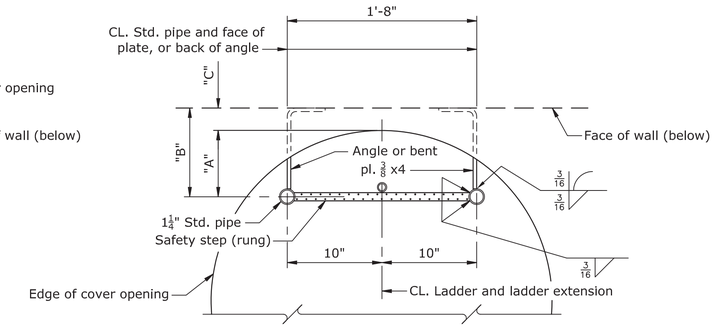

SECTION A-A

Round opening at top landing
(Min. 3'-0" diameter opening)

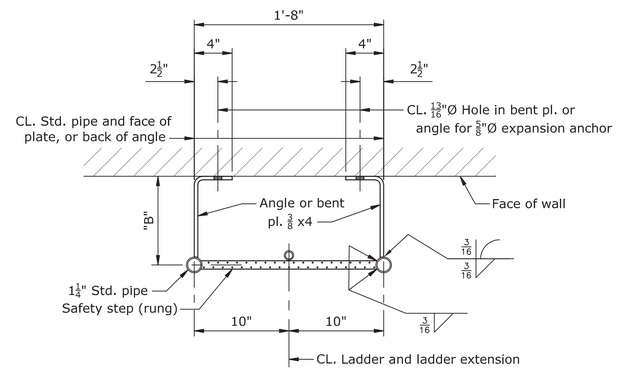

SECTION B-B

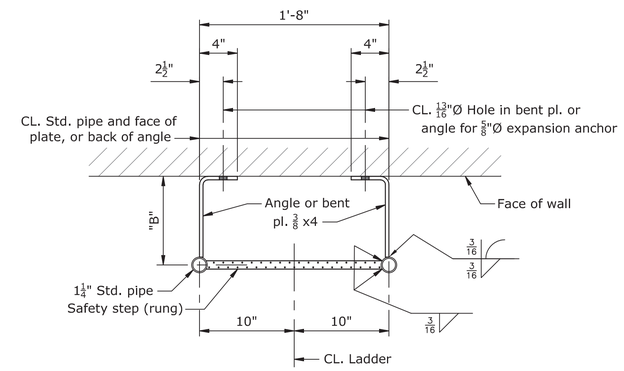

SECTION C-C

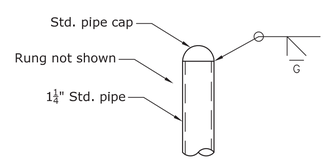

DETAIL 1

LADDER DIMENSIONS

"A" Equals 7 inches unless noted otherwise on structure drawing.
"B" Equal to "A" + "C".
"C" Varies depending upon opening offset from face of wall.

NOTES

1. All material is steel unless otherwise noted.
2. Details, welds, and other connections shown are typical for all similar conditions.
3. Dimensions shown are typical for similar details.
4. Galvanize all ferrous metalwork after fabrication. Provide vent holes as required.
5. Contractor determines length of ladders and rung spacings based on elevation difference. See structure drawings.
6. Grind all welds smooth.
7. Contractor shall verify if ladder extension is suitable to use for distances of less than 6 feet between landings. For these conditions, a grab bar shall be installed in lieu of a ladder extension. For grab bar details, see 40-D-6008 or 40-D-6009.

RECLAMATION
Managing Water in the West

ALWAYS THINK SAFETY

U.S. DEPARTMENT OF THE INTERIOR
BUREAU OF RECLAMATION
STANDARD DRAWINGS

STANDARD AND TYPICAL DESIGNS

MISCELLANEOUS METALWORK

REV NO		
2	D	RENAMED SECTIONS A-A TO B-B AND B-B TO C-C. ADDED SECTIONS A-A. REVISED SECTION INDICATORS ON LADDER DETAIL IN ELEVATION AND ADDED LADDER DIMENSION NOTES. REVISED LADDER DIMENSION AND ADDED NOTE. REVISED TITLE BLOCK.
2020-01-24		
Huerta, Olaff G P.E.		
1	D	UPDATED DRAWING TEXT STYLE, BORDER AND TITLE BLOCK TO CURRENT DRAWING RECORDS SYSTEM. NUMEROUS NOTES ADDED. REVISED SUBMITTED SIGNATURE. REVISED LADDER WIDTH. REVISED WELD SYMBOL IN SECTIONS.
2019-11-08		
Huerta, Olaff G P.E.		

A.M. TUCKER
DESIGNED
A.M. TUCKER
DRAWN
T.E. SADUSKY/DCD
CHECKED
T.C. GRABER
TECH. APPR.
JOHN D. SMART
APPROVED
PEER REVIEWER • CHIEF, CIVIL ENGINEERING DIVISION

DENVER, CO 1993-01-07

LADDERS
LADDER - TYPE 2

ELEVATION, SECTIONS, AND DETAIL

40-D-6601

1 OF 1

LAST SAVED DATE
2020-01-24
LAST SAVED BY
RRODRIGUEZ

CAD SYSTEM
AutoCAD 2020
CAD FILENAME
40-D-6601-RD-1.DWG

GENERAL NOTES

UNLESS OTHERWISE SHOWN, THESE NOTES ARE TYPICAL FOR ALL DRAWINGS THAT REFER TO THIS DRAWING.

ABBREVIATIONS

El. = Elevation
HP = High point
LP = Low point
WP = Working point
bf = bottom face
ef = each face
ff = far face
nf = near face
tf = top face
SP = Sewer pipe
TW = Tailwater
WS = Water surface, waterstop
CJ = Construction joint
EJ = Expansion joint
OCJ = Optional construction joint
VCJ = Vertical construction joint
Cr.J = Contraction joint
Ct.J = Control joint

WSA = Waterstop--Type A
WSB = Waterstop--Type B
WSD = Waterstop--Type D
WSE = Waterstop--Type E
WSF = Waterstop--Type F
WSG = Waterstop--Type G
WSH = Waterstop--Type H
MSN1 = Metal seal--Type N1
MSN2 = Metal seal--Type N2
MSZ = Metal seal--Type Z

CHAMFER

Chamfer edges of permanently exposed concrete surfaces with a 45° bevel, $\frac{3}{4}$" x $\frac{3}{4}$".

CONCRETE PLACEMENT

Before placing concrete, see all drawings released to the contractor as suitable for construction, including manufacturer's drawings, for all embedded material which is required in the placement.

CONCRETE SYMBOLS

The different concrete placements are indicated by the following symbols:

Concrete -- First stage

Concrete -- Second stage

Concrete -- Blockout

Existing concrete or concrete in adjacent structures

Grout

DIMENSIONS

All dimensions to a joint are to the centerline of the joint unless otherwise shown.
Dimensions to beams, columns, and walls are from reference lines or other control points.
Dimensions in parentheses ( ) on plans are beam depths.
Beam and slab depths shall be measured from the top of the structural slab. Dimensions given for the depth of recesses are from the surface of the structural concrete.
Thicknesses shown for walls and slabs placed against soil or rock are minimum dimensions.

EMBEDDED MATERIALS

Before placing concrete, care shall be taken that all embedded items are in position and securely fastened in place. Anchor bolt locations and settings are shown on the structural steel, miscellaneous metal, concrete, and equipment drawings. Conduits and grounding cables are shown on the manufacturer's drawings and the electrical drawings. All projecting waterstops and metal seats shall be supported and protected from damage and exposure.

FINISHES

For location and classes of finishes for formed and unformed concrete surfaces, see the specifications drawings and/or paragraphs.

JOINTS

All construction joints, identified as CJ, shall be provided where shown on the drawings. All optional construction joints, identified as OCJ, are to reduce the volume of placements or to facilitate construction. If optional joints are provided they shall be only at the locations shown. Additional construction joints may be used subject to approval.

REFERENCES

Numerals in parentheses that follow notes, details and section letters or numbers indicate the number of the drawing upon which the section or detail is indicated or shown. For example, (524) denotes Drawing No. XXX-D-524. The letters XXX shown here will be numbers denoting the project.

THIS DRAWING SUPERSEDES DRAWING 40-D-7006

REV NO		
1	2004- 12 -28 D - R.S.D.	REDRAWN IN AUTOCAD.

ALWAYS THINK SAFETY

UNITED STATES
DEPARTMENT OF THE INTERIOR
BUREAU OF RECLAMATION

STANDARD DESIGN

GENERAL CONCRETE OUTLINE NOTES

DESIGNED DL BORING TECH. APPR.
DRAWN DL BORING
CHECKED GARY SNYDER APPROVED
STRUCTURAL AND ARCHITECTURAL GROUP

CADD SYSTEM	CADD FILENAME	DATE AND TIME PLOTTED
AutoCAD Rel. 16.0s	40-D-7012.DWG	JANUARY 6, 2005 13:47
DENVER, COLORADO	MARCH 23, 1998	40-D-7012

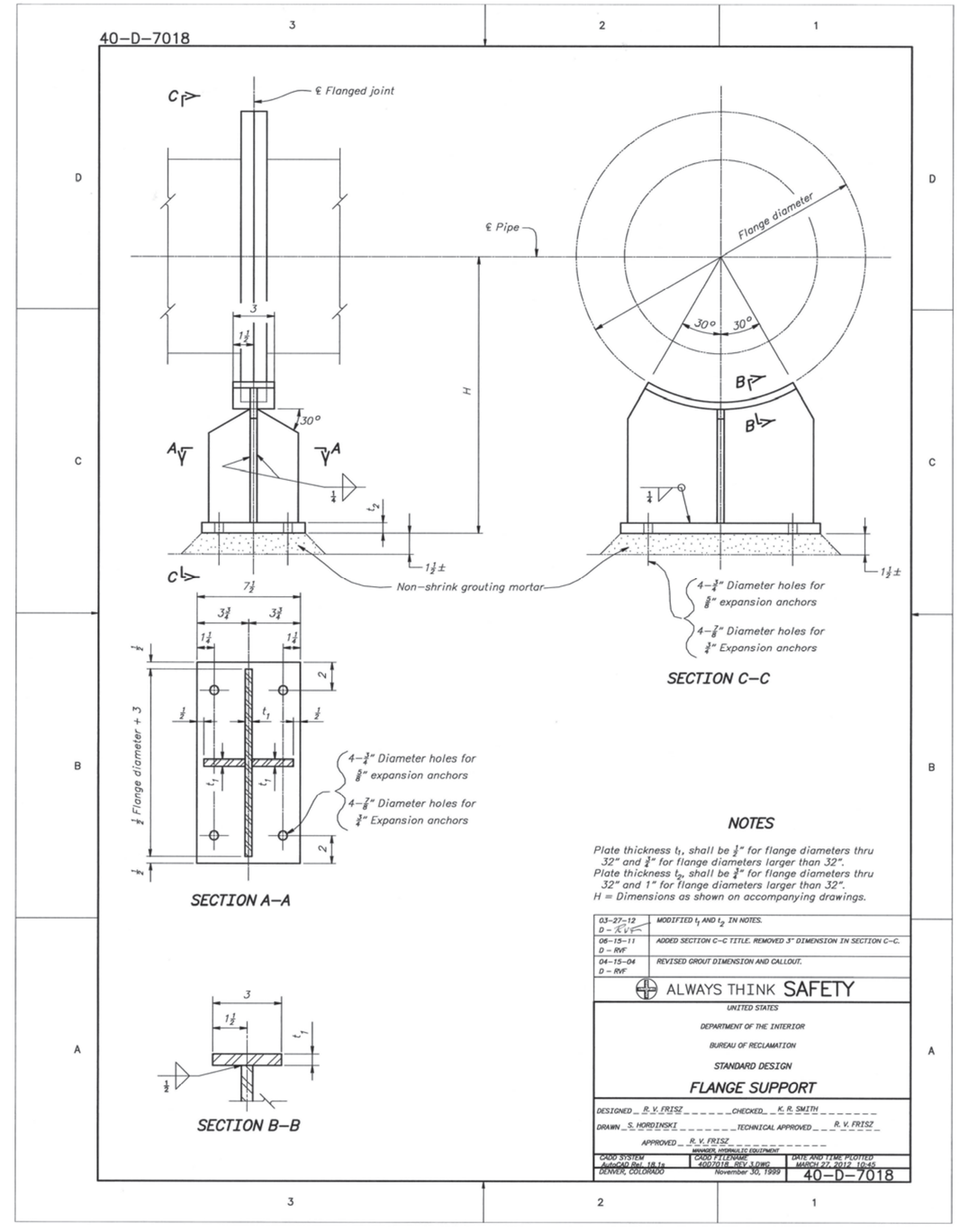
40-D-7018
℄ Flanged joint
℄ Pipe
Flange diameter
30°
30°
H
Non-shrink grouting mortar
4-3/4" Diameter holes for 5/8" expansion anchors
4-7/8" Diameter holes for 3/4" Expansion anchors
SECTION C-C
Flange diameter + 3
4-3/4" Diameter holes for 5/8" expansion anchors
4-7/8" Diameter holes for 3/4" Expansion anchors
SECTION A-A
SECTION B-B
NOTES
Plate thickness t1, shall be 1/2" for flange diameters thru 32" and 3/4" for flange diameters larger than 32".
Plate thickness t2, shall be 3/4" for flange diameters thru 32" and 1" for flange diameters larger than 32".
H = Dimensions as shown on accompanying drawings.
03-27-12 D - K.V.F. MODIFIED t1 AND t2 IN NOTES.
06-15-11 D - RVF ADDED SECTION C-C TITLE. REMOVED 3" DIMENSION IN SECTION C-C.
04-15-04 D - RVF REVISED GROUT DIMENSION AND CALLOUT.
ALWAYS THINK SAFETY
UNITED STATES
DEPARTMENT OF THE INTERIOR
BUREAU OF RECLAMATION
STANDARD DESIGN
FLANGE SUPPORT
DESIGNED R. V. FRISZ CHECKED K. R. SMITH
DRAWN S. HORDINSKI TECHNICAL APPROVED R. V. FRISZ
APPROVED R. V. FRISZ
MANAGER, HYDRAULIC EQUIPMENT
CADD SYSTEM AutoCAD Rel. 18.1s
CADD FILENAME 40D7018_REV 3.DWG
DATE AND TIME PLOTTED MARCH 27, 2012 10:45
DENVER, COLORADO November 30, 1999
40-D-7018

FIGURE 1

DIMENSIONS (INCHES) MALLEABLE IRON ONE-HOLE CLAMP

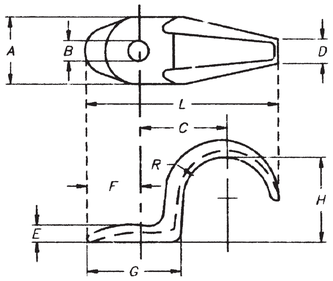

FOR RIGID CONDUIT										
SIZE	A	B	C	D	E	F	G	H	L	R
1/2	21/32	19/64	1 1/16	5/16	7/32	19/32	1 3/16	51/64	2 7/32	27/64
3/4	7/8	5/16	1 5/32	3/8	1/4	3/4	1 3/8	1 11/64	2 19/32	17/32
1	1 1/16	5/16	1 11/32	7/16	5/16	29/32	1 17/32	1 9/32	3 1/8	43/64
1 1/4	1 5/16	13/32	1 11/16	1/2	5/16	1 3/32	1 7/8	1 5/8	3 13/16	27/32
1 1/2	1 5/16	13/32	2	1/2	11/32	1 3/32	2	1 27/32	4 5/16	63/64
2	1 7/16	21/64	2 9/16	5/8	7/16	1 3/16	2 3/8	2 9/32	5 1/4	1 15/64
2 1/2	1 3/4	9/16	3	3/4	9/16	1 1/4	2 13/16	2 13/16	6	1 45/32
3	1 3/4	9/16	3 5/16	7/8	21/32	1 3/8	2 29/32	3 7/16	6 13/16	1 49/32
3 1/2	2	11/16	3 5/8	1	3/4	1 3/4	3 3/16	3 7/8	7 3/4	2 1/32
4	2 1/4	11/16	4 1/2	1 1/4	3/4	2	4 3/32	4 3/8	9 3/16	2 9/32

FOR ELECTRICAL METALLIC TUBING										
SIZE	A	B	C	D	E	F	G	H	L	R
1/2	21/32	1/4	53/64	3/8	5/32	35/64	1	21/32	1 13/16	23/64
3/4	21/32	1/4	1 1/32	3/8	7/32	1/2	1 1/16	29/32	2 1/8	15/32
1	25/32	9/16	1 1/8	3/8	1/4	3/4	1 9/32	1 5/32	2 19/32	19/32
1 1/4	25/32	9/16	1 23/64	3/8	1/4	3/4	1 9/32	1 1/4	3	29/64
1 1/2	7/8	5/16	1 17/32	3/8	1/4	3/4	1 5/16	1 27/64	3 5/16	37/64
2	1	27/64	1 27/32	3/8	5/16	3/4	1 7/16	2 5/32	3 7/8	1 7/64

SUPERSEDES 104-D-262

FIGURE 2

SUPPORTING CONDUIT TO STEEL H BEAM (EXPOSED)

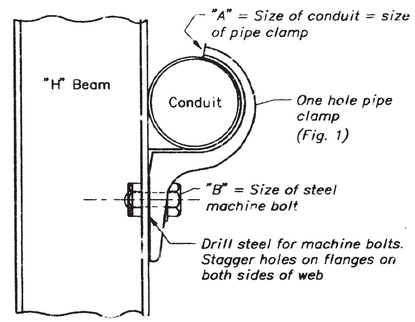

A	B
1/2"	No.12 x 1"
3/4"	1/4" x 1"
1"	1/4" x 1"
1 1/4"	3/16 x 1"
1 1/2"	3/8 x 1"
2"	1/2 x 1 1/2"
2 1/2"	1/2 x 1 1/2"
3"	1/2 x 1 1/2"
3 1/2"	5/8 x 1 1/2"
4"	5/8 x 1 1/2"

SUPERSEDES 104-D-270

FIGURE 3

SUPPORTING CONDUIT ON CONCRETE SURFACE WITH STANDARD ONE-HOLE M.I. PIPE CLAMP

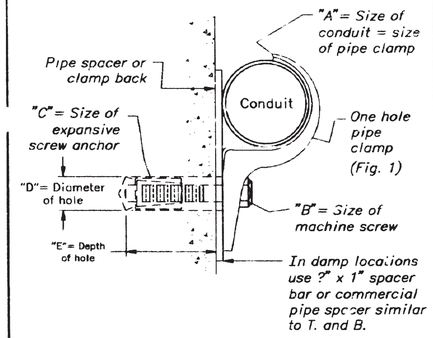

A	B	C *	D	E	NOTE:
1/2"	#12x3/4"	#12x24	1/2"	7/8"	All conduits not otherwise supported shall be held in place by clamps shown above, located at approx. 10 foot intervals.
3/4"	1/4"x1 3/4"	1/4"x20	1/2"	1 1/2"	
1"	1/4"x1 3/4"	1/4"x20	1/2"	1 1/2"	
1 1/4"	5/16"x2"	5/16"x18	5/8"	1 3/4"	
1 1/2"	3/8"x2 1/4"	3/8"x16	3/4"	2"	
2"-2 1/2"-3"	1/2"x2 1/4"	1/2"x13	7/8"	2 1/4"	
3 1/2"-4"	5/8"x3"	5/8"x11	1 1/8"	2 3/4"	

* The expansion screw anchor shall be of corrosion resistant material

SUPERSEDES 104-D-283

FIGURE 4

HIGH VOLTAGE CABLE CONDUIT RISER SUPPORT DETAILS

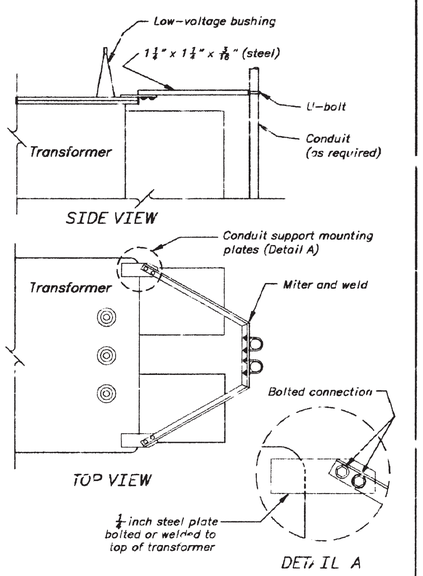

SUPERSEDES 104-D-806

FIGURE 5

MOUNTING CONDUIT TO TUBULAR STEEL STRUCTURE

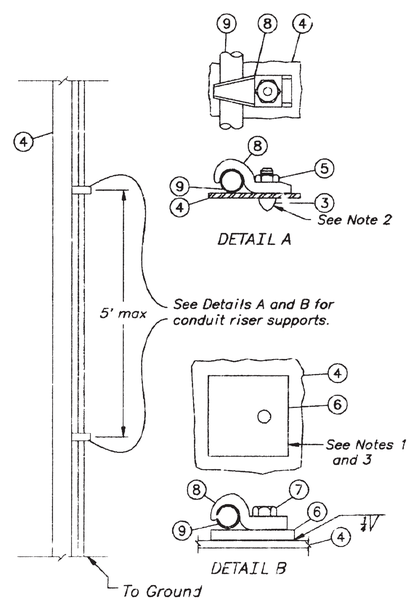

ITEM	DESCRIPTION
1	
2	
3	Power driver threaded stud (3/8" Dia.)
4	Tubular steel structure
5	Self-Locking hex nut (For item 3)
6	Steel plate (1 inch thick)
7	3/8" Dia. U.S. standard bolt (Length as Required)
8	Malleable iron pipe strap (Steel City Type HS)
9	Rigid metallic conduit

NOTES

1. For Detail B the 1" steel plate shall have an area larger than the projected area of the connecting clamp.
2. The 3/8" stud shall be driven into the tubular steel structure with a powder actuated fastening tool equal to Rainset Fastening System, as manufactured by Illinois Tool Works, Wood Dale, IL.
3. The 1" thick steel plate shall be welded to the tubular steel structure and have a 3/4" deep hole drilled and tapped for a 3/8" U.S. standard bolt.

SUPERSEDES 40-D-6309 IN PART

THIS DRAWING SUPERSEDES DRAWINGS AS NOTED IN FIGURES, 2004-09-30.

ALWAYS THINK SAFETY

UNITED STATES
DEPARTMENT OF THE INTERIOR
BUREAU OF RECLAMATION

STANDARD DESIGNS

ELECTRICAL INSTALLATION

CONDUIT CLAMP AND CONDUIT SUPPORTS TYPICAL DETAILS

DESIGNED _____ CHECKED _____
DRAWN _____ TECH. APPR. _____
APPROVED _____ P.E.
MANAGER, ELECTRICAL SYSTEMS GROUP

DENVER, COLORADO 2004-09-30
SHEET 1 OF 1

40-D-7094

CAD SYSTEM AutoCAD ver. 16.0a
DRAWING NAME 40-D-7094.DWG
DATE AND TIME PLOTTED OCTOBER 4, 2004 11:39
PLOTTED BY TCPARKER

Released

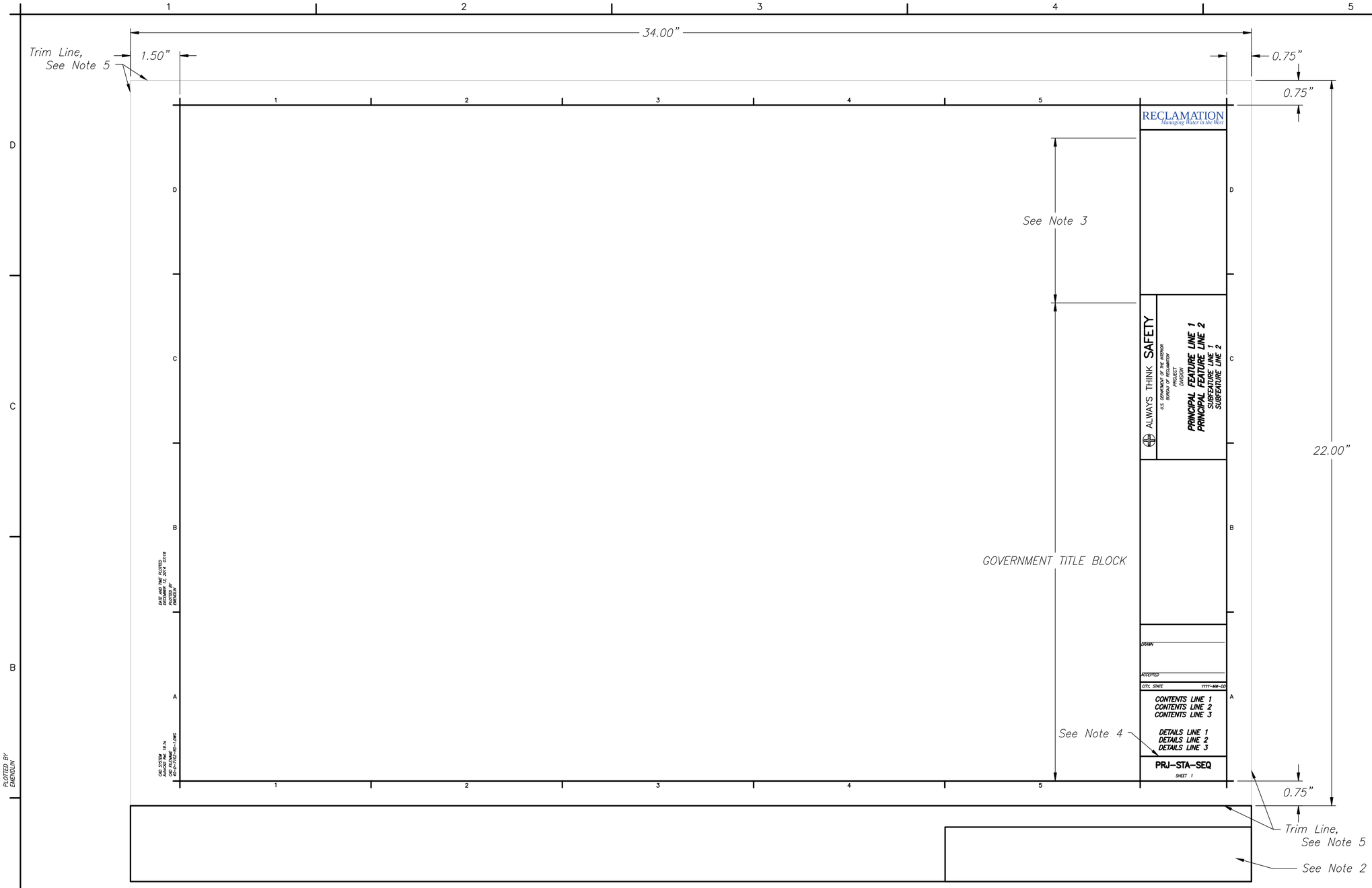

DRAWING BORDER

ALWAYS THINK SAFETY

U.S. DEPARTMENT OF THE INTERIOR
BUREAU OF RECLAMATION
YAKIMA PROJECT
KENNEWICK DIVISION

CHANDLER PUMPING PLANT

SWITCHYARD

SAMPLE TITLE

MANUFACTURER OR CONTRACTOR
DRAWN

ACCEPTED

SAMPLE SIGNATURE LINES

NOTES

1. Government will provide contractor with an electronic AutoCAD template to be used by manufacturer for submittal of manufacturer's/contractors drawing in Government format.
2. The manufacturer's title block and drawing revisions as a result of the submittal process, may be located anywhere outside of the trim lines. The location shown on this drawing is the Government's preferred area.
3. The manufacturer shall show the Government solicitation/specification number, the manufacturer's name, drawing and sheet number in this area.
4. Government drawing number(s) will be issued at the end of the submittal process and drawing will be entered into the Government's electronic drawing system by the Government.
5. Trim lines shall be shown on all submitted drawings.

RECLAMATION
Managing Water in the West

ALWAYS THINK SAFETY
U.S. DEPARTMENT OF THE INTERIOR
BUREAU OF RECLAMATION
STANDARD DRAWINGS

STANDARD AND TYPICAL DESIGNS

GOVERNMENT DRAWING FORMAT

REV NO		
2	2015-03-25	D UPDATED TITLE BLOCK AND SIGNATURE LINES
1	2014-12-17	D UPDATED TITLE BLOCK AND SIGNATURE LINES
	Barthel, Rodney J P.E.	
	E. MENDLIN	

S. NITA
DESIGNED
S. NITA
DRAWN
D. CRAWFORD
CHECKED
R. BARTHEL, P.E.
TECH. APPR.
R. W. LAFOND, P.E.
APPROVED
ADMIN APPROVAL –

DENVER, CO

DRAWING BORDER, SAMPLE TITLE BLOCK, AND SIGNATURE LINES

40-D-7102

SHEET 1

MISCELLANEOUS DESIGNATIONS

ALT — Alternator
A — Suffix designation for auxilliary control circuit
ASC — Adjustable speed controller
BFV — Butterfly valve
C or CAP — Capacitor
CB — Circuit breaker
CLF — Current limiting fuse
CNT — Counter
DV — Discharge valve
EXC — Exciter
FU — Fuse
GFCI — Ground fault circuit interrupter
GRD — Ground
GRS — Galvanized rigid steel conduit
GV — Gate or guard valve
HR — Hand reset (Use as suffix)
I — Input
IL — Indicating lamp, add prefix for color
IMC — Intermediate steel conduit
MCE — Motor control equipment (2500 – 5000 volts)
M — Motor
MCC — Motor control center (600 – volts and lower)
NP — Nameplate
NC — Normally closed
NO — Normally opened
NSPB — Nonsegregated phase bus
O — Output
PB — Pushbutton (Momentary contact type)
PBM — Pushbutton (Maintaining contact type)
PC — Programmable controller
PR — Probe operated relay (Refer to FS for suffix)
REC — Rectifier
R/I — Resistance to current transducer
SF — Service factor
SO — Solenoid oiler
SV — Solenoid operated valve
TE — Time delay on energization
TD — Time delay on deenergization
TT — Thermal switch
V/I — Voltage to current transducer
VLV — Valve
WL — Water level contact on telemeter receiver (Refer to FS for suffix)

WRM — Wound rotor motor
X,Y,X — Suffix for auxiliary relay, switch, or contactor (ALX,CSX,FLX, ect.)

–1,–2,–3, etc. — Suffix for unit number for pumping units, gates, valves, ect.

1,2,3, etc. — Suffix for electrical device numbering, such as TR1, TR2, ect.

* — Estimated rating

RELAY DESIGNATIONS

AL — Alarm relay
BG — Bearing temperature relay
CR — Control relay
FL — Field loss relay
FR — Field application relay
GP — Ground protective relay
IS — Incomplete sequence relay
LO — Lockout relay
OC — Overcurrent relay
OL — Overload relay
OV — Overvoltage relay
PO — Pullout (Loss of synchronism relay)
RC — Remote control relay
RSR — Remote sensing relay
SC — Squirrel cage (damper winding(relay
SR — Shift register
TR — Time delay relay
UF — Under frequency relay
UV–OVR — Undervoltage single and reverse phase relay
WT — Winding temperature relay

CONTACTOR DESIGNATIONS

FC — Field contactor
LC — Lighting contactor
M — Main contactor
MA — Air compressor motor contactor
MF — Vent fan motor contactor
MG* — Gate motor contactor
MO* — Oil pump motor contactor
MV* — Valve motor contactor
*Use suffix as application
–C Closing function
–L Lowering function
–O Opening function
–R Rasing function
S — Starting contractor
1S — Start contactor } Reduced voltage starting
2S — Start transition contactor } Reduced voltage starting
R — Run contactor } Reduced voltage starting

SWITCH DESIGNATIONS

CS — Control switch
FCD — Foreign circuit disconnect switch
FS — Float switch (Use suffix letter_ _ C–canal, P–pipe, R–reservoir, S–sump, T–tank)
LS — Limit switch
PS — Pressure switch
SS — Selector switch
TQ — Torque switch
TSW — Transfer switch

TRANSFORMER DESIGNATIONS

CCT — Control circuit transformer
CT — Current transformer
PT — Potential transformer
T — Transformer
TH — Transformer oil temperature
TL — Transformer oil level
TP — Transformer pressure relief
SST — Station service transformer

INSTRUMENT AND METER DESIGNATIONS

AM — Ammeter
AS — Ammeter transfer switch
CNT — Start counter
INT — Integrating instrument
PF — Power–factor meter
PST — Phase shifting transformer
RDM — Recording demand meter
TM — Time meter
V — Voltmeter
VAR — Varmeter
VARH — Varhour meter
VS — Voltmeter transfer switch
W — Wattmeter
WH — Watthour meter
WHD — Watthour demand meter
(R) — Indicates recording instruments
The asterisk is not part of the symbol.
Replace the asterisk with letter or letters depending on the function of the instrument.

DEVICE SYMBOLS

CS — Control switch
AS — Ammeter transfer switch
VS — Voltmeter tansfer switch
Surge arrester
Capacitor
Reactor
Potential transformer
Current transformer
Power or distribution transformer
3ø, Wye grounded connection
3ø, Delta connection
3ø, Broken delta connection
3ø Open delta connection (corner grounded)

Disconnecting switch
Liquid level switch (Normally open)
Vacuum and pressure switch (Normally closed)
Temperature actuated switch (Normally open)
Flow actuated switch (Normally open)
Limit switch–direct actuated (Normally open)
Torque switch (Normally closed)
3–Position selector switch
Air circuit breaker thermomagetic trip 1 Frame size, 2 Inverse time trip, 3 Instantaneous trip
1 Rectifier, 2 Reactor, 3 Inverter
Silicon controlled rectifier (Solid state DC switch)
Air circuit breaker, electrically operated
Air circuit breaker, withdraw type
Contactor with thermal trip
Contactor with magnetic trip
Contactor with CT and magnetic trip relay
Contactor (Normally open)
Contactor (Normally closed)
Auxiliary contactor (Closes when main device is closed)
Auxiliary contactor (Open when main device is closed)
Relay contact number
Relay coil, contactor coil
Horn–gap disconnectiong switch
Fuse
Fuse, current limiting type
Instrument shunt
Resistor
Rheostat, or potentiometer
Separable connector
Indicating lamp W–white, R–red, G–green, Y–yellow, A–amber, B–blue
Battery
Bell
Horn
Pushbutton (Normally open, momentary contact)
Pushbutton (Normally closed, momentary contact)
Maintained contact pushbutton

Probe, water level detector
Load interrupter switch
Motor
Triac (Solid state AC switch)
Wound rotor motor

WIRING SYMBOLS

Ground connection
Interconnection between separately owned systems
Duplex single–gang plug receptacle
Single wectherproof plug receptacle
Watertight three–phase power receptacle
Single pole switch
Three way switch
Luminaire, letter indicates type, number indicates wattage
Represents connection from external equipment. Does not necessarily represent a terminal block.
High voltage cable termination
Represents connection from external equipment via–multi–pair control (signal) cable.

GROUND SYMBOLS

Cable exposed
Cable embedded in concrete
Cable concealed but not embedded
Cable buried directly in earth
Ground rod
Welded or bolted connection
Cable riser
Indicates ground when required for clarity
Ground connector per 40–D–4334, Fig. 4
Ground ring

CONDUIT SYMBOLS

Exposed
Embedded in concrete
Concealed but not embedded
Buried directly in earth
Bending toward observer
Bending away from observer
Capped
Pull box or junction box
Designation number
Liquid tight flexible metal conduit
Sealing bushing, conduit to cable

NOTES

1. If designations and symbols other than the ones shown on this drawing used, they shall be shown on the approprate drawing.
2. For additional designations and symbols refer to NEMA Standards Pub, ICS–1970.
3. Contacts in control circuits are shown in the deenergized position. Liquid level switches are shown with liquid container empty. Vaccum and pressure switches are shown at ambient pressure. Temperature switches are shown at ambient temperature.

3 – 24 – 00 D.G.	REVISED TITLE BLOCK AND REDRAWN IN AUTOCAD 14.
3 – 11 – 81 D – D.G.	MINOR REVISIONS

ALWAYS THINK SAFETY

UNITED STATES
DEPARTMENT OF THE INTERIOR
BUREAU OF RECLAMATION
STANDARD DESIGNS

PUMPING PLANT
ELECTRICAL INSTALLATIONS
DESIGNATIONS AND SYMBOLS

DESIGNED N.J.B. TECH. APPR. P.L. ANNA
DRAWN D.D. GROULLARD SUBMITTED S.M. DENTON
CHECKED E.M.T. APPROVED M.H. KIGHT
CHIEF ELECTRICAL BRANCH

CADD SYSTEM AutoCAD Rel. 14.01b DENVER, COLORADO
CADD FILENAME 1040757.DWG FEBRUARY 13, 1982
DATE AND TIME PLOTTED MARCH 30, 2000 14:46

104–D–757

104-D-1150

IEEE STANDARD CONTROL & PROTECTION DEVICE FUNCTION NUMBERS

(SEE NOTES 1, 2, AND 3)

01___Master Element
02___Time-Delay Starting or Closing Relay (TDPU)
03___Checking or Interlocking Relay
04___Master Contactor
05___Stopping Device
06___Starting Circuit Breaker
07___Rate-of-Change Relay
08___Control Power Disconnecting Device
09___Reversing Device
10___Unit Sequence Switch
11___ Multifunction Device
12___Overspeed Device
13___Synchronous-speed Device
14___Underspeed Device
15___Speed or Frequency Matching Device
16___Reserved for future application
17___Shunting or Discharge Switch
18___Accelerating or Decelerating Device
19___Starting-to-Running Transition Contactor
20___Electrically Operated Valve
21___Distance Relay
22___Equalizer Circuit Breaker
23___Temperature Control Device
24___Volts Per Hertz Relay
25___Synchronizing or Synchronism-Check Device
26___Apparatus Thermal Device
27___Undervoltage Relay
28___Flame Detector
29___Isolating Contactor
30___Annunciator Relay
31___Separate Excitation Device
32___Directional Power Relay
33___Position Switch
34___Master Sequence Device
35___Brush-Operating or Slip-Ring Short-Circuiting Device
36___Polarity or Polarizing Voltage Device
37___Undercurrent or Underpower Relay
38___Bearing Protective Device
39___Mechanical Condition Monitor
40___Field Relay
41___Field Circuit Breaker
42___Running Circuit Breaker
43___Manual Transfer or Selector Device
44___Unit Sequence Starting Relay
45___Atmospheric Condition Monitor
46___Reverse-Phase or Phase-Balance Current Relay
47___Phase-Sequence Voltage Relay
48___Incomplete Sequence Relay
49___Machine or Transformer Thermal Relay
50___Instantaneous Overcurrent or Rate-of-Rise Relay
51___AC Time Overcurrent Relay
52___AC Circuit Breaker
53___Exciter or DC Generator Relay
54___Turning Gear Engaging Device
55___Power Factor Relay
56___Field Application Relay
57___Short-Circuiting or Grounding Device
58___Rectification Failure Relay
59___Overvoltage Relay
60___Voltage or Current Balance Relay
61___Density Switch or Sensor
62___Time-Delay Stopping or Opening Relay (TDDO)
63___Pressure Switch
64___Ground Detector Relay
65___Governor
66___Notching or Jogging Device
67___AC Directional Overcurrent Relay
68___Blocking Relay
69___Permissive Control Device
70___Rheostat
71___Level Switch
72___DC Circuit Breaker
73___Load-Resistor Contactor
74___Alarm Relay
75___Position Changing Mechanism
76___DC Overcurrent Relay
77___Pulse Transmitter
78___Phase-Angle Measuring or Out-of-Step Protective Relay
79___AC Reclosing Relay
80___Flow Switch
81___Frequency Relay
82___DC Reclosing Relay
83___Automatic Selective Control or Transfer Relay
84___Operating Mechanism
85___Carrier or Pilot-Wire Receiver Relay
86___Lockout Relay
87___Differential Protective Relay
88___Auxiliary Motor or Motor Generator
89___Line Switch
90___Regulating Device
91___Voltage Directional Relay
92___Voltage and Power Directional Relay
93___Field-Changing Contactor
94___Tripping or Trip-Free Relay
95___Reserved for future application
96___Reserved for future application
97___Reserved for future application
98___Creep Detector Device
99___Reserved for future application

FIRST LETTER SUFFIX OF THE DEVICE DESIGNATION

(SEE NOTES 1, 2, AND 3)

A___Governor System (or Actuator Systems--gates)
B___Battery Charging & Monitoring System
C___High-Voltage Cable System
D___Data Acquisition System
E___Excitation System including Transformer and Regulator but not Main Field
F___Fire and CO2 System
G___Main Generator including Auxiliary Systems
G/M___Generator Motor including Auxiliary Systems in Pumped Storage Applications
H___Turbine or Main Pump Including Auxiliary Systems
I___Isolated and Other Power Bus Systems (not High Voltage Cable)
J___Power Circuit Breaker including Auxiliary Systems
K___Power Transformer including Auxiliary Systems
L___Annunciator System, Security System
M___Main Pump Motor including Auxiliary Systems and Variable Speed Drive
N___Air (Pneumatic) System
O___Not used
P___Penstock or Discharge Line System
Q___Oil Storage, Handling, Purification System
R___Field Flashing System or Phase Reversal Switch including Auxiliary Systems
S___Station Service Substation System including Engine/Generator System
T___Tone and Transfer Trip System
U___Unit Control Circuit System or Uninterruptible Power Supply System
V___Intake and/or Discharge Valve System
W___Water Systems including Intake/Outlet Works and Plant Water and Sump Systems
X___Defined for systems unique to a facility
Y___Defined for systems unique to a facility
Z___Defined for systems unique to a facility

SECOND AND SUBSEQUENT LETTER SUFFIXES OF THE DEVICE DESIGNATION

(SEE NOTES 1, 2, AND 3)

A___Abnormal, A.C., Acceleration, Admission, Alarm, Amperes, Automatic, Auxiliaries, Phase A, etc.
B___Backup, Bearing, Block, Blower, Booster, Brakes, Bus, Button, Bypass, Phase B, etc.
C___Cable, Carrier, Charger, Check, Chlorination, Close, Collector, Common, Compensator, Compressor, Control, Cooling, Current, Cycle, Cylinder, Phase C, Conveyor, etc.
D___D.C., Deceleration, Delay, Depress, Detector, Dielectric, Differential, Discharge, Disconnect, Discordance, Domestic, Down, Downstream, Draft Tube, Drain, etc.
E___Ejector, Elevator, Emergency, Explosive, etc.
F___Failure, Fan, Fault, Feeder, Field, Filter, Fire, Flame, Flow, Follower, Forward, Frequency, Full, Fumes, Fuse, etc.
G___Gas, Gate, Gating (SCR), Generate, Ground, Guide Bearing, etc.
H___Halon, Hand, Heat, Heaters, High, Hoist, Horn, Hot, Housing, Hydropneumatic Tank, etc.
I___Indication, Initial, Inlet, Input, Instantaneous, Intake, Interface, Interlock, Interrupt, Inverter, Ionization, etc.
J___Jacking, Jet, etc.
K___Key, Transformer
L___Lamps. Left, Level, Lights, Limit, Line, Liquid, Local, Logic, Loss, Louvers, Low, Lower, Lubrication, etc.
M___Main, Malfunction, Manual, Meter, Metering, Motor, etc.
N___Negative, Network, Neutral, Normal, etc.
O___Open, Outlet, Output, etc.
P___Packing Box, Parallel, Parameter, Penstock, Phase, Phaseback, Pilot, Pit, Position, Positive, Potential, Pothead, Power, Pressure, Primary, Protection, Pulse, Pump, Purification, Push, etc.
Q___Oil, etc.
R___Raise, Reactor, Reclose, Record, Rectifier, Reed, Refrigeration, Regulate, Relay, Release, Relief, Remote, Reservoir, Reset, Resistor, Right, Rotation, Rotor, Runner, etc.
S___Seals, Secondary, Selector, Sewage, Shorting, Shutdown, Signal, Skimmer, Sludge, Smoke, Solenoid, Speed, Spiral or Scroll Case, Splice, Stabilizer, Standby, Starting, Stator, Stepping, Storage, Strainer, Suction, Sump, Supply, Switch, Synchronizing, etc.
T___Tank, Temperature, Test, Thermal, Thrust Bearing, Thyratron, Tie, Time, Transducer, Transfer, Transmitter, Trip, Trouble, Trashrake, etc.
U___Unit, Unloader, Unwatering, Up, Upper, Upstream, etc.
V___Valve, Vars, Vibration, Voltage, etc.
W___Water, Watts, Winding, etc.
X___Auxiliary Device, etc.
Y___Auxiliary to Device X, Antipump Relay. etc.
Z___Auxiliary to Device Y

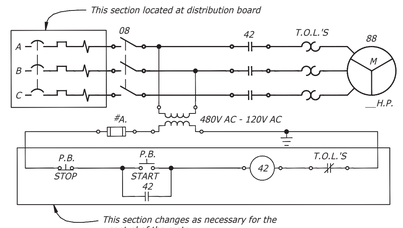

BASIC MOTOR CONTACTOR SCHEMATIC

DEVICE SYMBOLS

(SEE NOTES 5 AND 6)

RELAY COIL, SOLENOID COIL OR CONTACTOR COIL
INDICATING LAMP
INDICATING METER
RECORDING METER
INTEGRATING METER
TRANSFER SWITCH
TRANSDUCER
TELEMETRY
TELEMETRY FOR REMOTE INDICATION
TELEMETRY FOR REMOTE LOGGING AND/OR RECORDING
TELEMETRY FOR REMOTE RECORDING AND/OR LOGGING ASSOCIATED WITH AUTOMATIC GENERATION CONTROL
MICROWAVE, TRANSMITTER-RECEIVER, FOR RELAYING (SEE NOTE 7)
MICROWAVE, TRANSMITTER-RECEIVER, FOR SUPERVISORY CONTROL (SEE NOTE 7)
MICROWAVE, TRANSMITTER-RECEIVER FOR TELEMETERING (SEE NOTE 7)
REMOVABLE LINK
DEVICE TERMINAL POINT (SEE NOTE 11)
CONTACT, NORMALLY OPEN (SEE NOTE 8)
CONTACT, NORMALLY CLOSED (SEE NOTE 8)
PUSHBUTTON, NORMALLY CLOSED
PUSHBUTTON, NORMALLY OPEN
PUSHBUTTON, MAINTAINED
CONTACTOR WITH THERMAL OVERLOAD TRIP ELEMENT
CONTACTOR WITH MAGNETIC TRIP ELEMENT
THERMAL OVERLOAD DEVICE
MAGNETIC OVERLOAD DEVICE
THERMOMAGNETIC OVERLOAD DEVICE
TIME DELAY MAGNETIC OVERLOAD DEVICE
FUSE
FUSE, CURRENT LIMITING TYPE
RESISTOR
RESISTOR, VARIABLE
RESISTOR, TAPPED
VARISTOR
THYRISTOR OR TRIAC
DIODE
ZENER DIODE
SEMI-CONDUCTOR CONTROLLED RECTIFIER (SCR)
RESISTANCE TEMPERATURE DETECTOR (RTD)
INSTRUMENT SHUNT
CAPACITOR

REACTOR
THERMOCOUPLE
LIGHTNING OR SURGE ARRESTER
PROTECTIVE GAP
HORN GAP
CABLE TERMINATION
BELL
HORN
BUZZER
CARRIER FREQUENCY WAVE TRAP
MECHANICAL INTERLOCK
KEY INTERLOCK
ELECTRICAL INTERLOCK
REPRESENTS CONNECTION FROM EXTERNAL EQUIPMENT, DOES NOT NECESSARILY REPRESENT A TERMINAL POINT
SYNCHRO (SELF-SYNCHRONOUS) DEVICE FOR POSITION INDICATION OR CONTROL
THREE-PHASE, 3-WIRE, DELTA
THREE-PHASE, BROKEN DELTA
THREE-PHASE, OPEN DELTA
THREE-PHASE, Y (OR STAR), UNGROUNDED
THREE-PHASE, Y (OR STAR), WITH NEUTRAL BROUGHT OUT AND GROUNDED
THREE-PHASE, ZIG-ZAG, UNGROUNDED
--- SEE NOTE 9 ---
A.C. GENERATOR, MOTOR OR CONDENSER, BASIC SYMBOL
SQUIRREL CAGE INDUCTION MOTOR
SLIP-RING OR WOUND ROTOR INDUCTION MOTOR
SYNCHRONOUS GENERATOR MOTOR OR CONDENSER WITH DIRECT CURRENT FIELD EXCITATION
SYNCHRONOUS CONVERTER
D.C. GENERATOR, MOTOR OR CONDENSER, BASIC SYMBOL
D.C. GENERATOR, MOTOR OR CONDENSER WITH SHUNT AND SERIES FIELD
SPLIT FIELD MOTOR
DIRECT CONNECTED UNITS. USE BASIC AC OR DC GENERATOR OR MOTOR SYMBOLS
USE MANUFACTURERS DIAGRAM ROTATING AMPLIFIER
PERMANENT MAGNET GENERATOR
SINGLE-PHASE TWO-WINDING TRANSFORMER
POLYPHASE TRANSFORMER
THREE-WINDING TRANSFORMER
AUTOTRANSFORMER OR COMPENSATOR
CONSTANT-CURRENT TRANSFORMER

LOAD-RATIO CONTROL TRANSFORMER WITH TAPS
STEP-VOLTAGE REGULATOR OR LOAD-RATIO CONTROL AUTOTRANSFORMER
CURRENT TRANSFORMER (C.T.), WOUND TYPE
CURRENT TRANSFORMER (C.T.), BUSHING TYPE
POTENTIAL TRANSFORMER (P.T.)
CAPACITOR-BUSHING POTENTIAL DEVICE
CARRIER-COUPLING CAPACITOR POTENTIAL DEVICE
TO CARRIER EQUIPMENT
DISCONNECTING SWITCH, HOOK-STICK-OPERATED
DISCONNECTING SWITCH, MANUALLY-GANG-OPERATED
AIR-BREAK SWITCH, HORN GAP, MANUALLY-GANG-OPERATED
DISCONNECTING SWITCH, MOTOR-OPERATED
INTERRUPTER SWITCH
MANUALLY OPENED, ELECTRICALLY TRIPPED GROUNDING SWITCH
FUSED DISCONNECT SWITCH
POWER CIRCUIT BREAKER
POWER CIRCUIT BREAKER, DRAWOUT TYPE
AIR CIRCUIT BREAKER
AIR CIRCUIT BREAKER, DRAWOUT TYPE
AIR CIRCUIT BREAKER WITH ELECTRICAL TRIP
3-POLE CIRCUIT BREAKER WITH THERMAL-OVERLOAD DEVICE OR INVERSE-TIME-TRIP ELEMENT IN ALL 3 POLES
3-POLE CIRCUIT BREAKER WITH MAGNETIC-OVERLOAD DEVICE OR INSTANTANEOUS-TRIP ELEMENT IN ALL 3 POLES

NOTES

1. Select the most appropriate ANSI device function number which identifies the device used by function and the most appropriate suffix letters which further identify the device by system, subsystem, quantity or condition monitored or controlled.

Examples: 127UC....Unit 1 Unit Control Bus Undervoltage Relay
251EF....Unit 2 Exciter Field Time Delay Overcurrent Relay
71WSH....Plant Sump High Water Level Switch

2. Device numbers 1 through 99 are used for the overall plant and switchyard operation. Device numbers 101 through 199, 201 through 299, 301 through 399, etc. are used for Units 1, 2, 3, etc. Device numbers prefixed by letters RE indicates devices controlled by a supervisory system.

3. No device designation shall be duplicated in the plant or switchyard. When two or more devices perform exactly the same function, the designations will be followed by a number, starting at number 1, to differentiate between the devices.

Examples: 127UCX1, 2.....Auxiliary Relays to Device 127UC
71WSHX1, 2, 3...Auxiliary Relays to Device 71WSH
104UC1, 2.....Unit 1 Master Control Starting Relays

4. All schematic diagrams shall have an explanation list for devices shown on that diagram. This explanation list shall consist of a device designation with a concise description for each device and be located above the title block (e.g. See the examples in Notes 1 and 3 above).

5. This list of device symbols shows the preferred symbol to be used on Bureau of Reclamation single-line and schematic diagrams.

6. The following symbols are not part of the device symbols they are shown with, always replace these symbols by the following:

*....Show device function numbers and letter suffixes within circle.

▽....Show color of lamp by the following: A-Amber, B-Blue, C-Clear, G-Green, O-Orange, R-Red, W-White.

■....Substitute symbol from the following list:

A - Ammeter	PH - Phase Meter
AH - Ampere-hour Meter	PI - Position Indication
CMA - Contact-making Ammeter	RF - Reactive Factor Meter
CMC - Contact-making Clock	RPM - Speed Indicator
CMV - Contact-making Voltmeter	SY - Synchroscope
DM - Demand Meter	T - Temperature Meter
ETM - Elapsed Time Meter	TS - Time Switch
F - Frequency Meter	V - Voltmeter
G - Galvanometer	VAR - Varmeter
GD - Ground Detector	VH - Varhour Meter
OHM - Ohmmeter	W - Watt Meter
OSC - Oscillograph	WH - Watthour Meter
PF - Power Factor Meter	WHDM - Watthour-demand Meter

Use "R" in front of letters for a recording type meter.

□....Show location to which data or information is being telemetered.

●...Show device function numbers and letter suffixes.

⬭...Show a descriptive note, letter, abbreviation or word to indicate when the contact opens or closes. For latching relays, selector or control switches, use the normally open contact with a letter or word indicating when the contact closes. For time delay relays use TDC or TDO for contacts. All other relay contacts do not require any descriptive note.

△....Show TR for torque-synchro receiver or TX for torque-synchro transmitter.

┼....Show C, M, or G within symbol. Internal connections for A.C. machines should be shown, e.g. three phase, single phase, etc.

⬡....Show S.T. for shunt trip, R.C.T. for reverse current trip, U.V. for undervoltage trip, etc.

7. Channels are via microwave or leased facilities, not via powerline carriers.

8. These contact symbols apply to the following devices: control, flow, level, limit, position, pressure, speed, and temperature switches; relays; contactors; auxiliary contacts; etc. For selector switches, always use a normally-open contact with the position(s) the contact is closed listed below contact.

9. The symbols shown before this point are used on single-line and schematic diagrams. The symbols shown after this point are used as follows: the left-hand symbols are used on single-line diagrams; the right-hand symbols are used on schematic diagrams.

10. All devices shall be shown in the nonoperated and deenergized positions, e.g. breakers shall be open; latching relays shall be in the reset position; selector switches shall be in the off position; level switches shall be in the empty container state, pressure switches shall be in the ambient pressure state; temperature switches shall be in the ambient temperature state; valves, gates, and doors shall be shown in the closed position; etc.

11. All devices, shown on schematic diagrams, shall be shown with their device terminal points numbered and/or lettered for identification of internals for wiring purposes.

12. Whenever this drawing and drawing number 104-D-757 are both referenced, the designations and symbols shown on this drawing shall take precedence over those shown on 104-D-757.

This drawing supersedes drawings 104-D-200 through 104-D-214.

REV NO		
5	2020-02-07 Welsh, Richard A. P.E.	SHADED IN TOP OVAL FOR NOTE 6. ("SHOW DEVICE FUNCTION NUMBERS...") CLARIFIED NOTE 8 FOR SELECTOR SWITCHES
6-24-2003 D- L.G.	REVISED STANDARDS REFERENCES.	
4-4-00 D- L.G.	REDRAWN IN AUTOCAD.	
6 - 1 - 90 D- J.W.R.	ADDED LIST OF SPERCEDED DRAWINGS, NEW TITLE BLOCK AND DRAWING NUMBER IN UPPER LEFT CORNER.	

ALWAYS THINK SAFETY

UNITED STATES
DEPARTMENT OF THE INTERIOR
BUREAU OF RECLAMATION
STANDARD DESIGNS

MAJOR POWER/PUMPING PLANTS
ELECTRICAL INSTALLATION
DEVICE DESIGNATIONS AND SYMBOLS
TO BE USED ON
SINGLE-LINE AND SCHEMATIC DIAGRAMS

DESIGNED R.W.M. — TECHNICAL APPROVAL J. REIF
DRAWN D.D. DROUILARD — SUBMITTED H.H. VANDERPLAATS
CHECKED P.W. — APPROVED R.H. AUERBACH, CHIEF, ELECTRICAL BRANCH

CADD SYSTEM	CADD FILENAME	DATE AND TIME PLOTTED
AutoCAD Rel. 21.06	104-D-1150-RD-1.DWG	OCTOBER 24, 2017 09:33
DENVER, COLORADO	<> OCTOBER 21,1983	104-D-1150

RECLAMATION
Managing Water in the West

ALWAYS THINK SAFETY

U.S. DEPARTMENT OF THE INTERIOR
BUREAU OF RECLAMATION
DESIGN DATA (ELECTRICAL)

MAJOR POWER_PUMPING PLANTS
ELECTRICAL INSTALLATION

REV NO			
D	2019-09-06	CONTRACT NO. R17PC00063 SPECIFICATION NO. 20-C0860	
5.2			

DRAWN

ACCEPTED

D 1983-10-20

DEVICE DESIGNATIONS AND SYMBOLS USED ON

SINGLE-LINE AND SCHEMATIC DIAGRAMS

104-D-1150

SHEET 1

DATE AND TIME PLOTTED SEPTEMBER 2, 2016 14:00
PLOTTED BY KCOVERS

CAD SYSTEM AutoCAD Rel. 20.1s
CAD FILENAME 20-D-0400-RD-1.DWG

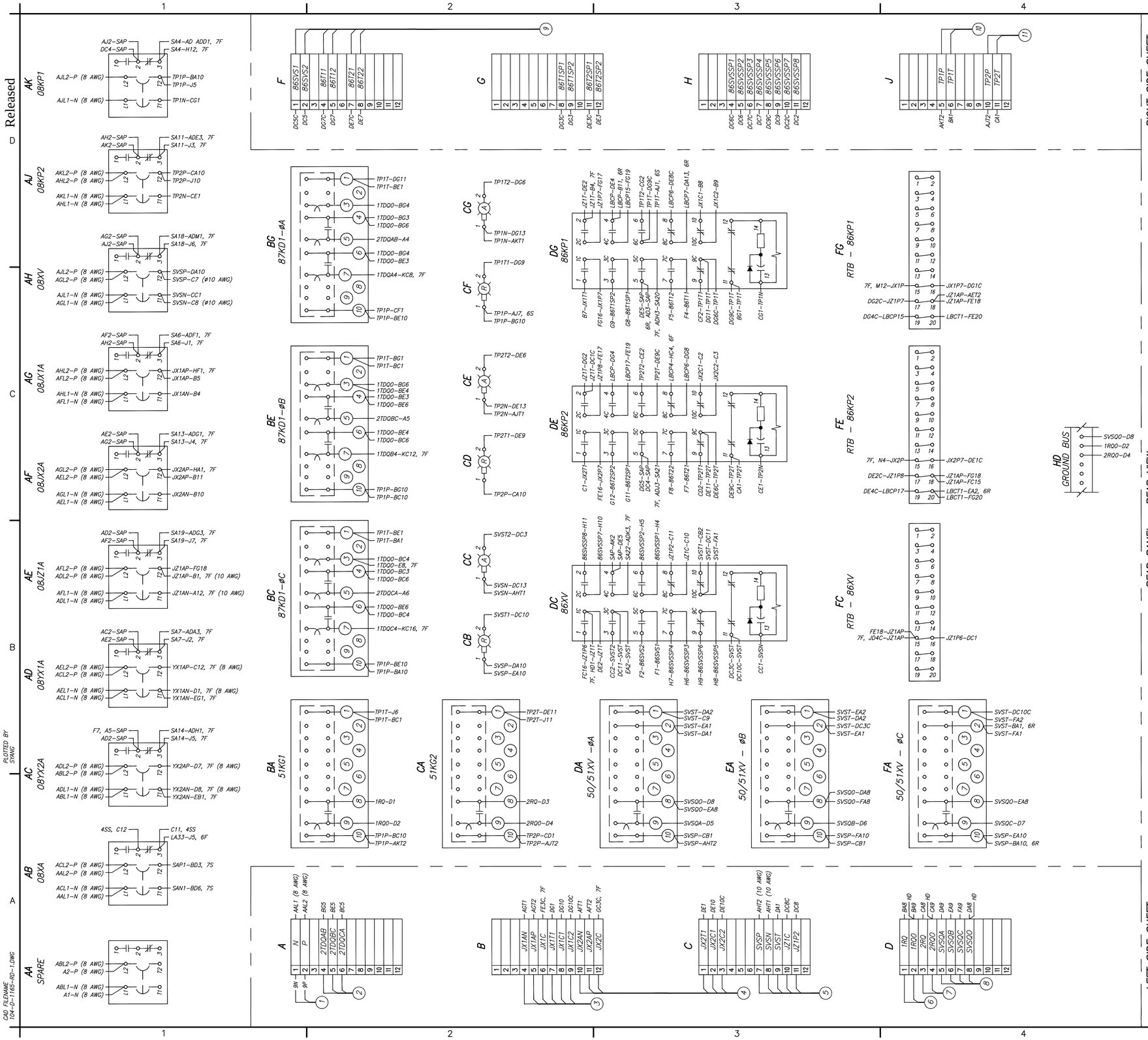

CABLE LIST

CABLE NUMBER	CABLE DESIGNATION	DESTINATION REFERENCE DRAWING	CABLE SIZE
1	9BSA-CSA7R	(6300)	2-1/C-8
2	1JX1A-CSA7R	(6121)	1-5/C-10
3	1CSA7R-JX1A	(6121)	1-9/C-10
4	2CSA7R-JX2A	(6230)	1-9/C-10
5	3CSA7R-JZ1A	(6249)	1-12/C-10
6	1KX1A-CSA7R	(6097)	1-3/C-10
7	1KX2A-CSA7R	(6201)	1-3/C-10
8	1JX1A-CSA7R	(6249)	1-5/C-10
9	4CSA7R-RTU	(6599)	1-12/C-16
10	5CSA7R-KX1A	(6097)	1-5/C-10
11	6CSA7R-KX2A	(6201)	1-5/C-10

EXPLANATION

POINT-TO-POINT WIRING DIAGRAMS

A. Double letters in bold face, such as AA, indicate the location of each device on the wiring diagram except for terminal blocks.

B. Single letters in bold face, such as A, indicate the location of each terminal block on the wiring diagram.

C. A control board is made of many sections which in turn are made of different panels. The sections are designated numerically 1 through "n" with "n" being the last section of the control board. The different panels are designated alphabetically as follows:
1. F – Indicates the front panel.
2. R – Indicates the rear panel.
3. S – Indicates the swing panel when there is only one swing panel per section.
4. FS and RS – Indicate the front and the rear swing panels, respectively, when there are two swing panels per section.
5. SS – Indicates the shipping split terminal block panel/section location.

D. All point-to-point wiring diagrams shall be drawn as follows:
1. All devices shown on the drawing shall represent the relative physical location of the devices.
2. Circuit (wire) designations shall be located next to the device stud (pin).
3. The circuit (wire) termination point shall be placed second from the device stud with a hyphen between the circuit designation and the circuit termination point.
4. The panel destination (number) of the wire shall be placed in the last position from the device stud with a comma between the circuit termination point and the panel destination. All panel wiring within the same panel will not require a panel destination.
5. Therefore, an example of point-to-point wiring is "LBCP4-HC4, 6F" which is located at device, DE, stud 8 on this drawing. The circuit (wire) designation is LBCP4. The circuit (wire) termination point is at device HC, stud (pin) number 4, located on the front panel of section 6.

NOTES

1. All cable shields and spare conductors shall be connected to the ground bus.

2. An internal wiring diagram of each type of protective relay, except lockout relays, shall be shown on a separate drawing. All other devices, including lockout relays, shall have their internal wiring diagrams shown on their external point-to-point wiring diagrams.

3. Do not edit the lineweights or text styles in this drawing. Only use text styles that are used in this drawing.

4. Do not explode or burst the titleblock. Contractor to edit titleblock information for each drawing based on information provided by Government. The titleblock information includes Subfeature, Contents, Details, and Drawing Number. Obtain latest version of Government titleblock and standards prior to commencing with Government Format Drawings.

5. The space below the Reclamation Logo at the top right side of the titleblock is reserved for manufacturer's information. At a minimum, include the following information in the space provided: Manufacturer's name, address, phone number, date, and solicitation number. Use Government provided block.

REFERENCE DRAWINGS

MAIN CONTROL BOARD CSA –
PANEL 6R WIRING DIAGRAM . . . . . XXX-X-XXXXX
MAIN CONTROL BOARD CSA –
PANEL 6F WIRING DIAGRAM . . . . . XXX-X-XXXXX
MAIN CONTROL BOARD CSA –
PANEL 7F WIRING DIAGRAM . . . . . XXX-X-XXXXX
MAIN CONTROL BOARD CSA –
PANEL 7S WIRING DIAGRAM . . . . . XXX-X-XXXXX

RECLAMATION
Managing Water in the West

Manufacturer Information
Name:
Address:
Phone:
Date:
Solicitation Number:
Other Info:

ALWAYS THINK SAFETY

U.S. DEPARTMENT OF THE INTERIOR
BUREAU OF RECLAMATION
DESIGN DATA (ELECTRICAL)
COLORADO

DESIGN DATA TYPICAL POWERPLANT_PUMPING PLANT
ELECTRICAL INSTALLATION

REV NO		
4.2	2019-03-03	D CONTRACT NO. R17PC00063 SPECIFICATION NO. 20-CQ860
4	2020-02-07 Welsh, Richard A. P.E.	D REVISED TO NEW DRAFTING STANDARDS.
2	2000-04-03 LG	D REDRAWN IN AUTOCAD.
1	1991-03-01 JWR	D REVISED TO NEW DRAFTING STANDARDS.

R.W. MC AFEE
DESIGNED
M.E. JOJOLA
DRAWN
R.W. MC AFEE
CHECKED
G.D. OSBURN
TECH. APPR.
F.W. COOK, SR
APPROVED
ADMIN APPROVAL – CHIEF, ELECTRICAL BRANCH
D 1990-12-20

MAIN CONTROL BOARD
CSA – PANEL 7R

WIRING DIAGRAM

104-D-1165
SHEET 1

DATE AND TIME PLOTTED OCTOBER 18, 2019 09:26
PLOTTED BY SYANG

CAD SYSTEM AutoCAD Rel. 23.0s
CAD FILENAME 104-D-1165-RD-1.DWG