PARTS LIST

PIECE NO.	QTY	DESCRIPTION	SPECIFICATION
1	4	Outer Side Plate	38" x 55" x 2", Mild Steel
2	1	Inner-Bottom Plate	36" x 36" x 2", Mild Steel
3	1	Outer-Bottom Plate	40" x 40" x 2", Mild Steel
4	4	Inner Side Plate	35" x 114" x 1", Mild Steel
5	3	Padeye	3 1/2" x 6" x 1 3/4", ASTM A131/A131M or MIL-S-22698 GRADE DH-36 Steel
6	1	Top Plate	36" x 36" x 1", Mild Steel
7	1	Modified Lift Channel	34" x 31" x 1/2", Mild Steel
8	1	Lift Channel	34" x 27" x 1/2", Mild Steel
9	1	Divider Plate	34" x 111" x 1/2", Mild Steel
10	2	Divider Plate 2	16 3/4" x 111" x 1/2", Mild Steel
11	1	Top Plate Gasket	36" x 36" x 1/4", Rubber, BUNA-N or Silicone, Durometer 20-40
12	16	Stud	1/2"-13, 4" Long
13	16	Locknut	1/2"-13, GRADE 8 Steel, MCMASTER-CARR P/N 90630A125 OR EQUIVALENT
14	16	Washer	0.531" ID, 1.25" OD, 18-8 Stainless Steel, MCMASTER-CARR P/N 92141A033 OR EQUIVALENT
15	2	Forklift Spacer	2" x 4" x 17", Mild Steel

REVISION HISTORY

ZONE	REV	DESCRIPTION	DATE	DRAWN BY	APPROVED BY
ALL	OI	ORIGINAL ISSUE	1/26/2018	A. FUENTES	R. HABERKORN
SH 1, 7, & 9	A	Modified dimensions for stud holes on PC 4, added threaded holes for top plate	4/17/2018	A. FUENTES	R. HABERKORN
SH 1 & 2	B	Updated PC number for Note 9. Corrected ASTM material ID.	4/18/2018	A. FUENTES	R. HABERKORN
SH 1, 7	C	Added dimension for lift hole (PC 6); corrected PC's 9 & 10 height	9/17/2018	A. FUENTES	R. HABERKORN
SH 1-9, & 11	D	Increased length of PC's 4, 9, and 10. Fixed minor dimensioning callouts.	2/10/2026	J. LEGGETT	M. KUMAR

SHEET REVISION STATUS

SHEET	1	2	3	4	5	6	7	8	9	10	11
REVISION	D	D	D	D	D	D	D	D	D	OI	D

COGNIZANT ENGINEER
JAKE LEGGETT (SOF) (C2370.2)
(757)396-1371 2/11/2026

CHECKED BY
ALYX DAVIDSON (SOF) (C2370.2)
(757)396-9669 2/12/2026

SUPERVISOR
MOLLY KUMAR (SOF) (C2370.2)
(757)396-8081 2/27/2026

CONCURRENCE
N/A

UNLESS OTHERWISE SPECIFIED, ALL DIMENSIONS ARE IN INCHES, AND TOLERANCES ARE AS FOLLOWS:

DECIMALS:
UP TO 24" = ± 1/8"
24" AND UP = ± 1/4"
Angles = ± 1 DEG

DRAWING DIMENSIONAL AND GEOMETRIC TOLERANCES ARE PER ASME Y14.5M-1994

NORFOLK NAVAL SHIPYARD
REACTOR SERVICING
C2370.2

NO DEVIATIONS SHALL BE MADE WITHOUT C2370 APPROVAL

TITLE
MTRA Disposal Box

Document No. 6174ZN03
Attachment (A)

SIZE	DWG NO	REV
A	2370.2-7407V	D

SCALE Not to scale | CAGE CODE 81601 | SHEET 1 of 11

FABRICATION NOTES

1. THIS DRAWING PROVIDES FABRICATION DETAILS FOR A MOTOR TUBE ROTOR ASSEMBLY DISPOSAL BOX.

2. BREAK ALL SHARP EDGES AND REMOVE ALL BURRS AND WELD SPLATTER. ALL OTHER SURFACES ARE TO BE FINISHED TO 250 RMS UNLESS OTHERWISE NOTED.

3. WELDING REQUIREMENTS:
   A. WELDING SHALL BE IN ACCORDANCE WITH AMERICAN WELDING SOCIETY D1.1.
   B. WELD SIZED SHOWN ARE MINIMUM REQUIREMENTS.
   C. SNIPE CORNERS IN THE WAY OF FILLETS AND EXISTING WELDS. CLOSE ALL SNIPES AT WELDING. SEQUENCE THE WELDING OF MATERIALS AS NECESSARY TO MINIMIZE DISTORTION.

4. EACH CONTAINER SHALL HAVE A BUNA-N OR SILICONE RUBBER GASKET FOR SEALING TOP. GASKET SHALL BE PROVIDED WITH A CURE DATE AND AT LEAST 85% OF SHELF LIFE REMAINING UPON SHIPMENT. SEE PC 11 FOR DETAILS.

5. NO CADMIUM IS TO BE USED ON BOX. DO NOT USE CADMIUM FASTENERS. STEEL FASTENERS SHALL HAVE A BLACKENED, ZINC PLATED FINISH, OR NO FINISH.

6. ALL DIMENSIONS ARE IN INCHES UNLESS OTHERWISE SPECIFIED.

7. PAINTING REQUIREMENTS:
   A. INTERIOR OF THE BOX WILL BE PRIMED WITH NON-HAZARDOUS, RUST INHIBITIVE PRIMER.
   B. EXTERIOR WILL BE LEFT AS BARE METAL.

8. PADEYES SHALL BE SHIPPED UN-ATTACHED TO BOX.

9. BOX SHALL BE SHIPPED WITH NON-LOCK NUTS INSTALLED ON STUDS (PC 12). SHIP LOCKING NUTS (PC 13) UNINSTALLED.

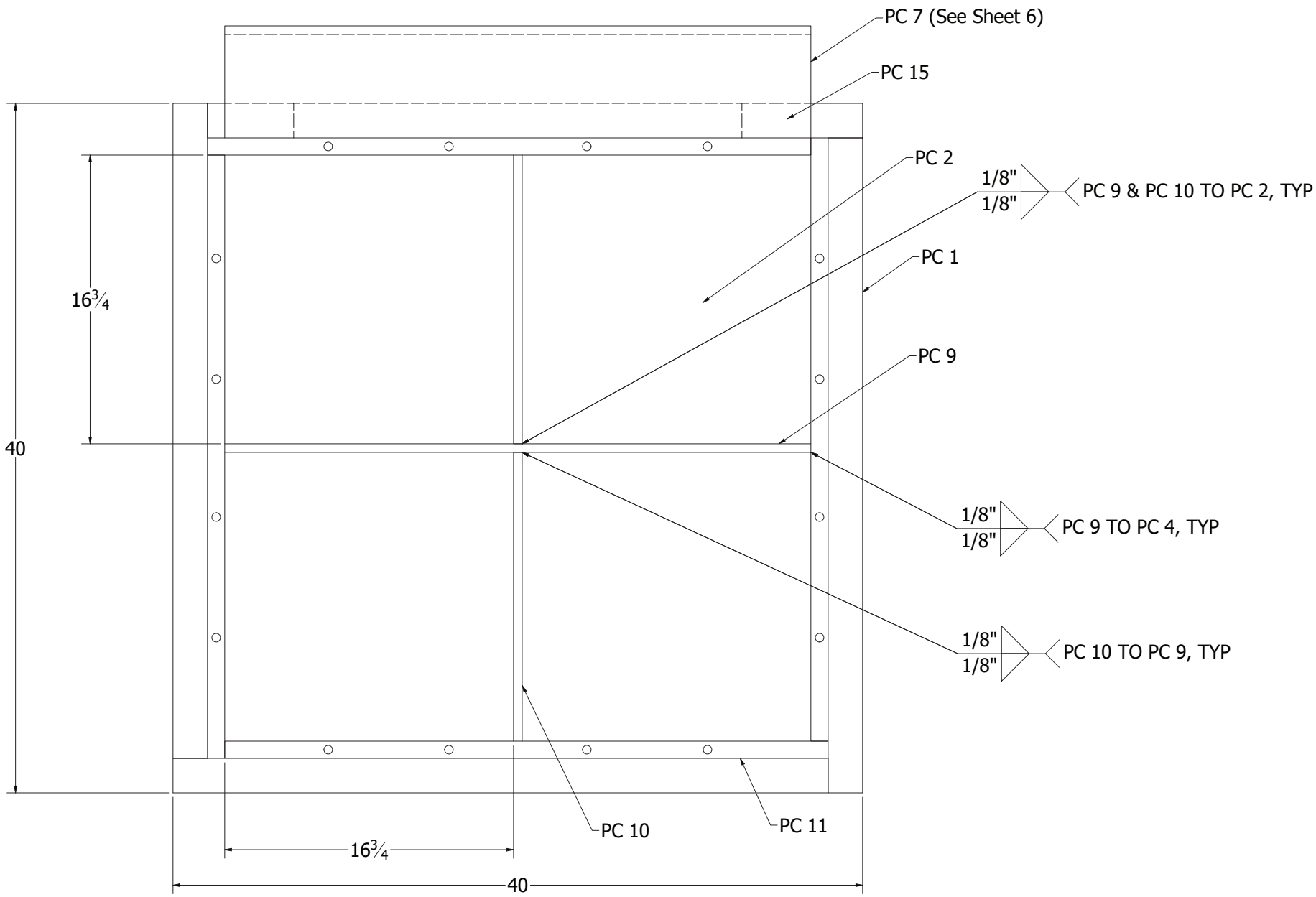

MTRA Disposal Box - Top View

NORFOLK NAVAL SHIPYARD REACTOR SERVICING C2370.2	NO DEVIATIONS SHALL BE MADE WITHOUT C2370 APPROVAL	TITLE MTRA Disposal Box	DRAWING NO. 2370.2-7407V	REV D	SHEET 3 of 11

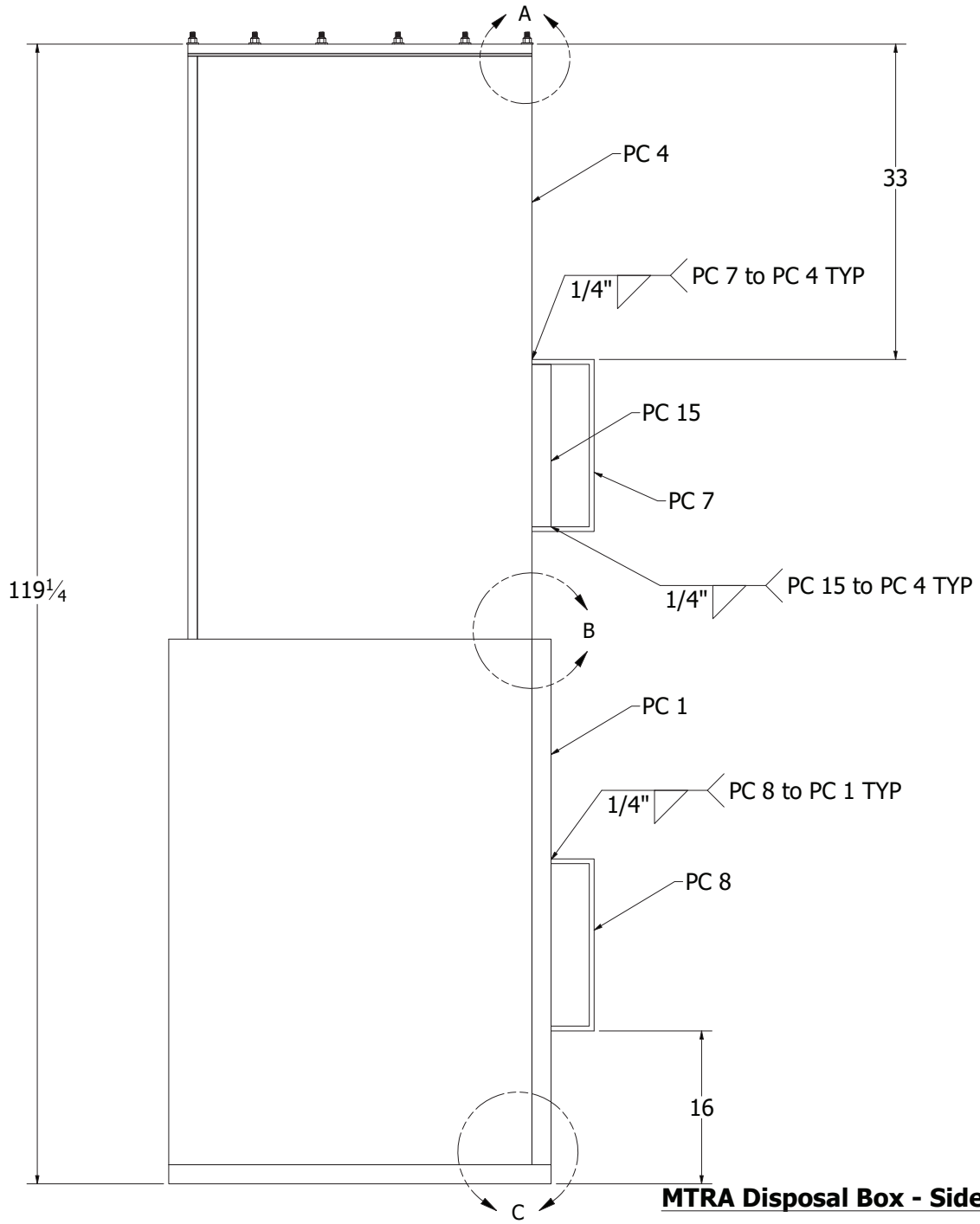

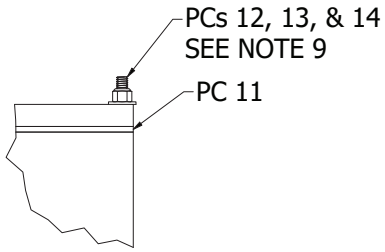

DETAIL A

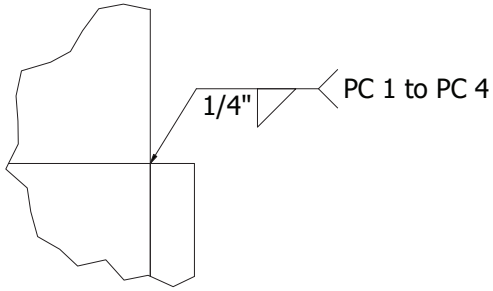

DETAIL B

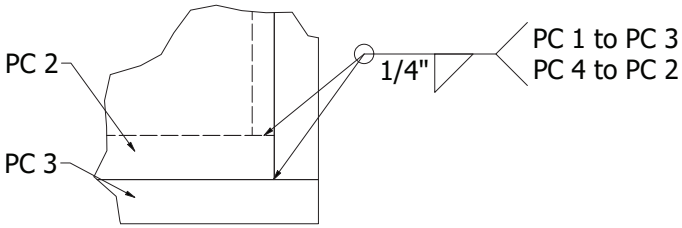

DETAIL C

MTRA Disposal Box - Side View w/Details

NORFOLK NAVAL SHIPYARD REACTOR SERVICING C2370.2	NO DEVIATIONS SHALL BE MADE WITHOUT C2370 APPROVAL	TITLE MTRA Disposal Box	DRAWING NO. 2370.2-7407V	REV D	SHEET 4 of 11

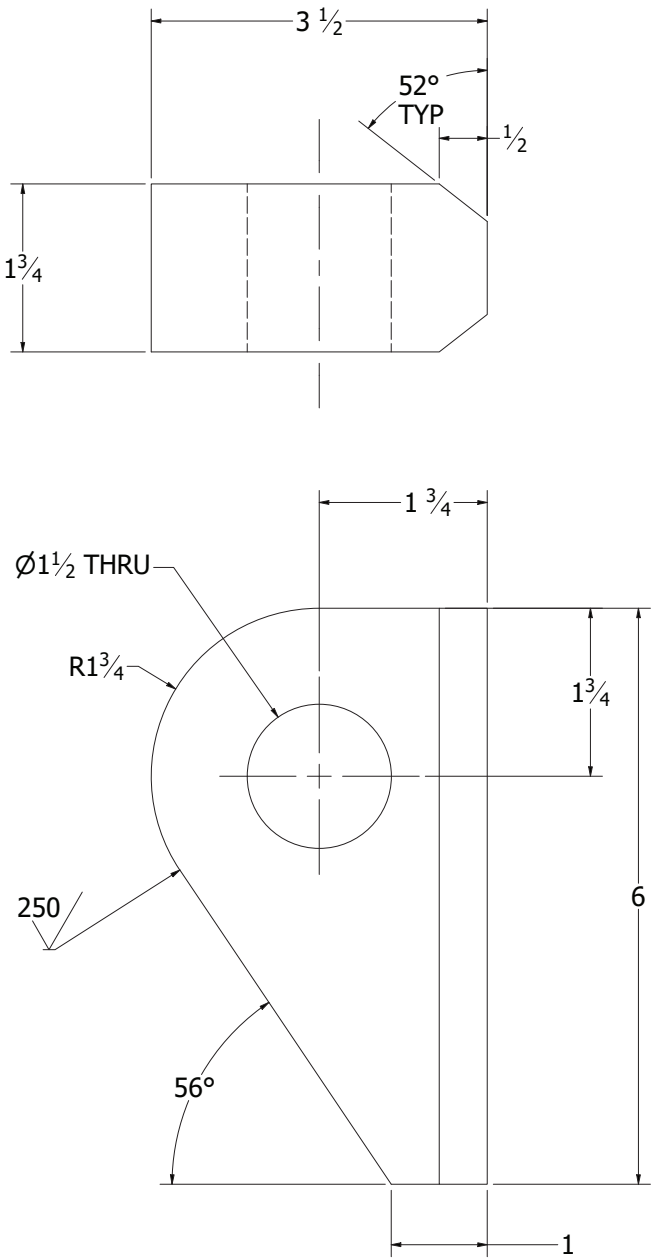

PC 5: Padeye

NORFOLK NAVAL SHIPYARD REACTOR SERVICING C2370.2	NO DEVIATIONS SHALL BE MADE WITHOUT C2370 APPROVAL	TITLE MTRA Disposal Box	DRAWING NO. 2370.2-7407V	REV D	SHEET 5 of 11

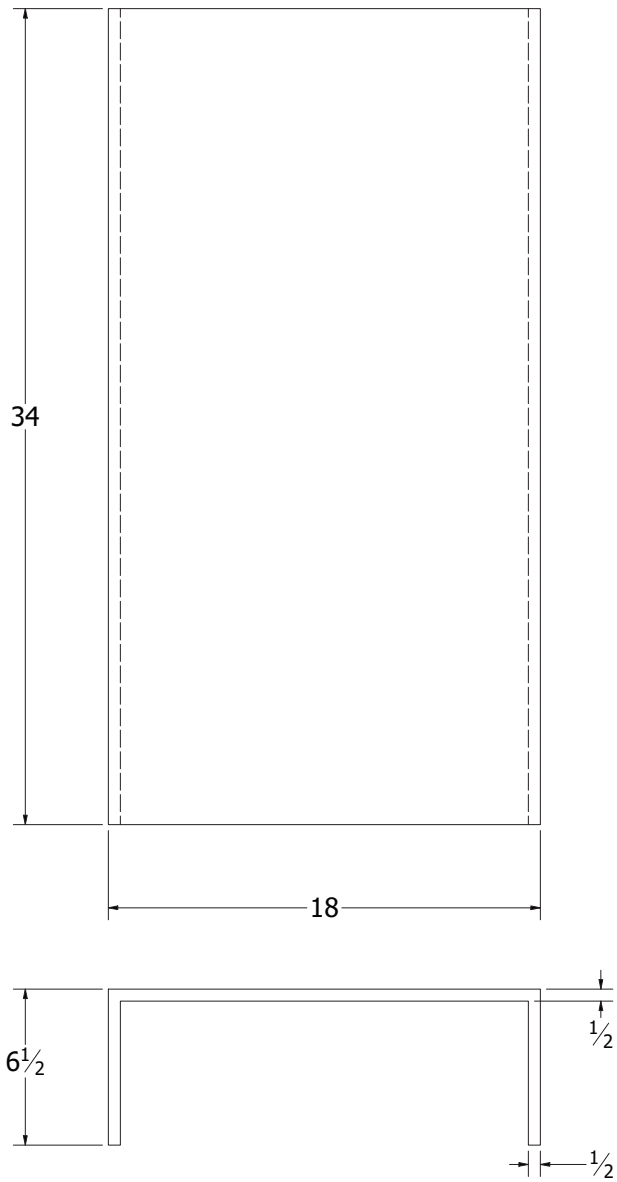

PC 7: Modified Forklift Channel

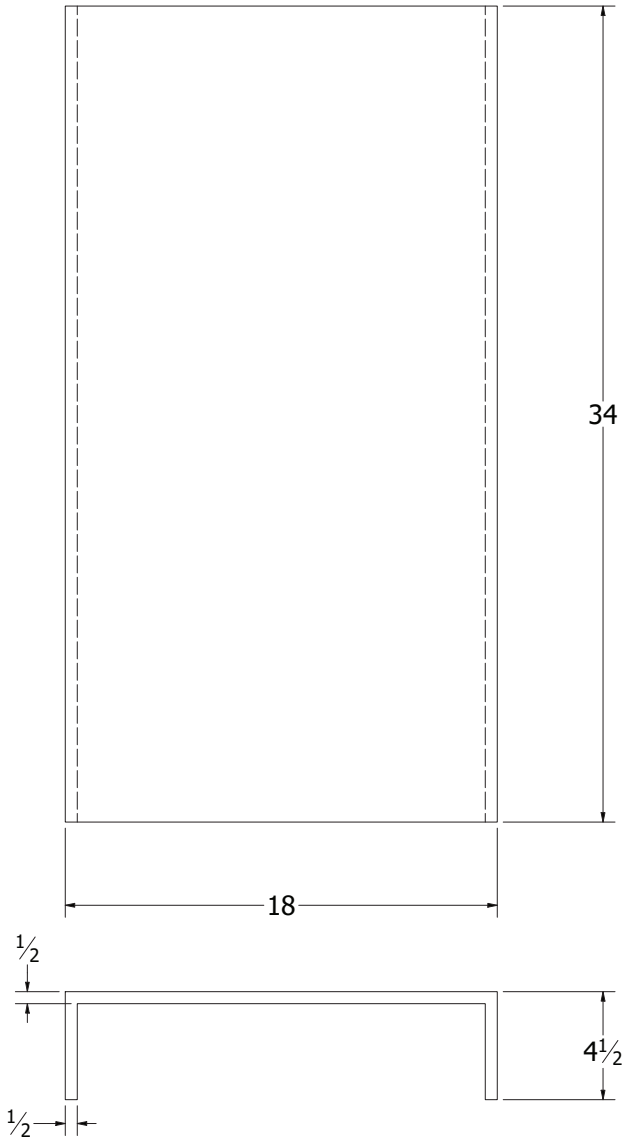

PC 8: Forklift Channel

NOTE: PC 7 AND 8 MAY BE FABRICATED BY BENDING 1/2" PLATE OR WELDING TO FORM THE C CHANNEL.

NORFOLK NAVAL SHIPYARD REACTOR SERVICING C2370.2	NO DEVIATIONS SHALL BE MADE WITHOUT C2370 APPROVAL	TITLE MTRA Disposal Box	DRAWING NO. 2370.2-7407V	REV D	SHEET 6 of 11

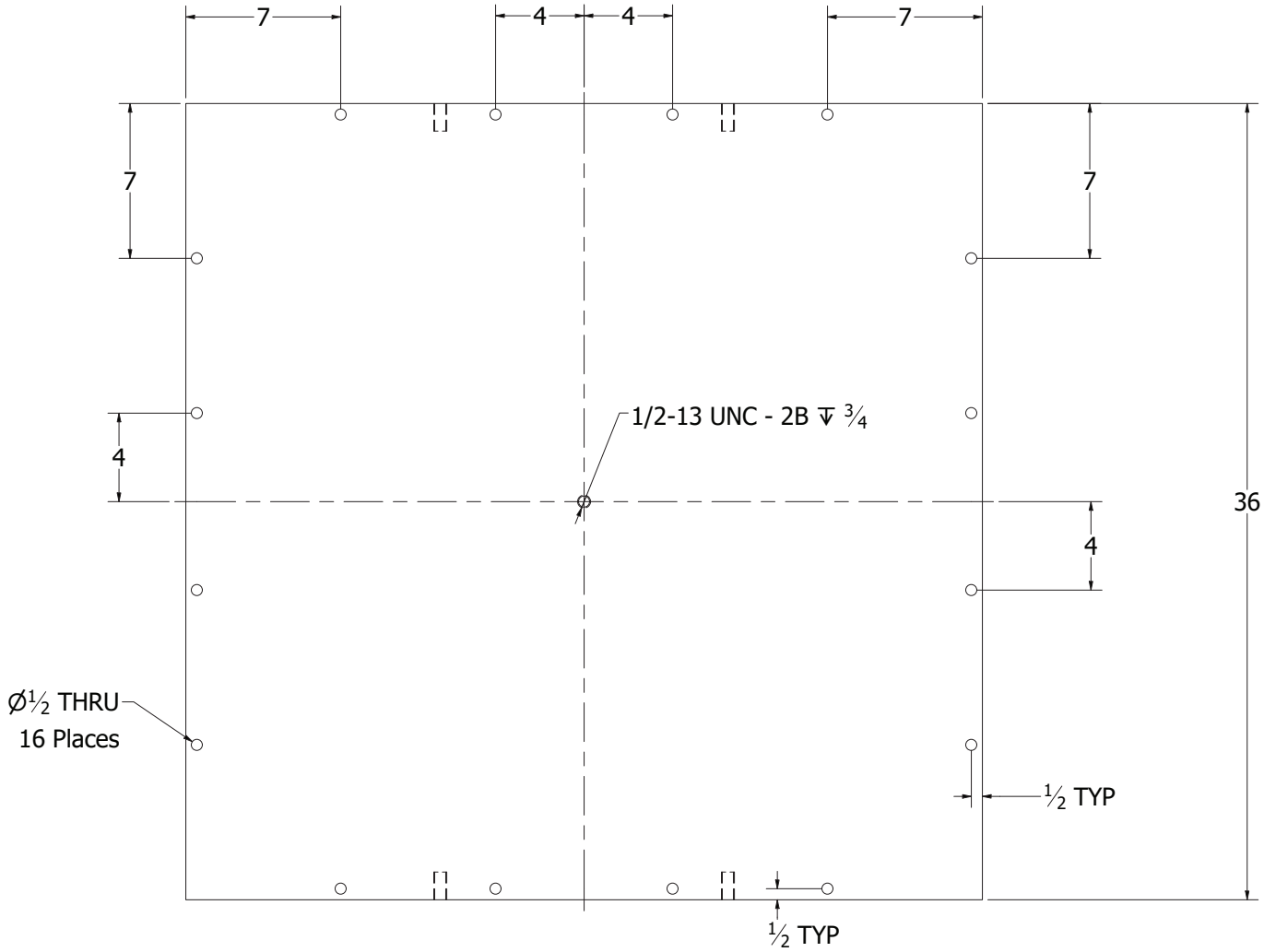

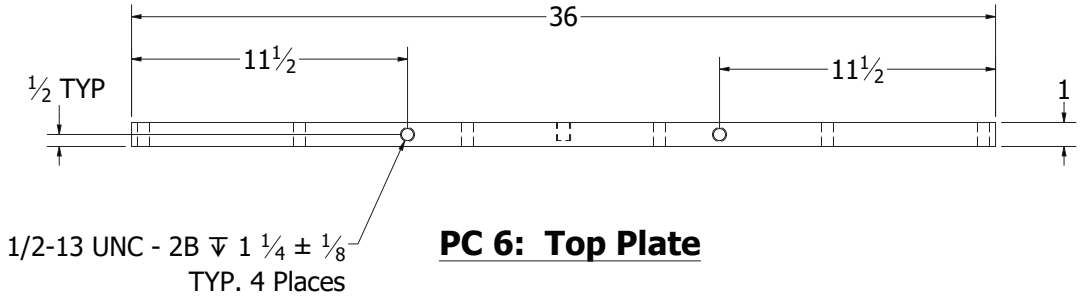

PC 6: Top Plate

NORFOLK NAVAL SHIPYARD REACTOR SERVICING C2370.2	NO DEVIATIONS SHALL BE MADE WITHOUT C2370 APPROVAL	TITLE MTRA Disposal Box	DRAWING NO. 2370.2-7407V	REV D	SHEET 7 of 11

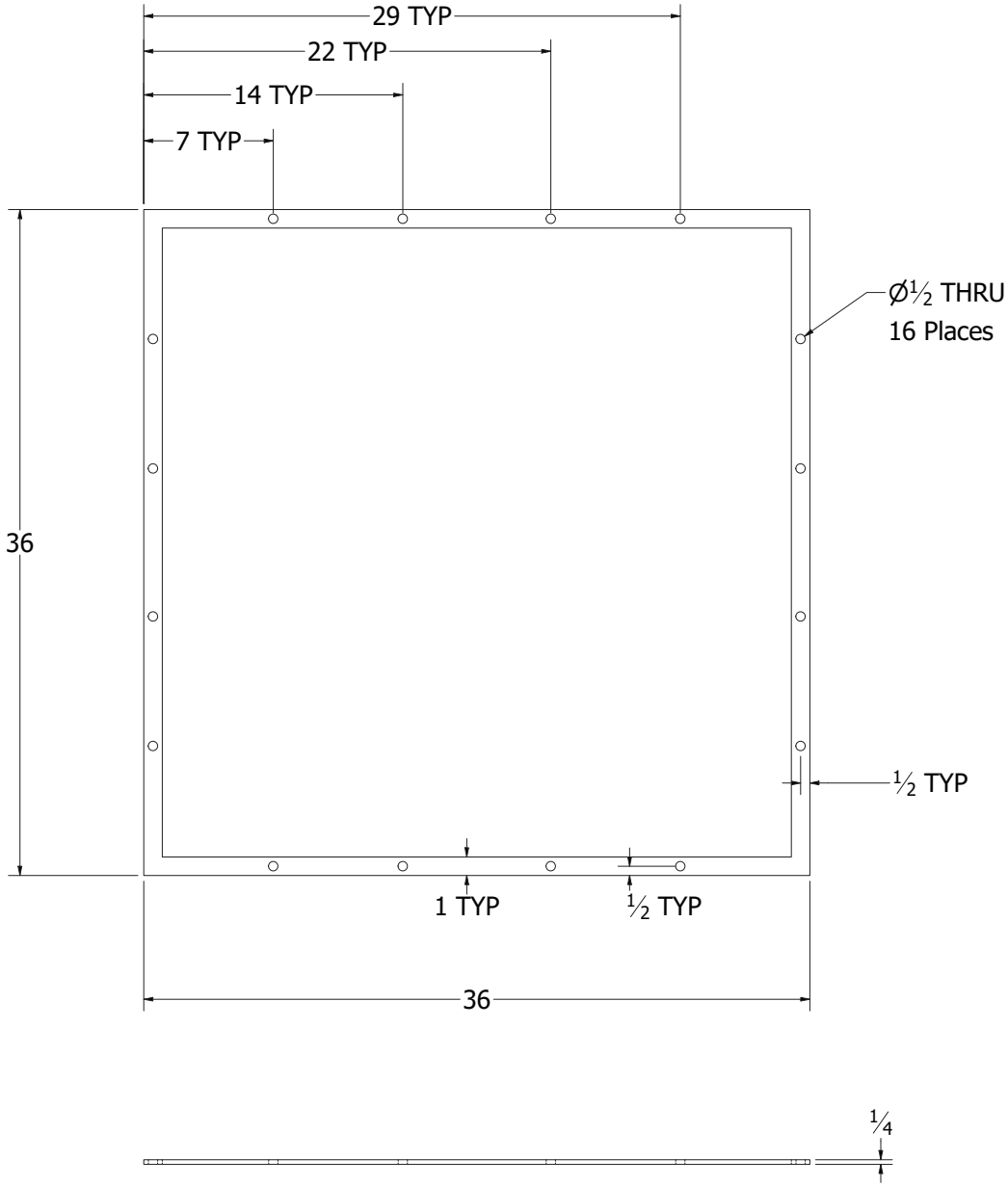

PC 11: Top Cover Gasket

NORFOLK NAVAL SHIPYARD REACTOR SERVICING C2370.2	NO DEVIATIONS SHALL BE MADE WITHOUT C2370 APPROVAL	TITLE MTRA Disposal Box	DRAWING NO. 2370.2-7407V	REV D	SHEET 8 of 11

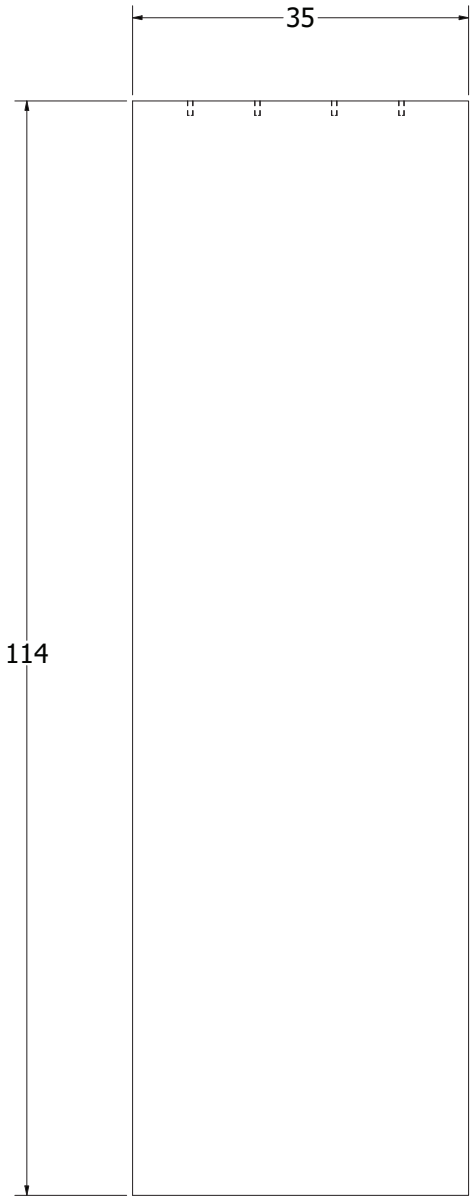

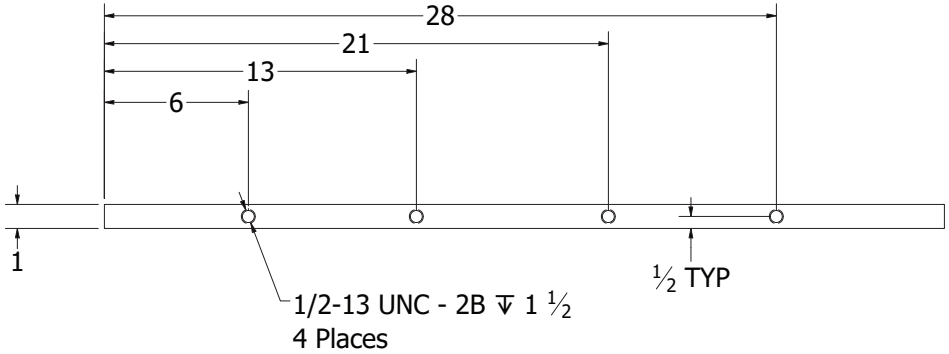

PC 4: Inner Side Plate

NORFOLK NAVAL SHIPYARD REACTOR SERVICING C2370.2	NO DEVIATIONS SHALL BE MADE WITHOUT C2370 APPROVAL	TITLE MTRA Disposal Box	DRAWING NO. 2370.2-7407V	REV D	SHEET 9 of 11

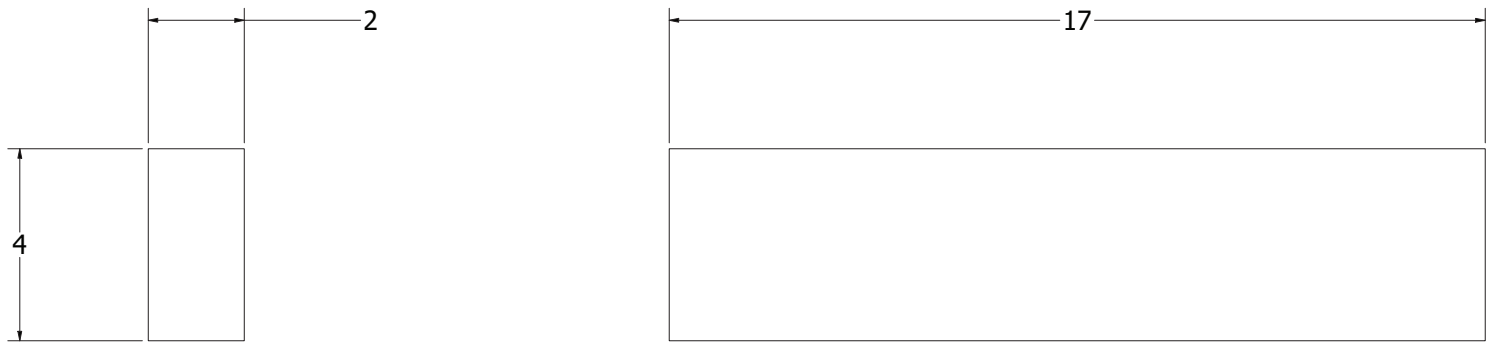

PC 15: Forklift Spacer

NORFOLK NAVAL SHIPYARD REACTOR SERVICING C2370.2	NO DEVIATIONS SHALL BE MADE WITHOUT C2370 APPROVAL	TITLE MTRA Disposal Box	DRAWING NO. 2370.2-7407V	REV OI	SHEET 10 of 11

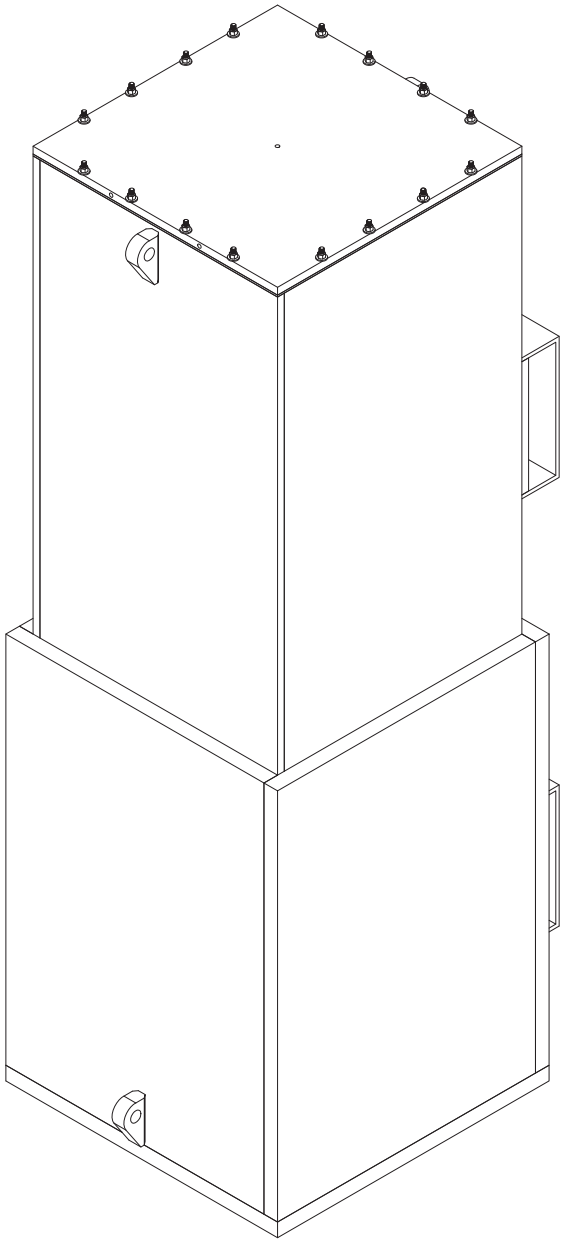

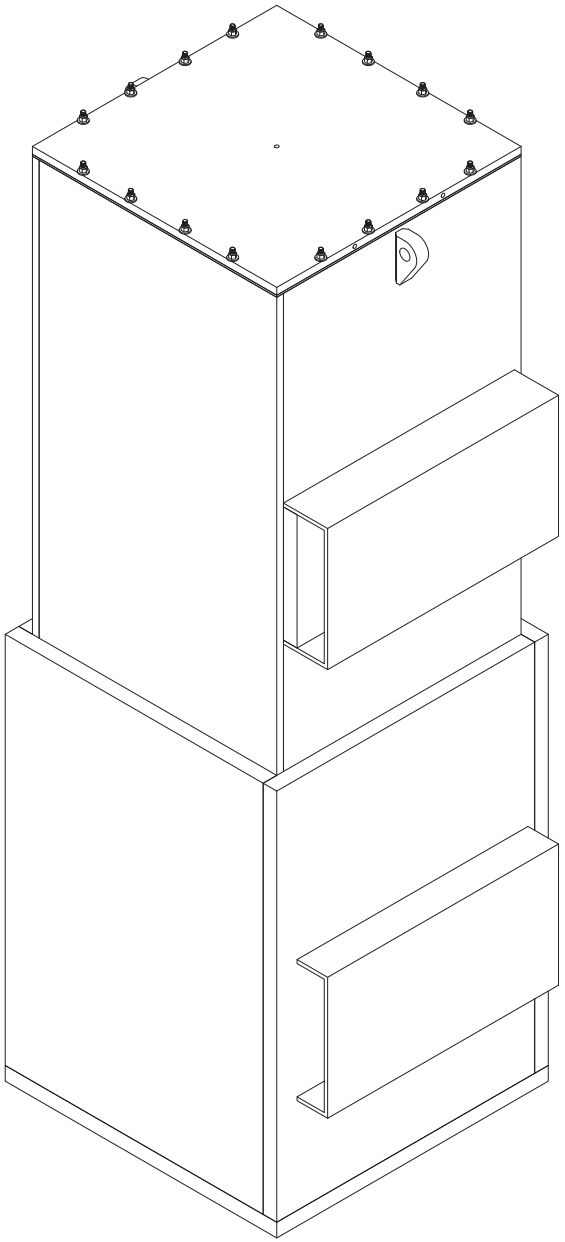

NORFOLK NAVAL SHIPYARD REACTOR SERVICING C2370.2	NO DEVIATIONS SHALL BE MADE WITHOUT C2370 APPROVAL	TITLE MTRA Disposal Box	DRAWING NO. 2370.2-7407V	REV D	SHEET 11 of 11