GRCA PMIS No.: 192082

PROJECT	SHEET NUMBER
AZ NP GRCA 14(2)	A.1

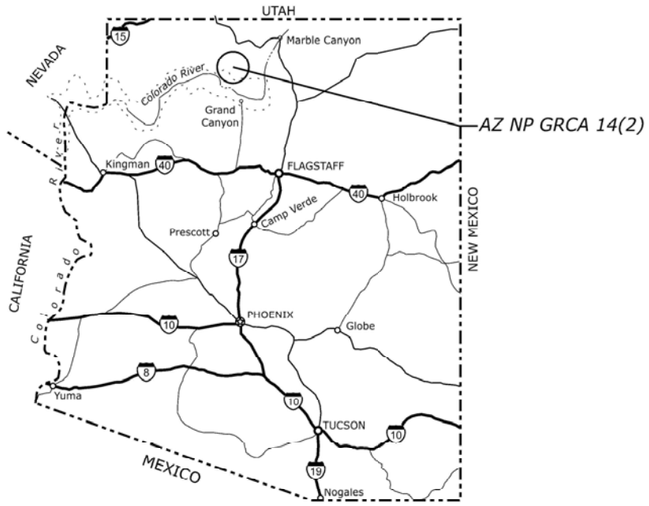

ARIZONA KEY MAP

TYPE OF CONSTRUCTION:

Drainage, Asphalt Paving, Pavement Patching, Guardrail, Permanent Traffic Control

U. S. DEPARTMENT OF THE INTERIOR
NATIONAL PARK SERVICE
GRAND CANYON NATIONAL PARK

PLANS FOR PROPOSED PROJECT

AZ NP GRCA 14(2)

ROADWAY IMPROVEMENTS

COCONINO COUNTY

SCHEDULE A:
12.70 MILES (NORTH ENTRANCE ROAD)
11 REPAIR LOCATIONS (CAPE ROYAL ROAD
15 REPAIR LOCATIONS (POINT IMPERIAL ROAD)

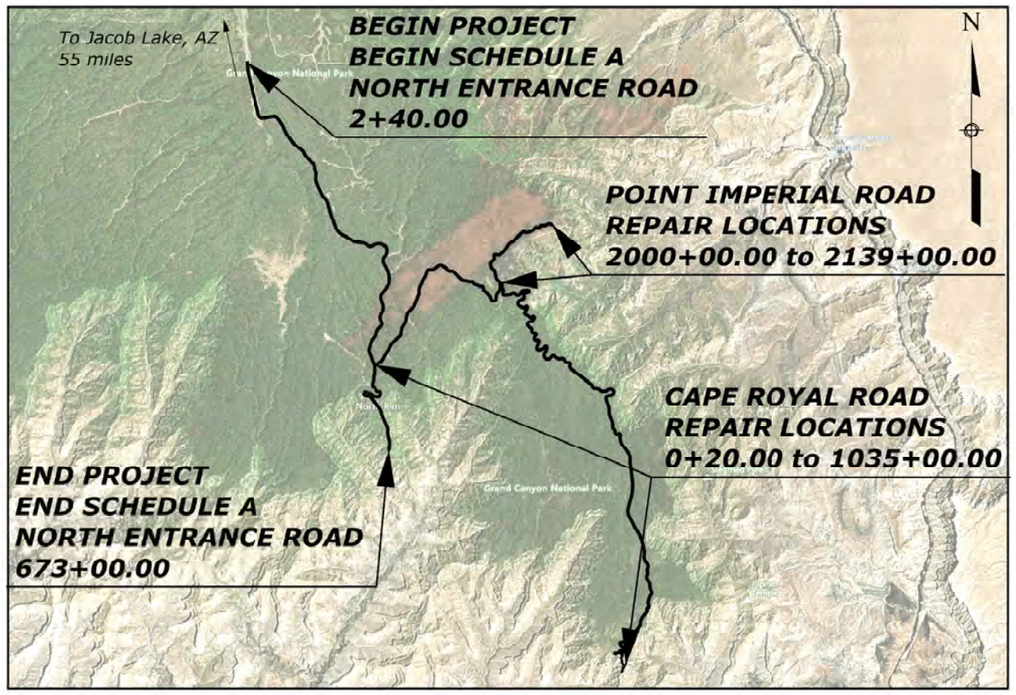

0 4 8
Scale in Miles

SECTION INDEX	
SHEET	**DESCRIPTION**
A.	GENERAL INFORMATION
B.	SUMMARY OF QUANTITIES
C.	TYPICAL SECTIONS
D.	PLAN AND PROFILE SHEETS
E.	APPROACH ROAD PLAN AND PROFILE SHEETS
F.	PARKING LOT PLAN SHEETS
G.	SOIL EROSION AND SEDIMENT CONTROL
H.	GRADING PLANS
I.	RIPRAP AND RETAINING WALL LAYOUTS
J.	PAVEMENT DRAWINGS
K.	BRIDGE
L.	DRAINAGE
M.	WATER AND SANITARY SEWER SYSTEMS
N.	MISCELLANEOUS DETAILS
O.	PERMANENT VEGETATION
P.	TEMPORARY STREAM DIVERSION
Q.	PERMANENT TRAFFIC CONTROL
R.	TEMPORARY TRAFFIC CONTROL
S.	ELECTRICAL SYSTEMS
T.	ROADSIDE DEVELOPMENT
Full Sheet Index on Sheet A.2	

PLANS PREPARED BY
U.S. DEPARTMENT OF TRANSPORTATION
FEDERAL HIGHWAY ADMINISTRATION
CENTRAL FEDERAL LANDS HIGHWAY DIVISION
DENVER, CO

811 Know what's below. Call before you dig. 811beforeyoudig.com

WORLD HERITAGE SITE

PROJECT MANAGER	HIGHWAY DESIGN MANAGER	LEAD DESIGNER
T. EGGERS	E. JESSEE	J. FELLING

APPROVED:

CURTIS R SCOTT — Digitally signed by CURTIS R SCOTT Date: 2026.06.11 16:24:56 -06'00'

Chief of Engineering, Central Federal Lands Highway Division — DATE

/S/ Edward Keable — 5/29/2026

Park Superintendent, Grand Canyon National Park — DATE

c:\pw_work_cfl\dms14316\A_Sheets.dgn [JEF: TEST]
11 June 2026 1:43 PM

© 2026 Microsoft Corporation Earthstar Geographics SIO © Maptox © 2026 TomTom

PROJECT	SHEET NUMBER
AZ NP GRCA 14(2)	A.3

Δ	total central angle
abut.	abutment
ADT	average daily traffic
AH	ahead
AMEND	amendment
appr.	approach
b.f.	both faces
BK	back
BL	baseline
BM	bench mark
BP	balance point
br.	bridge
brg.	bearing
c.c.	center to center
℄ or CL	centerline
CMP	corrugated metal pipe
conn.	connection
constr. jt.	construction joint
cont.	continuous
CS	point of curve to spiral
CUFT	cubic foot (feet)
CUYD	cubic yard(s)
CW	curve widening
D or dia. or Ø	diameter
DHV	design hourly volume
diag.	diagonal
diaph.	diaphragm
E	east
e	superelevation rate
e.f.	each face
El. 94.066	elevation with number
elev.	elevation
emb.	embankment
EOP	edge of pavement
EQ or eq.	equation
ESAL	equivalent single axle load
ETW	edge of travel way
exc.	excavation
exp. jt.	expansion joint
f.f.	fill face
flg.	flange
ftg.	footing
ga.	gage (gauge)
galv.	galvanized
ID	inside diameter
jt.	joint
K	length/algebraic difference
L	length of curve
lat.	latitude
LNFT	linear foot (feet)
long.	longitude
LPSM	lump sum
Ls	length of spiral
Lt or LT	left
max.	maximum
MGAL	thousand gallon
MGS	Midwest Guardrail System
min.	minimum
mon.	monument
MP	mile post
N	north
NC	normal crown
o.c.	on center
o.f.	other face
o.o.	out to out
OD	outside diameter
OHWM	ordinary high water mark
PC	point of curve to tangent
PCC	point of compound curve
PCS	point of curve to spiral
PI	point of intersection
pl.	plate
POB	point of beginning
POC	point on curve
POE	point of ending
POS	point on spiral
POT	point on tangent
PS	point of tangent to spiral
PSC	point of spiral to curve
PST	point of spiral to tangent
PT	point of tangent to curve
pvmt.	pavement
R	radius
R.	range
R/W	right-of-way
reinf.	reinforcement
Rt or RT	right
S	south
SADT	seasonal average daily traffic
SC	point of spiral to curve
sec.	section
shldr	shoulder
spa.	spacing, spaces or spaced
SQFT	square foot
SQYD	square yard
SRS	point of spiral to reverse spiral
SS	point of spiral to spiral (no curve)
SSD	stopping sight distance
ST	point of spiral to tangent
sta.	station
std.	standard
stgr.	stringer
stiff.	stiffener
STS	point of spiral to tangent spiral
T	tangent length
T.	township
TCE	temporary construction easement
TS	point of tangent to spiral
Ts	tangent distance (spiraled curve)
typ.	typical
V	design speed
VC	vertical curve
vert.	vertical
vph	vehicles per hour
VPI	vertical point of intersection
W	west

National Boundary
State Boundary
County Boundary
City Boundary
Township or Range Line
Section Line
Section Corner (Found, Projected)
¼ Section Line
¼ Section Corner (Found, Projected)
1/16 Section Line
1/16 Section Corner (Found, Projected)
Property Line
Parcel Number
Right-of-Way Line (Existing, Proposed)
Permanent Easement (Existing, Proposed)
Temporary Construction Easement
Federal Agency Boundary
Wilderness Boundary
Indian Reservation Boundary
Existing Roadway (Paved, Gravel)
Railroad
Trail
Check Dam
Fiber Roll
Sandbag
Silt Fence
Intermittent Drainage or Small Creek
Large Creek or River
Lake, Pond or Reservoir
Spring
Treeline; Individual Trees
Material Source; Bore Hole; Test Pit
Coordinate Grid Tick
Spot Elevation
Boulder; Well; Antenna; Grave
Control Point (Terrestrial and GPS); Jump Hub
North Arrow
Riprap

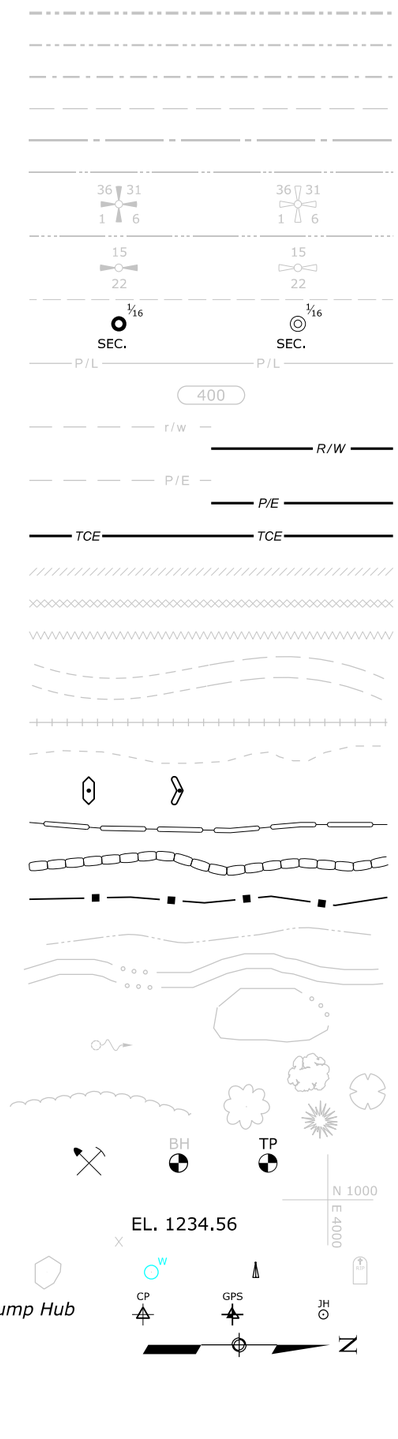

NOTE:

1. Additional symbols may be shown in a legend on the appropriate plan sheet.

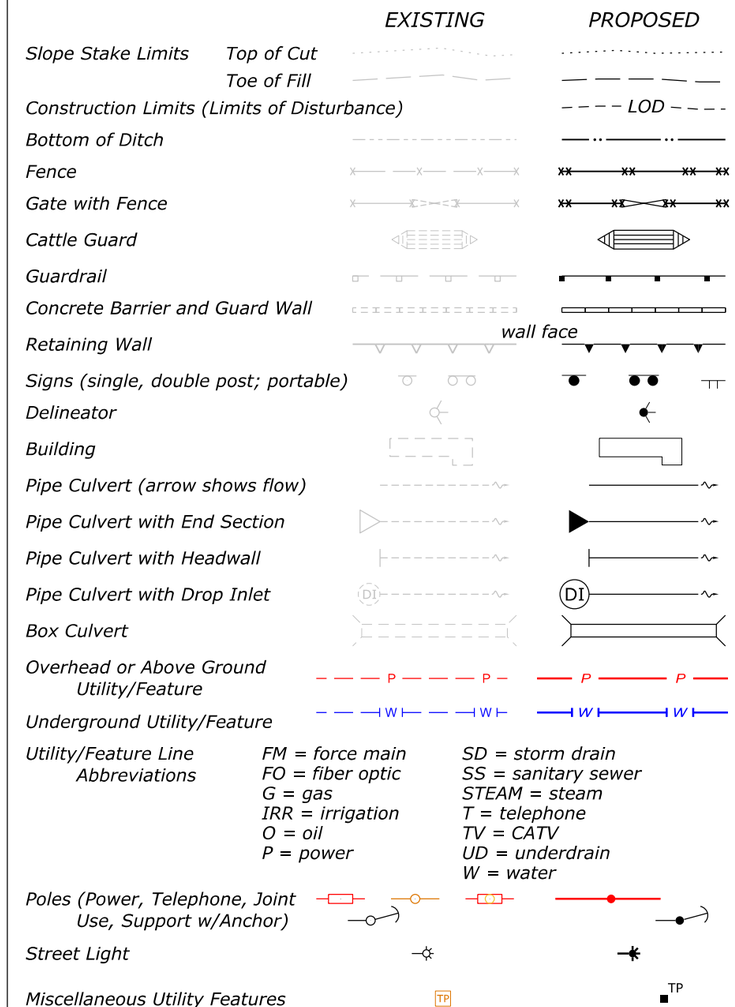

NO SCALE

U.S. DEPARTMENT OF TRANSPORTATION, FHWA
OFFICE OF FEDERAL LANDS HIGHWAY

PLAN SYMBOLS AND ABBREVIATIONS

FLH STANDARD 101-1
SPECIFICATION FP-24
APPROVED FOR USE --/----

c:\pw_work_cfl\dms14316\A3-Std101-1.dgn [Std 101-1]
8 June 2026 12:00 PM

POINT NUMBER	STATE PLANE COORDINATES NORTH	EAST	ELEVATION	GEO COORDINATES LATITUDE	LONGITUDE	ELLIPSOID HEIGHT	MAPPING ANGLE	COMBINED FACTOR	DESCRIPTION
1	1891171.52	659796.04	8222.15	36°11'50.83808"N	112°03'10.55139"W	8147.91	-0°04'48"	0.99951227	101 - Control Point
2	1891578.17	659892.71	8235.80	36°11'54.86105"N	112°03'09.37877"W	8161.66	-0°04'48"	0.99951160	101 - Control Point
3	1942248.86	641029.88	8800.41	36°20'15.64820"N	112°07'00.81525"W	8728.92	-0°07'08"	0.99948663	101 - Control Point
4	1925730.60	650587.60	8806.29	36°17'32.47103"N	112°05'03.63807"W	8734.08	-0°05'56"	0.99948520	101 - Control Point
5	1925329.50	650719.33	8797.13	36°17'28.50660"N	112°05'02.02030"W	8724.90	-0°05'56"	0.99948562	101 - Control Point
6	1914875.76	659648.43	8250.19	36°15'45.26244"N	112°03'12.76089"W	8177.43	-0°04'52"	0.99951087	101 - Control Point
7	1914229.27	659794.01	8231.29	36°15'38.87091"N	112°03'10.97196"W	8158.50	-0°04'52"	0.99951176	101 - Control Point
8	1898575.69	658973.46	8278.27	36°13'04.05138"N	112°03'20.71773"W	8204.67	-0°04'55"	0.99950963	101 - Control Point
9	1898265.82	658638.48	8241.20	36°13'00.98207"N	112°03'24.80056"W	8167.60	-0°04'59"	0.99951143	101 - Control Point
50	1898458.94	658924.64	8260.99	36°13'02.89605"N	112°03'21.31146"W	8187.39	-0°04'55"	0.99951046	101 - Control Point
51	1934202.00	645603.72	8765.33	36°18'56.15918"N	112°06'04.71995"W	8693.52	-0°06'32"	0.99948773	101 - Control Point
52	1934047.21	645687.04	8764.59	36°18'54.62992"N	112°06'03.69814"W	8692.78	-0°06'32"	0.99948776	101 - Control Point
60	1891890.67	659903.01	8241.87	36°11'57.95177"N	112°03'09.25854"W	8167.76	-0°04'48"	0.99951131	101 - Control Point
61	1892184.59	659908.64	8244.98	36°12'00.85863"N	112°03'09.19481"W	8170.88	-0°04'48"	0.99951116	101 - Control Point
100	1942253.64	641034.77	8800.10	36°20'15.69554"N	112°07'00.75564"W	8728.61	-0°07'08"	0.99948665	122 - Found Monument
101	1942253.78	641144.48	8805.78	36°20'15.69922"N	112°06'59.41462"W	8734.29	-0°07'05"	0.99948636	122 - Found Monument
102	1942257.92	641154.34	8805.94	36°20'15.74030"N	112°06'59.29415"W	8734.45	-0°07'05"	0.99948635	122 - Found Monument
500	1941147.08	641262.92	8832.98	36°20'04.75694"N	112°06'57.93901"W	8761.46	-0°07'05"	0.99948505	101 - Control Point
501	1941268.81	641232.08	8831.11	36°20'05.96015"N	112°06'58.31901"W	8759.59	-0°07'05"	0.99948514	101 - Control Point
502	1941370.85	641181.33	8828.67	36°20'06.96828"N	112°06'58.94191"W	8757.16	-0°07'05"	0.99948526	101 - Control Point
503	1941509.74	641165.72	8824.59	36°20'08.34152"N	112°06'59.13626"W	8753.08	-0°07'05"	0.99948546	101 - Control Point
504	1941362.95	641135.71	8828.85	36°20'06.88924"N	112°06'59.49932"W	8757.34	-0°07'05"	0.99948526	101 - Control Point
505	1941226.86	641141.12	8830.57	36°20'05.54345"N	112°06'59.42979"W	8759.05	-0°07'05"	0.99948518	101 - Control Point
506	1941090.57	641181.25	8832.19	36°20'04.19649"N	112°06'58.93575"W	8760.66	-0°07'05"	0.99948510	101 - Control Point
507	1940914.33	641215.68	8831.65	36°20'02.45429"N	112°06'58.51052"W	8760.12	-0°07'05"	0.99948512	101 - Control Point
510	1898338.61	658753.50	8246.23	36°13'01.70366"N	112°03'23.39807"W	8172.62	-0°04'59"	0.99951118	101 - Control Point
511	1898393.72	658814.31	8252.29	36°13'02.24950"N	112°03'22.65681"W	8178.69	-0°04'55"	0.99951089	101 - Control Point
512	1898472.39	658934.73	8262.28	36°13'03.02921"N	112°03'21.18858"W	8188.68	-0°04'55"	0.99951040	101 - Control Point
513	1898544.89	658943.49	8267.25	36°13'03.74641"N	112°03'21.08291"W	8193.66	-0°04'55"	0.99951016	101 - Control Point
514	1898514.48	658888.86	8262.53	36°13'03.44483"N	112°03'21.74911"W	8188.94	-0°04'55"	0.99951039	101 - Control Point
515	1898453.42	658812.95	8255.19	36°13'02.83995"N	112°03'22.67455"W	8181.59	-0°04'59"	0.99951075	101 - Control Point
516	1898413.98	658742.59	8248.33	36°13'02.44885"N	112°03'23.53257"W	8174.73	-0°04'59"	0.99951108	101 - Control Point
517	1898338.13	658666.93	8239.45	36°13'01.69760"N	112°03'24.45461"W	8165.85	-0°04'59"	0.99951152	101 - Control Point
520	1891728.54	659888.62	8238.52	36°11'56.34819"N	112°03'09.43129"W	8164.39	-0°04'48"	0.99951147	101 - Control Point
521	1891604.84	659833.51	8235.86	36°11'55.12401"N	112°03'10.10160"W	8161.72	-0°04'48"	0.99951160	101 - Control Point
522	1891509.29	659838.18	8233.45	36°11'54.17912"N	112°03'10.04297"W	8159.30	-0°04'48"	0.99951172	101 - Control Point
523	1891400.78	659829.97	8229.96	36°11'53.10585"N	112°03'10.14138"W	8155.80	-0°04'48"	0.99951189	101 - Control Point
524	1891289.35	659805.46	8223.64	36°11'52.00354"N	112°03'10.43843"W	8149.48	-0°04'48"	0.99951219	101 - Control Point
525	1891195.16	659763.57	8221.67	36°11'51.07146"N	112°03'10.94802"W	8147.50	-0°04'52"	0.99951229	101 - Control Point
526	1891126.33	659785.30	8222.24	36°11'50.39105"N	112°03'10.68162"W	8148.06	-0°04'48"	0.99951226	101 - Control Point
527	1891251.65	659843.72	8223.42	36°11'51.63127"N	112°03'09.97099"W	8149.25	-0°04'48"	0.99951220	101 - Control Point

PROJECT AVERAGES = 0.99950137

Project : Grand Canyon North Rim

Date Of Field Work : July 20, 2021-July 28, 2021
Date Of Final Adjustment : July 30, 2021

Project Units : International Feet
Datum: NAD83(2011)
Zone: Arizona State Plane Central Zone (0202)
Geoid: 18 CONUS
OPUS Epoch Date : 2010.000
Vertical Datum : NAVD88

Gpk File Dated : N/A
Gpk File Name : N/A Alignment :

NOTE: TO PRECISELY CHECK DISTANCES BETWEEN POINTS AS MEASURED ON THE GROUND :
INVERSE THE STATE PLANE COORDINATES AND DIVIDE THE COMPUTED DISTANCE
BY A MEAN COMBINED FACTOR OF THE TWO POINTS.

TO COMPUTE GEODETIC AZIMUTHS USE THE FOLLOWING FORMULA :
GEODETIC AZIMUTH = GRID AZIMUTH + MAPPING ANGLE

NO.	DESCRIPTION REVISIONS (OR CHANGE NOTICES)	DATE	BY
5			
4			
3			
2			
1	*Created*	*4/29/26*	*JF*

SURVEY CONTROL

c:\pw_work_cfl\dms14316\A4-survey_control.dgn [Survey Control]
8 June 2026 12:01 PM

GRCA PMIS No.: 192082

PROJECT	SHEET NUMBER
AZ NP GRCA 14(2)	A.5

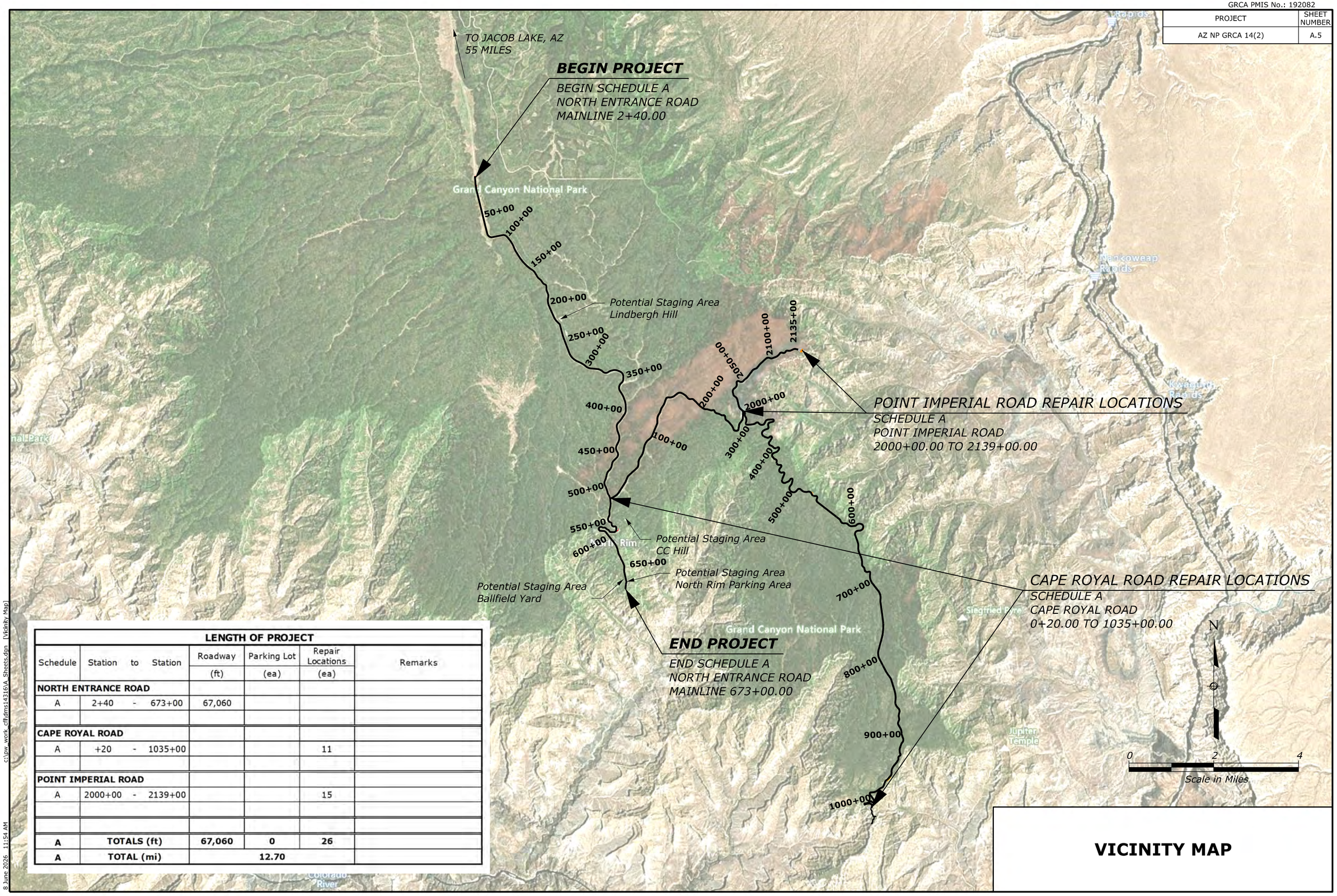

LENGTH OF PROJECT

Schedule	Station to Station	Roadway (ft)	Parking Lot (ea)	Repair Locations (ea)	Remarks
NORTH ENTRANCE ROAD					
A	2+40 - 673+00	67,060			
CAPE ROYAL ROAD					
A	+20 - 1035+00			11	
POINT IMPERIAL ROAD					
A	2000+00 - 2139+00			15	
A	**TOTALS (ft)**	**67,060**	**0**	**26**	
A	**TOTAL (mi)**	**12.70**			

VICINITY MAP

c:\pw_work-cft\dms14316\A_Sheets.dgn [Vicinity Map]

8 June 2026 11:54 AM

© 2026 Microsoft Corporation Earthstar Geographics SIO © 2026 TomTom

SUMMARY OF QUANTITIES - Schedule A

PROJECT	SHEET NUMBER
AZ NP GRCA 14(2)	B.1

AMEND	Line Item No.	Pay Item Number	Pay Item Description	Unit	Sheet and Description								Estimated Quantities	Remarks and/or Determination of Estimated Quantity
					B.2	B.3-B.4	B.5-B.8							
					Drainage Summary	Surfacing Summary	Permanent Traffic Control Summary					Allowance	Bid Schedule	
	A0020	ITEM 1	MOBILIZATION	LPSM									ALL	
	A0040	ITEM 2	REMOVAL OF STRUCTURES AND OBSTRUCTIONS	LPSM									ALL	
	A0060	ITEM 3	DITCH, EXCAVATION	LNFT	400							50	450	
	A0080	ITEM 4	REVET MATTRESS, GALVANIZED OR ALUMINIZED COATED	SQYD	24							6	30	
	A0100	ITEM 5	ASPHALT CONCRETE PAVEMENT	TON		1,357						43	1,400	
	A0120	ITEM 6	TACK COAT	TON		5.6						0.4	6.0	
	A0140	ITEM 7	ASPHALT CONCRETE PAVEMENT PATCH, TYPE 1	SQYD		1,209						91	1,300	
	A0160	ITEM 8	ASPHALT CONCRETE PAVEMENT PATCH, TYPE 2	SQYD		1,501						124	1,625	
	A0180	ITEM 9	ASPHALT CONCRETE PAVEMENT PATCH, TYPE 3	SQYD		362						63	425	
	A0200	ITEM 10	36-INCH PIPE CULVERT	LNFT	40							10	50	
	A0220	ITEM 11	END SECTION FOR 36-INCH PIPE CULVERT	EACH	2								2	
	A0240	ITEM 12	GUARDRAIL SYSTEM MGS, TYPE 4, CLASS B, STEEL POSTS	LNFT	3,525							100	3,625	
	A0260	ITEM 13	TERMINAL SYSTEM, TYPE MGS TANGENT	EACH	7								7	
	A0280	ITEM 14	TERMINAL SYSTEM, TYPE MGS-BAT	EACH	1								1	
	A0300	ITEM 15	GATE (ROAD CLOSURE GATE)	EACH	1								1	
	A0320	ITEM 16	SIGN SYSTEM	EACH			26					4	30	
	A0340	ITEM 17	OBJECT MARKER, TYPE 2	EACH	88							12	100	
	A0360	ITEM 18	DELINEATOR, TYPE SNOW POLE	EACH			1,203					47	1,250	
	A0380	ITEM 19	PAVEMENT MARKINGS (TYPE B)	MILE			100.7					4.3	105.0	
	A0400	ITEM 20	TEMPORARY TRAFFIC CONTROL	LPSM									ALL	

10-Jun-2026 10:55 AM N:\AZ\grca14(2)\ProjectManagers\11 Advertisement\11.2 EE (Schedules, Options, Amounts)\[AZ NP GRCA 14(2) Engineers Estimate.xlsx]Sheet

DRAINAGE SUMMARY

Schedule /Option	Station	Skew	Side	Allowable Pipe Material	ITEM 3 DITCH, EXCAVATION (LNFT)	ITEM 4 REVET MATTRESS, GALVANIZED OR ALUMINIZED (SQYD)	ITEM 10 36-INCH PIPE CULVERT (LNFT)	ITEM 11 END SECTION FOR 36-INCH PIPE CULVERT (EACH)	ITEM 17 OBJECT MARKER, TYPE 2 (EACH)	Remarks
NORTH ENTRANCE ROAD										
A	4+34								2	Existing culvert
A	28+13								2	Existing culvert
A	37+28		RT						2	Existing culvert
A	40+76								2	Existing culvert
A	55+40								2	Existing culvert
A	59+40								2	Existing culvert
A	64+40								2	Existing culvert
A	71+36								2	Existing culvert
A	81+65								2	Existing culvert
A	93+75								2	Existing culvert
A	98+50								2	Existing culvert
A	106+31								2	Existing culvert
A	116+28								2	Existing culvert
A	120+96								2	Existing culvert
A	124+52								2	Existing culvert
A	131+51								2	Existing culvert
A	138+46								2	Existing culvert
A	140+65								2	Existing culvert
A	160+25								2	Existing culvert
A	179+46								2	Existing culvert
A	193+65								2	Existing culvert
A	235+27								2	Existing culvert
A	293+12								2	Existing culvert
A	355+05								2	Existing culvert
A	360+30								2	Existing culvert
A	383+00 to 386+00		Lt		300					Grade ditch to existing culvert
A	386+13								2	Existing culvert
A	389+12								2	Existing culvert
A	397+11								2	Existing culvert
A	400+54								2	Existing culvert
A	404+60								2	Existing culvert
A	411+90								2	Existing culvert
A	435+63								2	Existing culvert
A	443+60								2	Existing culvert
A	446+40								2	Existing culvert
A	451+40								2	Existing culvert
A	465+87								2	Existing culvert
A	467+09								2	Existing culvert
A	486+20								2	Existing culvert
A	492+36								2	Existing culvert
A	531+75		Rt						2	Existing culvert
A	535+60								2	Existing culvert
A	551+40								2	Existing culvert
A	560+00								2	Existing culvert
NORTH ENTRANCE ROAD TOTALS					**300**	**0**	**0**	**0**	**86**	
CAPE ROYAL ROAD										
A	264+50	°		CM	100	24	40	2	2	New Culvert
CAPE ROYAL ROAD TOTALS					**100**	**24**	**40**	**2**	**2**	
POINT IMPERIAL ROAD										
A										No drainage items
POINT IMPERIAL ROAD TOTALS					**0**	**0**	**0**	**0**	**0**	
SCHEDULE A TOTALS					**400**	**24**	**40**	**2**	**88**	

GUARDRAIL SUMMARY

Schedule /Option	Station to Station	Side	BLOCK SIZE (INCH)	F.I.O. REMOVAL OF GUARDRAIL (LNFT)	ITEM 12 GUARDRAIL SYSTEM MGS, TYPE 4, CLASS B, STEEL POSTS (LNFT)	ITEM 13 TERMINAL SYSTEM, TYPE MGS TANGENT (EACH)	ITEM 14 TERMINAL SYSTEM, TYPE MGS-BAT (EACH)	Remarks
NORTH ENTRANCE ROAD								
A	72+65 to 82+25	RT	8		862.5	2		
A	177+10 to 181+85	RT	8	475.0	375.0	2		
A	541+80 to 548+60	RT	8	500.0	587.5	2		
A	569+00 to 587+00	RT	8	1,160.0	1,700.0	1	1	
NORTH ENTRANCE ROAD TOTALS				**2,135**	**3,525.0**	**7**	**1**	
CAPE ROYAL ROAD								
A	237+50 to 241+00	RT		350.0				Removal of burnt posts
A	254+00 to 261+50	RT		750.0				Removal of burnt posts
A	261+50 to 265+25	RT		375.0				Removal of existing rail
CAPE ROYAL ROAD TOTALS				**1,475.0**	**0.0**	**0**	**0**	
POINT IMPERIAL ROAD								
A								No barrier on this route
POINT IMPERIAL ROAD TOTALS				**0.0**	**0.0**	**0**	**0**	
SCHEDULE A TOTALS				**3,610.0**	**3,525.0**	**7**	**1**	

FENCES AND GATES SUMMARY

Schedule /Option	Station to Station	Side	ITEM 15 GATE (ROADWAY CLOSURE GATE) (EACH)	Remarks
NORTH ENTRANCE ROAD				
A	222+50	Rt	1	Snow Route Closure Gate
NORTH ENTRANCE ROAD TOTALS			**1**	
CAPE ROYAL ROAD				
A				No gates on this road
CAPE ROYAL ROAD TOTALS			**0**	
POINT IMPERIAL ROAD				
A				No gates on this road
POINT IMPERIAL ROAD TOTALS			**0**	
SCHEDULE A TOTALS			**1**	

DRAINAGE SUMMARY

Sheet 1 of 1

c:\pw_work_cflhdms\14318\B_Sheets.dgn [Drainage Summary]
10 June 2026 10:44 AM

SURFACING SUMMARY

						Item Number	ITEM 5	ITEM 6	ITEM 7	ITEM 8	ITEM 9	
Schedule /Option	Station to Station		Side	Repair Dimensions (ft)			ASPHALT CONCRETE PAVEMENT	TACK COAT	ASPHALT CONCRETE PAVEMENT PATCH, TYPE 1	ASPHALT CONCRETE PAVEMENT PATCH, TYPE 2	ASPHALT CONCRETE PAVEMENT PATCH, TYPE 3	Remarks
				L	W	D	TON	TON	SQYD	SQYD	SQYD	
NORTH ENTRANCE ROAD												
A	10+60	to 17+00	Lt/Rt	640	varies	0.167	340	1.5				Overlay section
A	21+00	to 21+50	Rt	50	6				33			
A	60+00	to 60+40	Rt	40	12				53			
A	60+85	to 61+00	Lt	15	14				23			
A	73+00	to 82+50	Lt/Rt	950	28	0.167	322	1.3				Overlay section
A	94+50	to 104+00	Lt/Rt	950	28	0.167	322	1.3				Overlay section
A	109+00	to 120+00	Lt/Rt	1,100	28	0.167	373	1.5				Overlay section
A	149+80	to 149+86	Rt	6	14					9		
A	168+00	to 168+50	CL	50	5					28		
A	171+60	to 172+30	Rt	70	14						54	Approx. 50% of the area
A	181+20	to 181+70	Rt	50	14					78		
A	181+80	to 181+90	CL	10	5						3	Approx. 50% of the area
A	196+80	to 197+30	Lt	50	10						28	Approx. 50% of the area
A	204+70	to 206+55	Rt	185	7					144		
A	206+75	to 206+90	Lt	15	12					20		
A	206+55	to 207+10	Rt	55	14						28	Approx. 33% of the area
A	208+20	to 208+50	Lt	30	14					47		
A	208+70	to 208+92	Lt	22	8					20		
A	216+80	to 216+95	Lt	15	14						8	Approx. 33% of the area
A	217+80	to 218+40	Lt	60	6					40		
A	218+75	to 219+25	Lt	50	14					78		
A	222+00	to 225+10	CL	310	4						52	Approx. 33% of the area
A	231+00	to 231+40	CL	40	5						7	Approx. 33% of the area
A	234+00	to 234+60	CL	60	5						10	Approx. 33% of the area
A	244+00	to 244+30	Rt	30	14				47			
A	251+00	to 253+15	Rt	215	14						33	Approx. 10% of the area
A	256+00	to 257+00	Rt	100	1.5						17	
A	413+50	to 414+00	CL	50	6						8	Approx. 25% of the area
A	414+25	to 414+50	Rt	25	14						4	Approx. 10% of the area
A	436+60	to 437+60	Rt	100	14						16	Approx. 10% of the area
A	438+00	to 438+30	Rt	30	14						5	Approx. 10% of the area
A	438+50	to 438+70	Rt	20	14						3	Approx. 10% of the area
A	447+00	to 447+60	Rt	60	14				93			Structural failure, Type 1 required
A	455+20	to 456+60	Rt	140	14				218			Structural failure, Type 1 required.
A	466+40	to 466+80	CL	40	5						6	Approx. 25% of the area
A	469+00	to 470+50	Lt	150	2						3	
A	473+00	to 474+00	CL	100	2						11	Approx. 50% of the area
A	517+60	to 517+80	Lt	20	2						1	
A	528+50	to 532+00	CL	350	4						51	Approx. 33% of the area
A	552+40	to 552+80	Lt	40	14				62			Structural failure, Type 1 required
A	561+50	to 562+50	Lt	100	2						2	
A	564+20	to 565+60	Lt/Rt	140	28				436			Structural failure, Type 1 full width required
A	609+45	to 610+20	Lt	75	16					133		
A	617+60	to 621+00	CL	340	1						6	
A	639+40	to 639+80	CL	40	4						6	
NORTH ENTRANCE ROAD TOTALS (SHEET 1)							**1,357**	**5.6**	**965**	**597**	**362**	

SURFACING SUMMARY NOTE:

1. *Repair dimensions shown for Pavement Patch, Type 3 are the general station range and nominal dimensions. Patch areas within these dimensions may vary.The patch quantity is within the area shown, but not the entire area requires patching. See Special 418-A for more information on measuring patching.*

Unit Weights for Estimating Purposes

Aggregate base . . . 139 lb/ft3
Hot asphalt concrete pavement 145.2 lb/ft3
Fog seal . . . . 0.1 gal/yd2 (233 gal/ton)
Prime coat . . . . 233 gal/ton (2000 lb/ton)
Tack coat . . . . 0.1 gal/yd2 (233 gal/ton)

SURFACING SUMMARY
Sheet 1 of 2

10 June 2026 10:44 AM c:\pw_work_cfl\dms14318\B_Sheets.dgn [Surfacing Summary-SHEET 1]

SURFACING SUMMARY

						ITEM 5	ITEM 6	ITEM 7	ITEM 8	ITEM 9	
			Item Number								
Schedule /Option	Station to Station	Side	Repair Dimensions (ft)			ASPHALT CONCRETE PAVEMENT	TACK COAT	ASPHALT CONCRETE PAVEMENT PATCH, TYPE 1	ASPHALT CONCRETE PAVEMENT PATCH, TYPE 2	ASPHALT CONCRETE PAVEMENT PATCH, TYPE 3	Remarks
			L	W	D	TON	TON	SQYD	SQYD	SQYD	
Cape Royal Road											
A	202+30 to 202+40	Lt/Rt	10.00	22					24		Fire burn damage
A	206+90 to 207+00	Lt/Rt	10.00	22					24		Fire burn damage
A	211+90 to 212+10	Rt	20.00	22					49		Fire burn damage
A	264+50 to 265+50	Lt/Rt	100.00	22				244			Culvert installation
A	268+30 to 268+40	Lt	10.00	22					24		Fire burn damage
A	280+10 to 280+20	Rt	10.00	22					24		Fire burn damage
CAPE ROYAL ROAD TOTALS						**0**	**0.0**	**244**	**145**	**0**	
Point Imperial Road											
A	2017+00 to 2017+30	Lt/Rt	30	22					73		Fire burn damage
A	2019+00 to 2019+20	Lt/Rt	20	22					49		Fire burn damage
A	2035+00 to 2035+25	Lt	25	22					61		Fire burn damage
A	2037+50 to 2037+75	Lt/Rt	25	22					61		Fire burn damage
A	2039+25 to 2039+50	Lt	25	12					33		Fire burn damage
A	2052+75 to 2052+90	Lt	15	12					20		Fire burn damage
A	2070+00 to 2070+20	Lt	20	12					27		Fire burn damage
A	2074+50 to 2074+75	Lt/Rt	25	22					61		Fire burn damage
A	2075+50 to 2075+75	Rt	25	12					33		Fire burn damage
A	2095+20 to 2095+40	Lt/Rt	20	22					49		Fire burn damage
A	2097+00 to 2097+20	Lt	20	11					24		Fire burn damage
A	2100+20 to 2100+40	Lt	20	11					24		Fire burn damage
A	2101+50 to 2102+00	Lt/Rt	50	22					122		Fire burn damage
A	2102+20 to 2102+40	Rt	20	11					24		Fire burn damage
A	2138+40 to 2138+80	Rt	40	22					98		Fire burn damage
POINT IMPERIAL ROAD TOTALS						**0**	**0.0**	**0**	**759**	**0**	
SUBTOTALS THIS SHEET (SHEET 2)						**0**	**0.0**	**244**	**904**	**0**	
SUBTOTALS SHEET 1						**1,357**	**5.6**	**965**	**597**	**362**	
SUBTOTALS SHEET 2						**0**	**0.0**	**244**	**904**	**0**	
SCHEDULE A TOTALS						**1,357**	**5.6**	**1,209**	**1,501**	**362**	

SURFACING SUMMARY NOTE:

1. *Repair dimensions shown for Pavement Patch, Type 3 are the general station range and nominal dimensions. Patch areas within these dimensions may vary.The patch quantity is within the area shown, but not the entire area requires patching. See Special 418-A for more information on measuring patching.*

Unit Weights for Estimating Purposes

Aggregate base . . . 139 lb/ft3
Hot asphalt concrete pavement 145.2 lb/ft3
Fog seal . . . . 0.1 gal/yd2 (233 gal/ton)
Prime coat . . . . 233 gal/ton (2000 lb/ton)
Tack coat . . . . 0.1 gal/yd2 (233 gal/ton)

SURFACING SUMMARY
Sheet 2 of 2

PERMANENT SIGNING SUMMARY

Schedule /Option	Item Number Station	Side	MUTCD Reference	Description	Sign Panel in x in	F.I.O. REMOVAL OF SIGN EACH	ITEM 16 SIGN SYSTEM EACH	Remarks
NORTH ENTRANCE ROAD								
A	563+50	Rt	W11-2	Pedestrian	36 x 36	1	1	Remove existing at 563+86
A	563+86	Rt	W11-2	Pedestrian	36 x 36		1	
			W16-7PL	Left Diagonal Downward Arrow (plaque)	21 x 15			
A	564+14	Lt	W11-2	Pedestrian	36 x 36		1	
			W16-7PL	Left Diagonal Downward Arrow (plaque)	21 x 15			
A	567+00	Lt	W11-2	Pedestrian	36 x 36		1	
A	603+00	Rt	W11-2	Pedestrian	36 x 36		1	
A	605+69	Rt	W11-2	Pedestrian	36 x 36	1	1	
			W16-7PL	Left Diagonal Downward Arrow (plaque)	21 x 15			
A	605+98	Lt	W11-2	Pedestrian	36 x 36	1	1	
			W16-7PL	Left Diagonal Downward Arrow (plaque)	21 x 15			
A	608+50	Lt	W11-2	Pedestrian	36 x 36		1	
A	661+87	Rt	W11-2	Pedestrian	36 x 36		1	
A	663+02	Rt	W11-2	Pedestrian	36 x 36	1	1	
			W16-7PL	Left Diagonal Downward Arrow (plaque)	21 x 15			
A	663+33	Lt	W11-2	Pedestrian	36 x 36	1	1	
			W16-7PL	Left Diagonal Downward Arrow (plaque)	21 x 15			
A	665+65	Rt	W11-2	Pedestrian	36 x 36	1	1	
			W16-7PL	Left Diagonal Downward Arrow (plaque)	21 x 15			
A	665+96	Lt	W11-2	Pedestrian	36 x 36	1	1	
			W16-7PL	Left Diagonal Downward Arrow (plaque)	21 x 15			
A	667+11	Lt	W11-2	Pedestrian	36 x 36		1	
NORTH ENTRANCE ROAD TOTALS						**7**	**14**	
CAPE ROYAL ROAD								
A	339+00	Rt	W11-2	Pedestrian	36 x 36	1	1	
A	341+50	Rt	W11-2	Pedestrian	36 x 36	1	1	
			W16-7PL	Left Diagonal Downward Arrow (plaque)	21 x 15			
A	341+50	Lt	W11-2	Pedestrian	36 x 36	1	1	
			W16-7PL	Left Diagonal Downward Arrow (plaque)	21 x 15			
A	344+00	Lt	W11-2	Pedestrian	36 x 36	1	1	
A	957+97	Rt	W11-2	Pedestrian	36 x 36	1	1	
A	960+50	Rt	W11-2	Pedestrian	36 x 36	1	1	
			W16-7PL	Left Diagonal Downward Arrow (plaque)	21 x 15			
A	960+50	Lt	W11-2	Pedestrian	36 x 36	1	1	
			W16-7PL	Left Diagonal Downward Arrow (plaque)	21 x 15			
A	962+50	Lt	W11-2	Pedestrian	36 x 36		1	
	1005+00	Rt	W11-2	Pedestrian	36 x 36	1	1	
A	1007+00	Rt	W11-2	Pedestrian	36 x 36	1	1	
			W16-7PL	Left Diagonal Downward Arrow (plaque)	21 x 15			
A	1007+00	Lt	W11-2	Pedestrian	36 x 36	1	1	
			W16-7PL	Left Diagonal Downward Arrow (plaque)	21 x 15			
A	1009+50	Lt	W11-2	Pedestrian	36 x 36	1	1	
CAPE ROYAL ROAD TOTALS						**11**	**12**	
POINT IMPERIAL ROAD								
A								No signs on this route
POINT IMPERIAL ROAD TOTALS						**0**	**0**	
SCHEDULE A TOTALS						**18**	**26**	

PERMANENT TRAFFIC CONTROL SUMMARIES

Sheet 1 of 4

c:\pw_work_cflidms14318\B_Sheets.dgn (Permanent Traffic Control Summaries-Sheet 1)
10 June 2026 10:44 AM

DELINEATOR, SNOW POLE SUMMARY

Schedule/ Option	Station to Station			Side	Item Number ITEM 18 DELINEATOR, TYPE SNOW POLE, 8 FEET EACH	Remarks
NORTH ENTRANCE ROAD						
A	2+45	to	25+00	LT	11	
				RT	10	
A	25+00	to	53+00	LT	14	
				RT	14	
A	53+00	to	81+00	LT	21	
				RT	22	
A	81+00	to	109+00	LT	24	
				RT	23	
A	109+00	to	137+00	LT	15	
				RT	15	
A	137+00	to	165+00	LT	17	
				RT	17	
A	165+00	to	193+00	LT	33	
				RT	33	
A	193+00	to	221+00	LT	15	
				RT	15	
A	221+00	to	249+00	LT	21	
				RT	21	
A	249+00	to	277+00	LT	16	
				RT	16	
A	277+00	to	305+00	LT	21	
				RT	22	
A	305+00	to	333+00	LT	29	
				RT	29	
A	333+00	to	362+00	LT	32	
				RT	30	
SUBTOTALS THIS SHEET (SHEET 1)					**536**	

DELINEATOR, SNOW POLE SUMMARY

Schedule/ Option	Station to Station			Side	Item Number ITEM 18 DELINEATOR, TYPE SNOW POLE, 8 FEET EACH	Remarks
NORTH ENTRANCE ROAD						
A	362+00	to	390+00	LT	23	
				RT	24	
A	390+00	to	418+00	LT	21	
				RT	21	
A	418+00	to	447+00	LT	25	
				RT	25	
A	447+00	to	475+00	LT	29	
				RT	30	
A	475+00	to	503+00	LT	27	
				RT	26	
A	503+00	to	532+00	LT	20	
				RT	20	
A	532+00	to	560+00	LT	49	
				RT	48	
A	560+00	to	575+00	LT	28	
				RT	27	
A	575+00	to	588+00	LT	28	
				RT	29	
A	588+00	to	600+00	LT	23	
				RT	24	
A	600+00	to	629+00	LT	20	
				RT	20	
A	629+00	to	658+00	LT	26	
				RT	26	
A	658+00	to	673+00	LT	14	
				RT	14	
SUBTOTAL THIS SHEET (SHEET 2)					667	
SUBTOTAL SHEET 1					536	
SUBTOTAL SHEET 2					667	
SCHEDULE A TOTAL					**1,203**	

PERMANENT TRAFFIC CONTROL SUMMARIES

Sheet 2 of 4

PERMANENT PAVEMENT MARKINGS SUMMARY

Schedule/ Option	Station to Station	LEFT: Edge Solid White 6 inches	LEFT: Centerline Solid Yellow 4 inches	LEFT: Centerline Broken Yellow 4 inches	CENTERLINE: Centerline Broken Yellow 4 inches	RIGHT: Centerline Broken Yellow 4 inches	RIGHT: Centerline Solid Yellow 4 inches	RIGHT: Edge Solid White 6 inches	MISC. Crosswalk Solid White 12 inches	F.I.O. PAVEMENT MARKINGS, TYPE B, SOLID	F.I.O PAVEMENT MARKINGS, TYPE B, BROKEN	ITEM 19 PAVEMENT MARKINGS (TYPE B)	Remarks
		Item Number											
		LNFT	LNFT	LNFT	LNFT	LNFT	LNFT	LNFT	LNFT	MILE	MILE	MILE	
North Entrance Road													
A	2+40 to 18+75	1,635	1,635				1,635	1,635		1.24	0.00	1.24	
A	18+75 to 58+00	3,925			3,925			3,925		1.49	0.74	2.23	
A	58+00 to 86+00	2,800	2,800				2,800	2,800		2.12	0.00	2.12	
A	86+00 to 96+00	1,000		1,000			1,000	1,000		0.57	0.19	0.76	
A	96+00 to 213+00	11,700	11,700				11,700	11,700		8.86	0.00	8.86	
A	213+00 to 221+00	800		800			800	800		0.45	0.15	0.61	
A	221+00 to 254+00	3,300	3,300				3,300	3,300		2.50	0.00	2.50	
A	254+00 to 265+00	1,100			1,100			1,100		0.42	0.21	0.63	
A	265+00 to 272+00	700		700			700	700		0.40	0.13	0.53	
A	272+00 to 375+00	10,300	10,300				10,300	10,300		7.80	0.00	7.80	
A	375+00 to 380+00	500	500			500		500		0.28	0.09	0.38	
A	380+00 to 397+00	1,700			1,700			1,700		0.64	0.32	0.97	
A	397+00 to 407+00	1,000		1,000			1,000	1,000		0.57	0.19	0.76	
A	407+00 to 432+00	2,500	2,500				2,500	2,500		1.89	0.00	1.89	
A	432+00 to 445+00	1,300		1,300			1,300	1,300		0.74	0.25	0.98	
A	445+00 to 498+00	5,300	5,300				5,300	5,300		4.02	0.00	4.02	
A	498+00 to 504+00	600	600			600		600		0.34	0.11	0.45	
A	504+00 to 509+00	500		500			500	500		0.28	0.09	0.38	
A	509+00 to 673+00	16,400	16,400				16,400	16,400		12.42	0.00	12.42	
A	564+00								84	0.02	0.00	0.02	
A	605+85								78	0.01	0.00	0.01	
A	663+20								78	0.01	0.00	0.01	
A	665+80								78	0.01	0.00	0.01	
NORTH ENTRANCE ROAD SUBTOTALS		**67,060**	**55,035**	**5,300**	**6,725**	**1,100**	**59,235**	**67,060**	**318**	**47.10**	**2.49**	**49.59**	
SUBTOTALS SHEET 1 (THIS SHEET)												**49.59**	

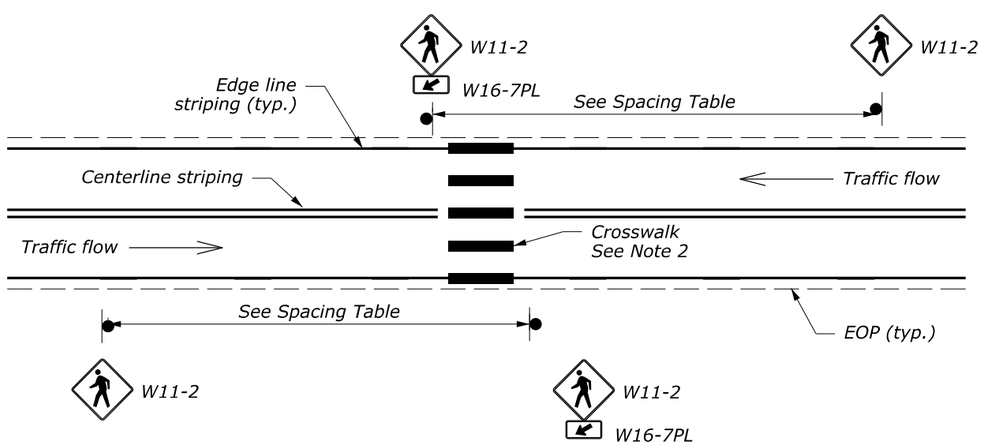

TYPICAL CROSSWALK LAYOUT

CROSSWALK NOTES:

1. Install striping and signing in accordance with the "Manual on Uniform Traffic Control Devices" (MUTCD), latest edition.
2. For longitudinal bar, space line bars to avoid wheel path as shown in the plans or as approved.

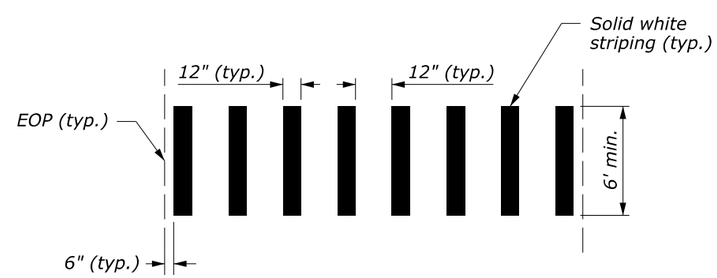

LONGITUDINAL BAR

CROSSWALK STRIPING DIMENSIONS

SIGN SPACING TABLE		
Crossing Location	Posted Speed Limit	Advanced Sign Placement Distance
	MPH	FT
North Entrance Road		
564+00	35	250
605+85	35	250
663+20	15	115
665+80	15	115
Cape Royal Road		
341+35	35	250
960+95	35	250
1007+15	35	250

PERMANENT TRAFFIC CONTROL SUMMARIES

Sheet 3 of 4

10 June 2026 10:44 AM c:\pw_work\cflldms14318\B_Sheets.dgn [Permanent Traffic Control Summaries Sheet 3]

PERMANENT PAVEMENT MARKINGS SUMMARY

Schedule/ Option	Station to Station	LEFT: Edge Solid White 6 inches	LEFT: Centerline Solid Yellow 4 inches	LEFT: Centerline Broken Yellow 4 inches	CENTERLINE: Centerline Broken Yellow 4 inches	RIGHT: Centerline Broken Yellow 4 inches	RIGHT: Centerline Solid Yellow 4 inches	RIGHT: Edge Solid White 6 inches	MISC. Crosswalk Solid White 12 inches	F.I.O. PAVEMENT MARKINGS TYPE B SOLID	F.I.O PAVEMENT MARKINGS, TYPE B, BROKEN	ITEM 19 PAVEMENT MARKINGS (TYPE B)	Remarks
									Item Number				
		LNFT	LNFT	LNFT	LNFT	LNFT	LNFT	LNFT	LNFT	MILE	MILE	MILE	
CAPE ROYAL ROAD													
A	202+20 to 202+50	30	30				30	30		0.02	0.00	0.02	
A	206+80 to 207+10	30	30				30	30		0.02	0.00	0.02	
A	211+80 to 212+20	40	40				40	40		0.03	0.00	0.03	
A	264+40 to 265+60	120	120				120	120		0.09	0.00	0.09	
A	268+20 to 268+50	30	30				30	30		0.02	0.00	0.02	
A	280+00 to 280+30	30	30				30	30		0.02	0.00	0.02	
A	341+35								42	0.01	0.00	0.01	
A	960+95								42	0.01	0.00	0.01	
A	1007+15								42	0.01	0.00	0.01	
CAPE ROYAL ROAD SUBTOTALS		**280**	**280**				**280**	**280**	**126**	**0.24**	**0.00**	**0.24**	
POINT IMPERIAL ROAD													
A	2016+90 to 2017+40	50	50				50	50		0.04	0.00	0.04	
A	2018+90 to 2019+30	40	40				40	40		0.03	0.00	0.03	
A	2034+90 to 2035+35	45	45				45	45		0.03	0.00	0.03	
A	2037+40 to 2037+85	45	45				45	45		0.03	0.00	0.03	
A	2039+15 to 2039+60	45	45				45	45		0.03	0.00	0.03	
A	2052+65 to 2053+00	35	35				35	35		0.03	0.00	0.03	
A	2069+90 to 2070+30	40	40				40	40		0.03	0.00	0.03	
A	2074+40 to 2074+85	45	45				45	45		0.03	0.00	0.03	
A	2075+40 to 2075+85	45	45				45	45		0.03	0.00	0.03	
A	2095+10 to 2095+50	40	40				40	40		0.03	0.00	0.03	
A	2096+90 to 2097+30	40	40				40	40		0.03	0.00	0.03	
A	2100+10 to 2100+50	40	40				40	40		0.03	0.00	0.03	
A	2101+40 to 2102+10	70	70				70	70		0.05	0.00	0.05	
A	2102+10 to 2102+50	40	40				40	40		0.03	0.00	0.03	
A	2138+30 to 2138+90	60	60				60	60		0.05	0.00	0.05	
POINT IMPERIAL ROAD SUBTOTALS		**680**	**680**				**680**	**680**		**0.52**	**0.00**	**0.52**	
SUBTOTALS SHEET 2 (THIS SHEET)										**0.75**	**0.00**	**0.75**	
SUBTOTALS SHEET 1												**49.59**	
SUBTOTALS SHEET 2												**0.75**	
FIRST APPLICATION												**50.34**	
SECOND APPLICATION												**50.34**	
SCHEDULE A TOTALS												**100.68**	

NOTES:

1. *See sheet 3 for cross walk striping details.*

PERMANENT TRAFFIC CONTROL SUMMARIES

Sheet 4 of 4

10 June 2026 10:44 AM c:\pw_work_cfhdms\14318\B_Sheets.dgn [Permanent Traffic Control Summaries Sheet 4]

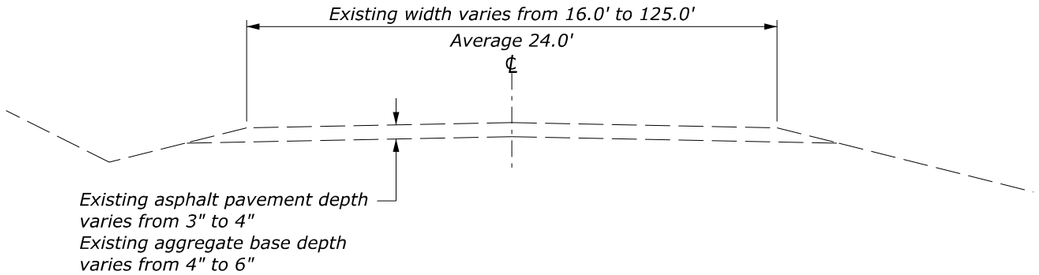

EXISTING TYPICAL SECTION
NORTH ENTRANCE ROAD
Sta. 2+40 to 673+00

Note:

1. The gradient and width of the roadway ditches and the excavation and embankment slope ratios may be adjusted to ensure adequate drainage and stability.
2. Round all earth slopes and all rippable rock slopes. For cut heights less than B, reduce the B and F dimensions to the actual cut height. B = 3', F=3'.
3. Existing superelevated and widened sections are not shown.
4. Apply Tack coat to existing asphalt surface prior to placing asphalt concrete pavement overlay.
5. See surfacing summary and plan sheets for pavement patching locations.
6. Construct aggregate shouldering for overlay and patch sections at a 1:4 or flatter, but no steeper than 1:2 to stay on existing bench.

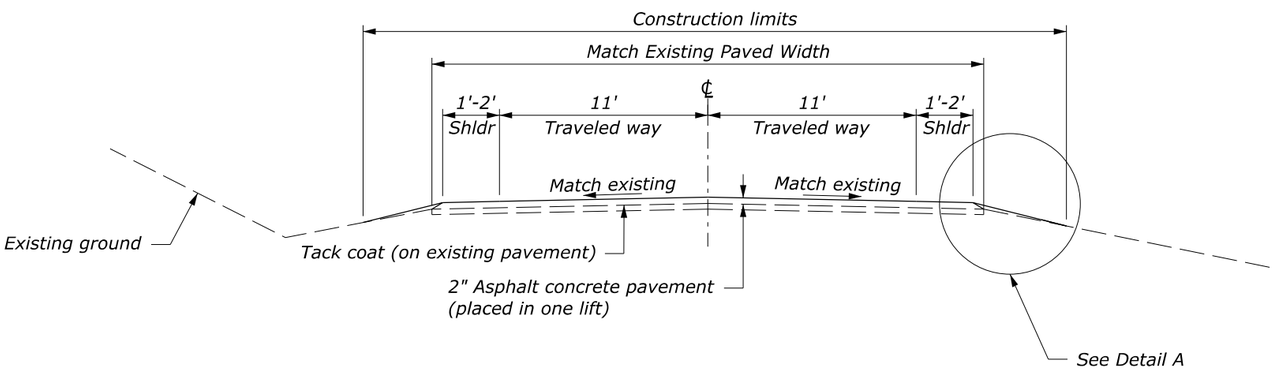

TYPICAL SECTION - OVERLAY
10+60 to 17+00, 73+00 to 82+50,
94+50 to 104+00, 109+00 to 120+00

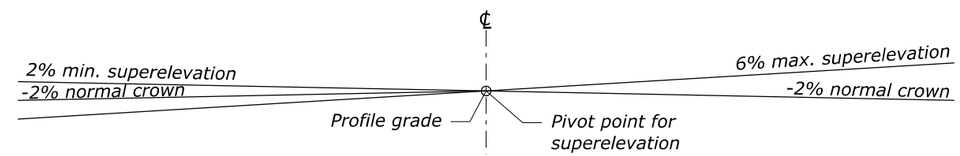

METHOD OF SUPERELEVATION ON CURVES
See plans for locations of curves

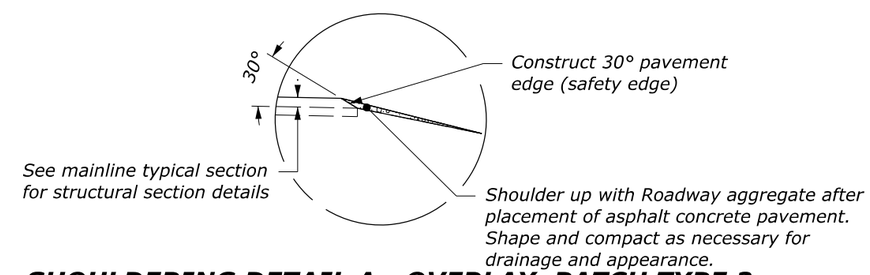

SHOULDERING DETAIL A - OVERLAY, PATCH TYPE 2
(applies to both sides of roadway)

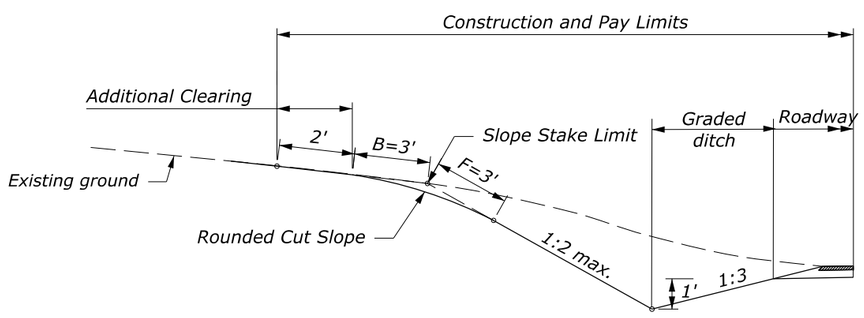

DITCH GRADING DETAIL
(applies to cutslope side of the roadway)
See plan sheets and tabulation of quantities for locations

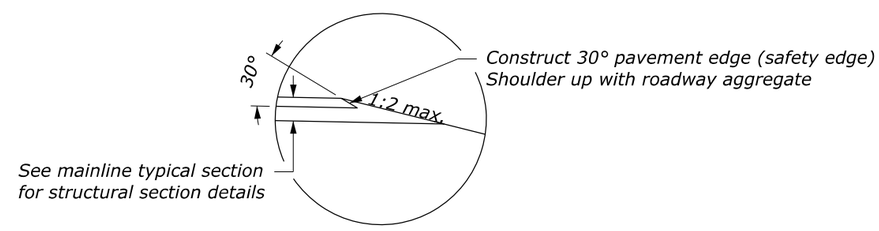

SHOULDERING DETAIL B - PATCH TYPE 1
(applies to both sides of roadway)

NO SCALE

TYPICAL SECTION
NORTH ENTRANCE ROAD
Sheet 1 of 1

c:\pw_work_cfl\dms14321\C_Sheets.dgn [Typical Section]
8 June 2026 12:27 PM

GRCA PMIS NO.: 192082

STATE	PROJECT	SHEET NUMBER
AZ	NP GRCA 14(2)	D.1

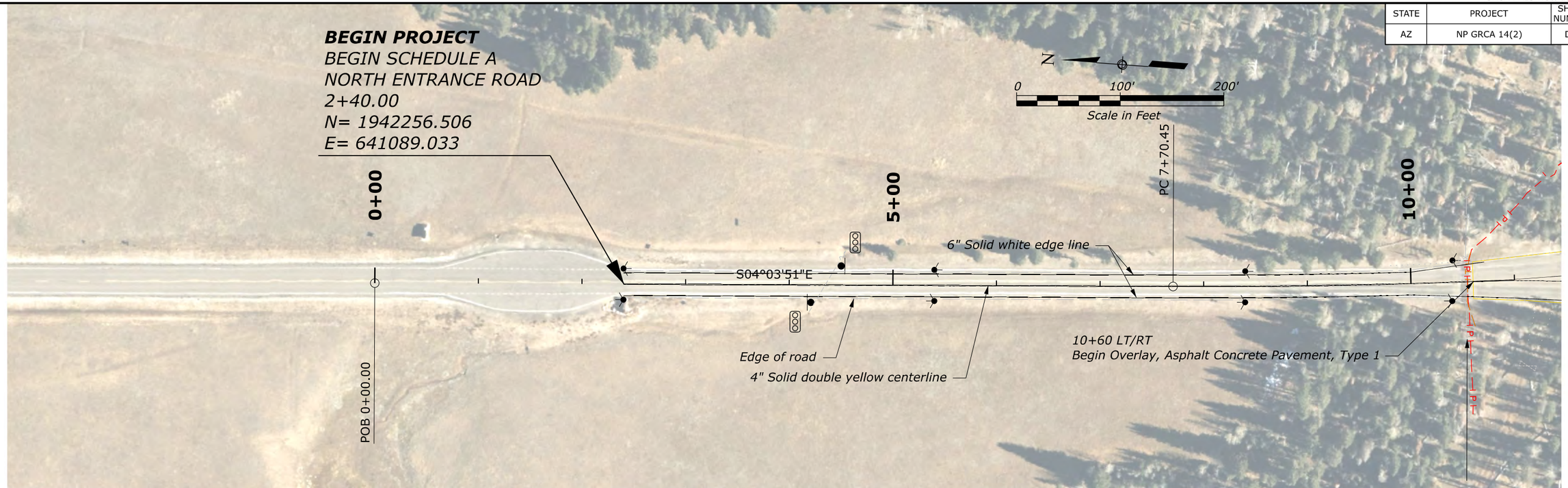

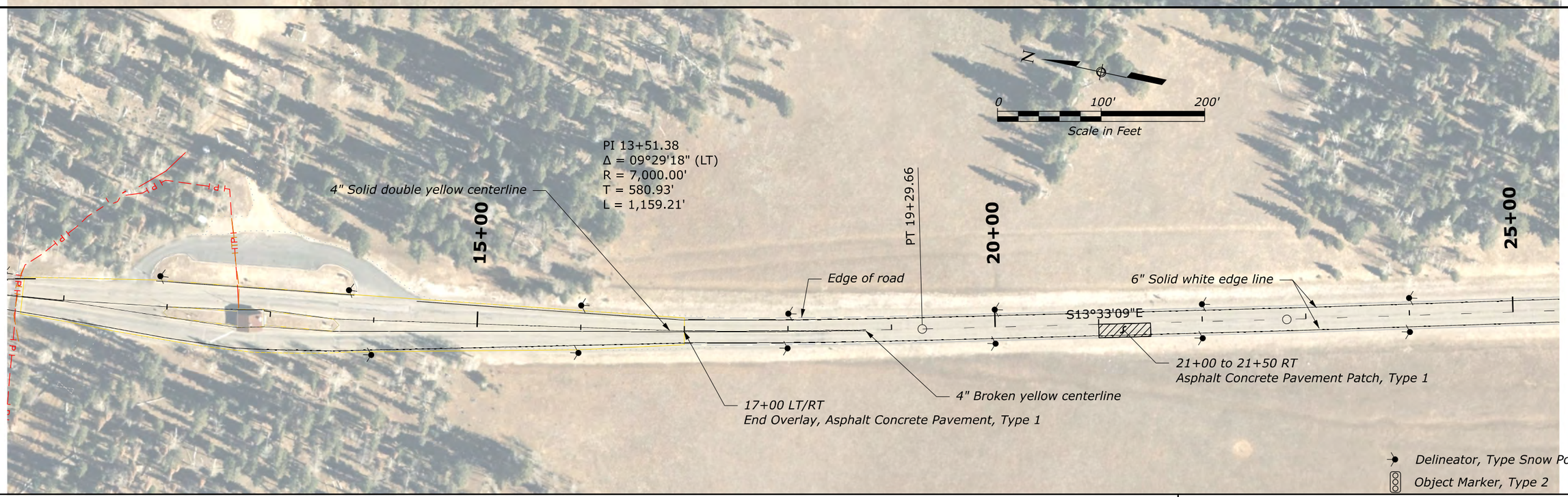

NOTE:

1. The horizontal alignment and the location of the existing and proposed features are not based on precise survey data. Adjust as necessary to fit field conditions.
2. Some features in the drawing are not drawn to scale and identify the approximate location of the feature. Final quantities will be determined from field measurements.
3. Construct asphalt concrete pavement patch type as shown in the quantity table or as identified by the CO. See Special 418-A for more information.
4. Match the existing striping unless otherwise noted. See the Tabulation of Quantities for more information.
5. Install Object Markers and Delineator, Type Snow Poles as shown in the plans and according to Special 633-A.

NORTH ENTRANCE ROAD
2+45 to 25+00

c:\pw_work_cflvdms14320\PLN(GRCA)FTNP.dgn [NORTH ENTRANCE ROAD 1]

8 June 2026 4:01 PM

© 2026 Microsoft Corporation © 2026 Maxar ©CNES (2026) Distribution Airbus DS © Maptox

GRCA PMIS NO.: 192082

STATE	PROJECT	SHEET NUMBER
AZ	NP GRCA 14(2)	D.2

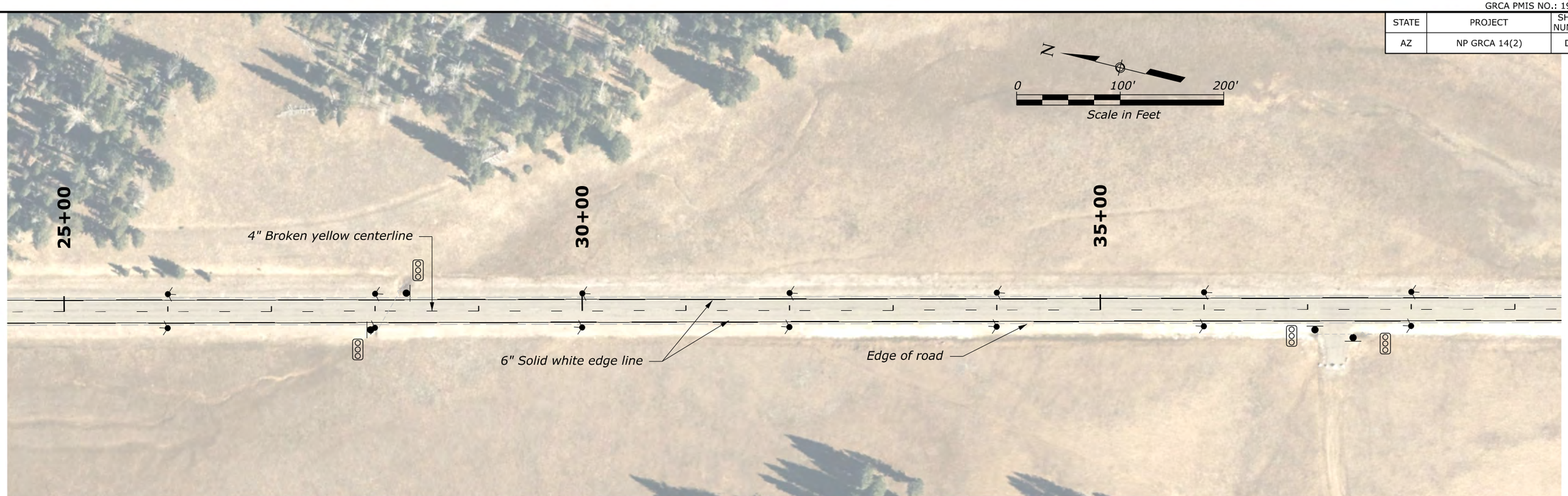

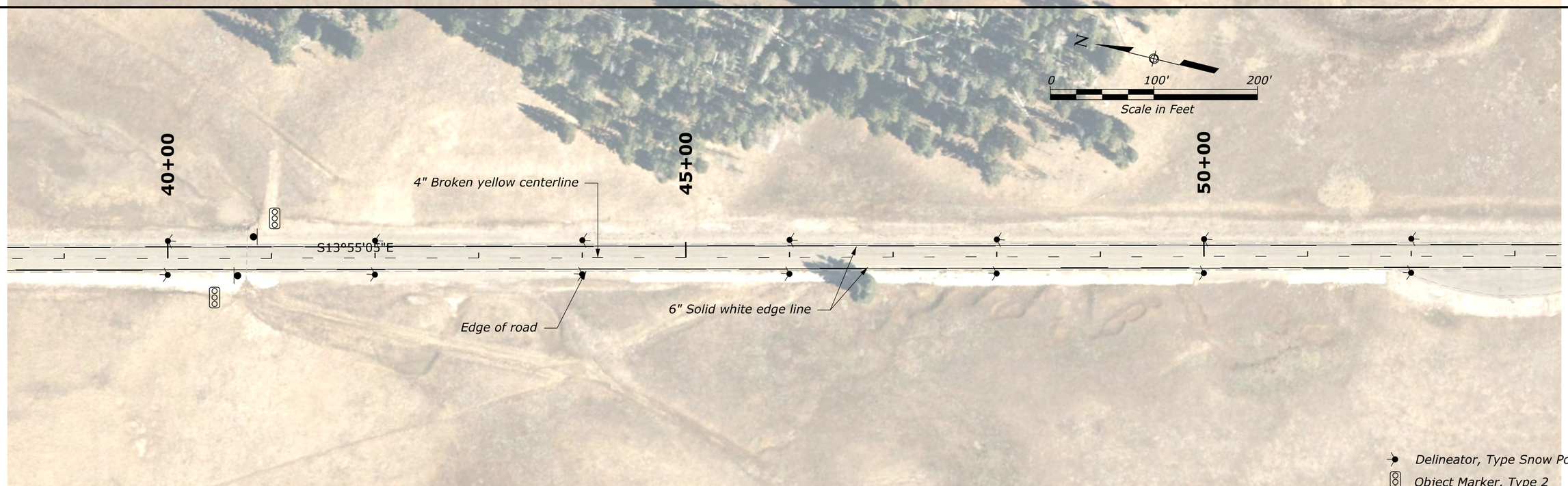

NOTE:

1. The horizontal alignment and the location of the existing and proposed features are not based on precise survey data. Adjust as necessary to fit field conditions.
2. Some features in the drawing are not drawn to scale and identify the approximate location of the feature. Final quantities will be determined from field measurements.
3. Construct asphalt concrete pavement patch type as shown in the quantity table or as identified by the CO. See Special 418-A for more information.
4. Match the existing striping unless otherwise noted. See the Tabulation of Quantities for more information.
5. Install Object Markers and Delineator, Type Snow Poles as shown in the plans and according to Special 633-A.

NORTH ENTRANCE ROAD
25+00 to 53+00

c:\pw_work_cfl\dms14320\PLN(GRCA)FTNP.dgn [NORTH ENTRANCE ROAD 2]

8 June 2026 4:01 PM

© 2026 Microsoft Corporation © 2026 Maxar ©CNES (2026) Distribution Airbus DS © Mapbox

GRCA PMIS NO.: 192082

STATE	PROJECT	SHEET NUMBER
AZ	NP GRCA 14(2)	D.3

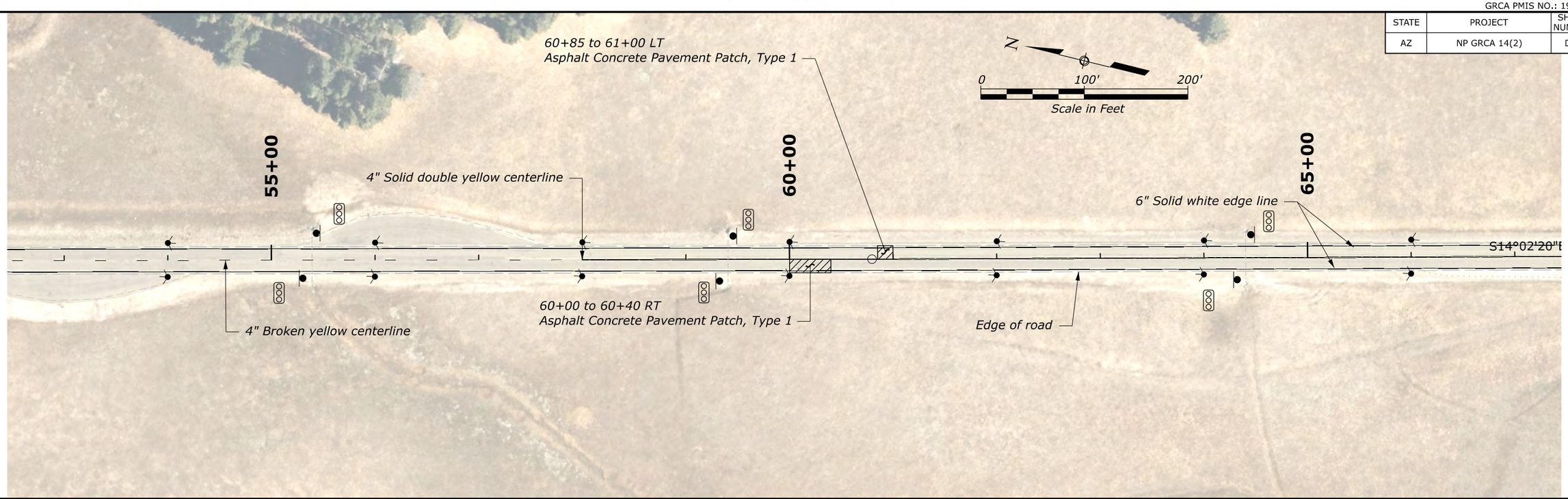

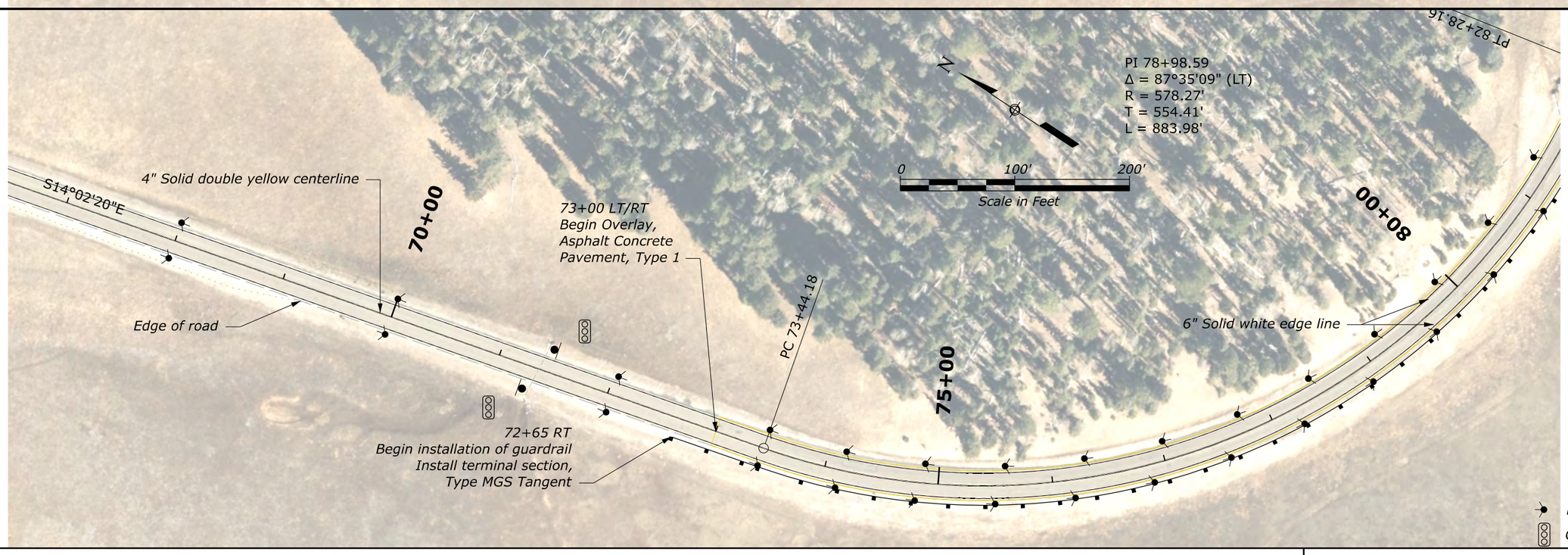

NOTE:

1. The horizontal alignment and the location of the existing and proposed features are not based on precise survey data. Adjust as necessary to fit field conditions.
2. Some features in the drawing are not drawn to scale and identify the approximate location of the feature. Final quantities will be determined from field measurements.
3. Construct asphalt concrete pavement patch type as shown in the quantity table or as identified by the CO. See Special 418-A for more information.
4. Match the existing striping unless otherwise noted. See the Tabulation of Quantities for more information.
5. Install Object Markers and Delineator, Type Snow Poles as shown in the plans and according to Special 633-A.

NORTH ENTRANCE ROAD
53+00 to 81+00

c:\pw_work_cfl\dms14320\PLN\(GRCA)FTNP.dgn (NORTH ENTRANCE ROAD 3)

8 June 2026 4:01 PM

© 2026 Microsoft Corporation © 2026 Maxar ©CNES (2026) Distribution Airbus DS © Mapbox

GRCA PMIS NO.: 192082

STATE	PROJECT	SHEET NUMBER
AZ	NP GRCA 14(2)	D.4

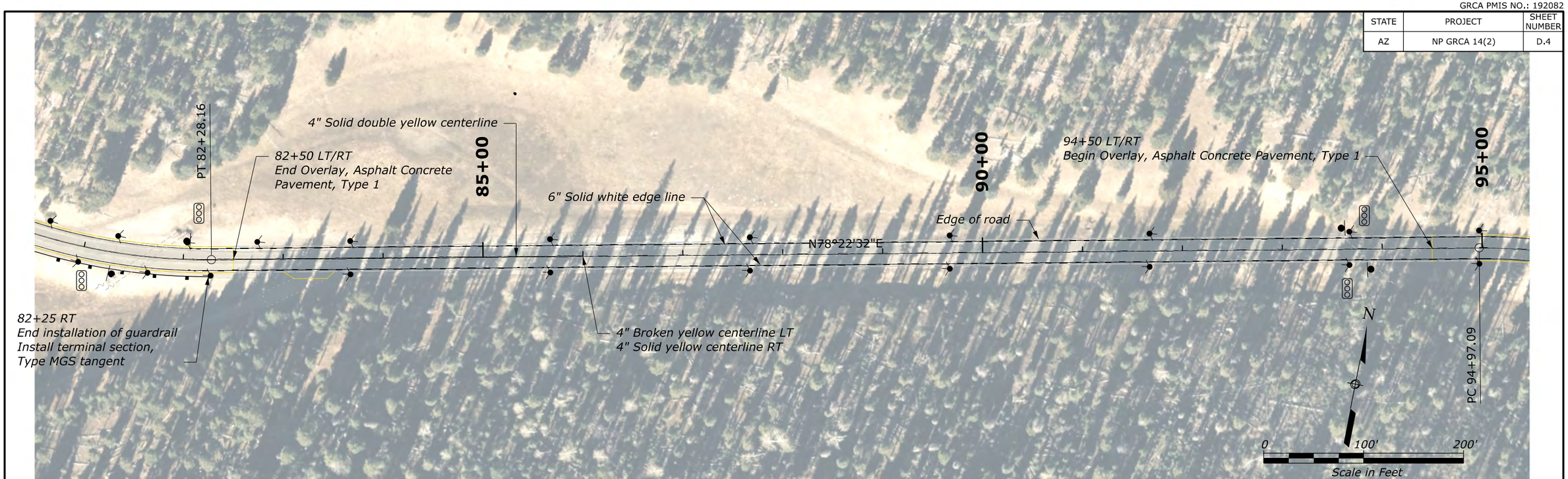

NOTE:

1. The horizontal alignment and the location of the existing and proposed features are not based on precise survey data. Adjust as necessary to fit field conditions.
2. Some features in the drawing are not drawn to scale and identify the approximate location of the feature. Final quantities will be determined from field measurements.
3. Construct asphalt concrete pavement patch type as shown in the quantity table or as identified by the CO. See Special 418-A for more information.
4. Match the existing striping unless otherwise noted. See the Tabulation of Quantities for more information.
5. Install Object Markers and Delineator, Type Snow Poles as shown in the plans and according to Special 633-A.

NORTH ENTRANCE ROAD
81+00 to 109+00

c:\pw_work_cfl\dms14320\PLN\(GRCA)FTNP.dgn (NORTH ENTRANCE ROAD 4)

8 June 2026 4:01 PM

© 2026 Microsoft Corporation © 2026 Maxar ©CNES (2026) Distribution Airbus DS © Maptox

GRCA PMIS NO.: 192082

STATE	PROJECT	SHEET NUMBER
AZ	NP GRCA 14(2)	D.5

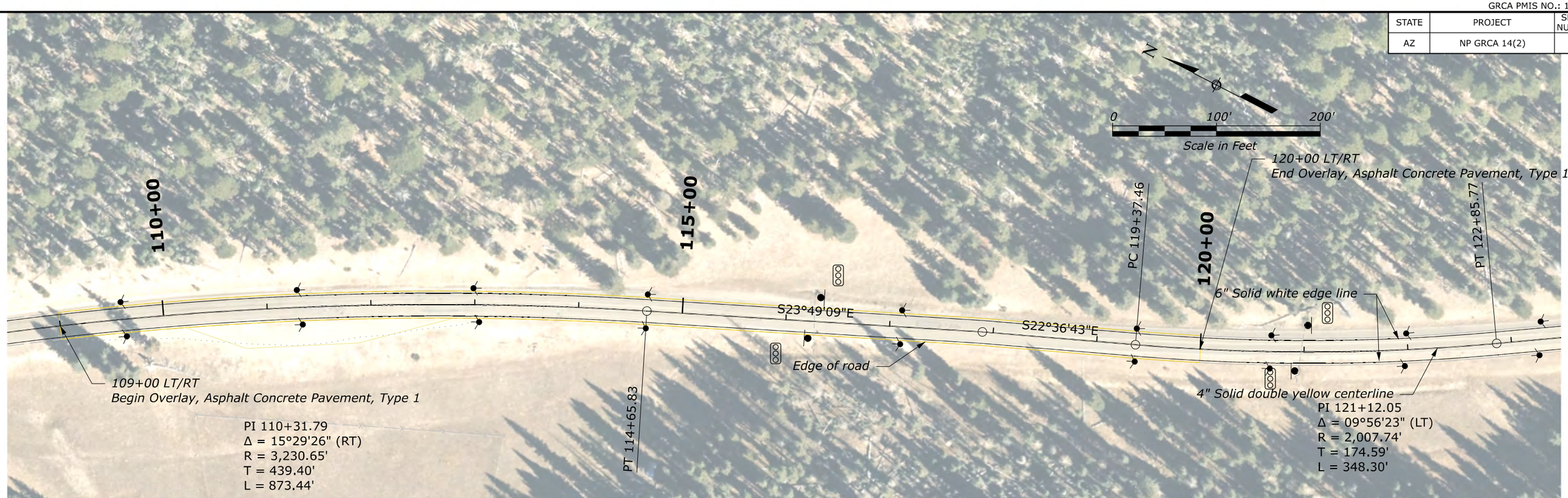

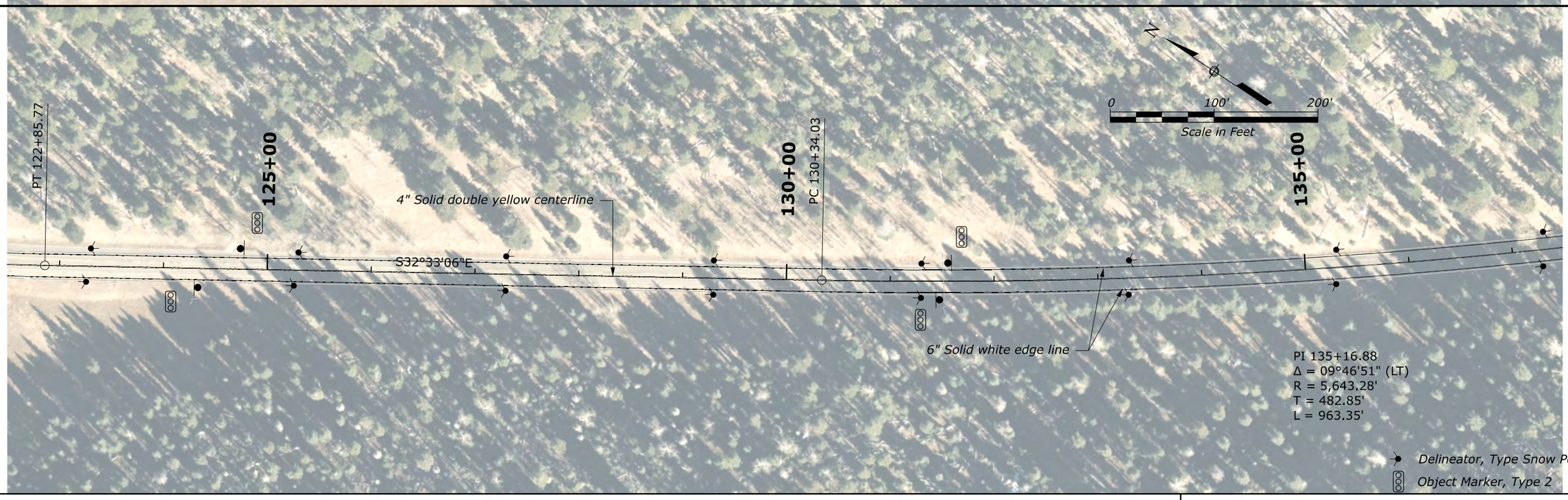

NOTE:

1. The horizontal alignment and the location of the existing and proposed features are not based on precise survey data. Adjust as necessary to fit field conditions.
2. Some features in the drawing are not drawn to scale and identify the approximate location of the feature. Final quantities will be determined from field measurements.
3. Construct asphalt concrete pavement patch type as shown in the quantity table or as identified by the CO. See Special 418-A for more information.
4. Match the existing striping unless otherwise noted. See the Tabulation of Quantities for more information.
5. Install Object Markers and Delineator, Type Snow Poles as shown in the plans and according to Special 633-A.

NORTH ENTRANCE ROAD
109+00 to 137+00

c:\pw_work_cflvdms14320\PLN(GRCA)FTNP.dgn [NORTH ENTRANCE ROAD 5]

8 June 2026 4:01 PM

© 2026 Microsoft Corporation © 2026 Maxar ©CNES (2026) Distribution Airbus DS © Maptox

GRCA PMIS NO.: 192082

STATE	PROJECT	SHEET NUMBER
AZ	NP GRCA 14(2)	D.6

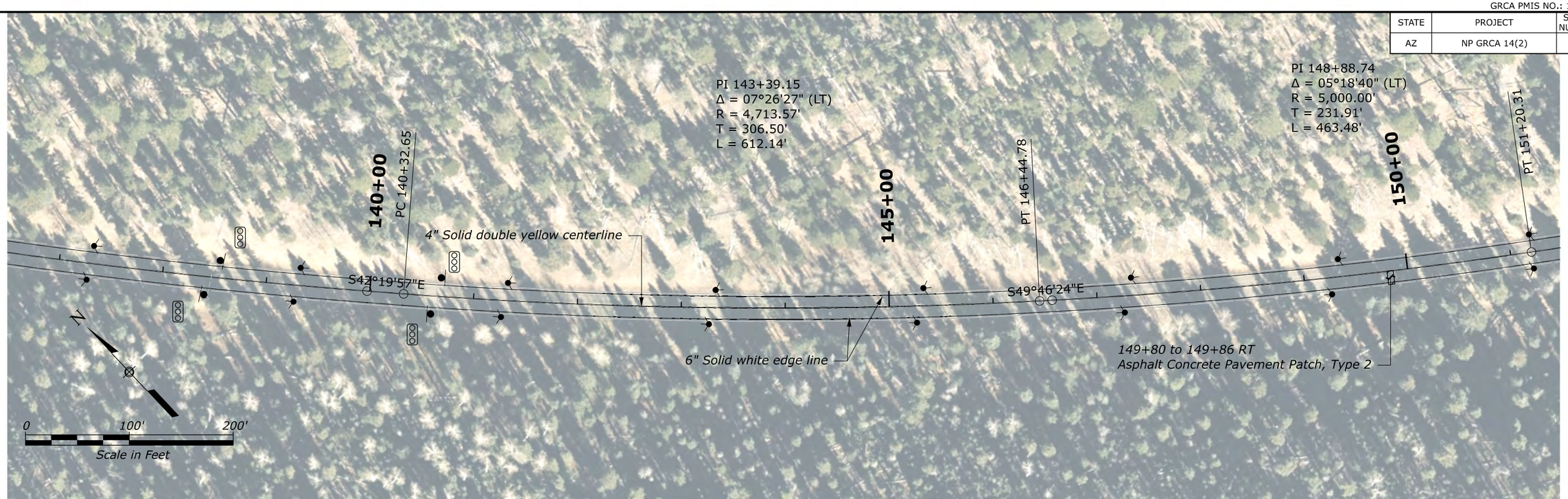

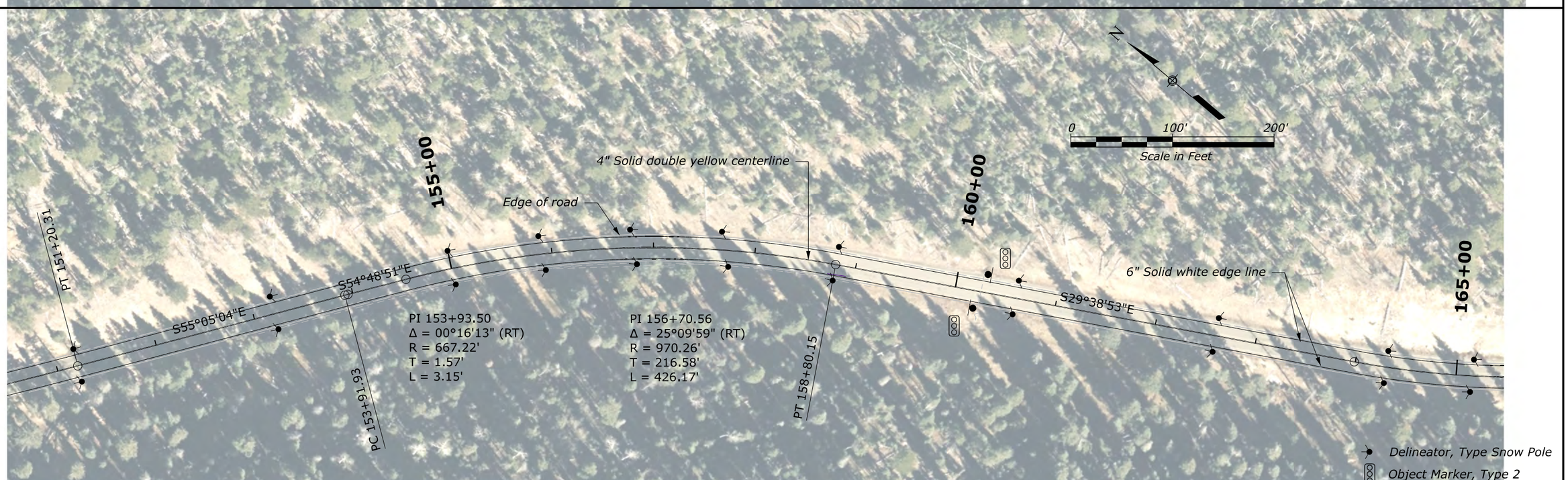

NOTE:

1. The horizontal alignment and the location of the existing and proposed features are not based on precise survey data. Adjust as necessary to fit field conditions.
2. Some features in the drawing are not drawn to scale and identify the approximate location of the feature. Final quantities will be determined from field measurements.
3. Construct asphalt concrete pavement patch type as shown in the quantity table or as identified by the CO. See Special 418-A for more information.
4. Match the existing striping unless otherwise noted. See the Tabulation of Quantities for more information.
5. Install Object Markers and Delineator, Type Snow Poles as shown in the plans and according to Special 633-A.

NORTH ENTRANCE ROAD
137+00 to 165+00

c:\pw_work-cfhdms14320\PLN(GRCA)FTNP.dgn [NORTH ENTRANCE ROAD 6]

8 June 2026 4:01 PM

© 2026 Microsoft Corporation © 2026 Maxar ©CNES (2026) Distribution Airbus DS © Mapbox

GRCA PMIS NO.: 192082

STATE	PROJECT	SHEET NUMBER
AZ	NP GRCA 14(2)	D.7

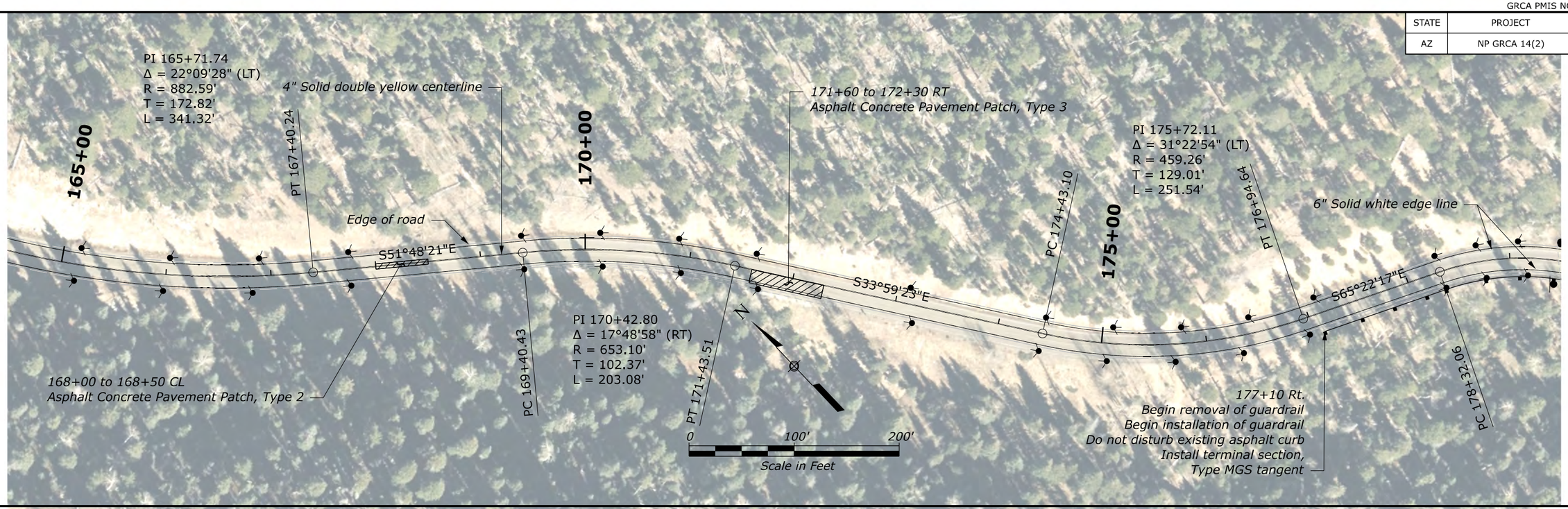

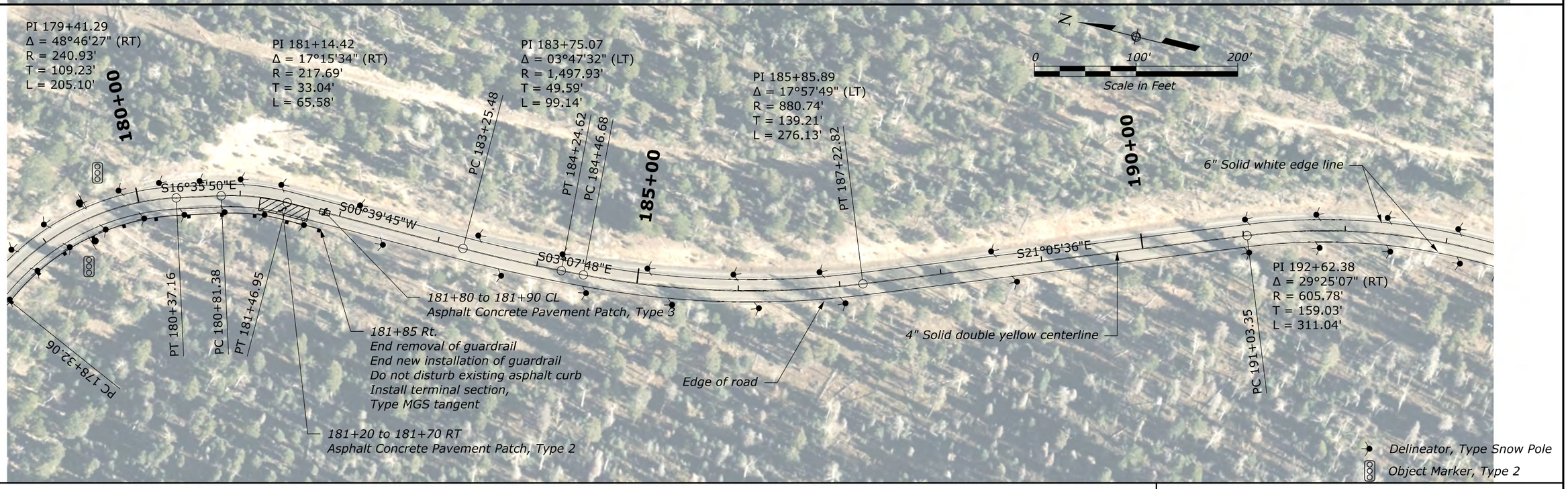

NOTE:

1. The horizontal alignment and the location of the existing and proposed features are not based on precise survey data. Adjust as necessary to fit field conditions.
2. Some features in the drawing are not drawn to scale and identify the approximate location of the feature. Final quantities will be determined from field measurements.
3. Construct asphalt concrete pavement patch type as shown in the quantity table or as identified by the CO. See Special 418-A for more information.
4. Match the existing striping unless otherwise noted. See the Tabulation of Quantities for more information.
5. Install Object Markers and Delineator, Type Snow Poles as shown in the plans and according to Special 633-A.

NORTH ENTRANCE ROAD
165+00 to 193+00

c:\pw_work_cflvdms14320\PLN(GRCA)FTNP.dgn [NORTH ENTRANCE ROAD 7]

8 June 2026 4:01 PM

© 2026 Microsoft Corporation © 2026 Maxar ©CNES (2026) Distribution Airbus DS © Maxar

GRCA PMIS NO.: 192082

STATE	PROJECT	SHEET NUMBER
AZ	NP GRCA 14(2)	D.8

NOTE:

1. The horizontal alignment and the location of the existing and proposed features are not based on precise survey data. Adjust as necessary to fit field conditions.
2. Some features in the drawing are not drawn to scale and identify the approximate location of the feature. Final quantities will be determined from field measurements.
3. Construct asphalt concrete pavement patch type as shown in the quantity table or as identified by the CO. See Special 418-A for more information.
4. Match the existing striping unless otherwise noted. See the Tabulation of Quantities for more information.
5. Install Object Markers and Delineator, Type Snow Poles as shown in the plans and according to Special 633-A.

NORTH ENTRANCE ROAD
193+00 to 221+00

c:\pw_work_cfl\dms14320\PLN(GRCA)FTNP.dgn (NORTH ENTRANCE ROAD 8)

8 June 2026 4:01 PM

© 2026 Microsoft Corporation © 2026 Maxar ©CNES (2026) Distribution Airbus DS © Mapbox

GRCA PMIS NO.: 192082

STATE	PROJECT	SHEET NUMBER
AZ	NP GRCA 14(2)	D.9

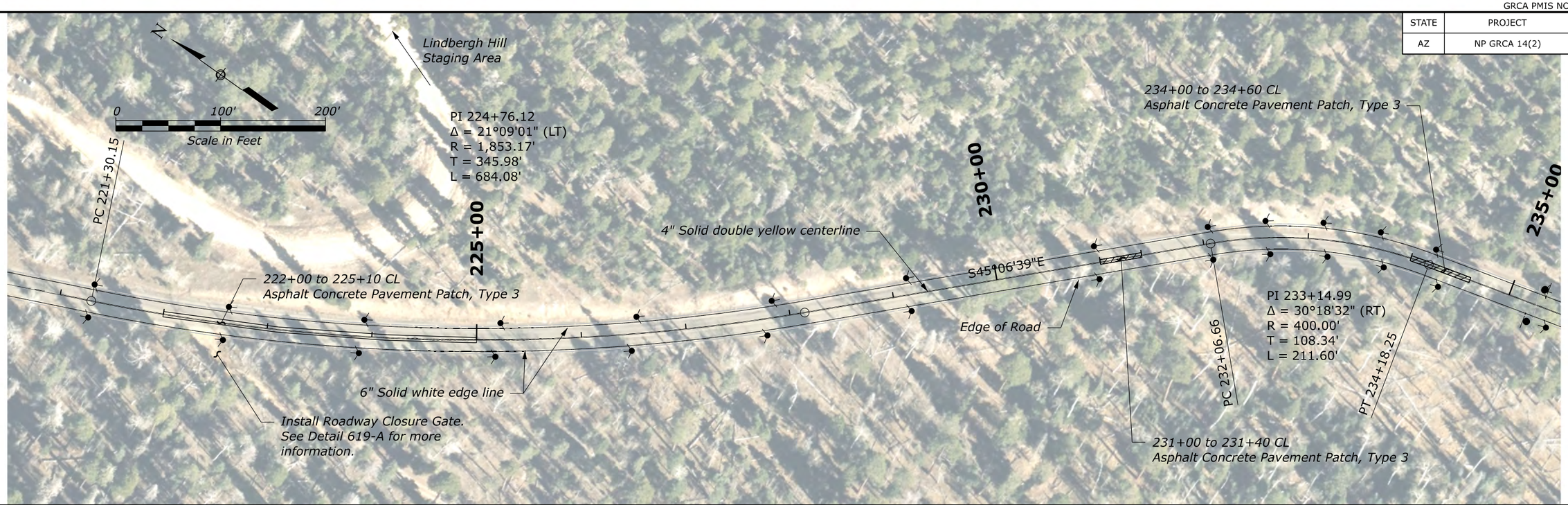

NOTE:

1. The horizontal alignment and the location of the existing and proposed features are not based on precise survey data. Adjust as necessary to fit field conditions.
2. Some features in the drawing are not drawn to scale and identify the approximate location of the feature. Final quantities will be determined from field measurements.
3. Construct asphalt concrete pavement patch type as shown in the quantity table or as identified by the CO. See Special 418-A for more information.
4. Match the existing striping unless otherwise noted. See the Tabulation of Quantities for more information.
5. Install Object Markers and Delineator, Type Snow Poles as shown in the plans and according to Special 633-A.

NORTH ENTRANCE ROAD
221+00 to 249+00

c:\pw_work_cfl\dms14320\PLN\(GRCA)FTNP.dgn (NORTH ENTRANCE ROAD 9)

8 June 2026 4:01 PM

© 2026 Microsoft Corporation © 2026 Maxar ©CNES (2026) Distribution Airbus DS © Mapbox

GRCA PMIS NO.: 192082

STATE	PROJECT	SHEET NUMBER
AZ	NP GRCA 14(2)	D.10

NOTE:

1. The horizontal alignment and the location of the existing and proposed features are not based on precise survey data. Adjust as necessary to fit field conditions.
2. Some features in the drawing are not drawn to scale and identify the approximate location of the feature. Final quantities will be determined from field measurements.
3. Construct asphalt concrete pavement patch type as shown in the quantity table or as identified by the CO. See Special 418-A for more information.
4. Match the existing striping unless otherwise noted. See the Tabulation of Quantities for more information.
5. Install Object Markers and Delineator, Type Snow Poles as shown in the plans and according to Special 633-A.

NORTH ENTRANCE ROAD
249+00 to 277+00

c:\pw_work_cfl\dms14320\PLN\(GRCA)FTNP.dgn (NORTH ENTRANCE ROAD 10)

8 June 2026 4:01 PM

© 2026 Microsoft Corporation © 2026 Maxar ©CNES (2026) Distribution Airbus DS © Mapbox

GRCA PMIS NO.: 192082

STATE	PROJECT	SHEET NUMBER
AZ	NP GRCA 14(2)	D.11

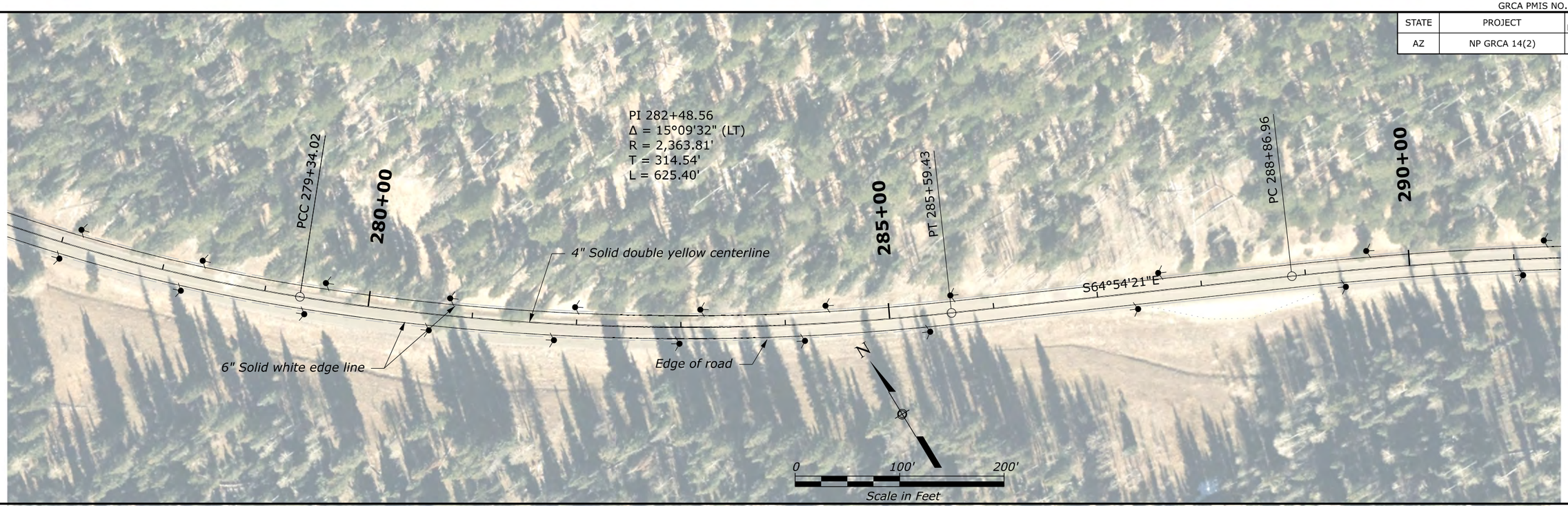

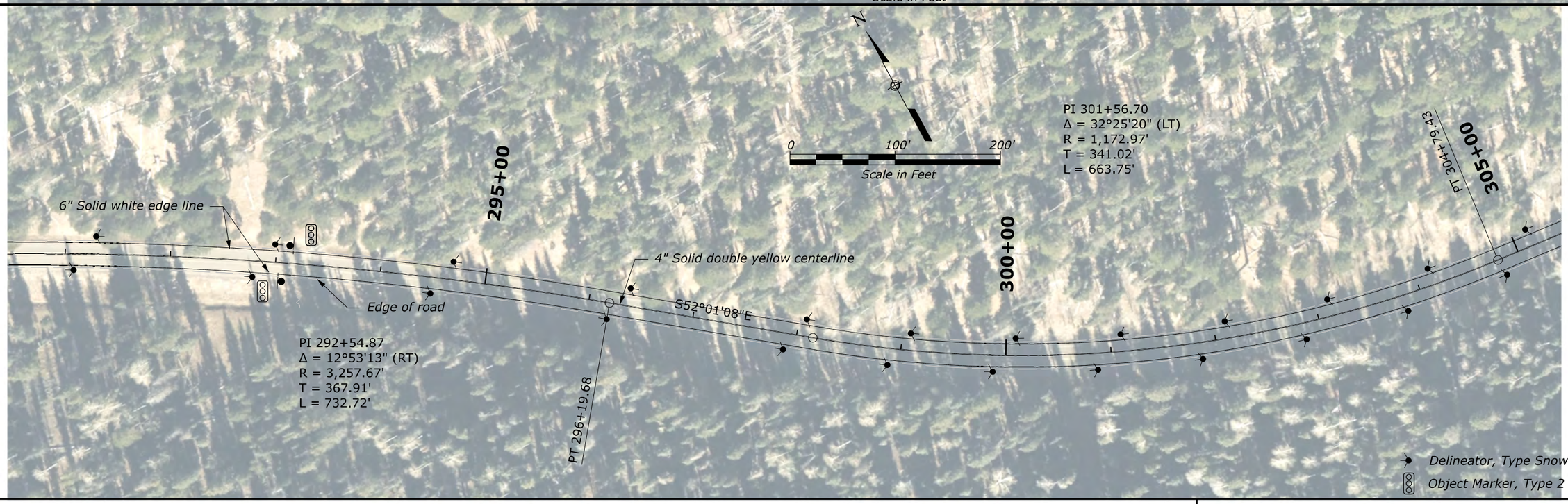

NOTE:

1. The horizontal alignment and the location of the existing and proposed features are not based on precise survey data. Adjust as necessary to fit field conditions.
2. Some features in the drawing are not drawn to scale and identify the approximate location of the feature. Final quantities will be determined from field measurements.
3. Construct asphalt concrete pavement patch type as shown in the quantity table or as identified by the CO. See Special 418-A for more information.
4. Match the existing striping unless otherwise noted. See the Tabulation of Quantities for more information.
5. Install Object Markers and Delineator, Type Snow Poles as shown in the plans and according to Special 633-A.

NORTH ENTRANCE ROAD
277+00 to 305+00

c:\pw_work_cfl\dms14320\PLN\(GRCA)FTNP.dgn (NORTH ENTRANCE ROAD 11)

8 June 2026 4:01 PM

© 2026 Microsoft Corporation © 2026 Maxar ©CNES (2026) Distribution Airbus DS © Maptox

GRCA PMIS NO.: 192082

STATE	PROJECT	SHEET NUMBER
AZ	NP GRCA 14(2)	D.12

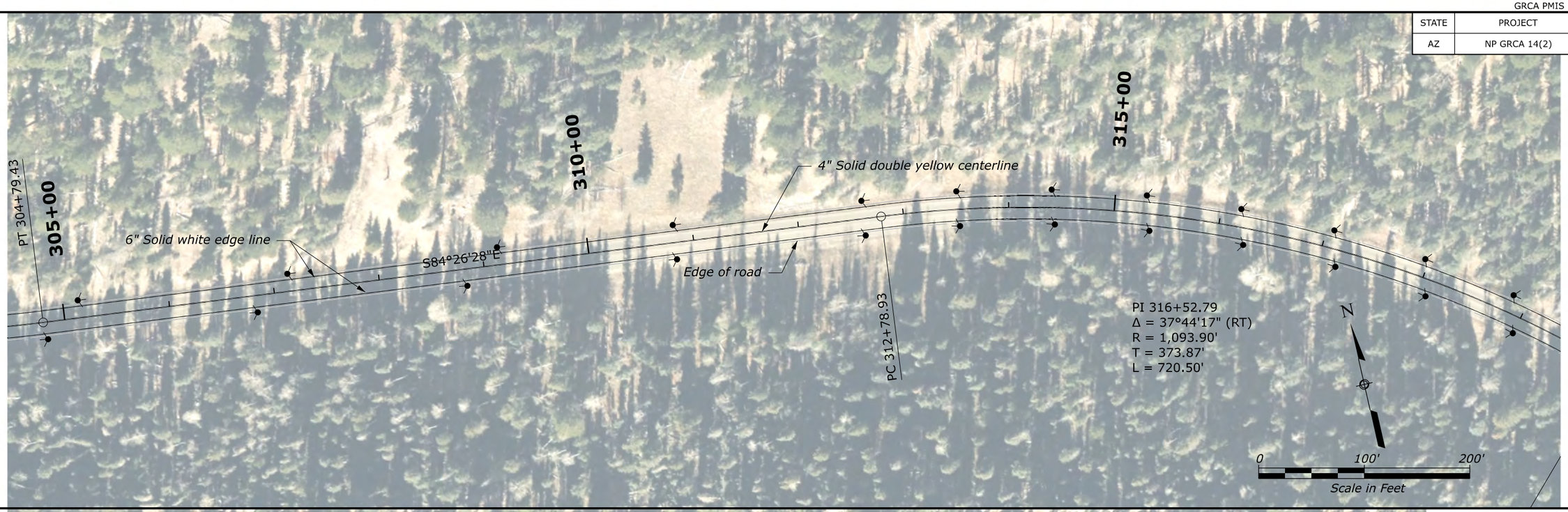

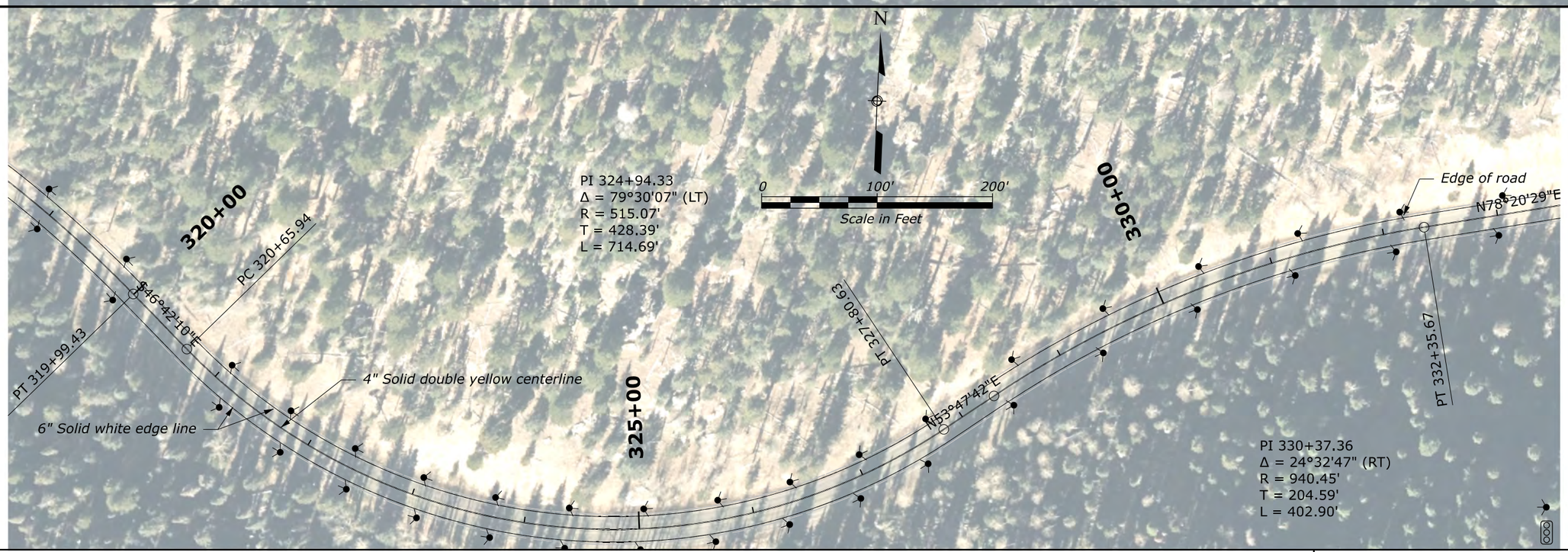

NOTE:

1. The horizontal alignment and the location of the existing and proposed features are not based on precise survey data. Adjust as necessary to fit field conditions.
2. Some features in the drawing are not drawn to scale and identify the approximate location of the feature. Final quantities will be determined from field measurements.
3. Construct asphalt concrete pavement patch type as shown in the quantity table or as identified by the CO. See Special 418-A for more information.
4. Match the existing striping unless otherwise noted. See the Tabulation of Quantities for more information.
5. Install Object Markers and Delineator, Type Snow Poles as shown in the plans and according to Special 633-A.

NORTH ENTRANCE ROAD
305+00 to 333+00

c:\pw_work_cfl\dms14320\PLN\GRCA\FTNP.dgn [NORTH ENTRANCE ROAD 12]

8 June 2026 4:01 PM

© 2026 Microsoft Corporation © 2026 Maxar ©CNES (2026) Distribution Airbus DS © Mapbox

GRCA PMIS NO.: 192082

STATE	PROJECT	SHEET NUMBER
AZ	NP GRCA 14(2)	D.13

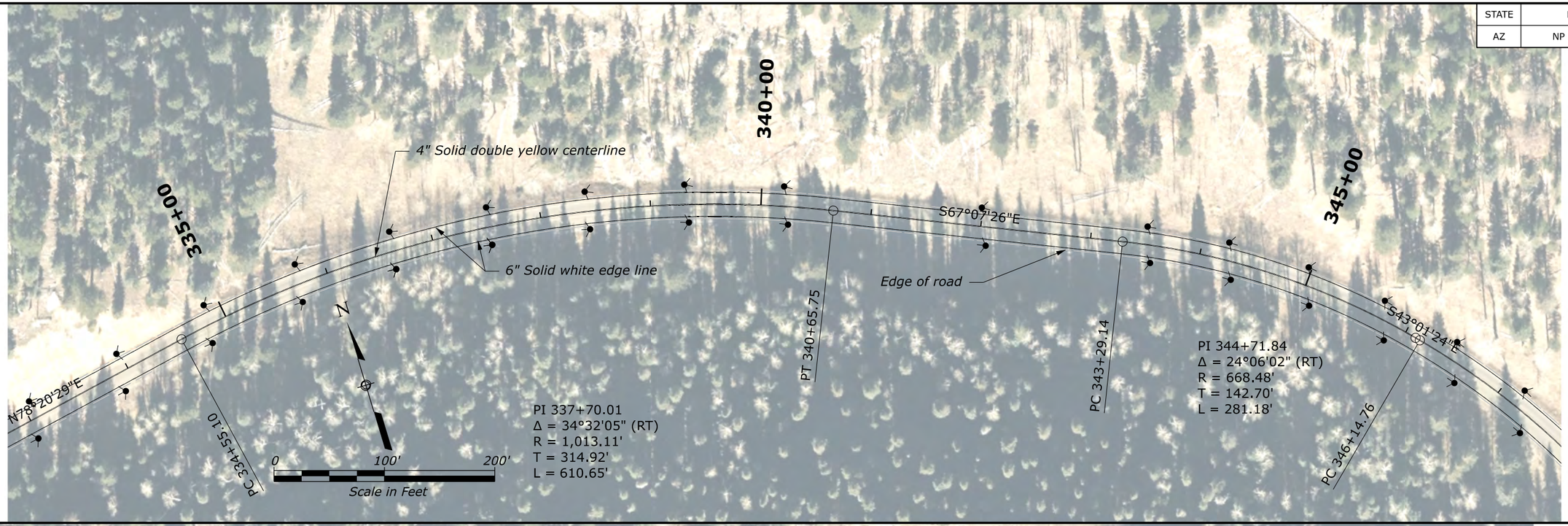

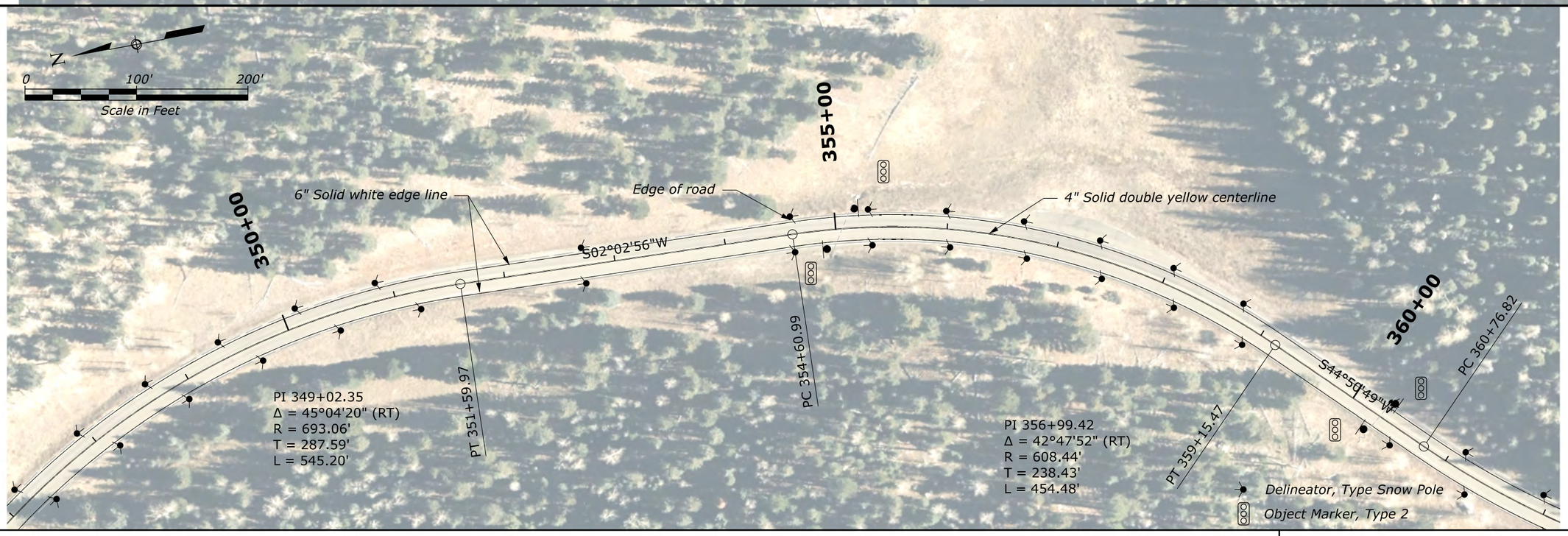

NOTE:

1. *The horizontal alignment and the location of the existing and proposed features are not based on precise survey data. Adjust as necessary to fit field conditions.*
2. *Some features in the drawing are not drawn to scale and identify the approximate location of the feature. Final quantities will be determined from field measurements.*
3. *Construct asphalt concrete pavement patch type as shown in the quantity table or as identified by the CO. See Special 418-A for more information.*
4. *Match the existing striping unless otherwise noted. See the Tabulation of Quantities for more information.*
5. *Install Object Markers and Delineator, Type Snow Poles as shown in the plans and according to Special 633-A.*

NORTH ENTRANCE ROAD
333+00 to 362+00

c:\pw_work_cfl\dms14320\PLN\(GRCA)FTNP.dgn (NORTH ENTRANCE ROAD 13)

8 June 2026 4:01 PM

© 2026 Microsoft Corporation © 2026 Maxar ©CNES (2026) Distribution Airbus DS © Maptox

GRCA PMIS NO.: 192082

STATE	PROJECT	SHEET NUMBER
AZ	NP GRCA 14(2)	D.14

NOTE:

1. The horizontal alignment and the location of the existing and proposed features are not based on precise survey data. Adjust as necessary to fit field conditions.
2. Some features in the drawing are not drawn to scale and identify the approximate location of the feature. Final quantities will be determined from field measurements.
3. Construct asphalt concrete pavement patch type as shown in the quantity table or as identified by the CO. See Special 418-A for more information.
4. Match the existing striping unless otherwise noted. See the Tabulation of Quantities for more information.
5. Install Object Markers and Delineator, Type Snow Poles as shown in the plans and according to Special 633-A.

NORTH ENTRANCE ROAD
362+00 to 390+00

c:\pw_work_cflvdms14320\PLN(GRCA)FTNP.dgn (NORTH ENTRANCE ROAD 14)

8 June 2026 4:01 PM

© 2026 Microsoft Corporation © 2026 Maxar ©CNES (2026) Distribution Airbus DS © Maptox

GRCA PMIS NO.: 192082

STATE	PROJECT	SHEET NUMBER
AZ	NP GRCA 14(2)	D.15

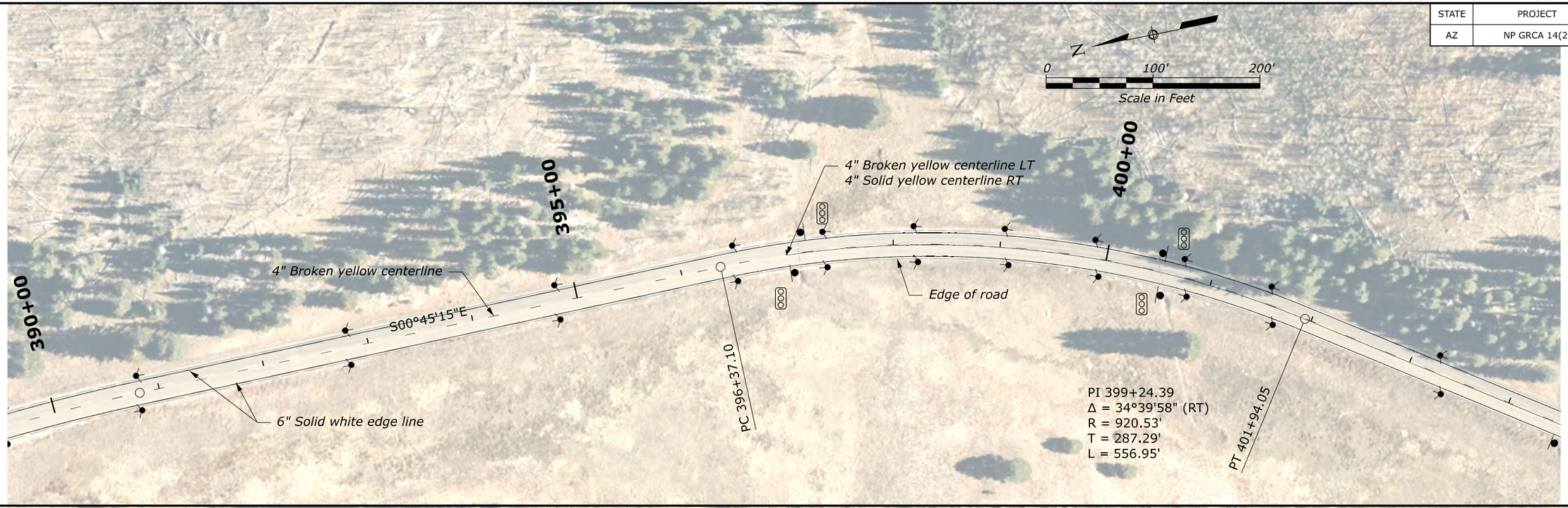

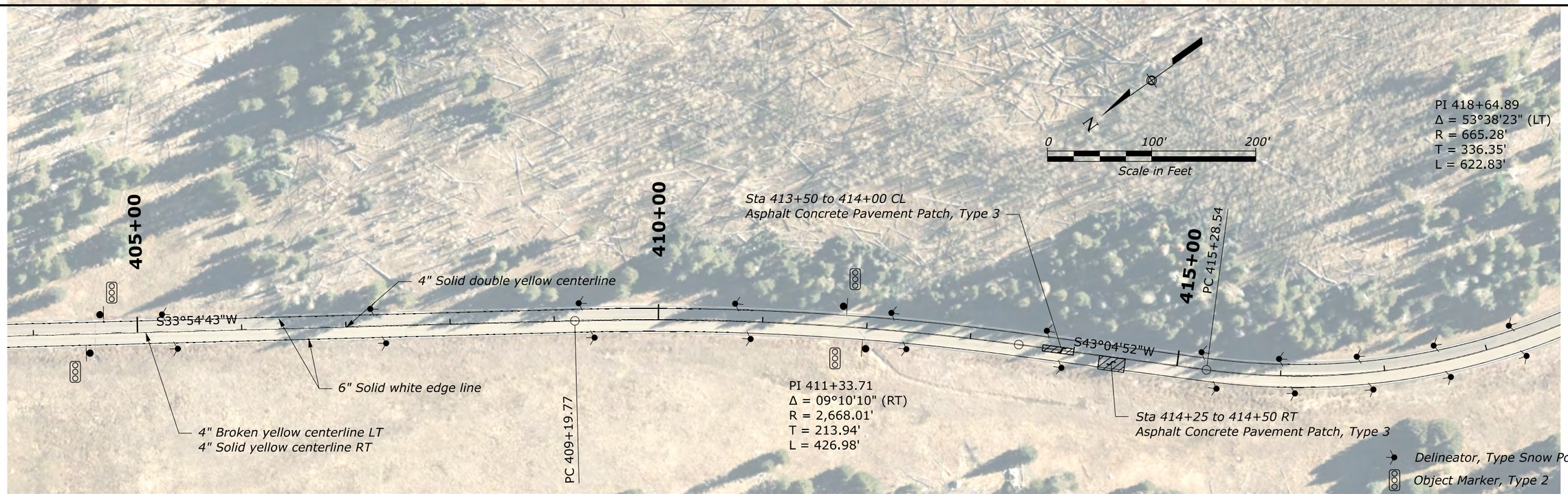

NOTE:

1. The horizontal alignment and the location of the existing and proposed features are not based on precise survey data. Adjust as necessary to fit field conditions.
2. Some features in the drawing are not drawn to scale and identify the approximate location of the feature. Final quantities will be determined from field measurements.
3. Construct asphalt concrete pavement patch type as shown in the quantity table or as identified by the CO. See Special 418-A for more information.
4. Match the existing striping unless otherwise noted. See the Tabulation of Quantities for more information.
5. Install Object Markers and Delineator, Type Snow Poles as shown in the plans and according to Special 633-A.

NORTH ENTRANCE ROAD
390+00 to 418+00

c:\pw_work_cfl\dms14320\PLN(GRCA)FTNP.dgn [NORTH ENTRANCE ROAD 15]

8 June 2026 4:01 PM

© 2026 Microsoft Corporation © 2026 Maxar ©CNES (2026) Distribution Airbus DS © Mapbox

GRCA PMIS NO.: 192082

STATE	PROJECT	SHEET NUMBER
AZ	NP GRCA 14(2)	D.16

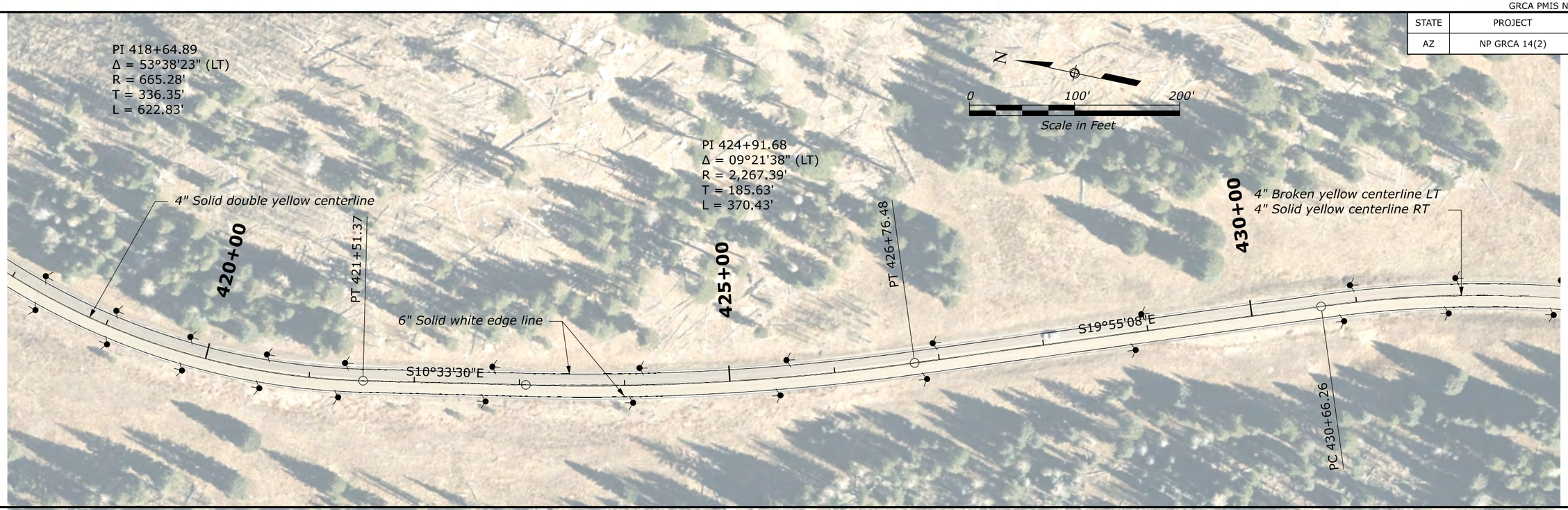

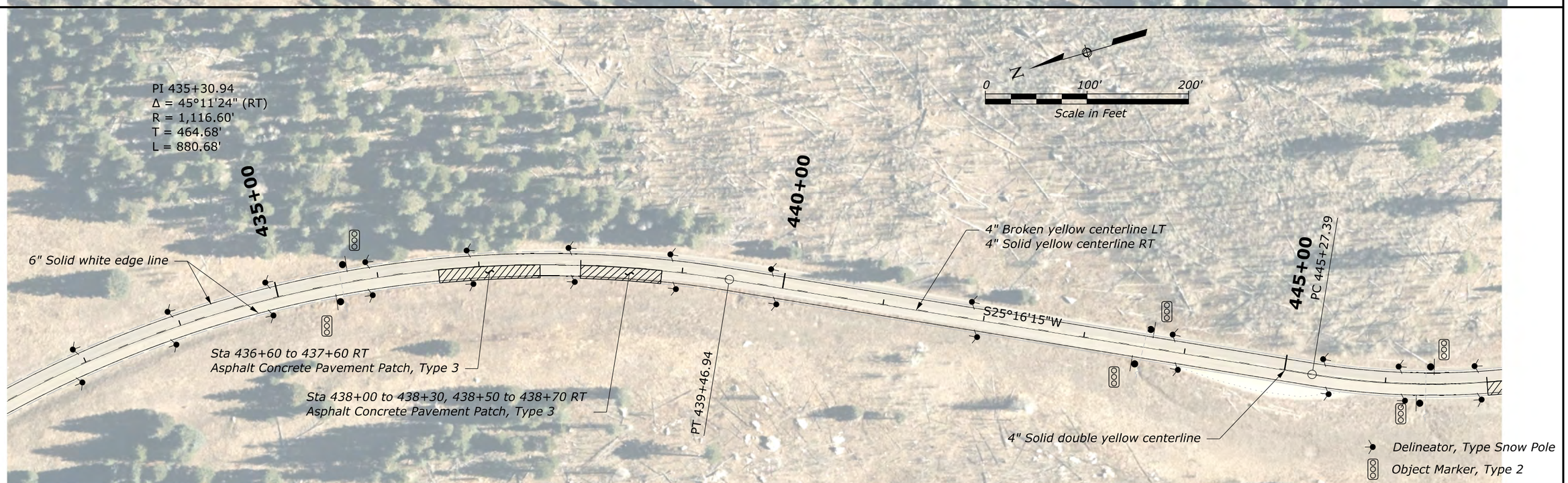

NOTE:

1. The horizontal alignment and the location of the existing and proposed features are not based on precise survey data. Adjust as necessary to fit field conditions.
2. Some features in the drawing are not drawn to scale and identify the approximate location of the feature. Final quantities will be determined from field measurements.
3. Construct asphalt concrete pavement patch type as shown in the quantity table or as identified by the CO. See Special 418-A for more information.
4. Match the existing striping unless otherwise noted. See the Tabulation of Quantities for more information.
5. Install Object Markers and Delineator, Type Snow Poles as shown in the plans and according to Special 633-A.

NORTH ENTRANCE ROAD
418+00 to 447+00

c:\pw_work_cfl\dms14320\PLN(GRCA)FTNP.dgn [NORTH ENTRANCE ROAD 16]

8 June 2026 4:01 PM

© 2026 Microsoft Corporation © 2026 Maxar ©CNES (2026) Distribution Airbus DS © Mapbox

GRCA PMIS NO.: 192082

STATE	PROJECT	SHEET NUMBER
AZ	NP GRCA 14(2)	D.17

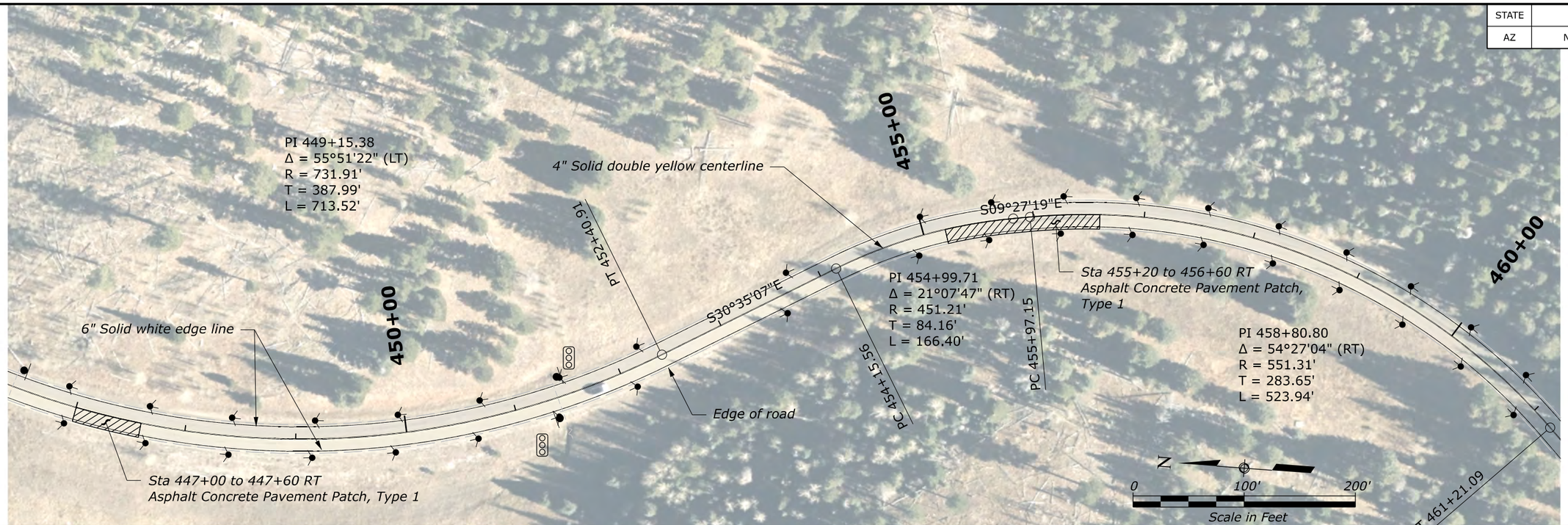

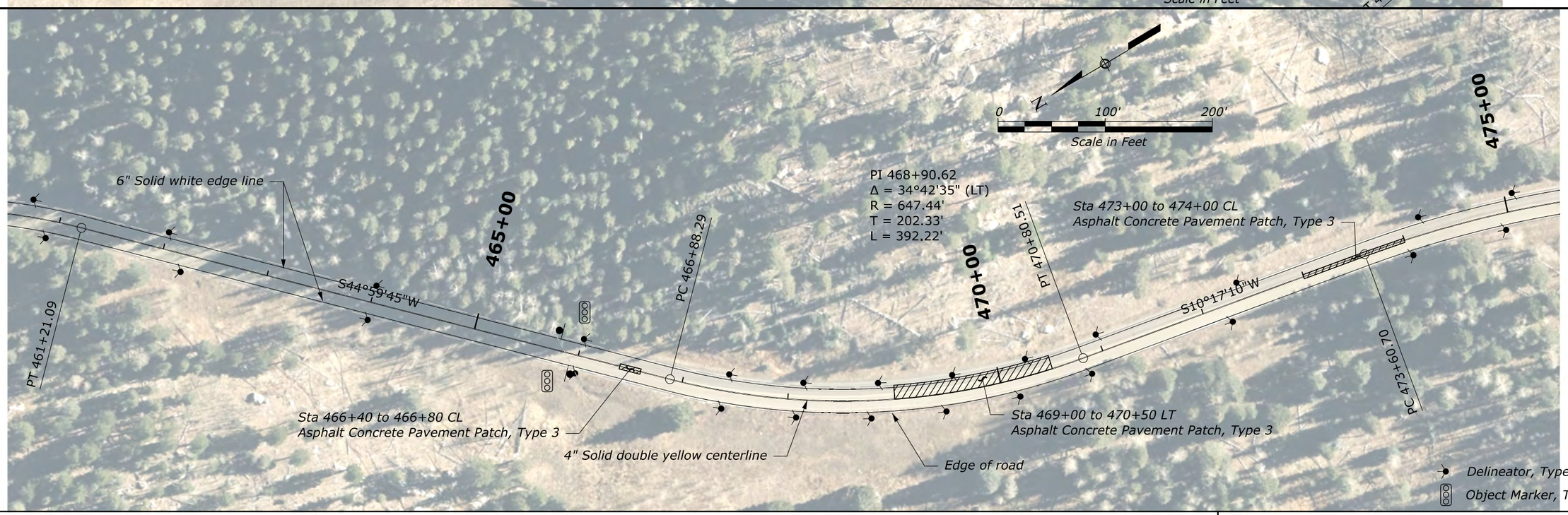

NOTE:

1. The horizontal alignment and the location of the existing and proposed features are not based on precise survey data. Adjust as necessary to fit field conditions.
2. Some features in the drawing are not drawn to scale and identify the approximate location of the feature. Final quantities will be determined from field measurements.
3. Construct asphalt concrete pavement patch type as shown in the quantity table or as identified by the CO. See Special 418-A for more information.
4. Match the existing striping unless otherwise noted. See the Tabulation of Quantities for more information.
5. Install Object Markers and Delineator, Type Snow Poles as shown in the plans and according to Special 633-A.

NORTH ENTRANCE ROAD
447+00 to 475+00

c:\pw_work-cfl\dms14320\PLN\GRCA\FTNP.dgn [NORTH ENTRANCE ROAD 17]

8 June 2026 4:01 PM

© 2026 Microsoft Corporation © 2026 Maxar ©CNES (2026) Distribution Airbus DS © Mapbox

GRCA PMIS NO.: 192082

STATE	PROJECT	SHEET NUMBER
AZ	NP GRCA 14(2)	D.18

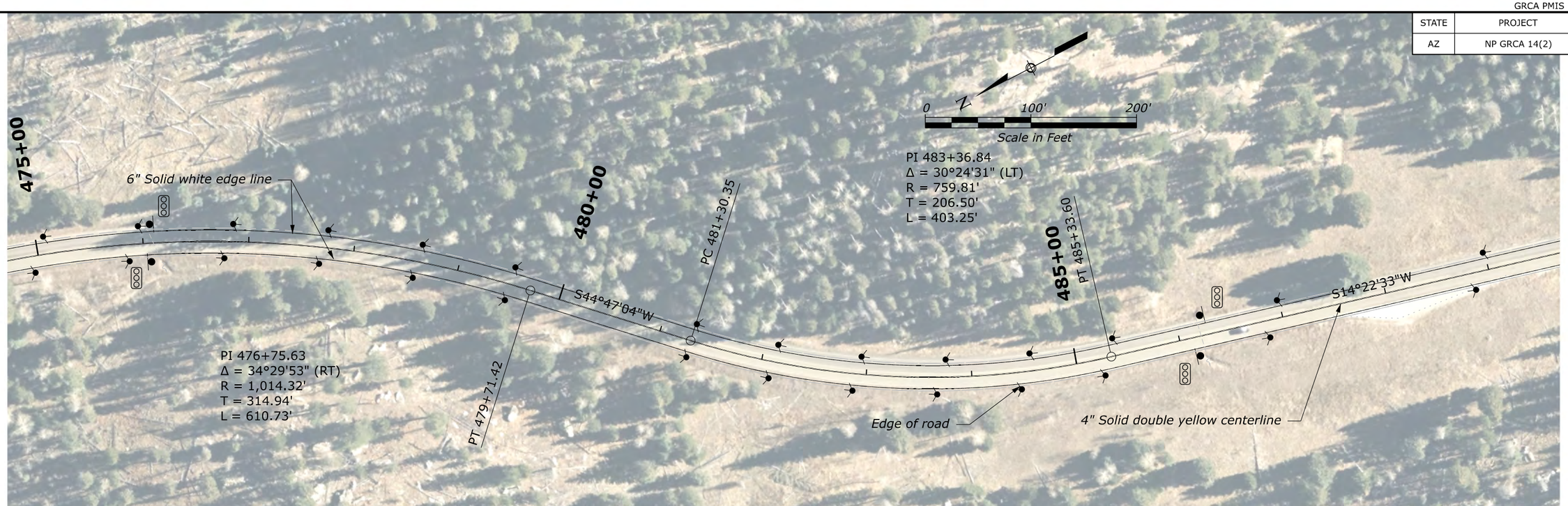

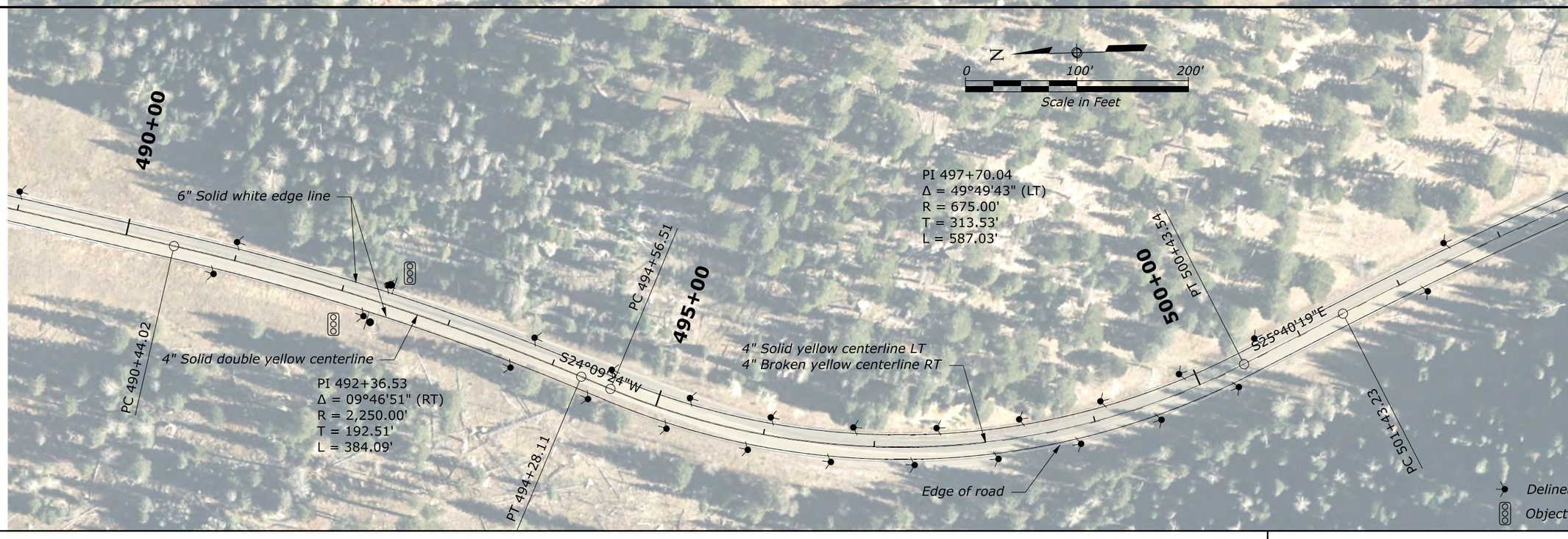

NOTE:

1. The horizontal alignment and the location of the existing and proposed features are not based on precise survey data. Adjust as necessary to fit field conditions.
2. Some features in the drawing are not drawn to scale and identify the approximate location of the feature. Final quantities will be determined from field measurements.
3. Construct asphalt concrete pavement patch type as shown in the quantity table or as identified by the CO. See Special 418-A for more information.
4. Match the existing striping unless otherwise noted. See the Tabulation of Quantities for more information.
5. Install Object Markers and Delineator, Type Snow Poles as shown in the plans and according to Special 633-A.

NORTH ENTRANCE ROAD
475+00 to 503+00

c:\pw_work_cfl\dms14320\PLN(GRCA)FTNP.dgn [NORTH ENTRANCE ROAD 18]

8 June 2026 4:01 PM

© 2026 Microsoft Corporation © 2026 Maxar ©CNES (2026) Distribution Airbus DS © Mapbox

GRCA PMIS NO.: 192082

STATE	PROJECT	SHEET NUMBER
AZ	NP GRCA 14(2)	D.19

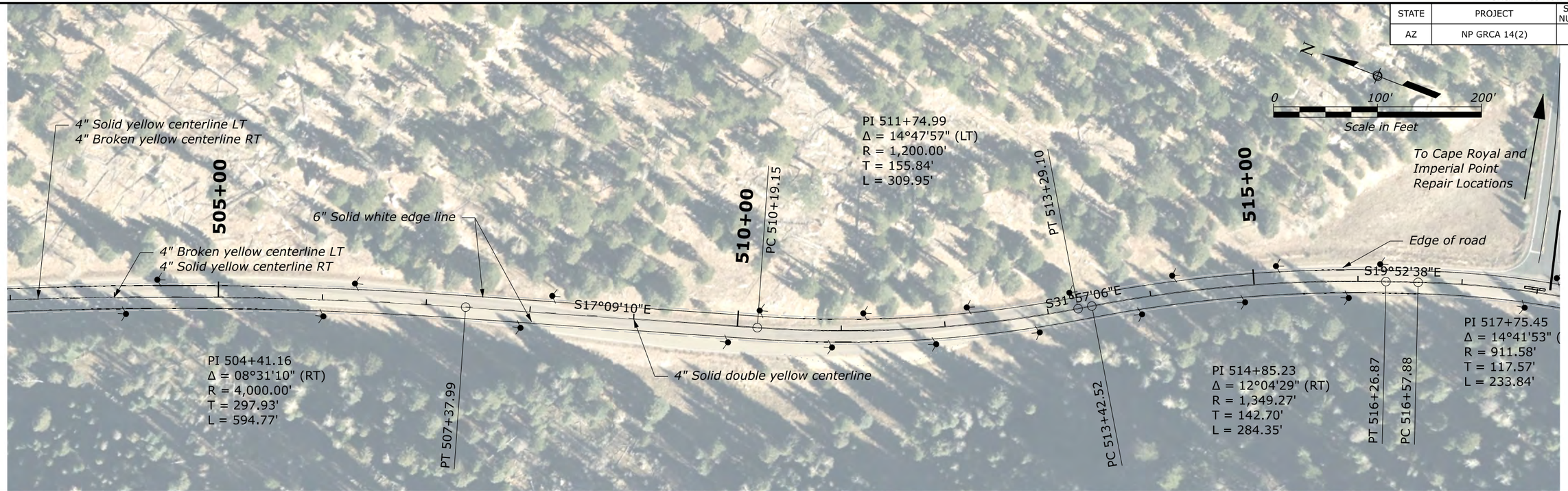

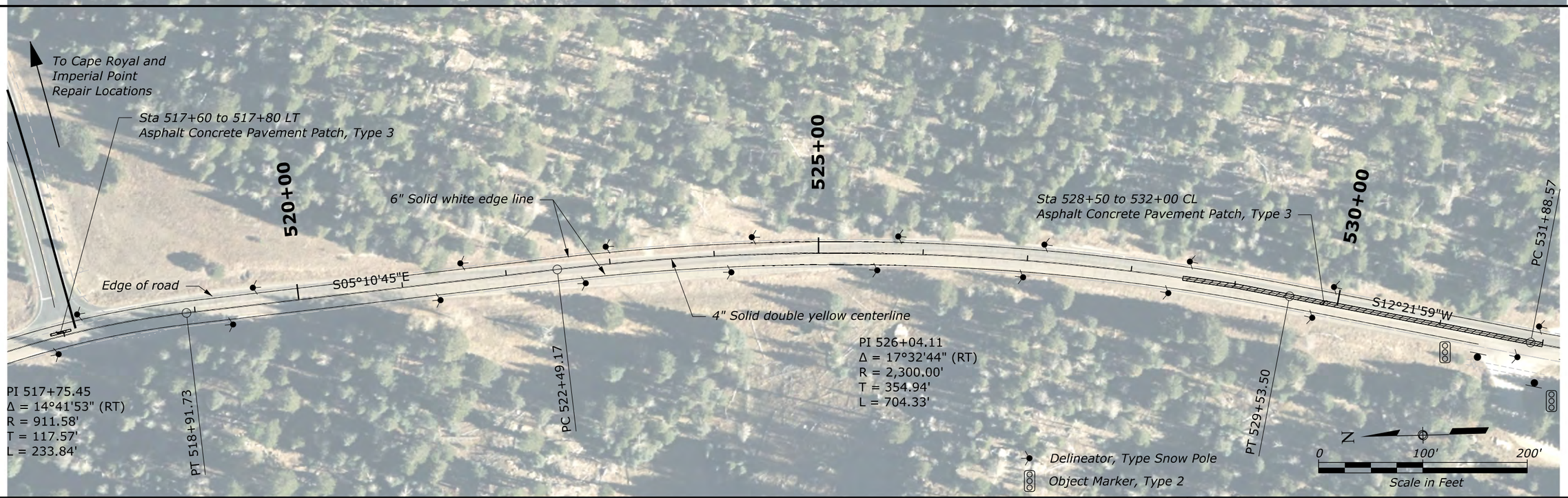

NOTE:

1. *The horizontal alignment and the location of the existing and proposed features are not based on precise survey data. Adjust as necessary to fit field conditions.*
2. *Some features in the drawing are not drawn to scale and identify the approximate location of the feature. Final quantities will be determined from field measurements.*
3. *Construct asphalt concrete pavement patch type as shown in the quantity table or as identified by the CO. See Special 418-A for more information.*
4. *Match the existing striping unless otherwise noted. See the Tabulation of Quantities for more information.*
5. *Install Object Markers and Delineator, Type Snow Poles as shown in the plans and according to Special 633-A.*

NORTH ENTRANCE ROAD
503+00 to 532+00

c:\pw_work_cflfdms14320\PLN(GRCA)FTNP.dgn (NORTH ENTRANCE ROAD 19)

8 June 2026 4:01 PM

© 2026 Microsoft Corporation © 2026 Maxar ©CNES (2026) Distribution Airbus DS © Mapbox

GRCA PMIS NO.: 192082

STATE	PROJECT	SHEET NUMBER
AZ	NP GRCA 14(2)	D.20

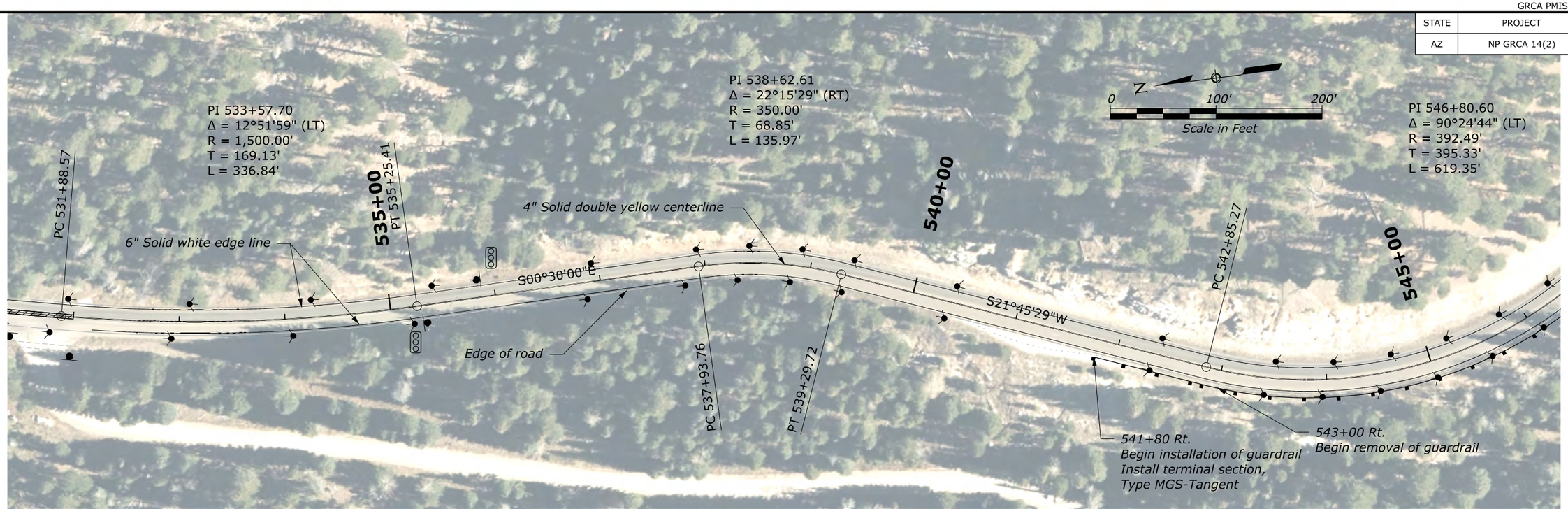

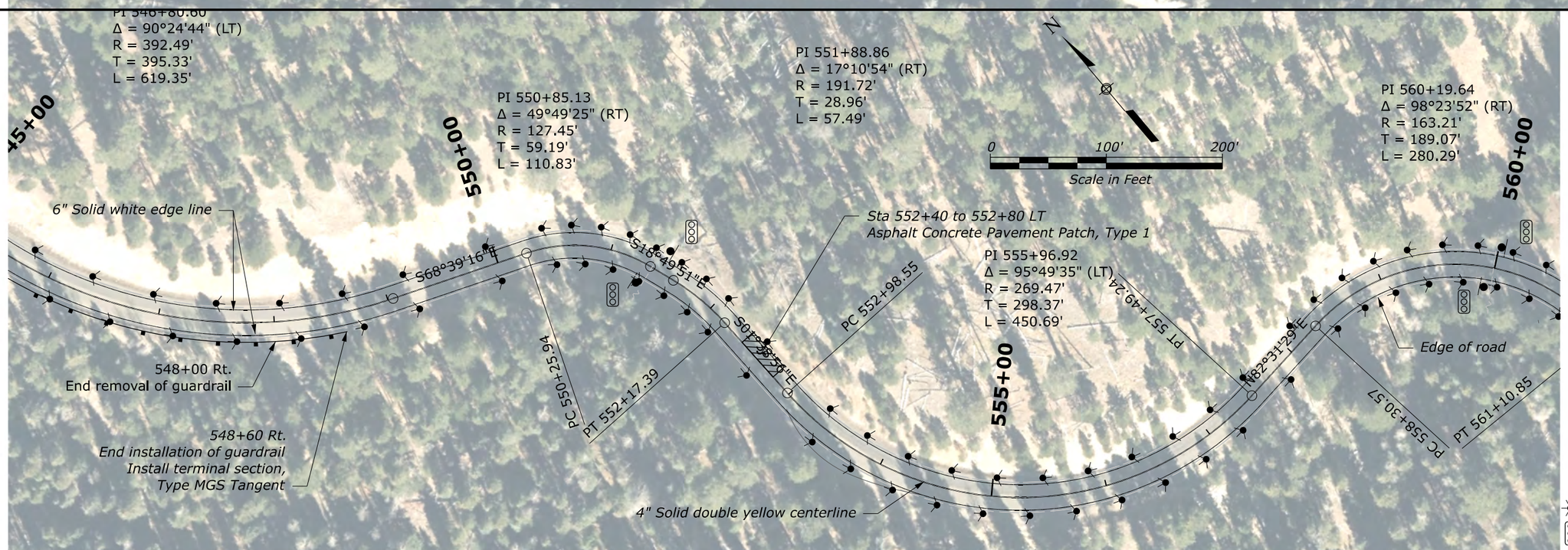

NOTE:

1. The horizontal alignment and the location of the existing and proposed features are not based on precise survey data. Adjust as necessary to fit field conditions.
2. Some features in the drawing are not drawn to scale and identify the approximate location of the feature. Final quantities will be determined from field measurements.
3. Construct asphalt concrete pavement patch type as shown in the quantity table or as identified by the CO. See Special 418-A for more information.
4. Match the existing striping unless otherwise noted. See the Tabulation of Quantities for more information.
5. Install Object Markers and Delineator, Type Snow Poles as shown in the plans and according to Special 633-A.

NORTH ENTRANCE ROAD
532+00 to 560+00

c:\pw_work_cflldms14320\PLN(GRCA)FTNP.dgn [NORTH ENTRANCE ROAD 20]

8 June 2026 4:01 PM

© 2026 Microsoft Corporation © 2026 Maxar ©CNES (2026) Distribution Airbus DS © Mapbox

GRCA PMIS NO.: 192082

STATE	PROJECT	SHEET NUMBER
AZ	NP GRCA 14(2)	D.21

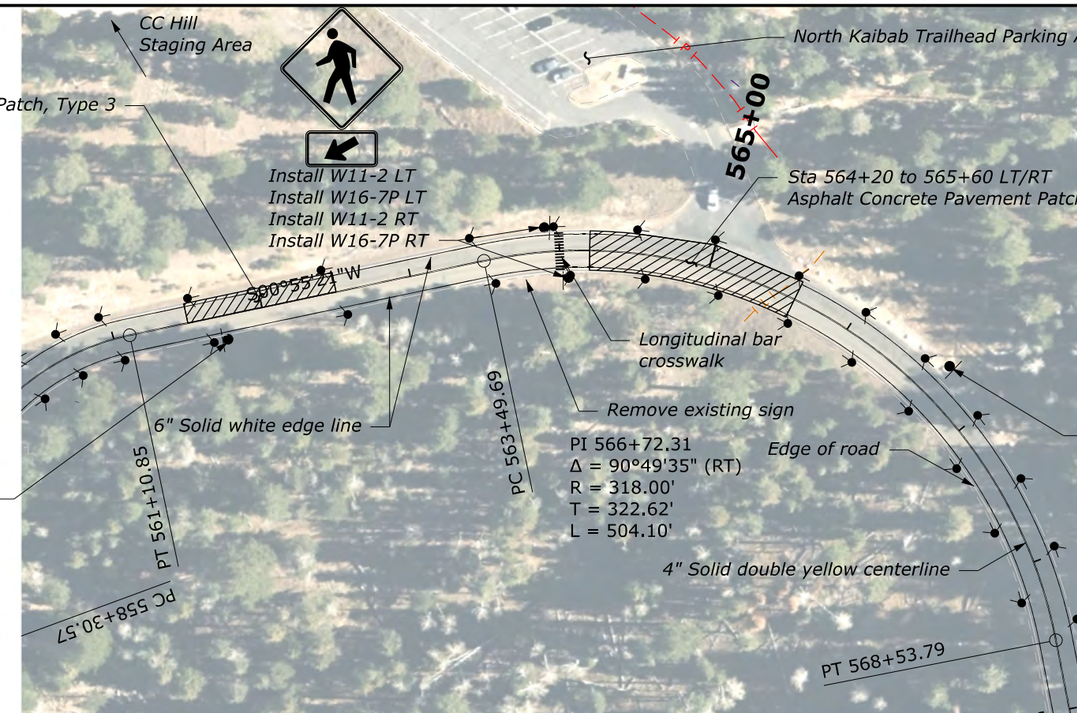

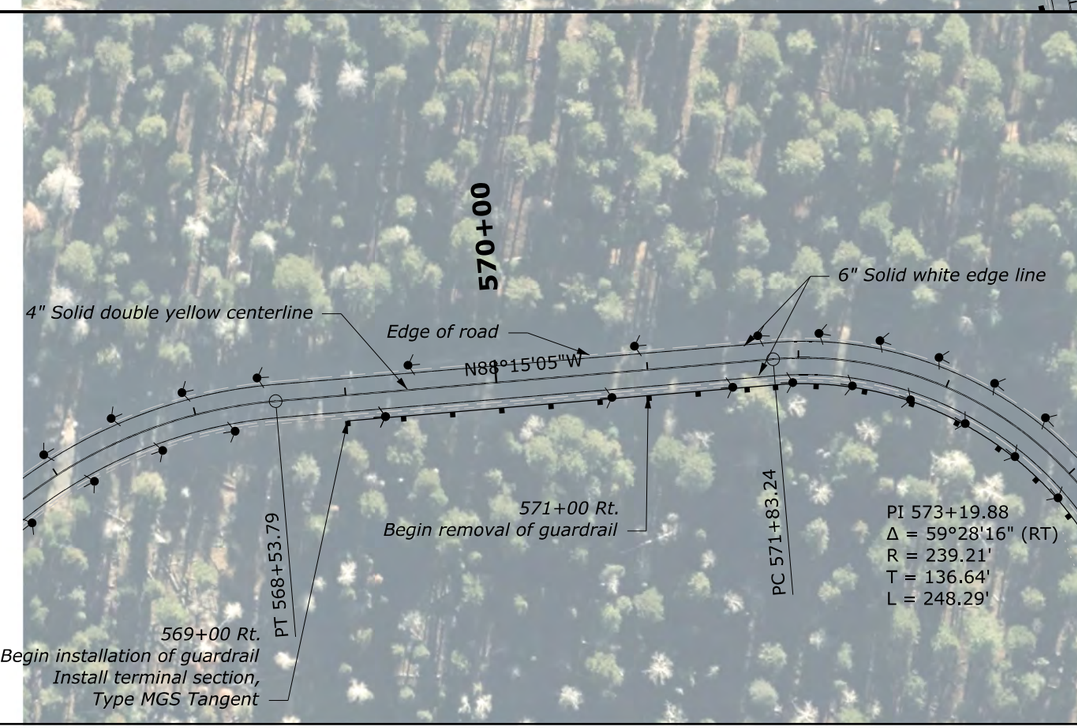

Delineator, Type Snow Pole

Object Marker, Type 2

NOTE:

1. The horizontal alignment and the location of the existing and proposed features are not based on precise survey data. Adjust as necessary to fit field conditions.
2. Some features in the drawing are not drawn to scale and identify the approximate location of the feature. Final quantities will be determined from field measurements.
3. Construct asphalt concrete pavement patch type as shown in the quantity table or as identified by the CO. See Special 418-A for more information.
4. Match the existing striping unless otherwise noted. See the Tabulation of Quantities for more information.
5. Install Object Markers and Delineator, Type Snow Poles as shown in the plans and according to Special 633-A.

NORTH ENTRANCE ROAD
560+00 to 575+00

c:\pw_work_cfl\dms14320\PLN(GRCA)FTNP.dgn [NORTH ENTRANCE ROAD 21]

8 June 2026 4:01 PM

© 2026 Microsoft Corporation © 2026 Maxar ©CNES (2026) Distribution Airbus DS © Mapbox

GRCA PMIS NO.: 192082

STATE	PROJECT	SHEET NUMBER
AZ	NP GRCA 14(2)	D.22

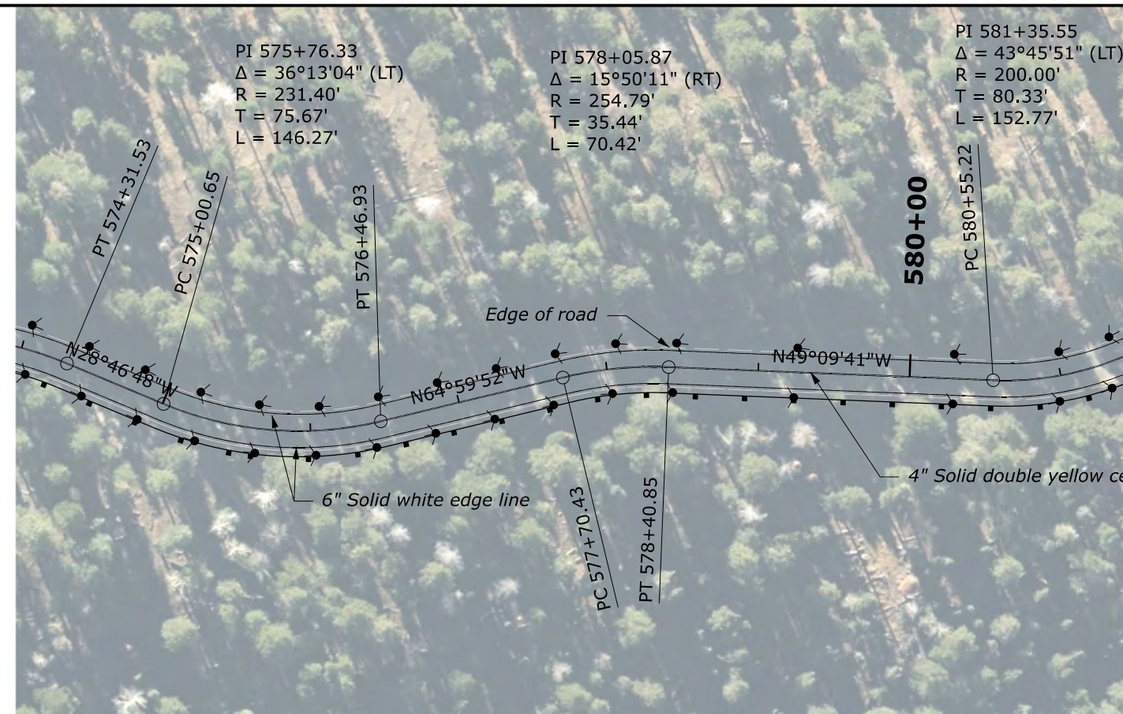

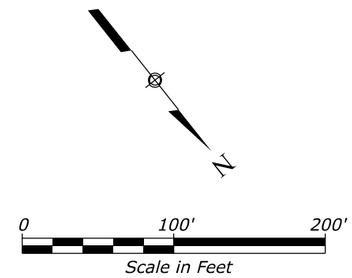

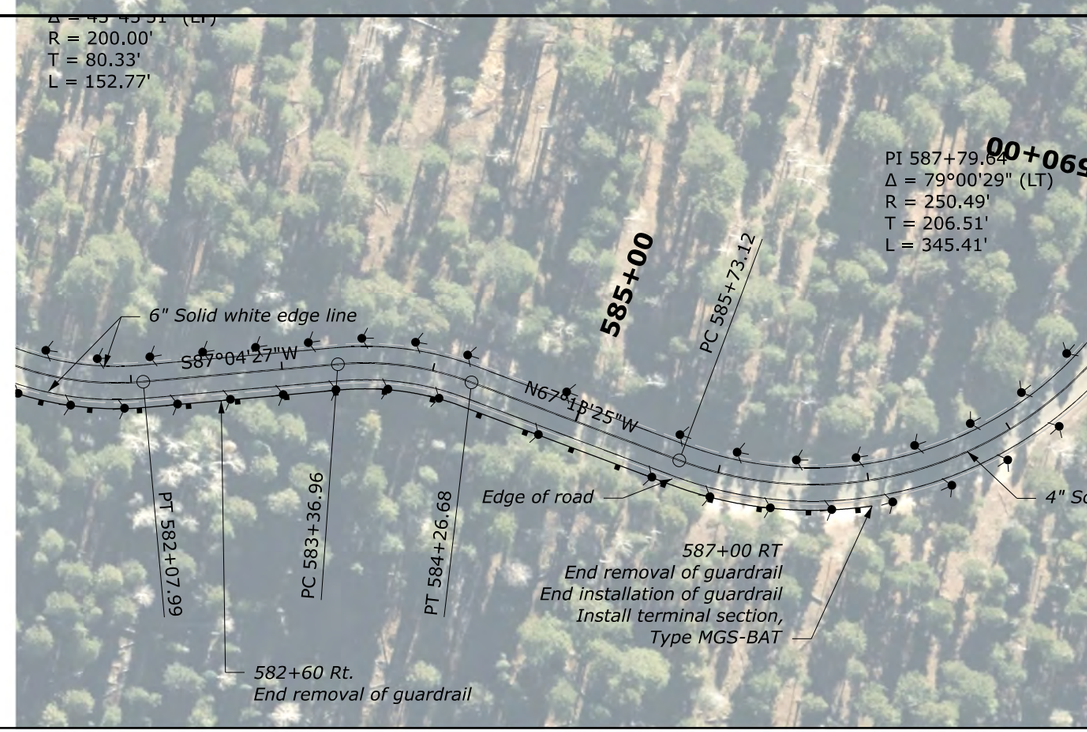

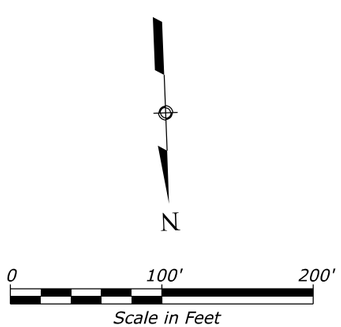

Delineator, Type Snow Pole

Object Marker, Type 2

NOTE:

1. The horizontal alignment and the location of the existing and proposed features are not based on precise survey data. Adjust as necessary to fit field conditions.
2. Some features in the drawing are not drawn to scale and identify the approximate location of the feature. Final quantities will be determined from field measurements.
3. Construct asphalt concrete pavement patch type as shown in the quantity table or as identified by the CO. See Special 418-A for more information.
4. Match the existing striping unless otherwise noted. See the Tabulation of Quantities for more information.
5. Install Object Markers and Delineator, Type Snow Poles as shown in the plans and according to Special 633-A.

NORTH ENTRANCE ROAD
575+00 to 588+00

c:\pw_work_cflv\dms14320\PLN(GRCA)FTNP.dgn [NORTH ENTRANCE ROAD 22]

8 June 2026 4:01 PM

© 2026 Microsoft Corporation © 2026 Maxar ©CNES (2026) Distribution Airbus DS © Maptox

STATE	PROJECT	SHEET NUMBER
AZ	NP GRCA 14(2)	D.23

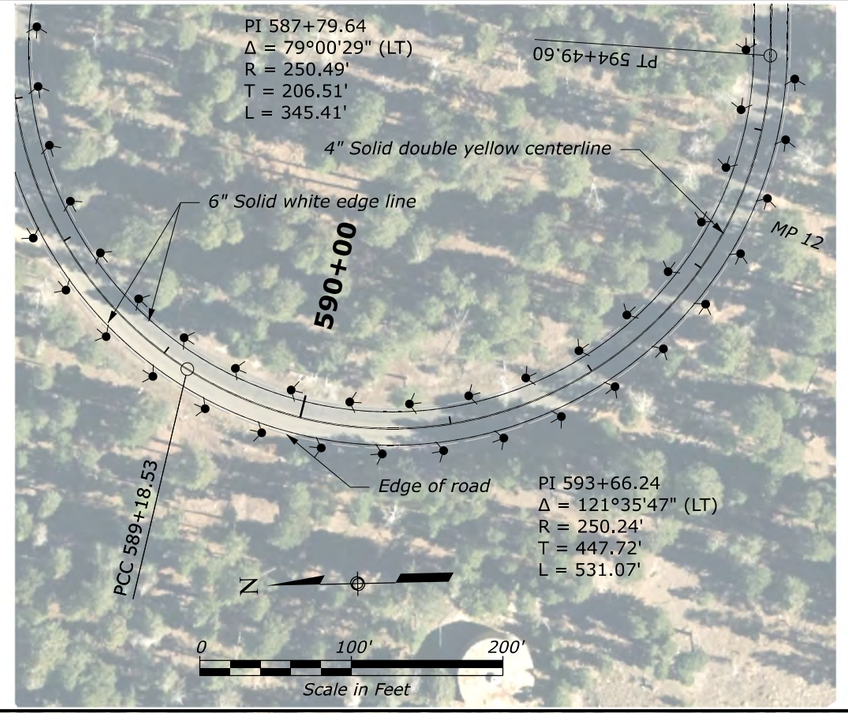

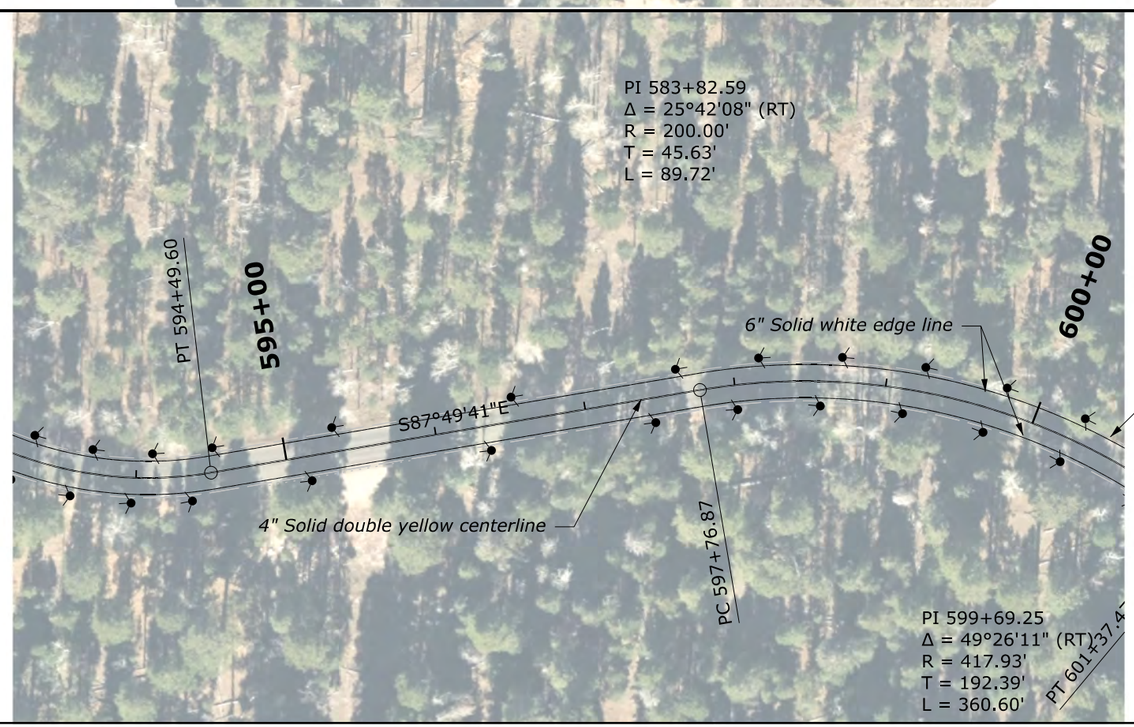

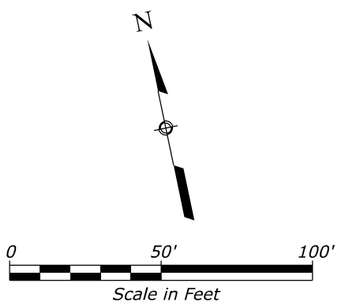

Delineator, Type Snow Pole

Object Marker, Type 2

NOTE:

1. The horizontal alignment and the location of the existing and proposed features are not based on precise survey data. Adjust as necessary to fit field conditions.
2. Some features in the drawing are not drawn to scale and identify the approximate location of the feature. Final quantities will be determined from field measurements.
3. Construct asphalt concrete pavement patch type as shown in the quantity table or as identified by the CO. See Special 418-A for more information.
4. Match the existing striping unless otherwise noted. See the Tabulation of Quantities for more information.
5. Install Object Markers and Delineator, Type Snow Poles as shown in the plans and according to Special 633-A.

NORTH ENTRANCE ROAD
588+00 to 600+00

c:\pw_work_cfl\dms14320\PLN\(GRCA)FTNP.dgn (NORTH ENTRANCE ROAD 23)
8 June 2026 4:01 PM
© 2026 Microsoft Corporation © 2026 Maxar ©CNES (2026) Distribution Airbus DS © Mapbox

GRCA PMIS NO.: 192082

STATE	PROJECT	SHEET NUMBER
AZ	NP GRCA 14(2)	D.24

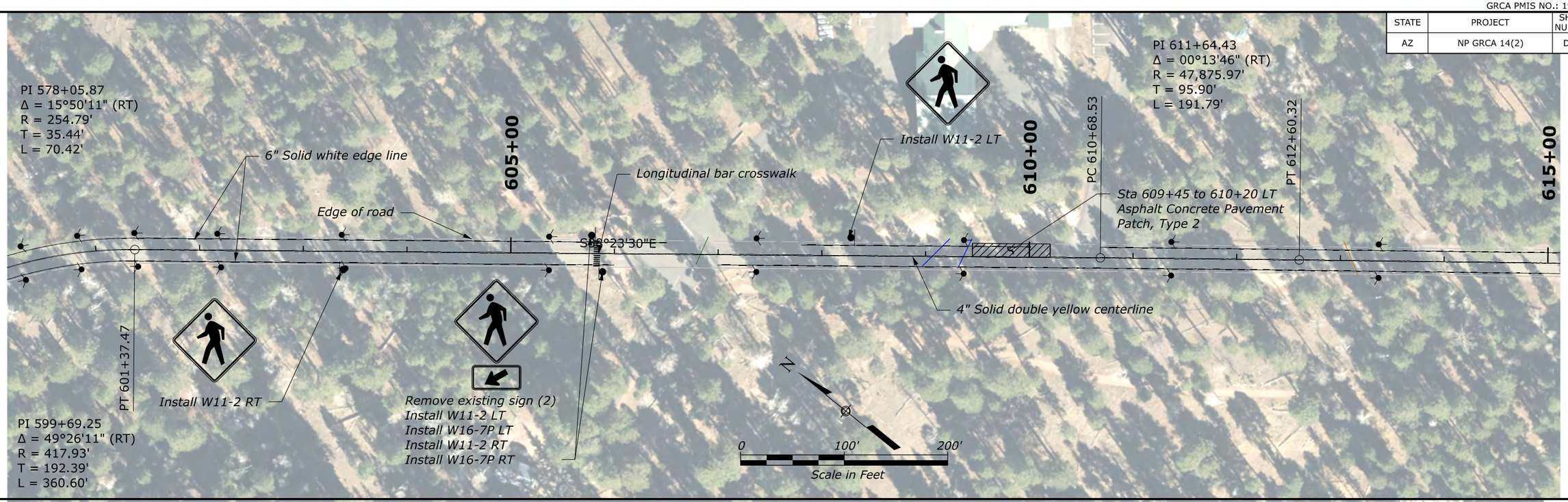

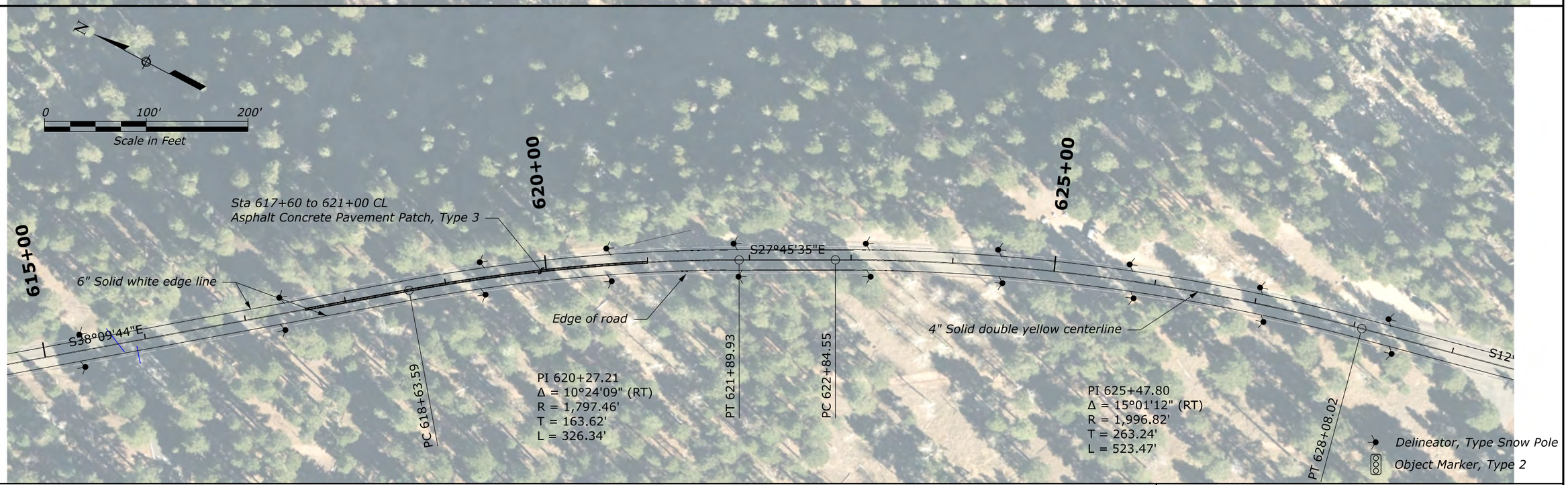

NOTE:

1. The horizontal alignment and the location of the existing and proposed features are not based on precise survey data. Adjust as necessary to fit field conditions.
2. Some features in the drawing are not drawn to scale and identify the approximate location of the feature. Final quantities will be determined from field measurements.
3. Construct asphalt concrete pavement patch type as shown in the quantity table or as identified by the CO. See Special 418-A for more information.
4. Match the existing striping unless otherwise noted. See the Tabulation of Quantities for more information.
5. Install Object Markers and Delineator, Type Snow Poles as shown in the plans and according to Special 633-A.

NORTH ENTRANCE ROAD
600+00 to 629+00

c:\pw_work_cfl\dms14320\PLN(GRCA)FTNP.dgn [NORTH ENTRANCE ROAD 24]

8 June 2026 4:01 PM

© 2026 Microsoft Corporation © 2026 Maxar ©CNES (2026) Distribution Airbus DS © Maptox

GRCA PMIS NO.: 192082

STATE	PROJECT	SHEET NUMBER
AZ	NP GRCA 14(2)	D.25

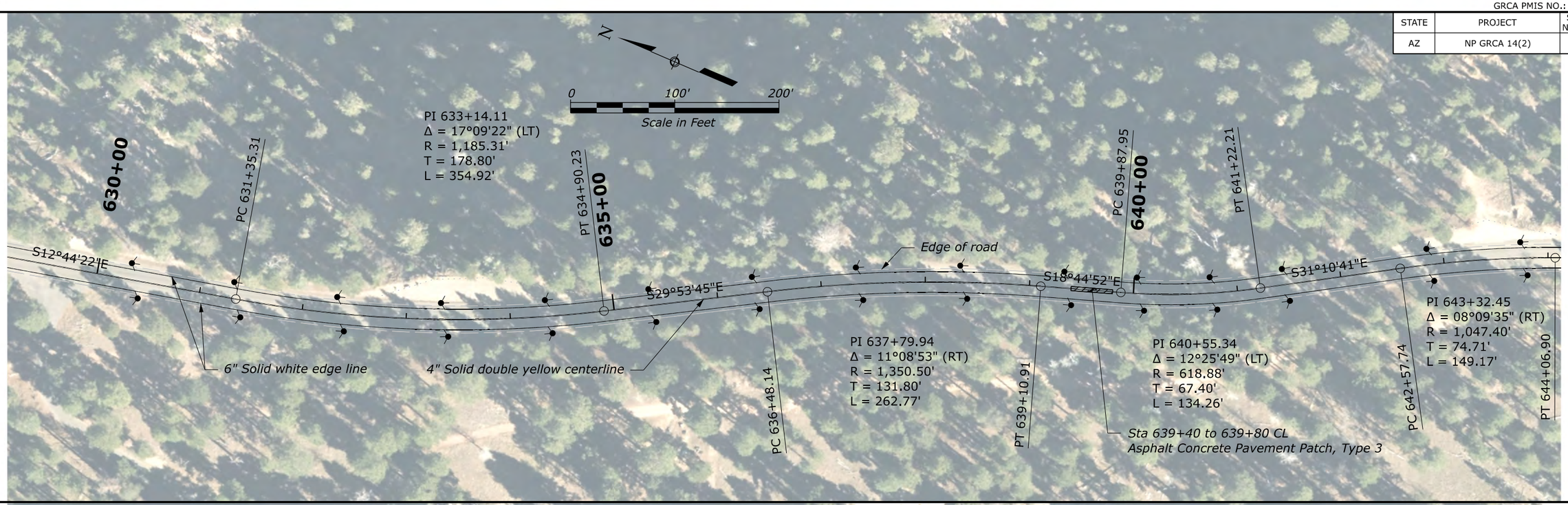

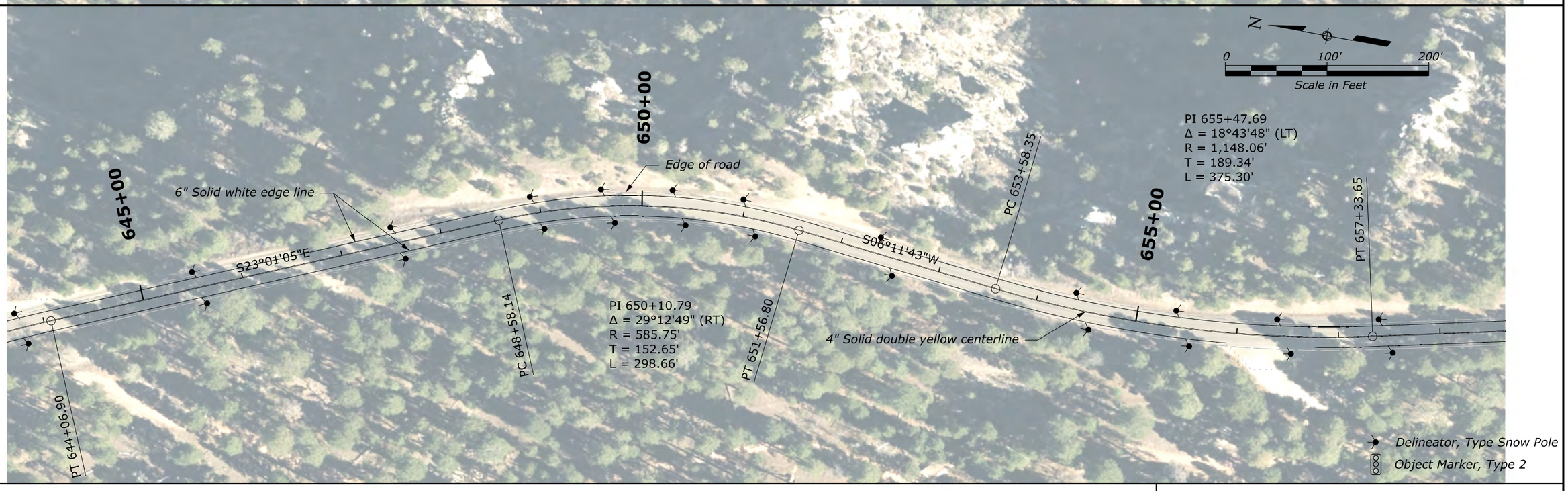

NOTE:

1. *The horizontal alignment and the location of the existing and proposed features are not based on precise survey data. Adjust as necessary to fit field conditions.*
2. *Some features in the drawing are not drawn to scale and identify the approximate location of the feature. Final quantities will be determined from field measurements.*
3. *Construct asphalt concrete pavement patch type as shown in the quantity table or as identified by the CO. See Special 418-A for more information.*
4. *Match the existing striping unless otherwise noted. See the Tabulation of Quantities for more information.*
5. *Install Object Markers and Delineator, Type Snow Poles as shown in the plans and according to Special 633-A.*

NORTH ENTRANCE ROAD
629+00 to 658+00

c:\pw_work_cfldms\14320\PLN(GRCA)FTNP.dgn [NORTH ENTRANCE ROAD 25]

8 June 2026 4:01 PM

© 2026 Microsoft Corporation © 2026 Maxar ©CNES (2026) Distribution Airbus DS © Mapbox

GRCA PMIS NO.: 192082

STATE	PROJECT	SHEET NUMBER
AZ	NP GRCA 14(2)	D.26

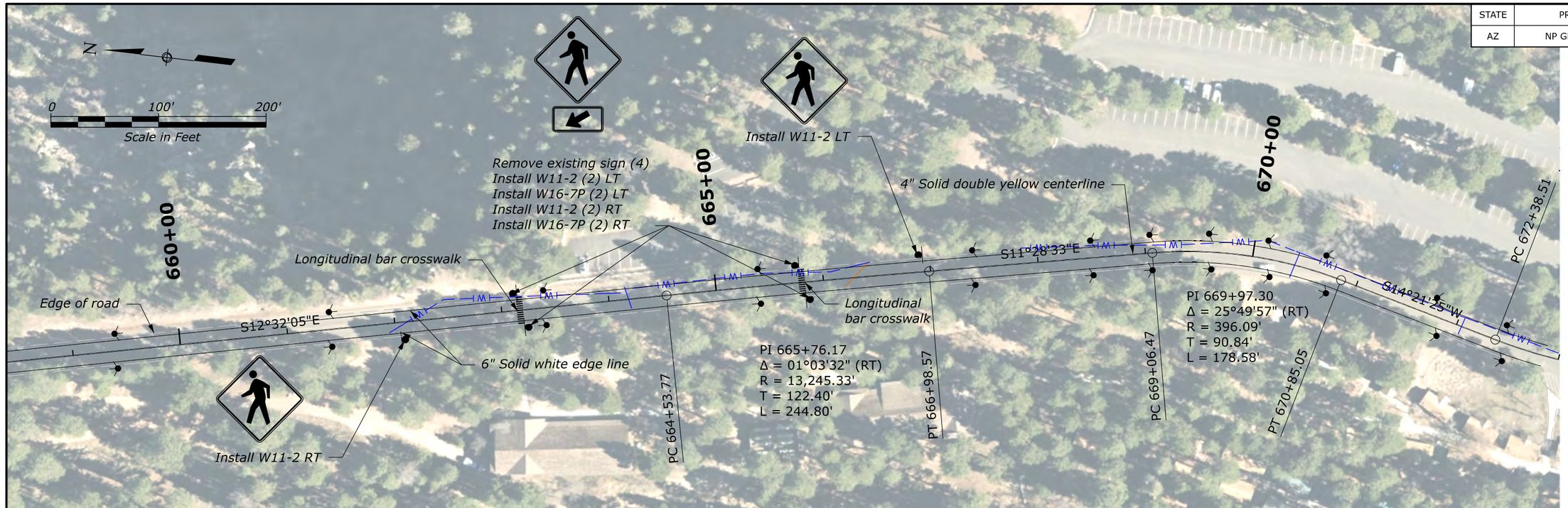

NOTE:

1. The horizontal alignment and the location of the existing and proposed features are not based on precise survey data. Adjust as necessary to fit field conditions.
2. Some features in the drawing are not drawn to scale and identify the approximate location of the feature. Final quantities will be determined from field measurements.
3. Construct asphalt concrete pavement patch type as shown in the quantity table or as identified by the CO. See Special 418-A for more information.
4. Match the existing striping unless otherwise noted. See the Tabulation of Quantities for more information.
5. Install Object Markers and Delineator, Type Snow Poles as shown in the plans and according to Special 633-A.

NORTH ENTRANCE ROAD
658+00 to 673+00

c:\pw_work_cfl\dms14320\PLN\GRCA\FTNP.dgn [NORTH ENTRANCE ROAD 26]

8 June 2026 4:01 PM

© 2026 Microsoft Corporation © 2026 Maxar ©CNES (2026) Distribution Airbus DS © Mapbox

GRCA PMIS NO.: 192082

PROJECT	SHEET NUMBER
AZ NP GRCA 14(2)	D.27

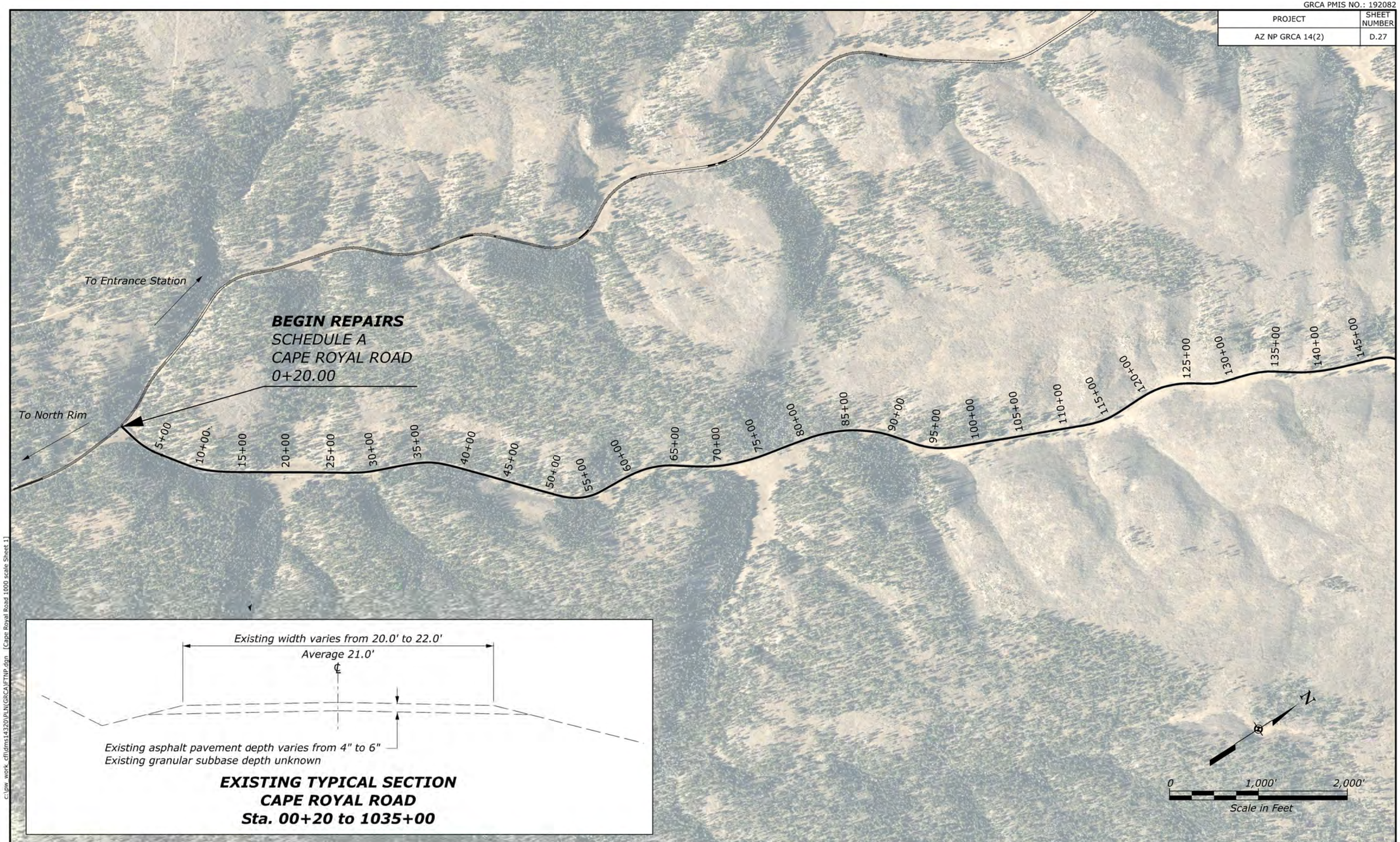

NOTE:

1. The horizontal alignment and the location of the existing and proposed features are not based on precise survey data. Adjust as necessary to fit field conditions.
2. Some features in the drawing are not drawn to scale and identify the approximate location of the feature. Final quantities will be determined from field measurements.
3. Construct asphalt concrete pavement patch type as shown in the surfacing summary or as identified by the CO. See Special 418-A for more information.
4. Match the existing striping unless otherwise noted. See Detail C634-50 and Tabulation of Quantities for more information.

CAPE ROYAL ROAD REPAIRS
0+20.00 to 145+00

c:\pw_work_cfl\dms14320\PLN(GRCA)FTNP.dgn [Cape Royal Road 1000 scale Sheet 1]

8 June 2026 4:01 PM

© 2026 Microsoft Corporation | Earthstar Geographics SIO © Maptiles

GRCA PMIS NO.: 192082

PROJECT	SHEET NUMBER
AZ NP GRCA 14(2)	D.28

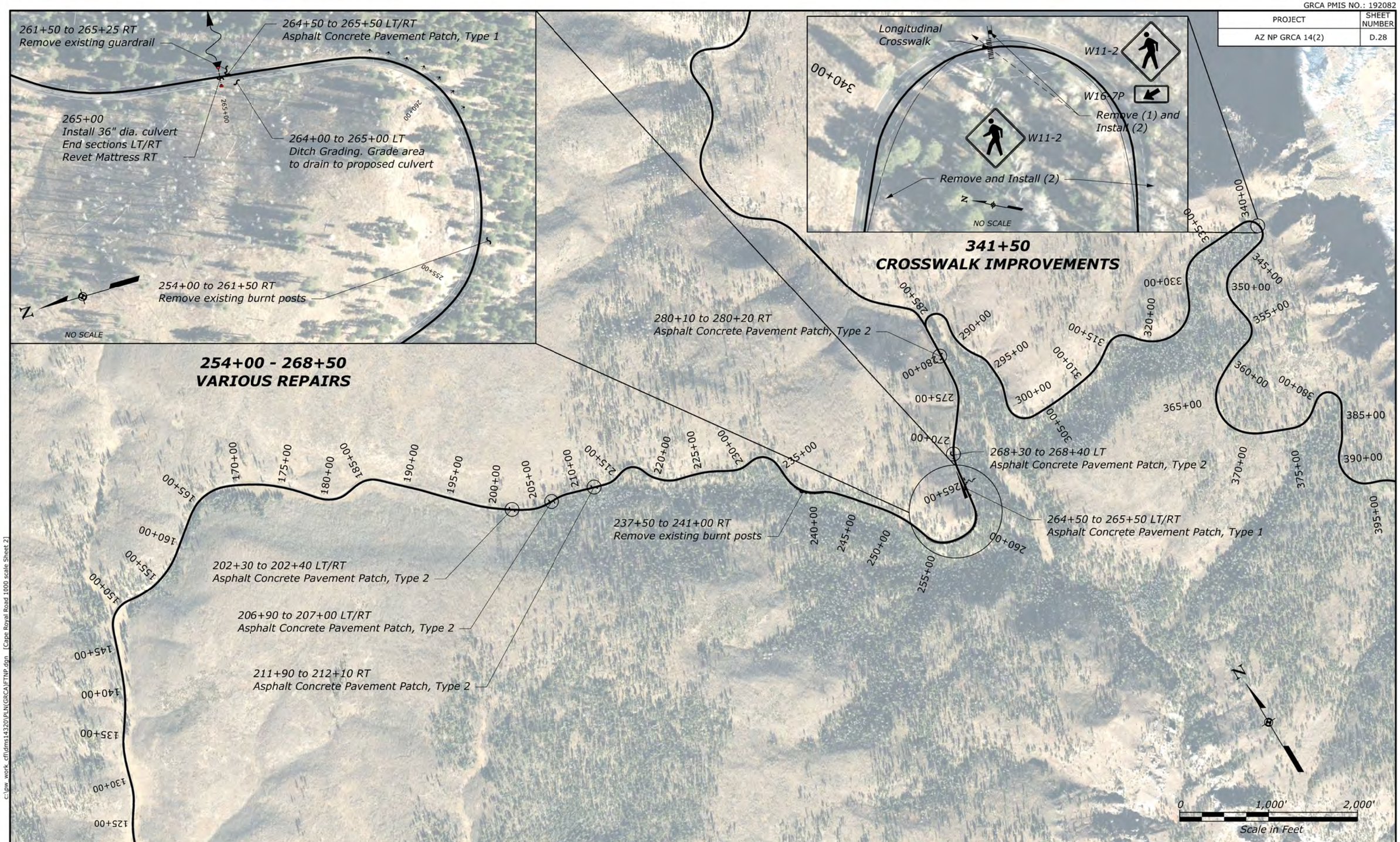

NOTE:

1. The horizontal alignment and the location of the existing and proposed features are not based on precise survey data. Adjust as necessary to fit field conditions.
2. Some features in the drawing are not drawn to scale and identify the approximate location of the feature. Final quantities will be determined from field measurements.
3. Construct asphalt concrete pavement patch type as shown in the surfacing summary or as identified by the CO. See Special 418-A for more information.
4. Match the existing striping unless otherwise noted. See Detail C634-50 and Tabulation of Quantities for more information.

CAPE ROYAL ROAD REPAIRS
145+00 to 395+00

c:\pw_work\cfl\dms14320\PLN\GRCA\FTNP.dgn [Cape Royal Road 1000 scale Sheet 2]

8 June 2026 4:59 PM

© 2026 Microsoft Corporation © 2026 Maxar ©CNES (2026) Distribution Airbus DS Earthstar Geographics SIO © OpenStreetMap

GRCA PMIS NO.: 192082

PROJECT	SHEET NUMBER
AZ NP GRCA 14(2)	D.29

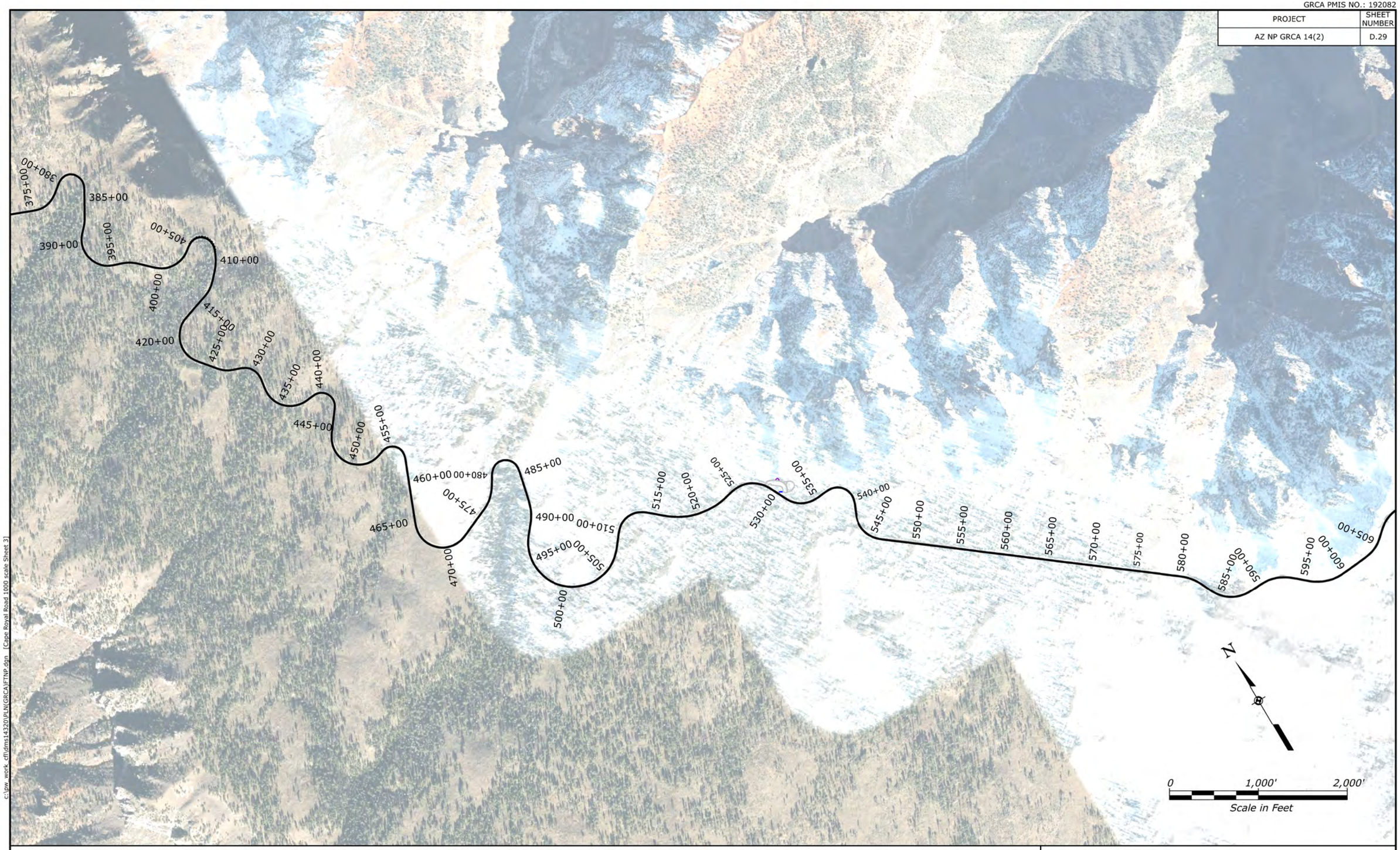

NOTE:

1. *The horizontal alignment and the location of the existing and proposed features are not based on precise survey data. Adjust as necessary to fit field conditions.*
2. *Some features in the drawing are not drawn to scale and identify the approximate location of the feature. Final quantities will be determined from field measurements.*
3. *Construct asphalt concrete pavement patch type as shown in the surfacing summary or as identified by the CO. See Special 418-A for more information.*
4. *Match the existing striping unless otherwise noted. See Detail C634-50 and Tabulation of Quantities for more information.*

CAPE ROYAL ROAD REPAIRS
395+00 to 605+00

c:\pw_work cfl\dms14320\PLN(GRCA)FTNP.dgn [Cape Royal Road 1000 scale Sheet 3]

1 June 2026 4:49 PM

(C) 2026 Microsoft Corporation | Maxar | Geonames, Inc.

GRCA PMIS NO.: 192082

PROJECT	SHEET NUMBER
AZ NP GRCA 14(2)	D.30

NOTE:

1. *The horizontal alignment and the location of the existing and proposed features are not based on precise survey data. Adjust as necessary to fit field conditions.*
2. *Some features in the drawing are not drawn to scale and identify the approximate location of the feature. Final quantities will be determined from field measurements.*
3. *Construct asphalt concrete pavement patch type as shown in the surfacing summary or as identified by the CO. See Special 418-A for more information.*
4. *Match the existing striping unless otherwise noted. See Detail C634-50 and Tabulation of Quantities for more information.*

CAPE ROYAL ROAD REPAIRS
605+00 to 770+00

c:\pw_work_cfl\dms14320\PLN(GRCA)FTNP.dgn [Cape Royal Road 1000 scale Sheet 4]

1 June 2026 4:47 PM

© 2026 Microsoft Corporation | Earth's Earth Geographics SIO

GRCA PMIS NO.: 192082

PROJECT	SHEET NUMBER
AZ NP GRCA 14(2)	D.31

NOTE:

1. *The horizontal alignment and the location of the existing and proposed features are not based on precise survey data. Adjust as necessary to fit field conditions.*
2. *Some features in the drawing are not drawn to scale and identify the approximate location of the feature. Final quantities will be determined from field measurements.*
3. *Construct asphalt concrete pavement patch type as shown in the surfacing summary or as identified by the CO. See Special 418-A for more information.*
4. *Match the existing striping unless otherwise noted. See Detail C634-50 and Tabulation of Quantities for more information.*

CAPE ROYAL ROAD REPAIRS
770+00 to 925+00

c:\pw_work, cfl\dms14320\PLN(GRCA)FTNP.dgn [Cape Royal Road 1000 scale Sheet 5]

1 June 2026 4:49 PM

© 2026 Microsoft Corporation | Earthstar Geographics SIO

GRCA PMIS NO.: 192082

PROJECT	SHEET NUMBER
AZ NP GRCA 14(2)	D.32

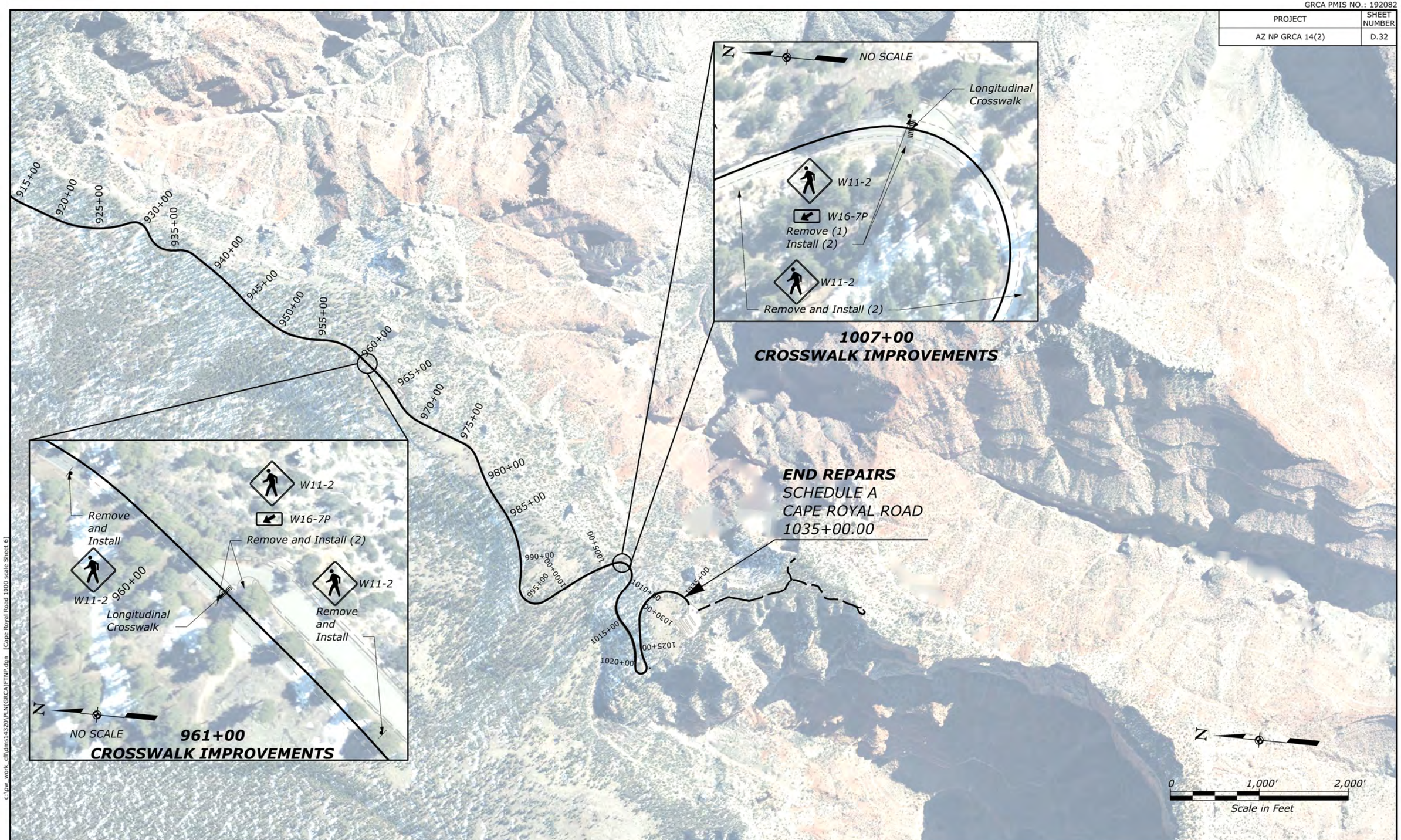

NOTE:

1. The horizontal alignment and the location of the existing and proposed features are not based on precise survey data. Adjust as necessary to fit field conditions.
2. Some features in the drawing are not drawn to scale and identify the approximate location of the feature. Final quantities will be determined from field measurements.
3. Construct asphalt concrete pavement patch type as shown in the surfacing summary or as identified by the CO. See Special 418-A for more information.
4. Match the existing striping unless otherwise noted. See Detail C634-50 and Tabulation of Quantities for more information.

CAPE ROYAL ROAD REPAIRS
925+00 to 1035+00.00

c:\pw_work\cfl\dms14320\PLN\GRCA\FTNP.dgn [Cape Royal Road 1000 scale Sheet 6]

1 June 2026 4:51 PM

© 2026 Microsoft Corporation © 2026 Maxar ©CNES (2026) Distribution Airbus DS Earthstar Geographics SIO

GRCA PMIS NO.: 192082

PROJECT	SHEET NUMBER
AZ NP GRCA 14(2)	D.33

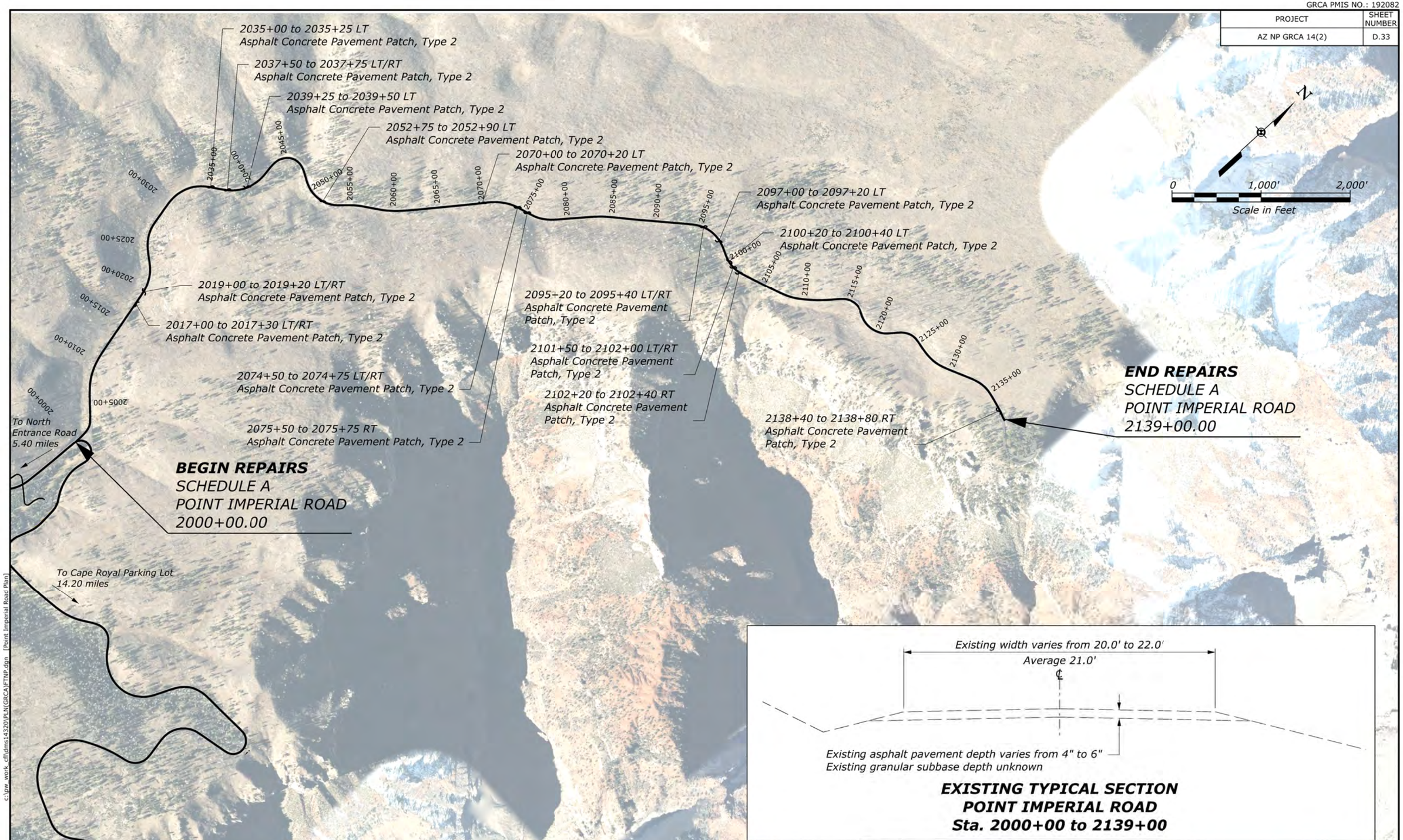

c:\pw_work\cfl\dms14320\PLN(GRCA)FTNP.dgn [Point Imperial Road Plan]

1 June 2026 4:53 PM

NOTE:

1. The horizontal alignment and the location of the existing and proposed features are not based on precise survey data. Adjust as necessary to fit field conditions.
2. Some features in the drawing are not drawn to scale and identify the approximate location of the feature. Final quantities will be determined from field measurements.
3. Construct asphalt concrete pavement patch type 2 as identified by the CO. See Special 418-A for more information.
4. Match the existing striping unless otherwise noted. See Detail C634-50 and Tabulation of Quantities for more information.

POINT IMPERIAL ROAD REPAIRS
2000+00.00 to 2139+00.00

(C) 2026 Microsoft Corporation | Karta | Geographics, Inc.

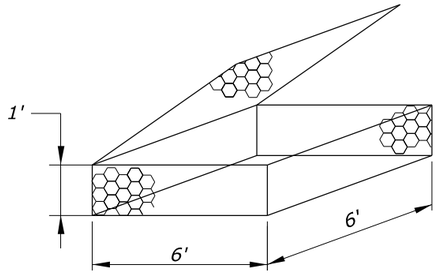

Size varies among manufacturers

6' x 6'
REVET MATTRESS DETAIL

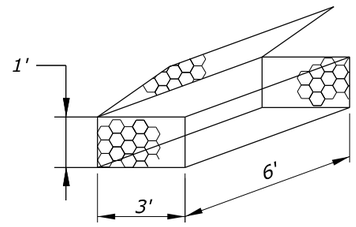

Size varies among manufacturers

3' x 6'
REVET MATTRESS DETAIL

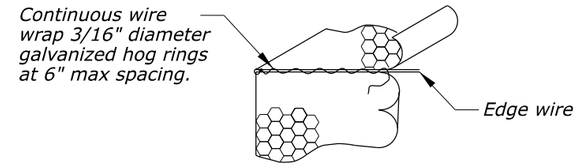

REVET MATTRESS DETAIL
EDGE OF TOP TIE DETAIL

ANCHOR STAKE NOTES:

1. Do not measure anchor stakes. Use anchor stakes that are 2" dia. x 4' galvanized pipe, or 2-1/2" x 2-1/2"x 1/4" x 4' galvanized steel angle iron.

REVET MATTRESS NOTES:

1. Excavation for placement of revet (gabion) mattress will not be measured for payment.
2. Tie all revet mattresses together.Combination of different revet mattress sizes may be used as approved by the CO. Fabricate revet mattresses from either welded wire mesh or twisted wire mesh. Conform to the following:

   (a) Welded wire Mesh ASTM A974
   (b) Twisted wire mesh ASTM A975

3. Revet Mattress Rock. Provide angular stone from a rock quarry or cut that is hard, durable, free of organic and other unsuitable material, and resistant to weather and water action. Do not use crushed river rock or rock with rounded surfaces. Conform to the following:

   (a) Durabilty Index (coarse), AASHTO T 210 — 50 min.
   (b) Density of a filled basket — 100 lb/cuft
   (c) Los Angeles abraision, AASHTO T 96 — 50% Maximum
   (d) Gradation. Provide rock with breadth and thickness at least one-third its length
      (1) Baskets less than 1 foot in vertical dimension.
         (a) Maximum Dimension — 6 inches
         (b) Minimum Dimension — 3 inches

   Provide and place a separation geotextile conforming to AASTHO M 288 Table 1, Class 1 and Table 3. Separation geotextiles can be in the ≥50 percent elongation (non woven) category.

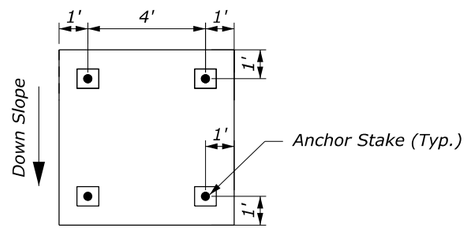

SINGLE REVET MATTRESS
ANCHOR STAKE LAYOUT

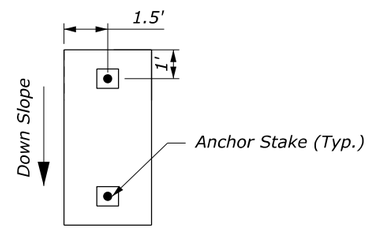

3' x 6' REVET MATTRESS
ANCHOR STAKE LAYOUT

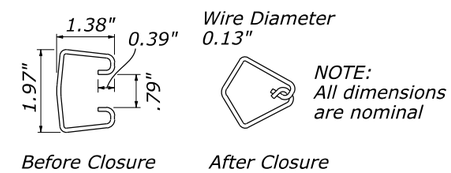

INTERLOCKING
WIRE FASTENER

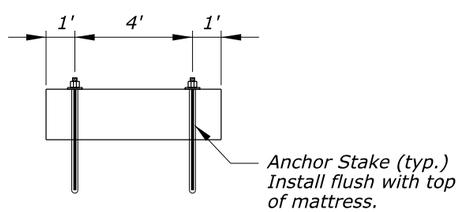

PROFILE VIEW
END 6' x 6' REVET MATTRESS

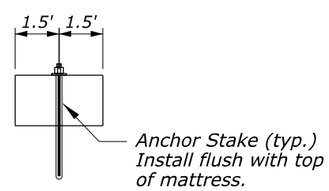

PROFILE VIEW
END 3' X 6' REVET MATTRESS

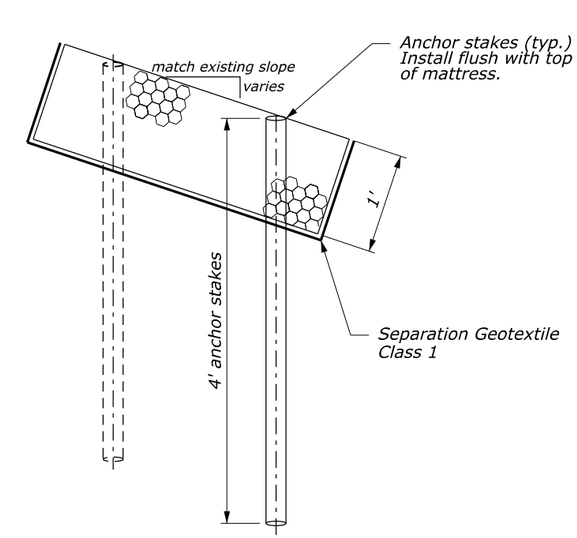

REVET ANCHOR STAKE DETAIL

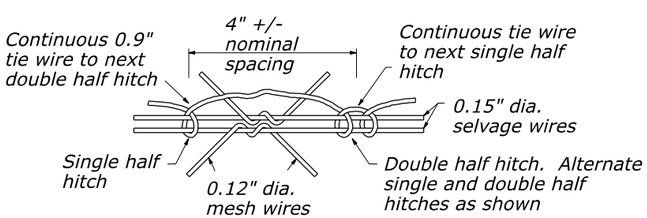

HALF HITCH TYING DETAIL
(Twisted wire mesh)

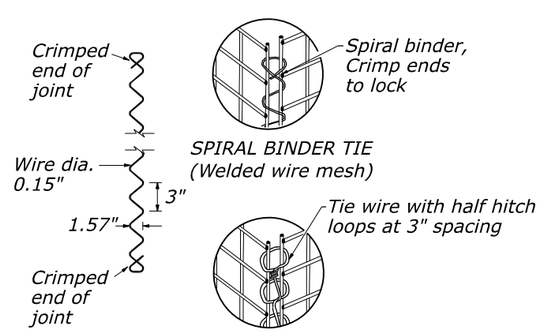

HALF HITCH TYING DETAIL
(Welded wire mesh)

NO SCALE

SPECIAL
253-A

REVET MATTRESS
Sheet 1 of 2

24 June 2026 12:52 PM c:\pw_work_cflwdms14312\sp253-A_Revett Mattress.dgn [sheet 1]

PROJECT	SHEET NUMBER
AZ NP GRCA 14(2)	I.2

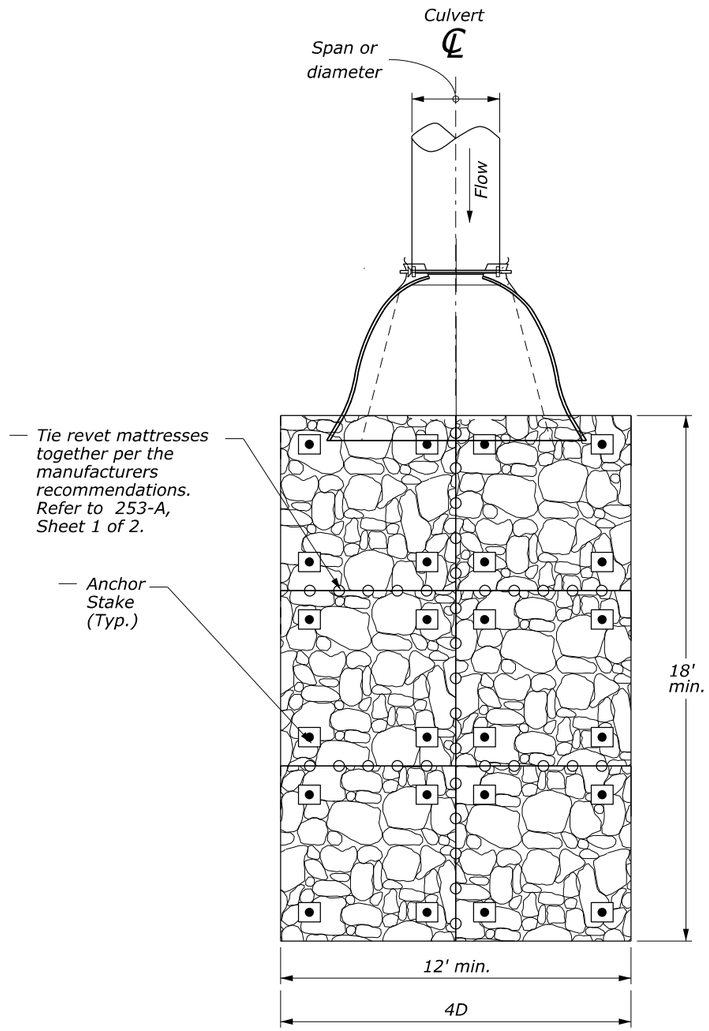

PLAN VIEW
REVET MATTRESS AT CULVERT OUTLET
(6' x 6' basket shown)

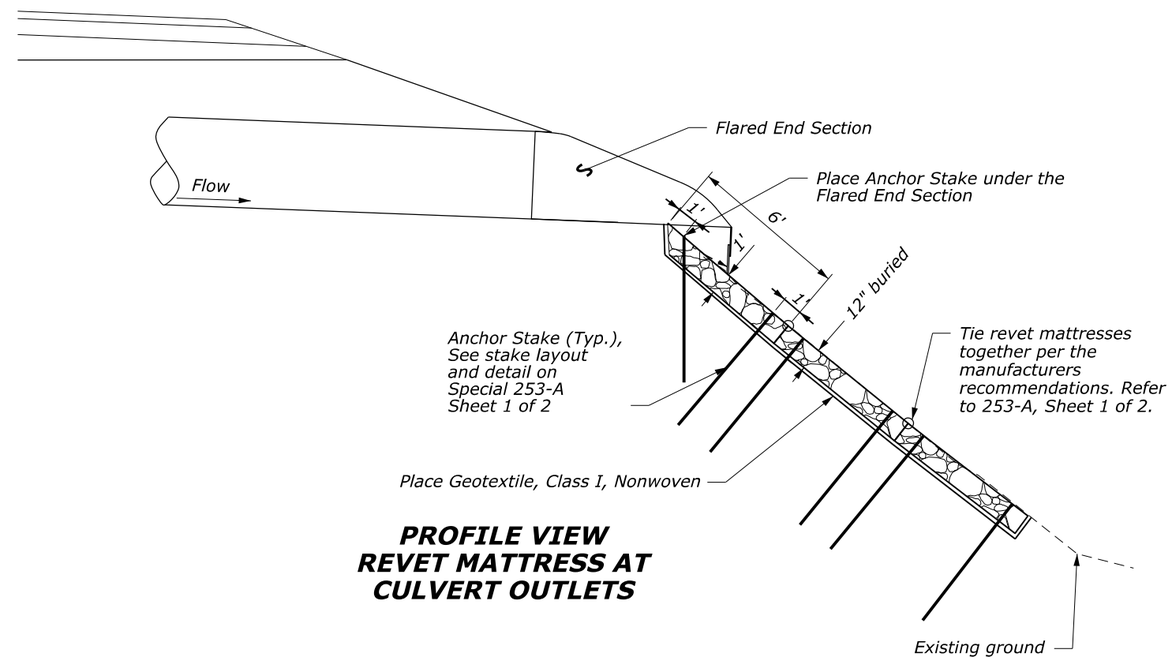

PROFILE VIEW
REVET MATTRESS AT CULVERT OUTLETS

NO SCALE

SPECIAL
253-A

REVET MATTRESS

Sheet 2 of 2

24 June 2026 12:52 PM c:\pw_work_cfl\dms14312\sp253-A_Revett Mattress.dgn [Sheet 2]

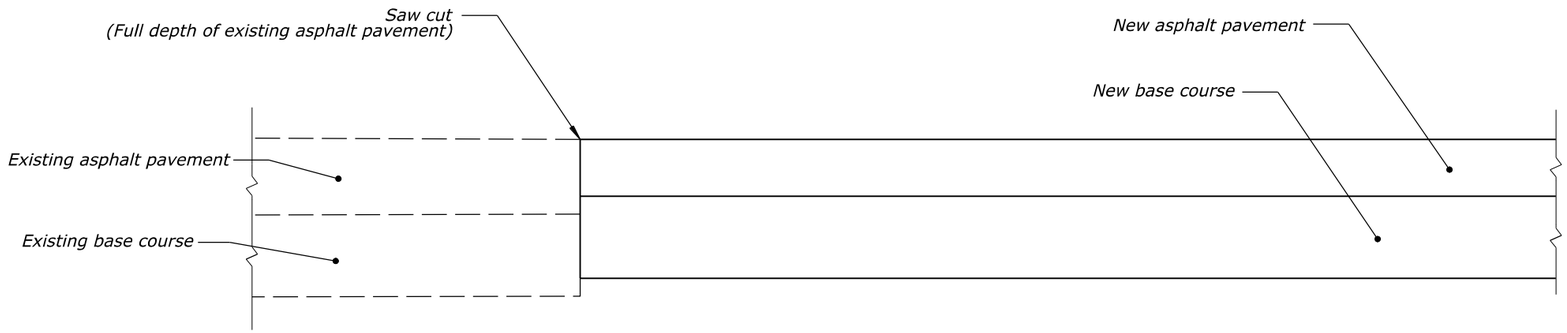

NEW PAVEMENT

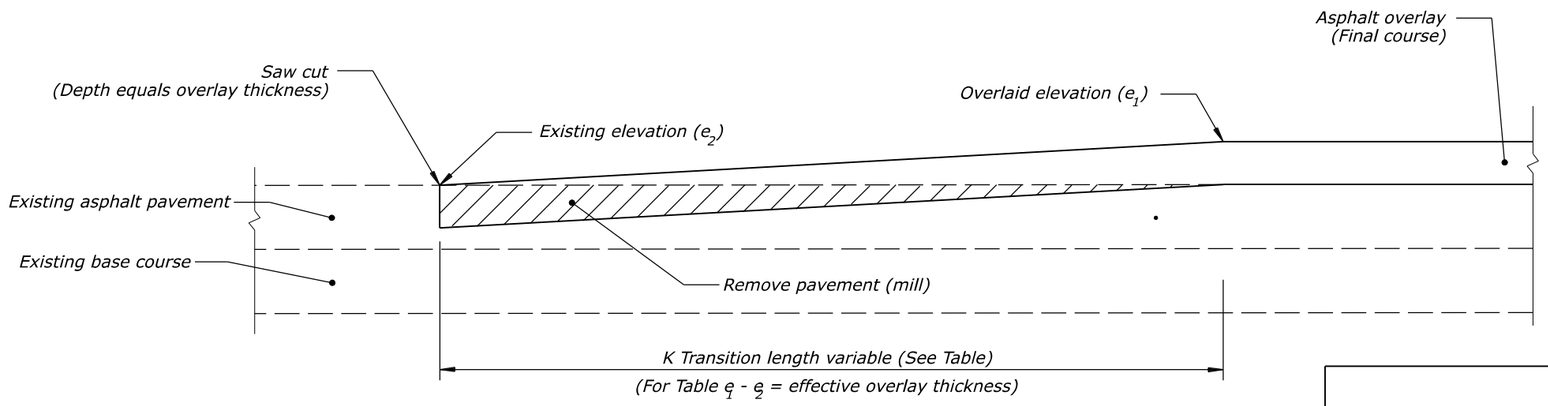

OVERLAY

NOTE:

Provide a transition length in feet that is not less than the value obtained by multiplying the effective overlay thickness in inches (difference between the existing and overlaid elevations) by the K value from the Table for the posted speed of the roadway.

Use $K*[e_1-e_2]=T$, or $K*[d_1-d_2]=T$ (whichever applies), to obtain the transition length. (Minimum transition length=30 feet)

Example :
If the posted speed is 55 MPH
Effective overlay thickness = 2 inches
Then the minimum transition length =
2 inches x 42.5 ft./in. = 85 feet.

K VALUE TABLE (ft/in)

POSTED SPEED (MPH) *	30	35	40	45	50	55	60	65	70	75
K	30	32.5	35	37.5	40	42.5	45	47.5	50	52.5

** Use a K Value of 30 for speeds less than 30 MPH.*

NO SCALE

SPECIAL
401-A

PAVEMENT TRANSITIONS

1 June 2026 12:13 PM c:\pw_work_cfl\dms14315\E401-01.dgn [Sheet]

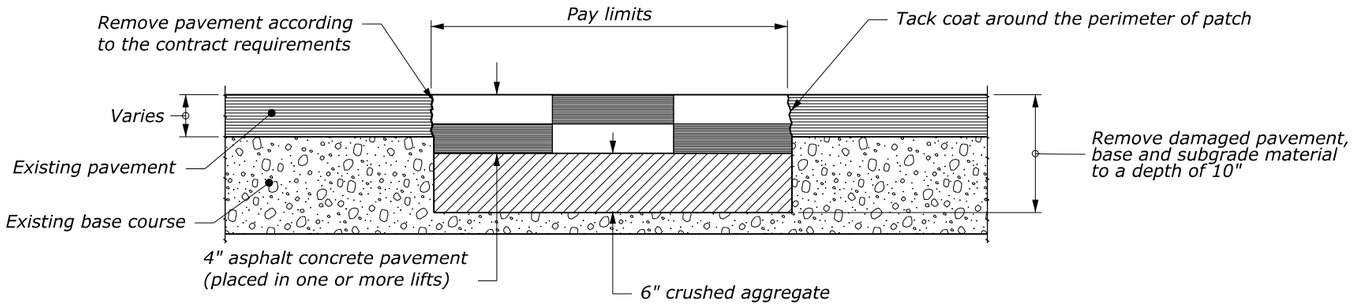

FULL DEPTH PATCH TYPE 1

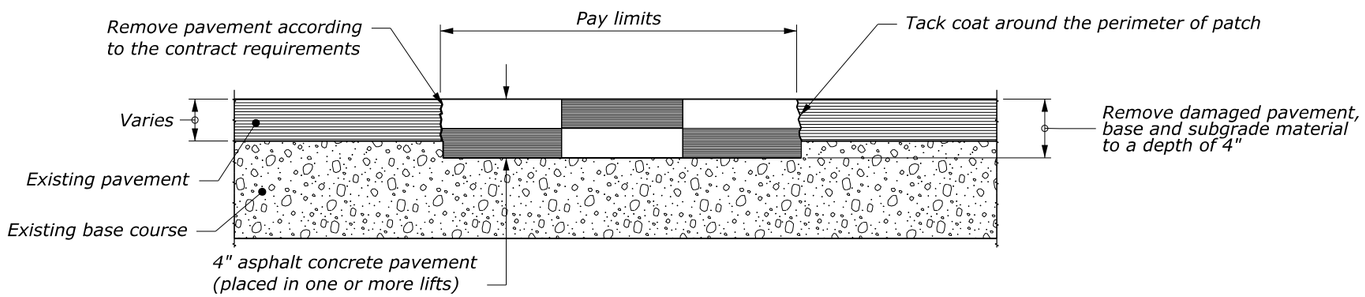

FULL DEPTH PATCH TYPE 2

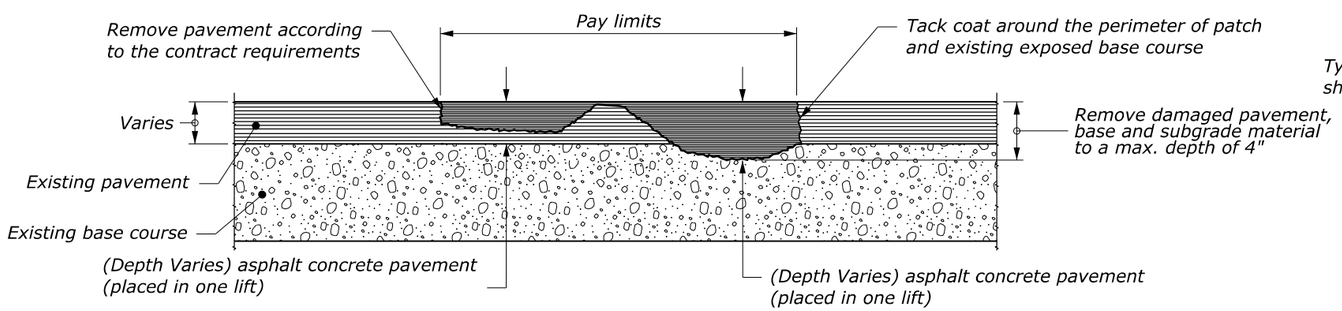

PARTIAL DEPTH PATCH TYPE 3

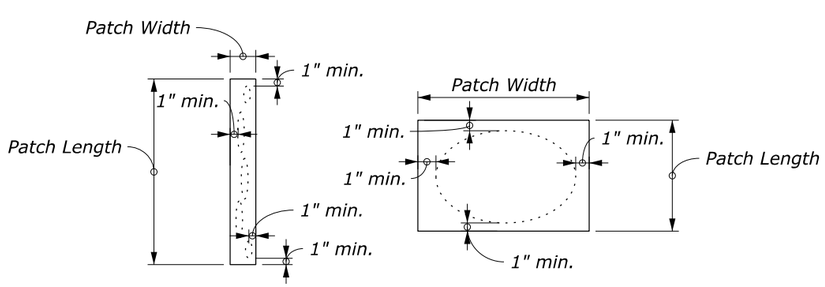

PATCHING TYPE 3 PAY LIMITS - PLAN VIEW

1. Where pop-outs and partial depth patching is tightly grouped, measure the group as a single patch.

NOTE:

1. Extent of patch to be determined by the CO based on conditions encountered at time of construction. Patch type and locations are shown in the summary tables and on the plan sheets. Verify extents of patching with the CO prior to performing.
2. Compact hot asphalt concrete mix to a minimum of 90% of the maximum specific gravity. If hot asphalt concrete pavement is placed in multiple lifts, place a tack coat between lifts.
3. Place a tack coat around the perimeter.
4. All items shown within the pay limits are included in the pay item. See the contract requirements for more information.

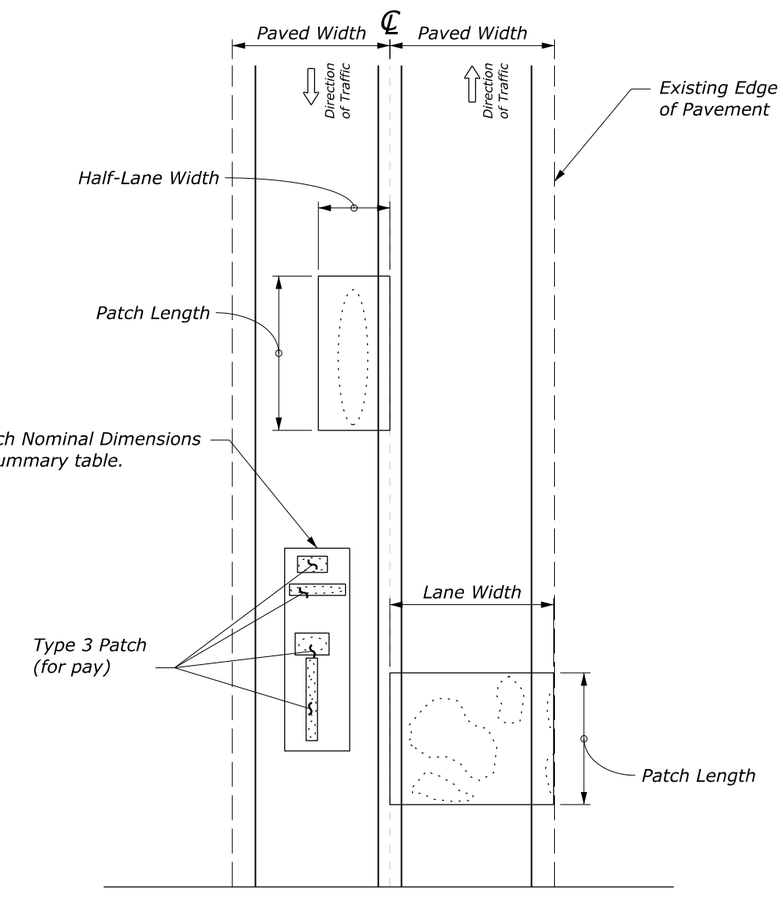

PATCHING TYPE PAY LIMITS - PLAN VIEW

NO SCALE

SPECIAL 418-A

FLEXIBLE PAVEMENT PATCHING

c:\pw_work_cfl\dms14315\sp418-A.dgn [Sp 418-A]
8 June 2026 2:00 PM

PROJECT	SHEET NUMBER
AZ NP GRCA 14(2)	L.1

METAL ROUND PIPE CULVERT

FILL HEIGHT AND METAL THICKNESS TABLE FOR HELICAL LOCKSEAM AND WELDED SEAM PIPE CULVERT

STEEL

PIPE SIZE DIAMETER INCHES	MINIMUM COVER INCHES	2⅔" x ½" CORRUGATIONS					3" x 1" CORRUGATIONS					5" x 1" CORRUGATIONS				
		METAL THICKNESS (INCH/GAGE)														
		0.064/16	0.079/14	0.109/12	0.138/10	0.168/8	0.064/16	0.079/14	0.109/12	0.138/10	0.168/8	0.064/16	0.079/14	0.109/12	0.138/10	0.168/8
		MAXIMUM FILL HEIGHT ABOVE TOP OF PIPE (FEET)														
12	12	100	100	100	100	100										
15	12	100	100	100	100	100										
18	12	100	100	100	100	100										
21	12	100	100	100	100	100										
24	12	100	100	100	100	100										
30	12	85	100	100	100	100										
36	12	71	89	100	100	100	81	100	100	100	100					
42	12	61	76	100	100	100	70	87	100	100	100					
48	12	53	66	93	100	100	61	76	100	100	100	54	68	95	100	100
54	12		59	83	100	100	54	68	95	100	100	48	60	85	100	100
60	12			74	97	100	49	61	86	100	100	43	54	76	98	100
66	12				87	100	44	55	78	100	100	39	49	69	89	100
72	12				80	97	40	51	71	92	100	36	45	63	82	100
78	12					87	37	47	66	85	100	33	42	58	75	92
84	12					75	35	43	61	78	96	31	39	54	70	86
90	12						32	40	57	73	90	29	36	51	65	80
96	12							38	53	69	84		34	48	61	75
102	18							36	50	65	79		32	45	57	71
108	18								47	61	75			42	54	67
114	18								45	58	71			40	52	63
120	18								43	55	67			38	49	60
126	18									52	64				47	57
132	18									50	61				44	54
138	18									48	58				42	52
144	18										56					50

ALUMINUM

PIPE SIZE DIAMETER INCHES	MINIMUM COVER INCHES	2⅔" x ½" CORRUGATIONS					3" x 1" CORRUGATIONS				
		METAL THICKNESS (INCH/GAGE)									
		0.060/16	0.075/14	0.105/12	0.135/10	0.164/8	0.060/16	0.075/14	0.105/12	0.135/10	0.164/8
		MAXIMUM FILL HEIGHT ABOVE TOP OF PIPE (FEET)									
12	12	100	100	100	100	100					
15	12	100	100	100	100	100					
18	12	100	100	100	100	100					
21	12	88	100	100	100	100					
24	12	77	97	100	100	100					
30	12	62	77	100	100	100	71	89	100	100	100
36	12	52	64	90	100	100	59	74	100	100	100
42	12	44	55	77	99	100	51	64	89	100	100
48	12			67	87	100	44	56	78	100	100
54	18			54	71	88	39	50	69	93	100
60	18				57	72	35	45	62	83	98
66	18					58	32	40	56	76	89
72	18					45	30	37	55	70	82
78	24							34	48	64	75
84	24								44	59	70
90	24								41	62	65
96	24								38	51	61
102	24									46	55
108	24									42	50
114	24										45
120	24										40

NOTE:

1. When directed, camber pipe culverts upward from a chord through the inlet and outlet inverts an ordinate amount equal to 1% of the pipe length. Develop camber on a parabolic curve. If the midpoint elevation on the parabolic curve as designed exceeds the elevation of the inlet invert, reduce the amount of camber or increase the pipe culvert gradient.
2. Fill heights exceeding 100 feet require special analysis by the CO.
3. The fill heights in the table are for helical lockseam and welded seam pipe only. Fill heights for culvert pipe with annular corrugations are more restrictive than those of helical lockseam and welded seam pipe. Obtain approval before furnishing annular corrugation pipe.
4. For flexible pavement and aggregate surface roadways, measure minimum cover from the top of the pipe culvert to the bottom of the roadway subgrade. For rigid pavements, measure minimum cover from the top of the pipe culvert to the top of the pavement. For all roadway surface types, measure maximum fill height from the top of the pipe culvert to the top of the pavement.

METAL PIPE ARCH CULVERT

FILL HEIGHT AND METAL THICKNESS TABLE FOR HELICAL LOCKSEAM AND WELDED SEAM PIPE CULVERT

STEEL

PIPE ARCH SIZE SPAN x RISE INCHES	EQUI-VALENT DIAMETER INCHES	MINIMUM CORNER RADIUS INCHES	MINIMUM COVER INCHES	2⅔" x ½" CORRUGATIONS					3" x 1" CORRUGATIONS				5" x 1" CORRUGATIONS			
				METAL THICKNESS (INCH/GAGE)												
				0.064/16	0.079/14	0.109/12	0.138/10	0.168/8	0.079/14	0.109/12	0.138/10	0.168/8	0.079/14	0.109/12	0.138/10	0.168/8
				MAXIMUM FILL HEIGHT ABOVE TOP OF PIPE (FEET)												
17 x 13	15	3	12	13												
21 x 15	18	3	12	12												
24 x 18	21	3	12	13												
28 x 20	24	3	12	13												
35 x 24	30	3	12	12												
42 x 29	36	3.5	12	12												
49 x 33	42	4	12		12											
57 x 38	48	5	12			12										
60 x 46	54	8	15							21				21		
64 x 43	54	6	12			12										
66 x 51	60	9	15							21				21		
71 x 47	60	7	12				12									
73 x 55	66	12	18							20				20		
77 x 52	66	8	12					12								
81 x 59	72	14	18						17				17			
83 x 57	72	9	12					12								
87 x 63	78	14	18						17				17			
95 x 67	84	16	18						17				17			
103 x 71	90	16	18							17			17			
112 x 75	96	18	21							16				16		
117 x 79	102	18	21							16				16		
128 x 83	108	18	24								16				16	
137 x 87	114	18	24								16				16	
142 x 91	120	18	24									16				16

ALUMINUM

PIPE ARCH SIZE SPAN x RISE INCHES	EQUI-VALENT DIAMETER INCHES	MINIMUM CORNER RADIUS INCHES	MINIMUM COVER INCHES	2⅔" x ½" CORRUGATIONS				3" x 1" CORRUGATIONS			
				METAL THICKNESS (INCH/GAGE)							
				0.060/16	0.075/14	0.105/12	0.135/10	0.060/16	0.075/14	0.105/12	0.135/10
				MAXIMUM FILL HEIGHT ABOVE TOP OF PIPE (FEET)							
17 x 13	15	3	12	13							
21 x 15	18	3	12	12							
24 x 18	21	3	12	13							
28 x 20	24	3	12		13						
35 x 24	30	3	12		12						
42 x 29	36	3.5	15			12					
49 x 33	42	4	15			12					
57 x 38	48	5	15				12				
60 x 46	54	8	15					21			
64 x 43	54	6	18				12				
66 x 51	60	9	18					21			
73 x 55	66	12	18						20		
81 x 59	72	14	21							17	
87 x 63	78	14	21							17	
95 x 67	84	16	24							17	
103 x 71	90	16	24								17

NO SCALE

U.S. DEPARTMENT OF TRANSPORTATION, FHWA
OFFICE OF FEDERAL LANDS HIGHWAY

METAL PIPE CULVERT

FLH STANDARD 602-1

SPECIFICATION FP-24, FP-14

APPROVED FOR USE 8/2024

c:\pw_work_cflhdms14737\Std602-1.dgn [Std 602-1]
1 June 2026 12:01 PM

COUPLING BANDS FOR METAL PIPE CULVERT [1]

CORRUGATION SIZE [2] INCHES	ROUND PIPE DIAMETER INCHES	PIPE ARCH SPAN × RISE INCHES	MINIMUM BAND WIDTH (INCHES) ANNULAR CORRUGATED BANDS [3]	HELICALLY CORRUGATED BANDS [4]	SEMI-CORRUGATED BANDS [5]
1½ × ¼	underline [6]	-	10.5	7	10.5
2⅔ × ½	12 to 36	17 × 13 to 42 × 29	7	12	
	42 to 72	49 × 33 to 83 × 57	10.5	12	
	78 to 84	-	10.5	12	10.5
3 × 1	36 to 72	60 × 46 to 81 × 59	12	14	10.5
	78 to 144	87 × 64 to 142 × 91	12	14	10.5
5 × 1	36 to 72	60 × 46 to 81 × 59	20	22	
	78 to 144	87 × 64 to 142 × 91	20	22	

[1] Fabricate annular, helical and semi-corrugated type coupling bands from the same metal as the connecting pipe. Provide coupling bands not more than 3 nominal sheet thicknesses thinner than the thickness of the pipe to be connected, and no thinner than 0.052 inch for steel or 0.048 inch for aluminum. Fasten coupling bands with the following diameter of bolt:
⅜" for 18" round culvert (21" × 15" pipe arch) or less
½" for 21" round culvert (24" × 18" pipe arch) or more

[2] For helically corrugated pipe with rerolled ends, the nominal corrugations size refers to the dimension of the end corrugation in the pipe.

[3] Use annular corrugated bands with pipes having annular corrugations or with helical pipe having rerolled end to form annular corrugations. A 10.5 inch band is acceptable on pipe ends rerolled with 2⅔" × ½" corrugations. A 12 inch band is acceptable on pipe ends rerolled with 3" × 1" pipe corrugations.

[4] Use helical corrugated bands with pipes having helically corrugated ends.

[5] The minimum band widths shown for 3" × 1" and 5" × 1" corrugated sizes apply to 2⅔" × ½" corrugations on rerolled pipe ends.

[6] Smooth sleeve-type couplers and flat bands may be used for pipe diameters of 12" or less. Use a matching metal having a nominal thickness of not less than 0.040 inch for steel, or 0.036 inch for aluminum, or a plastic with an equivalent strength to metal.

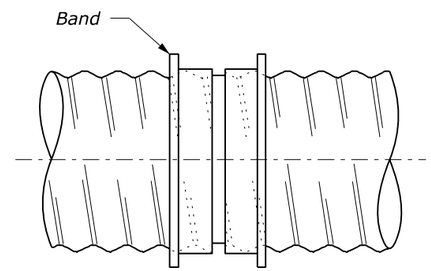

SLEEVE JOINT

Smoother sleeve with center stop.
Stab type joint

SMOOTH SLEEVE BAND

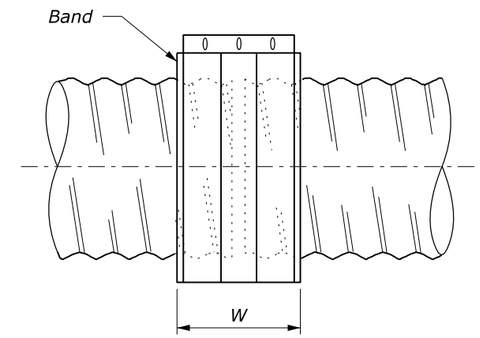

FLAT BAND

NOTE:

1. Other types of coupling bands or fastening devices that comply with the joint performance criteria of AASHTO Standard specifications for Highway Bridges, Division II Section 26 may be used.

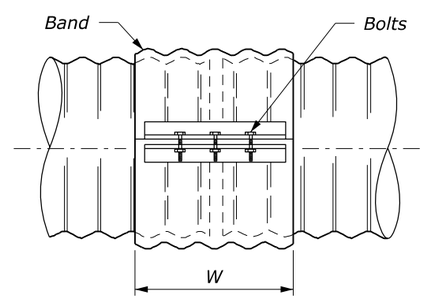

SIDE VIEW

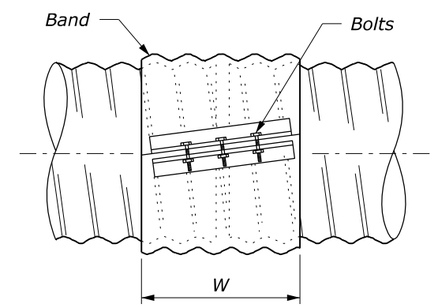

SIDE VIEW

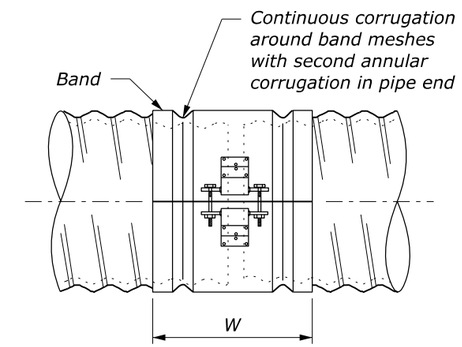

SIDE VIEW

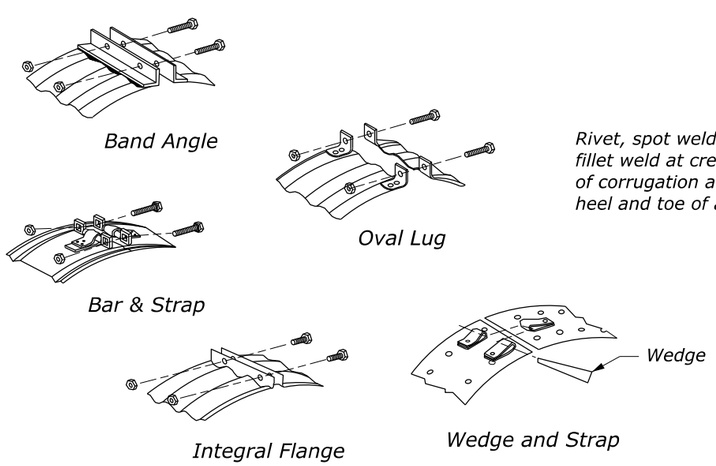

STANDARD BAND CONNECTIONS

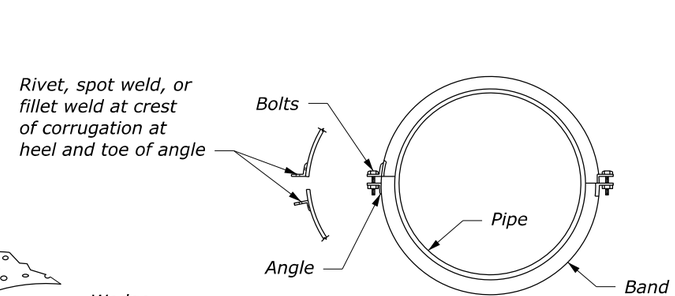

END VIEW

Second angle connection optional to 42" diameter, required above 42" diameter

ANNULAR BAND

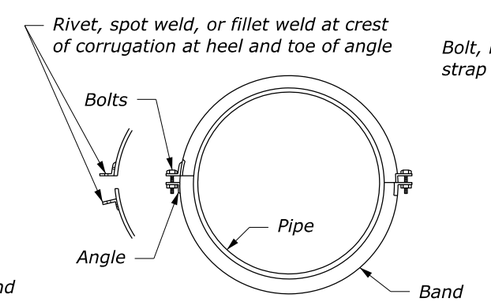

END VIEW

Second angle connection optional to 42" diameter, required above 42" diameter

HELICAL BAND

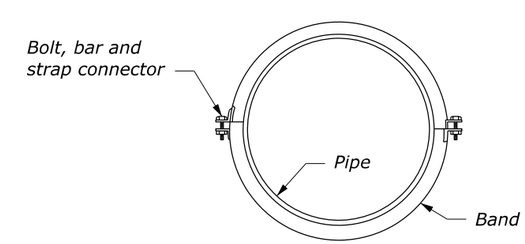

END VIEW

SEMI-CORRUGATED BAND

NO SCALE

U.S. DEPARTMENT OF TRANSPORTATION, FHWA
OFFICE OF FEDERAL LANDS HIGHWAY

METAL PIPE CULVERT COUPLING BAND

FLH STANDARD 602-2

SPECIFICATION FP-24, FP-14

APPROVED FOR USE 1/2024

c:\pw_work_cfl\dms14737\Std602-2.dgn [Std 602-2]
1 June 2026 12:02 PM

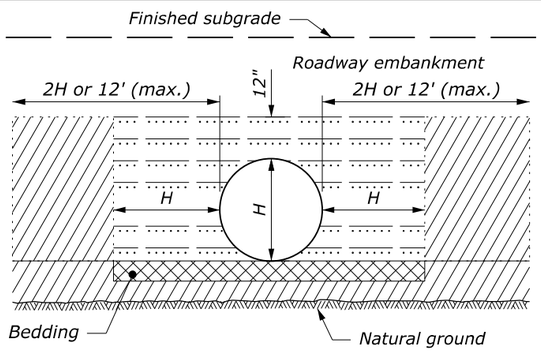

ABOVE NATURAL GROUND

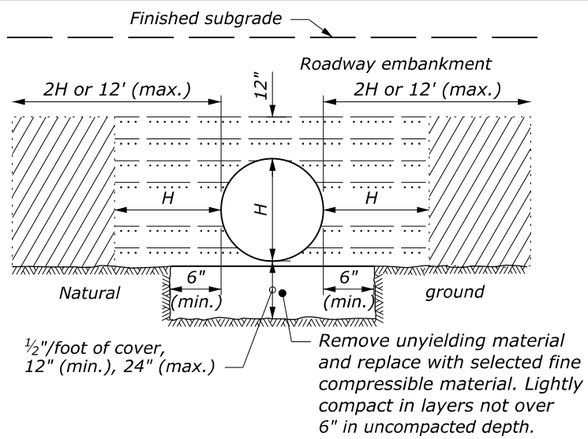

ON UNYIELDING MATERIAL

BEDDING DEPTH	
PIPE SIZE (H)	DEPTH
12" to 54"	4"
> 54"	6"

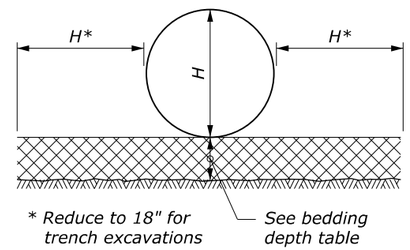

PIPE BEDDING

NOTE:

1. When directed, camber pipe culverts upward from a chord through the inlet and outlet inverts an ordinate amount equal to 1% of the pipe length. Develop camber on a parabolic curve. If the midpoint elevation on the parabolic curve as designed exceeds the elevation of the inlet invert, reduce the amount of camber or increase the pipe culvert gradient.
2. H equals the diameter of all round pipe culverts or the rise dimension of all pipe arch culverts.
3. See Section 704 for bedding and backfill requirements.

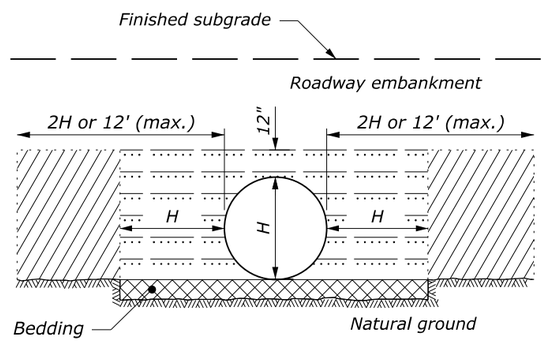

ON NATURAL GROUND

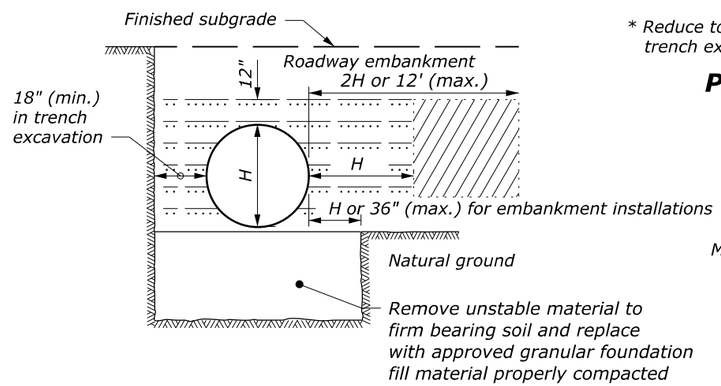

ON UNSTABLE MATERIAL

MINIMUM SPACING	
DIAMETER or SPAN	SPACING
UP to 48"	24"
48" and UP	Half diameter or span or 36", whichever is less

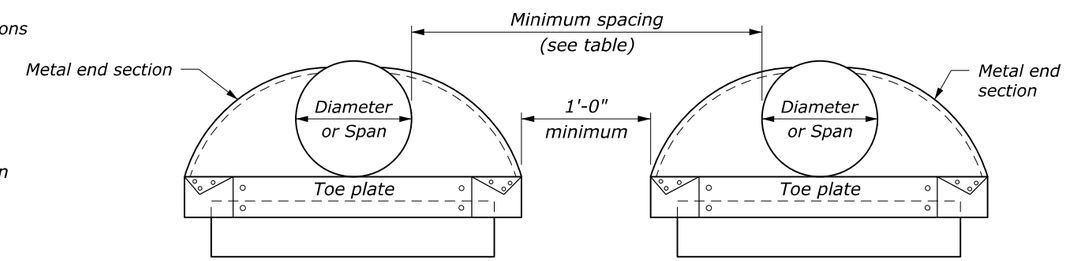

ELEVATION

MULTIPLE PIPE INSTALLATION

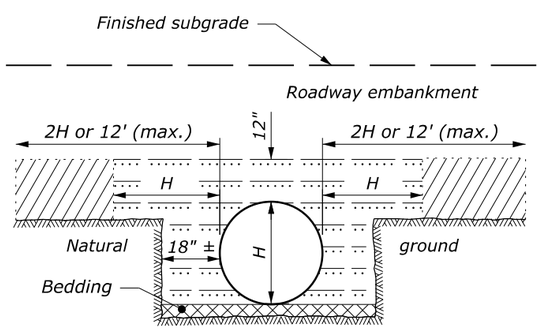

ABOVE AND BELOW NATURAL GROUND

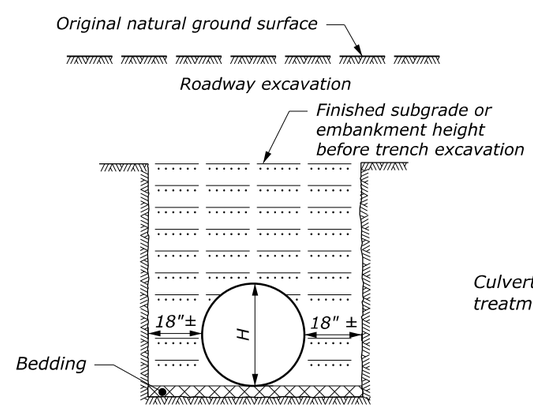

BELOW NATURAL GROUND OR TRENCH EXCAVATION IN EMBANKMENT

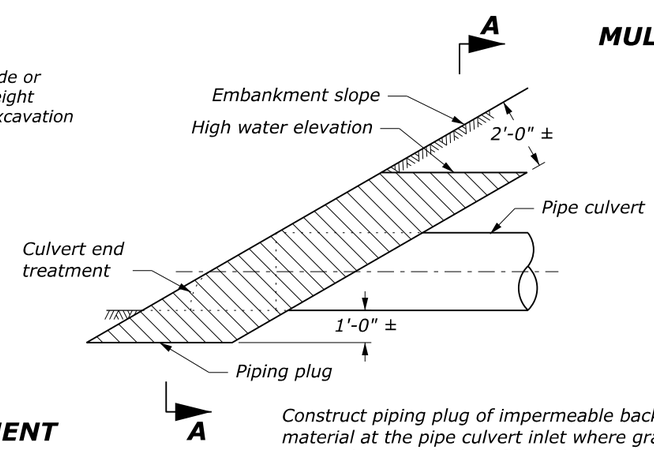

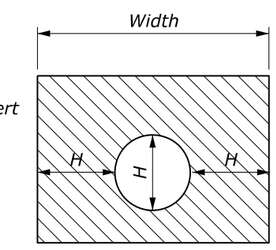

SECTION A-A

Construct piping plug of impermeable backfill material at the pipe culvert inlet where granular material is used for backfill. Width may be adjusted to tie into impervious material.

PIPING PLUG

LEGEND:

- Bedding material (uncompacted)
- Embankment material placed in layers not exceeding 6" compacted depth.
- Compacted backfill material placed in layers not exceeding 6" compacted depth; or flowable backfill according to Section 614.
- Impermeable backfill material.

NO SCALE

U.S. DEPARTMENT OF TRANSPORTATION, FHWA
OFFICE OF FEDERAL LANDS HIGHWAY

METAL AND PLASTIC PIPE CULVERT BEDDING

FLH STANDARD 602-3

SPECIFICATION FP-24

APPROVED FOR USE 1/2024

c:\pw_work_cfl\dms14737\Std602-3.dgn [Std 602-3]
1 June 2026 12:04 PM

END SECTIONS FOR ROUND PIPE CULVERT

PIPE SIZE DIAMETER INCHES	METAL THICKNESS				DIMENSIONS INCHES					SLOPE Approx.
	STEEL		ALUMINUM							
	INCHES	GAGE	INCHES	GAGE	A (min)	B (max)	H (min)	L (±2")	W (max)	
12	0.064	16	0.060	16	5	7	6	21	44	2¼
15	0.064	16	0.060	16	6	8	6	26	52	2¼
18	0.064	16	0.060	16	7	10	6	31	58	2⅛
21	0.064	16	0.060	16	8	12	6	36	66	2⅛
24	0.064	16	0.060	16	9	13	6	41	72	2⅛
30	0.079	14	0.075	14	11	16	8	51	88	2⅛
36	0.079	14	0.075	14	13	19	9	60	105	2
42	0.109	12	0.105	12	15	25	10	69	122	2⅛
48	0.109	12	0.105	12	17	29	12	78	131	2
54	0.109	12	0.105	12	17	33	12	84	143	2
60	0.109	12	0.105	12	17	36	12	87	157	1⅞
66	0.109	12	0.105	12	17	39	12	87	162	1⅝
72	0.109	12	0.105	12	17	44	12	87	169	1½
78	0.109	12	0.105	12	17	48	12	87	178	1⅜
84	0.109	12	0.105	12	17	52	12	87	184	1⅓
90	0.109	12	0.105	12	17	58	12	87	188	1¼
96	0.109	12	0.105	12	17	58	12	87	197	1⅛

END SECTIONS FOR PIPE ARCH CULVERT

PIPE SIZE SPAN × RISE INCHES	EQUI-VALENT DIAM. (INCHES)	METAL THICKNESS				DIMENSIONS INCHES					SLOPE Approx.
		STEEL		ALUMINUM							
		INCHES	GAGE	INCHES	GAGE	A (min)	B (max)	H (min)	L (±2")	W (max)	
17 × 13	15	0.064	16	0.060	16	7	9	6	19	30	2½
21 × 15	18	0.064	16	0.060	16	7	10	6	23	36	2½
24 × 18	21	0.064	16	0.060	16	8	12	6	28	42	2½
28 × 20	24	0.064	16	0.060	16	9	14	6	32	48	2½
35 × 24	30	0.079	14	0.075	14	10	16	8	39	60	2½
42 × 29	36	0.079	14	0.075	14	12	18	9	46	75	2½
49 × 33	42	0.109	12	0.105	12	13	21	12	53	85	2½
57 × 38	48	0.109	12	0.105	12	18	26	12	63	90	2½
60 × 46	54	0.109	12	0.105	12	18	34	12	70	102	2
64 × 43	54	0.109	12	0.105	12	18	30	12	70	102	2
66 × 51	60	0.109	12	0.105	12	18	33	12	77	116	1½
71 × 47	60	0.109	12	0.105	12	18	33	12	77	114	1½
73 × 55	66	0.109	12	0.105	12	18	36	12	77	126	1½
77 × 52	66	0.109	12	0.105	12	18	36	12	77	126	1½
81 × 59	72	0.109	12	0.105	12	18	39	12	77	138	1½
83 × 57	72	0.109	12	0.105	12	18	39	12	77	138	1½
87 × 63	78	0.109	12	0.105	12	20	38	12	77	148	1½
95 × 67	84	0.109	12	0.105	12	20	34	12	87	162	1½
103 × 71	90	0.109	12	0.105	12	20	38	12	87	174	1½
112 × 75	96	0.109	12	0.105	12	20	40	12	87	174	1½

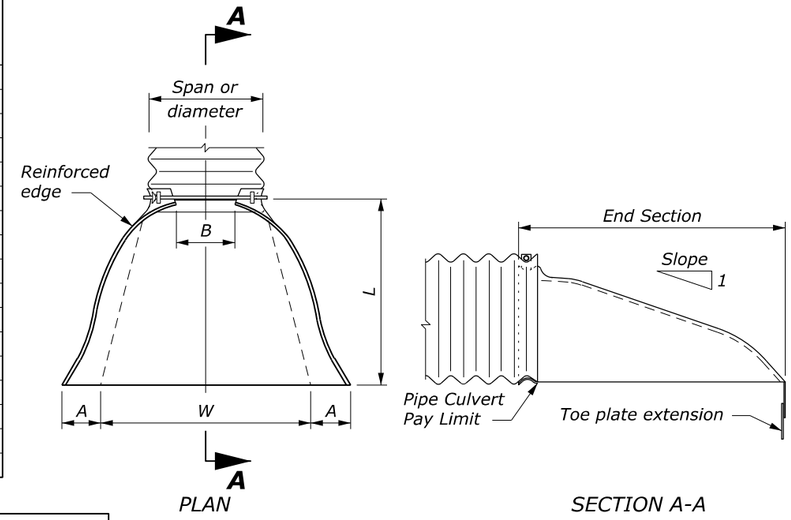

PLAN

SECTION A-A

ROUND OR PIPE ARCH CULVERT

NOTE:

1. Variations in design and dimensions are permitted to allow for manufacturer's standards.
2. Fabricate the diameter of the end section of Design B to match the inside diameter of the concrete pipe culvert.
3. Design C may be used in lieu of design A for all metal pipe culvert sizes. Coupling bands may be any acceptable type for the pipe culvert specified.
4. Fabricate multiple piece bodies with lap seams tightly joined by ⅜" rivets or bolts. Fabricate end section center panels for 60" and larger diameter pipe and equivalent pipe arch from 0.138 inch steel or 0.135 inch aluminum.
5. On end section center panels for 66" and larger equivalent pipe arch provide 2½" × 2½" × ¼" angle reinforcement bolted or riveted under the center panel seam.
6. Supplement the reinforced edges of end sections for 60" and larger diameter pipe and 66" and larger equivalent pipe arch with 2½" × 2½" × ¼" stiffener angles attached with bolts or rivets.
7. Fabricate connector section, corner plate and toe plate extensions from the same metal thickness as the panel body. Use toe plate extension where shown on the plans.
8. Warp embankment slopes to match the slope of the flared end sections.

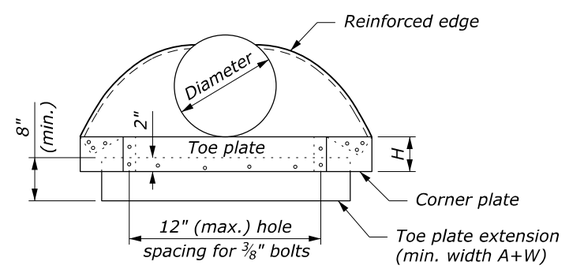

ELEVATION

ROUND PIPE CULVERT

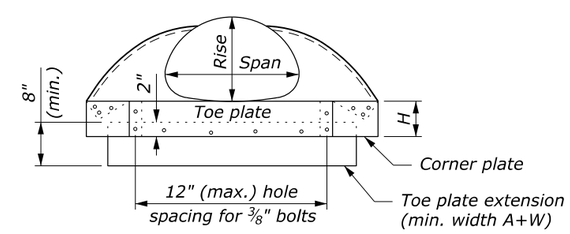

ELEVATION

PIPE ARCH CULVERT

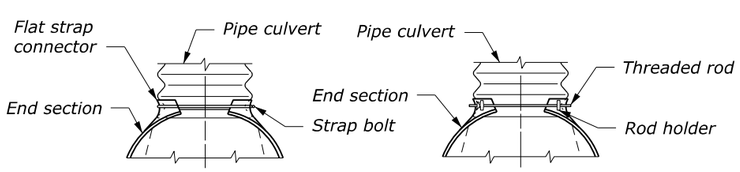

For 12" thru 24" round pipe and 17" × 13" thru 28" × 20" pipe arch

For 30" thru 60" round pipe and 35" × 24" thru 66" × 51" pipe arch

DESIGN A
CONNECTION TO ANNULAR CORRUGATED METAL PIPE

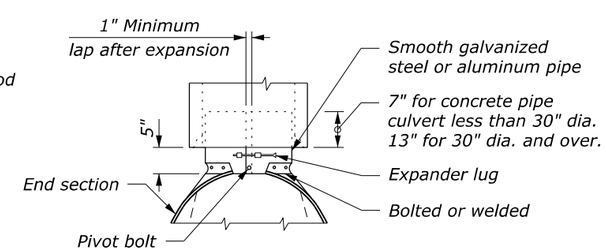

DESIGN B
CONNECTION TO CONCRETE PIPE INLET END

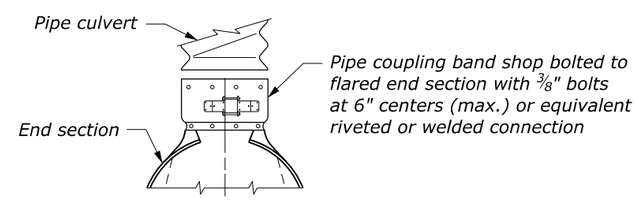

For all sizes of round pipe and pipe arch

DESIGN C
CONNECTION TO METAL PIPE OR OUTLET END OF CONCRETE PIPE

NO SCALE

U.S. DEPARTMENT OF TRANSPORTATION, FHWA OFFICE OF FEDERAL LANDS HIGHWAY	FLH STANDARD 602-4
METAL END SECTIONS	SPECIFICATION FP-24, FP-14
	APPROVED FOR USE 1/2024

c:\pw_work_cflhdms\14737\Std602-4.dgn [Std 602-4]
1 June 2026 12:07 PM

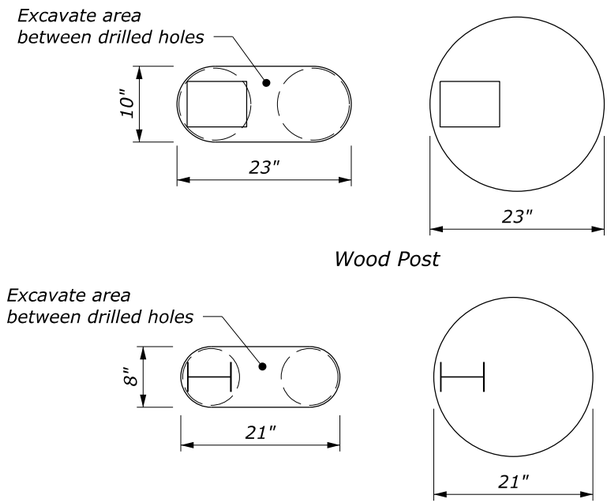

PLAN VIEW

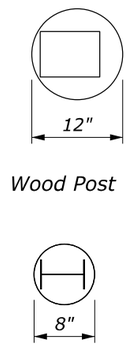

PLAN VIEW

NOTE:

1. Use this detail when posts cannot be embedded to the minimum depth shown on Special 617-D.
2. Unless otherwise specified, use either the circular or the oblong hole configuration for Case 1 conditions.
3. Use crushed coarse aggregate conforming to the contract.
4. Place crushed coarse aggregate according to the post requirements in the contract.
5. Treat field cut galvanized steel post surfaces that expose the base metal with two coats of zinc-oxide paint. Following this, treat the area with a weathering agent according to the contract.

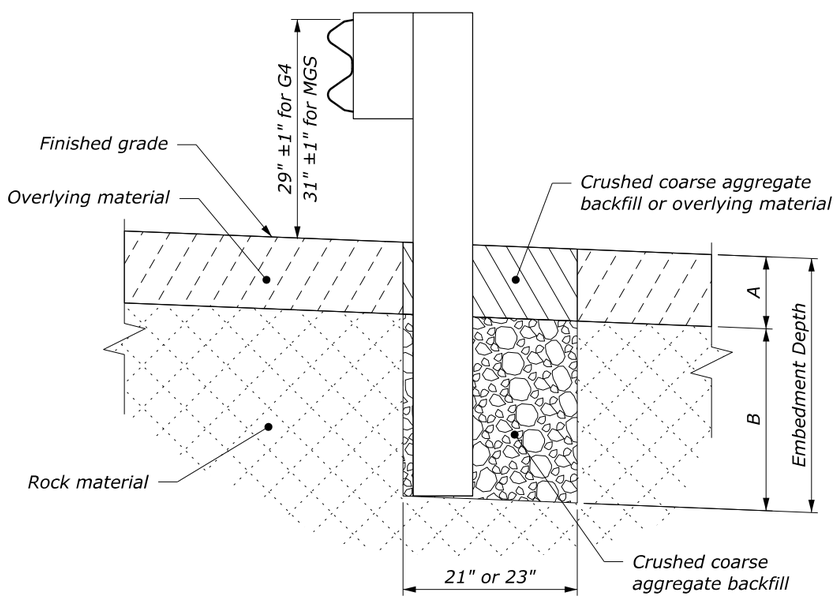

ELEVATION

Case 1: Overlying material depth (A) is 18" or less

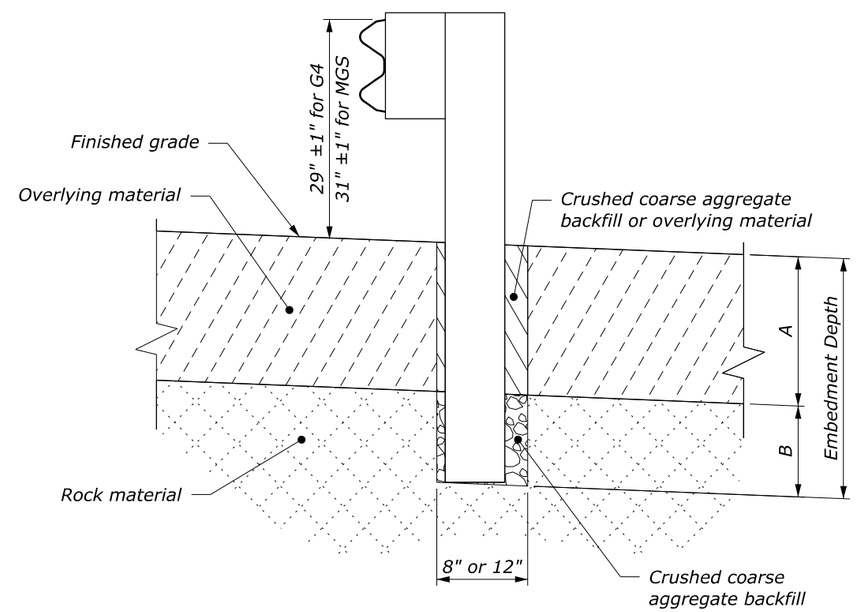

ELEVATION

Case 2: Overlying material depth (A) is greater than 18"

POST EMBEDMENT DIMENSIONS			
HOLE TYPE	EMBEDMENT DEPTH	OVERLYING MATERIAL (A)	DRILLING DEPTH (B)
Case 1	24" to 42"	0 to 18"	24"
Case 2	30" to 42"	> 18" to 30"	12"
	42"	> 30"	42" - A

NO SCALE

MGS AND G4 W-BEAM GUARDRAIL INSTALLATION IN ROCK

SPECIAL 617-A

c:\pw_work_cfl\dms14739\617-A.dgn {Std 617-13}
1 June 2026 11:52 AM

PROJECT	SHEET NUMBER
AZ NP GRCA 14(2)	N.2

NOTE:

1. Typical post spacing is 6'-3" unless otherwise noted.
2. See Special 617-D (Steel Posts) for other details.

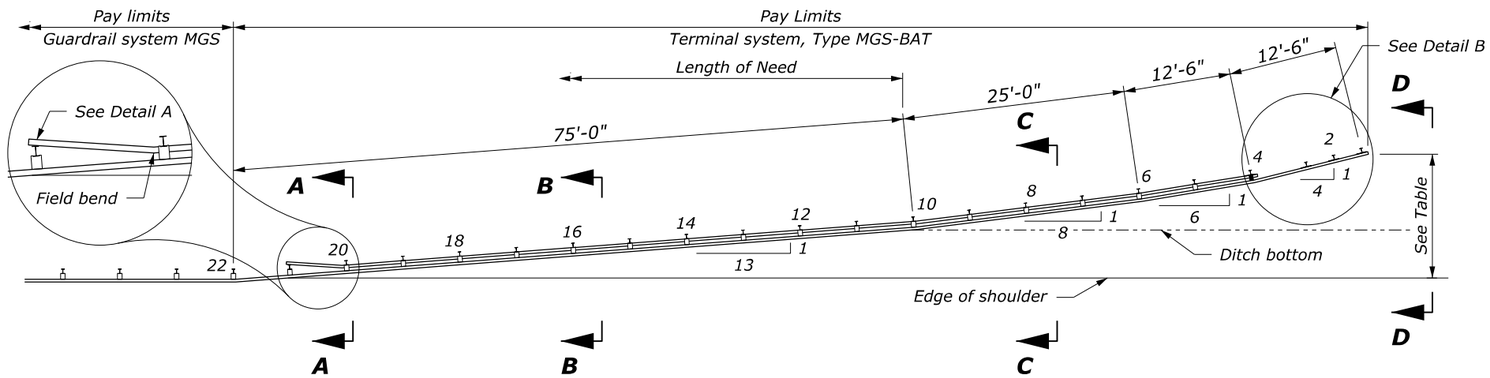

PLAN

POST OFFSETS FROM EDGE OF SHOULDER	
POST	DISTANCE
1	13'-11¾"
4	10'-11"
6	8'-10¼"
10	5'-9"

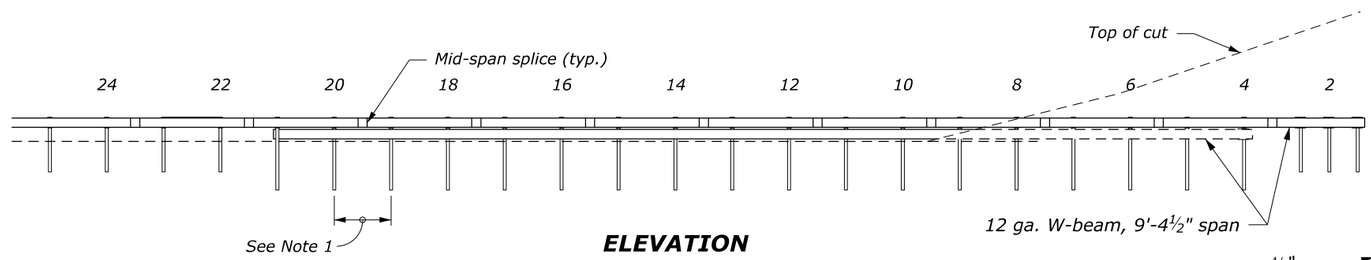

ELEVATION
ALONG RAIL

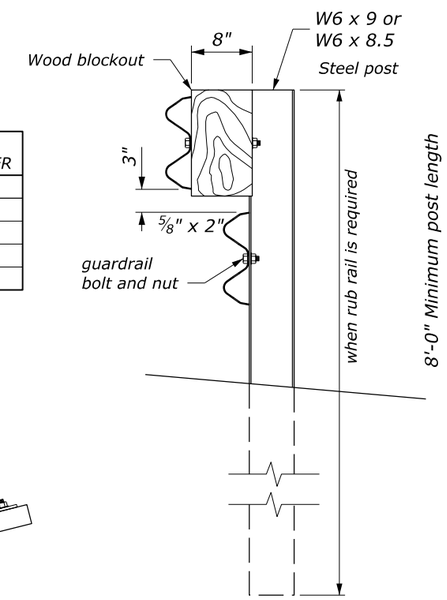

ELEVATION

STEEL POST AND BLOCKOUT DETAIL

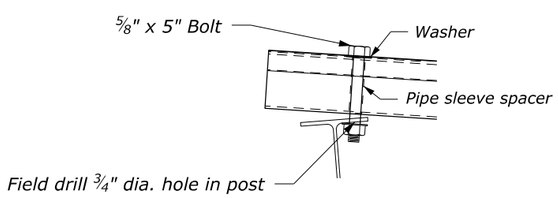

DETAIL A

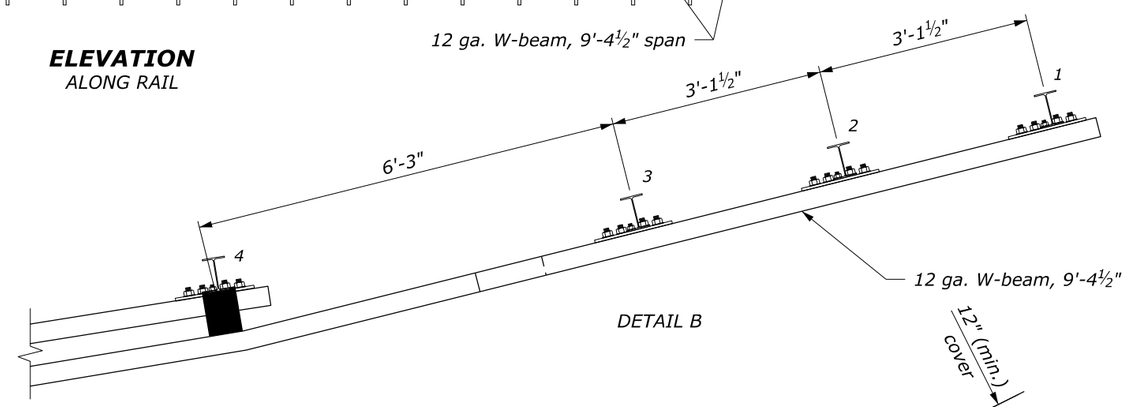

DETAIL B

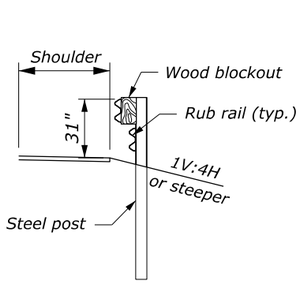

SECTION A-A

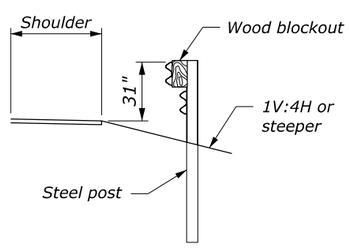

SECTION B-B

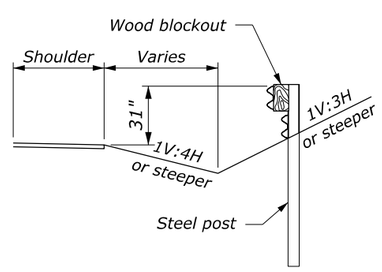

SECTION C-C

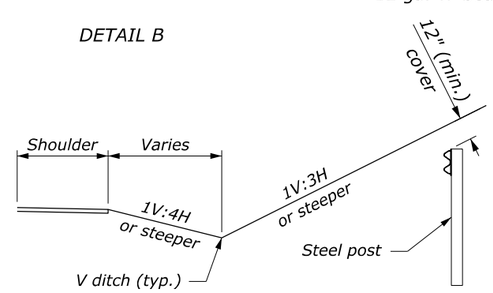

SECTION D-D

NO SCALE

MGS W-BEAM GUARDRAIL
BACK SLOPE ANCHOR TERMINAL
TYPE MGS-BAT
Sheet 1 of 2

SPECIAL
617-B

c:\pw_work_cfl\dms14739\617-B.dgn [Std 617-18a]
1 June 2026 11:53 AM

NOTE:

1. See Sheet 1 of 2 for terminal layout.
2. Use zinc rich paint to coat field drilled holes.
3. Anchor plate and hardware are typical on top rail of Posts 1 -3 and rub rail at Post 4.

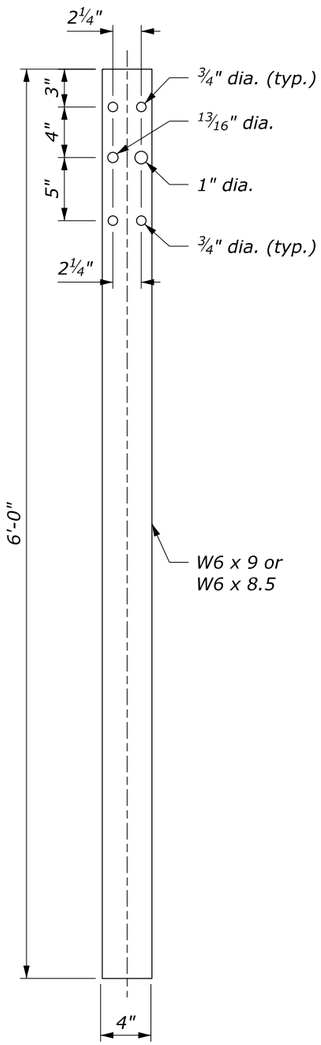

POSTS 1-3

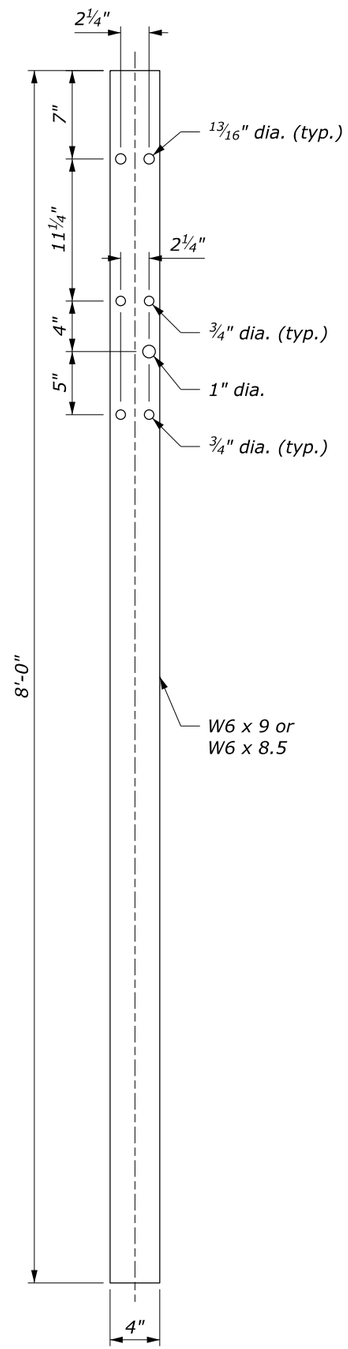

POST 4

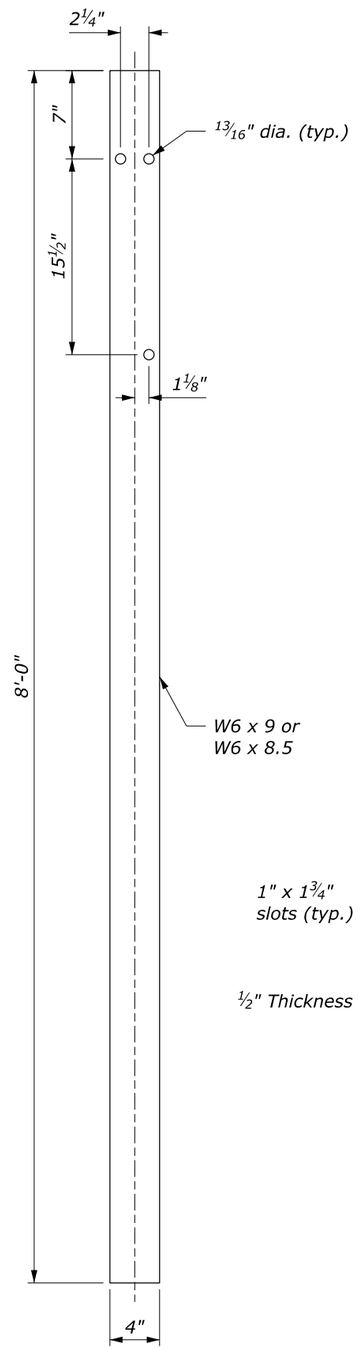

POSTS 5-21

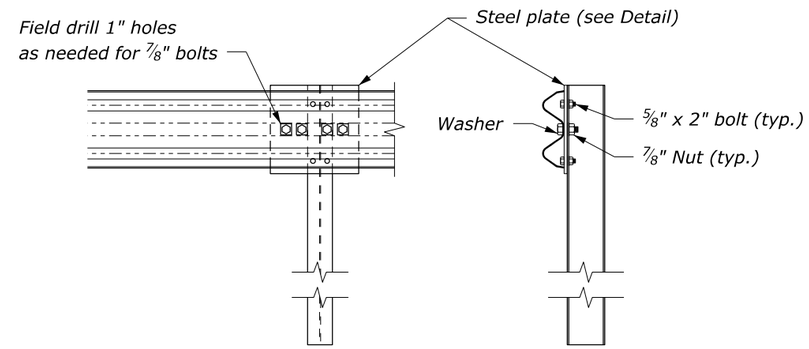

SPECIAL RAIL TO POST CONNECTION AT POSTS 1, 2, AND 3

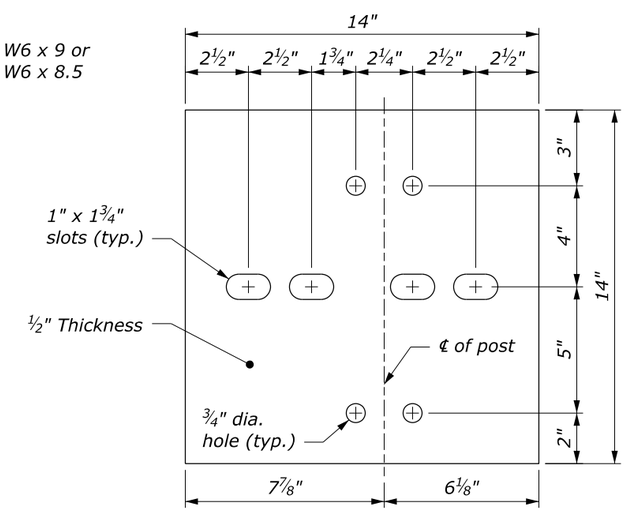

GALVANIZED STEEL PLATE

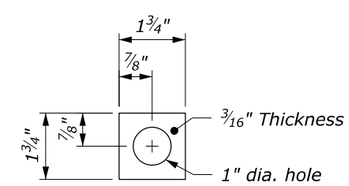

GALVANIZED SQUARE WASHER

STEEL PLATE AND WASHER
See Note 3

NO SCALE

MGS W-BEAM GUARDRAIL
BACK SLOPE ANCHOR TERMINAL
TYPE MGS-BAT
Sheet 1 of 2

SPECIAL
617-B

c:\pw_work\cfl\dms14739\617-B.dgn (Std 617-18b)
1 June 2026 11:53 AM

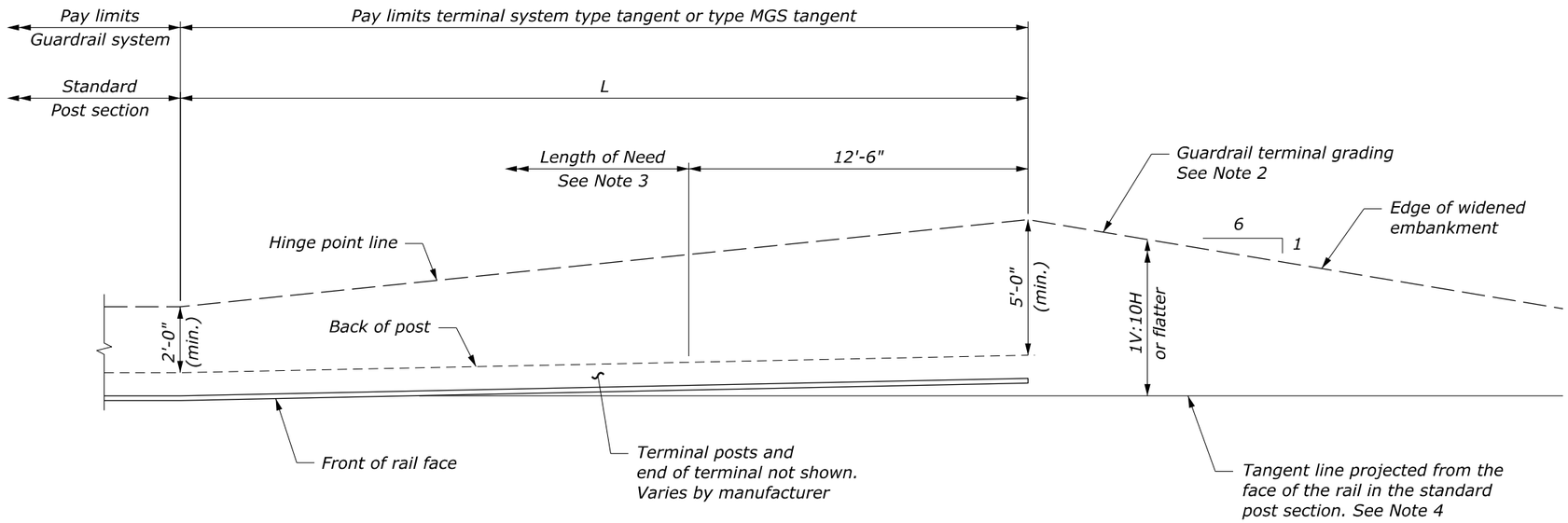

PLAN

PREFERRED GRADING

NOTE:

1. Install tangent terminal according to the manufacturer's recommendations. See manufacturer's drawings for other details.
2. Construct the terminal grading layout as shown in the staking notes or model. If no staking notes or model are provided, use the preferred grading layout or as directed to fit site constraints. If necessary because of site limitations, use the alternative grading layout.
3. For design purposes, the length of need is assumed to begin at post 3. Verify the length of need with the manufacturer for a specific product. Adjust grading as necessary to install the tangent terminal according to the manufacturer's recommendations.
4. Install terminal at a 1:25 taper or flatter to position the end farther from the edge of shoulder, or use a taper according to the manufacturer's recommendations.
5. Install a reflectorized object marker on the end of the terminal.

TEST LEVEL	L (FT)
2 (≤ 45 mph)	25
3 (> 45 mph)	37.5 or 50 (for G4)
	50 (for MGS)

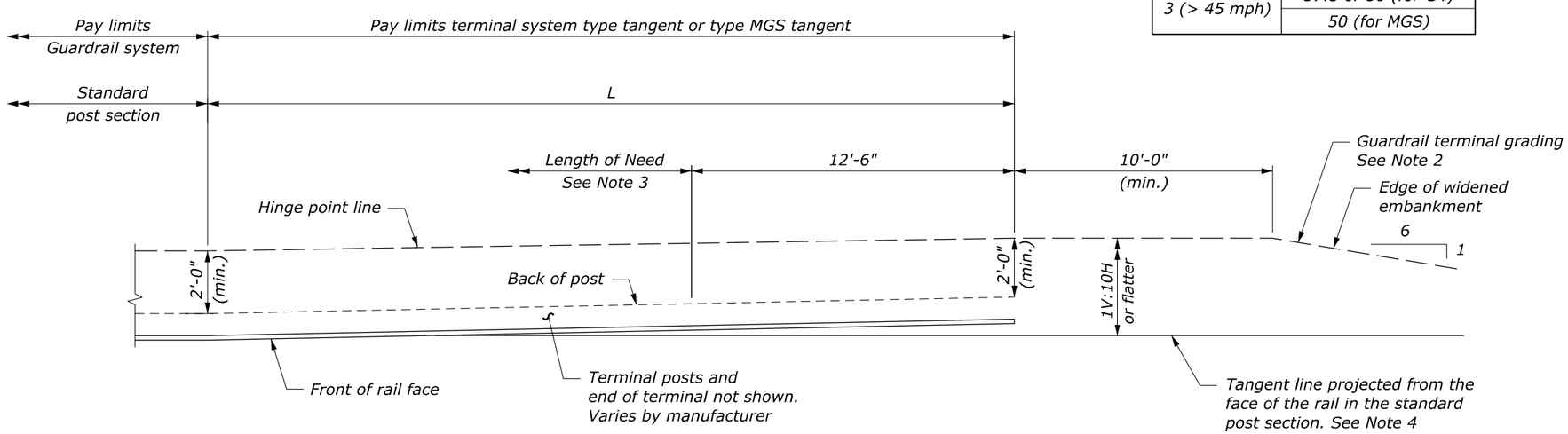

PLAN

ALTERNATIVE GRADING

NO SCALE

MGS AND G4
W-BEAM GUARDRAIL
TYPE TANGENT TERMINAL
AND GRADING

SPECIAL
617-C

c:\pw_work_cflhdms\14739\617-C.dgn [Std 617-20]
1 June 2026 11:54 AM

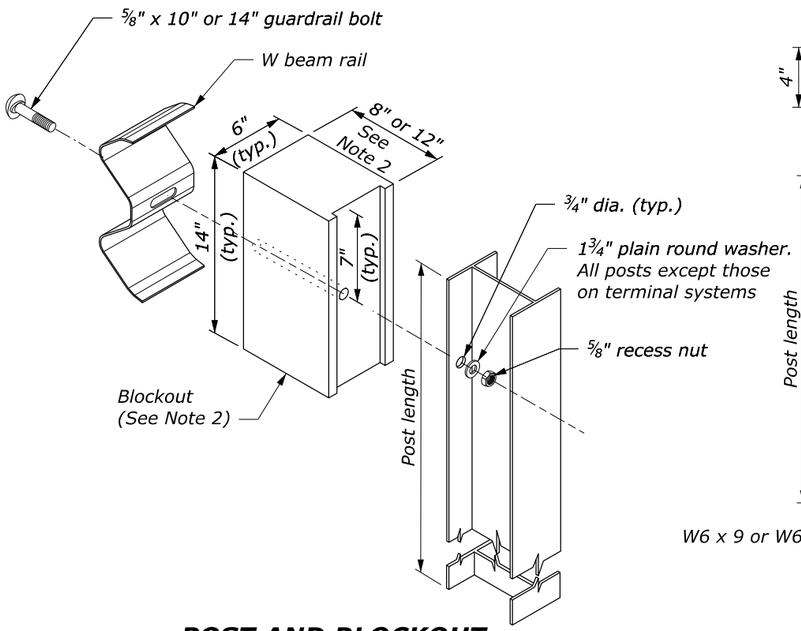

POST AND BLOCKOUT DETAIL

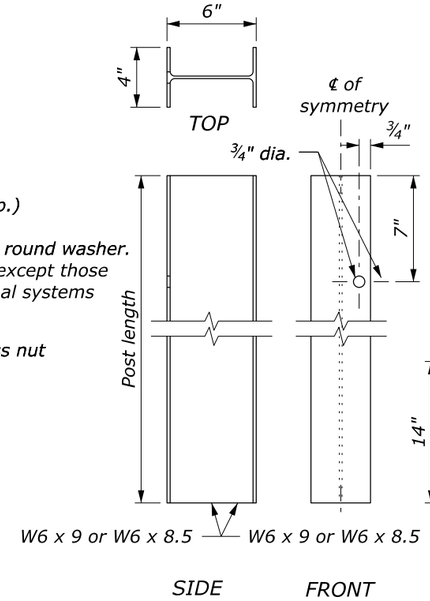

STRUCTURAL SHAPE POST

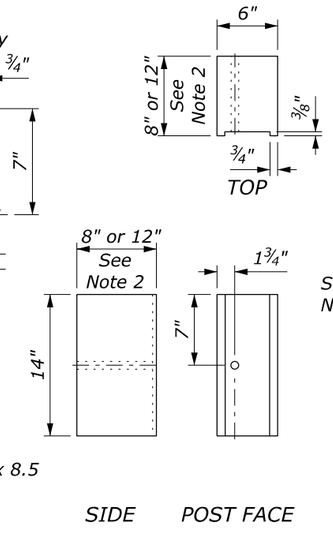

BLOCKOUT

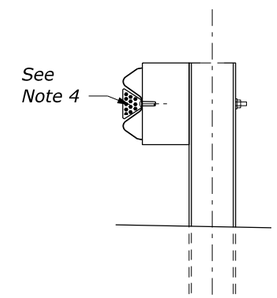

FLEXIBLE DELINEATOR GUARDRAIL MOUNT

NOTE:

1. When encountering impenetrable material, one post may be omitted in locations where the typical guardrail cross section includes 2-feet (min) between the back of the guardrail post and the hinge point. For all other locations, see Special 617-A.
2. Size of blockout shown elsewhere in the plans. Blockout may be wood, plastic, or composite material. Use consistent material throughout the length of guardrail run and project wide.
3. Dimensional tolerances not shown or implied are intended to be those consistent with the proper functioning of the part, including its appearance, and accepted manufacturing practices.
4. Install retroreflector tabs on 25 ft. intervals. Do not install tabs on post bolts. Install so the bolt slot faces away from traffic, and retroreflector surface faces oncoming traffic. For two-way roads, both sides of the reflector tab shall be retroreflective. Retroreflective sheeting color matches the color of the adjacent travel way edge stripe.

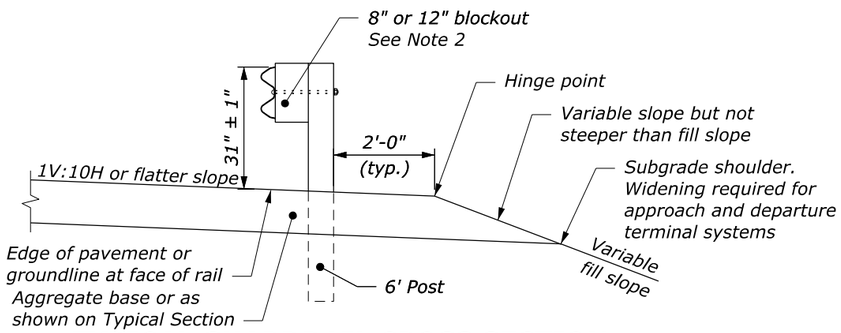

TYPICAL GUARDRAIL CROSS SECTION 6' POST, 8" OR 12" BLOCKOUT

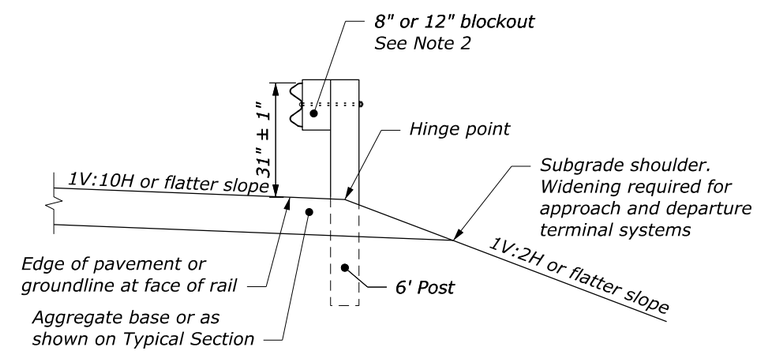

TYPICAL GUARDRAIL CROSS SECTION 6' POST CENTERED ON HINGE, 8" OR 12" BLOCKOUT

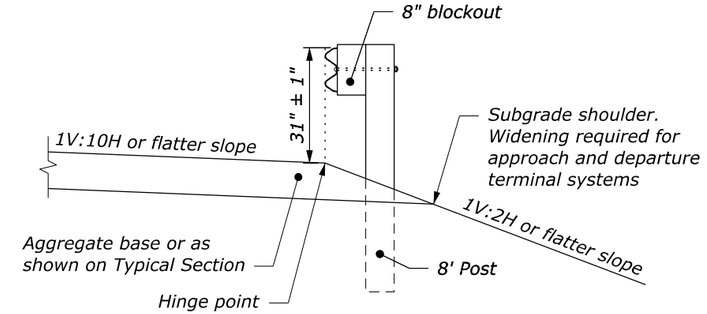

TYPICAL GUARDRAIL CROSS SECTION 8' POST ON SLOPE, 8" BLOCKOUT

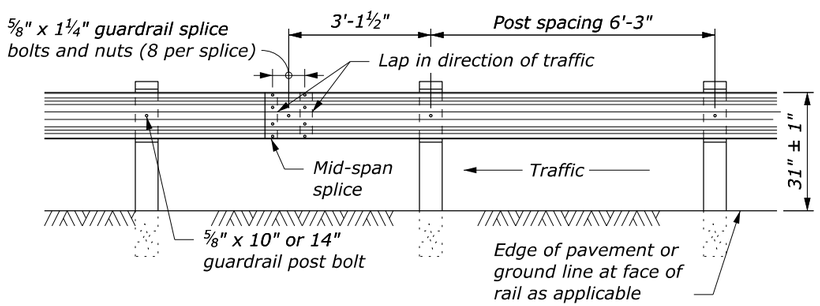

TYPICAL GUARDRAIL ELEVATION

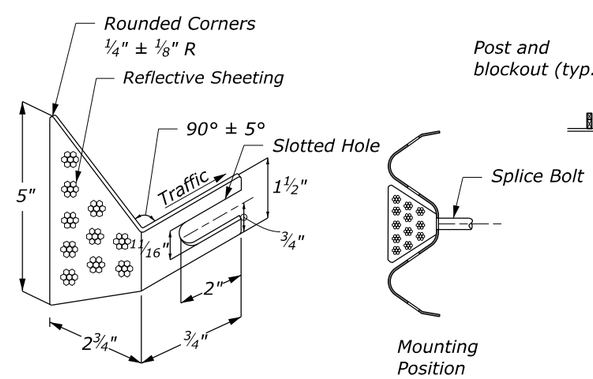

RETROREFLECTOR TAB

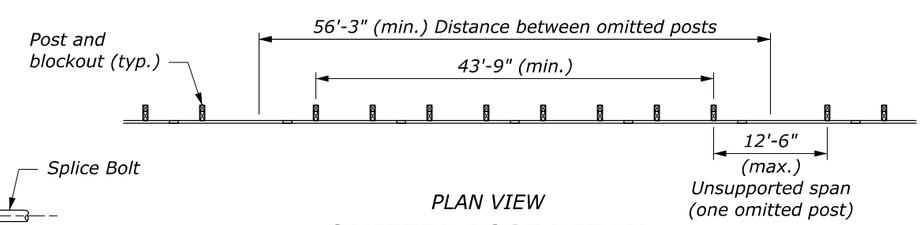

PLAN VIEW

OMITTED POST DETAIL

See Note 1

NO SCALE

SPECIAL 617-D

MGS W-BEAM GUARDRAIL STEEL POSTS

c:\pw_work_cflldms14739\617-D.dgn [Std 617-32]
1 June 2026 11:56 AM

PROJECT	SHEET NUMBER
AZ NP GRCA 14(2)	N.6

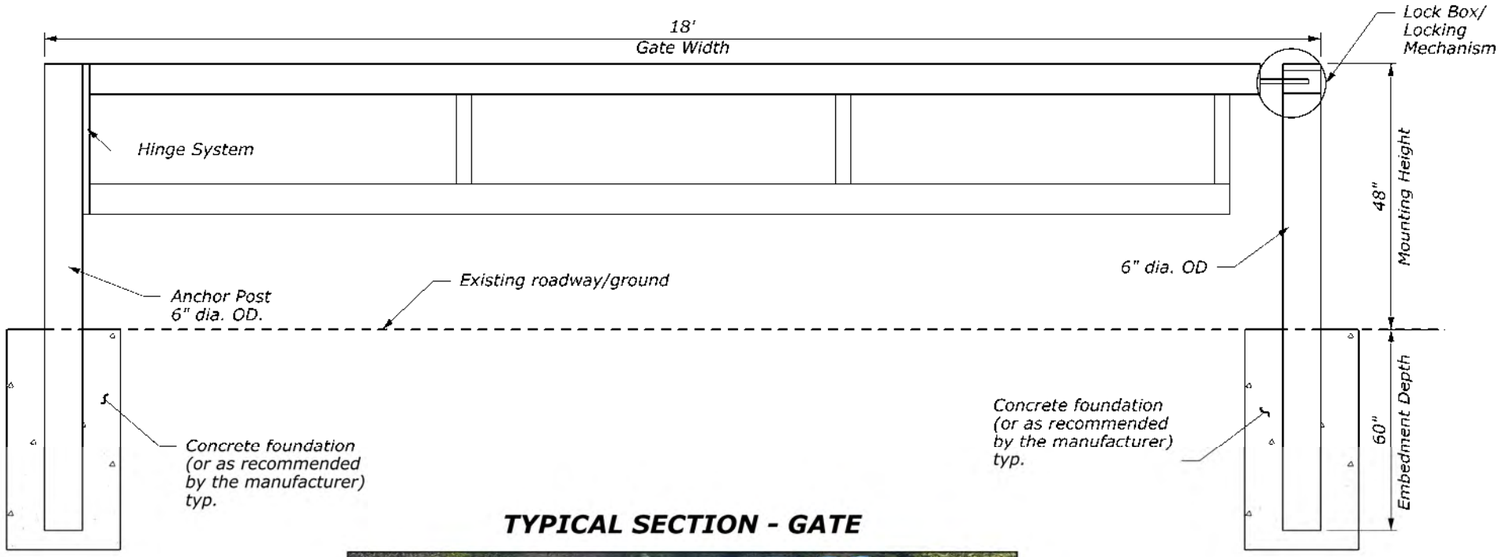

TYPICAL SECTION - GATE

EXAMPLE GATE

PROPOSED GATE LOCATION

NO SCALE

GENERAL NOTE:

1. Install Gate where shown in the plans. Finalize gate location with the CO. The gate, posts, hardware, locking mechanism/box, foundation and all other components and labor are included in the gate system.
2. Gate photos are shown as an example only.

MATERIALS:

1. Concrete: Provide 4,000 psi concrete with a 1-1/2" nominal maximum aggregate size. Concrete may be a mix design that is in use by Arizona Department of Transportation or Utah Department of Transportation.
2. Steel: Use 36 KSI steel conforming to ASTM A 36.
4. Powder Coating: Submit powder coating samples according to the contract. Powder coat all components and hardware. Use hot dip galvanized hardware. Treat galvanized hardware with a weathering agent. Submit color samples for powder coating prior to fabrication. Submit colors similar to an NPS or USFS brown commonly used.
5. Safety Features. Place Red/white retroreflective material on top and bottom rails according to the MUTCD.

INSTALLATION:

1. Install the proposed gate at the approved location per the manufacturers recommendations.

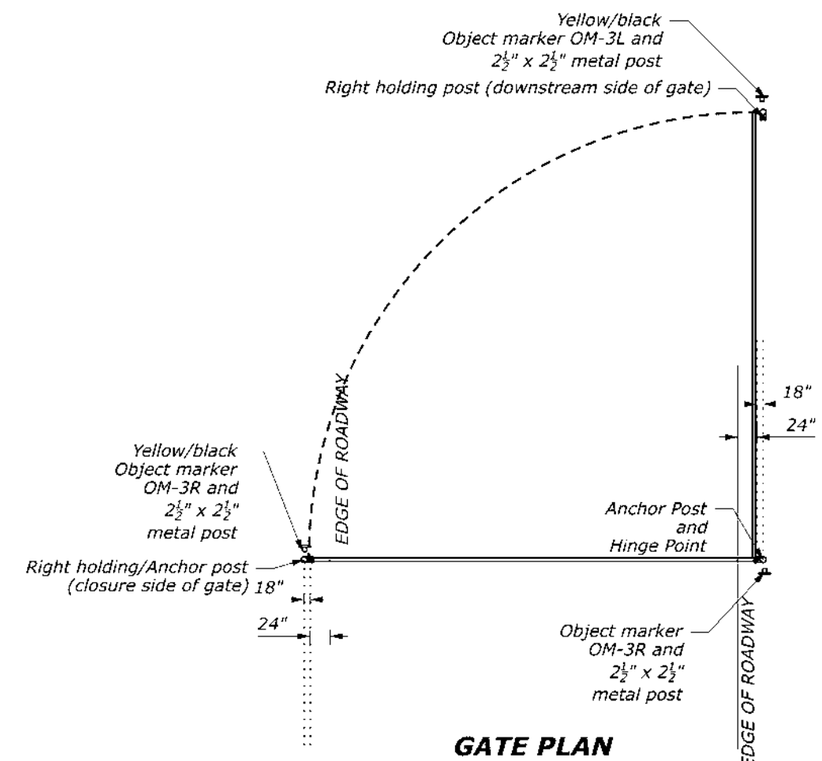

GATE PLAN

NO SCALE

SPECIAL
619-A

ROADWAY CLOSURE GATE

c:\pw_work\dfldms14739\SP 619A Gate.dgn [GRCA Gate]
11 June 2026 6:00 PM

© 2026 Microsoft Corporation © 2026 Maxar ©CNES (2026) Distribution Airbus DS © Maptiler

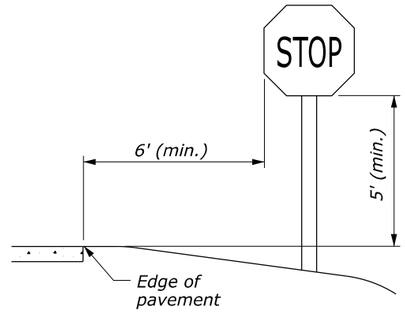

WITHOUT SHOULDER

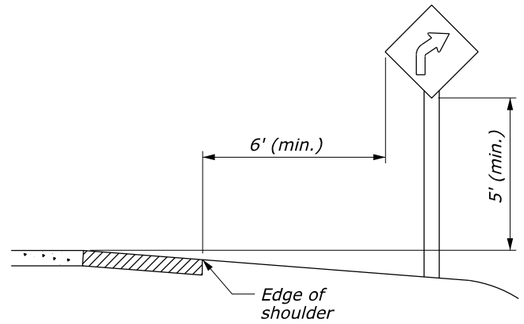

WITH SHOULDER

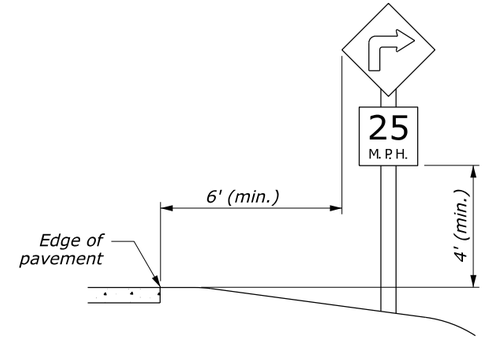

WITH ADVISORY SPEED PLAQUE

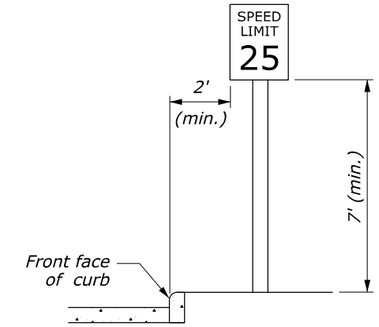

ROADSIDE SIGN IN BUSINESS OR RESIDENTIAL DISTRICT

ROADSIDE SIGN IN RURAL DISTRICT

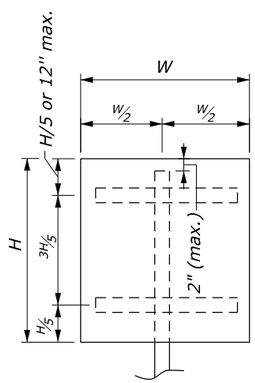

SINGLE POST

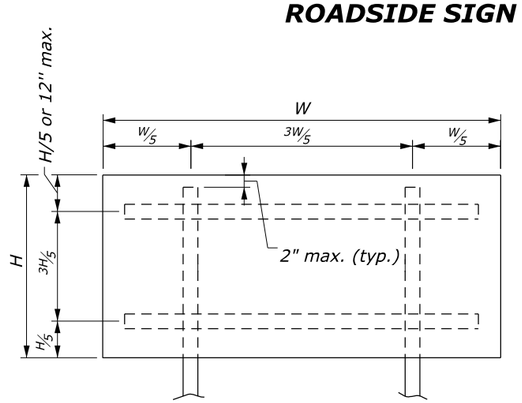

DOUBLE POST

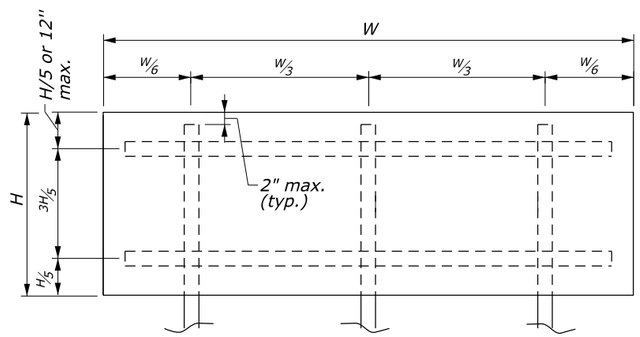

TRIPLE POST

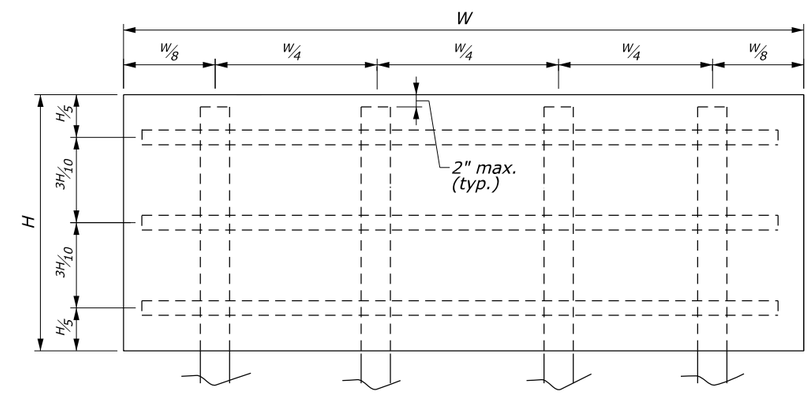

QUADRUPLE POST

NOTES:

1. Locate and set sign height according to the "Manual on Uniform Traffic Control Devices" (MUTCD), latest edition.
2. For U-channel, square tubular, and corrosion resistant steel posts for which the sign panel area is 10 square feet or less but W is over 4 feet, use double posts.
3. For square tabular steel double posts for which the sign panel area is equal to 24 square feet, use slip base according to manufacturer's recommendations.
4. Refer to Detail E633-02 for breakaway support details for corrosion resistant steel posts.
5. Refer to Detail E633-03 for breakaway support details for wood, U-channel steel and square tubular steel posts.
6. Refer to Detail E633-04 for bracing details for wood, U-channel steel and square tubular steel posts.
7. Refer to Section 2A.18 of the MUTCD, latest edition, for additional information.

POST SIZE TABLE

POST TYPE	POST SIZE	MAXIMUM SIGN AREA (SQFT)			
		SINGLE POST	DOUBLE POST	TRIPLE POST	QUADRUPLE POST
Wood	4" x 4"	10	20		
	4" x 6"	15	35	45	60
	6" x 6"	20	50	75	100
U-Channel Steel		10*	24	30	
Square Tubular Steel	2" 12 ga.	10*	16		
	2" 12 ga.	10*	24**		
Corrosion Resistant Steel	2" x 2" 10 ga. Class B	10*	24		

* See Note 2
** See Note 3

NO SCALE

U.S. DEPARTMENT OF TRANSPORTATION, FHWA
OFFICE OF FEDERAL LANDS HIGHWAY

SIGN STRUCTURES

EFLHD DETAIL
E633-01

SPECIFICATION
FP-24, FP-14

APPROVED FOR USE
06/2024

c:\pw_work_cfl\dms14741\E633-01.dgn [Sheet]
1 June 2026 11:29 AM

WOOD POST DATA TABLE		
POST SIZE	HOLE DIAMETER	(D) (MIN.)
4" x 4"	Not Required	3'
4" x 6"	1.5"	4'
6" x 6"	2"	4'

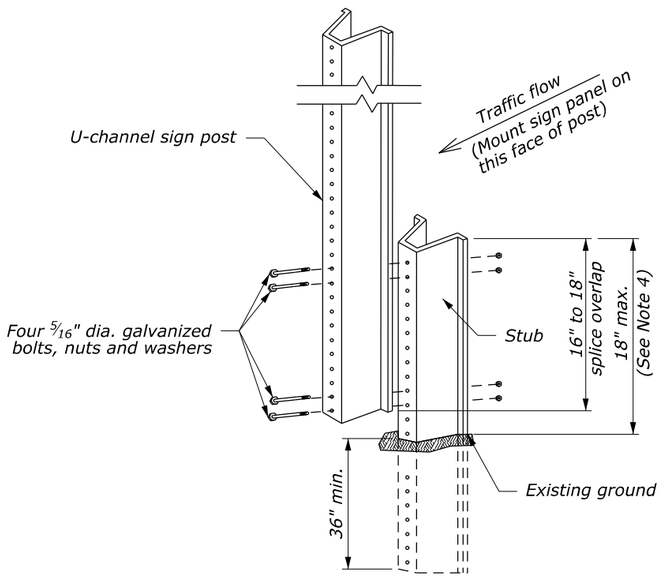

U-CHANNEL STEEL POST

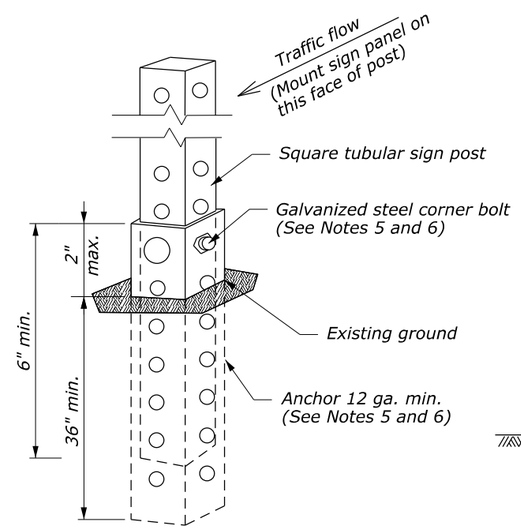

SQUARE TUBULAR STEEL POST

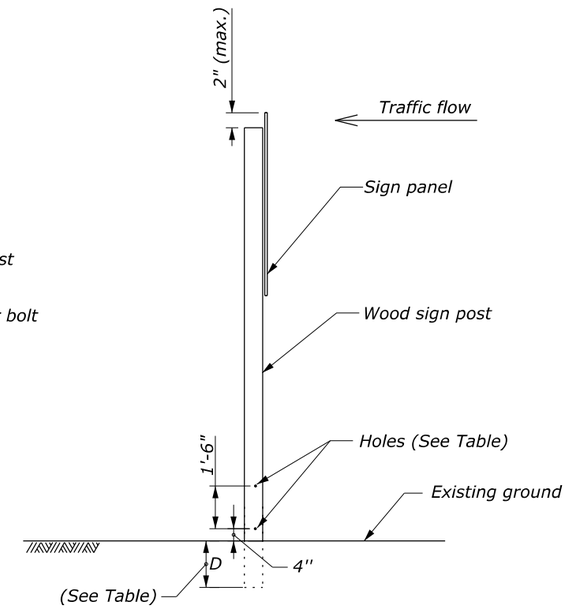

WOOD POST

BREAKAWAY SIGN SUPPORT

NOTES:

1. Breakaway sign support is not required for signs placed behind protective barriers.
2. Signs requiring 6- by 6-inch wood posts are considered to be non-breakaway if multiple posts are required and posts cannot be spaced a minimum of 7 feet apart.
3. Place non-breakaway signs outside the clear zone or shield with approved barrier. Do not place holes in posts of non-breakaway signs.
4. Position splice overlap on U-channel steel posts entirely between the ground line and 18 inches above the ground line. Do not place more than one splice per post.
5. Attach the square tubular steel post to the anchor with a corner bolt according to the manufacturer's recommendations. Size the anchor according to the manufacturer's recommendations to accept the post size specified.
6. Maintain the post assembly in a plumb position.
7. For sign punching details, see the blank standards in the "Standard Highway Signs and Markings" as specified in the latest edition of the MUTCD.
8. Refer to Detail E633-01 for sign mounting details.
9. Refer to Detail E633-04 for sign bracing details.
10. Refer to Section 2A.18 of the MUTCD, latest edition, for additional information.

NO SCALE

U.S. DEPARTMENT OF TRANSPORTATION, FHWA
OFFICE OF FEDERAL LANDS HIGHWAY

BREAKAWAY SIGN SUPPORT WOOD AND STEEL POSTS

EFLHD DETAIL
E633-03

SPECIFICATION
FP-24, FP-14

APPROVED FOR USE
06/2024

1 June 2026 11:29 AM c:\pw_work_cfl\dms14741\E633-03.dgn [Sheet]

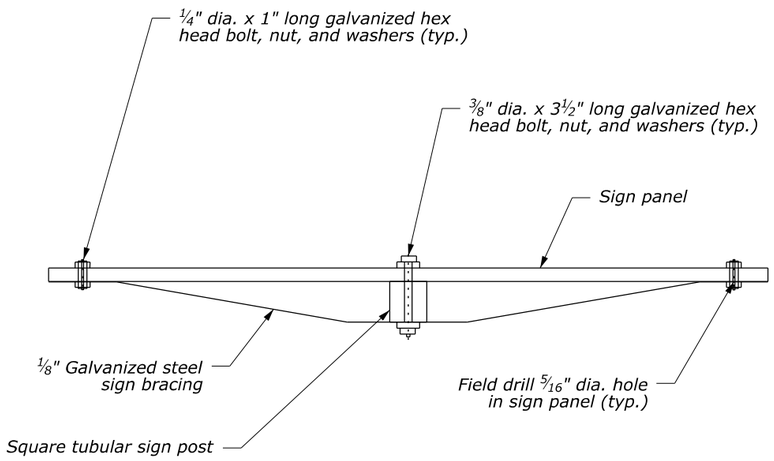

SQUARE TUBULAR STEEL POST

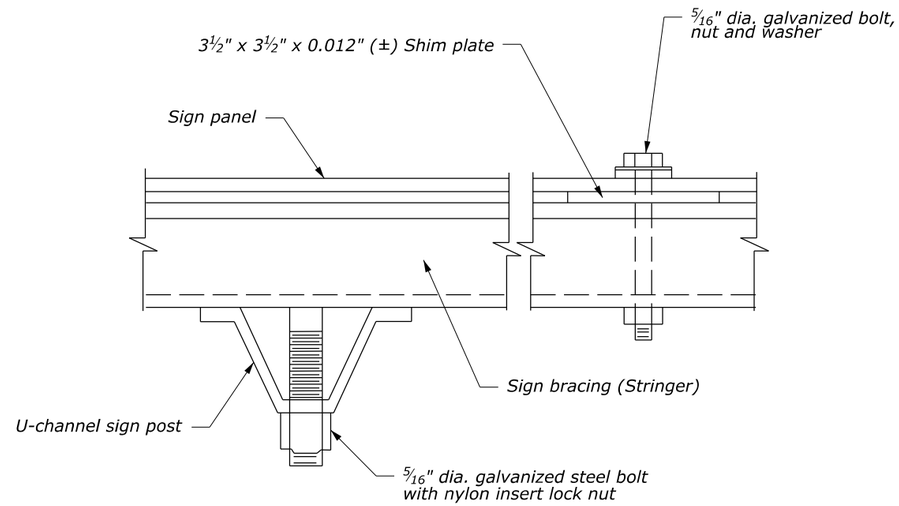

U-CHANNEL STEEL POST

NOTES:

1. Install sign braces on signs with widths of 48 inches or greater. Install sign braces on signs with widths of 36 inches when specified or as directed.
2. For sign punching details, see the blank standards in the "Standard Highway Signs and Markings" as specified in the latest edition of the MUTCD.
3. Use wood battens bolted to post at vertical spacings not to exceed 30 inches.
4. Use neoprene or nylon washers between the sign panel's retroreflective sheeting and the steel washer.
5. Refer to Detail E633-01 for sign mounting details.
6. Refer to Section 2A.18 of the MUTCD, latest edition, for additional information.

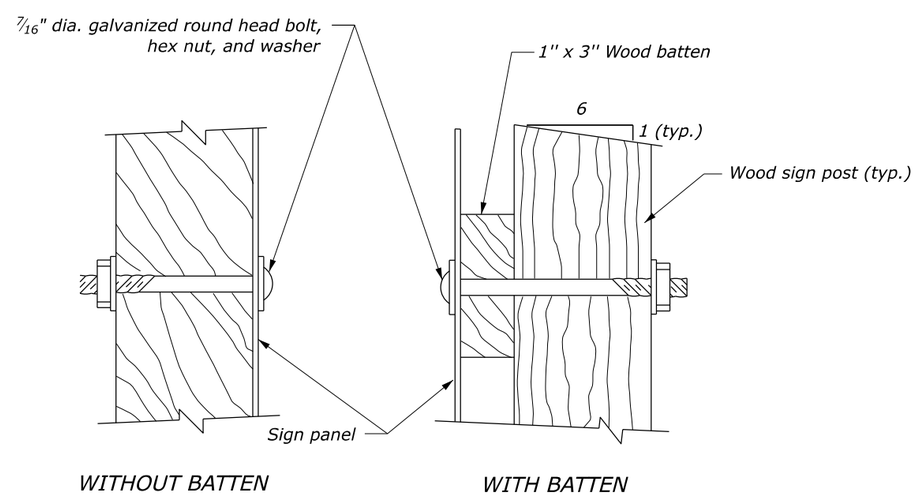

WOOD POST

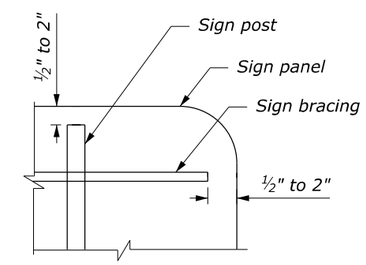

BRACING INSTALLATION TOLERANCES

NO SCALE

U.S. DEPARTMENT OF TRANSPORTATION, FHWA OFFICE OF FEDERAL LANDS HIGHWAY	EFLHD DETAIL E633-04
SIGN BRACING	SPECIFICATION FP-24, FP-14
	APPROVED FOR USE 06/2024

c:\pw_work_cfl\dms14741\E633-04.dgn {Sheet}
1 June 2026 11:31 AM

Post Ordering Sheet	
Top Post Type:	
X	Round Top
	Flat Top
Bottom Post Color	
	(W) White
	(Y) Yellow
	(O) Orange
	(B) Black
X	(G) Green
	(E) Gray
	(R) Red
	(N) Brown
Top Post Color	
X	(O) Orange
	(B) Black
Overall Post Height	
	72"
	84"
X	96"
Bottom Post Height	
X	48"
	54"
	60"
Sheeting Type	
X	Type III/IV High Intensity
	Type V AR1000
	Type XI Diamond Grade
Sheeting Color	
X	(W) White
	(Y) Yellow
	(O) Orange
	(G) Green
	(R) Red
	(B) Blue
Sheeting Size	
X	3" x 8" (wraps)
	4" x 8" (wraps)

SNOW POLE CONFIGURATION

"96" SNOW-POLE" SHUR-FLEX® DRIVEABLE DELINEATOR DETAIL GREEN BOTTOM/ORANGE TOP #DC96GOR3 (AS CONFIGURED)

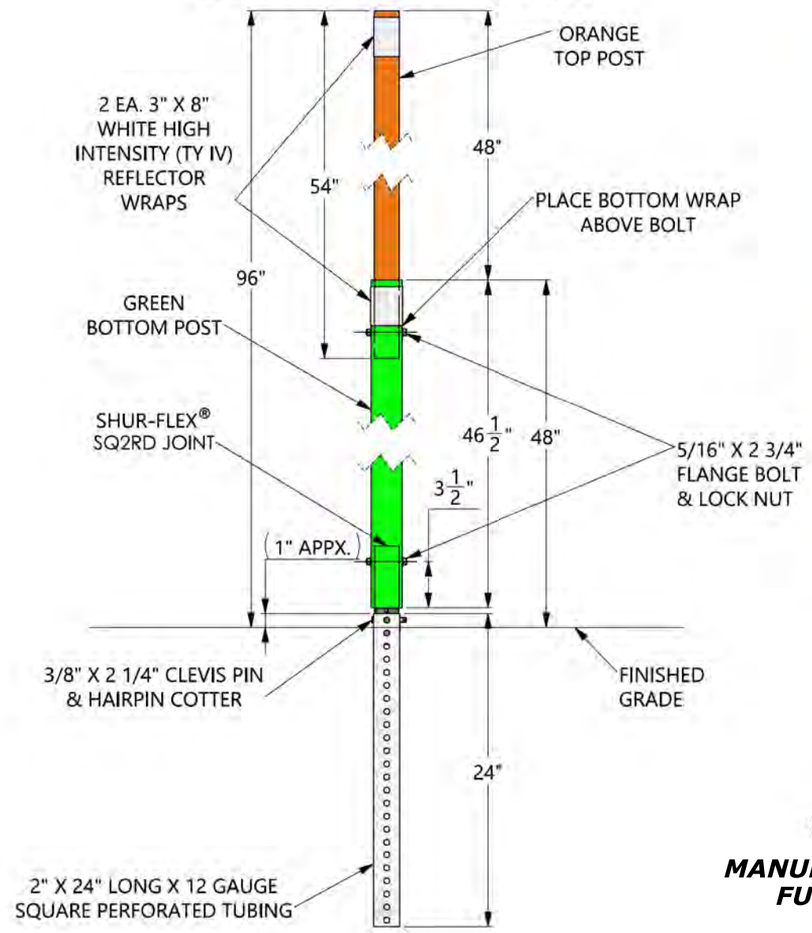

MANUFACTURER INSTALLATION DETAIL

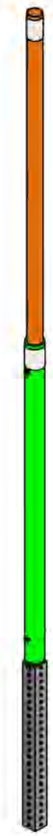

PAT# 7,722,286

MANUFACTURER DETAIL FULL EXTENSION

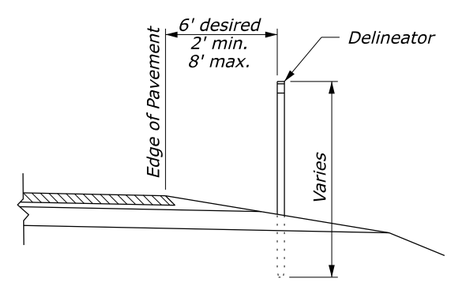

LOCATION OF DELINEATOR, TYPE SNOW POLE

NOTE:

MATERIALS:

1. *Submit certificates of compliance and manufacturers information for required hardware to install snow pole delineators. Use only manufacturers recommended hardware.*

INSTALLATION:

1. *Order and install the "SHUR-TITE "96" SNOW POLE SHUR-FLEX DRIVEABLE DELINEATOR"" snow delineator with the configuration shown on this sheet.*
2. *Install reflective elements according to the manufacturer's recommendations.*
3. *Place delineators at a constant distance from the edge of the pavement. Where guardrail intrudes into the space between the edge of pavement and the delineator offset, locate the delineator immediately behind the guardrail.*
4. *See plan sheets for approximate snow pole delineator locations.*

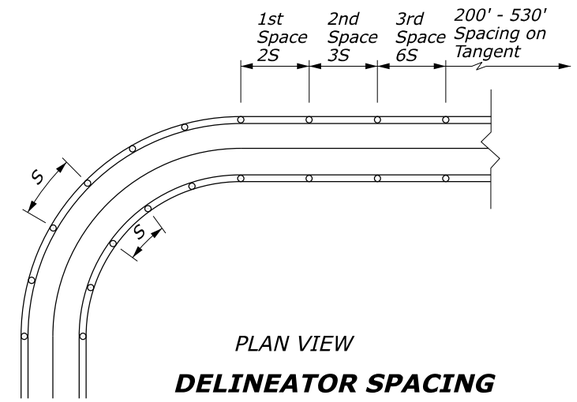

PLAN VIEW

DELINEATOR SPACING

DELINEATOR SPACING ON CURVES

RADIUS OF CURVE (R)	SPACING ON CURVE (S)	SPACING ON TANGENTS AT CURVE ENDS		
		1st Space (2 S)	2nd Space (3 S)	3rd Space (6 S)
(feet)	(feet)	(feet)	(feet)	(feet)
50	20	40	60	120
115	25	50	75	150
180	35	70	105	210
250	40	80	120	240
300	50	100	150	300
400	55	110	165	300
500	65	130	195	300
600	70	140	210	300
700	75	150	225	300
800	80	160	240	300
900	85	170	255	300
1,000	90	180	270	300

DELINEATOR SPACING NOTES

1. *Spacing for specific radii may be interpolated from the table.*
2. *Values shown for S in the table are computed from the formula $S = 3\sqrt{R-50}$, where S = delineator spacing and R = horizontal curve radius Values are rounded to the nearest 5 feet.*

NO SCALE

SPECIAL 633-A

DELINEATOR SNOW POLE INSTALLATION

1 June 2026 11:34 AM c:\pw_work_cfl\dms14741\633-A.dgn [Det C633-51]

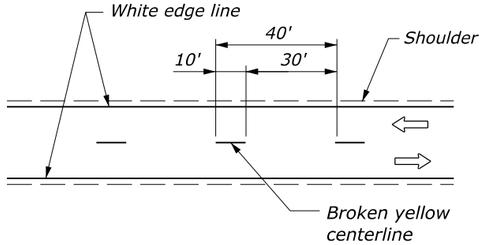

DETAIL A

Passing zone both directions
Two-way traffic

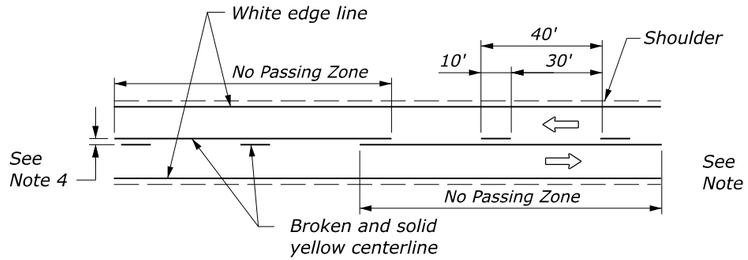

DETAIL B

No passing zone single lane direction
Two-way traffic

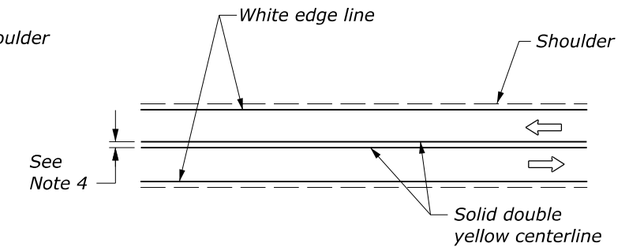

DETAIL C

No passing zone both directions
Two-way traffic

NOTE:

1. See Summary for tables showing station ranges and quantities for pavement markings.
2. Paint centerline striping on curves with curve widening to achieve equal lane widths within the traveled way. Shoulder widths remain constant throughout the curve widening.
3. Centerline offset striping is only applicable to curve widening on simple curves.
4. Use 4-inch spacing between lines, or as required by the state.
5. Paint the edge line striping outside the travel way and curve widening, 2-inch maximum from the normal edge of shoulder.

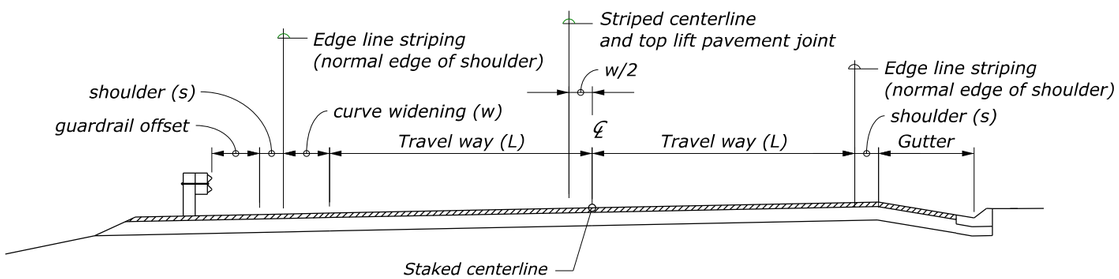

CURVE WIDENING ON SIMPLE CURVES (INSIDE)

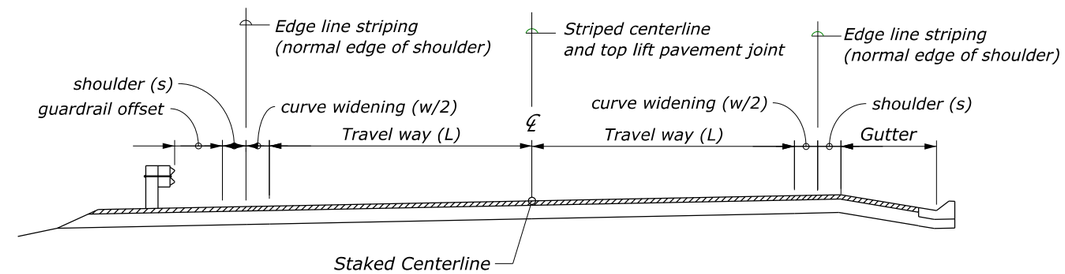

CURVE WIDENING ON SPIRAL CURVES

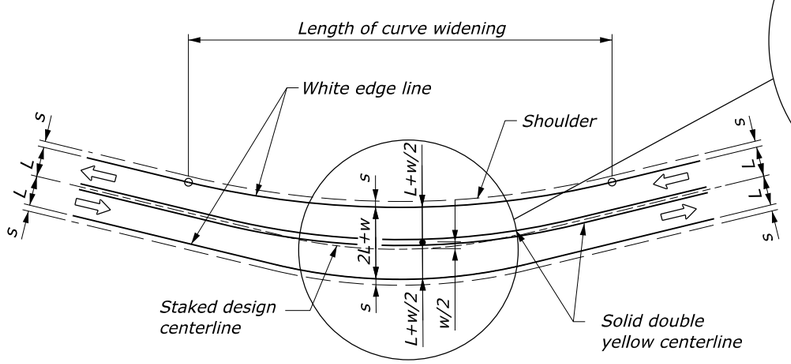

PAVEMENT MARKING DETAIL ON SIMPLE CURVES

To be used on curves where curve widening is applied. See note 2

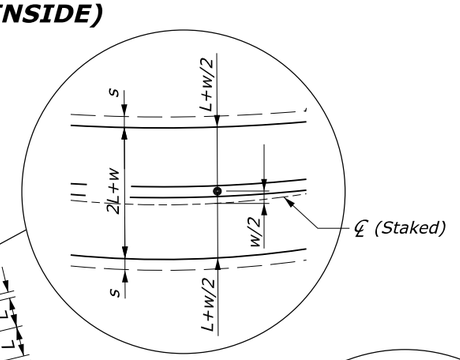

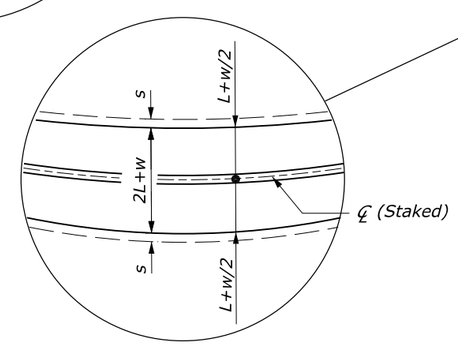

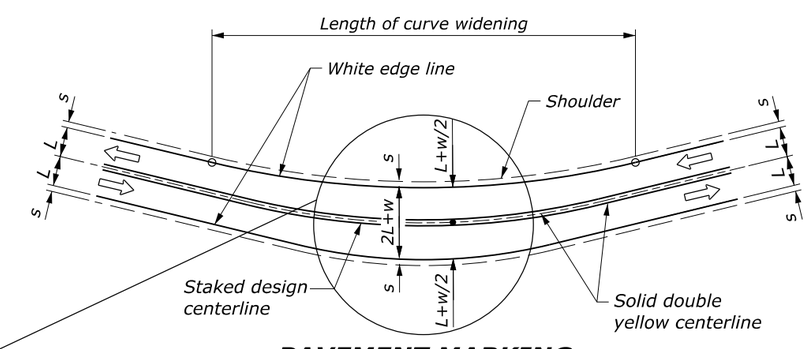

PAVEMENT MARKING DETAIL ON SPIRAL CURVES

To be used on curves where curve widening is applied. See Note 2

NO SCALE

U.S. DEPARTMENT OF TRANSPORTATION, FHWA OFFICE OF FEDERAL LANDS HIGHWAY	CFL STANDARD C634-50
LINEAR PAVEMENT MARKINGS	SPECIFICATION FP-24, FP-14
	APPROVED FOR USE 06/2024

c:\pw_work_cfl\dms14741\C634-50.dgn [Det C634-50]
1 June 2026 11:31 AM

SIGN SPACING TABLE			
ROAD TYPE	DISTANCE BETWEEN SIGNS IN FEET		
	A	B	C
Urban and Rural 30 mph and less	100	100	100
Urban and Rural 35 mph to 50 mph	350	350	350
Rural greater than 50 mph	500	500	500
Expressway / Freeway	1000	1500	2640

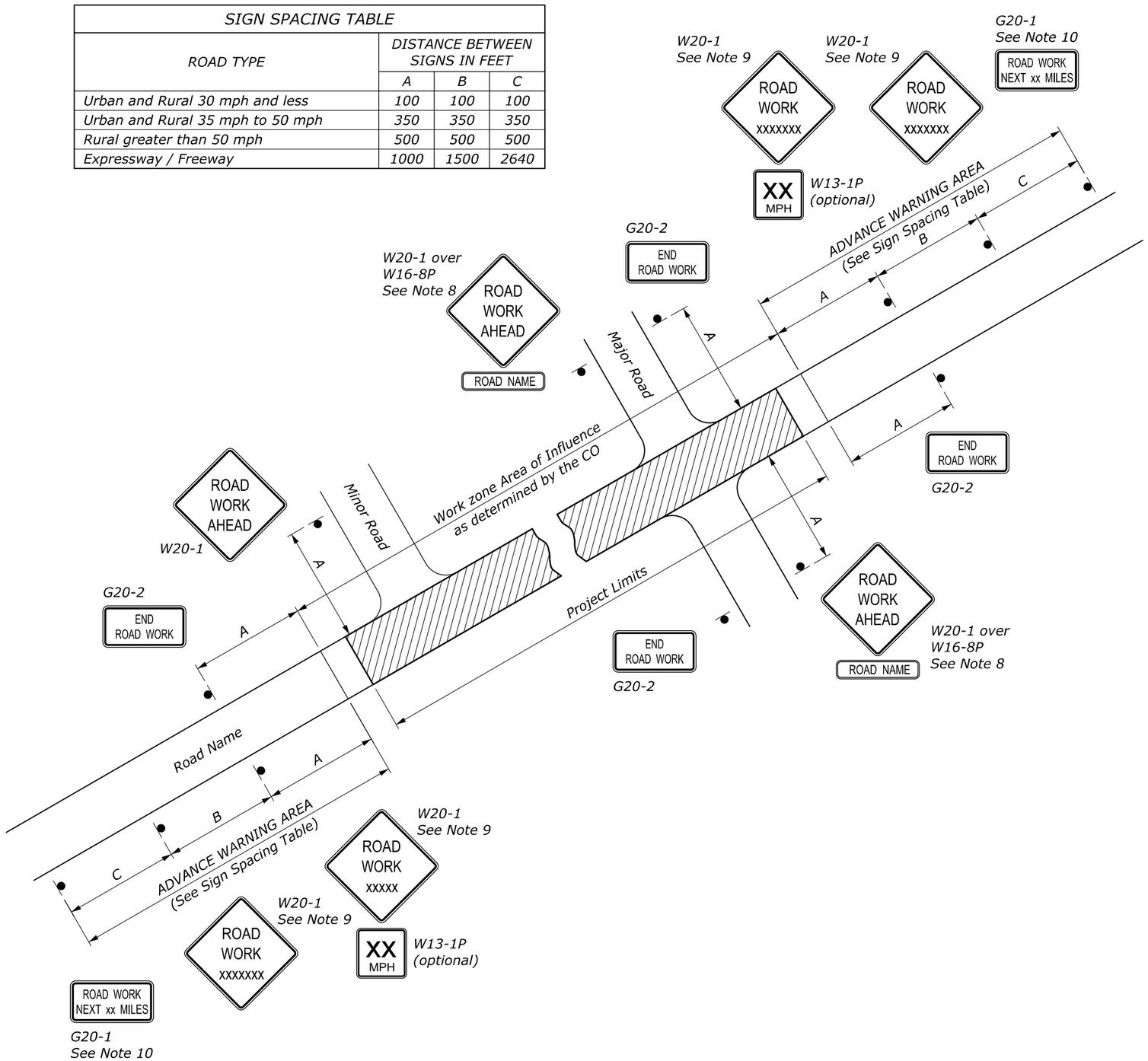

NOTE:

1. Erect all project advance warning signs before starting construction work.
2. Not all details shown on the temporary traffic control sheets may be applicable to this project. The Contractor may add or delete information and details in this traffic control plan as necessary to accommodate actual operations.
3. Where advance warning signs, placed as shown, interfere with permanent signs, locate the warning signs to fit field conditions as approved. Vary messages as required.
4. Install advisory speed plaques under the W20 series warning signs as needed to indicate a maximum recommended speed through the construction area.
5. Ensure all sign supports exposed to traffic are crashworthy.
6. Maintain two-way traffic during all non-work hours except as approved.
7. Do not store traffic control devices along the roadway when not in use. Cover post-mounted signs when not applicable.
8. If W20-1 is placed on a roadway other than that on which the actual construction work occurs, include a supplementary plaque indicating the name of the road on which the construction does occur (applies to major roads only).
9. The message on the W20-1 signs may be ROAD WORK AHEAD or may specify the distance to the work area in feet or in miles. Install an additional W20-1 sign when approach speeds exceed 50 mph. When used, place the two W20-1 signs "B" feet apart according to the Sign Spacing Table.
10. For work zones that are 2 miles or more in length, install G20-1 signs at each end of the project. Show the distance on the G20-1 sign to the nearest whole mile.
11. If signing on a roadway under a jurisdiction other than the client agency, verify that an encroachment permit has been obtained.
12. State standards may be used as an alternative if approved.

NO SCALE

U.S. DEPARTMENT OF TRANSPORTATION, FHWA OFFICE OF FEDERAL LANDS HIGHWAY	FLH STANDARD 635-1
TEMPORARY TRAFFIC CONTROL ADVANCE SIGNING	SPECIFICATION FP-24, FP-14
	APPROVED FOR USE 2/2024

27 April 2026 11:24 AM c:\pw_work_cfhdms\14309\Std635-1.dgn [Std 635-1]

NOTE:

1. To substitute raised pavement markers for lines, use the following patterns:

   2 ft broken line: two pavement markers spaced 2 ft apart allowed by the gap shown based on curvature.

   Single solid line: pavement markers spaced on 10 ft centers.

   Double solid line: two pavement markers, side by side, spaced on 10 ft centers.

2. On two- or three-lane roads, signs may be used instead of temporary pavement markings as shown on Standard 635-3.

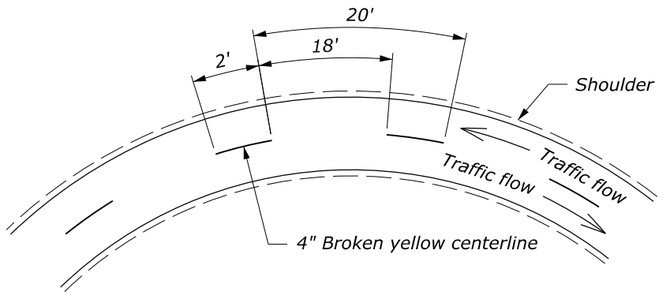

DETAIL A1
Passing zone both directions
Two-way traffic

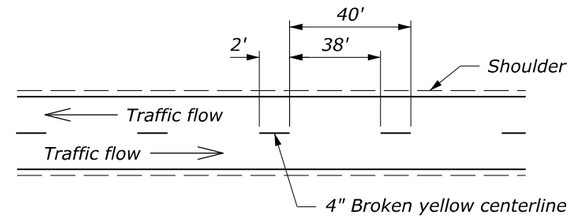

DETAIL B1
Passing zone both directions
Two-way traffic

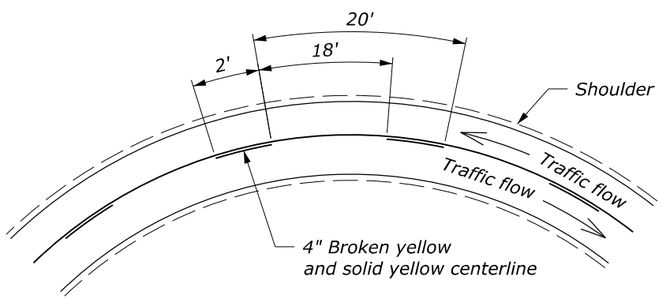

DETAIL A2
No passing zone one direction
Two-way traffic

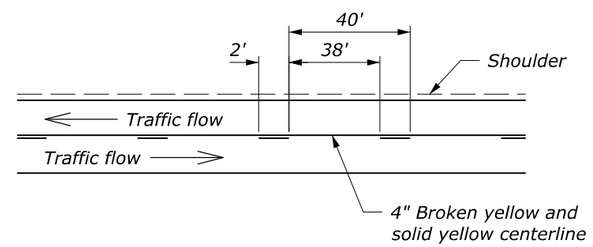

DETAIL B2
No Passing zone one direction
Two-way traffic

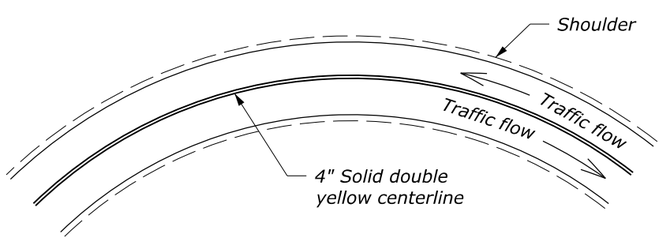

DETAIL A3
No passing zone both directions
Two-way traffic

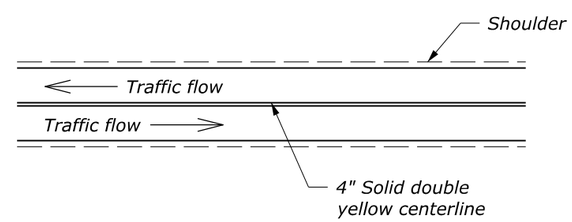

DETAIL B3
No Passing zone both directions
Two-way traffic

DETAIL A
Curves < 500' Radius

DETAIL B
Tangents or Curves ≥ 500' Radius

NO SCALE

U.S. DEPARTMENT OF TRANSPORTATION, FHWA
OFFICE OF FEDERAL LANDS HIGHWAY

TEMPORARY PAVEMENT MARKINGS

FLH STANDARD 635-2
SPECIFICATION FP-24, FP-14
APPROVED FOR USE 2/2024

c:\pw_work_cfl\dms14309\Std635-2.dgn [Std 635-2]
27 April 2026 11:25 AM

PROJECT	SHEET NUMBER
AZ NP GRCA 14(2)	R.3

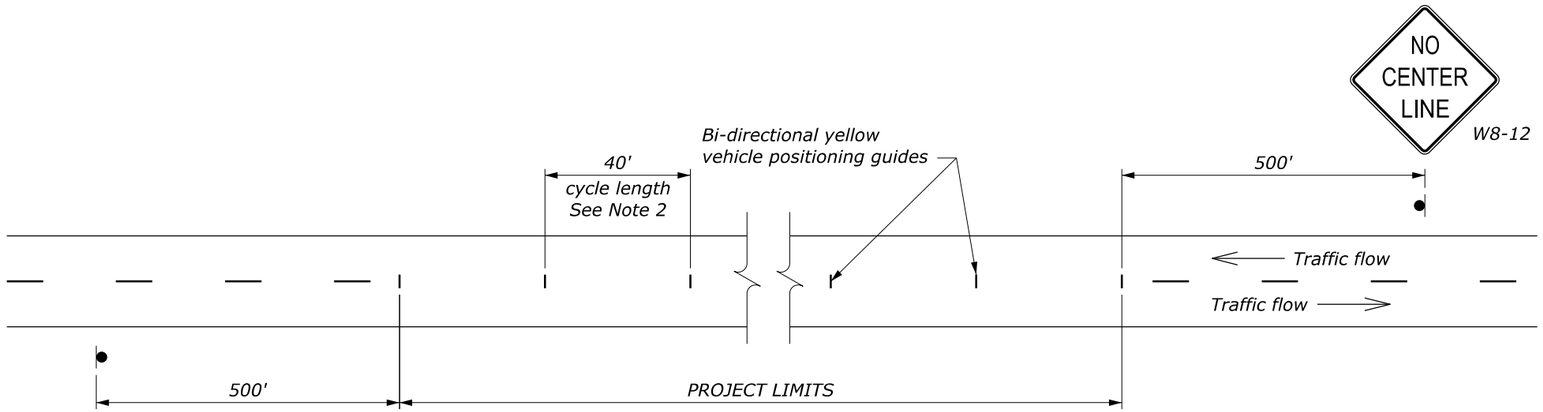

DETAIL A
Passing zone both directions
Two-way traffic

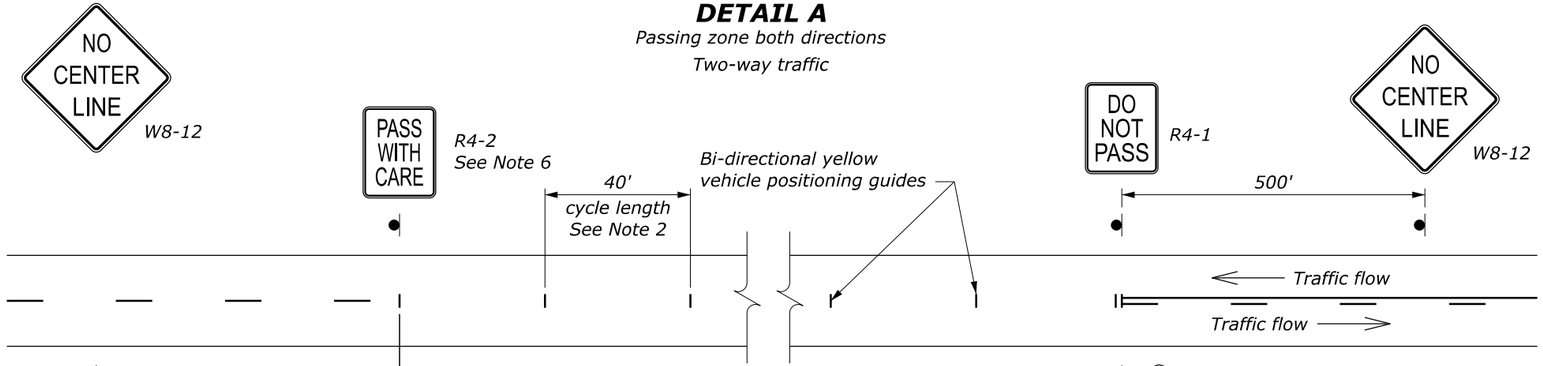

DETAIL B
No Passing zone one direction
Two-way traffic

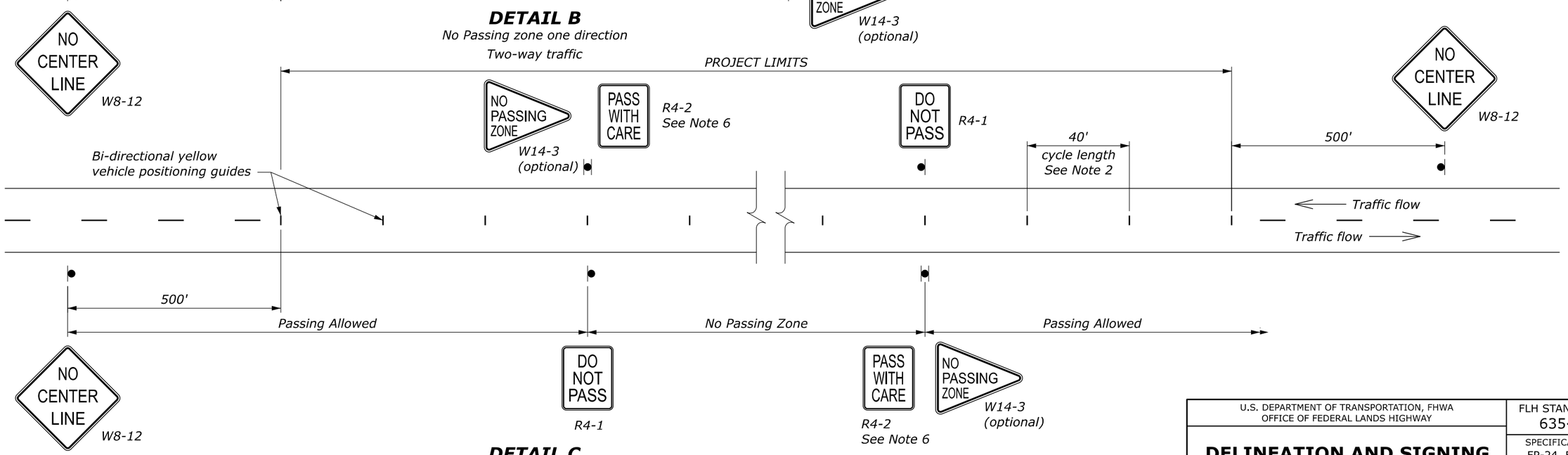

DETAIL C
No Passing zone both directions
Two-way traffic

NO SCALE

NOTE:

1. *The pavement on two- or three-lane roads may remain unmarked up to 14 days when providing signs according to this drawing. Optionally use the vehicle positioning guides to provide additional delineation.*
2. *On curves with radius less than 500 ft, reduce cycle length to 20 ft.*
3. *Use permanent markings plan to determine no passing zones for each direction of travel.*
4. *Repeat R4-1 at 1 mile intervals.*
5. *Repeat W8-12 after each major intersection and every 2 miles for temporary traffic control zones greater than 3 miles long.*
6. *Use the PASS WITH CARE (R4-2) sign at the downstream end of a no-passing zone only if a DO NOT PASS (R4-1) sign has been installed at the upstream end of the zone.*

U.S. DEPARTMENT OF TRANSPORTATION, FHWA
OFFICE OF FEDERAL LANDS HIGHWAY

DELINEATION AND SIGNING FOR UNMARKED PAVEMENTS

FLH STANDARD 635-3
SPECIFICATION FP-24, FP-14
APPROVED FOR USE 2/2024

c:\pw_work_cfl\dms14309\Std635-3.dgn [Std 635-3]
1 June 2026 11:16 AM

LENGTH AND SPACING TABLE	
APPROACH SPEED* MPH	BUFFER SPACE LENGTH FEET
20	115
25	155
30	200
35	250
40	305
45	360
50	425
55	495
60	570
65	645
70	730

* Approach speed based on the regulatory posted speed, not the advisory speed.

SIGN SPACING TABLE			
ROAD TYPE	DISTANCE BETWEEN SIGNS IN FEET		
	A	B	C
Urban and Rural 30 mph and less	100	100	100
Urban and Rural 35 mph to 50 mph	350	350	350
Rural greater than 50 mph	500	500	500
Expressway / Freeway	1000	1500	2640

NOTE:

1. Signs are shown for one direction of travel only. Place signs similar to those depicted for the opposite direction of travel.
2. Final location and spacing of devices may be changed to fit field conditions as approved.
3. For pilot car operation, mount the PILOT CAR FOLLOW ME (G20-4) sign at a conspicuous location on the rear of vehicle. Prominently display the name of the Contractor on the pilot car.
4. If closure is completely within the project limits, eliminate the ROAD WORK AHEAD (W20-1) and END ROAD WORK (G20-2) signs.
5. Do not allow equipment, materials, or vehicles to be parked or stored in the buffer space.

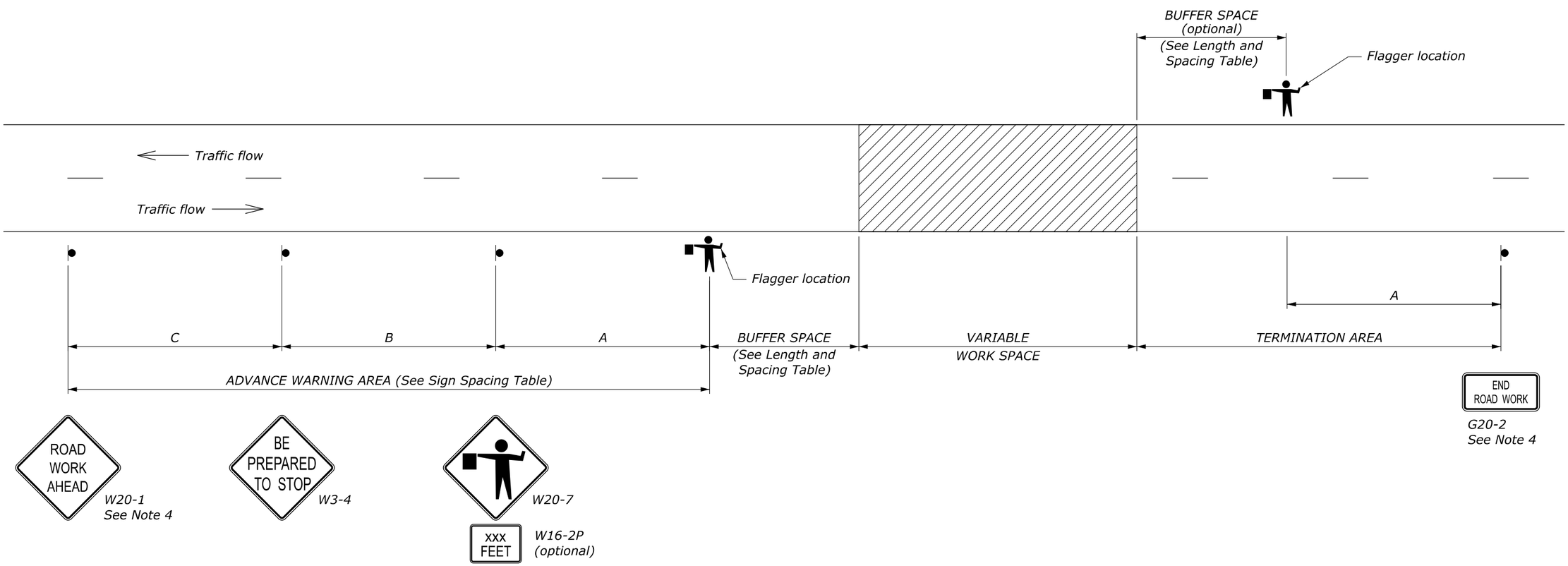

NO SCALE

U.S. DEPARTMENT OF TRANSPORTATION, FHWA
OFFICE OF FEDERAL LANDS HIGHWAY

TEMPORARY TRAFFIC CONTROL ROAD CLOSURE LAYOUT (WITH FLAGGERS)

FLH STANDARD 635-5

SPECIFICATION FP-24, FP-14

APPROVED FOR USE 2/2024

c:\pw_work_cfl\dms14309\Std635-5.dgn [Std 635-5]
1 June 2026 11:16 AM

LENGTH AND SPACING TABLE				
APPROACH SPEED* MPH	BUFFER SPACE LENGTH FEET	CHANNELIZING DEVICE SPACING IN FEET		
		TAPER AREA	BUFFER SPACE	WORK SPACE
20	115	20	40	40
25	155	20	50	50
30	200	20	60	60
35	250	20	70	70
40	305	20	80	80
45	360	20	90	90
50	425	20	100	100
55	495	20	110	110
60	570	20	120	120
65	645	20	130	130
70	730	20	140	140

* Approach speed based on the regulatory posted speed, not the advisory speed.

SIGN SPACING TABLE			
ROAD TYPE	DISTANCE BETWEEN SIGNS IN FEET		
	A	B	C
Urban and Rural 30 mph and less	100	100	100
Urban and Rural 35 mph to 50 mph	350	350	350
Rural greater than 50 mph	500	500	500
Expressway / Freeway	1000	1500	2640

NOTE:

1. Signs are shown for one direction of travel only. Place signs similar to those depicted for the opposite direction of travel.
2. Final location and spacing of devices may be changed to fit field conditions as approved.
3. For pilot car operation, mount the PILOT CAR FOLLOW ME (G20-4) sign at a conspicuous location on the rear of vehicle. Prominently display the name of the Contractor on the pilot car.
4. If closure is completely within the project limits, eliminate the ROAD WORK AHEAD (W20-1) and END ROAD WORK (G20-2) signs.
5. For project specific minimum width, refer to the Contract Requirements.
6. Do not allow equipment, materials, or vehicles to be parked or stored in the buffer space.

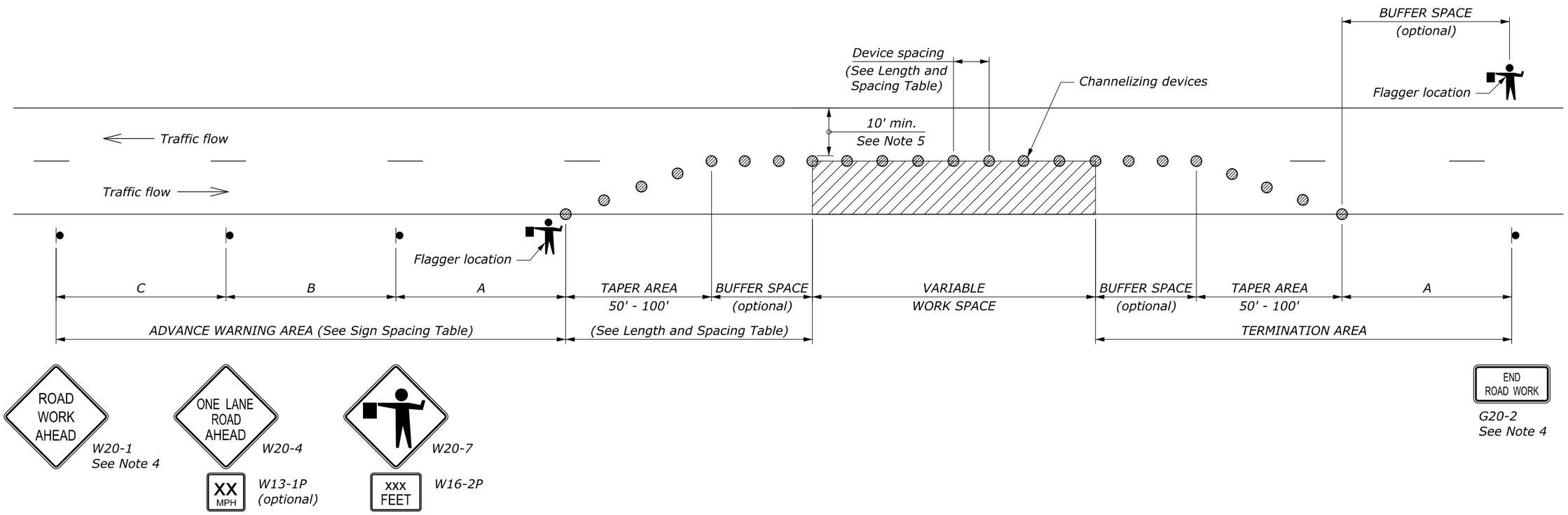

NO SCALE

U.S. DEPARTMENT OF TRANSPORTATION, FHWA
OFFICE OF FEDERAL LANDS HIGHWAY

TEMPORARY TRAFFIC CONTROL SINGLE LANE CLOSURE LAYOUT (WITH FLAGGERS)

FLH STANDARD 635-6

SPECIFICATION FP-24, FP-14

APPROVED FOR USE 2/2024

c:\pw_work_cflhdms\14309\Std635-6.dgn [Std 635-6]
1 June 2026 11:17 AM

LENGTH AND SPACING TABLE

APPROACH SPEED* MPH	MINIMUM TAPER LENGTH** FEET	BUFFER SPACE LENGTH FEET	CHANNELIZING DEVICE SPACING IN FEET		
			TAPER AREA	BUFFER SPACE	WORK SPACE
20	Shoulder taper formula:	115	20	40	40
25	$L = \frac{WS^2}{180}$ for $S \leq 40$ mph	155	25	50	50
30		200	30	60	60
35	$L = \frac{WS}{3}$ for $S \geq 45$ mph	250	35	70	70
40		305	40	80	80
45	Where:	360	45	90	90
50	L = Minimum length of taper	425	50	100	100
55	W = Width of offset in feet	495	55	110	110
60	S = Numerical value of posted speed limit or 85 percentile speed prior to work in miles per hour	570	60	120	120
65		645	65	130	130
70		730	70	140	140

* Approach speed based on the regulatory posted speed, not the advisory speed.
**Lengthen taper as needed to provide minimum of three channelizing devices in taper at required spacing.

SIGN SPACING TABLE

ROAD TYPE	DISTANCE BETWEEN SIGNS IN FEET		
	A	B	C
Urban and Rural 30 mph and less	100	100	100
Urban and Rural 35 mph to 50 mph	350	350	350
Rural greater than 50 mph	500	500	500
Expressway / Freeway	1000	1500	2640

NOTE:

1. Final location and spacing of devices may be changed to fit field conditions as approved.
2. For project specific minimum width, refer to Contract Requirements.
3. If shoulder closure is completely within the project limits, eliminate the ROAD WORK AHEAD (W20-1) and END ROAD WORK (G20-2) signs.
4. Do not allow equipment, materials, or vehicles to be parked or stored in the buffer space.

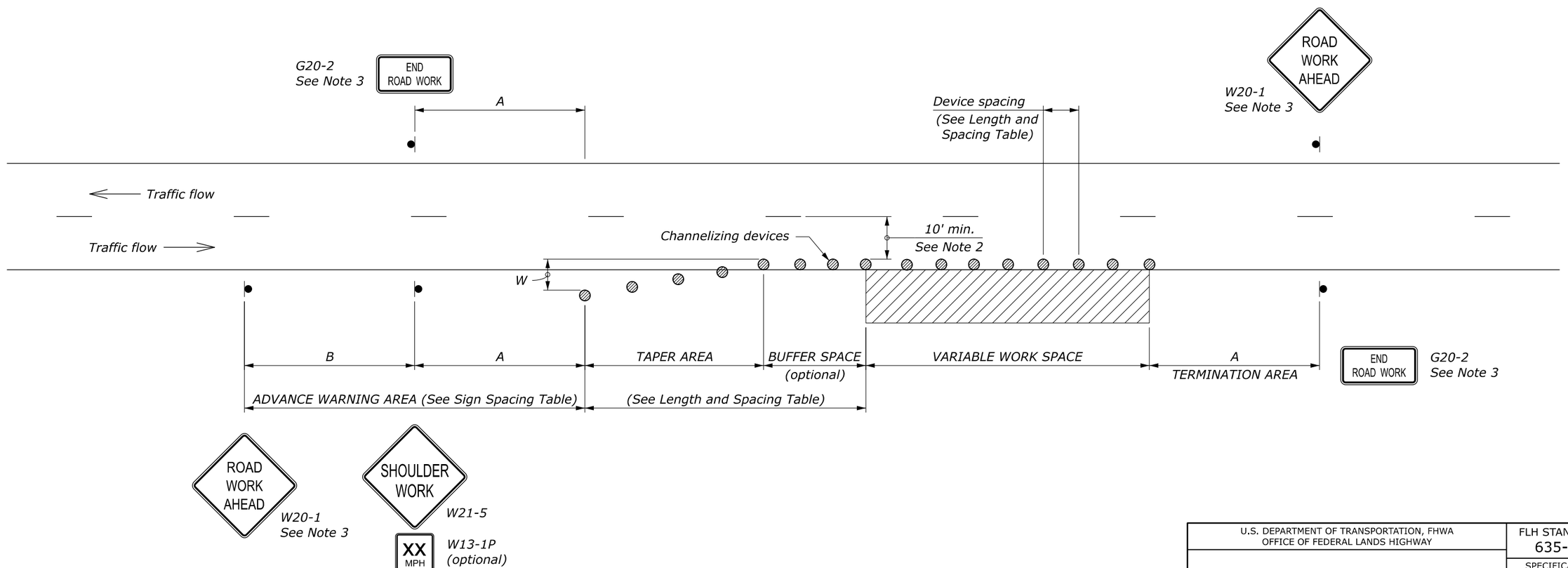

NO SCALE

U.S. DEPARTMENT OF TRANSPORTATION, FHWA OFFICE OF FEDERAL LANDS HIGHWAY	FLH STANDARD 635-10
TEMPORARY TRAFFIC CONTROL SHOULDER CLOSURE LAYOUT	SPECIFICATION FP-24, FP-14
	APPROVED FOR USE 2/2024

c:\pw_work_cfl\dms14309\Std635-10.dgn [Std 635-10]
1 June 2026 11:17 AM

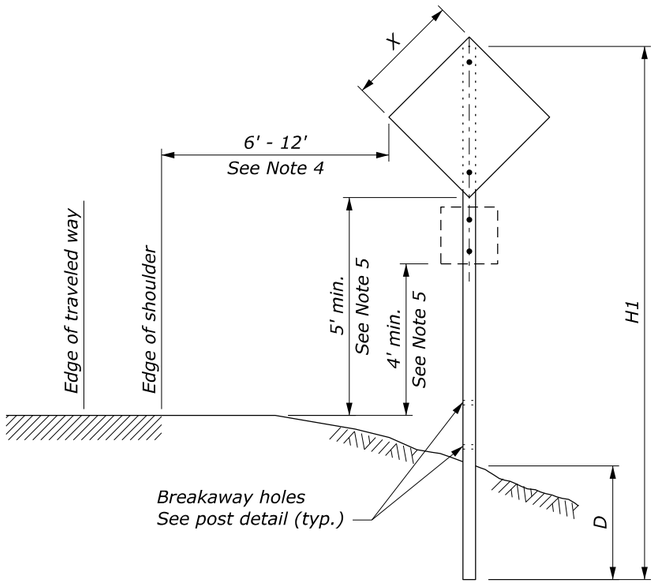

SINGLE POST SIGN

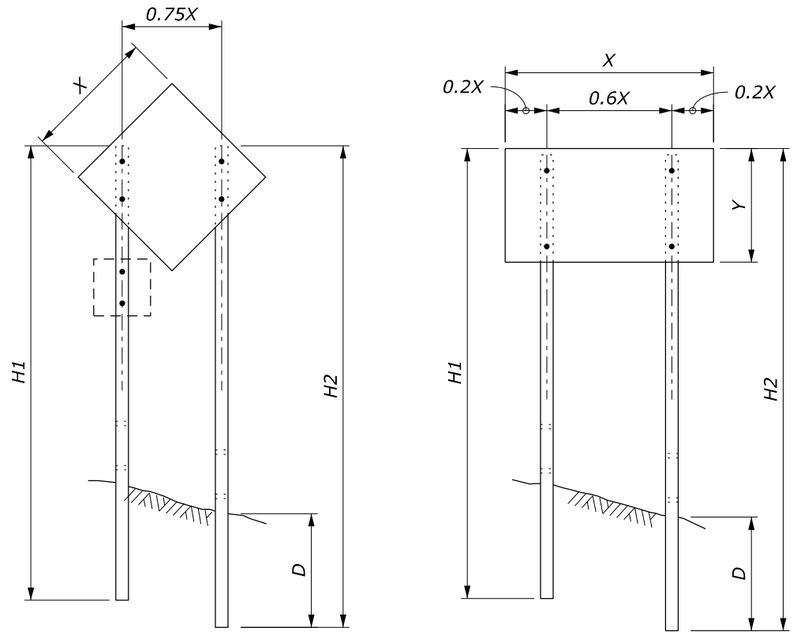

TWO POST SIGN

NOTE:

1. Attach sign panels with a minimum of two ¼" diameter bolts per post.
2. H1 and H2 = Overall post length. Select post lengths to fit field conditions.
3. D = Post embedment depth for average soil conditions.
4. In areas where lateral distance is limited, a minimum lateral offset of 2 ft may be used. In areas with curbs, a minimum lateral distance of 1 ft behind the face of the curb may be used.
5. In pedestrian locations, or in areas with obstructed views, use 7 ft minimum mounting height for main sign and 6 ft minimum mounting height for secondary sign.
6. Use 7 ft minimum spacing between posts for sign posts 6" x 6" or larger.
7. State standards may be used as an alternative if approved.

WOOD POST SELECTION TABLE

WIDTH "X"	AREA (SQFT)	NUMBER OF POSTS	POST SIZE (INCH)	D (INCH)	HOLE SIZE (INCH)
Diamond ≤ 36" Other Shapes ≤ 48"	< 10	1	4 x 4	36	0
		1	4 x 6	48	1.5
Diamond ≤ 48"	10 - 20	1	6 x 6	48	2
Diamond ≤ 48" Other Shapes ≤ 12'	10 - 20	2	4 x 4	36	0
	20 - 50	2	4 x 6	48	1.5
> 13'	50 - 65	2	6 x 6	48	2
12' - 16'	50 - 65	3	4 x 6	48	1.5
> 17'	65 - 95	4	4 x 6	48	1.5
> 30'	65 - 95	3	6 x 6	48	2

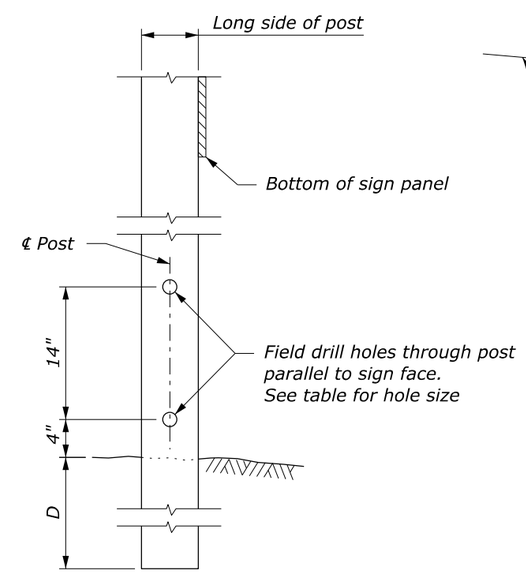

POST DETAIL

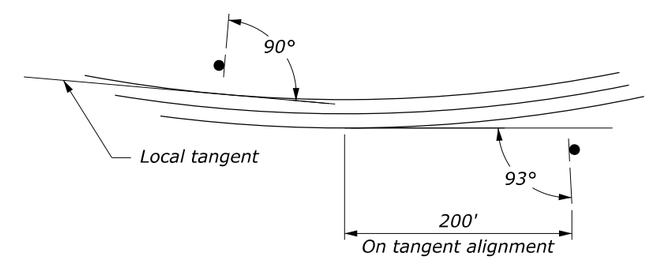

SIGN INSTALLATION ANGLE

NO SCALE

U.S. DEPARTMENT OF TRANSPORTATION, FHWA
OFFICE OF FEDERAL LANDS HIGHWAY

TEMPORARY TRAFFIC CONTROL SIGN INSTALLATION WOOD POSTS

FLH STANDARD 635-14

SPECIFICATION FP-24, FP-14

APPROVED FOR USE 2/2024

c:\pw_work_cfl\dms14309\Std635-14.dgn [Std 635-14]
27 April 2026 11:29 AM