REVISIONS						
ZONE	REV	DESCRIPTION	DATE	DWN	CK	ENGR
ALL	-	1. 11-11-1999 INITIAL PRELIMINARY ISSUE. ADDED NAVSEA DWG NUMBER. ADDED BLADE FLANGE DETAILS. INCORPORATED CN-015-01, CN-031-01, CN-071-02 AND CN-061-03. 12-15-2003 RETURNED TO REV "-" (ALL SHEETS. REVISION STATUS CHANGED.	04-14-04	JAE	WJC	JAE
B8 ALL C1	A	1) UPDATED NOTE 1015 TO REFERENCE GAGE DRAWING. REMOVED INFO. 2) UPDATED SHEET FORMAT 3) UPDATED REVISION STATUS OF SHEETS INCORPORATES CN-072-23	1/8/26	ZJH	JOY 1/13/26	RTD 1/13/26

NOTES

GENERAL

1001. PROPELLER BLADE IS RIGHT HAND AS DRAWN, LEFT HAND OPPOSITE.

1002. PROPELLER BLADE IS SUITABLE FOR LPD-17 CLASS.

1003. UNLESS OTHERWISE SPECIFIED OR INDICATED, ALL DIMENSIONS, COORDINATES, AND GAGING REQUIREMENTS ARE REFERENCED TO A PROPELLER BLADE SET AT DESIGN AHEAD PITCH.

1004. FOR THE PURPOSES OF DEFINITION, THE FOLLOWING CARTESIAN COORDINATE SYSTEM SHALL BE USED:
A) THE "X" AXIS IS COINCIDENT WITH THE PROPELLER SHAFT AXIS (SEE NOTE 1007).
B) THE "Y" AXIS IS COINCIDENT WITH THE BLADE SPINDLE AXIS (SEE NOTE 1006).
C) THE "Z" AXIS IS MUTUALLY PERPENDICULAR TO THE X AND Y AXES.
D) THE ORIGIN "O" OCCURS AT THE COMMON INTERSECTION OF THE X, Y, AND Z AXES.
E) SIGN CONVENTIONS ARE AS FOLLOWS FOR RIGHT HAND BLADE, LOOKING FORWARD:
X IS POSITIVE FORWARD OF THE ORIGIN, NEGATIVE AFT OF THE ORIGIN; Y IS ALWAYS POSITIVE.
Z IS POSITIVE TOWARDS LEADING EDGE, NEGATIVE TOWARDS TRAILING EDGE.

1005. FOR PURPOSES OF DEFINITION, THE FOLLOWING CYLINDRICAL COORDINATE SYSTEM SHALL BE USED:
A) THE RADIUS VECTOR "R" FOR ANY POINT IS THE PERPENDICULAR FROM THE X AXIS TO THAT POINT. A TRUE VIEW OF "R" IS OBTAINED IN THE Y-Z PLANE OR ANY PLANE PARALLEL TO THE Y-Z PLANE.
B) THE ANGLE "θ" (THETA) IS THE ANGLE BETWEEN THE RADIUS VECTOR "R" AND THE "Y" AXIS.
C) X, Y, AND Z HAVE THE SAME MEANING AS IN NOTE 1004.
D) SIGN CONVENTIONS ARE AS FOLLOWS FOR A RIGHT HAND BLADE, LOOKING FORWARD: R IS ALWAYS POSITIVE: THETA IS POSITIVE WHEN R IS ROTATED CLOCKWISE FROM THE Y AXIS, NEGATIVE WHEN R IS ROTATED COUNTERCLOCKWISE; X IS POSITIVE FORWARD OF THE ORIGIN, NEGATIVE AFT OF THE ORIGIN.
E) THE FOLLOWING RELATIONSHIPS EXIST BETWEEN THE CARTESIAN COORDINATES AND THE CYLINDRICAL COORDINATES:

CARTESIAN COORDINATES		CYLINDRICAL COORDINATES
X	=	X
Y	=	R COS θ
Z	=	R SIN θ
$Y^2 + Z^2$	=	R^2

1006. THE BLADE SPINDLE AXIS IS DEFINED AS THE PERPENDICULAR TO THE (FLAT) UNDERSIDE OF THE FLANGE ("HUB ATTACHMENT FACE") AT ITS CENTER. THE FLANGE CENTER IS DEFINED AS A POINT MIDWAY BETWEEN THE TWO DOWEL HOLES IN THE FLANGE. THE BLADE SPINDLE AXIS IS THE "Y" AXIS (SEE NOTE 1004).

1007. FOR PURPOSES OF MACHINING AND GAGING THE BLADE, THE SHAFT AXIS IS A LINE INTERSECTING WITH AND PERPENDICULAR TO THE BLADE SPINDLE AXIS (SEE NOTE 1006), AND AT A PERPENDICULAR DISTANCE OF 21.103 INCHES FROM THE UNDERSIDE OF THE FLANGE (SEE SECTION 67-B, SHEET 9). THE SHAFT AXIS IS THE "X" AXIS (SEE NOTE 1004). FOR PURPOSES OF DEFINITION, THE SHAFT AXIS, PROPELLER CENTER LINE, HUB AXIS, AND X AXIS ARE IDENTICAL.

1008. FOR PURPOSES OF DEFINITION THE FOLLOWING COORDINATE SYSTEM SHALL BE USED TO DESIGNATE EXPANDED (FLATTENED, CONSTANT RADIUS) SECTIONS ORIENTED AT DESIGN PITCH:
A) THE QUANTITY $\breve{Z}$ ("ZEE ARC") IS EQUAL TO THE PRODUCT OF THE RADIUS, R AND THE ANGLE, THETA (θ) WHERE THETA IS MEASURED IN RADIANS, I.E., $\breve{Z}$ = R X θ (RADIANS)
B) THE QUANTITY "X" HAS THE SAME MEANING AS IN NOTES 1004 AND 1005.
C) AN EXPANDED SECTION (OR EXPANDED VIEW OF A PITCH HELIX) AT DESIGN PITCH IS AN "X" VS "$\breve{Z}$" PLOT WITH X VERTICAL AND $\breve{Z}$ HORIZONTAL ON THE PAPER.

1009. ANY STRAIGHT LINE IN AN X-$\breve{Z}$ PLOT IS A HELIX IN TRUE SPACE, AND VICE-VERSA. THE GEOMETRIC PITCH ANGLE, BETA ($\breve{\beta}$). (CALLED ALPHA IN NAVSEA S9245-AP-TSM-010/PROP) IS THE ACUTE ANGLE BETWEEN THE PITCH HELIX AND THE $\breve{Z}$ AXIS IN AN X-$\breve{Z}$ PLOT.

1010. SKEW AT ANY RADIUS IS DEFINED AS FOLLOWS (DETAIL 55-C SHEET 7):
$\breve{S} = -\breve{Z}_K/(\text{COSINE } (\breve{\beta}))$.
WHERE:
$\breve{S}$ = EXPANDED SKEW, MEASURED IN INCHES,
$\breve{Z}_K$ = THE $\breve{Z}$ COORDINATE OF THE PITCH HELIX MID-CHORD, AND
$\breve{\beta}$ = PITCH ANGLE AS DEFINED IN NOTE 1009.

1011. THE BLADE GEOMETRY IS SPECIFIED, IN PART, IN TERMS OF REQUIREMENTS AT DISCRETE INTERVALS OF FRACTIONAL RADIUS. USING THIS CARTESIAN COORDINATE DATA DIRECTLY, INTERPOLATION OF INTERMEDIATE DATA POINTS AS WELL AS SHAPE DEFINITION SHALL BE ACCOMPLISHED USING SPLINES OR MATHEMATICAL SPLINE FUNCTIONS WHICH ARE CONTINUOUS IN POSITION, TANGENCY AND CURVATURE.

1012. THE HUB ON WHICH THE PROPELLER BLADES ARE TO BE MOUNTED IS A BARREL-SHAPED BODY OF REVOLUTION HAVING A MAXIMUM DIAMETER WHICH IS APPROXIMATELY 25.7% OF THE PROPELLER DIAMETER. THEREFORE, THE FILLETS AND OTHER ASPECTS OF BLADE GEOMETRY ARE BASED ON A ROOT SECTION DEFINED AS THE 0.257 FRACTIONAL RADIUS.

1013. LEADING EDGE FAIRING RADII (LEFR) ARE NOT SPECIFIED IN THE TABLE OF OFFSETS. IN THEIR PLACE ARE GIVEN ADDITIONAL CHORD STATIONS AND THE CORRESPONDING OFFSETS AT EACH RADIUS, SEE TABLE 21-G, SHEET 3.

1014. THE CYLINDRICAL, EDGE, TIP AND FILLET GAGES SHALL BE DEVELOPED IN ACCORDANCE WITH NAVSEA S9245-AP-TSM-010/PROP "MANUAL OF INSTRUCTIONS FOR DESIGN AND APPLICATION OF MARINE PROPELLER BLADE GAGES", EXCEPT AS NOTED HEREIN. IN CASES OF CONFLICT OR INCONSISTENCIES BETWEEN NAVSEA S9245-AP-TSM-010/PROP AND THIS DRAWING (INCLUDING THESE NOTES), THE DRAWING (INCLUDING THESE NOTES) SHALL HAVE PRECEDENCE AND SHALL GOVERN.

1015. THE FILLET BETWEEN THE BLADE SECTION AND THE BLADE FLANGE SHALL BE DEFINED, DIMENSIONED, AND GAGED IN TERMS OF PLANAR CUTS THROUGH THE BLADE-FLANGE FAIRING SURFACES. THIS IS DEFINED AND DETAILED ON THE PROPELLER GAGE DRAWING (REFERENCE 1). A1

1016. IN FORMING THE BLADE FILLETS, THE 3T FILLET HAS BEEN INCLUDED IN THE DEFINITION OF THE BLADE SECTIONS AT THE ROOT. THE FAIRING FILLET RADIUS HAS BEEN CREATED AS A FAIR FILLET RADIUS BETWEEN THE BLADE SURFACE AND THE PALM UPPER SURFACE WITH A MINIMUM RADIUS OF CURVATURE OF 1 INCH.

1017. THE LOWER SECTION OF THE BLADE TRAILING EDGE IS DEFINED BY TWO PLANES AND A CYLINDER THROUGH THE BLADE FLANGE O.D.. SEE DETAIL 50-B AND 50-D SHEET 7. ONE PLANE DEFINING THE BOTTOM SURFACE IS THROUGH THE FOLLOWING THREE POINTS:

X	Y	Z
-7.8556	23.5168	9.7630
-10.4614	24.3296	6.8987
-12.9860	22.3305	11.7134

THIS PLANE IS BLENDED INTO THE FLANGE O.D. CYLINDER WITH A 1/2" FILLET RADIUS. THE TRAILING EDGE IS TRUNCATED BY A PLANE THROUGH THE FOLLOWING THREE POINTS:

X	Y	Z
-13.2574	27.4915	11.7745
-12.4253	22.7745	10.6440
-11.8167	23.6009	11.2688

1018. TO REDUCE AMBIGUITY "OFFSET STATIONS" J, K, L AND M REPRESENT POSITIONS ON THE PITCH HELIX AND BLADE FACES CORRESPONDING TO 40, 50, 60 AND 70 PERCENT CHORD, RESPECTIVELY AS SHOWN IN ZONE 34-B ON SHEET 5. "GAGING POINTS" J, K, L AND M ARE POINTS ON THE CYLINDRICAL GAGES AS SHOWN IN FIGURE 4-1 OF NAVSEA S9245-AR-TSM-010/PROP.

1019. COORDINATES GIVEN IN TABLES ON THIS DRAWING REPRESENT A BLADE HAVING NOMINAL (DESIGN) VALUES OF PITCH, RAKE, SKEW, CHORDLENGTH, OFFSETS AND FLANGE DIMENSIONS.

1020. CERTIFIED PROPELLER INSPECTION GAGES SHALL BE USED FOR FINAL INSPECTION. INSPECTION GAGES PROVIDED BY THE GOVERNMENT SHALL BE VISUALLY INSPECTED BY THE PROPELLER MANUFACTURER PRIOR TO USE. INSPECTION GAGES SHALL NOT BE USED FOR ANY MANUFACTURING PROCESS.

1021. THE PROPELLER FINAL INSPECTION REPORT MUST BE APPROVED BY NAVSEA AND A CERTIFICATION DOCUMENT SIGNED BY A QUALIFIED PERSON PRIOR TO RELEASE OF THE PROPELLER FROM THE PROPELLER MANUFACTURER.

MANUFACTURING

2001. ALL DIMENSIONS ARE IN INCHES UNLESS OTHERWISE STATED.

2002. ALL THREADS, UNLESS OTHERWISE NOTED, SHALL BE RIGHT HAND AND SHALL CONFORM TO FEDERAL STANDARD H28 "SCREW THREAD STANDARDS FOR FEDERAL SERVICES".

2003. BLADES MAY BE MANUFACTURED BY MANUAL METHODS, NUMERICALLY CONTROLLED MACHINING, OR A COMBINATION THEREOF.

2004. SURFACE FINISH ON THE BLADE FACES, LEADING AND TRAILING EDGES, FILLETS AND TOP OF FLANGE SHALL HAVE A VISUAL ROUGHNESS RATING NOT EXEEDING 63 R_a MICRO-INCHES. FINISH REQUIREMENTS FOR THE REMAINDER OF THE FLANGE ARE GIVEN IN SECTION 67-B AND DETAIL 71-D ON SHEET 9. THE ALLOWABLE MAGNITUDE AND CONCENTRATION OF SURFACE DEFECTS ARE SPECIFIED BY NOTES 2005 AND 5012.

2005. FOR THE HUB-ATTACHMENT FACE, SECTION 67-B, ON SHEET 9, THERE IS A SPECIAL SURFACE REQUIREMENT FOR AN ANNULAR RING AREA, 23 7/8 OD BY 22 7/8 ID. THIS AREA FORMS A SEAL AGAINST AN O-RING IN THE ASSEMBLED HUB. SURFACE FLAWS AND POROSITY GREATER THAN 1/64 INCH DIAMETER MUST BE WELD REPAIRED, EVEN THOUGH SUCH FLAWS MAY BE OTHERWISE ACCEPTABLE UNDER THE REQUIREMENTS OF NOTE 5012.

2006. NO WELD REPAIRS SHALL BE ACCOMPLISHED AS A PART OF THE MANUFACTURING PROCEDURE WITHOUT THE PRIOR APPROVAL OF NAVSEA OR ITS DESIGNEES. PROCEDURES FOR WELD REPAIR AND OPERATORS CARRYING OUT THOSE PROCEDURES SHALL BE QUALIFIED UNDER DOD-STD-2185.
THE LOCATION AND SIZE OF ALL WELD REPAIRS AND GRADE OF FILLER SHALL BE DOCUMENTED AND REPORTED TO NAVSEA. WELDING MATERIAL (ROD OR WIRE) USED IN REPAIR OR STRUCTURAL WELDING SHALL CONFORM TO NAVSEA S9074-AQ-G1B-010-278.
BARE RODS AND ELECTRODES SHALL CONFORM TO NAVSEA S9074-AQ-G1B-010-278, GROUP A37B (AWS CLASS, ERCUNIAL, AMPCOTRODE 46). PROVIDED PRIOR APPROVAL FOR SUCH USE HAS BEEN OBTAINED FROM NAVSEA; GROUP A36B (AWS CLASS, ERCUAL-A2, AMPCOTRODE 10) IS ACCEPTABLE.

IDENTIFICATION AND STAMPING

3001. EACH PROPELLER BLADE FLANGE SHALL BE STAMPED WHERE INDICATED (SEE "TOP VIEW OF BLADE FLANGE", VIEW 67-E ON SHEET 9 WITH THE FOLLOWING INFORMATION IN LETTERS 3/16 INCH HIGH.
A) HEAT NO. _____ (MANUFACTURERS UNIQUE BLADE IDENTIFICATION NUMBER)
B) SERIAL NO._____ (TO BE ASSIGNED BY BUYER)
C) "DWG 245-7622723 REV _"
D) "LPD-17 CLASS"
E) "PORT RH" OR "STBD LH"
F) "192.96 INCH DIA"
G) "RRNMI _____ " (DATE)
H)_____ (NAVSEA CONTRACT NO.)
*I)_____LBS.
J) NSN _____ (TO BE ASSIGNED BY BUYER)
K) "NI-AL BRZ MIL-B-24480A"

* WEIGHT INCLUDES WEIGHT ADDED FOR BALANCING, IF ANY (SEE NOTES 4006 AND 4007).
THE CONTRACTOR MAY ALSO, AT HIS DISCRETION, STAMP ANY OF THE ABOVE IDENTIFYING NUMBERS AND/OR HIS OWN IDENTIFYING NUMBERS ON THE FLAT SURFACE OF THE TRAILING EDGE OVERHANG AT THE ROOT (SEE NOTE 1017). SUCH MARKING SHALL BE IN ADDITION TO, AND NOT A SUBSTITUTE FOR, THE STAMPING SPECIFIED ABOVE AND MAY BE LEFT PERMANENTLY WHERE STAMPED.

3002. THE FOUNDRY HEAT NUMBER SHALL BE MAINTAINED THROUGH ALL OF PROCESSING.

3003. IN ADDITION TO THE SERIAL NO. (SEE NOTE 3001B), EACH BLADE IN A SET OF FIVE SHALL BE STAMPED WITH A SEQUENCE NUMBER WHICH DENOTES THE RELATIVE POSITION OF THE BLADES ON A HUB. THE SENSE OF PROGRESSION OF THE SEQUENCE NUMBER SHALL BE COUNTER TO THE DIRECTION OF ROTATION, LOOKING FORWARD.

CONTINUED ON SHEET 2

A	A	A	A	
SHT 6	SHT 7	SHT 8	SHT 9	
REVISION STATUS OF SHEETS				

A	A	A	A	A
SHT 1	SHT 2	SHT 3	SHT 4	SHT 5
REVISION STATUS OF SHEETS				

3	————	112558029	PROPELLER BLADE; PP&M AND LONG TERM STORAGE
2	————	112545005	INSTALLATION, BALANCING WEIGHT, PROPELLER BLADE
1	245-7622724	112551003	PROPELLER BLADE GAGE DATA
NO	NAVSEA DWG NO	B-J CO DWG NO	DWG TITLE
REFERENCE DRAWINGS			

UNLESS OTHERWISE SPECIFIED DIMENSIONS ARE IN INCHES BREAK ALL CORNERS 0.005-0.020
TOLERANCES: FRAC ± ——— DECIMALS .X± ——— .XX± ——— .XXX± ——— ANGLES ± ——— SEE NOTES
SURFACE MICRO IN
STANDARDS: ASME Y14.5M-1994 ANSI B46.1 NBS H28

CONTR NO: 97392

APPROVALS		DATE
DRAWN:	JJK	2/19/98
CHECKED:	WJC	11/10/99
APVD ENGR:	JAE	11/10/99
DESIGN APVD:	GPP	11/10/99
APVD FOR PROMT:	JLE	11/11/99

DEPARTMENT OF THE NAVY
NAVAL SEA SYSTEMS COMMAND

PROPELLER BLADE (LPD-17 CLASS)

APPROVAL CATEGORY 1 | CONTRACT N00024-97-C-2202
APPROVED NAVAL SEA SYSTEMS COMMAND OSH DATE
DRAWING NO. 112551001

SIZE	FSCM NO	NAVSEA DRAWING NO.		REV
E	43689	245	7622723	A

SCALE: NONE | EST WT: NOT APPLICABLE | SHEET 1 OF 9

FORM NO 245 7622723 PART 1

N2-F4

REVISIONS						
ZONE	REV	DESCRIPTION	DATE	DWN	CK	ENGR
ALL	A	1) UPDATED SHEET FORMAT INCORPORATES CN-072-23	1/8/26	ZJH	JGY 1/13/26	RTD 1/13/26

NOTES CONTINUED FROM SHEET 1

INSPECTION

4001. AN INSPECTION SYSTEM IN ACCORDANCE WITH MIL-I-45208, INSPECTION SYSTEM REQUIREMENTS, SHALL BE USED FOR INSPECTION OF THE PROPELLERS AND ASSOCIATED ACCESSORIES.

4002. THE FINAL DIMENSIONAL INSPECTION REPORT FOR THE PROPELLER SHALL REPRESENT THE FINAL CONDITION OF THE PROPELLER IF BALANCING IS PERFORMED AFTER DIMENSIONAL INSPECTION, THE AREAS AFFECTED BY THE BALANCING MUST BE REINSPECTED.

4003. THE PROPELLER SHALL BE INSPECTED IN ACCORDANCE WITH NAVSEA S9245-AR-TSM-010/PROP. THE REQUIREMENTS FOR INSPECTION OF NEW PROPELLERS SHALL BE MET.

4004. FINAL VISUAL AND DIMENSIONAL INSPECTION RESULTS SHALL BE RECORDED ON NAVSEA FORMS 9245/3 AND 9245/4 OR EQUIVALENT.

4005. LIQUID PENETRANT INSPECTION SHALL BE PERFORMED ON ALL BLADE SURFACES AFTER FINAL METAL REMOVAL ON EACH SURFACE IN ACCORDANCE WITH THE LATEST REVISION OF NAVSEA T9074-AS-GIB-010/271. IF REWORK OF A PARTICULAR AREA IS REQUIRED AFTER LIQUID PENETRANT INSPECTION, ONLY THAT AREA AFFECTED BY THE REWORK OPERATION SHALL BE REQUIRED TO BE LIQUID PENETRANT REINSPECTED.

4006. THE PROPELLER BLADES SHALL BE BALANCED IN ACCORDANCE WITH MIL-STD-167, MECHANICAL VIBRATIONS OF SHIPBOARD EQUIPMENT. THE PROPELLER BLADES SHALL BE STATICALLY (SINGLE PLANE) BALANCED IN GROUPS OF FIVE ON A BALANCING ARBOR/DUMMY HUB MOUNTED ON DYNAMIC BALANCING EQUIPMENT IN ORDER TO INSURE AN ACCURATE STATIC BALANCE. THE ARBOR OR DUMMY HUB SHALL HAVE DOWEL HOLE PATTERNS MATCHING THE DOWEL HOLES IN THE BLADE FLANGE. WHEN BALANCE CORRECTION IS NECESSARY, IT SHALL BE ACCOMPLISHED UTILIZING ONE OF OR A COMBINATION OF THE FOLLOWING METHODS IN DECREASING ORDER OF PREFERENCE:

(A) BLADE LOCATIONS, RELATIVE TO EACH OTHER ON THE HUB, SHALL BE REPOSITIONED TO MINIMIZE THE RESIDUAL UNBALANCE.
(B) LEAD OR BRONZE WEIGHT SHALL BE ADDED TO THE PALM RECESS OF LIGHT BLADES TO MINIMIZE THE RESIDUAL UNBALANCE OF THE BLADE SET. (SEE NOTE 4007)
(C) MATERIAL SHALL BE REMOVED OVER A LARGE AREA AND SHALL NOT CAUSE BLADE DIMENSIONS TO EXCEED ALLOWABLE TOLERANCES OR CLEARANCES IN THE AFFECTED AREA.

4007. WHEN BALANCING IS ACCOMPLISHED BY THE ADDITION OF MASS, THE ADDED MASS SHALL BE SECURED IN THE COUNTERBORE IN THE FLANGE (SEE SECTION 69-B ON SHEET 9).

4008. INSPECTION GAGES SHALL NOT BE USED FOR IN-PROCESS INSPECTION. THEY SHALL BE USED FOR FINAL INSPECTION ONLY. IF IN-PROCESS GAGES ARE TO BE USED, A SEPARATE SET OF GAGES SHALL BE MANUFACTURED AND USED FOR THAT PURPOSE.

4009. THE DATA DOCUMENTATION FOR A BALANCED SET OF FIVE BLADES SHALL INCLUDE, BUT NOT NECESSARILY BE LIMITED TO, THE FOLLOWING ITEMS:
A) THE DATA PACKS FOR EACH OF THE FIVE BLADES.
B) THE MAGNITUDE AND LOCATION OF THE STATIC COMPONENT OF THE RESIDUAL UNBALANCE.
C) POSITION OF EACH BLADE, BLADE IDENTIFICATION NUMBERS, WEIGHT ADDITIONS TO BALANCE CAVITY.

TOLERANCES

5001. TOLERANCES ARE NOT CUMULATIVE. WHERE TWO OR MORE TOLERANCES CONFLICT, THE CLOSER TOLERANCE SHALL GOVERN. UNLESS OTHERWISE SPECIFIED, THE TOLERANCE ON ALL DIMENSIONS SHALL BE AS FOLLOWS:

RANGE OF DIMENSION	FOR DECIMAL DIMENSIONS	FOR FRACTIONAL DIMENSIONS
6 INCHES OR LESS	±.01	1/32
OVER 6 INCHES	±.02	3/64
OVER 24 INCHES	±.03	1/16
OVER 36 INCHES	±.03	5/64
ANGULAR DIMENSIONS	± 30′	± 1°

5002. THE DRILL JIG OR MASTER PLATE USED FOR THE DOWEL HOLES AND BLADE BOLT HOLES (SEE SHEET 9) SHALL BE MACHINED TO AN ACCURACY OF PLUS OR MINUS 0.003 INCH OF THE THEORETICAL LOCATION OF EACH HOLE CENTER WITH RESPECT TO EACH OTHER HOLE CENTER.

5003. PROPELLER BLADE RADIUS SHALL BE 96.48 INCHES, PLUS ZERO MINUS 0.50 INCHES.

5004. FOR EACH INDIVIDUAL BLADE, THE PITCH AT EACH GAGING RADIUS SHALL BE DETERMINED WITH THE PRESSURE FACE CYLINDRICAL GAGES APPLIED IN ACCORDANCE WITH REF 1 BY MEASURING AND RECORDING THE X COORDINATE OF GAGING POINTS J AND K. THE PROPELLER BLADE INSPECTION REPORT SHALL CONTAIN THE ORIGINAL DATA FROM WHICH THE X COORDINATES OF GAGING POINTS J AND K ARE COMPUTED. THE MAXIMUM DEVIATION OF PITCH FROM DESIGN SHALL NOT EXCEED PLUS OR MINUS 1.5% OF THE DESIGN PITCH AT THE RADIUS BEING MEASURED. THE DIFFERENCE BETWEEN THE VARIATION OF PITCH FROM DESIGN AT ADJACENT GAGING RADII SHALL NOT EXCEED 3/4%. THE ARITHMETIC AVERAGE OF THE DEVIATION OF PITCH FROM DESIGN AT ALL GAGING RADII SHALL NOT EXCEED PLUS OR MINUS 1% FOR ANY BLADE.

5005. BLADE THICKNESS TOLERANCE AT EACH STATION AT EACH GAGING RADIUS SHALL BE PLUS 0.030 INCH, MINUS 0.090 INCH OR 2.5% OF THE MAXIMUM DESIGN THICKNESS AT EACH BLADE SECTION WHICHEVER IS GREATER.

5006. BLADE SECTION HALF-LENGTHS AT EACH DESIGN RADIUS SHALL BE WITHIN A TOLERANCE OF PLUS 0.26, MINUS 0.26 INCH. THE DIFFERENCE OF THE DEVIATION BETWEEN ADJACENT GAGING RADII SHALL NOT EXCEED 0.10 INCH TO PRESERVE THE FAIRNESS OF THE BLADE OUTLINE.

5007. CYLINDRICAL GAGES SHALL FIT THE PROPELLER BLADE SURFACES WITH A MAXIMUM CLEARANCE OF 0.030 INCH. THE CLEARANCE SHALL NOT VARY AT A RATE GREATER THAN 0.005 INCH IN ONE INCH. THIS FIT MUST BE OBTAINED ON THE PRESSURE AND SUCTION FACE FROM 5 TO 95 PER CENT OF THE BLADE SECTION LENGTH.

5008. LEADING AND TRAILING EDGE GAGES AND THE TIP GAGE SHALL CONTACT THE BLADE EDGE AND PRESSURE OR SUCTION FACE SEPARATELY WITH A MAXIMUM CLEARANCE UNDER THE GAGE OF 0.015 INCH.

5009. EDGES SHALL MEET THE VISUAL TECHNICAL INSPECTION REQUIREMENTS OF NAVSEA S9245-AR-TSM-010/PROP. EDGES SHALL NOT HAVE FLAT SPOTS UNLESS SPECIFICALLY REQUIRED BY DESIGN.

5010. CLEARANCE UNDER FILLET/FLANGE GAGES SHALL NOT EXCEED 0.060 INCH AND SHALL NOT VARY AT A RATE GREATER THAN 0.010 INCH PER INCH.

5011. THE MAXIMUM CLEARANCE UNDER THE STEEL ROD SPECIFIED BY NAVSEA S9245-AR-TSM-010/PROP SHALL NOT EXCEED 0.030 INCH AND SHALL NOT VARY AT A RATE GREATER THAN 0.005 INCH IN ONE INCH.

5012. THE RESULTS OF THE LIQUID PENETRANT INSPECTION SHALL NOT EXCEED THE LIMITS ESTABLISHED IN MIL-STD-2035. SURFACE FINISH ON THE BLADE FACES, LEADING AND TRAILING EDGES, FILLETS AND TOP OF FLANGE SHALL HAVE A ROUGHNESS RATING NOT EXCEEDING 63 Ra MICRO-INCHES.

5013. A SET OF 5 BLADES, AS DEFINED IN NOTE 3003 SHALL HAVE BLADES BALANCED AS A SET ON A DUMMY HUB. THE STATIC COMPONENT OF THE RESIDUAL UNBALANCE SHALL NOT EXCEED 5225 OUNCE-INCHES.

5014. TOLERANCES ON THE POSITION OF EACH BLADE CENTER AXIS DETERMINED BY THE RAKE CALCULATIONS, ARE AS FOLLOWS:

A. THE INTERSECTION OF EACH BLADE CENTER AXIS AT THE AXIS OF ROTATION SHALL BE WITHIN PLUS OR MINUS 0.500 INCHES OF THE DESIGN AXIAL LOCATION. HOWEVER, THE INTERSECTION OF EACH BLADE CENTER AXIS OF ROTATION SHALL NOT VARY AXIALLY FROM THAT OF ANY OTHER BLADE CENTER AXIS BY MORE THAN PLUS OR MINUS 0.250 INCHES.

B. EACH BLADE CENTER AXIS AT THE 0.95 RADIUS SHALL BE WITHIN PLUS OR MINUS 0.960 INCHES OF THE DESIGN AXIAL LOCATION. HOWEVER EACH BLADE CENTER AXIS AT THE 0.95 RADIUS SHALL NOT VARY AXIALLY FROM THAT OF ANY OTHER BLADE CENTER AXIS BY MORE THAN 0.500 INCH.

C. THE ANGULAR SPACING OF BLADE CENTER AXES SHALL BE WITHIN 15 MINUTES.

D. THE AXIAL DISTANCE FROM THE ACTUAL BLADE CENTER AXIS POINTS FOR EACH SECTION TO THE AVERAGE BLADE CENTER AXIS SHALL BE WITHIN PLUS OR MINUS 0.060 INCHES AT EACH DESIGN SECTION. THE VARIATION BETWEEN ADJACENT SECTIONS SHALL NOT EXCEED 0.060 INCHES.

5015. THE SKEW DEVIATION SHALL NOT EXCEED PLUS OR MINUS 0.105 INCHES. THE VARIATION BETWEEN ADJACENT SECTIONS SHALL NOT EXCEED 0.105 INCHES.

PRESERVATION AND PACKAGING

6001. EACH BLADE SHALL BE PRESERVED, PACKED AND MARKED IN ACCORDANCE WITH THE METHODS SPECIFIED IN MIL-DTL-2845.

6002. PROPELLER BLADE EDGES SHALL BE PROTECTED AT ALL TIMES,EXCEPT DURING EXAMINATION, TESTING, AND APPLICATION OF PRESERVATION-PACKAGING, BY THE USE OF EDGE PROTECTORS. EDGE PROTECTORS SHALL BE FORMED AND INSTALLED AS SPECIFIED IN MIL-DTL-2845.

FIND NO	PORT QTY	STBD QTY	UNIT WT	FSCM NO	B-J DRAWING OR PART NO	VENDOR PART NO	DESCRIPTION	MATERIAL	SPEC
3	1	1			K-8-3-24		SSCR, SKT FP 1/2-13UNC-2A X 1/2 LG	MONEL	
2	1		3,6 K		112551001-2		L.H. PROPELLER BLADE	NI AL-BRZ	MIL-B-24480A UNS C95800
1		1	3,6 K		112551001-1		R.H. PROPELLER BLADE	NI AL-BRZ	MIL-B-24480A UNS C95800

PARTS LIST

DEPARTMENT OF THE NAVY
NAVAL SEA SYSTEMS COMMAND

PROPELLER BLADE
(LPD-17 CLASS)

DRAWING NO. 112551001

SIZE	FSCM NO	NAVSEA DRAWING NO.	REV
E	43689	245 7622723	A

SCALE: NONE | EST WT: NOT APPLICABLE | SHEET 2 OF 9

245 7622723 SH 2

N2-F4

REVISIONS						
ZONE	REV	DESCRIPTION	DATE	DWN	CK	ENGR
ALL	A	1) UPDATED SHEET FORMAT INCORPORATES CN-072-23	1/8/26	ZJH	JGY 1/13/26	RTD 1/13/26

PROPELLER DATA

PROPELLER DIAMETER (INCHES) 192.96
HUB DIAMETER (INCHES) 49.50
P/D AT .7 RADIUS 1.099
EAR 0.692
EXPANDED AREA ONE BLADE (SQ FT) 28.10
NUMBER OF BLADES 5
WEIGHT OF ONE BLADE WITHOUT FLANGE (LBS) 3,277
WR SQ ONE BLADE WITHOUT FLG (LB-FT SQ) 80,030
WEIGHT OF ONE BLADE WITH FLANGE (LBS) 3,603
CENTER OF GRAVITY AT RADIUS (FT) 4.290

TABLE 21-G

TABLE OF SECTION OFFSETS

(CONTINUED ON SHEET 4)

OFFSETS ARE FROM REF LINE: PLUS (+) BEING ABOVE (UPPER) AND MINUS (-) BEING (LOWER) ALL DIMENSIONS ARE IN INCHES

R/Ro	TER	%CHORD 100.000	99.975	99.950	99.925	99.900	99.800	99.750	99.500	99.250	99.000	98.500	98.000	97.500	97.000	96.500	96.000	95.000	90.000	85.000	80.000	75.000	70.000	65.000	60.000	55.000	50.000	45.000	40.000
1.000		0.0000	0.0000	0.0000	0.0000	0.0000	0.0000	0.0000	0.0000	0.0000	0.0000	0.0000	0.0000	0.0000	0.0000	0.0000	0.0000	0.0000	0.0000	0.0000	0.0000	0.0000	0.0000	0.0000	0.0000	0.0000	0.0000	0.0000	0.0000
	0.0000	0.0000	0.0000	0.0000	0.0000	0.0000	0.0000	0.0000	0.0000	0.0000	0.0000	0.0000	0.0000	0.0000	0.0000	0.0000	0.0000	0.0000	0.0000	0.0000	0.0000	0.0000	0.0000	0.0000	0.0000	0.0000	0.0000	0.0000	0.0000
		0.0000	0.0000	0.0000	0.0000	0.0000	0.0000	0.0000	0.0000	0.0000	0.0000	0.0000	0.0000	0.0000	0.0000	0.0000	0.0000	0.0000	0.0000	0.0000	0.0000	0.0000	0.0000	0.0000	0.0000	0.0000	0.0000	0.0000	0.0000
0.990		-0.0097	-0.0056	-0.0038	-0.0020	-0.0001	0.0072	0.0109	0.0292	0.0428	0.0531	0.0740	0.0954	0.1172	0.1394	0.1620	0.1850	0.2325	0.4760	0.6647	0.8038	0.9031	0.9766	1.0345	1.0779	1.1060	1.1209	1.1249	1.1170
	0.0031	-0.0097	-0.0131	-0.0138	-0.0144	-0.0150	-0.0176	-0.0189	-0.0255	-0.0323	-0.0394	-0.0543	-0.0701	-0.0867	-0.1041	-0.1222	-0.1411	-0.1809	-0.3925	-0.5423	-0.6415	-0.7106	-0.7600	-0.7950	-0.8191	-0.8346	-0.8413	-0.8383	-0.8262
		0.0000	0.0075	0.0100	0.0124	0.0149	0.0248	0.0298	0.0547	0.0751	0.0925	0.1283	0.1655	0.2039	0.2435	0.2842	0.3261	0.4134	0.8685	1.2070	1.4454	1.6137	1.7365	1.8295	1.8970	1.9405	1.9622	1.9632	1.9432
0.980		-0.0123	-0.0057	-0.0031	-0.0005	0.0021	0.0125	0.0177	0.0436	0.0621	0.0772	0.1080	0.1393	0.1711	0.2033	0.2360	0.2691	0.3370	0.6832	0.9557	1.1595	1.3054	1.4136	1.5000	1.5652	1.6075	1.6306	1.6382	1.6286
	0.0056	-0.0123	-0.0180	-0.0187	-0.0193	-0.0200	-0.0227	-0.0240	-0.0311	-0.0386	-0.0465	-0.0636	-0.0822	-0.1022	-0.1234	-0.1458	-0.1694	-0.2196	-0.4913	-0.6790	-0.7991	-0.8820	-0.9406	-0.9805	-1.0069	-1.0237	-1.0300	-1.0238	-1.0063
		0.0000	0.0123	0.0155	0.0188	0.0221	0.0352	0.0418	0.0748	0.1007	0.1238	0.1716	0.2215	0.2733	0.3267	0.3818	0.4385	0.5566	1.1746	1.6347	1.9587	2.1874	2.3543	2.4805	2.5721	2.6312	2.6606	2.6620	2.6348
0.950		-0.0328	-0.0212	-0.0168	-0.0124	-0.0080	0.0097	0.0186	0.0628	0.1043	0.1345	0.1808	0.2275	0.2745	0.3219	0.3698	0.4181	0.5166	1.0124	1.4015	1.6930	1.9030	2.0594	2.1838	2.2776	2.3391	2.3728	2.3829	2.3660
	0.0108	-0.0328	-0.0436	-0.0439	-0.0442	-0.0445	-0.0458	-0.0465	-0.0504	-0.0551	-0.0606	-0.0739	-0.0900	-0.1085	-0.1289	-0.1511	-0.1750	-0.2276	-0.5269	-0.7300	-0.8550	-0.9388	-0.9967	-1.0346	-1.0587	-1.0735	-1.0777	-1.0694	-1.0509
		0.0000	0.0223	0.0271	0.0318	0.0365	0.0555	0.0651	0.1133	0.1594	0.1950	0.2547	0.3175	0.3830	0.4509	0.5209	0.5932	0.7442	1.5393	2.1315	2.5481	2.8418	3.0561	3.2184	3.3363	3.4125	3.4505	3.4523	3.4170
0.900		-0.0445	-0.0284	-0.0215	-0.0146	-0.0078	0.0197	0.0335	0.0953	0.1356	0.1612	0.2099	0.2577	0.3046	0.3508	0.3967	0.4423	0.5338	0.9841	1.3356	1.6013	1.8017	1.9561	2.0779	2.1688	2.2283	2.2581	2.2591	2.2300
	0.0150	-0.0445	-0.0594	-0.0590	-0.0585	-0.0581	-0.0563	-0.0554	-0.0514	-0.0481	-0.0455	-0.0422	-0.0415	-0.0431	-0.0469	-0.0527	-0.0601	-0.0793	-0.2074	-0.2848	-0.3200	-0.3319	-0.3327	-0.3292	-0.3247	-0.3213	-0.3196	-0.3200	-0.3228
		0.0000	0.0310	0.0375	0.0439	0.0503	0.0760	0.0889	0.1467	0.1837	0.2066	0.2521	0.2992	0.3477	0.3978	0.4494	0.5024	0.6131	1.1915	1.6204	1.9213	2.1335	2.2888	2.4070	2.4934	2.5496	2.5777	2.5791	2.5528
0.800		-0.0463	-0.0281	-0.0195	-0.0109	-0.0023	0.0321	0.0493	0.1302	0.1850	0.2234	0.2955	0.3629	0.4271	0.4892	0.5499	0.6096	0.7270	1.2851	1.7202	2.0496	2.2997	2.4910	2.6366	2.7405	2.8043	2.8291	2.8154	2.7625
	0.0156	-0.0463	-0.0619	-0.0613	-0.0606	-0.0600	-0.0576	-0.0564	-0.0507	-0.0452	-0.0401	-0.0305	-0.0225	-0.0164	-0.0127	-0.0112	-0.0116	-0.0166	-0.0725	-0.1003	-0.1018	-0.0860	-0.0666	-0.0526	-0.0458	-0.0458	-0.0540	-0.0711	-0.0971
		0.0000	0.0337	0.0417	0.0497	0.0577	0.0897	0.1057	0.1809	0.2303	0.2634	0.3260	0.3853	0.4434	0.5019	0.5611	0.6211	0.7436	1.3577	1.8205	2.1515	2.3857	2.5575	2.6893	2.7863	2.8501	2.8831	2.8864	2.8597
0.700		-0.0460	-0.0273	-0.0179	-0.0085	0.0008	0.0383	0.0570	0.1440	0.2018	0.2452	0.3271	0.4038	0.4767	0.5472	0.6160	0.6835	0.8160	1.4524	1.9887	2.4061	2.7055	2.9221	3.0846	3.1960	3.2548	3.2656	3.2329	3.1555
	0.0156	-0.0460	-0.0615	-0.0606	-0.0596	-0.0586	-0.0549	-0.0530	-0.0440	-0.0355	-0.0273	-0.0123	0.0007	0.0112	0.0188	0.0238	0.0265	0.0265	-0.0200	-0.0580	-0.0699	-0.0620	-0.0518	-0.0492	-0.0574	-0.0777	-0.1088	-0.1487	-0.1978
		0.0000	0.0343	0.0427	0.0511	0.0595	0.0931	0.1100	0.1880	0.2373	0.2726	0.3394	0.4031	0.4655	0.5284	0.5922	0.6570	0.7895	1.4724	2.0467	2.4760	2.7676	2.9739	3.1338	3.2534	3.3325	3.3745	3.3816	3.3534
0.600		-0.0458	-0.0273	-0.0180	-0.0087	0.0005	0.0377	0.0562	0.1436	0.2038	0.2478	0.3307	0.4081	0.4816	0.5524	0.6213	0.6887	0.8208	1.4662	2.0627	2.5437	2.8819	3.1233	3.3082	3.4410	3.5193	3.5482	3.5324	3.4701
	0.0156	-0.0458	-0.0614	-0.0603	-0.0592	-0.0581	-0.0537	-0.0516	-0.0412	-0.0315	-0.0222	-0.0053	0.0091	0.0205	0.0285	0.0333	0.0355	0.0340	-0.0326	-0.1346	-0.2093	-0.2394	-0.2505	-0.2607	-0.2746	-0.2937	-0.3174	-0.3447	-0.3771
		0.0000	0.0341	0.0423	0.0504	0.0586	0.0914	0.1078	0.1848	0.2353	0.2701	0.3361	0.3990	0.4611	0.5239	0.5880	0.6532	0.7868	1.4988	2.1973	2.7531	3.1213	3.3737	3.5689	3.7156	3.8130	3.8656	3.8771	3.8472
0.500		-0.0455	-0.0277	-0.0189	-0.0102	-0.0014	0.0336	0.0511	0.1334	0.1916	0.2325	0.3077	0.3776	0.4439	0.5080	0.5707	0.6321	0.7526	1.3443	1.9326	2.4721	2.9333	3.2939	3.5446	3.7162	3.8375	3.9078	3.9211	3.8792
	0.0156	-0.0455	-0.0611	-0.0599	-0.0585	-0.0572	-0.0521	-0.0496	-0.0373	-0.0257	-0.0148	0.0051	0.0223	0.0365	0.0476	0.0559	0.0620	0.0690	0.0427	-0.0677	-0.1988	-0.3128	-0.3951	-0.4429	-0.4708	-0.4915	-0.5112	-0.5335	-0.5575
		0.0000	0.0334	0.0409	0.0484	0.0558	0.0857	0.1007	0.1708	0.2174	0.2473	0.3026	0.3553	0.4074	0.4604	0.5147	0.5701	0.6836	1.3016	2.0003	2.6709	3.2461	3.6890	3.9875	4.1871	4.3290	4.4190	4.4546	4.4367
0.400		-0.0456	-0.0295	-0.0224	-0.0154	-0.0084	0.0198	0.0339	0.1042	0.1732	0.2301	0.3116	0.3828	0.4503	0.5156	0.5792	0.6416	0.7642	1.3691	1.9656	2.5487	3.1023	3.5604	3.8791	4.0853	4.2102	4.2650	4.2548	4.1807
	0.0156	-0.0456	-0.0609	-0.0606	-0.0596	-0.0587	-0.0549	-0.0530	-0.0439	-0.0350	-0.0265	-0.0100	0.0049	0.0176	0.0276	0.0352	0.0406	0.0466	0.0210	-0.0807	-0.2394	-0.4311	-0.5961	-0.6985	-0.7637	-0.8186	-0.8677	-0.9100	-0.9471
		0.0000	0.0315	0.0381	0.0442	0.0503	0.0747	0.0869	0.1481	0.2082	0.2566	0.3216	0.3779	0.4327	0.4879	0.5440	0.6010	0.7176	1.3481	2.0463	2.7881	3.5334	4.1565	4.5776	4.8490	5.0288	5.1327	5.1647	5.1278
0.300		-0.0522	-0.0380	-0.0338	-0.0297	-0.0255	-0.0088	-0.0005	0.0411	0.0827	0.1243	0.2075	0.2907	0.3739	0.4571	0.5404	0.6236	0.7830	1.4207	1.9999	2.5343	3.0208	3.4296	3.7396	3.9545	4.0816	4.1346	4.1251	4.0527
	0.0156	-0.0522	-0.0664	-0.0685	-0.0701	-0.0716	-0.0778	-0.0810	-0.0967	-0.1126	-0.1287	-0.1614	-0.1948	-0.2289	-0.2637	-0.2991	-0.3350	-0.4077	-0.7713	-1.1186	-1.4553	-1.7798	-2.0590	-2.2706	-2.4314	-2.5585	-2.6491	-2.6971	-2.7067
		0.0000	0.0285	0.0347	0.0404	0.0461	0.0690	0.0804	0.1378	0.1953	0.2530	0.3689	0.4855	0.6028	0.7208	0.8395	0.9586	1.1906	2.1921	3.1185	3.9896	4.8006	5.4886	6.0102	6.3858	6.6400	6.7837	6.8222	6.7594
0.255		-0.0630	-0.0496	-0.0451	-0.0405	-0.0360	-0.0179	-0.0088	0.0366	0.0819	0.1273	0.2180	0.3087	0.3994	0.4901	0.5808	0.6704	0.8395	1.5476	2.1633	2.6990	3.1556	3.5354	3.8395	4.0692	4.2249	4.3108	4.3307	4.2862
	0.0156	-0.0630	-0.0764	-0.0804	-0.0844	-0.0884	-0.1045	-0.1125	-0.1526	-0.1927	-0.2330	-0.3139	-0.3950	-0.4756	-0.5555	-0.6345	-0.7128	-0.8668	-1.5914	-2.2378	-2.8062	-3.2967	-3.7089	-4.0424	-4.3015	-4.4887	-4.6028	-4.6417	-4.6080
		0.0000	0.0268	0.0354	0.0439	0.0524	0.0866	0.1037	0.1891	0.2746	0.3603	0.5319	0.7037	0.8750	1.0456	1.2154	1.3832	1.7063	3.1389	4.4011	5.5052	6.4523	7.2442	7.8820	8.3708	8.7136	8.9136	8.9723	8.8943

DEPARTMENT OF THE NAVY
NAVAL SEA SYSTEMS COMMAND

PROPELLER BLADE
(LPD-17 CLASS)

DRAWING NO.				
112551001				
SIZE	FSCM NO	NAVSEA DRAWING NO.		REV
E	43689	245	7622723	A
SCALE: NONE	EST WT: NOT APPLICABLE	SHEET 3 OF 9		

PMS 245 7622723 PT 3

N2-F4

REVISIONS						
ZONE	REV	DESCRIPTION	DATE	DWN	CK	ENGR
G29 F26 E26 D26 ALL	A	1) TABLE '29-G' WAS '21-G' 2) ALTERED VALUES OF RADIUS, PITCH, CHORD, TOTAL RAKE, AND DESIGN RAKE CELLS FOR R/Ro 0.990, 0.980, 0.950, 0.900, 0.800, 0.700, 0.600, 0.500 AND 0.255. 3) UPDATED SHEET FORMAT INCORPORATES CN-072-23	1/8/26	ZJH	JOY 1/13/26	RTD 1/13/26

TABLE 29-G (A1)

TABLE OF SECTION OFFSETS
(CONTINUED FROM SHEET 3)

(A2)

OFFSETS ARE FROM REF LINE: PLUS (+) BEING ABOVE (UPPER) AND MINUS (-) BEING (LOWER) ALL DIMENSIONS ARE IN INCHES

R/Ro	%CHORD 35.000	30.000	25.000	20.000	15.000	10.000	7.500	5.000	3.500	2.500	2.000	1.500	1.250	1.125	1.000	0.750	0.625	0.500	0.313	0.250	0.200	0.150	0.100	0.050	0.000	LER	RADIUS	PITCH	CHORD	TOTAL RAKE	DESIGN RAKE
1.000	0.0000	0.0000	0.0000	0.0000	0.0000	0.0000	0.0000	0.0000	0.0000	0.0000	0.0000	0.0000	0.0000	0.0000	0.0000	0.0000	0.0000	0.0000	0.0000	0.0000	0.0000	0.0000	0.0000	0.0000	0.0000	0.0000	96.480	127.255	0.000	0.272	-4.776
	0.0000	0.0000	0.0000	0.0000	0.0000	0.0000	0.0000	0.0000	0.0000	0.0000	0.0000	0.0000	0.0000	0.0000	0.0000	0.0000	0.0000	0.0000	0.0000	0.0000	0.0000	0.0000	0.0000	0.0000	0.0000						
	0.0000	0.0000	0.0000	0.0000	0.0000	0.0000	0.0000	0.0000	0.0000	0.0000	0.0000	0.0000	0.0000	0.0000	0.0000	0.0000	0.0000	0.0000	0.0000	0.0000	0.0000	0.0000	0.0000	0.0000	0.0000						
0.990	1.0960	1.0619	1.0142	0.9487	0.8582	0.7314	0.6466	0.5330	0.4414	0.3634	0.3176	0.2651	0.2358	0.2203	0.2041	0.1691	0.1502	0.1299	0.0961	0.0840	0.0737	0.0622	0.0491	0.0337	0.0000	0.0787	95.515	135.174	21.952	0.753	-5.001
	-0.8048	-0.7722	-0.7265	-0.6666	-0.5904	-0.4925	-0.4314	-0.3578	-0.3025	-0.2554	-0.2272	-0.1942	-0.1755	-0.1655	-0.1549	-0.1317	-0.1188	-0.1047	-0.0802	-0.0713	-0.0635	-0.0546	-0.0440	-0.0311	0.0000						
	1.9007	1.8341	1.7407	1.6153	1.4486	1.2239	1.0780	0.8908	0.7439	0.6189	0.5447	0.4593	0.4113	0.3858	0.3590	0.3008	0.2690	0.2346	0.1763	0.1553	0.1372	0.1168	0.0932	0.0648	0.0000						
0.980	1.5989	1.5495	1.4797	1.3835	1.2505	1.0641	0.9395	0.7719	0.6365	0.5220	0.4548	0.3783	0.3358	0.3132	0.2897	0.2392	0.2119	0.1827	0.1345	0.1172	0.1026	0.0863	0.0679	0.0463	0.0000	0.1099	94.550	145.254	28.881	1.219	-5.184
	-0.9782	-0.9372	-0.8801	-0.8060	-0.7128	-0.5944	-0.5210	-0.4346	-0.3708	-0.3158	-0.2826	-0.2434	-0.2210	-0.2089	-0.1962	-0.1680	-0.1522	-0.1348	-0.1043	-0.0931	-0.0832	-0.0718	-0.0583	-0.0415	0.0000						
	2.5771	2.4867	2.3598	2.1895	1.9633	1.6584	1.4604	1.2065	1.0073	0.8378	0.7374	0.6218	0.5568	0.5222	0.4859	0.4072	0.3641	0.3175	0.2388	0.2103	0.1858	0.1582	0.1262	0.0878	0.0000						
0.950	2.3173	2.2344	2.1148	1.9522	1.7362	1.4466	1.2606	1.0218	0.8362	0.6822	0.5927	0.4917	0.4358	0.4063	0.3756	0.3099	0.2744	0.2366	0.1741	0.1518	0.1328	0.1118	0.0879	0.0599	0.0000	0.1305	91.656	160.134	40.908	2.566	-5.588
	-1.0246	-0.9899	-0.9446	-0.8858	-0.8081	-0.7017	-0.6308	-0.5401	-0.4672	-0.4015	-0.3610	-0.3124	-0.2842	-0.2689	-0.2527	-0.2168	-0.1965	-0.1741	-0.1348	-0.1204	-0.1076	-0.0929	-0.0754	-0.0536	0.0000						
	3.3419	3.2243	3.0594	2.8380	2.5442	2.1484	1.8914	1.5619	1.3034	1.0837	0.9537	0.8041	0.7200	0.6753	0.6284	0.5266	0.4709	0.4107	0.3089	0.2721	0.2404	0.2047	0.1633	0.1136	0.0000						
0.900	2.1687	2.0738	1.9425	1.7687	1.5421	1.2442	1.0581	0.8327	0.6682	0.5377	0.4639	0.3821	0.3374	0.3141	0.2898	0.2383	0.2106	0.1813	0.1329	0.1157	0.1011	0.0849	0.0667	0.0453	0.0000	0.0554	86.832	182.596	53.752	4.677	-5.690
	-0.3284	-0.3360	-0.3448	-0.3540	-0.3620	-0.3649	-0.3595	-0.3390	-0.3106	-0.2768	-0.2531	-0.2226	-0.2040	-0.1937	-0.1827	-0.1577	-0.1434	-0.1274	-0.0992	-0.0887	-0.0795	-0.0688	-0.0559	-0.0399	0.0000						
	2.4971	2.4098	2.2873	2.1227	1.9041	1.6092	1.4175	1.1717	0.9788	0.8145	0.7170	0.6046	0.5414	0.5078	0.4725	0.3960	0.3540	0.3087	0.2321	0.2044	0.1805	0.1537	0.1226	0.0853	0.0000						
0.800	2.6691	2.5328	2.3497	2.1133	1.8133	1.4309	1.1981	0.9250	0.7330	0.5854	0.5035	0.4140	0.3658	0.3407	0.3148	0.2598	0.2303	0.1990	0.1470	0.1284	0.1126	0.0951	0.0751	0.0515	0.0000	0.0556	77.184	205.448	67.099	7.253	-4.728
	-0.1318	-0.1749	-0.2260	-0.2841	-0.3458	-0.4041	-0.4247	-0.4254	-0.4042	-0.3666	-0.3368	-0.2961	-0.2705	-0.2562	-0.2408	-0.2056	-0.1856	-0.1635	-0.1249	-0.1109	-0.0986	-0.0846	-0.0681	-0.0480	0.0000						
	2.8009	2.7077	2.5757	2.3973	2.1591	1.8350	1.6228	1.3505	1.1373	0.9520	0.8403	0.7101	0.6364	0.5969	0.5555	0.4654	0.4160	0.3625	0.2719	0.2393	0.2112	0.1796	0.1432	0.0995	0.0000						
0.700	3.0313	2.8594	2.6377	2.3603	2.0168	1.5878	1.3298	1.0289	0.8188	0.6570	0.5670	0.4684	0.4152	0.3874	0.3587	0.2977	0.2649	0.2298	0.1711	0.1501	0.1321	0.1120	0.0889	0.0614	0.0000	0.0733	67.536	212.140	69.882	8.102	-3.405
	-0.2562	-0.3217	-0.3915	-0.4630	-0.5310	-0.5836	-0.5945	-0.5797	-0.5445	-0.4903	-0.4484	-0.3918	-0.3565	-0.3369	-0.3157	-0.2678	-0.2407	-0.2109	-0.1596	-0.1410	-0.1248	-0.1065	-0.0853	-0.0596	0.0000						
	3.2875	3.1811	3.0292	2.8233	2.5478	2.1714	1.9243	1.6086	1.3633	1.1472	1.0153	0.8602	0.7717	0.7243	0.6744	0.5655	0.5056	0.4407	0.3307	0.2910	0.2569	0.2185	0.1742	0.1210	0.0000						
0.600	3.3576	3.1926	2.9715	2.6856	2.3211	1.8527	1.5646	1.2216	0.9774	0.7866	0.6796	0.5617	0.4977	0.4643	0.4297	0.3561	0.3164	0.2741	0.2034	0.1782	0.1565	0.1325	0.1049	0.0722	0.0000	0.0998	57.888	219.488	67.483	7.991	-2.132
	-0.4155	-0.4592	-0.5064	-0.5559	-0.6039	-0.6399	-0.6439	-0.6251	-0.5890	-0.5328	-0.4891	-0.4294	-0.3920	-0.3711	-0.3485	-0.2972	-0.2680	-0.2358	-0.1798	-0.1593	-0.1415	-0.1212	-0.0974	-0.0685	0.0000						
	3.7731	3.6519	3.4779	3.2415	2.9250	2.4925	2.2086	1.8467	1.5664	1.3195	1.1687	0.9911	0.8897	0.8354	0.7782	0.6533	0.5844	0.5098	0.3832	0.3375	0.2980	0.2536	0.2023	0.1407	0.0000						
0.500	3.7835	3.6287	3.4068	3.1075	2.7153	2.2006	1.8778	1.4777	1.1812	0.9476	0.8167	0.6731	0.5956	0.5552	0.5134	0.4248	0.3772	0.3265	0.2421	0.2119	0.1861	0.1574	0.1245	0.0855	0.0000	0.1465	48.240	224.256	60.670	6.673	-1.042
	-0.5819	-0.6085	-0.6388	-0.6717	-0.7023	-0.7189	-0.7127	-0.6880	-0.6502	-0.5914	-0.5451	-0.4812	-0.4408	-0.4181	-0.3934	-0.3371	-0.3049	-0.2691	-0.2066	-0.1836	-0.1635	-0.1404	-0.1132	-0.0799	0.0000						
	4.3653	4.2373	4.0456	3.7792	3.4177	2.9195	2.5904	2.1656	1.8314	1.5390	1.3618	1.1544	1.0364	0.9732	0.9068	0.7619	0.6821	0.5956	0.4487	0.3955	0.3496	0.2977	0.2377	0.1654	0.0000						
0.400	4.0423	3.8381	3.5644	3.2129	2.7692	2.2066	1.8628	1.4495	1.1524	0.9230	0.7961	0.6579	0.5836	0.5450	0.5051	0.4205	0.3749	0.3262	0.2445	0.2151	0.1898	0.1613	0.1283	0.0889	0.0000	0.2397	38.592	217.304	49.863	3.863	0.121
	-0.9801	-1.0079	-1.0273	-1.0354	-1.0247	-0.9777	-0.9283	-0.8493	-0.7728	-0.6858	-0.6246	-0.5451	-0.4964	-0.4694	-0.4404	-0.3750	-0.3380	-0.2973	-0.2269	-0.2011	-0.1786	-0.1529	-0.1228	-0.0861	0.0000						
	5.0224	4.8459	4.5917	4.2483	3.7939	3.1843	2.7910	2.2988	1.9252	1.6088	1.4207	1.2029	1.0800	1.0143	0.9455	0.7954	0.7129	0.6235	0.4715	0.4163	0.3684	0.3142	0.2511	0.1750	0.0000						
0.300	3.9144	3.7122	3.4467	3.1106	2.6900	2.1598	1.8377	1.4593	1.1928	0.9884	0.8751	0.7490	0.6794	0.6426	0.6042	0.5202	0.4735	0.4221	0.3320	0.2977	0.2668	0.2305	0.1866	0.1319	0.0000	0.5685	28.944	189.070	36.679	-0.015	0.726
	-2.6817	-2.6180	-2.5091	-2.3491	-2.1272	-1.8196	-1.6174	-1.3621	-1.1661	-0.9980	-0.8969	-0.7771	-0.7077	-0.6702	-0.6305	-0.5422	-0.4925	-0.4378	-0.3421	-0.3059	-0.2734	-0.2354	-0.1899	-0.1336	0.0000						
	6.5961	6.3303	5.9558	5.4598	4.8172	3.9794	3.4551	2.8214	2.3589	1.9864	1.7720	1.5260	1.3871	1.3129	1.2346	1.0624	0.9660	0.8599	0.6741	0.6036	0.5402	0.4659	0.3766	0.2655	0.0000						
0.255	4.1773	4.0037	3.7632	3.4479	3.0425	2.5165	2.1885	1.7932	1.5058	1.2778	1.1480	0.9991	0.9147	0.8695	0.8217	0.7155	0.6553	0.5883	0.4687	0.4224	0.3800	0.3294	0.2676	0.1898	0.0000	1.1880	24.602	163.159	30.359	-1.911	0.007
	-4.5034	-4.3258	-4.0702	-3.7277	-3.2824	-2.7046	-2.3463	-1.9161	-1.6039	-1.3554	-1.2135	-1.0510	-0.9591	-0.9099	-0.8580	-0.7432	-0.6785	-0.6070	-0.4805	-0.4318	-0.3875	-0.3350	-0.2714	-0.1917	0.0000						
	8.6806	8.3296	7.8334	7.1757	6.3249	5.2211	4.5348	3.7093	3.1097	2.6333	2.3615	2.0501	1.8738	1.7794	1.6797	1.4587	1.3338	1.1953	0.9493	0.8542	0.7675	0.6644	0.5391	0.3816	0.0000						

DEPARTMENT OF THE NAVY
NAVAL SEA SYSTEMS COMMAND

PROPELLER BLADE
(LPD-17 CLASS)

DRAWING NO. 112551001			
SIZE	FSCM NO	NAVSEA DRAWING NO.	REV
E	43689	245 7622723	A
SCALE: NONE	EST WT: NOT APPLICABLE	SHEET 4 OF 9	

245 7622723 PT 4

N2-F4

REVISIONS						
ZONE	REV	DESCRIPTION	DATE	DWN	CK	ENGR
C38 ALL	A	1) 10.505 WAS 7.972 2) UPDATED SHEET FORMAT INCORPORATES CN-072-23	1/8/26	ZJH	JDY 1/13/26	RTD 1/13/26

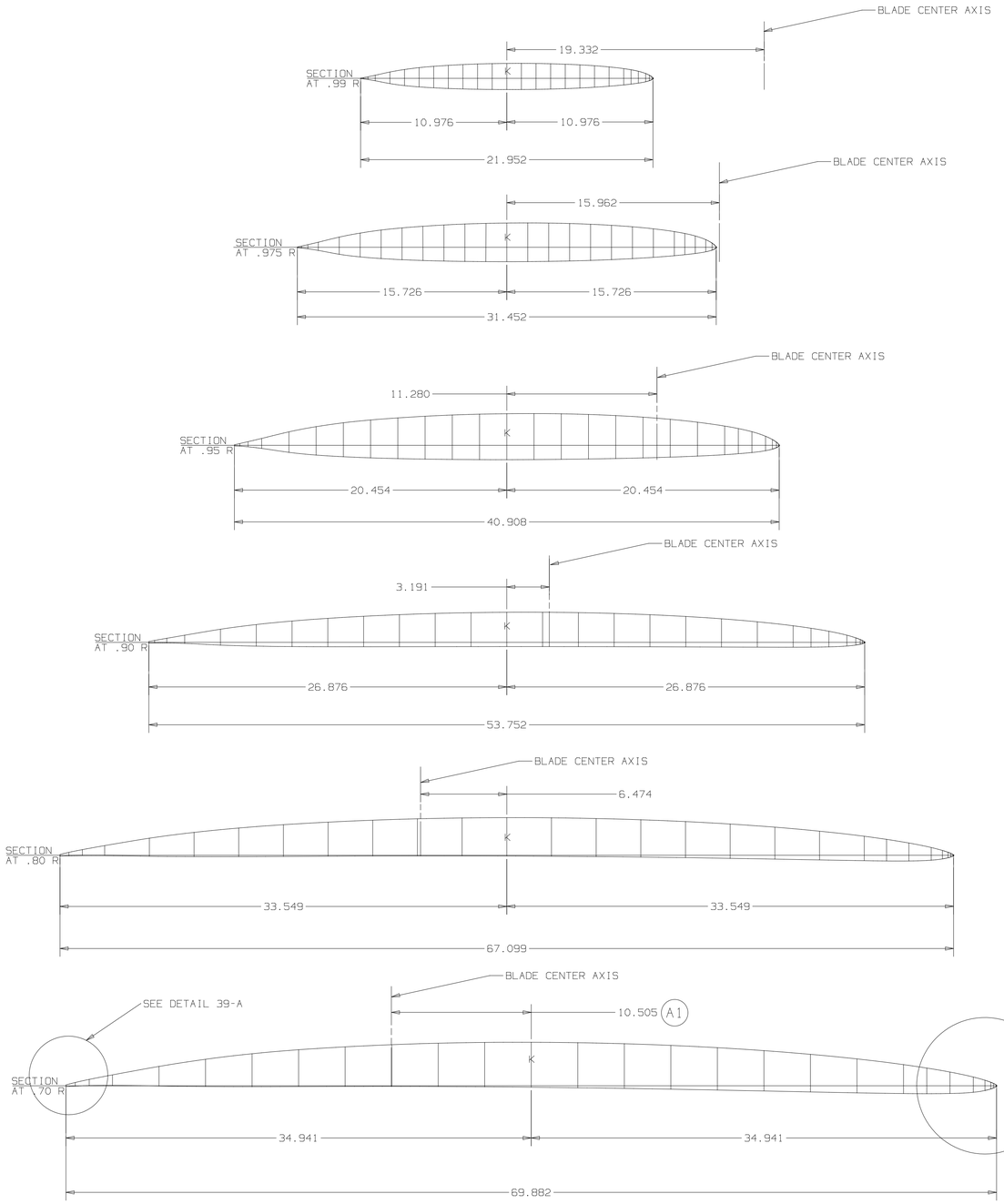

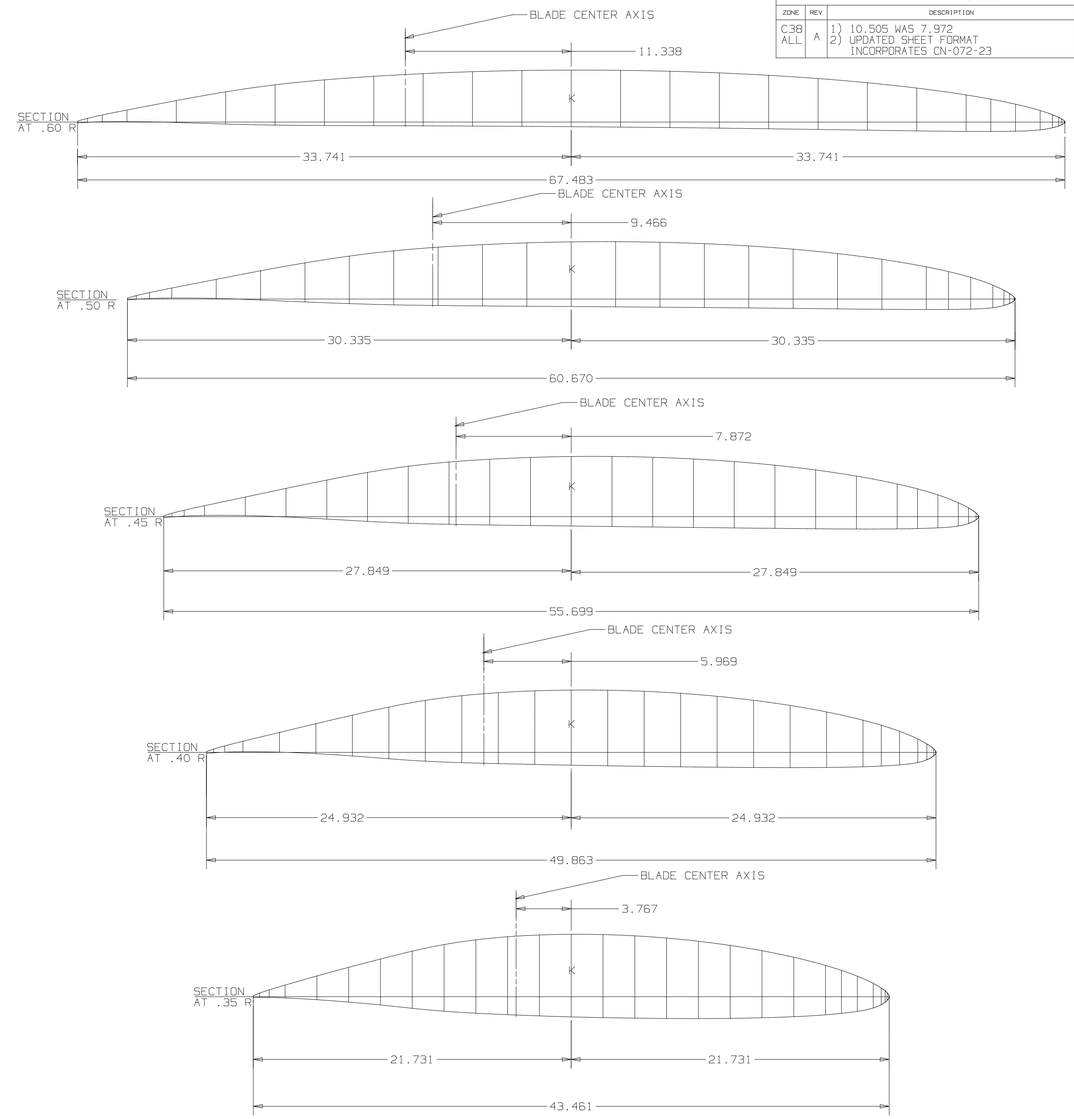

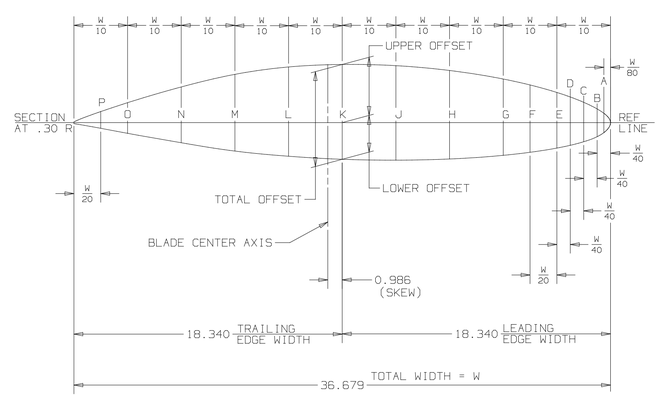

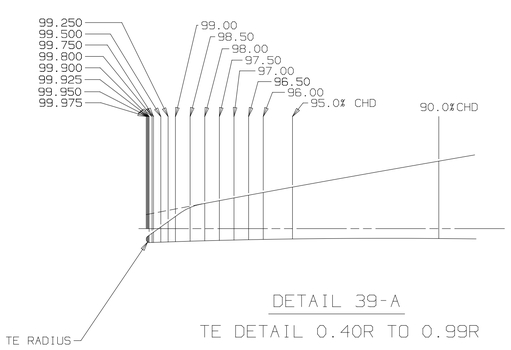

DETAIL 39-A

TE DETAIL 0.40R TO 0.99R

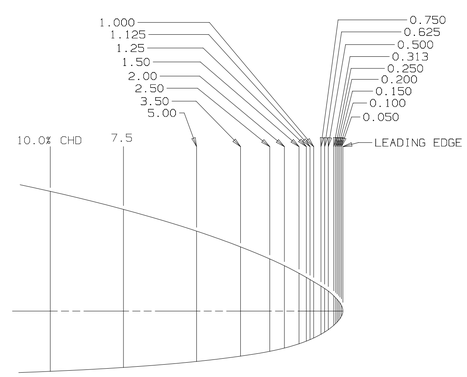

DETAIL 37-A

LEADING EDGE ORDINATES

DEPARTMENT OF THE NAVY
NAVAL SEA SYSTEMS COMMAND

PROPELLER BLADE
(LPD-17 CLASS)

DRAWING NO.				
112551001				
SIZE	FSCM NO	NAVSEA DRAWING NO.		REV
E	43689	245	7622723	A
SCALE: NONE	EST WT: NOT APPLICABLE	SHEET 5 OF 9		

PMS 245 7622723 PAGE 5

N2-F5

REVISIONS						
ZONE	REV	DESCRIPTION	DATE	DWN	CK	ENGR
ALL	A	1) UPDATED SHEET FORMAT INCORPORATES CN-072-23	1/8/26	ZJH	JOY 1/13/26	RTD 1/13/26

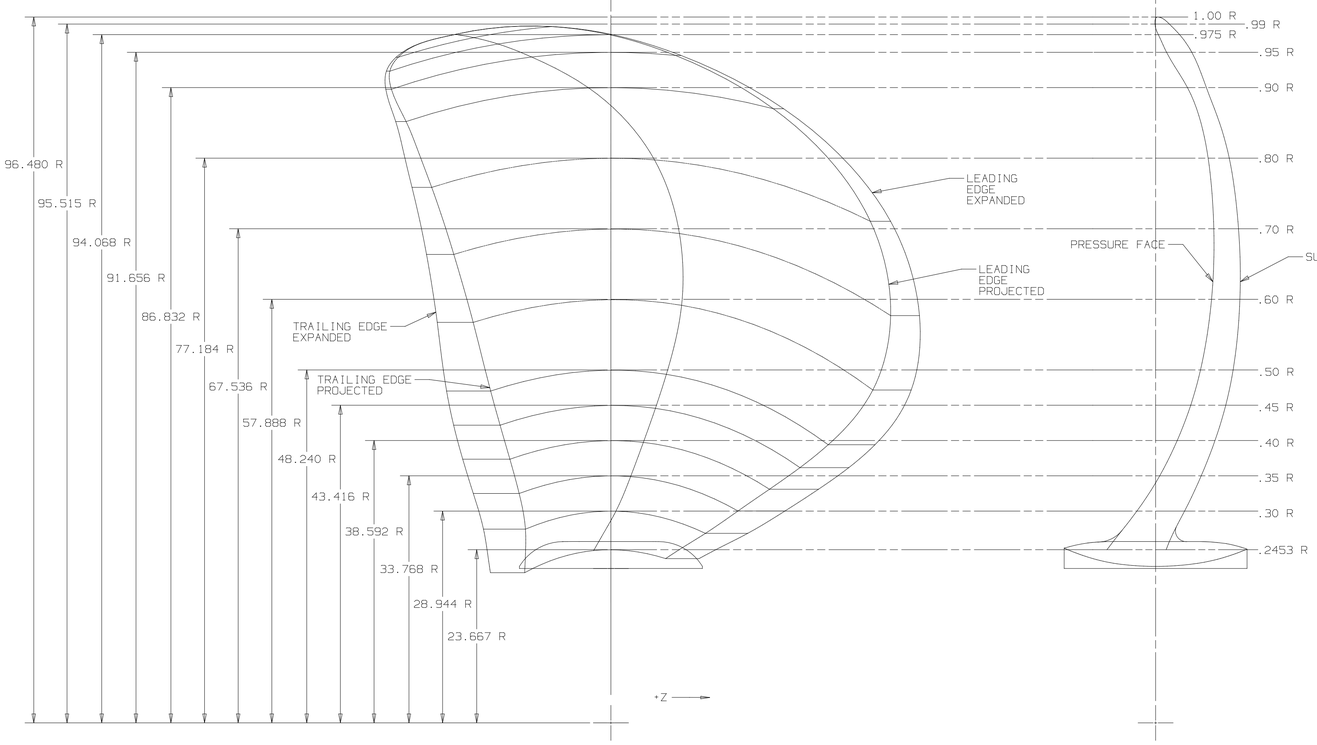

TRANSVERSE PROJECTION AND EXPANDED OUTLINES

(LOOKING FORWARD)

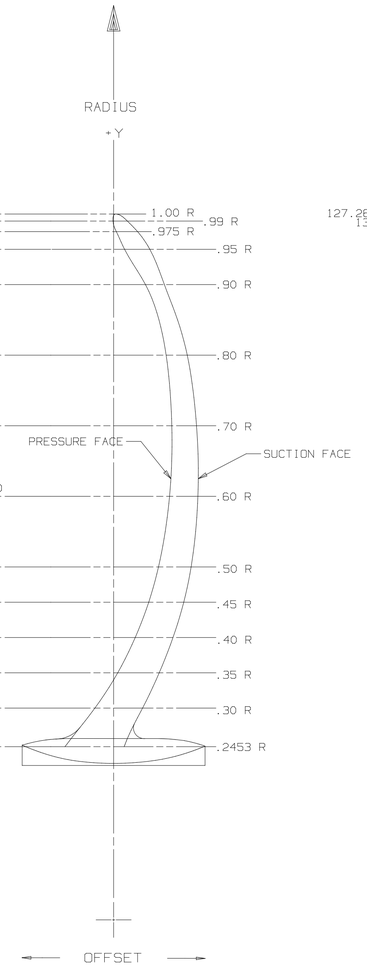

MAX THICKNESS RADIAL DISTRIBUTION

(OFFSETS AT 45% CHORD LOCATION VS RADIUS)

FOR FAIRING FILLET CONSTRUCTION SEE DETAIL 61-A

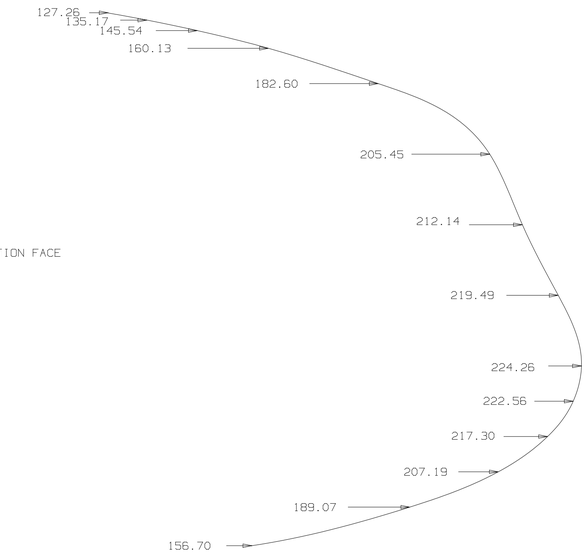

PITCH VARIATION

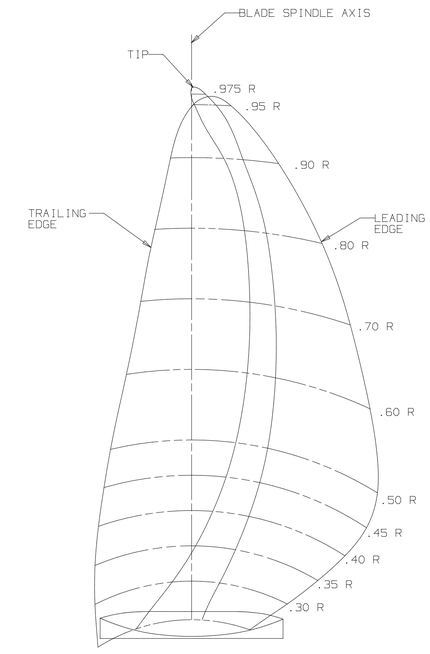

LONGITUDINAL PROFILE OUTLINE

DEPARTMENT OF THE NAVY
NAVAL SEA SYSTEMS COMMAND

PROPELLER BLADE
(LPD-17 CLASS)

DRAWING NO.			
112551001			
SIZE	FSCM NO	NAVSEA DRAWING NO.	REV
E	43689	245 7622723	A
SCALE: NONE	EST WT: NOT APPLICABLE	SHEET 6 OF 9	

245 7622723 6

N2-F5

REVISIONS						
ZONE	REV	DESCRIPTION	DATE	DWN	CK	ENGR
ALL	A	1) UPDATED SHEET FORMAT INCORPORATES CN-072-23	1/8/26	ZJH	JGY 1/13/26	RTD 1/13/26

TABLE 55-H
COORDINATES OF POINTS ON BLADE SURFACES CORRESPONDING TO STATION K (MID-CHORD)

R/Ro	RADIUS	K SUCT (SUCTION FACE)				K PRESS (PRESSURE FACE)			
		θ°	X	Y	Z	θ°	X	Y	Z
.40	38.592	2.375	7.039	38.559	1.599	7.459	3.217	38.265	5.010
.50	48.240	6.278	9.814	47.951	5.275	9.400	6.262	47.592	7.879
.60	57.888	7.794	11.028	57.353	7.850	9.771	7.719	57.048	9.824
.70	67.536	6.733	11.023	67.070	7.918	8.013	8.005	66.877	9.414
.80	77.184	3.606	9.858	77.031	4.854	4.441	7.204	76.952	5.976
.90	86.832	-2.470	6.819	86.751	-3.742	-1.930	4.374	86.783	-2.924
.95	91.656	-7.191	4.853	90.935	-11.473	-6.613	1.528	91.046	-10.556

TABLE 53-H
COORDINATES CORRESPONDING TO INTERSECTION OF X-Y PLANE WITH BLADE SURFACES (Z=0=0.)

R/Ro	Y = R	SUCTION FACE	PRESSURE FACE
		X	X
.40	38.592	5.546	-1.094
.50	48.240	5.624	0.501
.60	57.888	6.038	1.834
.70	67.536	6.916	3.351
.80	77.184	7.739	4.678
.90	86.832	8.062	5.354
.95	91.656	7.654	4.630

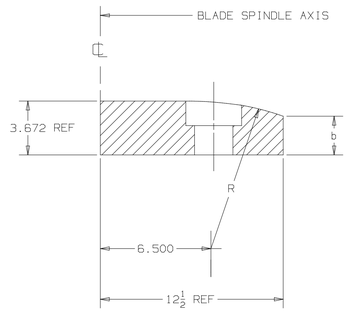

SECTION 51-F
SEE TABLE 52-F

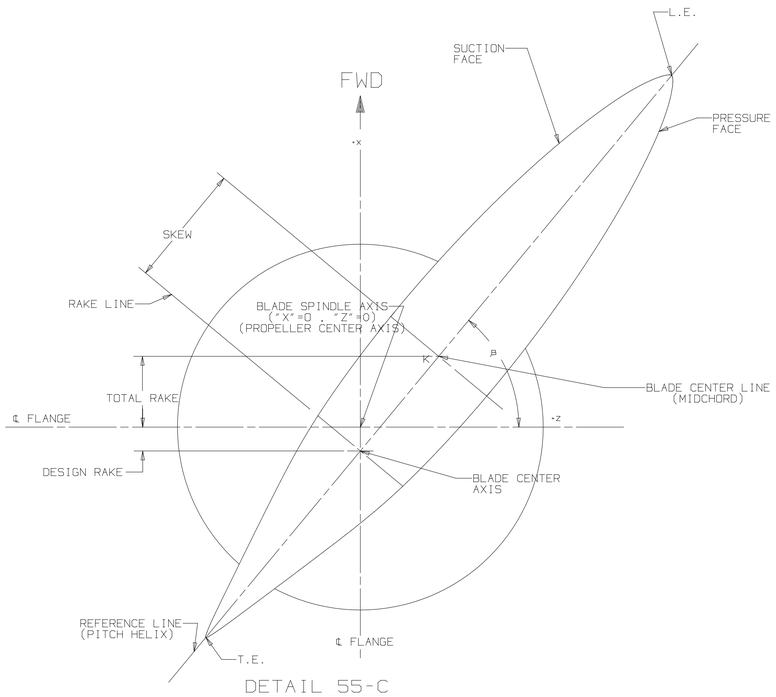

DETAIL 55-C
BLADE SECTION GEOMETRY

TABLE 52-F
SEE "DEVELOPMENT OF FLANGE FAIRING CURVE"
SEE SECTION 51-F & VIEW 52-A

Ω	R	b
0°	17.789	2.630
15°	15.398	2.455
30°	11.492	1.981
45°	8.920	1.352
60°	7.671	0.781
75°	7.166	0.424
90°	7.014	0.291
105°	7.166	0.424
120°	7.689	0.791
135°	9.075	1.406
150°	12.001	2.064
165°	16.681	2.556
180°	19.696	2.736

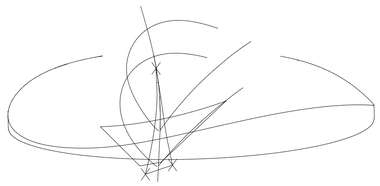

DETAIL 50-D
TRAILING EDGE TRUNCATION

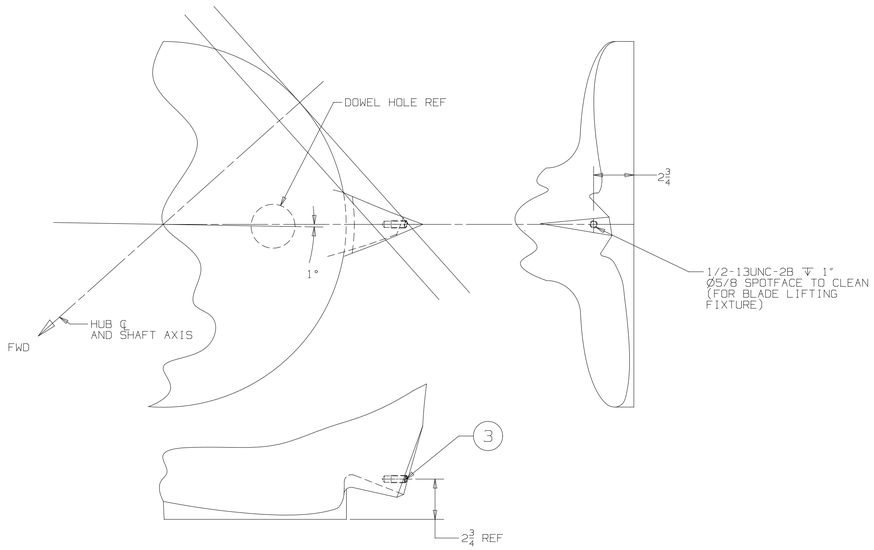

VIEW 55-A
(PARTIAL VIEW)

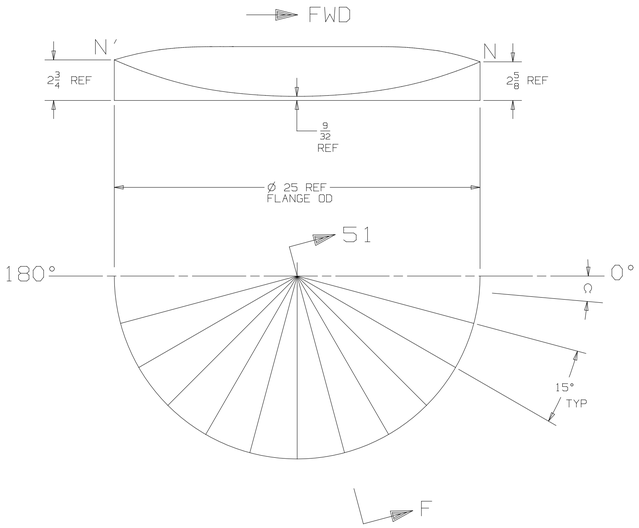

VIEW 52-A
DEVELOPMENT OF FLANGE FAIRING CURVE
SEE SECTION 51-F & TABLE 52-F FOR DIMENSIONS
CORRESPONDING TO VARIOUS VALUES OF ANGLE Ω

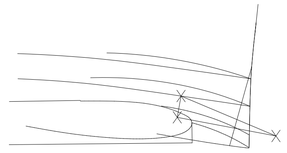

DETAIL 50-B
TRAILING EDGE OVERHANG DEFINITION

DEPARTMENT OF THE NAVY
NAVAL SEA SYSTEMS COMMAND

PROPELLER BLADE
(LPD-17 CLASS)

DRAWING NO. 112551001

SIZE	FSCM NO	NAVSEA DRAWING NO.		REV
E	43689	245	7622723	A

SCALE: NONE | EST WT: NOT APPLICABLE | SHEET 7 OF 9

245 7622723 7

N2-F5

REVISIONS						
ZONE	REV	DESCRIPTION	DATE	DWN	CK	ENGR
ALL	A	1) UPDATED SHEET FORMAT INCORPORATES CN-072-23	1/8/26	ZJH	JOY 1/13/26	RTD 1/13/26

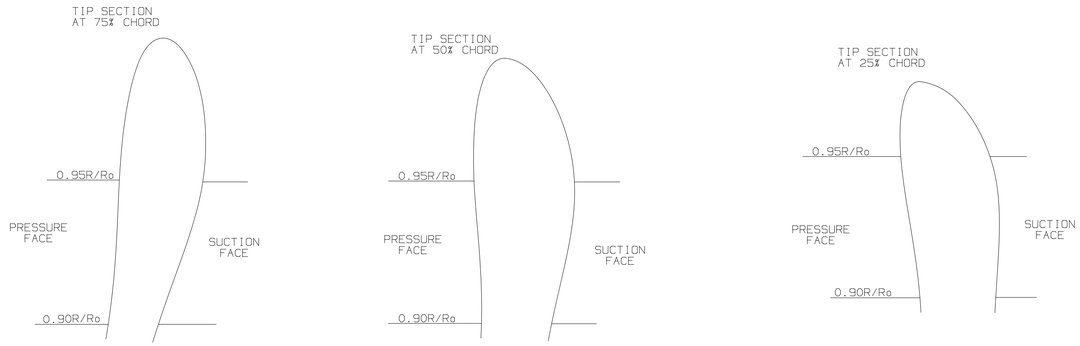

VIEW 59-D

SECTIONS THROUGH BLADE TIP

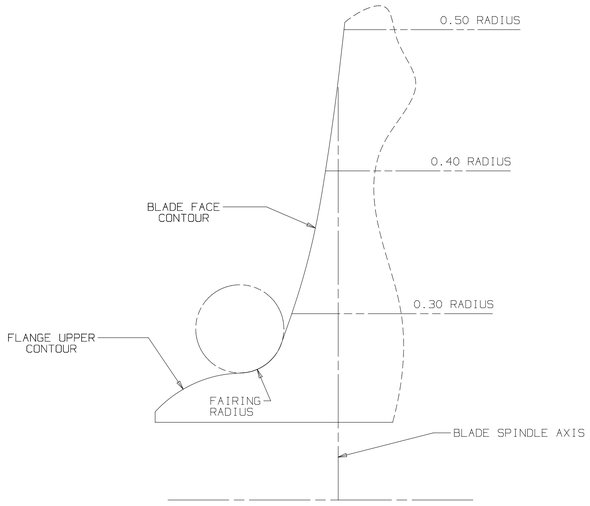

DETAIL 61-A

FAIRING FILLET CONSTRUCTION

TABLE 59-C

FAIRING FILLET RADII

FILLET GAGE	SUCTION FACE	PRESSURE FACE
A	1.08	1.00
B	1.46	1.45
C	1.50	1.51
D	1.35	1.43
E	1.00	1.03

DEPARTMENT OF THE NAVY
NAVAL SEA SYSTEMS COMMAND

PROPELLER BLADE
(LPD-17 CLASS)

DRAWING NO. 112551001

SIZE	FSCM NO	NAVSEA DRAWING NO.	REV
E	43689	245 7622723	A

SCALE: NONE | EST WT: NOT APPLICABLE | SHEET 8 OF 9

245 7622723 8

N2-F5

REVISIONS						
ZONE	REV	DESCRIPTION	DATE	DWN	CK	ENGR
ALL	A	1) UPDATED SHEET FORMAT INCORPORATES CN-072-23	1/8/26	ZJH	JOY 1/13/26	RTD 1/13/26

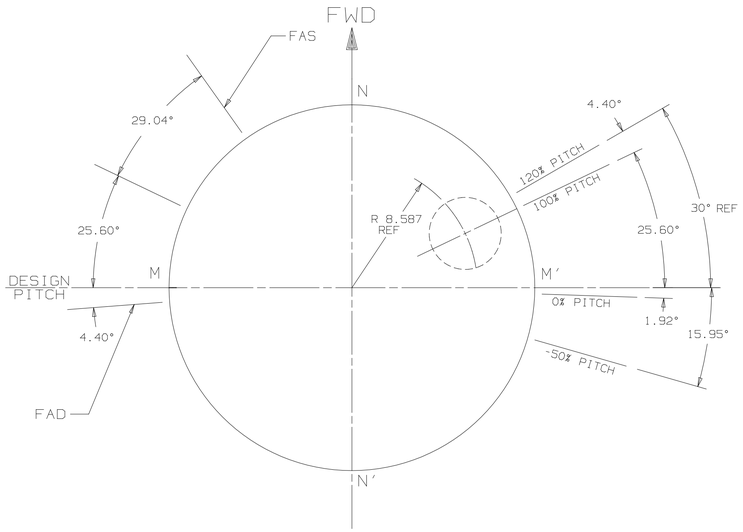

DETAIL 71-F

DIMENSIONS FOR MARKING THE HUB AT SHOP TEST

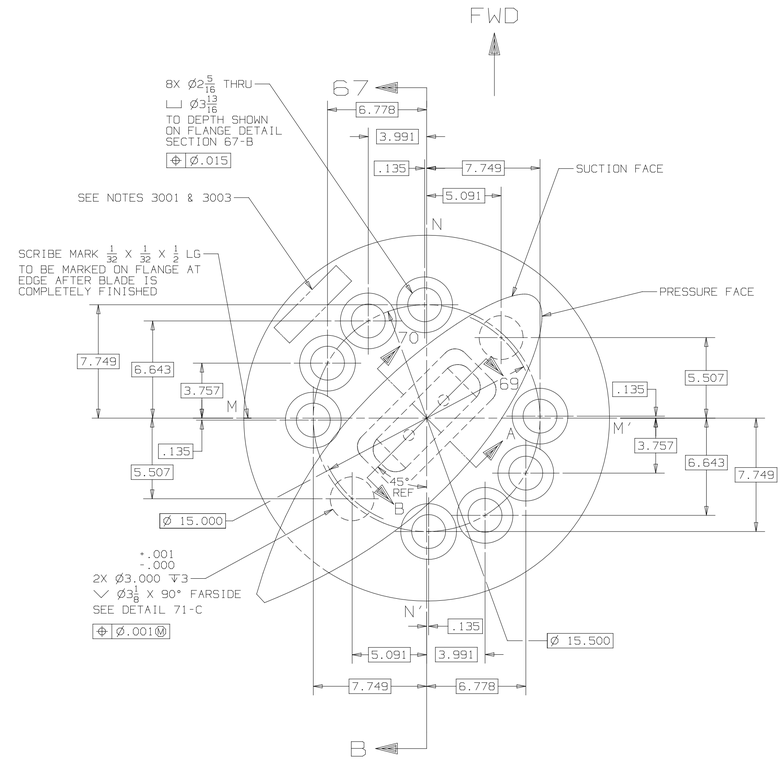

VIEW 67-E

TOP VIEW OF BLADE FLANGE

(.300 R SECTION SHOWN)

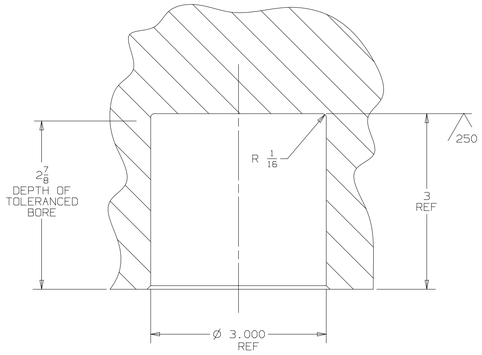

DETAIL 71-C

DOWEL HOLE DETAIL (TYP)
SCALE 1/1

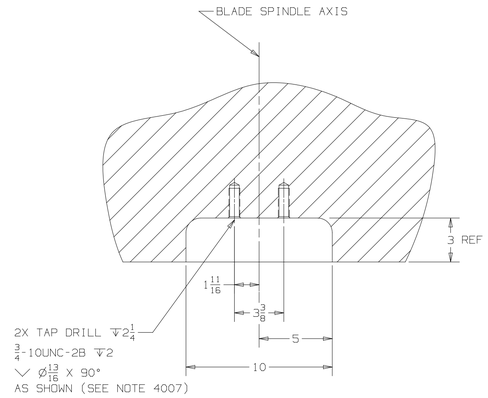

SECTION 69-B

(45° FROM VERTICAL & HORIZONTAL CENTERLINE)

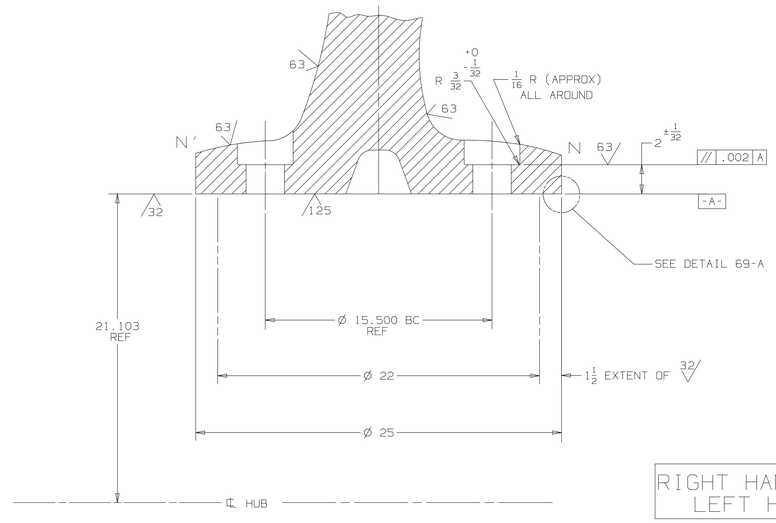

SECTION 67-B

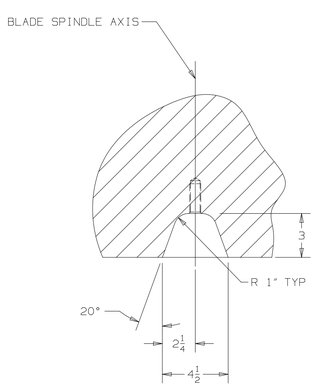

SECTION 70-A

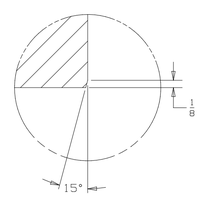

DETAIL 69-A

SCALE 1/1

RIGHT HAND BLADE FLANGE SHOWN
LEFT HAND BLADE OPPOSITE

DEPARTMENT OF THE NAVY
NAVAL SEA SYSTEMS COMMAND

PROPELLER BLADE
(LPD-17 CLASS)

DRAWING NO. 112551001

SIZE	FSCM NO	NAVSEA DRAWING NO.	REV
E	43689	245 7622723	A

SCALE: NONE | EST WT: NOT APPLICABLE | SHEET 9 OF 9

PAGE 245 7622723 9

N2-F5