LIST OF MATERIAL & QUANTITIES FOR ONE GAGE SET								
ITEM	DESCRIPTION	QTY	MATERIAL	SPEC	NAVY STOCK NO	SH NO	REMARKS	ZONE
1	CYL GAGE SUCT FACE 0.4R TO 0.95R	7	GALV STL 20 GA	QQ-S-775		2		
2	CYL GAGE PRESS FACE 0.4R TO 0.95R	7	GALV STL 20 GA	QQ-S-775		2		
3	LE GAGE	7	GALV STL 16 GA	QQ-S-775		4		
4	TE GAGE	7	GALV STL 16 GA	QQ-S-775		4		
5	TIP GAGE	3	GALV STL 16 GA	QQ-S-775		8		
6	FILLET GAGE SUCT FACE (A TO E INCL)	5	GALV STL 16 GA	QQ-S-775		6		
7	FILLET GAGE PRESS FACE (A TO E INCL)	5	GALV STL 16 GA	QQ-S-775		6		

REVISIONS						
ZONE	REV	DESCRIPTION	DATE	DWN	CK	ENGR
G8 F6 F8 C6 H5 B7	A	1) GAGING POINT "TS" WAS "MS". 2) GAGING POINT "TP" WAS "K". 3) DESIGN RAKE WAS "RAKE". 4) COLUMNS "C", "Q", "R", "T", AND "W" IN TABLE 6-C UPDATED. 5) ITEM 1 & 2 WERE 18 GA. 6) DESIGN RAKE CALCUATIONS UPDATED WAS LABELED TOTAL RAKE REVISION STATUS CHANGED CHANGES PER CUSTOMER COMMENTS INCORPORATES CN-030-01.	11/26/02	RWA	WJC	HTS MZN 11/27/02
B6 G7 B4 B2 A1	B	1) TABLE VALUES MODIFIED. 2) VIEW 7-D MODIFIED. GAGING POINTS REMOVED FROM SF. GAGING POINT "Tp" CHANGED. POINT "M" ADDED. 3) 1% PITCH TOLERANCES ADDED. 1.5% PITCH TOLERANCES REMOVED. 4) DELETED REF 2. BLADE FLANGE. REVISION STATUS CHANGED. 5) NAVSEA DWG NUMBER ADDED. INCORPORATES CN-062-03.	10/6/03	JAE	WJC	
G7 ALL C1	C	1) REMOVED "TYP" 2) UPDATED SHEET FORMAT 3) UPDATED REVISION STATUS OF SHEETS INCORPORATES CN-072-23	1/8/26	ZJH	JOY 1/13/26	RTD 1/13/26

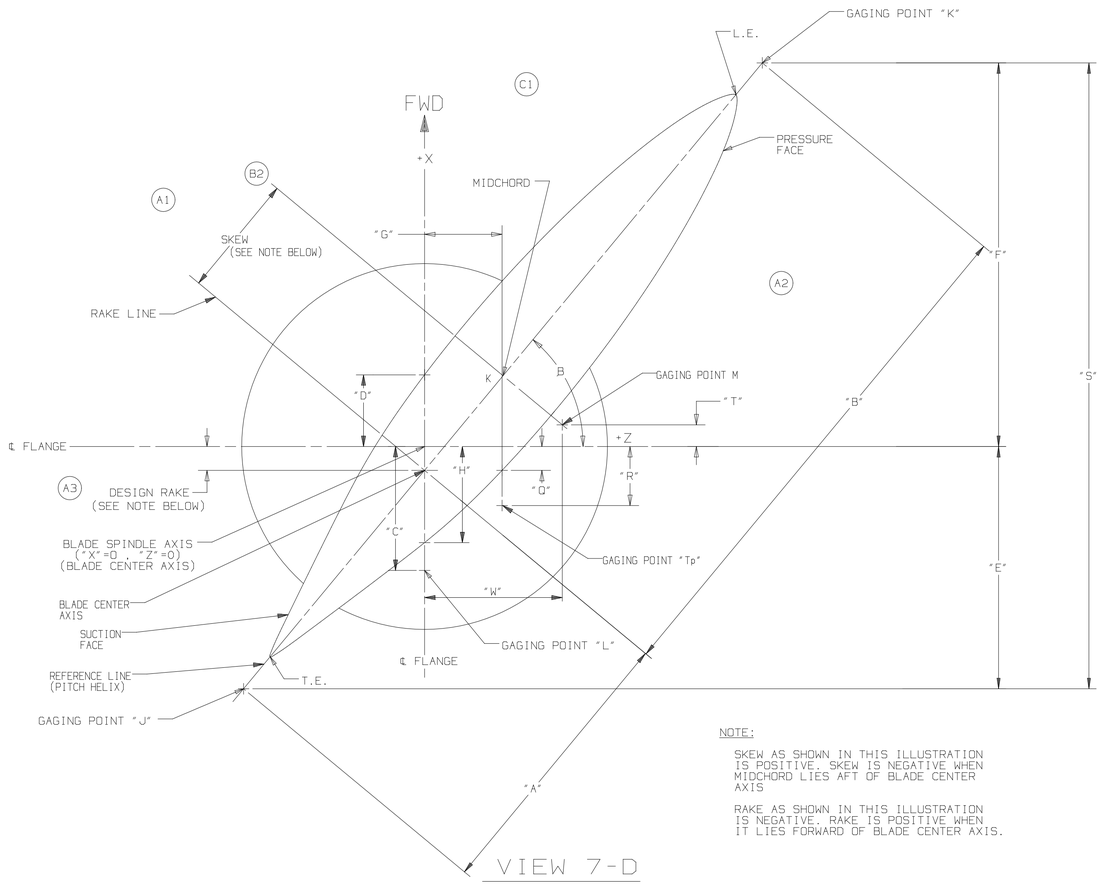

NOTE:

SKEW AS SHOWN IN THIS ILLUSTRATION IS POSITIVE. SKEW IS NEGATIVE WHEN MIDCHORD LIES AFT OF BLADE CENTER AXIS

RAKE AS SHOWN IN THIS ILLUSTRATION IS NEGATIVE. RAKE IS POSITIVE WHEN IT LIES FORWARD OF BLADE CENTER AXIS.

VIEW 7-D

CYLINDRICAL GAGE APPLICATION DATA

SEE TABLE 6-C

GENERAL NOTES:

1. ALL GAGES ARE DESIGNED FROM THE SURFACE MODEL USED TO GENERATE THE TAPES FOR THE NUMERICALLY CONTROLLED (NC) MACHINING OPERATION.
2. IN CASES OF CONFLICT OR INCONSISTENCIES BETWEEN NAVSEA 0987-LP-011-2000 AND THIS DRAWING. THE DRAWING SHALL HAVE PRECEDENCE AND SHALL GOVERN.
3. TOLERANCES FOR CYLINDRICAL, LE, TE, TIP AND FILLET/FLANGE GAGE CONTOURS ARE +.005, -.000 INCH. THE SENSE OF THE TOLERANCE IS TO ALLOW FOR PLUS METAL ON THE BLADE.
4. THREE FLAT TIP GAGES ARE SPECIFIED (SEE DETAIL 59-C SHEET 8).
5. ONE PIECE FILLET/FLANGE GAGES ARE SPECIFIED (SEE DETAIL 46-C SHEET 6).

3	MANUAL OF INSTRUCTION PROPELLER GAGES	NAVSEA 0987-LP-011-2000
2		
1	PROPELLER BLADE (LPD-17)	NAVSEA 245-7622723
NO	DWG NO	TITLE
REFERENCE DRAWINGS		

C	C	C	C	C	C	C	C
SH 1	SH 2	SH 3	SH 4	SH 5	SH 6	SH 7	SH 8
REVISION STATUS OF SHEETS							

TABLE 6-C

SEE VIEW 7-D

CYLINDRICAL GAGE APPLICATION DATA

R/Ro	RADIUS	PITCH (β)	EXP SKEW	DESIGN RAKE	CHORD	A	B	C	D	E	F	G	H	Q	R	T	W	S (DESIGN)	1.00% PITCH TOLERANCES S MAX	S MIN	S	1.25% PITCH TOLERANCES ΔS MAX	S MIN	ΔS
	(IN)	(DEG)	(IN)	(IN)	(IN)	(IN)	(IN)	(IN)	(IN)	(IN)	(IN)	(IN)	(IN)	(IN)	(IN)	(IN)	(IN)							
0.40	38.592	41.8657	5.969	0.121	49.863	22.000	34.000	-2.50	5.546	10.819	26.544	4.446	-1.094	2.717	5.00	2.472	5.692	37.374	37.581	37.372	0.208	37.633	37.372	0.261
0.50	48.240	36.4968	9.466	-1.042	60.670	24.000	43.000	1.00	5.624	7.602	32.248	7.610	0.501	6.041	8.50	5.458	8.509	39.850	40.108	39.848	0.259	40.172	39.848	0.325
0.60	57.888	31.1090	11.338	-2.132	67.483	25.500	48.250	0.00	6.038	5.185	32.920	9.708	1.834	7.622	10.00	6.863	10.388	38.104	38.384	38.102	0.281	38.453	38.101	0.352
0.70	67.536	26.5618	10.505	-3.405	69.882	27.500	48.500	0.00	6.916	4.195	29.790	9.396	3.351	7.982	10.00	7.111	9.892	33.984	34.256	33.982	0.274	34.324	33.981	0.343
0.80	77.184	22.9594	6.474	-4.728	67.099	30.250	43.250	0.00	7.739	4.547	24.124	5.981	4.678	7.196	9.50	6.283	6.372	28.671	28.914	28.669	0.245	28.975	28.668	0.307
0.90	86.832	18.5044	-3.191	-5.690	53.752	33.250	26.750	0.00	8.062	5.875	13.167	-3.026	5.354	4.338	6.50	3.426	-2.607	19.043	19.214	19.041	0.173	19.257	19.040	0.216
0.95	91.656	15.5393	-11.280	-5.588	40.908	34.750	12.250	0.00	7.654	6.743	5.848	-10.868	4.630	1.448	3.50	0.565	-10.311	12.591	12.708	12.590	0.118	12.737	12.590	0.148

PERMISSIBLE VARIATION IN GAGE HEIGHT, ±ΔS BASED ON A RELATIVE PITCH TOLERANCE OF ±1.25% FOR EACH INDIVIDUAL GAGING RADIUS. $\Delta S/S = \pm 0.0125 * \cos^2 \beta$. THIS RESERVES ±1/4% PITCH VARIATION FOR THE HUB MECHANISM.

UNLESS OTHERWISE SPECIFIED DIMENSIONS ARE IN INCHES BREAK ALL CORNERS 0.005-0.020

TOLERANCES: FRAC ± —— DECIMALS .X± —— .XX± —— .XXX± —— ANGLES ± ——

SEE NOTES

SURFACE MICRO IN

STANDARDS: ASME Y14.5M-1994 ANSI B46.1 NBS H28

CONTR NO: 97392

APPROVALS		DATE
DRAWN:	CBD	11/1/99
CHECKED:	WJC	7/31/00
APVD ENGR:	JAE	8/20/00
DESIGN APVD:	HTS	29AUG00
APVD FOR PROMT:	JC	30AUG00

DEPARTMENT OF THE NAVY
NAVAL SEA SYSTEMS COMMAND

PROPELLER BLADE GAGE DATA (LPD-17 CLASS)

APPROVAL CATEGORY: 1

CONTRACT: N00024-97-C-2202

APPROVED: NAVAL SEA SYSTEMS COMMAND 05H — DATE

DRAWING NO. 112551003

SIZE	FSCM NO	NAVSEA DRAWING NO.	REV
E	43689	245 7622724	C

SCALE: NONE EST WT: NOT APPLICABLE SHEET 1 OF 8

FMO NO 245-7622724 SH 1

P1-F1

REVISIONS						
ZONE	REV	DESCRIPTION	DATE	DWN	CK	ENGR
E14 E10 G10 C16 A16	A	1) SUCTION AND PRESSURE FACE CYLINDRICAL GAGE MARKINGS MODIFIED AND UPDATED. 2) ADDED Ø0.025 TYP. 3) UPDATE NOTE 3 4) ADDED NOTE 3. (M) & CHANGES PER CUSTOMER COMMENTS INCORPORATES CN-030-01	11/26/02	RWA	WJC	11/27/02
B16 A16 E12 A9	B	1) MODIFIED WORDING OF NOTES 2) MODIFIED LABELING OF GAGE. 3) ADDED NAVSEA DWG NUMBER. INCORPORATES CN-062-03	10/6/03	JAE	WJC	
C11 C11 D11 ALL	C	1) REMOVED "(E)" CALLOUT 2) ADDED "C", "D" AND "E" LABELS TO PRESSURE FACE GAGE 3) UPDATED SHEET FORMAT INCORPORATES CN-072-23	1/8/26	ZJH	JDY 1/13/26	RTD 1/13/26

TABLE 15-H

DATA FOR LAYOUT OF 0.90 AND 0.95 RADIUS CYLINDRICAL GAGES WITH TIP GAGE CONTOUR INTERSECTING POINTS

CYL GAGE R/RO	SUCTION FACE		PRESSURE FACE	
	%CHORD	UU=DIST FROM LE	%CHORD	UU=DIST FROM LE
0.95	25	10.227	25	10.227
0.90	25	13.438	25	13.438
0.95	50	20.454	50	20.454
0.90	50	26.876	50	26.876
0.95	75	30.681	75	30.681
0.90	75	40.314	75	40.314

TABLE 15-F

DATA FOR LAYOUT OF 0.3 ,0.4 AND 0.5 RADIUS CYLINDRICAL GAGES WITH FILLET GAGE CONTOUR INTERSECTING POINTS

FILLET GAGE		CYL GAGE R/RO	X	Y	Z	THETA	%CHORD	UU=DIST FROM LE
(A)	PF	0.30	5.1277	27.5330	8.9290	17.968	24.025	8.812
	PF	0.40	5.8451	37.7548	7.9922	11.952	41.968	20.927
	PF	0.50	6.0999	47.6280	7.6595	9.136	50.453	30.609
	SF	0.30	8.7339	28.6354	4.2201	8.383	26.083	9.567
	SF	0.40	9.0249	38.4006	3.8384	5.708	43.988	21.934
	SF	0.50	8.8667	48.0701	4.0467	4.812	52.566	31.892
(B)	PF	0.30	1.5610	28.3369	5.9017	11.765	36.954	13.555
	PF	0.40	2.7032	38.3379	4.4103	6.562	51.601	25.730
	PF	0.50	3.2167	48.0949	3.7377	4.444	58.514	35.500
	SF	0.30	5.6616	28.9388	0.5484	1.086	39.100	14.342
	SF	0.40	5.8466	38.5908	0.3056	0.454	53.540	26.697
	SF	0.50	5.8628	48.2391	0.2846	0.338	60.506	36.709
(C)	PF	0.30	-1.8176	28.8256	2.6287	5.211	49.849	18.284
	PF	0.40	-0.4103	38.5829	0.7911	1.175	61.188	30.511
	PF	0.50	0.3557	48.2392	-0.2093	-0.249	66.558	40.380
	SF	0.30	2.3167	28.8093	-2.7697	-5.491	51.913	19.041
	SF	0.40	2.5112	38.4728	-3.0237	-4.494	62.981	31.404
	SF	0.50	2.7677	48.1227	-3.3587	-3.992	68.365	41.476
(D)	PF	0.30	-5.0212	28.9314	-0.8726	-1.728	62.772	23.024
	PF	0.40	-3.4727	38.4814	-2.8947	-4.302	70.805	35.306
	PF	0.50	-2.4669	48.0557	-4.2080	-5.004	74.633	45.279
	SF	0.30	-1.3092	28.3709	-5.7197	-11.398	64.687	23.727
	SF	0.40	-1.0495	38.1144	-6.0588	-9.032	72.307	36.055
	SF	0.50	-0.4765	47.7574	-6.8071	-8.112	76.149	46.199
(E)	PF	0.30	-8.0388	28.5733	-4.6170	-9.179	75.821	27.810
	PF	0.40	-6.4435	38.0051	-6.7001	-9.998	80.504	40.142
	PF	0.50	-5.2509	47.5274	-8.2572	-9.856	82.772	50.217
	SF	0.30	-5.3127	27.7641	-8.1800	-16.416	77.374	28.380
	SF	0.40	-4.8572	37.5820	-8.7714	-13.137	81.540	40.659
	SF	0.50	-3.8811	47.1827	-10.0465	-12.020	83.837	50.864

CYLINDRICAL GAGE GENERAL NOTES

1. SHARP KNUCKLES SHOWN AT HH AND JJ IN DETAIL 22-D (SHT 3) WILL NOT BE PRESENT IN NC MACHINED GAGES (INSTEAD, THERE WILL BE A RADIUS EQUAL TO HALF THE DIAMETER OF THE MILLING CUTTER USED). HAND MADE GAGES SHALL HAVE A BLENDED RADIUS AT POINTS HH AND JJ.

2. NEGATIVE VALUES OF QUANTITIES H,R,T AND W IN TABLE 6-C (SHT 1) HAVE THE FOLLOWING MEANINGS:
   - 2.1 NEGATIVE H--POINT ON PRESSURE FACE CONTOUR LIES ABOVE (FORWARD) BLADE CENTER AXIS.
   - 2.2 NEGATIVE R--GAGING POINT KS LIES TO THE LEFT OF THE X AXIS.
   - 2.3 NEGATIVE T--GAGING POINT KP LIES BELOW Z AXIS.
   - 2.4 NEGATIVE W--GAGING POINT KP LIES TO THE LEFT OF THE X AXIS.

A3 3. THE FOLLOWING LINES, POINTS AND LETTERS SHALL BE SHOWN ON BOTH SIDES OF ALL CYLINDRICAL GAGES UNLESS OTHERWISE SPECIFIED (SEE DETAIL 13-D)(DO NOT STAMP).
   - (A) REF LINE (PITCH HELIX) AT BOTH ENDS AS SHOWN LABELED "REF. LINE".
   - (B) CYLINDRICAL CENTER ELEMENT (Z=0) LABELED "BCA"
   - (C) BLADE EDGE ORDINATES. LINES LE AND TE. THE LETTERS "LE" OR "TE" TO INDICATE LEADING EDGE AND TRAILING EDGE ADJACENT TO PROPER BLADE ORDINATE.
   - (D) BLADE RAKE LINE LABELED "CA".
   - (E) GAGING POINTS "J","K","L","M" AND "Tp" ON PRESSURE FACE GAGES. DRILL A 0.025 DIA HOLE AT EACH POINT.
   - B1 (F) GAGING POINTS "J","K" ON SUCTION FACE GAGES. DRILL A 0.025 DIA HOLE AT EACH POINT.
   - (G) LETTERS INDICATING POINTS "J","K","L","M", AND "TP".
   - (H) TWO (2) LINES PARALLEL TO THE CYL CTR ELEM, ONE (1) EACH INTERSECTING POINTS "J" AND "K".
   - (I) EXTENSIONS, LETTERS "A" THRU "P" AND CHARACTERS "45" TO INDICATE EACH DESIGN THICKNESS ORDINATE, AS SHOWN IN DETAIL 13-D STARTING WITH STATION "A" (1.25 CHORD). LOCATION K SHALL ALSO BE MARKED "℄" (SEE REF DWG 1 FOR MANUAL LAYOUT DATA)
   - (J) FIVE (5) LINES PERPENDICULAR TO THE REFERENCE LINE. EACH LINE SHALL BE TWO (2) INCHES LONG. EACH INDICATING A FILLET GAGE CONTOUR INTERSECTING POINT. EACH LINE SHALL BE LABELED WITH ITS APPROPRIATE LETTER (A,B,C,D OR E) THIS NOTE APPLIES TO 0.3, 0.4 AND 0.5 RADIUS CYLINDRICAL GAGES ONLY (SEE TABLE 15-F).
   - (K) THREE (3) LINES PERPENDICULAR TO THE REFERENCE LINE. EACH INDICATING THE TIP GAGE CONTOUR INTERSECTING POINT. EACH LINE SHALL BE TWO (2) INCHES LONG AND SHALL BE LABELED TIP GAGE. THIS NOTE APPLIES TO THE 0.95 AND 0.90 RADIUS CYLINDRICAL GAGES ONLY (SEE TABLE 15-H).
   - (L) ONE (1) LINE PARALLEL TO THE CYL CTR ELEM INDICATING THE BLADE CENTER LINE. THIS LINE SHALL BE LABELED "BCL".
   - (M) GAGE IDENTIFICATION AS FOLLOWS (ONE SIDE ONLY)
     - (1) "LPD-17 CLASS"
     - B2 (2) "DWG 245-7622724 REV _"
     - (3) "R/RO=_____"
     - (4) "SUCT FACE" OR "PRESS FACE" (AS APPROPRIATE)
     - (5) "NSN _____" (TO BE ASSIGNED BY USN)
     - A4 (6) "GAGE SERIAL NUMBER:_____"

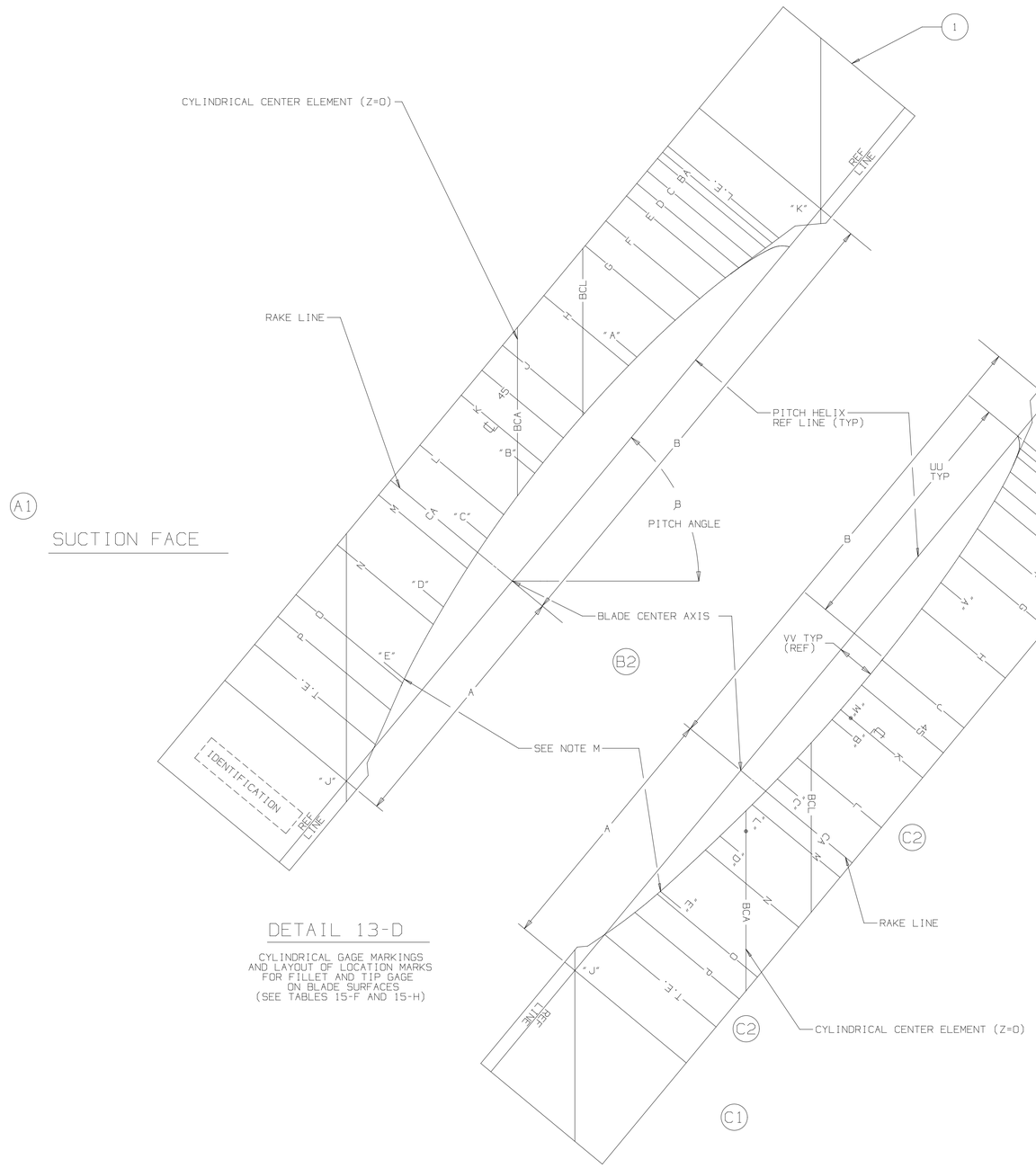

DETAIL 13-D

CYLINDRICAL GAGE MARKINGS AND LAYOUT OF LOCATION MARKS FOR FILLET AND TIP GAGE ON BLADE SURFACES (SEE TABLES 15-F AND 15-H)

DEPARTMENT OF THE NAVY
NAVAL SEA SYSTEMS COMMAND

PROPELLER BLADE GAGE DATA
(LPD-17 CLASS)

DRAWING NO.			
112551003			
SIZE	FSCM NO	NAVSEA DRAWING NO.	REV
E	43689	245 7622724	C
SCALE: NONE	EST WT: NOT APPLICABLE	SHEET 2 OF 8	

DWG NO 245-7622724 REV C

P1-F1

REVISIONS						
ZONE	REV	DESCRIPTION	DATE	DWN	CK	ENGR
G21,24 D21,24	A	1) GAGE END RELIEF MODIFIED 4 PLACES. CHANGES PER CUSTOMER COMMENTS INCORPORATES CN-030-01	11/26/02	RWA	WJC	HTS MFN 11/27/02
G21,24 D21,24 C22 C20 A17	B	1) GAGE END RELIEF VIEWS MODIFIED (4 PLACES). 2) TABLE LAYOUT MODIFIED 3) MODIFIED WORDING OF NOTE TO ACCURATELY DESCRIBE RELIEF. 4) ADDED NAVSEA DWG NUMBER. INCORPORATES CN-062-03	10/6/03	JAE	WJC	
ALL	C	1) UPDATED SHEET FORMAT INCORPORATES CN-072-23	1/8/26	ZJH	JOI 1/13/26	RTD 1/13/26

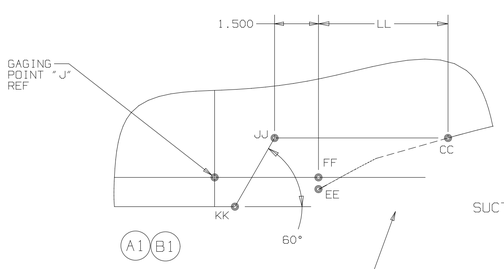

SUCTION FACE

SUCTION FACE CYLINDRICAL GAGE CONFIGURATION
(SEE TABLES 6-C (SHT 1) AND 23-C)

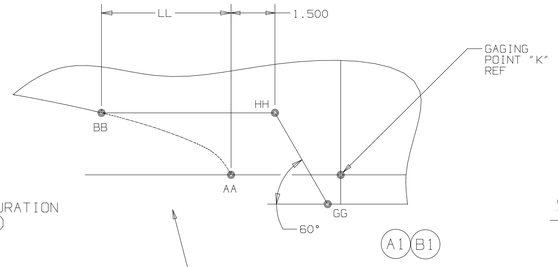

SUCTION FACE CYLINDRICAL GAGE NOTES

(SEE TABLE 23-C)

NOMENCLATURE:

AA-KK=POINTS.
LL,MM=DISTANCES PARALLEL TO LINE AA,FF.
LINE AA,BB,CC,EE=DESIGN SUCTION FACE.
LINE GG,HH,BB,CC,JJ,KK=SUCTION FACE GAGE CONTOUR.
LINE AA,FF=PITCH HELIX IN EXPANDED (FLATTENED) VIEW.
POINT AA=LEADING EDGE. (ON PITCH HELIX)
POINT FF=TRAILING EDGE (ON PITCH HELIX)

NOTES:

1. LINES BB,HH & CC,JJ ARE STRAIGHT LINES TANGENT TO THE SUCTION FACE CONTOUR AT POINTS BB & CC RESPECTIVELY (SEE TABLE 23-C)
2. LINES HH,GG & JJ,KK ARE STRAIGHT LINES MAKING AN ANGLE OF 45° WITH LINE AA,FF AS SHOWN.

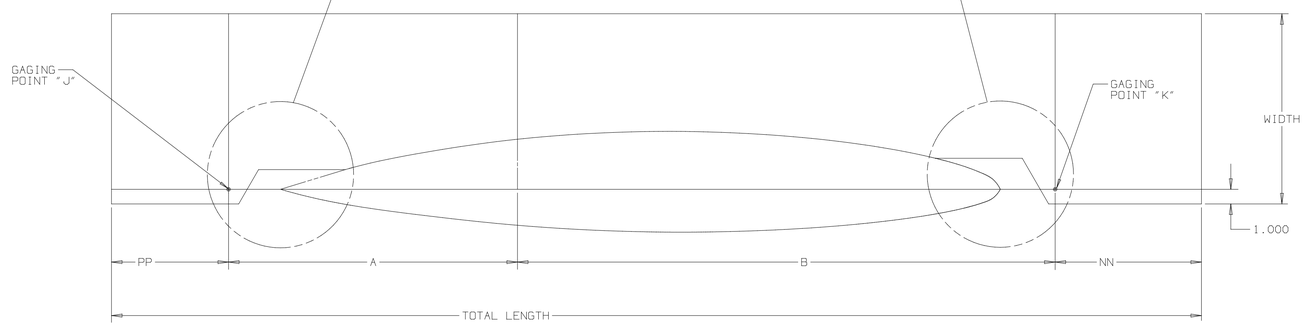

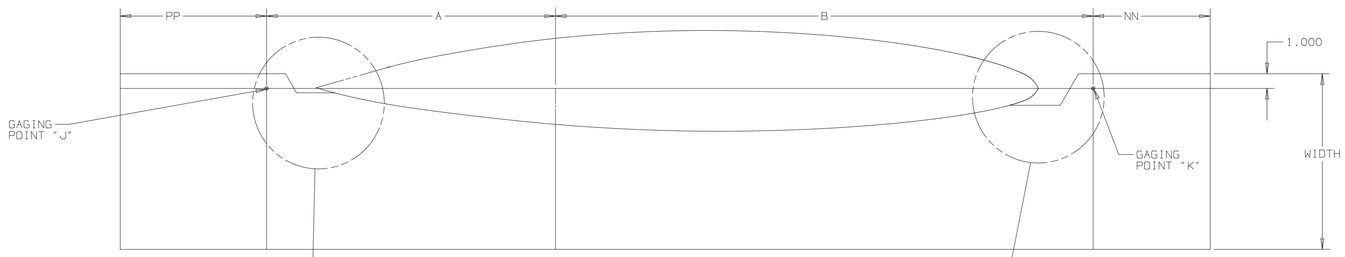

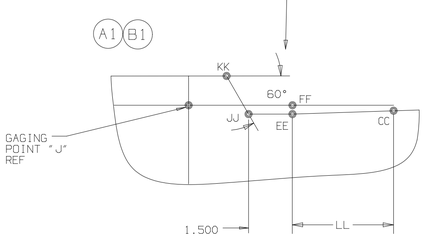

PRESSURE FACE

PRESSURE FACE CYLINDRICAL GAGE CONFIGURATION
(SEE TABLES 6-C SHT 1, 23-C SHT 3 AND SHT 2)

DETAIL 22-D

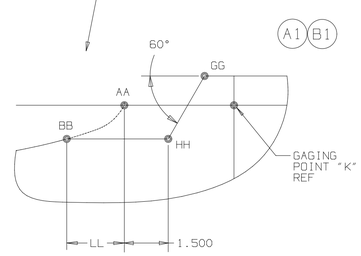

PRESSURE FACE CYLINDRICAL GAGE NOTES

(SEE TABLE 23-C)

NOMENCLATURE:

AA,BB,EE-KK=POINTS.
LL=DISTANCE MEASURED PARALLEL TO LINE AA,FF.
LINE AA,BB,EE=DESIGN PRESSURE FACE CONTOUR.
LINE GG,HH,BB,EE,JJ,KK=PRESSURE FACE GAGE CONTOUR (SEE NOTES BELOW)
LINE AA,FF=PITCH HELIX IN EXPANDED (FLATTENED) VIEW.
POINT AA=LEADING EDGE.
POINT FF=TRAILING EDGE (ON PITCH HELIX)

NOTES:

1. LINE BB,HH IS A LINE PARALLEL TO THE REFERENCE LINE INTERSECTING THE PRESSURE FACE SECTION CONTOUR AT POINT BB. LINE CC,JJ IS A STRAIGHT LINE PARALLEL TO THE REFERENCE LINE INTERSECTING THE SECTION CONTOUR AT POINT CC.
2. LINES HH,GG & JJ,KK ARE STRAIGHT LINES MAKING AN ANGLE OF 60° WITH THE REFERENCE LINE. (B3)
3. THE PRESSURE FACE TRAILING EDGE GAGE MAY NEED TO BE FURTHER RELIEVED BY FILING OR OTHER MEANS FROM POINT CC TO POINT JJ TO AVOID INTERFERENCE WITH THE SECTION CONTOUR.

TABLE 23-C (B2)

R/RO	CHORD LENGTH (DIST AA-FF)	TANGENCY POINT BB/CC		GAGE LENGTH				GAGE WIDTHS	
		LL=DIST FROM LE/TE	PCT CHORD FROM LE/TE	A+B	NN	PP	TOTAL	SUCTION FACE	PRSSURE FACE
0.40	49.863	1.995	4.00	56.00	8	8	72.00	13 1/4	8
0.50	60.670	2.427	4.00	67.00	8	8	83.00	13	8 1/4
0.60	67.483	2.699	4.00	73.75	8	8	89.75	12 1/2	8 1/4
0.70	69.882	2.795	4.00	76.00	8	8	92.00	12 1/4	8 1/2
0.80	67.099	2.684	4.00	73.50	8	8	89.50	11 1/4	8 1/2
0.90	53.752	2.150	4.00	60.00	8	8	76.00	11 1/4	8 1/2
0.95	40.908	1.636	4.00	47.00	8	8	63.00	11 1/4	7 3/4

DEPARTMENT OF THE NAVY
NAVAL SEA SYSTEMS COMMAND

PROPELLER BLADE
GAGE DATA
(LPD-17 CLASS)

DRAWING NO. 112551003

SIZE	FSCM NO	NAVSEA DRAWING NO.	REV
E	43689	245 7622724	C

SCALE: NONE | EST WT: NOT APPLICABLE | SHEET 3 OF 8

245-7622724 B3

P1-F1

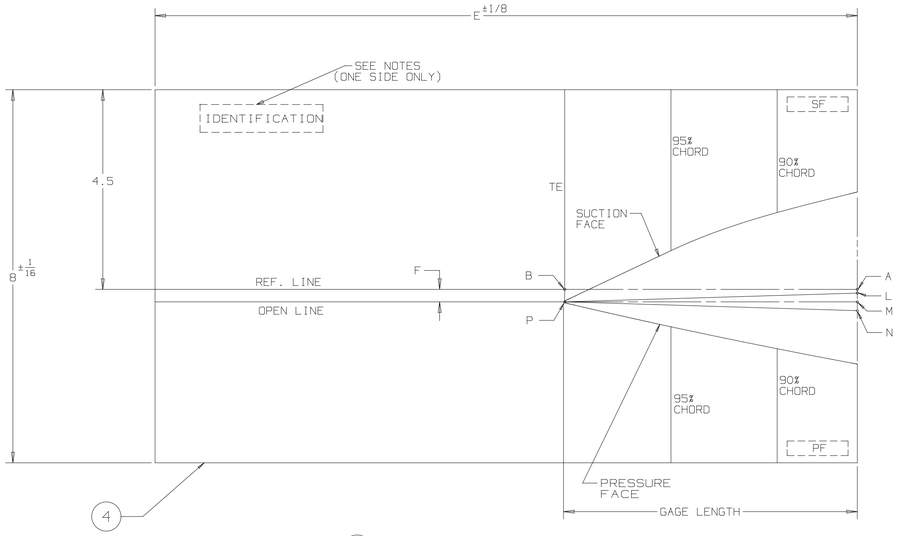

(A5) TRAILING EDGE GAGES DETAIL 30-F

TABLE 31-F

RADIUS		CHORD LENGTH	GAGE LENGTH $\overline{AB}$	DIM E (IN)	GAGE OPEN (IN)	ROTATION ANGLE ∢LPM= ∢ MPN DEGREES
R/RO	IN					
.30	28.944	36.679	4.67	9 3/4	.250	1.952
.40	38.592	49.863	5.99	11	.250	1.436
.50	48.240	60.670	7.07	12	.250	1.180
.60	57.888	67.483	7.75	12 3/4	.250	1.061
.70	67.536	69.882	7.99	12 3/4	.250	1.025
.80	77.184	67.099	7.71	12 3/4	.250	1.067
.90	86.832	53.752	6.38	11 1/4	.250	1.332
.95	91.656	40.908	5.09	10	.250	1.750

NOMENCLATURE FOR TRAILING EDGE GAGES

1. A,B,L,M,N & P ARE POINTS.
2. E & F ARE DISTANCES.
3. LINE AB = PITCH HELIX IN EXPANDED (FLATTENED) VIEW.
4. U, V (DEFINED IN L.E. GAGE NOTES 9&10) ARE AXES USED IN COMPUTER PROGRAM DEFINITION FOR GENERATING TAPES FOR N C MACHINING OF GAGES.
5. COORDINATES FOR LAYOUT OF GAGE CONTOURS ARE PROVIDED IN TABLE 37-D.

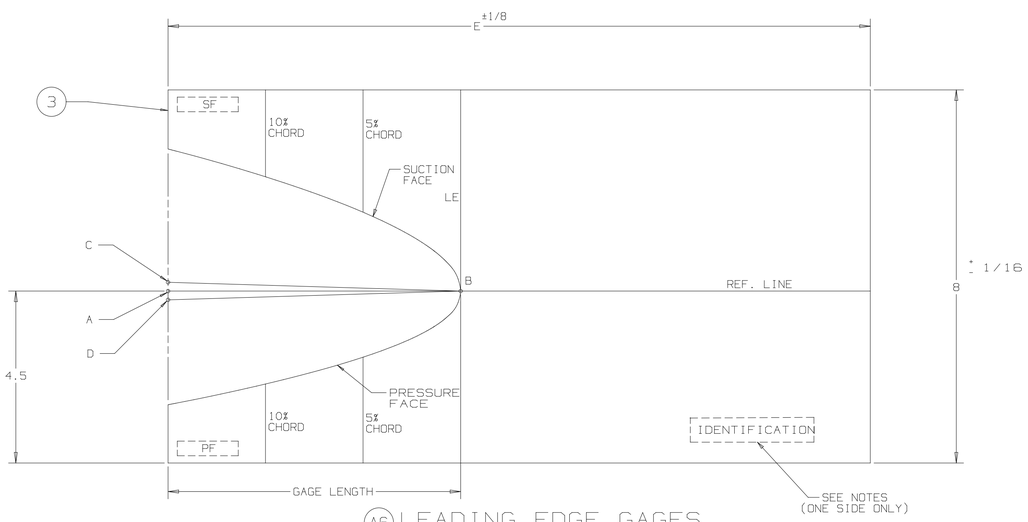

(A6) LEADING EDGE GAGES DETAIL 30-B

TABLE 31-B

RADIUS		CHORD LENGTH	GAGE LENGTH $\overline{AB}$	DIM E (IN)	GAGE OPEN (IN)	ROTATION ANGLE ∢CBA= ∢ DBA DEGREES
R/RO	IN					
.30	28.944	36.679	4.67	9 3/4	.250	1.952
.40	38.592	49.863	5.99	11	.250	1.436
.50	48.240	60.670	7.07	12	.250	1.180
.60	57.888	67.483	7.75	12 3/4	.250	1.061
.70	67.536	69.882	7.99	12 3/4	.250	1.025
.80	77.184	67.099	7.71	12 3/4	.250	1.067
.90	86.832	53.752	6.38	11 1/4	.250	1.332
.95	91.656	40.908	5.09	10	.250	1.750

NOMENCLATURE FOR LEADING EDGE GAGES

1. A, B, C AND D ARE POINTS.
2. E IS A DISTANCE.
3. LINE AB = PITCH HELIX IN EXPANDED (FLATTENED) VIEW.
4. U, V (DEFINED IN L.E. GAGE NOTES 6 & 7) ARE AXES USED IN COMPUTER PROGRAM DEFINITION FOR GENERATING TAPES FOR N C MACHINING OF GAGES.
5. COORDINATES FOR LAYOUT OF GAGE CONTOURS ARE PROVIDED IN TABLE 37-H.

TRAILING EDGE GAGE NOTES

SEE DETAIL 30-F AND TABLE 31-F

(A1) 1. THE GAGE CONTOUR HAS BEEN DEVELOPED FROM THE BLADE SURFACE MODEL BY INTERSECTING THE BLADE SURFACE WITH A PLANE WHICH PASSES THROUGH THE 90%CHORD POINTS ON THE PF AND SF AND THE THEORETICAL TE POINT.

2. FOR MANUAL LAYOUT OF "OPENED" GAGES, THE GAGE HAS BEEN OPENED BY PIVOTING EACH CONTOUR ABOUT POINT P, BY THE AMOUNT SHOWN IN TABLE 31-F AS SHOWN IN DETAIL 30-F.

3. POINT B IS THE TRAILING EDGE POINT ON PITCH HELIX (100%CHORD)

4. DISTANCE AB IS EQUAL TO "GAGE LENGTH."

5. LINE MP IS PARALLEL TO LINE AB.

6. LINE ALMN IS PERPENDICULAR TO LINE AB.

7. DISTANCE ML= DISTANCE MN= HALF OF GAGE OPENING (SEE TABLE 31-F).

8. FOR PURPOSE OF GAGE DESIGN AND APPLICATION, THE ENTIRE CHISEL EDGE IS CONSIDERED TO BE PART OF THE SUCTION FACE.

9. AXIS "U" IS COINCIDENT WITH LINE AB. U=0 AT POINT B. U IS POSITIVE TOWARDS THE LEADING EDGE. AXIS V IS POSITIVE TOWARDS THE SUCTION FACE, NEGATIVE TOWARDS THE PRESSURE FACE.

10. GAGES SHALL BE FLAT.

(A1) 11. THE FOLLOWING LINES AND IDENTIFYING CHARACTERS SHALL BE SHOWN ON BOTH SIDES OF EACH TRAILING EDGE GAGE (DO NOT STAMP).

A. EXTENSION OF LINE AB & PM TO EDGE OF GAGE.

B. LINE PERPENDICULAR TO LINE AB AT POINT B LABELED "TE".

C. LINE MARKING LOCATION OF 90%AND 95%CHORD ON PF AND SF.

D. LETTERS "SF" & "PF" IN THE UPPER & LOWER CORNER TO INDICATE SUCTION FACE AND PRESSURE FACE CONTOURS RESPECTIVELY.

(B1) E. GAGE IDENTIFICATION AS FOLLOWS:

1. "LPD-17 CLASS"
2. "DWG 245-7622724 REV _"
3. "TE GAGE"
4. "R/RO=_____ "
5. "INSP" OR "MFG" (FOR INSPECTION OR MANUFACTURING GAGES AS APPLICABLE).
6. "OPEN_____INCH TOTAL IN_____ INCHES" (FILL IN FIRST BLANK WITH DISTANCE LN IN TABLE 2ND BLANK WITH GAGE LENGTH).
7. "NSN_____" (TO BE ASSIGNED BY USN).
8. (A2) "GAGE SERIAL NUMBER:_____ "

LEADING EDGE GAGE NOTES

SEE DETAIL 30-B AND TABLE 31-B

(A3) 1. THE GAGE CONTOUR HAS BEEN DEVELOPED FROM THE BLADE SURFACE MODEL BY INTERSECTING THE BLADE SURFACE WITH A PLANE WHICH PASSES THROUGH THE 10%CHORD POINT ON THE PF, THE SF AND THE THEORTICAL LE POINT.

2. FOR MANUAL LAYOUT OF "OPENED" GAGES, THE GAGE HAS BEEN OPENED BY PIVOTING EACH CONTOUR ABOUT POINT B, BY THE AMOUNT SHOWN IN TABLE 31-B AS SHOWN IN DETAIL 30-B.

3. POINT B IS THE LEADING EDGE POINT ON THE PITCH HELIX.

4. DISTANCE AB IS EQUAL TO GAGE LENGTH.

5. LINE CAD IS PERPENDICULAR TO LINE AB.

6. DISTANCE AC = DISTANCE AD = HALF OF GAGE OPENING (SEE TABLE 31-B)

(C1) 7. AXIS "U" IS COINCIDENT WITH LINE AB. U=0 AT POINT B. U IS POSITIVE TOWARDS THE 10% CHORD. AXIS "V" IS PERPENDICULAR TO AXIS "U". V=0 AT POINT A. V IS POSITIVE TOWARD POINT C. NEGATIVE TOWARD POINT D.

8. GAGES SHALL BE FLAT.

(A3) 9. THE FOLLOWING LINES AND IDENTIFYING CHARACTERS SHALL BE SHOWN ON BOTH SIDES OF EACH LEADING EDGE GAGE. ENGRAVE OR ETCH. (DO NOT STAMP.)

A. EXTENSION OF LINE AB TO EDGE OF GAGE.

B. LINE PERPENDICULAR TO LINE AB AT POINT B LABELED "LE".

C. LINE MARKING LOCATION OF 5%AND 10%CHORD ON PF AND SF.

D. LETTERS "SF" & "PF", IN THE UPPER AND LOWER CORNER TO INDICATE SUCTION FACE AND PRESSURE FACE CONTOURS RESPECTIVELY.

E. GAGE IDENTIFICATION AS FOLLOWS: (ONE SIDE ONLY)

1. "LPD 17 CLASS"
2. (B1) "DWG 245-7622724 REV _"
3. "LE GAGE"
4. "R/RO=_____ "
5. "INSP "OR "MFG" (FOR INSPECTION OR MANUFACTURING GAGES AS APPLICABLE).
6. "OPEN_____INCH TOTAL IN_____ INCHES" (FILL IN FIRST BLANK WITH DISTANCE CD IN TABLE SECOND BLANK WITH GAGE LENGTH).
7. "NSN_____ " (TO BE ASSIGNED BY USN).
8. (A4) "GAGE SERIAL NUMBER:_____ "

REVISIONS

ZONE	REV	DESCRIPTION	DATE	DWN	CK	ENGR
F,H,28 E28 C,D,28 B28 F31 B31	A	TRAILING EDGE GAGE NOTES 1) NOTE 1.11.A.B.C & D UPDATED 2) NOTE 11.E.8 ADDED LEADING EDGE GAGE NOTES 3) NOTE 1.9.B.C.D. & E UPDATED 4) NOTE 9.E.8 ADDED 5) DETAIL 30-F GENERAL UPDATE 6) DETAIL 30-B GENERAL UPDATE CHANGES PER CUSTOMER COMMENTS INCORPORATES CN-030-01	11/26/02	RWA	WJC	HTS MZN 11/27/02
A25 B28 F28	B	1) NAVSEA DWG NUMBER ADDED. INCORPORATES CN-062-03	10/6/03	JAE	WJC	
D28 ALL	C	1) MODIFIED NOTE 7 OF LEADING EDGE NOTES "U=0 AT POINT B" WAS "POINT A" "POSITIVE TOWARDS THE 10% CHORD" WAS "LEADING EDGE" 2) UPDATED SHEET FORMAT INCORPORATES CN-072-23	1/8/26	ZJH	JLY 1/13/26	RTD 1/13/26

DEPARTMENT OF THE NAVY
NAVAL SEA SYSTEMS COMMAND

PROPELLER BLADE GAGE DATA
(LPD-17 CLASS)

DRAWING NO. 112551003

SIZE	FSCM NO	NAVSEA DRAWING NO.	REV
E	43689	245 7622724	C

SCALE: NONE | EST WT: NOT APPLICABLE | SHEET 4 OF 8

245-7622724 SH 4

P1-F1

REVISIONS						
ZONE	REV	DESCRIPTION	DATE	DWN	CK	ENGR
H37 D37	A	1) TABLE 37-H DATA UPDATED. 2) TABLE 37-D 0.70R COLUMN DATA UPDATED. CHANGES PER CUSTOMER COMMENTS INCORPORATES CN-030-01	11/26/02	RWA	WJC	HTS MFZ 11/27/02
H37	B	1) NAVSEA DWG NUMBER ADDED. INCORPORATES CN-062-03	11/26/02	JAE	WJC	
ALL	C	1) UPDATED SHEET FORMAT INCORPORATES CN-072-23	1/8/26	ZJH	JDY 1/13/26	RTD 1/13/26

(A1)

TABLE 37-H

COORDINATES FOR MANUAL LAYOUT
OF LEADING EDGE GAGES
(SEE DETAIL 46-C AND TABLES 45-C & 47-C)

	0.30 R		0.40 R		0.50 R		0.60 R		0.70 R		0.80 R		0.90 R		0.95 R	
	U	V	U	V	U	V	U	V	U	V	U	V	U	V	U	V
PF	4.6032	-1.9782	5.9318	-1.4037	6.9832	-1.4599	7.6634	-1.2246	7.8693	-0.9747	7.5264	-0.9407	6.1211	-1.1671	4.9131	-1.0523
	3.5716	-1.7948	5.3664	-1.3542	6.3259	-1.3940	6.9503	-1.1760	7.1409	-0.9483	6.8323	-0.9030	5.5553	-1.0914	4.4527	-0.9993
	3.0590	-1.6865	4.8013	-1.2999	5.6688	-1.3254	6.2373	-1.1252	6.4126	-0.9195	6.1383	-0.8639	4.9895	-1.0156	3.9926	-0.9443
	2.5496	-1.5641	4.2368	-1.2406	5.0121	-1.2538	5.5245	-1.0716	5.6844	-0.8876	5.4445	-0.8229	4.4238	-0.9393	3.5327	-0.8867
	2.0446	-1.4242	3.6729	-1.1754	4.3558	-1.1788	4.8120	-1.0146	4.9564	-0.8520	4.7507	-0.7793	3.8582	-0.8619	3.0733	-0.8263
	1.5470	-1.2603	3.1098	-1.1038	3.6999	-1.0999	4.0999	-0.9534	4.2286	-0.8115	4.0573	-0.7320	3.2929	-0.7826	2.6143	-0.7622
	1.0617	-1.0632	2.5479	-1.0238	3.0446	-1.0155	3.3883	-0.8859	3.5013	-0.7641	3.3642	-0.6792	2.7280	-0.7001	2.1561	-0.6932
	0.6030	-0.8110	1.9880	-0.9305	2.3908	-0.9208	2.6778	-0.8081	2.7748	-0.7058	2.6718	-0.6179	2.1640	-0.6120	1.6990	-0.6169
	0.3937	-0.6537	1.4327	-0.8134	1.7404	-0.8058	1.9696	-0.7113	2.0500	-0.6287	1.9809	-0.5421	1.6015	-0.5147	1.2441	-0.5288
	0.2079	-0.4694	0.8899	-0.6483	1.0993	-0.6472	1.2680	-0.5755	1.3302	-0.5146	1.2936	-0.4391	1.0422	-0.4007	0.7938	-0.4194
PF	0.0627	-0.2522	0.3799	-0.4014	0.4832	-0.4107	0.5838	-0.3706	0.6242	-0.3353	0.6156	-0.2868	0.4904	-0.2550	0.3554	-0.2702
LE	0.0007	-0.0002	0.0009	0.0000	0.0000	-0.0002	0.0000	0.0000	0.0000	0.0000	0.0003	0.0000	0.0000	0.0000	0.0000	0.0000
SF	0.0573	0.2711	0.3867	0.4211	0.5003	0.4117	0.5853	0.3760	0.6318	0.3351	0.6223	0.2824	0.4933	0.2515	0.3181	0.3430
	0.2116	0.5039	0.8965	0.7194	1.1114	0.6811	1.2676	0.6057	1.3369	0.5378	1.2984	0.4514	1.0426	0.3951	0.7331	0.5844
	0.4053	0.7058	1.4269	0.9797	1.7406	0.9050	1.9636	0.7906	2.0516	0.7036	1.9821	0.5866	1.6007	0.4997	1.1747	0.7731
	0.6175	0.8884	1.9693	1.2140	2.3806	1.0966	2.6667	0.9461	2.7713	0.8460	2.6698	0.7000	2.1630	0.5795	1.6301	0.9249
	1.0701	1.2179	2.5198	1.4285	3.0275	1.2632	3.3740	1.0817	3.4940	0.9729	3.3598	0.7985	2.7275	0.6422	2.0938	1.0505
	1.5444	1.5157	3.0764	1.6269	3.6793	1.4096	4.0840	1.2025	4.2186	1.0883	4.0513	0.8858	3.2932	0.6920	2.5620	1.1563
	2.0312	1.7925	3.6376	1.8118	4.3347	1.5390	4.7959	1.3113	4.9446	1.1946	4.7439	0.9640	3.8597	0.7319	3.0338	1.2473
	2.5268	2.0530	4.2023	1.9856	4.9926	1.6546	5.5092	1.4102	5.6717	1.2931	5.4373	1.0347	4.4268	0.7637	3.5072	1.3267
	3.0296	2.2996	4.7698	2.1504	5.6525	1.7591	6.2237	1.5005	6.3997	1.3850	6.1314	1.0989	4.9942	0.7888	3.9825	1.3973
	3.5382	2.5339	5.3393	2.3075	6.3136	1.8546	6.9391	1.5836	7.1283	1.4713	6.8259	1.1575	5.5618	0.8082	4.4583	1.4605
SF	4.5694	2.9708	5.9107	2.4583	6.9759	1.9425	7.6551	1.6604	7.8575	1.5526	7.5209	1.2111	6.1295	0.8227	4.9354	1.5177

(A2)

TABLE 37-D

COORDINATES FOR MANUAL LAYOUT
OF TRAILING EDGE GAGES
(SEE DETAIL 46-C AND TABLES 45-C & 47-C)

	0.30 R		0.40 R		0.50 R		0.60 R		0.70 R		0.80 R		0.90 R		0.95 R	
	U	V	U	V	U	V	U	V	U	V	U	V	U	V	U	V
PF	4.6114	-1.8059	5.9545	-1.4094	7.0412	-1.3919	7.7235	-1.4693	7.9658	-1.3844	7.6893	-1.2382	6.3536	-1.0652	5.0562	-1.2543
	4.1493	-1.6357	5.3651	-1.2505	6.3432	-1.2306	6.9558	-1.3070	7.0837	-1.2236	6.9218	-1.1159	5.7196	-0.9613	4.5498	-1.1405
	3.6877	-1.4640	4.7747	-1.0958	5.6444	-1.0731	6.1882	-1.1456	5.3200	-0.8995	6.1549	-0.9904	5.0864	-0.8524	4.0448	-1.0203
	3.2266	-1.2909	4.1831	-0.9454	4.9445	-0.9202	5.4198	-0.9864	6.2020	-1.0613	5.3881	-0.8633	4.4540	-0.7391	3.5416	-0.8932
	2.7661	-1.1165	3.5905	-0.7991	4.2435	-0.7723	4.6506	-0.8306	4.4377	-0.7401	4.6214	-0.7361	3.8219	-0.6243	3.0400	-0.7597
	2.3059	-0.9410	2.9968	-0.6569	3.5414	-0.6302	3.8805	-0.6798	3.5546	-0.5848	3.8545	-0.6103	3.1895	-0.5112	2.5399	-0.6208
	1.8462	-0.7644	2.4024	-0.5182	2.8380	-0.4940	3.1093	-0.5349	2.6704	-0.4357	3.0871	-0.4874	2.5562	-0.4029	2.0403	-0.4800
	1.3868	-0.5869	1.8068	-0.3846	2.1332	-0.3659	2.3366	-0.3980	1.7847	-0.2962	2.3193	-0.3690	1.9217	-0.3027	1.5382	-0.3488
	0.9277	-0.4086	1.2092	-0.2605	1.4264	-0.2489	1.5621	-0.2718	0.8970	-0.1704	1.5502	-0.2573	1.2856	-0.2122	1.0311	-0.2382
	0.4688	-0.2299	0.6086	-0.1513	0.7174	-0.1466	0.7855	-0.1591	0.0065	-0.0634	0.7798	-0.1546	0.6482	-0.1320	0.5210	-0.1423
PF	0.0036	-0.0686	0.0046	-0.0634	0.0059	-0.0631	0.0062	-0.0633	0.0032	-0.0331	0.0077	-0.0636	0.0097	-0.0608	0.0112	-0.0449
TE	-0.0073	-0.0550	0.0012	-0.0330	0.0020	-0.0328	0.0027	-0.0330	-0.0072	-0.0500	0.0040	-0.0333	0.0053	-0.0306	0.0081	-0.0146
SF	0.4415	0.1022	0.5804	0.1228	0.6929	0.1176	0.7620	0.1253	0.7841	0.1381	0.7607	0.1195	0.6338	0.0848	0.5058	0.1137
	0.8952	0.2628	1.1758	0.2035	1.3976	0.1885	1.5340	0.2086	1.5807	0.2182	1.5284	0.2066	1.2682	0.1639	1.0115	0.2076
	1.3526	0.4122	1.7744	0.2572	2.1045	0.2318	2.3086	0.2647	2.3799	0.2702	2.2985	0.2705	1.9039	0.2315	1.5181	0.2961
	1.8140	0.5489	2.3740	0.2983	2.8121	0.2627	3.0840	0.3090	3.1793	0.3167	3.0695	0.3223	2.5398	0.2970	2.0241	0.3883
	2.2786	0.6741	2.9741	0.3312	3.5200	0.2869	3.8598	0.3455	3.9789	0.3607	3.8410	0.3664	3.1761	0.3595	2.5298	0.4825
	2.7458	0.7893	3.5744	0.3603	4.2279	0.3103	4.6357	0.3782	4.7787	0.4024	4.6126	0.4077	3.8126	0.4187	3.0354	0.5770
	3.2149	0.8968	4.1747	0.3896	4.9358	0.3356	5.4117	0.4108	5.5786	0.4410	5.3843	0.4478	4.4494	0.4745	3.5414	0.6691
	3.6853	0.9983	4.7749	0.4203	5.6436	0.3618	6.1876	0.4448	6.3787	0.4753	6.1561	0.4851	5.0866	0.5267	4.0482	0.7567
	4.1567	1.0952	5.3751	0.4513	6.3514	0.3874	6.9635	0.4782	7.1789	0.5050	6.9282	0.5172	5.7240	0.5751	4.5559	0.8386
SF	4.6288	1.1883	5.9753	0.4818	7.0593	0.4114	7.7396	0.5088	7.9793	0.5297	7.7005	0.5432	6.3618	0.6195	5.0648	0.9135

DEPARTMENT OF THE NAVY
NAVAL SEA SYSTEMS COMMAND

PROPELLER BLADE
GAGE DATA
(LPD-17 CLASS)

DRAWING NO. 112551003

SIZE	FSCM NO	NAVSEA DRAWING NO.	REV
E	43689	245 7622724	C

SCALE: NONE | EST WT: NOT APPLICABLE | SHEET 5 OF 8

245-7622724 SH 5

P1-F1

REVISIONS						
ZONE	REV	DESCRIPTION	DATE	DWN	CK	ENGR
B43 B43 B43 B43	A	1) VALUE FOR "E" GAGE ON PRESSURE FACE TABLE 45-C AT POINTS "U" AND "N" WAS 1.4277 2) NOTE 8 WAS ONE SIDE 3) NOTE 9 WAS NOTE 8. (D) 4) ADDED NOTE 9. (7) CHANGES PER CUSTOMER COMMENTS INCORPORATES CN-030-01.	11/26/02	RWA	WJC	HTS 11/27/02
C43 A41 A43	B	1) CHANGED WORDING OF NOTE. "SPINDLE AXIS" CHANGED TO "PROPELLER CENTER AXIS" 2) NAVSEA DWG NUMBER ADDED. INCORPORATES CN-062-03	10/6/03	JAE	WJC	
D43 ALL	C	1) ALTERED NOTE 1, REMOVED "(SEE NOTE 1015 OF REF 1)" 2) UPDATED SHEET FORMAT INCORPORATES CN-072-23	1/8/26	ZJH	JCY 1/13/26	RTD 1/13/26

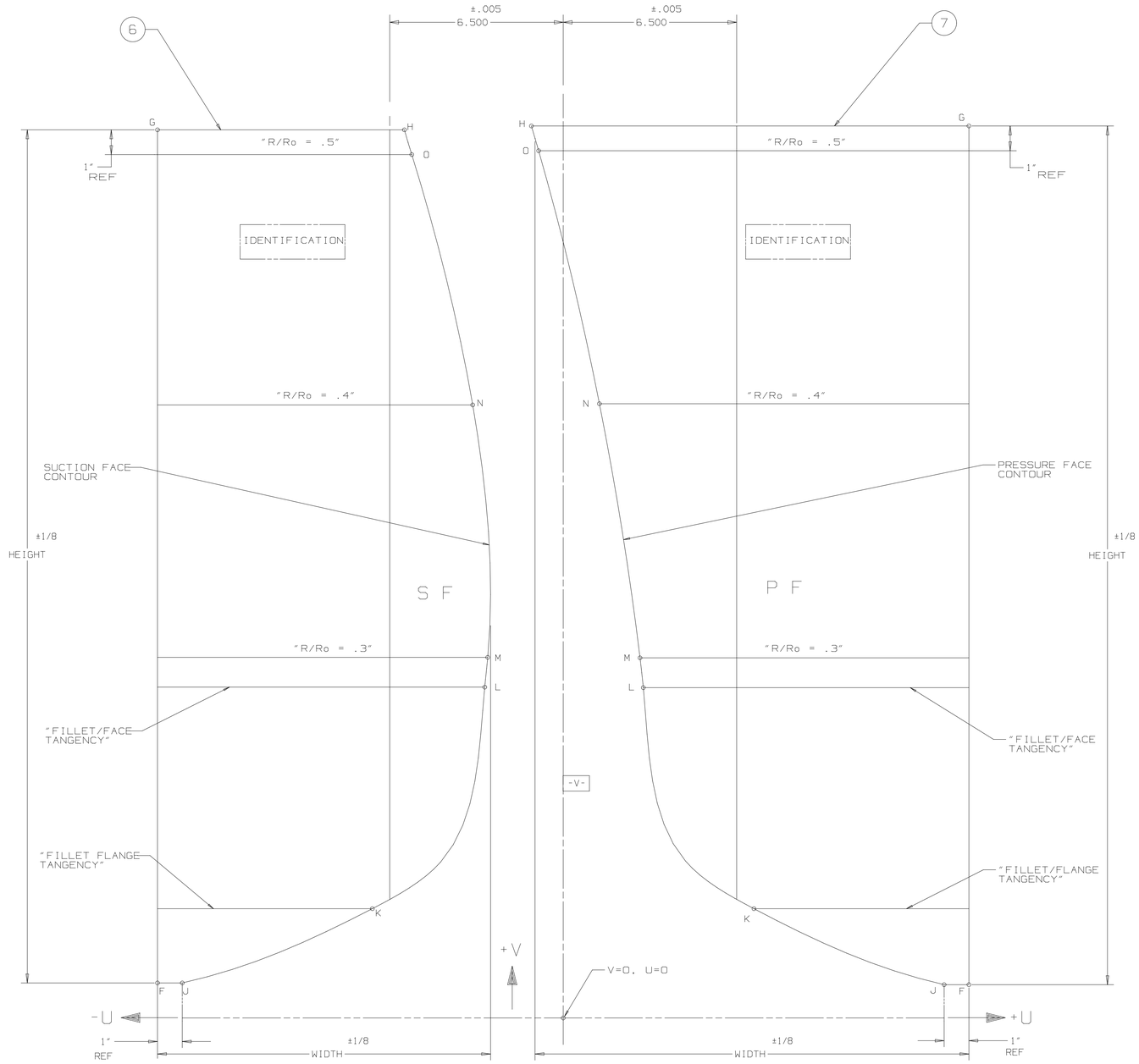

DETAIL 46-C
ONE PIECE FILLET FLANGE GAGE

SCALE: 1/2

ONE PIECE FILLET/FLANGE GAGE NOTES

SEE DETAIL 46-C AND TABLES 45-C & 47-C

NOMENCLATURE AND DEFINITIONS:

1. F, G, H, J, K, L, M, N AND O ARE POINTS.
2. U AND V ARE AXES USED IN COMPUTER PROGRAM DEFINITION OF FILLET/FLANGE REGION.
3. $\overline{JK}$ = FLANGE CONTOUR.
4. $\overline{KL}$ = FILLET CONTOUR.
5. $\overline{LMNO}$ = BLADE FACE CONTOUR.
6. J = TOP FLANGE OF BLADE PERIPHERY.
7. K = TANGENCY POINT BETWEEN FILLET AND FLANGE.
8. L = TANGENCY POINT BETWEEN FILLET AND BLADE FACE.
9. M, N AND O = POINTS ON FILLET GAGE AT WHICH CORRESPONDING POINTS ON BLADE FACES HAVE R/Ro VALUES OF 0.3, 0.4 AND 0.5 RESPECTIVELY.

NOTES:

1. EACH OF THE 5 (FIVE) PAIRS OF ONE PIECE FILLET/FLANGE GAGES REPRESENTS THE INTERSECTION OF A TRUE CUTTING PLANE WITH THE BLADE FACES, FILLET AND FLANGE. THE CUTTING PLANES ARE PERPENDICULAR TO A LINE WHICH IS PERPENDICULAR TO THE PROPELLER CENTER AXIS AND MAKES AN ANGLE OF 37.448° WITH THE Z AXIS. (B1) (C1)
2. GAGE CONTOURS SHALL BE TRUE FROM POINT J TO POINT O.
3. BREAK CORNERS AT POINTS F, G AND H.
4. THE V AXIS LIES OUTSIDE THE GAGES AS SHOWN IN DETAIL 46-C FOR THE FOLLOWING GAGES:
   (A) SUCTION A, B, C, D AND PRESSURE A.
   (B) PRESSURE B, C, D AND E. THE V AXIS LIES PARTLY ON THE REMAINING GAGE. (SEE TABLES 45-C AND 47-C)
5. GAGE EDGES $\overline{FG}$ SHALL BE APPROXIMATELY PARALLEL TO THE V AXIS.
6. GAGE EDGES $\overline{FJ}$ AND $\overline{GH}$ SHALL BE APPROXIMATELY PARALLEL TO U AXIS.
7. FOR MANUAL LAYOUT OF GAGES, THE COORDINATES GIVEN IN TABLE 52-F SHALL BE USED.
8. (A2) THE FOLLOWING LINES AND IDENTIFYING CHARACTERS SHALL BE SHOWN ON BOTH SIDES OF EACH FILLET FLANGE GAGE. (DO NOT STAMP)
   (A) LINES PARALLEL TO THE U AXIS THROUGH POINTS K, L, M, N AND O AS SHOWN IN DETAIL 46-C.
   (B) A LINE PARALLEL TO THE "V" AXIS FOR THE ENTIRE LENGTH OF THE GAGE FOR SUCTION FACE GAGES, THE LINE SHALL HAVE A CONSTANT "U" VALUE OF 6.500 INCHES AND FOR PRESSURE FACE GAGES A CONSTANT "U" VALUE OF 6.500 INCHES AS SHOWN IN DETAIL 46-C.
   (C) LABELS FOR EACH OF THE LINES SPECIFIED UNDER (A) AND (B) AS SHOWN BY THE CAPTIONS ENCLOSED IN QUOTATION MARKS IN DETAIL 46-C.
9. (A3) GAGE IDENTIFICATION AS FOLLOWS: ONE SIDE ONLY
   (1) "LPD-17-CLASS"
   (2) "DWG 245-7622724 REV _"
   (3) "FILLET GAGE (SUCTION OR PRESSURE AS APPROPRIATE) FACE".
   (4) GAGE DESIGNATION BY LETTER AND THETA VALUE.
   (5) "INSP" OR "MFG" (FOR INSPECTION OR MANUFACTURING GAGES, AS APPLICABLE.
   (6) "NSN_____ (TO BE ASSIGNED BY USN). (B2)
   (7) "GAGE SERIAL NUMBER:_____ " (A4)

TABLE 47-C
SUCTION FACE

	"A"GAGE		"B"GAGE		"C"GAGE		"D"GAGE		"E"GAGE	
POINT	U	V	U	V	U	V	U	V	U	V
J	8.1883	2.6226	11.57687	1.9773	12.54374	1.04971	11.69153	0.41114	8.5282	0.3112
K	4.1233	3.2007	5.8925	3.6408	6.6895	3.6752	6.2323	3.5711	4.8592	2.5833
L	1.9092	5.5734	3.1030	6.3195	3.7852	6.2824	3.9404	5.8534	3.6363	4.1536
M	1.9791	7.5424	3.0208	7.8459	3.6356	7.7163	3.7584	5.2779	3.2752	6.6711
N	2.4539	17.3076	3.3193	17.4979	3.9377	17.3798	4.1695	17.0213	4.0146	16.4890
O	2.1920	26.9771	3.3497	27.1461	4.3642	27.0297	5.1144	26.6648	5.6292	26.0892
WIDTH	8.34		10.62		11.01		10.06		7.38	
HEIGHT	24.85		25.67		26.48		26.75		26.28	

TABLE 45-C
PRESSURE FACE

	"A"GAGE		"B"GAGE		"C"GAGE		"D"GAGE		"E"GAGE	
POINT	U	V	U	V	U	V	U	V	U	V
J	-8.1552	0.3391	-11.54803	0.3844	-12.51396	1.02271	-11.68317	1.99824	-8.5115	2.7151
K	-5.3560	2.2158	-6.3944	3.5111	-6.6630	3.6749	-5.8543	3.6546	-4.1345	3.3067
L	-4.0536	4.6135	-4.0939	5.7336	-3.8776	5.7151	-3.2976	5.4151	-1.4507	6.7617
M	-3.9552	6.4400	-3.7202	7.2440	-3.1742	7.7326	-2.3553	7.8384	-1.2138	7.4803
N	-2.7801	16.6618	-1.8501	17.2450	-0.8703	17.4899	0.1817	17.3884	1.4032	16.9121
O	-2.3570	26.5350	-0.9968	27.0019	0.3942	27.1465	1.8407	26.9634	3.3708	26.4348
WIDTH	7.86		12.64		15.03		15.66		14.04	
HEIGHT	26.97		27.12		26.62		25.46		24.22	

(A1)

DEPARTMENT OF THE NAVY
NAVAL SEA SYSTEMS COMMAND

PROPELLER BLADE GAGE DATA
(LPD-17 CLASS)

DRAWING NO. 112551003

SIZE	FSCM NO	NAVSEA DRAWING NO.	REV
E	43689	245 7622724	C

SCALE: NONE | EST WT: NOT APPLICABLE | SHEET 6 OF 8

FMB NO 245-7622724 REV C

P1-F1

REVISIONS						
ZONE	REV	DESCRIPTION	DATE	DWN	CK	ENGR
A49	A	1) ADDED NAVSEA DWG NUMBER. INCORPORATES CN-062-03	10/6/03	JAE	WJC	
E51 F51 B55 C52 ALL	C	1) ALTERED VALUE OF "D" GAGE SUCTION FACE, V. 7.2779 WAS 5.2779 2) ALTERED VALUE OF "E" GAGE PRESSURE FACE, U. 1.4077 WAS 1.4277 3) ADDED TABLE 55-B 4) ADDED DETAIL 52-C 5) UPDATED SHEET FORMAT INCORPORATES CN-072-23	1/8/26	ZJH	JOY 1/13/26	RTD 1/13/26

TABLE 52-F

COORDINATES FOR MANUAL LAYOUT
OF FILLET/FLANGES GAGES
(SEE DETAIL 46-C AND TABLES 45-C & 47-C)

C1 C2

"A" GAGE				"B" GAGE				"C" GAGE				"D" GAGE				"E" GAGE			
PRESURE FACE		SUCTION FACE		PRESURE FACE		SUCTION FACE		PRESURE FACE		SUCTION FACE		PRESURE FACE		SUCTION FACE		PRESURE FACE		SUCTION FACE	
U	V	U	V	U	V	U	V	U	V	U	V	U	V	U	V	U	V	U	V
-2.3541	27.0350	2.1695	27.4771	-0.9643	27.5020	3.3549	27.6472	0.4507	27.6462	4.3912	27.5297	1.9182	27.4627	5.1744	27.1643	3.4666	26.9343	5.7244	26.5897
-2.3570	26.5350	2.1920	26.9771	-0.9968	27.0019	3.3497	27.1461	0.3942	27.1465	4.3642	27.0297	1.8407	26.9634	5.1144	26.6648	3.3708	26.4348	5.6292	26.0892
-2.4030	24.3349	2.2893	24.8370	-1.1394	24.8531	3.3548	25.0625	0.1480	24.9687	4.2667	24.9545	1.5037	24.7680	4.8840	24.5887	2.9509	24.2217	5.2322	23.9107
-2.4720	22.1354	2.3742	22.6963	-1.2997	22.7055	3.3633	22.9789	-0.1125	22.7925	4.1807	22.8788	1.1508	22.5752	4.6734	22.5105	2.5196	22.0107	4.8537	21.7289
-2.5729	19.9372	2.4310	20.5547	-1.4916	20.5605	3.3592	20.8953	-0.4031	20.6201	4.0905	20.8032	0.7628	20.3883	4.4706	20.4315	2.0554	19.8064	4.4850	19.5455
-2.7049	17.7406	2.4550	18.4125	-1.7157	18.4187	3.3392	18.8118	-0.7218	18.4517	3.9964	18.7279	0.3441	18.2071	4.2795	18.3513	1.5630	17.6083	4.1402	17.3582
-2.7801	16.6618	2.4539	17.3076	-1.8501	17.2450	3.3193	17.4979	-0.8703	17.4899	3.9377	17.3798	0.1817	17.3884	4.1695	17.0213	1.4077	16.9121	4.0146	16.4890
-2.8654	15.5459	2.4431	16.2702	-1.9675	16.2799	3.3047	16.7285	-1.0632	16.2868	3.9065	16.6523	-0.0945	16.0297	4.1122	16.2692	1.0532	15.4141	3.8380	15.1646
-3.0672	13.3546	2.3833	14.1288	-2.2632	14.1468	3.2472	14.6457	-1.4514	14.1298	3.8158	14.5768	-0.5732	13.8609	3.9654	14.1854	0.5083	13.2284	3.5777	12.9656
-3.3220	11.1688	2.2610	11.9900	-2.6268	12.0242	3.1526	12.5643	-1.9236	11.9898	3.7073	12.5022	-1.1260	11.7099	3.8208	12.1016	-0.0995	11.0594	3.3464	10.7633
-3.6184	8.9883	2.1049	9.8533	-3.0655	9.9159	3.0406	10.4837	-2.4934	9.8736	3.5962	10.4277	-1.7635	9.5824	3.6944	10.0166	-0.7589	8.9054	3.2103	8.5538
-3.9130	6.8076	1.9864	7.7143	-3.5720	7.8229	3.0078	8.4006	-3.1565	7.7848	3.5980	8.3508	-2.3553	7.8384	3.7088	7.9286	-1.2138	7.4803	3.2752	6.6711
-3.9552	6.4400	1.9791	7.5424	-3.7202	7.2440	3.0208	7.8459	-3.1742	7.7326	3.6356	7.7163	-2.4848	7.4819	3.7584	7.2779	-1.4507	6.7617	3.3075	6.3430
-4.0536	4.6135	1.9092	5.5734	-4.0939	5.7336	3.1030	6.3195	-3.8776	5.7151	3.7852	6.2824	-3.2976	5.4151	3.9404	5.8534	-2.2253	4.6467	3.6363	4.1536
-4.1108	3.8927	2.0418	4.6839	-4.3959	4.9456	3.3262	5.4090	-4.3020	4.9051	4.1055	5.2760	-3.7167	4.7151	4.2031	5.0326	-2.9788	3.6936	4.0384	3.2018
-4.3368	3.2058	2.5084	3.9168	-4.9100	4.2766	3.9129	4.5344	-4.9503	4.2603	4.7557	4.4441	-4.3190	4.1647	4.7091	4.3350	-4.1345	3.3067	4.8592	2.5833
-4.7536	2.6155	3.2468	3.4053	-5.5953	3.7843	4.8645	3.8847	-5.7622	3.8393	5.6541	3.8892	-5.0514	3.8047	5.4095	3.8330	-5.5849	3.2022	5.7424	2.2583
-5.3560	2.2158	4.1233	3.2007	-6.3944	3.5111	5.8925	3.6408	-6.6630	3.6749	6.6895	3.6752	-5.8543	3.6546	6.2323	3.5711	-7.0273	3.0172	6.5898	1.8493
-6.1972	1.8262	5.1843	3.1206	-7.8299	3.1420	7.2943	3.5074	-8.2008	3.4993	8.3854	3.4684	-7.3193	3.5321	7.7544	3.2384	-8.2686	2.7745	7.3857	1.3478
-6.9911	1.3478	6.2411	2.9985	-9.1760	2.5219	8.6744	3.2285	-9.6752	3.0309	9.9984	2.9084	-8.7620	3.2510	9.1849	2.6214	-8.5115	2.7151	8.1107	0.7484
-7.7190	0.7742	7.2902	2.8218	-10.3852	1.6653	10.0105	2.7853	-11.0356	2.2936	11.4620	2.0284	-10.1567	2.7879	10.4693	1.7400			8.3608	0.4969
-7.9838	0.5204	7.7488	2.7269	-11.24403	0.7847	11.2732	2.1635	-12.23406	1.31531	12.3716	1.2311	-11.47037	2.12974	11.5437	0.6127			8.5282	0.3112
-8.1552	0.3391	7.9454	2.6819	-11.40043	0.5864	11.36447	2.1092	-12.51396	1.02271	12.54374	1.04971	-11.68317	1.99824	11.69153	0.41114				
		8.1883	2.6226	-11.54803	0.3844	11.57687	1.9773												

C3

TABLE 55-C

COORDINATES OF POINTS ON BLADE SURFACES CORRESPONDING TO LOCATION OF FILLET/FLANGE GAGES

FILLET GAGE	R/Ro	SUCTION FACE BLADE SURFACE COORDINATES				PRESSURE FACE BLADE SURFACE COORDINATES			
		θ°	X	Y	Z	θ°	X	Y	Z
A	FLG	———	12.364	23.775	-0.520	———	2.269	21.613	12.127
	0.30	8.384	8.734	28.635	4.220	17.968	5.128	27.533	8.928
	0.45	5.141	8.988	43.241	3.890	10.307	6.017	42.716	7.768
B	FLG	———	10.734	23.202	-6.076	———	-3.108	21.679	11.998
	0.30	1.085	5.662	28.939	0.548	11.766	1.561	28.337	5.902
	0.45	0.371	5.866	43.415	0.281	5.314	3.001	43.230	4.021
C	FLG	———	7.636	22.324	-9.716	———	-7.391	22.297	9.906
	0.30	-5.492	2.317	28.809	-2.770	5.211	-1.818	28.826	2.629
	0.45	-4.211	2.637	43.299	-3.188	0.327	0.006	43.416	0.248
D	FLG	———	3.430	21.706	-11.908	———	-10.563	23.223	6.364
	0.30	-11.398	-1.309	28.371	-5.720	-1.728	-5.021	28.931	-0.873
	0.45	-8.480	-0.786	42.941	-6.402	-4.752	-2.935	43.267	-3.597
E	FLG	———	-2.218	21.590	-12.217	———	-12.329	23.868	0.986
	0.30	-16.416	-5.313	27.764	-8.180	-9.179	-8.040	28.573	-4.617
	0.45	12.469	-4.396	42.392	-9.374	-9.974	-5.816	42.760	-7.520

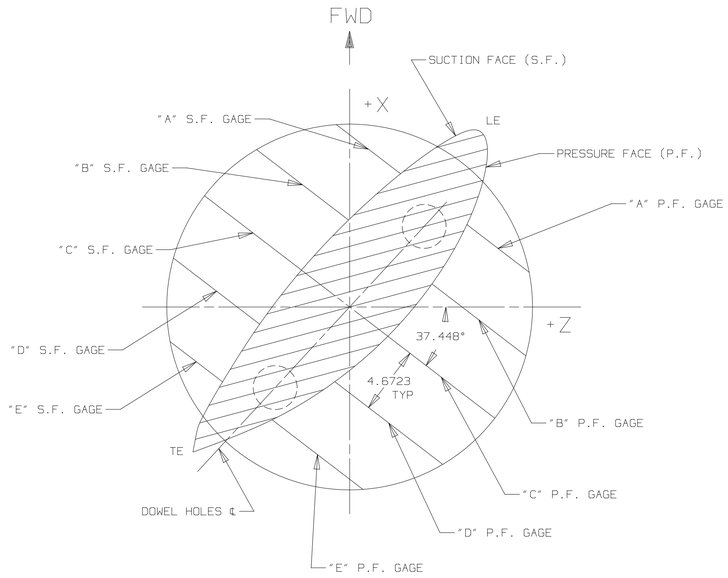

C4

DETAIL 52-B

DEPARTMENT OF THE NAVY
NAVAL SEA SYSTEMS COMMAND

PROPELLER BLADE
GAGE DATA
(LPD-17 CLASS)

DRAWING NO.			
112551003			
SIZE	FSCM NO	NAVSEA DRAWING NO.	REV
E	43689	245 7622724	C
SCALE: NONE	EST WT: NOT APPLICABLE	SHEET 7 OF 8	

245-7622724 R7

P1-F1

REVISIONS						
ZONE	REV	DESCRIPTION	DATE	DWN	CK	ENGR
F62 G63 F63	A	1) TABLES 62-F AND 62-C DATA UPDATED. 2) REVISED NOTE 5, WAS ONE SIDE NOTE 5.E ADDED ONE SIDE ONLY 3) ADDED NOTE 5.E.(6) CHANGES PER CUSTOMER COMMENTS INCORPORATES CN-030-01	11/26/02	RWA	WJC	HJS 11/27/02 MFN
G63 G63 A57	B	1) NOTE REWORDED TO ADD GAGE LOCATION 2) NAVSEA DWG NUMBER ADDED. INCORPORATES CN-062-03	10/6/03	JAE	WJC	
H63 D59 C62 B60 ALL	C	1) ALTERED NOTE 1, CORRECTED HOW CUTTING PLANES ARE MADE 2) "+U" WAS "-U" 3) REMOVED LINE 4) ADDED TABLE 60-B 5) UPDATED SHEET FORMAT INCORPORATES CN-072-23	1/8/26	ZJH	JDI 1/13/26	RTD 1/13/26

TIP GAGE NOTES

C1 1. THREE TIP GAGES REQUIRED.THE CONTOURS OF THE GAGE REPRESENT THE INTERSECTIONS OF A TRUE CUTTING PLANE WITH THE BLADE FACES. THE CUTTING PLANES ARE MADE NORMAL TO THE FLAT UNDERSIDE OF THE FLANGE, THROUGH THE 0.95R 25%, 50%, AND 75% CHORD POINTS ON THE PRESSURE FACE, AND THROUGH THE 0.95R 25%, 50%, AND 75% CHORD POINTS ON THE SUCTION FACE.

2. THE ORIGIN OF THE COORDINATE SYSTEM FOR MANUAL LAYOUT OF THE TIP GAGE IS POINT "B".

3. THE GAGES ARE TO BE SPLIT AT THE TIP. THE CONTOUR WILL CONTINUE 1/4" PAST THE TIP ON EACH SECTION.

4. CONTOURS SHALL BE TRUE FROM POINT "B" TO POINTS CORRESPONDING TO 1/2" BEYOND THE 0.90 RADIUS.

A2 5. THE FOLLOWING LINES AND IDENTIFYING CHARACTERS SHALL BE SHOWN ON BOTH SIDES OF THE TIP GAGE (DO NOT STAMP)

A. THE EXTENSION OF THE "U" AXIS AS SHOWN IN DETAIL 59-C.

B. THE "V" AXIS AS SHOWN IN DETAIL 59-C.

C. LINES PARALLEL TO THE "V" AXIS AT R/Ro=.95 AND R/Ro=.90 FOR EACH FACE CONTOUR AS SHOWN IN DETAIL 59-C. LINES SHALL BE LABELED AS SHOWN IN DETAIL 59-C.

D. THE LETTERS "SF" AND "PF" TO INDICATE SUCTION FACE AND PRESSURE FACE CONTOURS RESPECTIVELY.

E. GAGE IDENTIFICATION AS FOLLOWS: (ONE SIDE ONLY)

B1 (1.)"LPD-17 CLASS"
(2.)"DWG NO 245-7622724 REV_"
(3.)"TIP GAGE___" (25%C, 50%C OR 75%C) AS APPLICABLE.
B2 (4.)"INSP" OR "MFG" (FOR INSPECTION OR MANUFACTURING OF GAGES),AS APPLICABLE.
(5.)"NSN_____"(TO BE ASSIGNED BY U.S.N.)
A3 (6.)"GAGE SERIAL NUMBER:_____"

A1 TABLE 62-F
TIP GAGE CONTOURS

PRESSURE FACE					
25%CHORD		50%CHORD		75%CHORD	
U	V	U	V	U	V
0.0456	0.2500	0.0493	0.2500	0.0709	0.2500
-0.0002	0.0000***	0.0001	0.0000***	0.0000	0.0000***
0.0488	-0.1836	0.0142	-0.1610	0.0034	-0.0977
0.0950	-0.2500	0.2490	-0.4977	0.0700	-0.3075
0.1984	-0.3470	0.6097	-0.7060	0.1933	-0.4794
0.3949	-0.4523	1.0033	-0.8452	0.3419	-0.6104
0.6057	-0.5258	1.4099	-0.9403	0.5079	-0.7189
0.8227	-0.5788	1.8225	-1.0051	0.6845	-0.8090
1.0425	-0.6185	2.2380	-1.0481	1.0000	-0.9353
1.2641	-0.6466	2.7607	-1.0803	1.3366	-1.0413
1.6969	-0.6700	3.2844	-1.0928	2.0102	-1.2017
2.1305	-0.6668	3.8081	-1.0887	2.6925	-1.3217
2.5635	-0.6448	4.1936	-1.0758**	3.3796	-1.4108
2.9678	-0.6083**	4.3315	-1.0692	4.0694	-1.4759
3.3710	-0.5600	4.8543	-1.0365	4.7607	-1.5227
3.7730	-0.5032	5.3765	-0.9957	4.8502	-1.5276**
4.1741	-0.4406	5.8984	-0.9515	5.4528	-1.5569
4.5748	-0.3752	6.4204	-0.9084	6.1450	-1.5864
4.9754	-0.3091	6.9429	-0.8709	6.8371	-1.6192
5.3761	-0.2438	7.4658	-0.8415	7.5287	-1.6617
5.7773	-0.1812	7.9892	-0.8220	8.2193	-1.7181
6.1791	-0.1229	8.5130	-0.8145	8.9083	-1.7910
6.5817	-0.0707	9.0367	-0.8207	9.5953	-1.8814
6.9853	-0.0258*	9.0601	-0.8213*	9.7802	-1.9087*
7.3896	0.0109	9.5601	-0.8410	10.2799	-1.9884

* 0.90R
** 0.95R
*** TIP CL

A1 TABLE 62-C
TIP GAGE CONTOURS

C3

SUCTION FACE					
25%CHORD		50%CHORD		75%CHORD	
U	V	U	V	U	V
0.1078	-0.2500	0.0794	-0.2500	0.0454	-0.2500
0.0000	0.0000***	0.0000	0.0000***	0.0000	0.0000***
0.0347	0.2280	0.0289	0.2394	0.0680	0.2467
0.1066	0.4720	0.2396	0.6979	0.2172	0.4563
0.2058	0.7062	0.5751	1.0772	0.4080	0.6293
0.3324	0.9267	0.9732	1.3911	0.6210	0.7744
0.4842	1.1308	1.4060	1.6554	0.8460	0.9002
0.6570	1.3175	1.8613	1.8791	1.0789	1.0101
0.8457	1.4882	2.3331	2.0656	1.0798	1.0088
1.0449	1.6464	2.8417	2.2207	1.7330	1.2229
1.2502	1.7968	3.3609	2.3357	2.4087	1.3527
1.6667	2.0498	3.8874	2.4102	3.0938	1.4168
2.1043	2.2642	4.3082	2.4400	3.7820	1.4264
2.5586	2.4405**	4.4181	2.4435**	4.4690	1.3851
3.0262	2.5777	4.9498	2.4365	5.0254	1.3108**
3.5039	2.6741	5.4798	2.3922	5.1505	1.2890
3.9876	2.7346	6.0067	2.3198	5.8227	1.1415
4.4740	2.7658	6.5304	2.2273	6.4847	0.9529
4.9614	2.7742	7.0516	2.1209	7.1388	0.7385
5.4488	2.7661	7.5710	2.0067	7.7881	0.5099
5.9358	2.7462	8.0899	1.8896	8.4356	0.2761
6.4226	2.7204	8.6093	1.7752	9.0844	0.0460
6.9093	2.6929	9.1303	1.6681	9.7363	-0.1749
7.3830	2.6665*	9.1529	1.6637*	9.8924	-0.2258*
7.8829	2.6425	9.6529	1.5693	10.3924	-0.3833

* 0.90R
** 0.95R
*** TIP CL

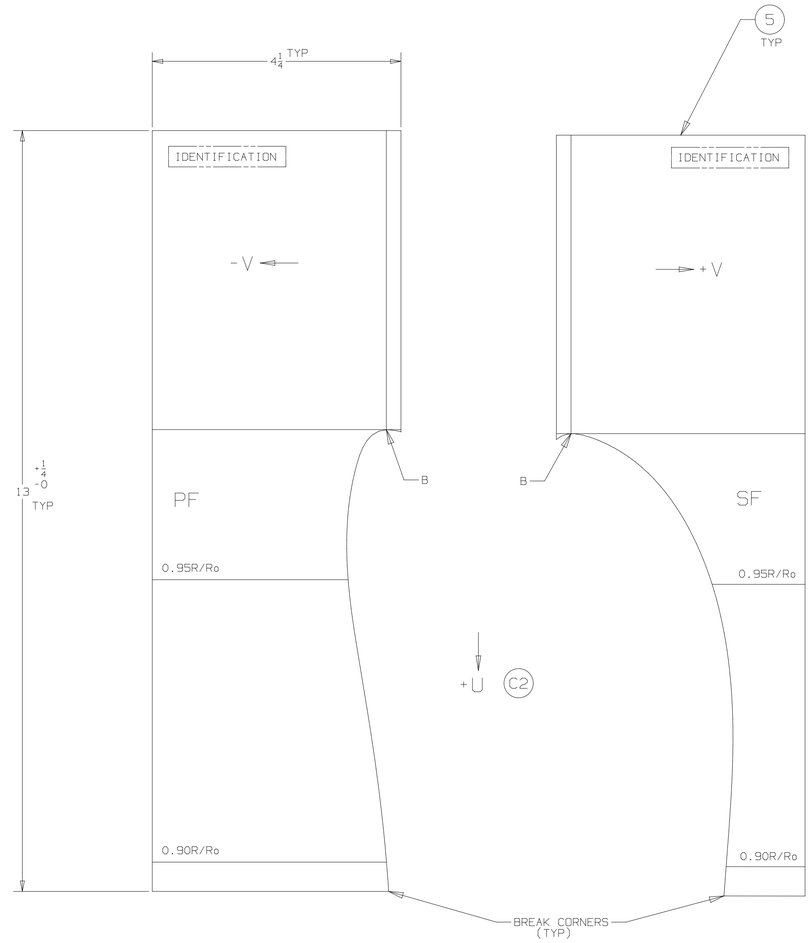

TIP GAGE
DETAIL 59-C
(SEE TABLES 62-C AND 62-F)

NOMENCLATURE:
1.B IS A POINT
2.U & V ARE AXES

C4 TABLE 60-B
COORDINATES OF POINTS ON BLADE SURFACES
CORRESPONDING TO LOCATION OF TIP GAGES

TIP GAGE	R/Ro	SUCTION FACE BLADE SURFACE COORDINATES				PRESSURE FACE BLADE SURFACE COORDINATES			
		θ°	X	Y	Z	θ°	X	Y	Z
1	.95	-0.988	7.344	91.642	-1.581	-0.476	4.396	91.653	-0.762
	.90	-1.076	7.529	86.817	-1.631	-0.616	5.015	86.825	-0.934
2	.95	-7.191	4.853	90.935	-11.473	-6.613	1.528	91.046	-10.556
	.90	-7.460	4.126	86.094	-11.273	-7.023	1.751	86.180	-10.617
3	.95	-13.272	1.660	89.208	-21.041	-12.795	-1.086	89.380	-20.298
	.90	-13.754	0.192	84.340	-20.644	-13.452	-1.447	84.450	-20.200

DEPARTMENT OF THE NAVY
NAVAL SEA SYSTEMS COMMAND

PROPELLER BLADE
GAGE DATA
(LPD-17 CLASS)

DRAWING NO. 112551003

SIZE	FSCM NO	NAVSEA DRAWING NO.	REV
E	43689	245 7622724	C

SCALE: NONE | EST WT: NOT APPLICABLE | SHEET 8 OF 8

DWG NO 245-7622724 SHT 8

P1-F1