SPECIAL PACKAGING INSTRUCTION

CODE ID	SPI NO (TPO)
98748	F 01-373-9078
	SHEET 1 OF 3

PART OR DRAWING NO.	NATIONAL STOCK NO.	CURR REV	
DAA3283P001-401	4320-01-373-9078 FW	NEW	ILL P. BROWNING
ITEM NOMENCLATURE		ORIG DATE	PS M. O'NEAL
EGW PUMP PACKAGE		13128	CHK H. HOLINSWORTH
			AUTH C. TROTTER

PRESERVATION IAW MIL-STD-2073

SERVICEABLE METHOD: 42
UNSERVICEABLE METHOD: 10

QUP 001

ICQ N/A

CLEANING & DRYING IAW MIL-STD-2073

PRESERVATIVE N/A

MARKING IAW MIL-STD-129

SPECIAL MARKINGS:

A) SPI NO. F 01-373-9078
B) REUSABLE CONTAINER AND DUNNAGE DO NOT DESTROY.
C) NOT FOR OUTSIDE STORAGE.
D) HARDNESS CRITICAL ITEM (HCI)

CLOSURE

LEVEL A: N/A
LEVEL B: ASTM-D-1974

PACKING AS SPECIFIED BELOW AND BILL OF MATERIALS

LEVEL	SPEC	STYLE	TYPE	CL	VRTY	GR	TR
A	N/A	N/A	N/A	N/A	N/A	N/A	N/A
B	ASTM-D-5118	RSC	CF	WR	SW	V3C	N/A

	LEVEL A	LEVEL B
GROSS CU FT	N/A	4.769
GROSS WT LBS	N/A	41
DESIGN FRAGILITY G	N/A	N/A

CNTNR I.D.	LENGTH	WIDTH	DEPTH
LEVEL A:	N/A	N/A	N/A
LEVEL B:	22 1/2	22 1/2	15

CNTNR O.D.	LENGTH	WIDTH	DEPTH
LEVEL A:	N/A	N/A	N/A
LEVEL B:	22 7/8	22 7/8	15 3/4

ITEM DIM	14	12	7 3/4
ITEM WT LBS	24 LBS.		

REVISIONS		
LTR	DESCRIPTION	DATE
	NEW	13128

PART NO.	QTY.	NOMENCLATURE OR DESCRIPTION	SIZE (INCHES UNLESS SPECIFIED) TOLERANCES ON FRAC. ± 1/8, DECIMAL ± .10, ANGLES ± 1°.	MATERIAL SPECIFICATION
11	1	BARRIER BAG	77 X 43	MIL-PRF-131
10	1	WRAP	17 X 17	MIL-PRF-121 ▷2
9	4	CARRIAGE BOLT W/WASHER, LW & NUT	1/4 X 1 1/2	ASME/ANSI B18.5
8	2	BASE ASSEMBLY	17 7/8 X 5 1/2 X 3/8	A-A-55057 SEE DETAIL "B"
7	1	BASE ASSEMBLY	17 7/8 X 17 7/8 X 1/2	A-A-55057 SEE DETAIL "B"
6	1	LINER	71 1/8 X 8 3/4 X 5/16	ASTM-D-4727, DOM, CF, DW, SEE DETAIL "A"
5	2	TOP & BOTTOM PAD	17 3/4 X 17 3/4	ASTM-D-4727, DOM, CF, SW
4	1	CARTON I.D.	18 X 18 X 10	ASTM-D-5118, RSC, CF, DOM, SW
3	2	TOP & BOTTOM PAD	22 1/2 X 22 1/2 X 2	MIL-PRF-26514
2	4	SIDE PAD	20 1/2 X 11 X 2	MIL-PRF-26514
1	1	CONTAINER I.D.	22 1/2 X 22 1/2 X 15	SEE LEVEL OF PACK

NOTES:

1) CAP AND PLUG IAW NAS847.
2) PLACE WRAP, P/N (10) BETWEEN ITEM AND BASE ASSEMBLY P/N'S (7) & (8).

SPI NO. F 00-373-9078

SPECIAL PACKAGING INSTRUCTION	CODE ID 98748	SPI NO (TPO) F 01-373-9078
ITEM NOMENCLATURE EGW PUMP PACKAGE		SHEET 2 OF 3

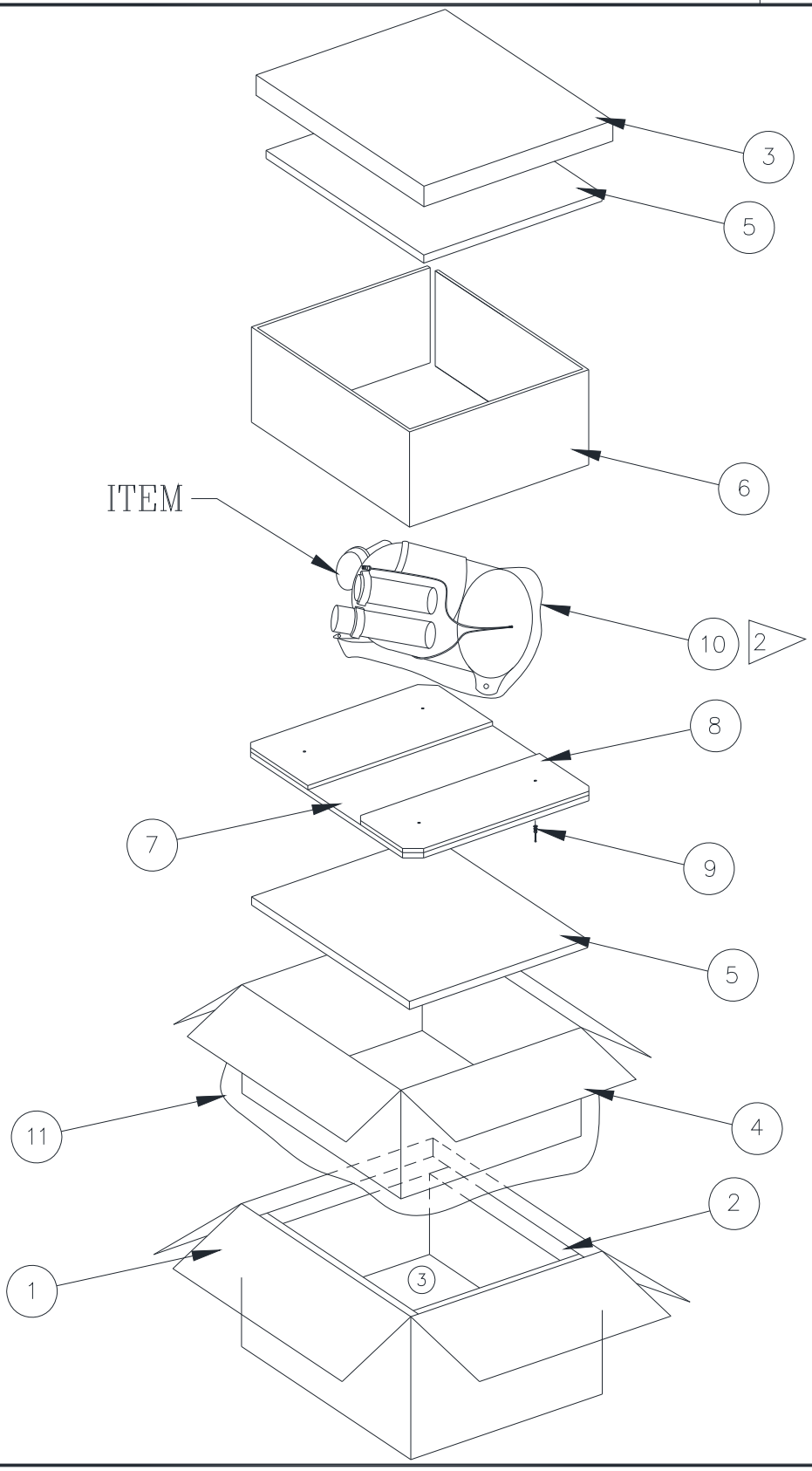

DD form MAR 87 2169 MOD

COMPUTER GENERATED

SPECIAL PACKAGING INSTRUCTION	CODE ID 98748	SPI NO (TPO) F 01-373-9078
ITEM NOMENCLATURE EGW PUMP PACKAGE		SHEET 3 OF 3

DETAIL "A" (6)
LINER

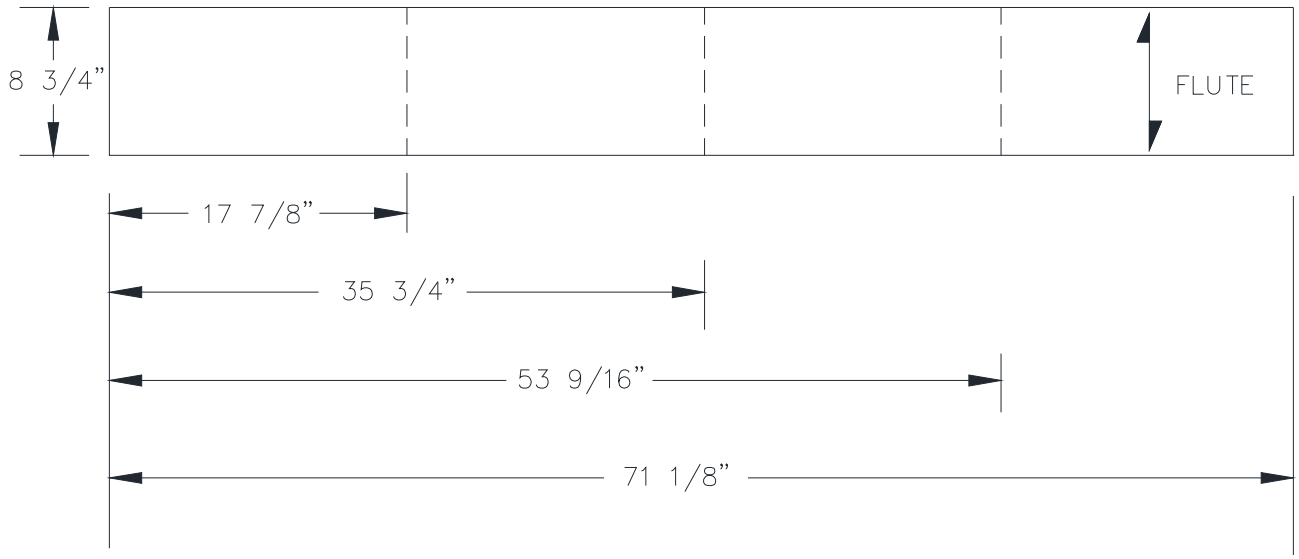
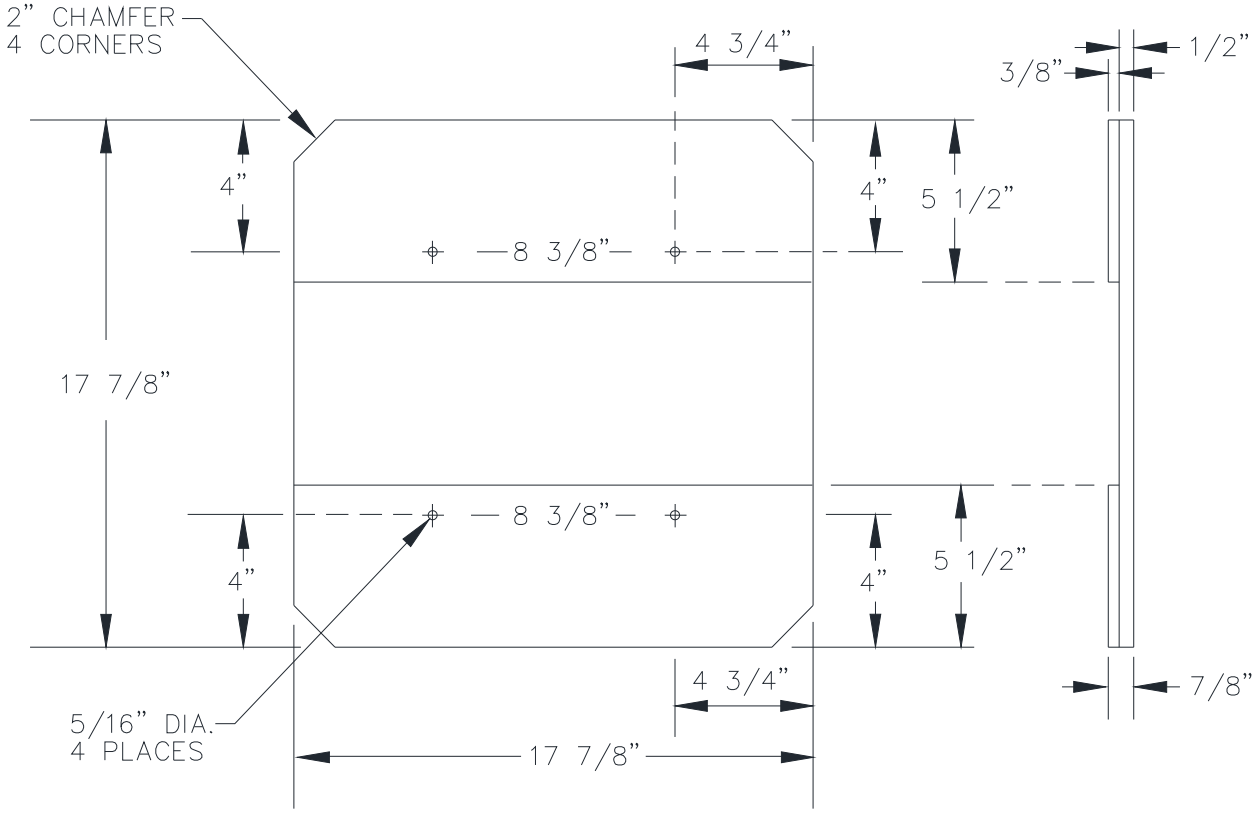
DETAIL "B" (7)(8)
BASE ASSEMBLY