SOW SR Alignment System 3 wkpkgs

Release Date : 2026-06-03

Document Number: AL-1920-2538 **Revision: A**

Document Status: RELEASED
Document Type: NOTE
Category Code: AL7526

Officially Released To the LBNL Document Control Center
Released: June 3rd, 2026 DCC Auth Key: P6HGCMIEOG

Downloaded by: Martha Gamarano Grausz at June 08, 2026 09:52:39

Table of Contents

Approvals 3
Abbreviations and Acronyms 4
1 Introduction 5
1.1 Project overview 5
1.2 Description of items 5
2 Scope of Work 7
2.1 Work required for each Work Package 7
3 Deliverables 8
3.1 Components specification and sourcing 13
3.2 Quality assurance (QA) documentation package 14
3.3 Kitting 14
3.4 Storage and controlled materials release option 14
4 Project Administration 15
4.1 Roles and responsibilities 15
4.2 Reporting/communication requirements 15
4.3 Document management 16
4.4 Reviews and approvals 16
5 Packaging, Storage, and Shipping Requirements 17
5.1 Packaging 18
6 Quality Assurance 18
6.1 QA Reporting requirements 19
6.1.1 Deviation requests 19
6.1.2 Non-conformance reports 19
6.2 Certificates of Conformance 19
6.3 Inspection requirements 20
6.3.1 Work package 1 20
6.3.2 Work package 2 20
6.3.3 Work package 3 20
6.4 Acceptance criteria 21
7 Applicable Documents 21

Officially Released To the LBNL Document Control Center
Released: June 3rd, 2026 DCC Auth Key: P6HGCMIEOG

BERKELEY LAB

Advanced Light Source
Lawrence Berkeley National Laboratory
All officially released LBNL documents are watermarked and contain LBNL Document Control Center release information in the lower-left corner of the document's pages
Printed hard copies of this document are for reference only.

ALS-U ADVANCED LIGHT SOURCE

Downloaded by: Martha Gamarano Grausz at June 08, 2026 09:52:39

Revision History

Rev.	CM Number	Description of Change
A		Baseline

Approvals

The following individual(s) shall review this document:

Reviewer	Project Role
The following individual(s) reviewed this document: **Reviewed by:** JIANINIU,DVMUNSON,SERENITYNGUYEN	

The following individual(s) shall approve this document:

Approver	Project Role
The following individual(s) approved this document: **Approved by:** ESPINODEVINE	

LBNL Document Control Center

Officially Released To the LBNL Document Control Center
Released: June 3rd, 2026 DCC Auth Key: P6HGCMIEOG

Downloaded by: Martha Gamarano Grausz at June 08, 2026 09:52:39

Abbreviations and Acronyms

ACL	Acceptance Criteria List
ALS	Advanced Light Source
ALS-U	Advanced Light Source Upgrade
ANSI	American National Standards Institute
ARO	After Receipt of Order
BOM	Bill of Materials
CoC	Certificate of Conformance
COTS	Commercial, Off the Shelf
DR	Deviation Request
GD&T	Geometric Dimensioning and Tolerancing
HW	Hardware
ISO	International Standards Organization
kN	Kilo-Newtons
LBNL*	Lawrence Berkeley National Laboratory
mm	Millimeters
NCR	Non-Conformance Report
NTP	Notice to Proceed
QA	Quality Assurance
QC	Quality Control
QTY	Quantity
RFP	Request for Proposal
SKU	Stock Keeping Unit
SOW	Statement of Work
SR	Storage Ring
University*	The Regents of the University of California
WP	Work Package

*For the purposes of this SOW, the terms University and LBNL are used interchangeably.

Officially Released To the LBNL Document Control Center
Released: June 3rd, 2026 DCC Auth Key: P6HGCMIEOG

Downloaded by: Martha Gamarano Grausz at June 08, 2026 09:52:39

1 INTRODUCTION

1.1 Project overview

Lawrence Berkeley National Laboratory's (LBNL's) Advanced Light Source (ALS) is an electron storage ring-based synchrotron radiation facility that generates extremely bright beams of light – ranging from infrared through X-rays – that are used to conduct basic, applied, and industrial research.

The current ALS Upgrade Project (ALS-U) will, among other things, replace the existing ALS storage ring with a new next generation multi-bend achromat-type storage ring capable of achieving soft X-rays at least 100 times brighter than currently, while leveraging the existing beamlines and infrastructure of the ALS facility.

1.2 Description of items

This statement of work (SOW) outlines the requirements for the supply and delivery of fabricated components required for the alignment system kits that are installed between the Storage Ring support plinths and the rafts.

The alignment system is a critical subsystem designed to allow final adjustment and alignment for the Storage Ring. There are three work packages that are part of this SOW. Work package 1 is a series of kits where a kit is defined in the bill of materials (BOM) document AL-1889-5173 and is composed of both fabricated and commercial parts. The kit BOM contains all of the alignment components required for one raft/plinth assembly. The storage ring is composed of 48 raft/plinth assemblies.

Document Control Center

Officially Released To the LBNL Document Control Center
Released: June 3rd, 2026 DCC Auth Key: P6HGCMIEOG

BERKELEY LAB

Advanced Light Source
Lawrence Berkeley National Laboratory
All officially released LBNL documents are watermarked and contain LBNL Document Control Center release information in the lower-left corner of the document's pages
Printed hard copies of this document are for reference only.

ALS-U ADVANCED LIGHT SOURCE

Downloaded by: Martha Gamarano Grausz at June 08, 2026 09:52:39

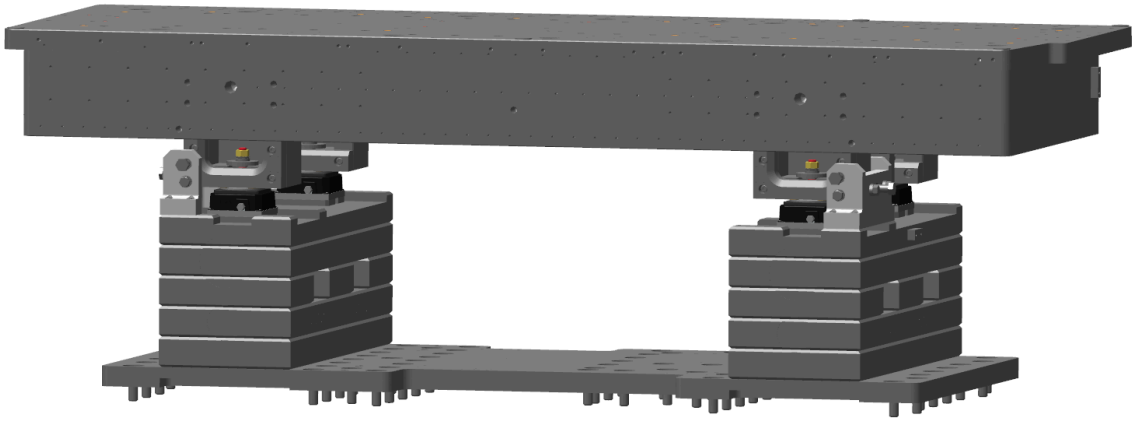

Figure 1 - SR Raft to Plinth assembly with the alignment system.

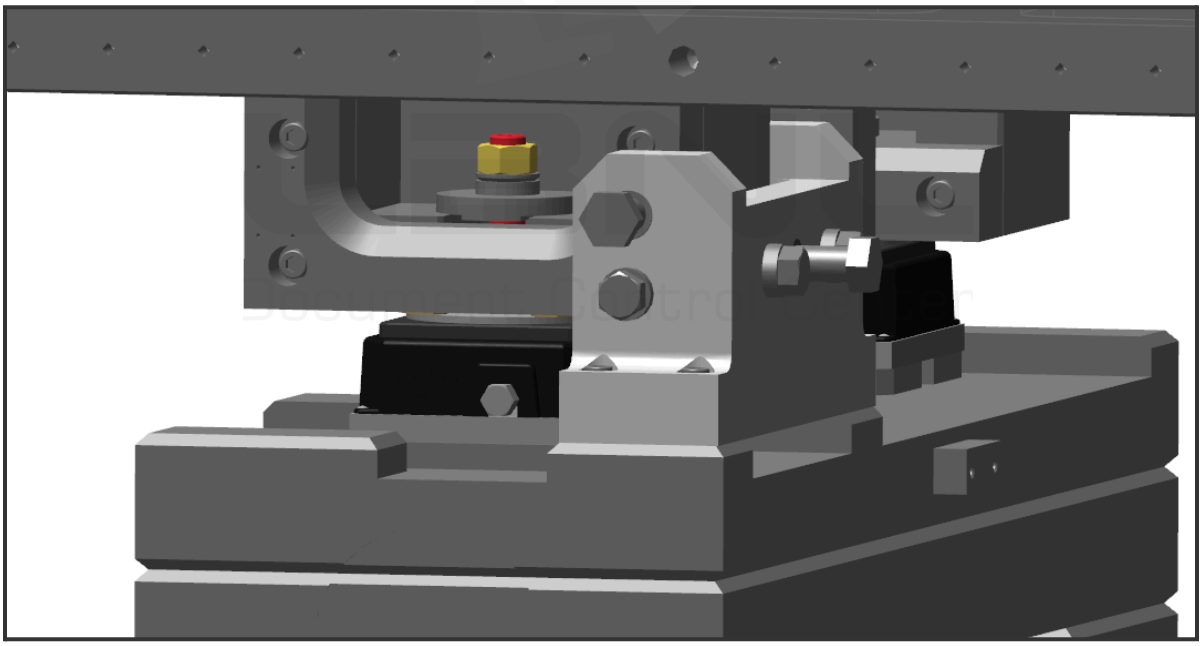

Figure 2 - Detail of alignment system area

Officially Released To the LBNL Document Control Center
Released: June 3rd, 2026 DCC Auth Key: P6HGCMIEOG

BERKELEY LAB

Advanced Light Source
Lawrence Berkeley National Laboratory
All officially released LBNL documents are watermarked and contain LBNL Document Control Center release information in the lower-left corner of the document's pages
Printed hard copies of this document are for reference only.

ALS-U ADVANCED LIGHT SOURCE

Downloaded by: Martha Gamarano Grausz at June 08, 2026 09:52:39

2 SCOPE OF WORK

The work is to be completed as specified in this SOW and the applicable documentation, listed in Table 7-1 Applicable documents list. All work packages are required to adhere to all sections of this SOW, unless specifically noted. Exceptions or exclusions from the documented requirements require prior written approval from LBNL before modifications are made.

The scope of work includes three work packages:

Work package 1

The fabrication, procurement, quality management, and documentation, and the kitting of the alignment components that are required for the assembly of the raft to the plinth. Spare quantities are included as an option that may be exercised at LBNL's discretion. Machined components, those starting with an "AL" in this work package are to be serialized per EG-1002-1955 and SAE AS478-15B2 with the drawing number, revision letter and part serial number where the serial number is sequentially -000x following the drawing number, e.g. AL-1828-2901-000x. Spare quantities are included as an option that may be exercised at LBNL's discretion.

Work package 2

The fabrication, quality management, and packaging of the alignment shims that are required for the assembly of the raft to the plinth. Spare quantities are included as an option that may be exercised at LBNL's discretion.

Work package 3

The procurement and quality acceptance of brand name or equal to 515-KSKC Airloc™ load levelers. Spare quantities are included as an option that may be exercised at LBNL's discretion.

2.1 Work required for each Work Package

1. Fabricate, inspect, and fully document any nonconformances of all LBNL drawings. Fabricated parts are indicated by LBNL part numbers that start with an "AL".
2. If applicable for the work package, procure the specified off-the-shelf components listed in the BOM. Material certifications and certificates of

Officially Released To the LBNL Document Control Center
Released: June 3rd, 2026 DCC Auth Key: P6HGCMIEOG

Downloaded by: Martha Gamarano Grausz at June 08, 2026 09:52:39

conformance are required for all commercial components. LBNL identifies commercial components with an "HW" prefix. All procured components are also identified by a commercial part number in the BOM.

3. Packaging that must ensure safe transport and storage for first articles and subsequent batches.
4. Label packaging to ensure clear identification and traceability.
5. Delivery of components in complete, identifiable kits according to the delivery schedule issued by LBNL.
6. Provide Quality Assurance (QA) documentation of delivered items, including Certificate of Conformance, packing lists, and batch verification.

3 Deliverables

This section describes the deliverables required for this scope of work. The deliverables must be shipped to LBNL per an LBNL-approved schedule.

Table 1 - Work package definition and deliverables

Work Package	Part number	Description	First Article or Batch No.	Quantity	Delivery Due Dates
1	AL-1889-5173	SR Alignment BOM – First Article Kit	First Article	4	8/15/2026
	AL-1889-5173	SR Alignment BOM – Production Kit	Batch 1	10	9/3/2026
	AL-1889-5173	SR Alignment BOM – Production Kit	Batch 2	10	10/19/2026
	AL-1889-5173	SR Alignment BOM – Production Kit	Batch 3	10	12/3/2026
	AL-1889-5173	SR Alignment BOM – Production Kit	Batch 4	10	1/27/2027

Officially Released To the LBNL Document Control Center
Released: June 3rd, 2026 DCC Auth Key: P6HGCMIEOG

BERKELEY LAB

Advanced Light Source
Lawrence Berkeley National Laboratory
All officially released LBNL documents are watermarked and contain LBNL Document Control Center release information in the lower-left corner of the document's pages
Printed hard copies of this document are for reference only.

ALS-U ADVANCED LIGHT SOURCE

Downloaded by: Martha Gamarano Grausz at June 08, 2026 09:52:39

Work Package	Part number	Description	First Article or Batch No.	Quantity	Delivery Due Dates
1	AL-1889-5173	Optional spares	Option 1.1	3	1/27/2027
	AL-1889-5173	Optional spares	Option 1.2	3	1/27/2027
2	AL-1472-5177-01	Load leveler shim type 01	First Articles	50	8/3/2026
	AL-1472-5177-02	Load leveler shim type 02		50	8/3/2026
	AL-1472-5177-03	Load leveler shim type 03		50	8/3/2026
	AL-1472-5177-04	Load leveler shim type 04		50	8/3/2026
	AL-1472-5177-05	Load leveler shim type 05		50	8/3/2026
	AL-1472-5177-01	Load leveler shim type 01	Batch 1	125	9/3/2026
	AL-1472-5177-02	Load leveler shim type 02		125	9/3/2026
	AL-1472-5177-03	Load leveler shim type 03		125	9/3/2026
	AL-1472-5177-04	Load leveler shim type 04		125	9/3/2026
	AL-1472-5177-05	Load leveler shim type 05		125	9/3/2026

Officially Released To the LBNL Document Control Center
Released: June 3rd, 2026 DCC Auth Key: P6HGCMIEOG

BERKELEY LAB

Advanced Light Source
Lawrence Berkeley National Laboratory
All officially released LBNL documents are watermarked and contain LBNL Document Control Center release information in the lower-left corner of the document's pages
Printed hard copies of this document are for reference only.

ALS-U ADVANCED LIGHT SOURCE

Downloaded by: Martha Gamarano Grausz at June 08, 2026 09:52:39

Work Package	Part number	Description	First Article or Batch No.	Quantity	Delivery Due Dates
2	AL-1472-5177-01	Load leveler shim type 01	Batch 2	125	9/19/2026
	AL-1472-5177-02	Load leveler shim type 02		125	9/19/2026
	AL-1472-5177-03	Load leveler shim type 03		125	9/19/2026
	AL-1472-5177-04	Load leveler shim type 04		125	9/19/2026
	AL-1472-5177-05	Load leveler shim type 05		125	9/19/2026
	AL-1472-5177-01	Load leveler shim type 01	Batch 3	100	10/3/2026
	AL-1472-5177-02	Load leveler shim type 02		100	10/3/2026
	AL-1472-5177-03	Load leveler shim type 03		100	10/3/2026
	AL-1472-5177-04	Load leveler shim type 04		100	10/3/2026
	AL-1472-5177-05	Load leveler shim type 05		100	10/3/2026
	AL-1472-5177-01	Load leveler shim type 01	Batch 4	100	11/27/2026
	AL-1472-5177-02	Load leveler shim type 02		100	11/27/2026

Officially Released To the LBNL Document Control Center
Released: June 3rd, 2026 DCC Auth Key: P6HGCMIEOG

BERKELEY LAB

Advanced Light Source
Lawrence Berkeley National Laboratory
All officially released LBNL documents are watermarked and contain LBNL Document Control Center release information in the lower-left corner of the document's pages
Printed hard copies of this document are for reference only.

ALS-U ADVANCED LIGHT SOURCE

Downloaded by: Martha Gamarano Grausz at June 08, 2026 09:52:39

Work Package	Part number	Description	First Article or Batch No.	Quantity	Delivery Due Dates
2	AL-1472-5177-03	Load leveler shim type 03		100	11/27/2026
	AL-1472-5177-04	Load leveler shim type 04		100	11/27/2026
	AL-1472-5177-05	Load leveler shim type 05		100	11/27/2026
	AL-1472-5177-01	Load leveler shim type 01 - optional spares	Option 2.1	25	11/27/2026
	AL-1472-5177-02	Load leveler shim type 02 - optional spares		25	11/27/2026
	AL-1472-5177-03	Load leveler shim type 03 - optional spares		25	11/27/2026
	AL-1472-5177-04	Load leveler shim type 04 - optional spares		25	11/27/2026
	AL-1472-5177-05	Load leveler shim type 05 - optional spares		25	11/27/2026
	AL-1472-5177-01	Load leveler shim type 01 - optional spares	Option 2.2	25	11/27/2026
	AL-1472-5177-02	Load leveler shim type 02 - optional spares		25	11/27/2026
	AL-1472-5177-03	Load leveler shim type 03 - optional spares		25	11/27/2026
	AL-1472-5177-04	Load leveler shim type 04 - optional spares		25	11/27/2026

Officially Released To the LBNL Document Control Center
Released: June 3rd, 2026 DCC Auth Key: P6HGCMEOG

BERKELEY LAB

Advanced Light Source
Lawrence Berkeley National Laboratory
All officially released LBNL documents are watermarked and contain LBNL Document Control Center release information in the lower-left corner of the document's pages
Printed hard copies of this document are for reference only.

ALS-U ADVANCED LIGHT SOURCE

Downloaded by: Martha Gamarano Grausz at June 08, 2026 09:52:39

Work Package	Part number	Description	First Article or Batch No.	Quantity	Delivery Due Dates
2	AL-1472-5177-05	Load leveler shim type 05 - optional spares	Option 2.2	25	11/27/2026
3 * See Note	Airloc™ 515-KSKC	Airloc™ load leveler	First Article	10	8/3/2026
	Airloc™ 515-KSKC	Airloc™ load leveler	Batch 1	55	9/3/2026
	Airloc™ 515-KSKC	Airloc™ load leveler	Batch 2	55	9/19/2026
	Airloc™ 515-KSKC	Airloc™ load leveler	Batch 3	55	10/3/2026
	Airloc™ 515-KSKC	Airloc™ load leveler	Batch 4	55	11/27/2026
	Airloc™ 515-KSKC	Optional spares	Option 3.1	5	11/27/2026

Document Control Center

Officially Released To the LBNL Document Control Center
Released: June 3rd, 2026 DCC Auth Key: P6HGCMIEOG

BERKELEY LAB

Advanced Light Source
Lawrence Berkeley National Laboratory
All officially released LBNL documents are watermarked and contain LBNL Document Control Center release information in the lower-left corner of the document's pages
Printed hard copies of this document are for reference only.

ALS-U ADVANCED LIGHT SOURCE

Downloaded by: Martha Gamarano Grausz at June 08, 2026 09:52:39

*Note: Substitutions for the Airloc™ 515-KSKC may be proposed however the following requirements must be satisfied in full.

Table 2 - Load leveler requirements

Item #	Description	Requirement
1	Rigid clamping – Static load	150 kN per unit
2	Rigid clamping – Dynamic load	250 kN per unit
3	Single unit weight	≤ 6.4 kg
4	Integrated spherical seat	Accommodate an incline of 3 degrees without slipping or losing load concentration
5	Ultra-low adjusting torque under full load	≤ 73 Nm
6	Compact size	Max footprint 160 mm long x 140 mm wide x 69 mm tall
7	Leveling range minimum	± 5 mm
8	Micrometer tuning under full operational load Minimum	± 0.15 mm per 360 rotation of adjustment key
9	Precision stability	≤ 0.01 mm accuracy across a temperature range of -20 °C to +100 °C
10	Commercially available	Lead time ≤ 16 weeks

3.1 Components specification and sourcing

1. All required COTS components, descriptions, and quantities are defined in this statement of work and the documents listed in Table 7-1 Applicable documents list
2. All parts supplied must be new and unused.
3. Equivalent component substitutes may be acceptable; however, any proposed substitution must receive written technical approval from LBNL prior to procurement.

Officially Released To the LBNL Document Control Center
Released: June 3rd, 2026 DCC Auth Key: P6HGCMIEOG

BERKELEY LAB

Advanced Light Source
Lawrence Berkeley National Laboratory
All officially released LBNL documents are watermarked and contain LBNL Document Control Center release information in the lower-left corner of the document's pages
Printed hard copies of this document are for reference only.

ALS-U ADVANCED LIGHT SOURCE

Downloaded by: Martha Gamarano Grausz at June 08, 2026 09:52:39

3.2 Quality assurance (QA) documentation package

A documentation package shall be provided prior to each batch shipment to verify component quality and configuration. The QA documentation requirements are detailed in Section 6 Quality Assurance.

The required quality deliverables include:

1. Complete packing lists including part and/or serial numbers of all components in the package
2. Material certification documentation for all fabricated components
3. Certificates of conformance
4. Inspection reports or other documentation
5. Kit configuration reference list
6. Any other applicable documents as requested in writing

3.3 Kitting

Kitting involves the grouping, labeling, and protective packaging of the components into sets. The production kitting plan and labeling methodology require approval by LBNL prior to implementation. Kitting is only required for **Work Package 1**.

1. Each completed kit must be sealed in a bag and labeled on the exterior with its unique kit ID number. Kit ID numbers are the BOM list number followed by a sequential dash, e.g. AL-1889-5173-001, -002, -003, etc. A packing list of every part number and quantity contained within the kit shall be included in the package.
2. Small components must be bagged separately within the kit to prevent loss or damage from other components.
3. A quality verification process is required for all kits with independent verification of the kit contents (part numbers and count) before the kit is sealed and signed off by a QC verifier.

3.4 Storage and controlled materials release option

The Subcontractor may propose to provide storage and controlled release of completed deliverables to support LBNL's schedule. A proposal for this option must address the following:

Officially Released To the LBNL Document Control Center
Released: June 3rd, 2026 DCC Auth Key: P6HGCMIEOG

Downloaded by: Martha Gamarano Grausz at June 08, 2026 09:52:39

1. A secure, environmentally controlled storage facility that maintains product cleanliness and prevents damage of the completed and inspected components. The proposal must specify the cost for a defined period (e.g. per month).
2. Details of the inventory control system to be used, which must provide real-time status and traceability for all stored items. This system and its reporting format are subject to LBNL approval.
3. A description of the process for managing the release and shipment of components
4. Until the materials are physically delivered to and signed for at the LBNL, the risk of loss remains with the subcontractor. The subcontractor must maintain adequate insurance coverage for the full replacement value of the stored inventory against fire, theft, or natural disaster.

4 Project Administration

4.1 Roles and responsibilities

The subcontract will name two University specialists to oversee the contractual and technical aspects of the procurement:

1. The University Procurement Specialist is responsible for the full subcontract lifecycle from solicitation to subcontract award, administration and any contractual issues that arise thereafter.
2. The University Technical Representative is responsible for the technical aspects of subcontract , beginning with the subcontract award through receipt and acceptance of deliverables.

The Subcontractor must identify a project manager who will act as the single point of contact for the University representatives. The project manager must be available for the duration of the subcontract to resolve issues and provide technical, programmatic, and schedule updates.

4.2 Reporting/communication requirements

1. Upon award of the subcontract, the University Technical Representative will contact the Subcontractor to set up a project kick-off meeting to establish

Officially Released To the LBNL Document Control Center
Released: June 3rd, 2026 DCC Auth Key: P6HGCMIEOG

Downloaded by: Martha Gamarano Grausz at June 08, 2026 09:52:39

communication requirements, including the use of the portal for project data exchange.

2. Project meetings are required to be held twice per month, but the frequency may be higher during the period leading up to production.
3. Written monthly schedule updates are required, to be delivered on or before the 10th of every month. The schedule must include lead times for components and materials, high-level production sequences of key components, and planned dates for shipments to LBNL.
4. Written monthly status reports are required and must include an explanation for schedule changes as well as a list of completed quantities of key components throughout the production sequence. Monthly status reports are on or before the 10th of every month.
5. Site visits by LBNL personnel (or designee) are at LBNL's discretion upon providing advance notice. If a visit is scheduled, access to the factory where the manufacturing and assembly work for the contracted items is performed is required.
6. Action item tracking is required. The Subcontractor must document action items in written form for all project meetings.
7. Other reports or data may be required as requested in writing.

4.3 Document management

Upon award of the subcontract, LBNL will establish a Windchill project portal to be used by the Subcontractor to both gain access to applicable documents and submit – in electronic format – all documentation required in this SOW, including quality assurance (QA) data, certificates of conformance, inspection results, and drawings, as applicable.

Acceptable document formats include .docx, .xlsx, and other editable Microsoft Office file formats, pdf format, image formats, and .txt or .csv for measurement data, as applicable.

4.4 Reviews and approvals

The University Technical Representative will coordinate all required reviews, which may be conducted at either facility, remotely, or via document submission. LBNL reserves

Officially Released To the LBNL Document Control Center
Released: June 3rd, 2026 DCC Auth Key: P6HGCMIEOG

Downloaded by: Martha Gamarano Grausz at June 08, 2026 09:52:39

the right to include external reviewers and implement additional review types as needed.

The review types required for this scope of work are:

1. **Manufacturing readiness review – Work package 1 and 2 only**

   The manufacturing readiness review is intended to demonstrate that the manufacturing setup is robust enough to proceed. Prior to the bulk purchase and production of components the selected supplier will provide a manufacturing plan or review by LBNL. The manufacturing plan shall include the following components at a minimum:

   a. A fully integrated schedule detailing the purchase of commercial components and fabrication timelines.
   b. Identification of any tooling or special equipment required for the production of the alignment kits.
   c. A complete quality plan that will ensure compliance with the requirements detailed in this Statement of Work
   d. A kit packaging, labeling, and shipping plan

2. **Pre-shipment documentation review**

   Prior to each shipment, the Subcontractor must submit the corresponding QA documentation package for LBNL review and acceptance. Shipment is not authorized until this documentation is approved in writing.

Additional review types may be implemented at LBNL's discretion at any time during the subcontract's period of performance.

5 PACKAGING, STORAGE, AND SHIPPING REQUIREMENTS

The Subcontractor is responsible for ensuring that all items arrive at LBNL clean, undamaged, and traceable. Each shipment must include a checklist confirming that all pre-shipment and packaging requirements as addressed in Sections 3, 4, and 6 have been met. No item may be shipped before a written approval is issued by LBNL (per Section 4.3).

Officially Released To the LBNL Document Control Center
Released: June 3rd, 2026 DCC Auth Key: P6HGCMIEOG

BERKELEY LAB

Advanced Light Source
Lawrence Berkeley National Laboratory
All officially released LBNL documents are watermarked and contain LBNL Document Control Center release information in the lower-left corner of the document's pages
Printed hard copies of this document are for reference only.

ALS-U ADVANCED LIGHT SOURCE

Downloaded by: Martha Gamarano Grausz at June 08, 2026 09:52:39

5.1 Packaging

The following requirements must be observed for packaging component kits prior to shipping:

1. Cleanliness: All components must be clean, dry, and free of debris and fluids.
2. Protective packaging: enclosed in moisture-barrier bags
3. Palletization and weight limitations: Containers over 50 lbs. must be on a pallet supporting the entire load and allowing access from two opposing sides by a standard forklift or pallet jack
4. A packing slip must accompany each shipment, detailing:
    a. Part number and quantities of components contained;
    b. LBNL purchase order (PO) number;
    c. Delivery batch number; and
    d. Package number and total count (e.g. "Box 3 of 5").
5. Shipment labelling: The outer container must be clearly labeled for identification and handling, including:
    a. Delivery address;
    b. University Technical Representative contact information;
    c. Part number of the contained components;
    d. Subcontract (Purchase Order) number; and
    e. Orientation and handling symbols, as applicable.
6. The subcontractor must provide the LBNL technical representative with the tracking number for each shipment to facilitate LBNL logistics coordination.

6 Quality Assurance

Subcontractors must complete the ALS-U Supplier Quality Evaluation Survey (AL-1208-0209, Table 7-1) to outline their QA process.

Once a subcontract is awarded, the QA program submitted and found acceptable must be maintained throughout the project. LBNL may ask for further details about the QA

Officially Released To the LBNL Document Control Center
Released: June 3rd, 2026 DCC Auth Key: P6HGCMIEOG

Downloaded by: Martha Gamarano Grausz at June 08, 2026 09:52:39

program at any time, and reasonable updates or changes may be required. Post-award surveys may also be conducted and must be supported by the Subcontractor.

6.1 QA Reporting requirements

6.1.1 Deviation requests

To propose a change to any process, document, or drawing, the Subcontractor must submit a Deviation Request (DR) and receive written approval from LBNL *before* implementing the change. The DR format must be provided by or pre-approved by LBNL.

This process is for proposed changes only; non-conforming items must be addressed via a Non-conformance Report (Section 6.2.2).

6.1.2 Non-conformance reports

Upon discovery of a non-conformance by either party, the Subcontractor must submit a non-conformance report (NCR) to LBNL within three (3) business days. The NCR format must be provided by or pre-approved by LBNL.

Following submission, LBNL will provide a written disposition. All work on the non-conforming item or any process found to be producing non-conforming parts must stop immediately. Work shall not resume without LBNL's written approval.

6.2 Certificates of Conformance

Certificates of Conformance (CoC) are a major QA deliverable and are required for all COTS components supplied under this SOW.

1. A copy of the CoC must be provided with each shipment.
2. The document must certify that the parts meet the manufacturer's datasheet specifications and explicitly trace back to the original authorized distributor or manufacturer. This requirement is necessary to prevent the infiltration of counterfeit components.
3. The CoC must include the component's lot number(s) or date code(s). These markings must physically match the labeling on the components enclosed in the corresponding shipment.
4. The CoC should include the LBNL purchase order (PO) number for traceability purposes.

Officially Released To the LBNL Document Control Center
Released: June 3rd, 2026 DCC Auth Key: P6HGCMIEOG

Downloaded by: Martha Gamarano Grausz at June 08, 2026 09:52:39

5. Certificates must be provided as either digital copies via the Windchill portal (preferred) or as physical copies enclosed within the shipping box.

6.3 Inspection requirements

6.3.1 Work package 1

1. The first article batch of kit components is required to have 100% inspection of all fabricated components. Subsequent batches are required to have 10% or one complete kit inspected in full.
2. Data sheets and/or measurement reports are a required QA deliverable for each inspection.
3. Inspections shall include 100% inspection of all critical dimensions. Critical dimensions are noted on LBNL drawings as (XXX) Refer to drawing package AL-1919-9625 for the critical dimensions for the parts.
4. All features with basic dimensions and all GD&T noted features shall be 100% inspected per the sampling rate noted above.

6.3.2 Work package 2

1. Caliper or similar hand tool inspection of all dimensions is required for 10% of the first articles. Refer to drawing package AL-1919-9625 for the critical dimensions for the shim parts (last drawing).
2. Subsequent batches are required to have a 5% inspection rate. A qualified template may be used for the production profile checks. Thickness verification is required.
3. Measurement or acceptance reports are a required QA deliverable for each shipment.

6.3.3 Work package 3

1. Documented and demonstrated functional performance is required for a minimum of 10% of components.
2. Documented visual inspection of packaging and hardware of all components is required.

Officially Released To the LBNL Document Control Center
Released: June 3rd, 2026 DCC Auth Key: P6HGCMIEOG

BERKELEY LAB

Advanced Light Source
Lawrence Berkeley National Laboratory
All officially released LBNL documents are watermarked and contain LBNL Document Control Center release information in the lower-left corner of the document's pages
Printed hard copies of this document are for reference only.

ALS-U ADVANCED LIGHT SOURCE

Downloaded by: Martha Gamarano Grausz at June 08, 2026 09:52:39

6.4 Acceptance criteria

The Notice to Proceed (NTP) to ship is contingent upon LBNL's receipt and approval of the following:

1. Completion of the pre-shipment documentation review.
2. Conformity with BOM specifications, quantities, and conditions.
3. All required QA documentation, including inspection documentation.
4. All applicable non-conformance or deviation documentation, if any.

Upon delivery, LBNL will perform a receiving inspection to verify all items meet the functional acceptance criteria list (ACL). The Subcontractor may request the applicable ACL. If this inspection reveals a previously undetected non-conformance for which the Subcontractor is responsible, the Subcontractor must rectify it.

7 Applicable Documents

This scope of work must be based on the officially released version of the documents listed in Table 7-1. All information contained therein is integral and valid to the fullest extent unless specifically noted within this SOW. Applicable documents must originate from the LBNL Document Control Center (DCC) and will be made available by LBNL as needed

Table 3 Applicable documents list

Document Number	Title
AL-1208-0209	ALS-U Supplier Quality Evaluation Survey
AL-1889-5173	SR Alignment System BOM
AL-1472-5177	Load leveler shim drawing
AL-1919-9625	Drawing package with critical dimensions for the parts.

Officially Released To the LBNL Document Control Center
Released: June 3rd, 2026 DCC Auth Key: P6HGCMIEOG

BERKELEY LAB

Advanced Light Source
Lawrence Berkeley National Laboratory
All officially released LBNL documents are watermarked and contain LBNL Document Control Center release information in the lower-left corner of the document's pages
Printed hard copies of this document are for reference only.

ALS-U ADVANCED LIGHT SOURCE

Downloaded by: Martha Gamarano Grausz at June 08, 2026 09:52:40